REVISION TRANSMITTAL SHEET

TO: HOLDERS OF COMPONENT MAINTENANCE MANUAL 25-41-51

Revision No. 74 dated Nov 27/2023 is attached and covers all components held by every operator.

DEFINITIONS

R = REVISION
N = NEW
D = DELETED

FILING INSTRUCTIONS

– Affected pages are listed on the "LIST OF EFFECTIVE PAGES".

– Make certain that the content of the manual is in compliance with the LIST OF EFFECTIVE PAGES.

– File the REVISION TRANSMITTAL SHEET independently.

– Replace issue Revision 73 with this complete issue Revision 74.

REASON FOR ISSUE

Corrections.

The attached HIGHLIGHTS details the changes.

DIEHL Aviation
DIEHL Aviation Hamburg GMBH
Hein-Sass-Weg 41
21129 Hamburg
Germany
www.diehl.com/aviation
CAGE CODE C5270

COMPONENT MAINTENANCE MANUAL WITH ILLUSTRATED PARTS LIST

LAVATORY A

D2547160900200
D2547160900400
D2547161903000
D2549010400000
D2549010400200
D2549010400400
D2549010400600
D2549010400800
D2549010401000
D2549010401400
D2549010401600
D2549010401800
D2549010402000
D2549010402200
D2549010402400
D2549010402600
D2549010402800
D2549010403000
D2549010403200
D2549010403400
D2549010403600
D2549010403800
D2549010404000
D2549010404200
D2549010404400
D2549010404600
D2549010404800
D2549010405000
D2549010405200
D2549010405400
D2549010405600
D2549010405800
D2549010406000
D2549010406200

INITIAL ISSUE: Mar 03/08

25-41-51

TP 1
REVISION No. 74
Nov 27/23

D2549010406400
D2549010406800
D2549010407000
D2549010500000
D2549010500400
D2549010500600
D2549010500800
D2549010501000
D2549010501200
D2549010501400
D2549010501600
D2549010501800
D2549010502000
D2549010502200
D2549010502400
D2549010502600
D2549010502800
D2549010503200
D2549010503400
D2549010503600
D2549010503800
D2549010504200
D2549010504400
D2549010504600
D2549010504800
D2549010505000
D2549010505200
D2549010505400
D2549010505600
D2549010505800
D2549010506000
D2549010506200
D2549010506400
D2549010506800
D2549010507000
D2549010507200
D2549010507400
D2549010507600
D2549010507800
D2549010508000
D2549010508200
D2549010508400
D2549010508600
D2549010508800
D2549010509000
D2549010509200
D2549010509400
D2549010509600
D2549010509800
D2549010510000
D2549010510200
D2549010510400
D2549010510600
D2549010510800
D2549010511000
D2549010511200
D2549010511400
D2549010511600

D2549010511800
D2549010512000
D2549010512200
D2549010512400
D2549010512600
D2549010513000
D2549010513200
D2549010513400
D2549010513600
D2549010513800
D2549010514000
D2549010514200
D2549010514400
D2549010514600
D2549010514800
D2549010600000
D2549010600200
D2549010600400
D2549010600600
D2549010600800
D2549010601000
D2549010601200
D2549010601400
D2549010601600
D2549010601800
D2549010602000
D2549010602200
D2549010602400
D2549010602600
D2549010602800
D2549010603000
D2549010603200
D2549010603400
D2549010603600
D2549010603800
D2549010604000
D2549010604200
D2549010604400
D2549010604600
D2549010604800
D2549010605000
D2549010605200
D2549010605600
D2549010605800
D2549010606000
D2549010606200
D2549010606400
D2549010606600
D2549010606800
D2549010607000
D2549010607200
D2549010607400
D2549010607600
D2549010607800
D2549010608200
D2549010608400
D2549010608600
D2549010608800

D2549010609000
D2549010609200
D2549010609400
D2549010609600
D2549010609800
D2549010610000
D2549010610200
D2549010610400
D2549010610600
D2549010610800
D2549010611000
D2549010611200
D2549010611400
D2549010611600
D2549010611800
D2549010612000
D2549010612200
D2549010612400
D2549010612600
D2549010613000
D2549010613200
D2549010613400
D2549010613600
D2549010613800
D2549010614200
D2549010614400
D2549010614600
D2549010614800
D2549020300000
D2549020300400
D2549020300600
D2549020300800
D2549020301000
D2549020301600
D2549020301800
D2549020302000
D2549020302800
D2549020400000
D2549020400200
D2549020400400
D2549020400600
D2549020400800
D2549020401000
D2549020401200
D2549020401400
D2549020401600
D2549020402000
D2549020402200
D2549020402400
D2549020402600
D2549020403000
D2549020403200
D2549020403400
D2549020403600
D2549020403800
D2549020404000
D2549020404200
D2549020404400

D2549020404600
D2549020404800
D2549020405000
D2549020405200
D2549020405400
D2549020405600
D2549020405800
D2549020406000
D2549020406200
D2549020406400
D2549020406600
D2549020406800
D2549020407000
D2549020407200
D2549020407400
D2549020407600
D2549020407800
D2549020408000
D2549020408200
D2549020408600
D2549020408800
D2549020409000
D2549020409200
D2549020409400
D2549020409600
D2549020409800
D2549020410200
D2549020410400
D2549020410600
D2549020410800
D2549020411000
D2549020411200
D2549020411400
D2549020411600
D2549020411800
D2549020412000
D2549020412200
D2549020412400
D2549020412600
D2549020412800
D2549020413000
D2549020413200
D2549020413400
D2549020413600
D2549020413800
D2549020414000
D2549020414200
D2549020414600
D2549020414800
D2549020500000
D2549020500200
D2549020500400
D2549020500600
D2549020500800
D2549020501000
D2549020501200
D2549020501400
D2549020501600

D2549020501800
D2549020502000
D2549020502200
D2549020502400
D2549020502600
D2549020502800
D2549020503000
D2549020503200
D2549020503400
D2549020503600
D2549020503800
D2549020504000
D2549020504200
D2549020504400
D2549020504600
D2549020504800
D2549020505000
D2549020505200
D2549020505400
D2549020505600
D2549020505800
D2549020506000
D2549020506200
D2549020506400
D2549020506600
D2549020506800
D2549020507000
D2549020507200
D2549020507400
D2549020507600
D2549020507800
D2549020508000
D2549020508200
D2549020508400
D2549020508600
D2549020508800
D2549020509000
D2549020509200
D2549020509600
D2549020509800
D2549020510000
D2549020510400
D2549020510600
D2549020510800
D2549020511000
D2549020511200
D2549020511600
D2549020511800
D2549020512000
D2549020512200
D2549020512400
D2549020512600
D2549020512800
D2549020513000
D2549020513200
D2549020513400
D2549020513600
D2549020513800

D2549020514000
D2549020514200
D2549020514400
D2549020514600
D2549020514800
D2549020600000
D2549020600200
D2549020600400
D2549020600800
D2549020601000
D2549020601200
D2549020601400
D2549020601600
D2549020601800
D2549020602000
D2549020602200
D2549020602400
D2549020602600
D2549020602800
D2549020603000
D2549020603200
D2549020603400
D2549020603600
D2549020603800
D2549020604000
D2549020604200
D2549020604400
D2549020604600
D2549020604800
D2549020605000
D2549020605200
D2549020605400
D2549020605600
D2549020605800
D2549020606000
D2549020606400
D2549020606600
D2549020606800
D2549020607000
D2549020607200
D2549020607400
D2549020607600
D2549020607800
D2549020608200
D2549020608400
D2549020608600
D2549020608800
D2549020609000
D2549020609200
D2549020609400
D2549020609600
D2549020609800
D2549020610000
D2549020610200
D2549020610400
D2549020610600
D2549020610800
D2549020611000

D2549020611200
D2549020611400
D2549020611600
D2549020611800
D2549020612000
D2549020612200
D2549020612400
D2549020612600
D2549020612800
D2549020613000
D2549020613200
D2549020613600
D2549020613800
D2549020614000
D2549020614400
D2549020614600
D2549020614800
D2549020700000
D2549020700200
D2549020700400
D2549020700600
D2549020700800
D2549020701000
D2549020701200
D2549020701400
D2549020701600
D2549020701800
D2549020702000
D2549020702200
D2549020702400
D2549020702600
D2549020702800
D2549020703200
D2549020703400
D2549020703600
D2549020703800
D2549020704000
D2549020704200
D2549020704400
D2549020704600
D2549020704800
D2549020705000
D2549020705200
D2549020705400
D2549020705600
D2549020705800
D2549020706000
D2549020706200
D2549020706400
D2549020706600
D2549020706800
D2549020707000
D2549020707200
D2549020707400
D2549020707600
D2549020707800
D2549020708000
D2549020708200

D2549020708400
D2549020708600
D2549020708800
D2549020709000
D2549020709200
D2549020709400
D2549020709600
D2549020709800
D2549020710000
D2549020710200
D2549020710400
D2549020710600
D2549020710800
D2549020711000
D2549020711200
D2549020711400
D2549020711600
D2549020712000
D2549020712200
D2549020712400
D2549020712600
D2549020712800
D2549020713000
D2549020713200
D2549020713400
D2549020713600
D2549020713800
D2549020714000
D2549020714400
D2549020714600
D2549020800000
D2549020800200
D2549020800400
D2549020800600
D2549020800800
D2549020801000
D2549020801200
D2549020801400
D2549020801600
D2549020801800
D2549020802000
D2549020802200
D2549020802400
D2549020802600
D2549020802800
D2549020803000
D2549020803200
D2549020803400
D2549020803600
D2549020803800
D2549020804000
D2549020804200
D2549020804400
D2549020804800
D2549020805000
D2549020805200
D2549020805400
D2549020805600

D2549020805800
D2549020806000
D2549020806200
D2549020806400
D2549020806600
D2549020806800
D2549020807000
D2549020807200
D2549020807400
D2549020807600
D2549020807800
D2549020808200
D2549020808400
D2549020808600
D2549020808800
D2549020809000
D2549020809400
D2549020809600
D2549020809800
D2549020810000
D2549020810200
D2549020810400
D2549020810600
D2549020810800
D2549020811200
D2549020811400
D2549020811600
D2549020811800
D2549020812000
D2549020812200
D2549020812400
D2549020812600
D2549020812800
D2549020813000
D2549020813200
D2549020813400
D2549020813600
D2549020813800
D2549020814000
D2549020814200
D2549020814400
D2549020814600
D2549020814800
D2549030400000
D2549030400200
D2549030400400
D2549030400600
D2549030401000
D2549030401200
D2549030401400
D2549030401600
D2549030401800
D2549030402000
D2549030402200
D2549030402400
D2549030402600
D2549030402800
D2549030403000

D2549030403400
D2549030403600
D2549030403800
D2549030404000
D2549030404200
D2549030404400
D2549030404600
D2549030404800
D2549030405000
D2549030405200
D2549030405400
D2549030405600
D2549030405800
D2549030406000
D2549030406400
D2549030406600
D2549030406800
D2549030407000
D2549030407200
D2549030407400
D2549030407600
D2549030407800
D2549030408000
D2549030408200
D2549030408400
D2549030408600
D2549030409000
D2549030409200
D2549030409400
D2549030409600
D2549030409800
D2549030410000
D2549030410200
D2549030410400
D2549030410600
D2549030410800
D2549030411200
D2549030411400
D2549030411600
D2549030411800
D2549030412000
D2549030412200
D2549030412400
D2549030412600
D2549030412800
D2549030413000
D2549030413200
D2549030413400
D2549030413600
D2549030414000
D2549030414200
D2549030414400
D2549030414600
D2549030414800
D2549030500200
D2549030500400
D2549030500600
D2549030500800

D2549030501000
D2549030501200
D2549030501400
D2549030501600
D2549030501800
D2549030502000
D2549030502200
D2549030502400
D2549030502600
D2549030502800
D2549030503000
D2549030503200
D2549030503400
D2549030503600
D2549030503800
D2549030504000
D2549030504200
D2549030504600
D2549030504800
D2549030505200
D2549030505400
D2549030505600
D2549030505800
D2549030506000
D2549030506200
D2549030506400
D2549030506600
D2549030506800
D2549030507000
D2549030507200
D2549030507400
D2549030507600
D2549030507800
D2549030508000
D2549030508200
D2549030508400
D2549030508600
D2549030508800
D2549030509000
D2549030509200
D2549030509400
D2549030509600
D2549030509800
D2549030510000
D2549030510200
D2549030510400
D2549030510600
D2549030510800
D2549030511000
D2549030511200
D2549030511400
D2549030511600
D2549030511800
D2549030512000
D2549030512200
D2549030512400
D2549030512800
D2549030513000

D2549030513200
D2549030513400
D2549030513600
D2549030513800
D2549030514000
D2549030514200
D2549030514400
D2549030514600
D2549030514800
D2549030600000
D2549030600200
D2549030600400
D2549030600600
D2549030600800
D2549030601000
D2549030601200
D2549030601400
D2549030601600
D2549030601800
D2549030602000
D2549030602200
D2549030602400
D2549030602600
D2549030602800
D2549030603000
D2549030603200
D2549030603400
D2549030603600
D2549030603800
D2549030604200
D2549030604400
D2549030604600
D2549030604800
D2549030605000
D2549030605200
D2549030605400
D2549030605600
D2549030605800
D2549030606000
D2549030606200
D2549030606400
D2549030606600
D2549030606800
D2549030607000
D2549030607200
D2549030607400
D2549030607600
D2549030607800
D2549030608000
D2549030608200
D2549030608400
D2549030608600
D2549030608800
D2549030609000
D2549030609200
D2549030609800
D2549030610000
D2549030610200

D2549030610400
D2549030610600
D2549030611000
D2549030611200
D2549030611400
D2549030611600
D2549030611800
D2549030612000
D2549030612200
D2549030612400
D2549030612600
D2549030612800
D2549030613200
D2549030613400
D2549030613600
D2549030613800
D2549030614000
D2549030614200
D2549030614400
D2549030614600
D2549030614800
D2549030700000
D2549030700200
D2549030700400
D2549030700600
D2549030700800
D2549030701000
D2549030701200
D2549030701400
D2549030701600
D2549030701800
D2549030702000
D2549030702200
D2549030702400
D2549030702600
D2549030702800
D2549030703000
D2549030703200
D2549030703400
D2549030703600
D2549030703800
D2549030704000
D2549030704200
D2549030704400
D2549030704600
D2549030704800
D2549030705200
D2549030705600
D2549040500200
D2549040500400
D2549040500600
D2549040500800
D2549040501000
D2549040501200
D2549040501400
D2549040501600
D2549040501800
D2549040502000

R225401107-000
R225401107-002
R225401107-004
R225401115-000
R225401115-002
R225401128-000
R225401133-000
R225401134-000
R225401134-002
R225401134-004
R225401134-006
R225401134-008
R225401134-010
R225401134-012
R225401134-014
R225401134-016
R225401134-018
R225401134-020
R225401134-022
R225401134-024
R225401134-026
R225401134-028
R225401134-030
R225401134-032
R225401134-034
R225401134-036
R225401134-038
R225401136-000
R225401136-004
R225401136-006
R225401136-008
R225401136-010
R225401136-012
R225401136-014
R225401136-016
R225401136-018
R225401136-020
R225401136-022
R225401136-024
R225401137-000
R225401137-002
R225401137-004
R225401137-006
R225401137-008
R225401137-010
R225401137-012
R225401137-014
R225401137-016
R225401139-000
R225401142-000
R225401142-002
R225401145-000
R225401145-002
R225401145-004
R225401145-006
R225401145-008
R225401145-010
R225401145-012

R225401145-014
R225401146-000
R225401146-002
R225401152-000
R225401152-002
R225401152-004
R225401152-006
R225401152-008
R225401152-010
R225401153-000
R225401159-000
R225401160-000
R225401160-002
R225401168-000
R225401168-002
R225401168-004
R225401168-006
R225401168-008
R225401168-010
R225401168-012
R225401168-014
R225401168-016
R225401168-018
R225401168-020
R225401168-022
R225401168-024
R225401168-026
R225401168-028
R225401172-000
R225401172-002
R225401172-004
R225401172-006
R225401172-008
R225401172-010
R225401172-012
R225401172-014
R225401172-016
R225401172-018
R225401175-000
R225401175-002
R225401176-000
R225401183-000
R225401183-002
R225401183-004
R225401183-006
R225401183-008
R225401188-000
R225401188-002
R225401188-004
R225401188-006
R225401192-000
R225401192-002
R225401195-000
R225401196-000
R225401196-002
R225401196-004
R225401196-006
R225401196-008

R225401196-010
R225401196-012
R225401196-014
R225401196-016
R225401196-018
R225401196-020
R225401196-022
R225401196-024
R225401196-034
R225401196-036
R225401196-038
R225401196-040
R225401196-042
R225401196-044
R225401196-046
R225401196-048
R225401196-050
R225401196-052
R225401196-054
R225401196-056
R225401196-058
R225401196-060
R225401196-062
R225401196-064
R225401196-066
R225401196-068
R225401196-070
R225401199-000
R225401199-002
R225401199-004
R225401199-006
R225401199-008
R225401199-010
R225401199-012
R225401600-000
R225401600-002
R225401600-004
R225401602-000
R225401603-000
R225401605-000
R225401605-002
R225401609-000
R225401611-000
R225401611-006
R225401611-008
R225401611-010
R225401611-012
R225401611-014
R225401611-016
R225401611-018
R225401611-020
R225401613-000
R225401614-000
R225401618-000
R225401618-002
R225401619-000
R225401619-002
R225401622-000

R225401622-002
R225401624-000
R225401625-000
R225401627-000
R225401627-002
R225401627-004
R225401629-000
R225401629-002
R225401639-000
R225401639-002
R225401643-000
R225401643-002
R225401643-004
R225401643-006
R225401643-008
R225401646-000
R225401646-002
R225401647-000
R225401648-000
R225401648-002
R225401648-004
R225401648-006
R225401648-008
R225401649-000
R225401656-000
R225401656-002
R225401658-000
R225401662-000
R225401662-002
R225401671-000
R225401671-002
R225401673-000
R225401673-002
R225401673-004
R225401673-006
R225401675-000
R225401676-000
R225401683-000
R225401685-000
R225401685-002
R225401688-000
R225401689-004
R225401689-006
R225401691-000
R225401691-002
R225401693-000
R225401697-000
R225401697-002
R225401803-000
R225401803-002
R225401808-000
R225401811-000
R225401814-000

Copyright © 2023

Diehl Aviation Hamburg GmbH
PROPRIETARY INFORMATION DISCLOSURE RESTRICTION
Violations are punishable and shall be prosecuted with all legal effects, i.e. damages and/or injunctive relief.
Third Party IPs are noted separately.
All publications, also in excerpts, are subject to prior written consent of Diehl Aviation Hamburg GmbH.
Users are kindly requested to notify Diehl Aviation Hamburg GmbH of any discrepancy, omission or error found in this manual.
Make sure, that you have the latest revision of this manual.
In case you are working with extracts from this manual, make sure that these extracts have the same revision status as the manual.
EU: No License Required (NLR) // US: The technical data in this document (or file) is not subject to EAR.

THIS PAGE IS INTENTIONALLY LEFT BLANK

HIGHLIGHTS

Revision No. 74 - Nov 27/23

Pages which have been added, revised or deleted are outlined below together with the reason for change of the revisions.

LOCATIONS	DESIGNATION	DESCRIPTION OF CHANGE

THIS PAGE IS INTENTIONALLY LEFT BLANK

RECORD OF REVISIONS

REV No.	ISSUE DATE	INSERTED		REV No.	ISSUE DATE	INSERTED	
56	Jun 30/2014						
57	Nov 30/2014						
58	Apr 30/2015						
59	Jun 30/2015						
60	Jul 31/2015						
61	Jan 31/2016						
62	Feb 29/2016						
63	Apr 30/2016						
64	Jul 31/2016						
65	Aug 31/2016						
66	Nov 30/2016						
67	May 31/2017						
68	Sep 30/2017						
69	Mar 31/2018						
70	Sep 30/2018						
71	Nov 12/2019						
72	Feb 13/2020						
73	Oct 03/2023						
I 74	Nov 27/2023						

THIS PAGE IS INTENTIONALLY LEFT BLANK

RECORD OF TEMPORARY REVISIONS

TEMP REV. No.	ISSUE DATE	INSERTED		REV No.	ISSUE DATE	REMOVED	
		DATE	BY			DATE	BY

THIS PAGE IS INTENTIONALLY LEFT BLANK

LIST OF SERVICE BULLETINS

SB No.	REV No.	MOD No.	ISSUE DATE	TITLE
25-1165			Nov 01/04	INTRODUCE IMPROVEMENTS TO THE LAVATORY.
25-1170	00		Nov 01/04	INTRODUCE A MODIFIED MICRO-SWITCH UNIT FOR THE LAVATORY LIGHT OPERATION.
25-1189	01		Nov 01/04	PROVIDE CABIN RECONFIGURA-TION FOR MONARCH AIRLINES.
25-1198	00		Nov 01/04	PROVIDE CABIN RECONFIGURA-TION FOR MONARCH AIRLINES.
25-1214	01		Feb 01/00	INTRODUCE A NEW BABY NURSING TABLE IN LAVATORY A.
25-1214	02		Aug 01/00	INTRODUCE A NEW BABY NURSING TABLE IN LAVATORY A.
25-1214	03		May 01/01	INTRODUCE A NEW BABY NURSING TABLE IN LAVATORY A.
25-1214	04		Nov 01/01	INTRODUCE A NEW BABY NURSING TABLE IN LAVATORY A.
25-1214			Nov 01/02	INTRODUCE A NEW BABY NURSING TABLE IN LAVATORY A.
25-1226			May 01/00	INTRODUCE SEVERAL CHANGES IN LAVATORIES MODULES.
25-1239	01		Nov 01/04	CABIN RECONFIGURATION FROM MONARCH (220PAX) TO DRAGON AIR (12B/L / 178 Y/C).
25-1287			Feb 01/03	INTRODUCE A MODIFIED INTRU-SION AND PENETRATION RESIS-TANCE COCKPIT DOOR.
25-1289	01		Nov 01/04	INSTALL A SIDEWALL MADE OF NEW HONEYCOMB MATERIAL AT LAVATORY A.
25-1293			Feb 01/03	CABIN LAYOUT RECONFIGURATION FROM CMM INTO CIT DEFINITION.

25-1305	06		Nov 01/04	INTRODUCE A MODIFIED INTRUSION AND PENETRATION RESISTANT COCKPIT DOOR.
25-1312	01		Nov 01/04	MODIFY ATTACHMENT OF SERVICE FLAP IN LAVATORY A.
25-1314	02		Nov 01/04	MODIFICATION OF THE FLOOR PAN.
25-1315	02		Nov 01/04	A319 CABIN RECONFIGURATION FOR FINNAIR.
25-1316	00		Nov 01/04	PROVIDE LAVATORY SINGLE BLADE DOOR RELEASE FUNCTION.
25-1325	01		Nov 01/04	A319 CJ CABIN RECONFIGURATION FOR QTR FROM BASELINE TO TWO CLASSES.
25-1360	02		Nov 01/04	CABIN RECONFIGURATION FOR IB01.
25-1365	00		Nov 01/06	INSPECTION/REPAIR OF LAVATORY WALL CORROSION.
25-1400	07		Nov 01/06	INSTALL A DEADBOLT IN THE REINFORCED COCKPIT DOOR.
25-1473	00		May 01/07	MODIFY NOSE AT CENTER DOORLATCH WITH DEADBOLT FOR COCKPIT DOOR.
25-1482	02		Nov 01/07	EQUIPMENT/FURNISHINGS - PASSENGER COMPARTMENT - CHANGE CABIN CONFIGURATION FROM 136 Y/C SEATS LAYOUT TO 144 Y/C SEATS LAYOUT.
26-1058	01		Nov 01/04	INTRODUCTION OF IMPROVED SMOKE DETECTOR.
35-1020			Nov 01/00	INTRODUCE MODIFIED CHEMICAL OXYGEN CONTAINER 15 MIN.
38-1052			Aug 01/02	INSTALL A MODIFIED FLUSH CONTROL UNIT (FCU) IN TOILET ASSEMBLY.
38-1055			Aug 01/00	LAVATORIES INTRODUCE A SELECTABLE DRAIN ASSEMBLY.
38-1059			Nov 01/02	INSTALL A MODIFIED FLUSH CONTROL UNIT (FCU) FOR THE LAVATORY.

52-1098	01		Nov 01/04	INSTALL AN ELECTRICAL RELEASE LATCH FOR THE COCKPIT DOOR.
A2-254-25-013	00		Apr 29/13	MODIFICATIONS OF LAVATORY UNITS
A2-254-25-015	03		Apr 03/14	INSTALLATION OF FREEZING PRO-TECTION FOR LAV.
A2-254-25-020	01		Jul 04/13	MODIFICATIONS OF LAVATORY UNITS.
A2-254-25-022	00		Sep 06/13	REPLACEMENT OF O2-BOX
A2-254-25-029	00		Feb 13/14	INSTALLATION OF FREEZING PRO-TECTION FOR LAV.
A2-254-25-032	01		Mar 06/2015	LAVATORY MODIFICATION AND WASHBASIN REPLACEMENT
A2-254-25-035	00		Jan 30/14	INSTALLATION OF FREEZING PRO-TECTION FOR LAV.
A2-254-25-036	02		Mar 18/2015	REPLACEMENT OF THE OXYGEN CONTAINER BOX
A2-254-25-037	00		Feb 13/15	MODIFICATION AND REDECORATION
A2-254-25-039	00		Aug 15/14	MODIFICATION OF LAVATORY UNITS
A2-254-25-042	00		Sep 10/14	OXYGEN MASK BOX REPLACEMENT
A2-254-25-044	00		Dec 09/14	OXYGEN MASK BOX REPLACEMENT
A2-254-25-045	00		Dec 08/2014	OXYGEN MASK BOX REPLACEMENT
A2-254-25-046	00		Apr 14/2015	EQUIPMENT/FURNISHINGS - LAVA-TORY - OXYGEN MASK BOX REPLACEMENT
A2-254-25-047	01		Mar 09/2016	EQUIPMENT/FURNISHINGS - LAVA-TORY - OXYGEN CONTAINER ASSY REPLACEMENT
A2-254-25-052	00		Jan 28/2015	OXYGEN MASK BOX REPLACEMENT
A2-254-25-054	00		Feb 27/2015	OXYGEN MASK BOX REPLACEMENT

A2-254-25-057	00		Sep 07/2015	EQUIPMENT/FURNISHINGS - LAVATORY - OXYGEN CONTAINER ASSY REPLACEMENT
A2-254-25-059	00		Feb 03/2015	INSTALLATION OF THE FREEZING PROTECTION
A2-254-25-064	00		Aug 20/2015	EQUIPMENT/FURNISHINGS - LAVATORY - OXYGEN CONTAINER ASSY REPLACEMENT
A2-254-25-069	00		Jul 08/2015	EQUIPMENT/FURNISHINGS - LAVATORY - OXYGEN CONTAINER ASSY REPLACEMENT
A2-254-25-070	00		Jul 13/2015	EQUIPMENT/FURNISHINGS - LAVATORY - OXYGEN CONTAINER ASSY REPLACEMENT
A2-254-25-072	00		Dec 02/14	INSTALLATION OF EQUIPMENT PROVISIONS
A2-254-25-073	00		Jul 06/2015	EQUIPMENT/FURNISHINGS - LAVATORY - OXYGEN CONTAINER ASSY REPLACEMENT
A2-254-25-077	01		Feb 05/2015	INSTALLATION OF THE FREEZING PROTECTION
A2-254-25-078	00		Aug 11/2015	EQUIPMENT/FURNISHINGS - LAVATORY - OXYGEN CONTAINER ASSY REPLACEMENT
A2-254-25-080	00		Jun 25/2015	OXYGEN MASK BOX REPLACEMENT
A2-254-25-083	00		Jul 20/2015	EQUIPMENT/FURNISHINGS - LAVATORY - OXYGEN CONTAINER ASSY REPLACEMENT
A2-254-25-085	00		Jul 28/2015	EQUIPMENT/FURNISHINGS - LAVATORY - OXYGEN CONTAINER ASSY REPLACEMENT
A2-254-25-087	00		Jul 30/2015	EQUIPMENT/FURNISHINGS - LAVATORY - OXYGEN CONTAINER ASSY REPLACEMENT
A2-254-25-093	00		Aug 18/2015	EQUIPMENT/FURNISHINGS - LAVATORY - OXYGEN CONTAINER ASSY REPLACEMENT

A2-254-25-098	00		Sep 30/2015	EQUIPMENT/FURNISHINGS - LAVATORY - OXYGEN CONTAINER ASSY REPLACEMENT
A2-254-25-100	00		Jan 08/2016	EQUIPMENT/FURNISHINGS - LAVATORY - OXYGEN CONTAINER ASSY REPLACEMENT
A2-254-25-106	00		Dec 07/2015	EQUIPMENT/FURNISHINGS - LAVATORY - MODIFICATION AND REDECORATION
A2-254-25-106	03		Apr 21/2016	EQUIPMENT/FURNISHINGS - LAVATORY - MODIFICATION AND REDECORATION
A2-254-25-106	04		Aug 05/2019	EQUIPMENT/FURNISHINGS - LAVATORY - MODIFICATION AND REDECORATION
A2-254-25-108	00		Nov 11/2015	EQUIPMENT/FURNISHINGS - LAVATORY - INSTALLATION OF THE FREEZING PROTECTION
A2-254-25-125	00		Apr 11/2016	EQUIPMENT/FURNISHINGS - LAVATORY - OXYGEN CONTAINER ASSY REPLACEMENT
A2-254-25-130	00		Mar 10/2017	EQUIPMENT/FURNISHINGS - LAVATORY - MODIFICATION AND REDECORATION
A2-254-25-131	00		Oct 25/2016	EQUIPMENT/FURNISHINGS – LAVATORY – REDECORATION AND MODIFICATION
A2-254-25-131	01		Jan 05/2017	EQUIPMENT/FURNISHINGS – LAVATORY – REDECORATION AND MODIFICATION
A2-254-25-154	00		Apr 06/2017	EQUIPMENT/FURNISHINGS - LAVATORY - OXYGEN CONTAINER ASSY REPLACEMENT

THIS PAGE IS INTENTIONALLY LEFT BLANK

LIST OF EFFECTIVE PAGES

SUBJECT.	PAGE		DATE
REVISION TRANSMITTAL SHEET	TL 1	R	Nov 27/23
	TL 2	R	Nov 27/23
TITLE PAGE	TP 1	R	Nov 27/23
	TP 2	R	Nov 27/23
	TP 3	R	Nov 27/23
	TP 4	R	Nov 27/23
	TP 5	R	Nov 27/23
	TP 6	R	Nov 27/23
	TP 7	R	Nov 27/23
	TP 8	R	Nov 27/23
	TP 9	R	Nov 27/23
	TP 10	R	Nov 27/23
	TP 11	R	Nov 27/23
	TP 12	R	Nov 27/23
	TP 13	R	Nov 27/23
	TP 14	R	Nov 27/23
	TP 15	R	Nov 27/23
	TP 16	R	Nov 27/23
	TP 17	R	Nov 27/23
	TP 18	R	Nov 27/23
	TP 19	R	Nov 27/23
	TP 20	R	Nov 27/23
HIGHLIGHTS	HLTS 1	R	Nov 27/23
	HLTS 2	R	Nov 27/23
RECORD OF REVISIONS	ROR 1	R	Nov 27/23
	ROR 2	R	Nov 27/23
RECORD OF TEMPORARY REVISIONS	RTR 1	R	Nov 27/23
	RTR 2	R	Nov 27/23
SERVICE BULLETIN LIST	SBL 1	R	Nov 27/23
	SBL 2	R	Nov 27/23
	SBL 3	R	Nov 27/23
	SBL 4	R	Nov 27/23
	SBL 5	R	Nov 27/23
	SBL 6	R	Nov 27/23
LIST OF EFFECTIVE PAGES	LEP 1	R	Nov 27/23
	LEP 2	R	Nov 27/23
	LEP 3	R	Nov 27/23
	LEP 4	R	Nov 27/23
	LEP 5	R	Nov 27/23
	LEP 6	R	Nov 27/23
	LEP 7	R	Nov 27/23
	LEP 8	R	Nov 27/23
	LEP 9	R	Nov 27/23
	LEP 10	R	Nov 27/23
	LEP 11	R	Nov 27/23
	LEP 12	R	Nov 27/23
	LEP 13	R	Nov 27/23
	LEP 14	R	Nov 27/23
	LEP 15	R	Nov 27/23
	LEP 16	R	Nov 27/23
	LEP 17	R	Nov 27/23
	LEP 18	R	Nov 27/23

SUBJECT.	PAGE		DATE	SUBJECT.	PAGE		DATE
	LEP 19	R	Nov 27/23		LEP 49	R	Nov 27/23
	LEP 20	R	Nov 27/23		LEP 50	R	Nov 27/23
	LEP 21	R	Nov 27/23		LEP 51	R	Nov 27/23
	LEP 22	R	Nov 27/23		LEP 52	R	Nov 27/23
	LEP 23	R	Nov 27/23		LEP 53	R	Nov 27/23
	LEP 24	R	Nov 27/23		LEP 54	R	Nov 27/23
	LEP 25	R	Nov 27/23		LEP 55	R	Nov 27/23
	LEP 26	R	Nov 27/23		LEP 56	R	Nov 27/23
	LEP 27	R	Nov 27/23		LEP 57	R	Nov 27/23
	LEP 28	R	Nov 27/23		LEP 58	R	Nov 27/23
	LEP 29	R	Nov 27/23		LEP 59	R	Nov 27/23
	LEP 30	R	Nov 27/23		LEP 60	R	Nov 27/23
	LEP 31	R	Nov 27/23		LEP 61	R	Nov 27/23
	LEP 32	R	Nov 27/23		LEP 62	R	Nov 27/23
	LEP 33	R	Nov 27/23		LEP 63	R	Nov 27/23
	LEP 34	R	Nov 27/23		LEP 64	R	Nov 27/23
	LEP 35	R	Nov 27/23		LEP 65	R	Nov 27/23
	LEP 36	R	Nov 27/23		LEP 66	R	Nov 27/23
	LEP 37	R	Nov 27/23		LEP 67	R	Nov 27/23
	LEP 38	R	Nov 27/23		LEP 68	R	Nov 27/23
	LEP 39	R	Nov 27/23		LEP 69	R	Nov 27/23
	LEP 40	R	Nov 27/23		LEP 70	R	Nov 27/23
	LEP 41	R	Nov 27/23		LEP 71	R	Nov 27/23
	LEP 42	R	Nov 27/23		LEP 72	R	Nov 27/23
	LEP 43	R	Nov 27/23		LEP 73	R	Nov 27/23
	LEP 44	R	Nov 27/23		LEP 74	R	Nov 27/23
	LEP 45	R	Nov 27/23		LEP 75	R	Nov 27/23
	LEP 46	R	Nov 27/23		LEP 76	R	Nov 27/23
	LEP 47	R	Nov 27/23		LEP 77	R	Nov 27/23
	LEP 48	R	Nov 27/23		LEP 78	R	Nov 27/23

SUBJECT.	PAGE		DATE
	LEP 79	R	Nov 27/23
	LEP 80	R	Nov 27/23
	LEP 81	R	Nov 27/23
	LEP 82	R	Nov 27/23
	LEP 83	R	Nov 27/23
	LEP 84	R	Nov 27/23
	LEP 85	R	Nov 27/23
	LEP 86	R	Nov 27/23
	LEP 87	R	Nov 27/23
	LEP 88	R	Nov 27/23
	LEP 89	R	Nov 27/23
	LEP 90	R	Nov 27/23
	LEP 91	R	Nov 27/23
	LEP 92	R	Nov 27/23
	LEP 93	R	Nov 27/23
	LEP 94	R	Nov 27/23
	LEP 95	R	Nov 27/23
	LEP 96	R	Nov 27/23
	LEP 97	R	Nov 27/23
	LEP 98	R	Nov 27/23
	LEP 99	R	Nov 27/23
	LEP 100	R	Nov 27/23
	LEP 101	R	Nov 27/23
	LEP 102	R	Nov 27/23
	LEP 103	R	Nov 27/23
	LEP 104	R	Nov 27/23
	LEP 105	R	Nov 27/23
	LEP 106	R	Nov 27/23
	LEP 107	R	Nov 27/23
	LEP 108	R	Nov 27/23

SUBJECT.	PAGE		DATE
	LEP 109	R	Nov 27/23
	LEP 110	R	Nov 27/23
	LEP 111	R	Nov 27/23
	LEP 112	R	Nov 27/23
	LEP 113	R	Nov 27/23
	LEP 114	R	Nov 27/23
	LEP 115	R	Nov 27/23
	LEP 116	R	Nov 27/23
	LEP 117	R	Nov 27/23
	LEP 118	R	Nov 27/23
	LEP 119	R	Nov 27/23
	LEP 120	R	Nov 27/23
	LEP 121	R	Nov 27/23
	LEP 122	R	Nov 27/23
	LEP 123	R	Nov 27/23
	LEP 124	R	Nov 27/23
	LEP 125	R	Nov 27/23
	LEP 126	R	Nov 27/23
	LEP 127	R	Nov 27/23
	LEP 128	R	Nov 27/23
	LEP 129	R	Nov 27/23
	LEP 130	R	Nov 27/23
	LEP 131	R	Nov 27/23
	LEP 132	R	Nov 27/23
	LEP 133	R	Nov 27/23
	LEP 134	R	Nov 27/23
	LEP 135	R	Nov 27/23
	LEP 136	R	Nov 27/23
	LEP 137	R	Nov 27/23
	LEP 138	R	Nov 27/23
LIST OF ILLUSTRATIONS	LOI 1	R	Nov 27/23

SUBJECT.	PAGE		DATE	SUBJECT.	PAGE		DATE
	LOI 2	R	Nov 27/23		LOT 14	R	Nov 27/23
	LOI 3	R	Nov 27/23		LOT 15	R	Nov 27/23
	LOI 4	R	Nov 27/23		LOT 16	R	Nov 27/23
	LOI 5	R	Nov 27/23		LOT 17	R	Nov 27/23
	LOI 6	R	Nov 27/23		LOT 18	R	Nov 27/23
	LOI 7	R	Nov 27/23		LOT 19	R	Nov 27/23
	LOI 8	R	Nov 27/23		LOT 20	R	Nov 27/23
	LOI 9	R	Nov 27/23		LOT 21	R	Nov 27/23
	LOI 10	R	Nov 27/23		LOT 22	R	Nov 27/23
	LOI 11	R	Nov 27/23		LOT 23	R	Nov 27/23
	LOI 12	R	Nov 27/23		LOT 24	R	Nov 27/23
	LOI 13	R	Nov 27/23		LOT 25	R	Nov 27/23
	LOI 14	R	Nov 27/23		LOT 26	R	Nov 27/23
	LOI 15	R	Nov 27/23		LOT 27	R	Nov 27/23
	LOI 16	R	Nov 27/23		LOT 28	R	Nov 27/23
	LOI 17	R	Nov 27/23		LOT 29	R	Nov 27/23
	LOI 18	R	Nov 27/23		LOT 30	R	Nov 27/23
LIST OF TABLES	LOT 1	R	Nov 27/23		LOT 31	R	Nov 27/23
	LOT 2	R	Nov 27/23		LOT 32	R	Nov 27/23
	LOT 3	R	Nov 27/23		LOT 33	R	Nov 27/23
	LOT 4	R	Nov 27/23		LOT 34	R	Nov 27/23
	LOT 5	R	Nov 27/23		LOT 35	R	Nov 27/23
	LOT 6	R	Nov 27/23		LOT 36	R	Nov 27/23
	LOT 7	R	Nov 27/23		LOT 37	R	Nov 27/23
	LOT 8	R	Nov 27/23		LOT 38	R	Nov 27/23
	LOT 9	R	Nov 27/23		LOT 39	R	Nov 27/23
	LOT 10	R	Nov 27/23		LOT 40	R	Nov 27/23
	LOT 11	R	Nov 27/23		LOT 41	R	Nov 27/23
	LOT 12	R	Nov 27/23		LOT 42	R	Nov 27/23
	LOT 13	R	Nov 27/23		LOT 43	R	Nov 27/23

SUBJECT.	PAGE		DATE
	LOT 44	R	Nov 27/23
	LOT 45	R	Nov 27/23
	LOT 46	R	Nov 27/23
	LOT 47	R	Nov 27/23
	LOT 48	R	Nov 27/23
	LOT 49	R	Nov 27/23
	LOT 50	R	Nov 27/23
	LOT 51	R	Nov 27/23
	LOT 52	R	Nov 27/23
	LOT 53	R	Nov 27/23
	LOT 54	R	Nov 27/23
	LOT 55	R	Nov 27/23
	LOT 56	R	Nov 27/23
	LOT 57	R	Nov 27/23
	LOT 58	R	Nov 27/23
TABLE OF CONTENTS	TOC 1	R	Nov 27/23
	TOC 2	R	Nov 27/23
INTRODUCTION	INTRO 1		Oct 03/23
	INTRO 2		Oct 03/23
	INTRO 3		Oct 03/23
	INTRO 4		Oct 03/23
DESCRIPTION AND OPERATION	1		Sep 30/18
	2		Sep 30/18
	3		Sep 30/18
	4		Sep 30/18
	5		Sep 30/18
	6		Sep 30/18
	7		Jun 30/14
	8		Jun 30/14
	9		Jun 30/14
	10		Jun 30/14
	11		Jun 30/14
	12		Jun 30/14
TESTING AND FAULT ISOLATION	1001		Jun 30/14
	1002		Jun 30/14
SCHEMATIC AND WIRING DIAGRAMS	2001		Jun 30/14
	2002		Jun 30/14
	2003		Jun 30/14
	2004		Jun 30/14
	2005/2006		Jun 30/14
	2007/2008		Jun 30/14
	2009/2010		Jun 30/14
	2011/2012		Jun 30/14
	2012		Jun 30/14
	2013		Jun 30/14
	2014		Jun 30/14
	2015/2016		Jun 30/14
	2017/2018		Jun 30/14
	2019/2020		Jun 30/14
	2021/2022		Jun 30/14
	2022		Sep 30/17
	2023		Sep 30/17
	2024		Sep 30/17
	2025		Sep 30/17
	2026		Sep 30/17
	2027		Jan 31/16

SUBJECT.	PAGE	DATE
	2028	Jan 31/16
	2029/2030	Jan 31/16
	2031/2032	Jan 31/16
	2032	Jan 31/16
	2033/2034	Jan 31/16
	2035/2036	Jan 31/16
	2036	Nov 30/16
	2037/2038	Jan 31/16
	2039/2040	Jan 31/16
	2041/2042	Jan 31/16
	2042	Jan 31/16
	2043/2044	Jan 31/16
	2045/2046	Jan 31/16
	2046	Jan 31/16
	2047/2048	Jan 31/16
	2049/2050	Jan 31/16
	2050	Feb 29/16
	2051/2052	Jan 31/16
	2053/2054	Jan 31/16
	2054	Feb 29/16
	2055/2056	Feb 29/16
	2057/2058	Feb 29/16
	2059/2060	Feb 29/16
	2060	Feb 29/16
	2061/2062	Feb 29/16
	2063/2064	Feb 29/16
	2065/2066	Nov 30/16
	2066	Nov 30/16
	2067/2068	Feb 29/16
	2069/2070	Feb 29/16
	2070	Feb 29/16
	2071/2072	Feb 29/16
	2073/2074	Feb 29/16
	2074	Feb 29/16
	2075/2076	Feb 29/16
	2077/2078	Nov 30/16
	2078	Nov 30/16
	2079/2080	Feb 29/16
	2081/2082	Feb 29/16
	2082	Feb 29/16
	2083/2084	Feb 29/16
	2085/2086	Feb 29/16
	2086	Feb 29/16
	2087/2088	Feb 29/16
	2089/2090	Feb 29/16
	2090	Feb 29/16
	2091/2092	Feb 29/16
	2093/2094	Feb 29/16
	2095/2096	Apr 30/16
	2096	Apr 30/16
	2097/2098	Apr 30/16
	2099/2100	Apr 30/16
	2100	Apr 30/16
	2101/2102	Apr 30/16
	2103/2104	Apr 30/16
	2105/2106	Jul 31/16
	2106	Jul 31/16
	2107/2108	Jul 31/16
	2109/2110	Jul 31/16

SUBJECT.	PAGE	DATE
	2111/2112	May 31/17
	2112	May 31/17
	2113/2114	May 31/17
	2115/2116	May 31/17
	2116	May 31/17
	2117/2118	May 31/17
	2119/2120	May 31/17
	2120	May 31/17
	2121/2122	May 31/17
	2123/2124	May 31/17
DISASSEMBLY	3001	Nov 30/16
	3002	Nov 30/16
	3003	Nov 30/16
	3004	Nov 30/16
	3005	Nov 30/16
	3006	Sep 30/17
	3007	Sep 30/17
	3008	Sep 30/17
	3009	Sep 30/17
	3010	Sep 30/17
	3011	Sep 30/17
	3012	Sep 30/17
	3013	Sep 30/17
	3014	Sep 30/17
	3015	Sep 30/17
	3016	Sep 30/17
	3017	Sep 30/17
	3018	Sep 30/17
	3019	Sep 30/17
	3020	Sep 30/17
	3021	Sep 30/17
	3022	Sep 30/17
	3023	Sep 30/17
	3024	Sep 30/17
	3025	Sep 30/17
	3026	Jan 31/16
	3027	Jan 31/16
	3028	Sep 30/17
	3029	Sep 30/17
	3030	Sep 30/17
	3031	Sep 30/17
	3032	Sep 30/17
	3033	Sep 30/17
	3034	Feb 29/16
	3035	Feb 29/16
	3036	Feb 29/16
	3037	Nov 30/16
	3038	Nov 30/16
	3039	Nov 30/16
	3040	Nov 30/16
	3041	Nov 30/16
	3042	Nov 30/16
	3043	Nov 30/16
	3044	Nov 30/16
	3045	Nov 30/16

SUBJECT.	PAGE	DATE	SUBJECT.	PAGE	DATE
	3046	Jan 31/16		3074	Feb 29/16
	3047	Jan 31/16		3075	Feb 29/16
	3048	Jan 31/16		3076	Feb 29/16
	3049	Jan 31/16		3077	Feb 29/16
	3050	Jan 31/16		3078	Jun 30/14
	3051	Jan 31/16		3079	Jun 30/14
	3052	Jan 31/16		3080	Jun 30/14
	3053	Jan 31/16		3081	Feb 29/16
	3054	Jan 31/16		3082	Feb 29/16
	3055	Jan 31/16		3083	Feb 29/16
	3056	Jan 31/16		3084	Feb 29/16
	3057	Jan 31/16		3085	Feb 29/16
	3058	Jan 31/16		3086	Sep 30/17
	3059	Jan 31/16		3087	Sep 30/17
	3060	Jan 31/16		3088	Sep 30/17
	3061	Sep 30/17		3089	Sep 30/17
	3062	Sep 30/17		3090	Sep 30/17
	3063	Sep 30/17		3091	Sep 30/17
	3064	Sep 30/17		3092	Sep 30/17
	3065	Sep 30/17		3093	Sep 30/17
	3066	Sep 30/17		3094	Sep 30/17
	3067	Sep 30/17		3095	Feb 29/16
	3068	Sep 30/17		3096	Feb 29/16
	3069	Sep 30/17		3097	Feb 29/16
	3070	Sep 30/17		3098	Jun 30/14
	3071	Sep 30/17		3099	Jun 30/14
	3072	Sep 30/17		3100	Jan 31/16
	3073	Feb 29/16		3101	Jan 31/16
				3102	Jan 31/16

SUBJECT.	PAGE	DATE	SUBJECT.	PAGE	DATE
	3103	Jan 31/16		3133	Jul 31/15
	3104	Jan 31/16		3134	Jul 31/15
	3105	Jan 31/16		3135	Jul 31/15
	3106	Jan 31/16		3136	Jul 31/15
	3107	Jan 31/16		3137	Jul 31/15
	3108	Jan 31/16		3138	Feb 29/16
	3109	Jan 31/16		3139	Feb 29/16
	3110	Jan 31/16		3140	Feb 29/16
	3111	Jan 31/16		3141	Feb 29/16
	3112	Jan 31/16		3142	Feb 29/16
	3113	Jan 31/16		3143	Feb 29/16
	3114	Jan 31/16		3144	Feb 29/16
	3115	Jan 31/16		3145	Feb 29/16
	3116	Jan 31/16		3146	Feb 29/16
	3117	Jan 31/16		3147	Feb 29/16
	3118	Jan 31/16		3148	Feb 29/16
	3119	Jul 31/15		3149	Feb 29/16
	3120	Jul 31/15		3150	Feb 29/16
	3121	Jul 31/15		3151	Feb 29/16
	3122	Jul 31/15		3152	Feb 29/16
	3123	Jul 31/15		3153	Feb 29/16
	3124	Jul 31/15		3154	Feb 29/16
	3125	Jul 31/15		3155	Feb 29/16
	3126	Jul 31/15		3156	Feb 29/16
	3127	Jul 31/15		3157	Feb 29/16
	3128	Jul 31/15		3158	Nov 30/16
	3129	Jul 31/15		3159	Nov 30/16
	3130	Jul 31/15		3160	Nov 30/16
	3131	Jul 31/15		3161	Nov 30/16
	3132	Jul 31/15		3162	Nov 30/16

SUBJECT.	PAGE	DATE	SUBJECT.	PAGE	DATE
	3163	Nov 30/16		3193	Nov 30/16
	3164	Nov 30/16		3194	Nov 30/16
	3165	Nov 30/16		3195	Nov 30/16
	3166	Nov 30/16		3196	Nov 30/16
	3167	Nov 30/16		3197	Nov 30/16
	3168	Nov 30/16		3198	Nov 30/16
	3169	Nov 30/16		3199	Nov 30/16
	3170	Nov 30/16		3200	Nov 30/16
	3171	Nov 30/16		3201	Nov 30/16
	3172	Feb 29/16		3202	Nov 30/16
	3173	Feb 29/16		3203	Feb 29/16
	3174	Feb 29/16		3204	Feb 29/16
	3175	Feb 29/16		3205	Feb 29/16
	3176	Feb 29/16		3206	Feb 29/16
	3177	Feb 29/16		3207	Feb 29/16
	3178	Feb 29/16		3208	Feb 29/16
	3179	Feb 29/16		3209	Feb 29/16
	3180	Feb 29/16		3210	Feb 29/16
	3181	Feb 29/16		3211	Feb 29/16
	3182	Feb 29/16		3212	Feb 29/16
	3183	Feb 29/16		3213	Feb 29/16
	3184	Nov 30/16		3214	Feb 29/16
	3185	Nov 30/16		3215	Feb 29/16
	3186	Nov 30/16		3216	Feb 29/16
	3187	Nov 30/16		3217	Feb 29/16
	3188	Nov 30/16		3218	Jul 31/15
	3189	Nov 30/16		3219	Jul 31/15
	3190	Nov 30/16		3220	Jul 31/15
	3191	Nov 30/16		3221	Jul 31/15
	3192	Nov 30/16		3222	Jul 31/15

SUBJECT.	PAGE	DATE	SUBJECT.	PAGE	DATE
	3223	Jul 31/15		3253	Feb 29/16
	3224	Jul 31/15		3254	Feb 29/16
	3225	Jul 31/15		3255	Nov 30/16
	3226	Jul 31/15		3256	Nov 30/16
	3227	Jul 31/15		3257	Nov 30/16
	3228	Jul 31/15		3258	Nov 30/16
	3229	Jul 31/15		3259	Nov 30/16
	3230	Jul 31/15		3260	Nov 30/16
	3231	Jul 31/15		3261	Nov 30/16
	3232	Jul 31/15		3262	Nov 30/16
	3233	Jul 31/15		3263	Nov 30/16
	3234	Feb 29/16		3264	Nov 30/16
	3235	Feb 29/16		3265	Nov 30/16
	3236	Feb 29/16		3266	Nov 30/16
	3237	Feb 29/16		3267	Nov 30/16
	3238	Feb 29/16		3268	Nov 30/16
	3239	Feb 29/16		3269	Jan 31/16
	3240	Feb 29/16		3270	Jan 31/16
	3241	Feb 29/16		3271	Jan 31/16
	3242	Feb 29/16		3272	Jan 31/16
	3243	Feb 29/16		3273	Jan 31/16
	3244	Feb 29/16		3274	Jan 31/16
	3245	Feb 29/16		3275	Jan 31/16
	3246	Feb 29/16		3276	Jan 31/16
	3247	Feb 29/16		3277	Jan 31/16
	3248	Feb 29/16		3278	Jan 31/16
	3249	Feb 29/16		3279	Jan 31/16
	3250	Feb 29/16		3280	Jan 31/16
	3251	Feb 29/16		3281	Jan 31/16
	3252	Feb 29/16		3282	Jan 31/16

SUBJECT.	PAGE	DATE	SUBJECT.	PAGE	DATE
	3283	Jan 31/16		3310	Sep 30/17
	3284	Jan 31/16		3311	Sep 30/17
	3285	Jan 31/16		3312	Sep 30/17
	3286	Apr 30/15		3313	Sep 30/17
	3287	Apr 30/15		3314	Sep 30/17
	3288	Apr 30/15		3315	Sep 30/17
	3289	Apr 30/15		3316	Sep 30/17
	3290	Apr 30/15		3317	Sep 30/17
	3291	Apr 30/15		3318	Sep 30/17
	3292	Apr 30/15		3319	Sep 30/17
	3293	Apr 30/15		3320	Sep 30/17
	3294	Apr 30/15		3321	Sep 30/17
	3295	Apr 30/15		3322	Sep 30/17
	3296	Apr 30/15		3323	Sep 30/17
	3297	Apr 30/15		3324	Sep 30/17
	3298	Apr 30/15		3325	Sep 30/17
	3299	Apr 30/15		3326	Sep 30/17
	3300	Apr 30/15		3327	Sep 30/17
	3301	Apr 30/15		3328	Sep 30/17
	3302	Sep 30/17		3329	Sep 30/17
	3303	Sep 30/17		3330	Sep 30/17
	3304	Sep 30/17		3331	Sep 30/17
	3305	Sep 30/17		3332	Sep 30/17
	3306	Sep 30/17		3333	Sep 30/17
	3307	Sep 30/17		3334	Sep 30/17
	3308	Sep 30/17		3335	Sep 30/17
	3309	Sep 30/17		3336	Sep 30/17

SUBJECT.	PAGE	DATE	SUBJECT.	PAGE	DATE
	3337	Sep 30/17		3365	Jun 30/14
	3338	Sep 30/17		3366	Jun 30/14
	3339	Sep 30/17		3367	Jun 30/14
	3340	Sep 30/17		3368	Jun 30/14
	3341	Sep 30/17		3369	Jun 30/14
	3342	Sep 30/17		3370	Jun 30/14
	3343	Sep 30/17		3371	Jun 30/14
	3344	Sep 30/17		3372	Jun 30/14
	3345	Sep 30/17		3373	Jun 30/14
	3346	Sep 30/17		3374	Jul 31/15
	3347	Sep 30/17		3375	Jul 31/15
	3348	Sep 30/17		3376	Jul 31/15
	3349	Feb 29/16		3377	Jul 31/15
	3350	Feb 29/16		3378	Jul 31/15
	3351	Feb 29/16		3379	Jul 31/15
	3352	Feb 29/16		3380	Jul 31/15
	3353	Feb 29/16		3381	Jul 31/15
	3354	Feb 29/16		3382	Jul 31/15
	3355	Feb 29/16		3383	Jul 31/15
	3356	Feb 29/16		3384	Jul 31/15
	3357	Feb 29/16		3385	Jul 31/15
	3358	Feb 29/16		3386	Jul 31/15
	3359	Feb 29/16		3387	Jul 31/15
	3360	Feb 29/16		3388	Jul 31/15
	3361	Feb 29/16		3389	Nov 30/16
	3362	Jun 30/14		3390	Nov 30/16
	3363	Jun 30/14		3391	Nov 30/16
	3364	Jun 30/14		3392	Nov 30/16
				3393	Nov 30/16
				3394	Nov 30/16

SUBJECT.	PAGE	DATE	SUBJECT.	PAGE	DATE
	3395	Nov 30/16		3425	Jul 31/15
	3396	Nov 30/16		3426	Jul 31/15
	3397	Nov 30/16		3427	Jul 31/15
	3398	Nov 30/16		3428	Jul 31/15
	3399	Nov 30/16		3429	Jul 31/15
	3400	Nov 30/16		3430	Jul 31/15
	3401	Nov 30/16		3431	Jul 31/15
	3402	Nov 30/16		3432	Jul 31/15
	3403	Nov 30/16		3433	Jul 31/15
	3404	Nov 30/16		3434	Jul 31/15
	3405	Nov 30/16		3435	Jul 31/15
	3406	Nov 30/16		3436	Sep 30/17
	3407	Nov 30/16		3437	Sep 30/17
	3408	Nov 30/16		3438	Sep 30/17
	3409	Nov 30/16		3439	Sep 30/17
	3410	Nov 30/16		3440	Sep 30/17
	3411	Nov 30/16		3441	Sep 30/17
	3412	Nov 30/16		3442	Sep 30/17
	3413	Nov 30/16		3443	Sep 30/17
	3414	Nov 30/16		3444	Sep 30/17
	3415	Nov 30/16		3445	Sep 30/17
	3416	Nov 30/16		3446	Sep 30/17
	3417	Nov 30/16		3447	Sep 30/17
	3418	Nov 30/16		3448	Sep 30/17
	3419	Nov 30/16		3449	Sep 30/17
	3420	Nov 30/16		3450	Sep 30/17
	3421	Nov 30/16		3451	Sep 30/17
	3422	Jul 31/15		3452	Sep 30/17
	3423	Jul 31/15			
	3424	Jul 31/15			

SUBJECT.	PAGE	DATE	SUBJECT.	PAGE	DATE
	3453	Sep 30/17		3481	May 31/17
	3454	Sep 30/17		3482	May 31/17
	3455	Sep 30/17		3483	May 31/17
	3456	Sep 30/17		3484	May 31/17
	3457	Sep 30/17		3485	May 31/17
	3458	Sep 30/17		3486	May 31/17
	3459	Sep 30/17		3487	May 31/17
	3460	Sep 30/17		3488	May 31/17
	3461	Sep 30/17		3489	Nov 30/16
	3462	Sep 30/17		3490	Nov 30/16
	3463	Sep 30/17		3491	Nov 30/16
	3464	Sep 30/17		3492	Nov 30/16
	3465	Sep 30/17		3493	Nov 30/16
	3466	Feb 29/16		3494	Jan 31/16
	3467	Feb 29/16		3495	Jan 31/16
	3468	Feb 29/16		3496	Jan 31/16
	3469	Feb 29/16		3497	Jan 31/16
	3470	Feb 29/16		3498	Jan 31/16
	3471	Feb 29/16		3499	Jan 31/16
	3472	Jan 31/16		3500	Jan 31/16
	3473	Jan 31/16		3501	Feb 29/16
	3474	Jan 31/16		3502	Feb 29/16
	3475	Jan 31/16		3503	Feb 29/16
	3476	Jan 31/16		3504	Feb 29/16
	3477	Jan 31/16		3505	Feb 29/16
	3478	Jan 31/16		3506	Feb 29/16
	3479	Jan 31/16		3507	Feb 29/16
	3480	May 31/17		3508	Feb 29/16
				3509	Feb 29/16

SUBJECT.	PAGE	DATE
	3510	Feb 29/16
	3511	Feb 29/16
	3512	Feb 29/16
	3513	Feb 29/16
	3514	Feb 29/16
	3515	Feb 29/16
	3516	Feb 29/16
	3517	Sep 30/17
	3518	Sep 30/17
	3519	Sep 30/17
	3520	Sep 30/17
	3521	Sep 30/17
	3522	Sep 30/17
	3523	Sep 30/17
	3524	Jun 30/14
	3525	Jun 30/14
	3526	Jun 30/14
	3527	Jun 30/14
	3528	Feb 29/16
	3529	Feb 29/16
	3530	Feb 29/16
	3531	Feb 29/16
	3532	Feb 29/16
	3533	Feb 29/16
	3534	Feb 29/16
	3535	Nov 30/16
	3536	Nov 30/16
	3537	Nov 30/16
	3538	Nov 30/16
	3539	Nov 30/16
	3540	May 31/17
	3541	May 31/17
	3542	May 31/17
	3543	May 31/17
	3544	May 31/17
	3545	Jun 30/14
	3546	Jun 30/14
	3547	Jun 30/14
	3548	Jun 30/14
	3549	Sep 30/17
	3550	Sep 30/17
	3551	Sep 30/17
	3552	Sep 30/17
	3553	Sep 30/17
	3554	Sep 30/17
	3555	Sep 30/17
	3556	Sep 30/17
	3557	Jun 30/14
	3558	Jun 30/14
	3559	Jun 30/14
	3560	Jun 30/14
	3561	Jan 31/16
	3562	Jan 31/16
	3563	Jan 31/16
	3564	Jan 31/16
	3565	Jan 31/16
	3566	Jan 31/16

SUBJECT.	PAGE	DATE	SUBJECT.	PAGE	DATE
	3567	Sep 30/17		3595	Feb 29/16
	3568	Sep 30/17		3596	Feb 29/16
	3569	Sep 30/17		3597	Feb 29/16
	3570	Sep 30/17		3598	Feb 29/16
	3571	Sep 30/17		3599	Sep 30/17
	3572	Sep 30/17		3600	Sep 30/17
	3573	Sep 30/17		3601	Sep 30/17
	3574	Sep 30/17		3602	Sep 30/17
	3575	Sep 30/17		3603	Sep 30/17
	3576	Sep 30/17		3604	Sep 30/17
	3577	Sep 30/17		3605	Sep 30/17
	3578	Sep 30/17		3606	Sep 30/17
	3579	Sep 30/17		3607	Sep 30/17
	3580	Sep 30/17		3608	Nov 30/16
	3581	Sep 30/17		3609	Nov 30/16
	3582	Sep 30/17		3610	Nov 30/16
	3583	Sep 30/17		3611	Nov 30/16
	3584	Sep 30/17		3612	Nov 30/16
	3585	Jan 31/16		3613	Nov 30/16
	3586	Jan 31/16		3614	Sep 30/17
	3587	Jan 31/16		3615	Sep 30/17
	3588	Jan 31/16		3616	Sep 30/17
	3589	Jan 31/16		3617	Sep 30/17
	3590	Jan 31/16		3618	Sep 30/17
	3591	Feb 29/16		3619	Sep 30/17
	3592	Feb 29/16		3620	Sep 30/17
	3593	Feb 29/16		3621	Sep 30/17
	3594	Feb 29/16		3622	Sep 30/17

SUBJECT.	PAGE	DATE	SUBJECT.	PAGE	DATE
	3623	Sep 30/17		3650	Sep 30/17
	3624	Sep 30/17		3651	Sep 30/17
	3625	Sep 30/17		3652	Sep 30/17
	3626	Sep 30/17		3653	Sep 30/17
	3627	Sep 30/17		3654	Sep 30/17
	3628	Sep 30/17		3655	Sep 30/17
	3629	Sep 30/17		3656	Sep 30/17
	3630	Sep 30/17		3657	Sep 30/17
	3631	Sep 30/17		3658	Nov 12/19
	3632	Sep 30/17		3659	Nov 12/19
	3633	Sep 30/17		3660	Nov 12/19
	3634	Sep 30/17		3661	Nov 12/19
	3635	Sep 30/17		3662	Nov 12/19
	3636	Sep 30/17		3663	Nov 12/19
	3637	Sep 30/17		3664	Nov 12/19
	3638	Sep 30/17		3665	Nov 12/19
	3639	Sep 30/17		3666	Nov 12/19
	3640	Jan 31/16		3667	Nov 12/19
	3641	Jan 31/16		3668	Nov 12/19
	3642	Sep 30/17		3669	Nov 12/19
	3643	Sep 30/17		3670	Nov 12/19
	3644	Sep 30/17		3671	Nov 12/19
	3645	Sep 30/17		3672	Nov 12/19
	3646	Sep 30/17		3673	Nov 12/19
	3647	Sep 30/17		3674	Nov 12/19
	3648	Sep 30/17		3675	Nov 12/19
	3649	Sep 30/17		3676	Nov 12/19
				3677	Nov 12/19
				3678	Nov 12/19

SUBJECT.	PAGE	DATE	SUBJECT.	PAGE	DATE
	3679	Nov 12/19		3709	Nov 12/19
	3680	Nov 12/19		3710	Nov 12/19
	3681	Nov 12/19		3711	Nov 12/19
	3682	Nov 12/19		3712	Nov 12/19
	3683	Nov 12/19		3713	Nov 12/19
	3684	Nov 12/19		3714	Nov 12/19
	3685	Nov 12/19		3715	Nov 12/19
	3686	Nov 12/19		3716	Nov 12/19
	3687	Nov 12/19		3717	Nov 12/19
	3688	Nov 12/19		3718	Nov 12/19
	3689	Nov 12/19		3719	Nov 12/19
	3690	Nov 12/19		3720	Nov 12/19
	3691	Nov 12/19		3721	Nov 12/19
	3692	Nov 12/19		3722	Nov 12/19
	3693	Nov 12/19		3723	Nov 12/19
	3694	Nov 12/19		3724	Nov 12/19
	3695	Nov 12/19		3725	Nov 12/19
	3696	Nov 12/19		3726	Nov 12/19
	3697	Nov 12/19		3727	Nov 12/19
	3698	Nov 12/19		3728	Nov 12/19
	3699	Nov 12/19		3729	Nov 12/19
	3700	Nov 12/19		3730	Nov 12/19
	3701	Nov 12/19		3731	Nov 12/19
	3702	Nov 12/19		3732	Nov 12/19
	3703	Nov 12/19		3733	Nov 12/19
	3704	Nov 12/19		3734	Nov 12/19
	3705	Nov 12/19		3735	Nov 12/19
	3706	Nov 12/19		3736	Nov 12/19
	3707	Nov 12/19		3737	Nov 12/19
	3708	Nov 12/19		3738	Nov 12/19

SUBJECT.	PAGE	DATE	SUBJECT.	PAGE	DATE
	3739	Nov 12/19		3769	Nov 12/19
	3740	Nov 12/19		3770	Jul 31/15
	3741	Nov 12/19		3771	Jul 31/15
	3742	Nov 12/19		3772	Jul 31/15
	3743	Nov 12/19		3773	Jul 31/15
	3744	Nov 12/19		3774	Jul 31/15
	3745	Nov 12/19		3775	Jul 31/15
	3746	Nov 12/19		3776	Jul 31/15
	3747	Nov 12/19		3777	Jul 31/15
	3748	Nov 12/19		3778	Nov 30/16
	3749	Nov 12/19		3779	Nov 30/16
	3750	Nov 12/19		3780	Nov 30/16
	3751	Nov 12/19		3781	Nov 30/16
	3752	Nov 12/19		3782	Nov 30/16
	3753	Nov 12/19		3783	Nov 30/16
	3754	Nov 12/19		3784	Nov 30/16
	3755	Nov 12/19		3785	Nov 30/16
	3756	Nov 12/19		3786	Nov 30/16
	3757	Nov 12/19		3787	Jan 31/16
	3758	Nov 12/19		3788	Jan 31/16
	3759	Nov 12/19		3789	Jan 31/16
	3760	Nov 12/19		3790	Jan 31/16
	3761	Nov 12/19		3791	Jan 31/16
	3762	Nov 12/19		3792	Jan 31/16
	3763	Nov 12/19		3793	Sep 30/17
	3764	Nov 12/19		3794	Sep 30/17
	3765	Nov 12/19		3795	Sep 30/17
	3766	Nov 12/19		3796	Sep 30/17
	3767	Nov 12/19		3797	Sep 30/17
	3768	Nov 12/19			

SUBJECT.	PAGE	DATE	SUBJECT.	PAGE	DATE
	3798	Sep 30/17		3827	Sep 30/17
	3799	Sep 30/17		3828	Sep 30/17
	3800	Sep 30/17		3829	Jan 31/16
	3801	Sep 30/17		3830	Jan 31/16
	3802	Sep 30/17		3831	Jan 31/16
	3803	Sep 30/17		3832	Jan 31/16
	3804	Nov 12/19		3833	Jan 31/16
	3805	Nov 12/19		3834	Jan 31/16
	3806	Nov 12/19		3835	Sep 30/17
	3807	Nov 12/19		3836	Sep 30/17
	3808	Nov 12/19		3837	Sep 30/17
	3809	Nov 12/19		3838	Sep 30/17
	3810	Nov 12/19		3839	Sep 30/17
	3811	Nov 12/19		3840	Sep 30/17
	3812	Nov 12/19		3841	Sep 30/17
	3813	Nov 12/19		3842	Sep 30/17
	3814	Nov 12/19		3843	Sep 30/17
	3815	Nov 12/19		3844	Sep 30/17
	3816	Nov 12/19		3845	Sep 30/17
	3817	Nov 12/19		3846	Sep 30/17
	3818	Nov 12/19		3847	Apr 30/15
	3819	Nov 12/19		3848	Apr 30/15
	3820	Nov 12/19		3849	Apr 30/15
	3821	Sep 30/17		3850	Apr 30/15
	3822	Sep 30/17		3851	Apr 30/15
	3823	Sep 30/17		3852	Apr 30/15
	3824	Sep 30/17		3853	Apr 30/15
	3825	Sep 30/17		3854	Apr 30/15
	3826	Sep 30/17			

SUBJECT.	PAGE	DATE	SUBJECT.	PAGE	DATE
	3855	Apr 30/15		3884	Sep 30/17
	3856	Jun 30/14		3885	Sep 30/17
	3857	Jun 30/14		3886	Sep 30/17
	3858	Jun 30/14		3887	Nov 30/16
	3859	Jun 30/14		3888	Nov 30/16
	3860	Jun 30/14		3889	Nov 30/16
	3861	Jun 30/14		3890	Nov 30/16
	3862	Jun 30/15		3891	Jun 30/14
	3863	Jun 30/15		3892	Jun 30/14
	3864	Nov 30/16		3893	Jun 30/14
	3865	Nov 30/16		3894	Jun 30/14
	3866	Nov 30/16		3895	Nov 30/16
	3867	Nov 30/16		3896	Nov 30/16
	3868	Nov 30/16		3897	Nov 30/16
	3869	Nov 30/16		3898	Nov 30/16
	3870	Nov 30/16		3899	Sep 30/17
	3871	Nov 30/16		3900	Sep 30/17
	3872	Feb 29/16		3901	Sep 30/17
	3873	Feb 29/16		3902	Sep 30/17
	3874	Feb 29/16		3903	Sep 30/17
	3875	Feb 29/16		3904	Sep 30/17
	3876	Feb 29/16		3905	Sep 30/17
	3877	Feb 29/16		3906	Sep 30/17
	3878	Sep 30/17		3907	Jul 31/15
	3879	Sep 30/17		3908	Jul 31/15
	3880	Sep 30/17		3909	Jul 31/15
	3881	Sep 30/17		3910	Jul 31/15
	3882	Sep 30/17		3911	Jul 31/15
	3883	Sep 30/17		3912	Jul 31/15

SUBJECT.	PAGE	DATE	SUBJECT.	PAGE	DATE
	3913	Jul 31/15		3941	Feb 29/16
	3914	Jul 31/15		3942	Feb 29/16
	3915	Jul 31/15		3943	Feb 29/16
	3916	Jul 31/15		3944	Jan 31/16
	3917	Jul 31/15		3945	Jan 31/16
	3918	Jul 31/15		3946	Jan 31/16
	3919	Sep 30/17		3947	Jan 31/16
	3920	Sep 30/17		3948	Feb 29/16
	3921	Sep 30/17		3949	Feb 29/16
	3922	Sep 30/17		3950	Feb 29/16
	3923	Sep 30/17		3951	Feb 29/16
	3924	Sep 30/17		3952	Jun 30/14
	3925	Sep 30/17		3953	Jun 30/14
	3926	Sep 30/17		3954	Jun 30/14
	3927	Sep 30/17		3955	Jun 30/14
	3928	Sep 30/17		3956	Jun 30/14
	3929	Sep 30/17		3957	Jun 30/14
	3930	Sep 30/17		3958	Sep 30/17
	3931	Feb 29/16		3959	Sep 30/17
	3932	Feb 29/16		3960	Sep 30/17
	3933	Feb 29/16		3961	Sep 30/17
	3934	Feb 29/16		3962	Sep 30/17
	3935	Feb 29/16		3963	Sep 30/17
	3936	Feb 29/16		3964	Sep 30/17
	3937	Feb 29/16		3965	Sep 30/17
	3938	Feb 29/16		3966	Sep 30/17
	3939	Feb 29/16		3967	Sep 30/17
	3940	Feb 29/16		3968	Sep 30/17
				3969	Sep 30/17

SUBJECT.	PAGE	DATE	SUBJECT.	PAGE	DATE
	3970	Feb 29/16		3999	Sep 30/17
	3971	Feb 29/16		4000	Sep 30/17
	3972	Feb 29/16		4001	Sep 30/17
	3973	Feb 29/16		4002	Feb 29/16
	3974	Feb 29/16		4003	Feb 29/16
	3975	Feb 29/16		4004	Feb 29/16
	3976	Jun 30/14		4005	Feb 29/16
	3977	Jun 30/14		4006	Feb 29/16
	3978	Jun 30/14		4007	Feb 29/16
	3979	Sep 30/17		4008	Jul 31/15
	3980	Sep 30/17		4009	Jul 31/15
	3981	Sep 30/17		4010	Jul 31/15
	3982	Nov 30/16		4011	Jul 31/15
	3983	Nov 30/16		4012	Nov 30/16
	3984	Nov 30/16		4013	Nov 30/16
	3985	Nov 30/16		4014	Nov 30/16
	3986	Nov 30/16		4015	Nov 30/16
	3987	Nov 30/16		4016	Nov 30/16
	3988	Jun 30/14		4017	Nov 30/16
	3989	Jun 30/14		4018	Nov 30/16
	3990	Jun 30/14		4019	Nov 30/16
	3991	Jun 30/14		4020	Nov 30/16
	3992	Jun 30/14		4021	Nov 30/16
	3993	Jun 30/14		4022	Nov 30/16
	3994	Sep 30/17		4023	Nov 30/16
	3995	Sep 30/17		4024	Sep 30/17
	3996	Sep 30/17		4025	Sep 30/17
	3997	Sep 30/17		4026	Sep 30/17
	3998	Sep 30/17		4027	Sep 30/17

SUBJECT.	PAGE	DATE	SUBJECT.	PAGE	DATE
	4028	Sep 30/17		4055	Sep 30/17
	4029	Sep 30/17		4056	Sep 30/17
	4030	Sep 30/17		4057	Sep 30/17
	4031	Sep 30/17		4058	Sep 30/17
	4032	Sep 30/17		4059	Sep 30/17
	4033	Sep 30/17		4060	Sep 30/17
	4034	Sep 30/17		4061	Sep 30/17
	4035	Sep 30/17		4062	Sep 30/17
	4036	Sep 30/17		4063	Sep 30/17
	4037	Sep 30/17		4064	Sep 30/17
	4038	Sep 30/17		4065	Sep 30/17
	4039	Sep 30/17		4066	Sep 30/17
	4040	Sep 30/17		4067	Sep 30/17
	4041	Sep 30/17		4068	Sep 30/17
	4042	Sep 30/17		4069	Sep 30/17
	4043	Sep 30/17		4070	Sep 30/17
	4044	Sep 30/17		4071	Sep 30/17
	4045	Sep 30/17		4072	Sep 30/17
	4046	Sep 30/17		4073	Sep 30/17
	4047	Sep 30/17		4074	Sep 30/17
	4048	Sep 30/17		4075	Feb 29/16
	4049	Jun 30/14		4076	Feb 29/16
	4050	Jun 30/14		4077	Feb 29/16
	4051	Jun 30/14		4078	Feb 29/16
	4052	Jun 30/14		4079	Feb 29/16
	4053	Sep 30/17		4080	Feb 29/16
	4054	Sep 30/17		4081	Feb 29/16
				4082	Jun 30/14

SUBJECT.	PAGE	DATE	SUBJECT.	PAGE	DATE
	4083	Jun 30/14		4112	Jun 30/14
	4084	Jun 30/14		4113	Jun 30/14
	4085	Jun 30/14		4114	Jun 30/14
	4086	Jun 30/14		4115	Jun 30/14
	4087	Jun 30/14		4116	Nov 30/16
	4088	Jun 30/14		4117	Nov 30/16
	4089	Jun 30/14		4118	Nov 30/16
	4090	Feb 29/16		4119	Nov 30/16
	4091	Feb 29/16		4120	Nov 30/16
	4092	Feb 29/16		4121	Jan 31/16
	4093	Feb 29/16		4122	Jan 31/16
	4094	Feb 29/16		4123	Jan 31/16
	4095	Feb 29/16		4124	Jan 31/16
	4096	Apr 30/15		4125	Sep 30/17
	4097	Apr 30/15		4126	Sep 30/17
	4098	Apr 30/15		4127	Sep 30/17
	4099	Apr 30/15		4128	Sep 30/17
	4100	Apr 30/15		4129	Sep 30/17
	4101	Apr 30/15		4130	Sep 30/17
	4102	Apr 30/15		4131	Sep 30/17
	4103	Apr 30/15		4132	Sep 30/17
	4104	Jun 30/14		4133	Sep 30/17
	4105	Jun 30/14		4134	Sep 30/17
	4106	Jun 30/14		4135	Sep 30/17
	4107	Jun 30/14		4136	Sep 30/17
	4108	Jun 30/14		4137	Sep 30/17
	4109	Jun 30/14		4138	Sep 30/17
	4110	Jun 30/14		4139	Sep 30/17
	4111	Jun 30/14			

SUBJECT.	PAGE	DATE
	4140	Jun 30/15
	4141	Jun 30/15
	4142	Jun 30/15
	4143	Jun 30/15
	4144	Sep 30/17
	4145	Sep 30/17
	4146	Sep 30/17
	4147	Sep 30/17
	4148	Jun 30/14
	4149	Jun 30/14
	4150	Jun 30/14
	4151	Jun 30/14
	4152	Jun 30/14
	4153	Jun 30/14
	4154	Jun 30/14
	4155	Jun 30/14
	4156	Nov 30/16
	4157	Nov 30/16
	4158	Nov 30/16
	4159	Nov 30/16
	4160	Jan 31/16
	4161	Jan 31/16
	4162	Jan 31/16
	4163	Jan 31/16
	4164	Jan 31/16
	4165	Sep 30/17
	4166	Sep 30/17
	4167	Sep 30/17
	4168	Sep 30/17

SUBJECT.	PAGE	DATE
	4169	Sep 30/17
	4170	Sep 30/17
	4171	Sep 30/17
	4172	Sep 30/17
	4173	Sep 30/17
	4174	Apr 30/15
	4175	Apr 30/15
	4176	Apr 30/15
	4177	Jun 30/14
	4178	Jun 30/14
	4179	Jun 30/14
	4180	Jun 30/14
	4181	Jun 30/14
	4182	Jun 30/14
	4183	Jun 30/14
	4184	Jun 30/14
	4185	Sep 30/17
	4186	Sep 30/17
	4187	Sep 30/17
	4188	Sep 30/17
	4189	Sep 30/17
	4190	Sep 30/17
	4191	Sep 30/17
	4192	Sep 30/17
	4193	Sep 30/17
	4194	Sep 30/17
	4195	Sep 30/17
	4196	Sep 30/17

SUBJECT.	PAGE	DATE
	4197	Sep 30/17
	4198	Sep 30/17
	4199	Sep 30/17
	4200	Sep 30/17
	4201	Sep 30/17
	4202	Sep 30/17
	4203	Sep 30/17
	4204	Sep 30/17
	4205	Sep 30/17
	4206	Sep 30/17
	4207	Sep 30/17
	4208	Sep 30/17
	4209	Sep 30/17
	4210	Sep 30/17
	4211	Sep 30/17
	4212	Sep 30/17
	4213	Sep 30/17
	4214	Sep 30/17
	4215	Sep 30/17
	4216	Sep 30/17
	4217	Jun 30/14
	4218	Jun 30/14
	4219	Jun 30/14
	4220	Jun 30/14
	4221	Jun 30/14
	4222	Jun 30/14
	4223	Jun 30/14
	4224	Jun 30/14

SUBJECT.	PAGE	DATE
	4225	Jun 30/14
	4226	Jun 30/14
	4227	Jun 30/14
	4228	Nov 30/16
	4229	Nov 30/16
	4230	Nov 30/16
	4231	Nov 30/16
	4232	Nov 30/16
	4233	Nov 30/16
	4234	Nov 30/16
	4235	Nov 30/16
	4236	Nov 30/16
	4237	Nov 30/16
	4238	Feb 29/16
	4239	Feb 29/16
	4240	Feb 29/16
	4241	Feb 29/16
	4242	Feb 29/16
	4243	Feb 29/16
	4244	Feb 29/16
	4245	Feb 29/16
	4246	Feb 29/16
	4247	Feb 29/16
	4248	Feb 29/16
	4249	Feb 29/16
	4250	Feb 29/16
	4251	Feb 29/16
	4252	Feb 29/16
	4253	Feb 29/16
	4254	Feb 29/16

SUBJECT.	PAGE	DATE	SUBJECT.	PAGE	DATE
	4255	Feb 29/16		4285	Nov 12/19
	4256	Feb 29/16		4286	Nov 12/19
	4257	Feb 29/16		4287	Nov 12/19
	4258	Feb 29/16		4288	Nov 12/19
	4259	Jan 31/16		4289	Nov 12/19
	4260	Jan 31/16		4290	Nov 12/19
	4261	Jan 31/16		4291	Nov 12/19
	4262	Jan 31/16		4292	Nov 12/19
	4263	Jan 31/16		4293	Nov 12/19
	4264	Jun 30/14		4294	Nov 12/19
	4265	Jun 30/14		4295	Nov 12/19
	4266	Jun 30/14		4296	Nov 12/19
	4267	Jun 30/14		4297	Nov 12/19
	4268	Jun 30/14		4298	Nov 12/19
	4269	Jun 30/14		4299	Feb 29/16
	4270	Jun 30/14		4300	Feb 29/16
	4271	Jun 30/14		4301	Feb 29/16
	4272	Jun 30/14		4302	Feb 29/16
	4273	Jun 30/14		4303	Feb 29/16
	4274	Jun 30/14		4304	Feb 29/16
	4275	Jun 30/14		4305	Feb 29/16
	4276	Nov 12/19		4306	Feb 29/16
	4277	Nov 12/19		4307	Feb 29/16
	4278	Nov 12/19		4308	Feb 29/16
	4279	Nov 12/19		4309	Feb 29/16
	4280	Nov 12/19		4310	Jun 30/14
	4281	Nov 12/19		4311	Jun 30/14
	4282	Nov 12/19		4312	Jun 30/14
	4283	Nov 12/19		4313	Jul 31/15
	4284	Nov 12/19		4314	Jul 31/15

SUBJECT.	PAGE	DATE	SUBJECT.	PAGE	DATE
	4315	Jul 31/15		4344	Jul 31/15
	4316	Jul 31/15		4345	Jul 31/15
	4317	Jul 31/15		4346	Jul 31/15
	4318	Jul 31/15		4347	Jun 30/14
	4319	Jul 31/15		4348	Jun 30/14
	4320	Jul 31/15		4349	Jun 30/14
	4321	Jul 31/15		4350	Jun 30/14
	4322	Jul 31/15		4351	Jun 30/14
	4323	Jun 30/14		4352	Nov 30/16
	4324	Jun 30/14		4353	Nov 30/16
	4325	Jun 30/14		4354	Nov 30/16
	4326	Jun 30/14		4355	Nov 30/16
	4327	Jun 30/14		4356	Nov 30/16
	4328	Jun 30/14		4357	Nov 30/16
	4329	Jun 30/14		4358	Nov 30/16
	4330	Jun 30/14		4359	Nov 30/16
	4331	Jun 30/14		4360	Nov 30/16
	4332	Jun 30/14		4361	Sep 30/17
	4333	Nov 30/16		4362	Sep 30/17
	4334	Nov 30/16		4363	Sep 30/17
	4335	Nov 30/16		4364	Sep 30/17
	4336	Nov 30/16		4365	Sep 30/17
	4337	Sep 30/17		4366	Sep 30/17
	4338	Sep 30/17		4367	Sep 30/17
	4339	Sep 30/17		4368	Sep 30/17
	4340	Sep 30/17		4369	Sep 30/17
	4341	Sep 30/17		4370	Sep 30/17
	4342	Sep 30/17		4371	Sep 30/17
	4343	Sep 30/17		4372	Sep 30/17

SUBJECT.	PAGE	DATE
	4373	Nov 30/16
	4374	Nov 30/16
	4375	Nov 30/16
	4376	Nov 30/16
	4377	Nov 30/16
	4378	Nov 30/16
	4379	Nov 30/16
	4380	Nov 30/16
	4381	Jun 30/14
	4382	Jun 30/14
	4383	Jun 30/14
	4384	Jun 30/14
	4385	Jun 30/14
	4386	Jun 30/14
	4387	Jun 30/14
	4388	Jun 30/14
	4389	Jun 30/14
	4390	Jun 30/14
	4391	Jun 30/14
	4392	Sep 30/17
	4393	Sep 30/17
	4394	Sep 30/17
	4395	Sep 30/17
	4396	Sep 30/17
	4397	Sep 30/17
	4398	Sep 30/17
	4399	Sep 30/17
	4400	Sep 30/17
	4401	Sep 30/17

SUBJECT.	PAGE	DATE
	4402	Sep 30/17
	4403	Sep 30/17
	4404	Sep 30/17
	4405	Sep 30/17
	4406	Sep 30/17
	4407	Jun 30/14
	4408	Jun 30/14
	4409	Jun 30/14
	4410	Jun 30/14
	4411	Jun 30/14
	4412	Jun 30/14
	4413	Jun 30/14
	4414	Feb 29/16
	4415	Feb 29/16
	4416	Feb 29/16
	4417	Feb 29/16
	4418	Feb 29/16
	4419	Feb 29/16
	4420	Nov 30/16
	4421	Nov 30/16
	4422	Nov 30/16
	4423	Nov 30/16
	4424	Nov 30/16
	4425	Nov 30/16
	4426	Nov 30/16
	4427	Nov 30/16
	4428	Jun 30/14
	4429	Jun 30/14
	4430	Jun 30/14

SUBJECT.	PAGE	DATE	SUBJECT.	PAGE	DATE
	4431	Jun 30/14		4460	Sep 30/17
	4432	Jun 30/14		4461	Sep 30/17
	4433	Jun 30/14		4462	Sep 30/17
	4434	Jun 30/14		4463	Sep 30/17
	4435	Jun 30/14		4464	Sep 30/17
	4436	Jun 30/14		4465	Sep 30/17
	4437	Jun 30/14		4466	Sep 30/17
	4438	Jun 30/14		4467	Sep 30/17
	4439	Jun 30/14		4468	Sep 30/17
	4440	Jun 30/14		4469	Jun 30/15
	4441	Jun 30/14		4470	Jun 30/15
	4442	Jun 30/14		4471	Jun 30/15
	4443	Nov 30/16		4472	Sep 30/17
	4444	Nov 30/16		4473	Sep 30/17
	4445	Nov 30/16		4474	Sep 30/17
	4446	Nov 30/16		4475	Sep 30/17
	4447	Nov 30/16		4476	Jun 30/14
	4448	Nov 30/16		4477	Jun 30/14
	4449	Nov 30/16		4478	Nov 30/16
	4450	Nov 30/16		4479	Nov 30/16
	4451	Nov 30/16		4480	Nov 30/16
	4452	Jun 30/14		4481	Nov 30/16
	4453	Jun 30/14		4482	Nov 30/16
	4454	Jun 30/14		4483	Nov 30/16
	4455	Sep 30/17		4484	Nov 30/16
	4456	Sep 30/17		4485	Nov 30/16
	4457	Sep 30/17		4486	Nov 30/16
	4458	Sep 30/17		4487	Nov 30/16
	4459	Sep 30/17			

SUBJECT.	PAGE	DATE	SUBJECT.	PAGE	DATE
	4488	Nov 30/16		4518	Jan 31/16
	4489	Nov 30/16		4519	Nov 30/16
	4490	Nov 30/16		4520	Nov 30/16
	4491	Nov 30/16		4521	Nov 30/16
	4492	Nov 30/16		4522	Nov 30/16
	4493	Nov 30/16		4523	Nov 30/16
	4494	Nov 30/16		4524	Nov 30/16
	4495	Nov 30/16		4525	Nov 30/16
	4496	Nov 30/16		4526	Nov 30/16
	4497	Nov 30/16		4527	Nov 30/16
	4498	Nov 30/16		4528	Nov 30/16
	4499	Nov 30/16		4529	Nov 30/16
	4500	Nov 30/16		4530	Nov 30/16
	4501	Jul 31/15		4531	Nov 30/16
	4502	Jul 31/15		4532	Nov 30/16
	4503	Jul 31/15		4533	Nov 30/16
	4504	Jul 31/15		4534	Nov 30/16
	4505	Jul 31/15		4535	Nov 30/16
	4506	Jul 31/15		4536	Nov 30/16
	4507	Jul 31/15		4537	Nov 30/16
	4508	Jul 31/15		4538	Nov 30/16
	4509	Jul 31/15		4539	Nov 30/16
	4510	Jul 31/15		4540	Jan 31/16
	4511	Jan 31/16		4541	Jan 31/16
	4512	Jan 31/16		4542	Jan 31/16
	4513	Jan 31/16		4543	Jan 31/16
	4514	Jan 31/16		4544	Jan 31/16
	4515	Jan 31/16		4545	Jan 31/16
	4516	Jan 31/16		4546	Sep 30/17
	4517	Jan 31/16			

SUBJECT.	PAGE	DATE	SUBJECT.	PAGE	DATE
	4547	Sep 30/17		4575	Sep 30/17
	4548	Sep 30/17		4576	Sep 30/17
	4549	Sep 30/17		4577	Sep 30/17
	4550	Sep 30/17		4578	Sep 30/17
	4551	Sep 30/17		4579	Jun 30/14
	4552	Sep 30/17		4580	Jun 30/14
	4553	Sep 30/17		4581	Jun 30/14
	4554	Sep 30/17		4582	Sep 30/17
	4555	May 31/17		4583	Sep 30/17
	4556	May 31/17		4584	Sep 30/17
	4557	May 31/17		4585	Sep 30/17
	4558	May 31/17		4586	Sep 30/17
	4559	Jun 30/14		4587	Sep 30/17
	4560	Jun 30/14		4588	Sep 30/17
	4561	Jun 30/14		4589	Jan 31/16
	4562	Jun 30/14		4590	Jan 31/16
	4563	Jun 30/14		4591	Jan 31/16
	4564	Jun 30/14		4592	Jan 31/16
	4565	Jun 30/14		4593	Jan 31/16
	4566	Jun 30/14		4594	Jan 31/16
	4567	Jun 30/14		4595	Jan 31/16
	4568	Jun 30/14		4596	Sep 30/17
	4569	Jun 30/14		4597	Sep 30/17
	4570	Jun 30/14		4598	Sep 30/17
	4571	Jun 30/14		4599	Sep 30/17
	4572	Sep 30/17		4600	Sep 30/17
	4573	Sep 30/17		4601	Sep 30/17
	4574	Sep 30/17		4602	Sep 30/17

SUBJECT.	PAGE	DATE	SUBJECT.	PAGE	DATE
	4603	Sep 30/17		4631	Sep 30/17
	4604	Sep 30/17		4632	Jun 30/14
	4605	Sep 30/17		4633	Jun 30/14
	4606	Jul 31/15		4634	Jun 30/14
	4607	Jul 31/15		4635	Jun 30/14
	4608	Jul 31/15		4636	Jun 30/14
	4609	Jul 31/15		4637	Jun 30/14
	4610	Jul 31/15		4638	Jun 30/14
	4611	Sep 30/17		4639	Jun 30/14
	4612	Sep 30/17		4640	Feb 29/16
	4613	Sep 30/17		4641	Feb 29/16
	4614	Sep 30/17		4642	Feb 29/16
	4615	Sep 30/17		4643	Feb 29/16
	4616	Sep 30/17		4644	Feb 29/16
	4617	Sep 30/17		4645	Feb 29/16
	4618	Sep 30/17		4646	Feb 29/16
	4619	Sep 30/17		4647	Feb 29/16
	4620	Sep 30/17		4648	Jun 30/14
	4621	Sep 30/17		4649	Jun 30/14
	4622	Sep 30/17		4650	Jun 30/14
	4623	Sep 30/17		4651	Jun 30/14
	4624	Sep 30/17		4652	Nov 30/16
	4625	Sep 30/17		4653	Nov 30/16
	4626	Sep 30/17		4654	Nov 30/16
	4627	Sep 30/17		4655	Nov 30/16
	4628	Sep 30/17		4656	Nov 30/16
	4629	Sep 30/17		4657	Nov 30/16
	4630	Sep 30/17		4658	Sep 30/17
				4659	Sep 30/17

SUBJECT.	PAGE	DATE	SUBJECT.	PAGE	DATE
	4660	Sep 30/17		4688	Sep 30/17
	4661	Sep 30/17		4689	Sep 30/17
	4662	May 31/17		4690	Sep 30/17
	4663	May 31/17		4691	Sep 30/17
	4664	May 31/17		4692	Sep 30/17
	4665	Sep 30/17		4693	Sep 30/17
	4666	Sep 30/17		4694	Sep 30/17
	4667	Sep 30/17		4695	Sep 30/17
	4668	Sep 30/17		4696	Sep 30/17
	4669	Sep 30/17		4697	Sep 30/17
	4670	Feb 29/16		4698	Sep 30/17
	4671	Feb 29/16		4699	Sep 30/17
	4672	Feb 29/16		4700	Sep 30/17
	4673	Feb 29/16		4701	Jun 30/14
	4674	Sep 30/17		4702	Jun 30/14
	4675	Sep 30/17		4703	Jul 31/16
	4676	Sep 30/17		4704	Jul 31/16
	4677	Sep 30/17		4705	Jul 31/16
	4678	Sep 30/17		4706	Jul 31/16
	4679	Sep 30/17		4707	Jul 31/16
	4680	Nov 30/14		4708	Jul 31/16
	4681	Nov 30/14		4709	Jul 31/16
	4682	Sep 30/17		4710	Jul 31/16
	4683	Sep 30/17		4711	Jul 31/16
	4684	Sep 30/17		4712	Jul 31/16
	4685	Sep 30/17		4713	Jan 31/16
	4686	Sep 30/17		4714	Jan 31/16
	4687	Sep 30/17		4715	Jan 31/16

SUBJECT.	PAGE	DATE	SUBJECT.	PAGE	DATE
	4716	Jan 31/16		4744	Sep 30/17
	4717	Jan 31/16		4745	Sep 30/17
	4718	Jan 31/16		4746	Sep 30/17
	4719	Jan 31/16		4747	Sep 30/17
	4720	Jan 31/16		4748	Sep 30/17
	4721	Jan 31/16		4749	Sep 30/17
	4722	Jan 31/16		4750	Sep 30/17
	4723	Jan 31/16		4751	Sep 30/17
	4724	Jan 31/16		4752	Sep 30/17
	4725	Jan 31/16		4753	Jan 31/16
	4726	Jan 31/16		4754	Jan 31/16
	4727	Jan 31/16		4755	Jan 31/16
	4728	Jan 31/16		4756	Jan 31/16
	4729	Jan 31/16		4757	Jan 31/16
	4730	Sep 30/17		4758	Jan 31/16
	4731	Sep 30/17		4759	Jan 31/16
	4732	Sep 30/17		4760	Jan 31/16
	4733	Sep 30/17		4761	Jan 31/16
	4734	Sep 30/17		4762	Jan 31/16
	4735	Sep 30/17		4763	Jan 31/16
	4736	Sep 30/17		4764	Jan 31/16
	4737	Sep 30/17		4765	Jan 31/16
	4738	Sep 30/17		4766	Jan 31/16
	4739	Sep 30/17		4767	Sep 30/17
	4740	Sep 30/17		4768	Sep 30/17
	4741	Sep 30/17		4769	Sep 30/17
	4742	Sep 30/17		4770	Sep 30/17
	4743	Sep 30/17		4771	Sep 30/17

SUBJECT.	PAGE	DATE	SUBJECT.	PAGE	DATE
	4772	Sep 30/17		4801	Jan 31/16
	4773	Sep 30/17		4802	Jan 31/16
	4774	Jul 31/15		4803	Jan 31/16
	4775	Jul 31/15		4804	Feb 29/16
	4776	Jul 31/15		4805	Feb 29/16
	4777	Jul 31/15		4806	Feb 29/16
	4778	Jul 31/15		4807	Feb 29/16
	4779	Jul 31/15		4808	Feb 29/16
	4780	Jul 31/15		4809	Feb 29/16
	4781	Jul 31/15		4810	Feb 29/16
	4782	Jul 31/15		4811	Feb 29/16
	4783	Jul 31/15		4812	Feb 29/16
	4784	Jul 31/15		4813	Feb 29/16
	4785	Jul 31/15		4814	Feb 29/16
	4786	Jul 31/15		4815	Feb 29/16
	4787	Jul 31/15		4816	Feb 29/16
	4788	Jul 31/15		4817	Feb 29/16
	4789	Jul 31/15		4818	Feb 29/16
	4790	Jul 31/15		4819	Feb 29/16
	4791	Jul 31/15		4820	Feb 29/16
	4792	Jan 31/16		4821	Sep 30/17
	4793	Jan 31/16		4822	Sep 30/17
	4794	Jan 31/16		4823	Sep 30/17
	4795	Jan 31/16		4824	Sep 30/17
	4796	Jan 31/16		4825	Sep 30/17
	4797	Jan 31/16		4826	Sep 30/17
	4798	Jan 31/16		4827	Sep 30/17
	4799	Jan 31/16		4828	Sep 30/17
	4800	Jan 31/16		4829	Sep 30/17

SUBJECT.	PAGE	DATE	SUBJECT.	PAGE	DATE
	4830	Sep 30/17		4859	Feb 29/16
	4831	Sep 30/17		4860	Feb 29/16
	4832	Sep 30/17		4861	Feb 29/16
	4833	Sep 30/17		4862	Feb 29/16
	4834	Sep 30/17		4863	Feb 29/16
	4835	Sep 30/17		4864	Feb 29/16
	4836	Sep 30/17		4865	Feb 29/16
	4837	Sep 30/17		4866	Feb 29/16
	4838	Sep 30/17		4867	Feb 29/16
	4839	Jan 31/16		4868	Feb 29/16
	4840	Jan 31/16		4869	Feb 29/16
	4841	Jan 31/16		4870	Feb 29/16
	4842	Jan 31/16		4871	Feb 29/16
	4843	Jan 31/16		4872	Feb 29/16
	4844	Jan 31/16		4873	Feb 29/16
	4845	Jan 31/16		4874	Feb 29/16
	4846	Jan 31/16		4875	Feb 29/16
	4847	Jan 31/16		4876	Feb 29/16
	4848	Jan 31/16		4877	Feb 29/16
	4849	Jan 31/16		4878	Feb 29/16
	4850	Jan 31/16		4879	Feb 29/16
	4851	Jan 31/16		4880	Feb 29/16
	4852	Jan 31/16		4881	Feb 29/16
	4853	Jan 31/16		4882	Feb 29/16
	4854	Jan 31/16		4883	Feb 29/16
	4855	Jan 31/16		4884	Feb 29/16
	4856	Jan 31/16		4885	Feb 29/16
	4857	Jan 31/16		4886	Feb 29/16
	4858	Jan 31/16		4887	Feb 29/16
				4888	Feb 29/16

SUBJECT.	PAGE	DATE	SUBJECT.	PAGE	DATE
	4889	Feb 29/16		4919	Nov 30/16
	4890	Feb 29/16		4920	Nov 30/16
	4891	Feb 29/16		4921	Nov 30/16
	4892	Feb 29/16		4922	Nov 30/16
	4893	Feb 29/16		4923	Nov 30/16
	4894	Feb 29/16		4924	Nov 30/16
	4895	Feb 29/16		4925	Nov 30/16
	4896	Feb 29/16		4926	Nov 30/16
	4897	Feb 29/16		4927	Nov 30/16
	4898	Feb 29/16		4928	Nov 30/16
	4899	Feb 29/16		4929	Jan 31/16
	4900	Feb 29/16		4930	Jan 31/16
	4901	Feb 29/16		4931	Jan 31/16
	4902	Feb 29/16		4932	Jan 31/16
	4903	Feb 29/16		4933	Jan 31/16
	4904	Feb 29/16		4934	Jan 31/16
	4905	Feb 29/16		4935	Jan 31/16
	4906	Feb 29/16		4936	Jan 31/16
	4907	Feb 29/16		4937	Jan 31/16
	4908	Feb 29/16		4938	Jan 31/16
	4909	Feb 29/16		4939	Jan 31/16
	4910	Feb 29/16		4940	Jan 31/16
	4911	Feb 29/16		4941	Jan 31/16
	4912	Feb 29/16		4942	Jan 31/16
	4913	Feb 29/16		4943	Jan 31/16
	4914	Feb 29/16		4944	Jan 31/16
	4915	Feb 29/16		4945	Jan 31/16
	4916	Feb 29/16		4946	Jan 31/16
	4917	Feb 29/16		4947	Jan 31/16
	4918	Nov 30/16		4948	Jan 31/16

SUBJECT.	PAGE	DATE
	4949	Jan 31/16
	4950	Jan 31/16
	4951	Jan 31/16
	4952	Jan 31/16
	4953	Jan 31/16
	4954	Jan 31/16
	4955	Jan 31/16
	4956	Jan 31/16
	4957	Jan 31/16
	4958	Jan 31/16
	4959	Jan 31/16
	4960	Jan 31/16
	4961	Jan 31/16
	4962	Jan 31/16
	4963	Jan 31/16
	4964	Jan 31/16
	4965	Sep 30/17
	4966	Sep 30/17
	4967	Sep 30/17
	4968	Sep 30/17
	4969	Sep 30/17
	4970	Sep 30/17
	4971	Sep 30/17
	4972	Sep 30/17
	4973	Sep 30/17
	4974	Sep 30/17
	4975	Sep 30/17
	4976	Sep 30/17
CLEANING	4001	Apr 30/15
	4002	Jun 30/14
	4003	Jun 30/14
	4004	Jun 30/14
	4005	Jun 30/14
	4006	Jun 30/14
	4007	Jun 30/14
	4008	Jun 30/14
	4009	Jun 30/14
	4010	Jun 30/14
	4011	Jun 30/14
	4012	Jun 30/14
	4013	Jun 30/14
	4014	Jun 30/14
	4015	Jun 30/14
	4016	Jun 30/14
INSPECTION/ CHECK	5001	Apr 30/15
	5002	Jun 30/14
	5003	Jun 30/14
	5004	Jun 30/14
	5005	Jun 30/14
	5006	Jun 30/14
	5007	Jun 30/14
	5008	Jun 30/14
	5009	Jun 30/14
	5010	Jun 30/14
	5011	Jun 30/14
	5012	Jun 30/14
	5013	Jun 30/14

SUBJECT.	PAGE	DATE
	5014	Jun 30/14
	5015	Jun 30/14
	5016	Jun 30/14
	5017	Jun 30/14
	5018	Jun 30/14
	5019	Jun 30/14
	5020	Jun 30/14
	5021	Jun 30/14
	5022	Jun 30/14
	5023	Jun 30/14
	5024	Jun 30/14
REPAIR	6001	Apr 30/15
	6002	Sep 30/17
	6003	Sep 30/17
	6004	Sep 30/17
	6005	Sep 30/17
	6006	Sep 30/17
	6007	Sep 30/17
	6008	Sep 30/17
	6009	Sep 30/17
	6010	Sep 30/17
	6011	Sep 30/17
	6012	Sep 30/17
	6013	Sep 30/17
	6014	Sep 30/17
	6015	Jun 30/14
	6016	Jun 30/14
	6017	Jun 30/14
	6018	Jun 30/14
	6019	Jun 30/14
	6020	Jun 30/14
	6021	Jun 30/14
	6022	Jun 30/14
	6023	Jun 30/14
	6024	Jun 30/14
	6025	Jun 30/14
	6026	Jun 30/14
	6027	Jun 30/14
	6028	Jun 30/14
	6029	Jun 30/14
	6030	Jun 30/14
	6031	Jun 30/14
	6032	Jun 30/14
	6033	Jun 30/14
	6034	Jun 30/14
	6035	Jun 30/14
	6036	Jun 30/14
	6037	Jun 30/14
	6038	Jun 30/14
	6039	Jun 30/14
	6040	Jun 30/14
	6041	Jun 30/14
	6042	Jun 30/14
	6043	Jun 30/14
	6044	Jun 30/14
	6045	Jun 30/14
	6046	Jun 30/14
	6047	Jun 30/14

SUBJECT.	PAGE	DATE	SUBJECT.	PAGE	DATE
	6048	Jun 30/14		6078	Jun 30/14
	6049	Jun 30/14		6079	Jun 30/14
	6050	Jun 30/14		6080	Jun 30/14
	6051	Jun 30/14		6081	Jun 30/14
	6052	Jun 30/14		6082	Jun 30/14
	6053	Jun 30/14		6083	Jun 30/14
	6054	Jun 30/14		6084	Jun 30/14
	6055	Jun 30/14		6085	Jun 30/14
	6056	Jun 30/14		6086	Jun 30/14
	6057	Jun 30/14		6087	Jun 30/14
	6058	Jun 30/14		6088	Jun 30/14
	6059	Jun 30/14		6089	Jun 30/14
	6060	Jun 30/14		6090	Jun 30/14
	6061	Jun 30/14		6091	Jun 30/14
	6062	Jun 30/14		6092	Jun 30/14
	6063	Jun 30/14		6093	Jun 30/14
	6064	Jun 30/14		6094	Jun 30/14
	6065	Jun 30/14		6095	Jun 30/14
	6066	Jun 30/14		6096	Jun 30/14
	6067	Jun 30/14		6097	Jun 30/14
	6068	Jun 30/14		6098	Jun 30/14
	6069	Jun 30/14		6099	Jun 30/14
	6070	Jun 30/14		6100	Jun 30/14
	6071	Jun 30/14		6101	Jun 30/14
	6072	Jun 30/14		6102	Jun 30/14
	6073	Jun 30/14		6103	Jun 30/14
	6074	Jun 30/14		6104	Jun 30/14
	6075	Jun 30/14		6105	Jun 30/14
	6076	Jun 30/14		6106	Jun 30/14
	6077	Jun 30/14		6107	Jun 30/14

SUBJECT.	PAGE	DATE
	6108	Jun 30/14
	6109	Jun 30/14
	6110	Jun 30/14
	6111	Jun 30/14
	6112	Jun 30/14
	6113	Jun 30/14
	6114	Jun 30/14
	6115	Jun 30/14
	6116	Jun 30/14
	6117	Jun 30/14
	6118	Jun 30/14
	6119	Jun 30/14
	6120	Jun 30/14
	6121	Jun 30/14
	6122	Jun 30/14
	6123	Jun 30/14
	6124	Jun 30/14
	6125	Jun 30/14
	6126	Jun 30/14
	6127	Jun 30/14
	6128	Jun 30/14
	6129	Jun 30/14
	6130	Jun 30/14
	6131	Jun 30/14
	6132	Jun 30/14
	6133	Jun 30/14
	6134	Jun 30/14
ASSEMBLY	7001	Nov 30/16
	7002	Nov 30/16
	7003	Nov 30/16
	7004	Nov 30/16
	7005	Sep 30/17
	7006	Sep 30/17
	7007	Sep 30/17
	7008	Sep 30/17
	7009	May 31/17
	7010	May 31/17
	7011	May 31/17
	7012	Sep 30/17
	7013	Sep 30/17
	7014	Sep 30/17
	7015	Sep 30/17
	7016	Sep 30/17
	7017	Feb 29/16
	7018	Feb 29/16
	7019	Feb 29/16
	7020	Feb 29/16
	7021	Sep 30/17
	7022	Sep 30/17
	7023	Sep 30/17
	7024	Sep 30/17
	7025	Sep 30/17
	7026	Nov 30/14
	7027	Nov 30/14
	7028	Nov 30/16
	7029	Nov 30/16
	7030	Nov 30/16
	7031	Nov 30/16

SUBJECT.	PAGE	DATE	SUBJECT.	PAGE	DATE
	7032	Nov 30/16		7062	Jan 31/16
	7033	Nov 30/16		7063	Jan 31/16
	7034	Nov 30/16		7064	Jan 31/16
	7035	Nov 30/16		7065	Jan 31/16
	7036	Nov 30/16		7066	Nov 30/16
	7037	Nov 30/16		7067	Nov 30/16
	7038	Nov 30/16		7068	Nov 30/16
	7039	Nov 30/16		7069	Nov 30/16
	7040	Nov 30/16		7070	Nov 30/16
	7041	Nov 30/16		7071	Nov 30/16
	7042	Nov 30/16		7072	Nov 30/16
	7043	Nov 30/16		7073	Nov 30/16
	7044	Nov 30/16		7074	Nov 30/16
	7045	Nov 30/16		7075	Nov 30/16
	7046	Nov 30/16		7076	Nov 30/16
	7047	Nov 30/16		7077	Nov 30/16
	7048	Nov 30/16		7078	Nov 30/16
	7049	Jul 31/15		7079	Nov 30/16
	7050	Jul 31/15		7080	Nov 30/16
	7051	Jul 31/15		7081	Nov 30/16
	7052	Jul 31/15		7082	Nov 30/16
	7053	Jul 31/15		7083	Jan 31/16
	7054	Jul 31/15		7084	Jan 31/16
	7055	Jul 31/15		7085	Jan 31/16
	7056	Jul 31/15		7086	Jan 31/16
	7057	Jul 31/15		7087	Jan 31/16
	7058	Jan 31/16		7088	Jan 31/16
	7059	Jan 31/16		7089	Sep 30/17
	7060	Jan 31/16		7090	Sep 30/17
	7061	Jan 31/16			

SUBJECT.	PAGE	DATE	SUBJECT.	PAGE	DATE
	7091	Sep 30/17		7119	Jun 30/14
	7092	Sep 30/17		7120	Jun 30/14
	7093	Sep 30/17		7121	Jun 30/14
	7094	Sep 30/17		7122	Sep 30/17
	7095	Sep 30/17		7123	Sep 30/17
	7096	Sep 30/17		7124	Sep 30/17
	7097	May 31/17		7125	Sep 30/17
	7098	May 31/17		7126	Sep 30/17
	7099	May 31/17		7127	Sep 30/17
	7100	May 31/17		7128	Jan 31/16
	7101	Jun 30/14		7129	Jan 31/16
	7102	Jun 30/14		7130	Jan 31/16
	7103	Jun 30/14		7131	Jan 31/16
	7104	Jun 30/14		7132	Jan 31/16
	7105	Jun 30/14		7133	Sep 30/17
	7106	Jun 30/14		7134	Sep 30/17
	7107	Jun 30/14		7135	Sep 30/17
	7108	Jun 30/14		7136	Sep 30/17
	7109	Jun 30/14		7137	Sep 30/17
	7110	Jun 30/14		7138	Sep 30/17
	7111	Jun 30/14		7139	Sep 30/17
	7112	Sep 30/17		7140	Sep 30/17
	7113	Sep 30/17		7141	Sep 30/17
	7114	Sep 30/17		7142	Jul 31/15
	7115	Sep 30/17		7143	Jul 31/15
	7116	Sep 30/17		7144	Jul 31/15
	7117	Sep 30/17		7145	Jul 31/15
	7118	Sep 30/17		7146	Jul 31/15

SUBJECT.	PAGE	DATE	SUBJECT.	PAGE	DATE
	7147	Sep 30/17		7175	Feb 29/16
	7148	Sep 30/17		7176	Feb 29/16
	7149	Sep 30/17		7177	Feb 29/16
	7150	Sep 30/17		7178	Jun 30/14
	7151	Sep 30/17		7179	Jun 30/14
	7152	Sep 30/17		7180	Jun 30/14
	7153	Sep 30/17		7181	Jun 30/14
	7154	Sep 30/17		7182	Nov 30/16
	7155	Sep 30/17		7183	Nov 30/16
	7156	Sep 30/17		7184	Nov 30/16
	7157	Sep 30/17		7185	Nov 30/16
	7158	Sep 30/17		7186	Nov 30/16
	7159	Sep 30/17		7187	Jun 30/14
	7160	Sep 30/17		7188	Jun 30/14
	7161	Sep 30/17		7189	Jun 30/14
	7162	Sep 30/17		7190	Sep 30/17
	7163	Sep 30/17		7191	Sep 30/17
	7164	Jun 30/14		7192	Sep 30/17
	7165	Jun 30/14		7193	Sep 30/17
	7166	Jun 30/14		7194	Sep 30/17
	7167	Jun 30/14		7195	Sep 30/17
	7168	Jun 30/14		7196	Sep 30/17
	7169	Jun 30/14		7197	Sep 30/17
	7170	Jun 30/14		7198	Sep 30/17
	7171	Feb 29/16		7199	Sep 30/17
	7172	Feb 29/16		7200	Sep 30/17
	7173	Feb 29/16		7201	Jun 30/15
	7174	Feb 29/16		7202	Jun 30/15
				7203	Jun 30/15

SUBJECT.	PAGE	DATE	SUBJECT.	PAGE	DATE
	7204	Sep 30/17		7233	Sep 30/17
	7205	Sep 30/17		7234	Sep 30/17
	7206	Sep 30/17		7235	Sep 30/17
	7207	Sep 30/17		7236	Sep 30/17
	7208	Jun 30/14		7237	Sep 30/17
	7209	Jun 30/14		7238	Sep 30/17
	7210	Nov 30/16		7239	Sep 30/17
	7211	Nov 30/16		7240	Jun 30/14
	7212	Nov 30/16		7241	Jun 30/14
	7213	Nov 30/16		7242	Jun 30/14
	7214	Nov 30/16		7243	Jun 30/14
	7215	Nov 30/16		7244	Jun 30/14
	7216	Nov 30/16		7245	Jun 30/14
	7217	Jun 30/14		7246	Feb 29/16
	7218	Jun 30/14		7247	Feb 29/16
	7219	Jun 30/14		7248	Feb 29/16
	7220	Jun 30/14		7249	Feb 29/16
	7221	Jun 30/14		7250	Feb 29/16
	7222	Jun 30/14		7251	Nov 30/16
	7223	Jun 30/14		7252	Nov 30/16
	7224	Jun 30/14		7253	Nov 30/16
	7225	Jun 30/14		7254	Nov 30/16
	7226	Jun 30/14		7255	Nov 30/16
	7227	Sep 30/17		7256	Nov 30/16
	7228	Sep 30/17		7257	Jun 30/14
	7229	Sep 30/17		7258	Jun 30/14
	7230	Sep 30/17		7259	Jun 30/14
	7231	Sep 30/17		7260	Jun 30/14
	7232	Sep 30/17		7261	Jun 30/14

SUBJECT.	PAGE	DATE
	7262	Jun 30/14
	7263	Jun 30/14
	7264	Jun 30/14
	7265	Jun 30/14
	7266	Jun 30/14
	7267	Jun 30/14
	7268	Jun 30/14
	7269	Jun 30/14
	7270	Nov 30/16
	7271	Nov 30/16
	7272	Nov 30/16
	7273	Nov 30/16
	7274	Nov 30/16
	7275	Nov 30/16
	7276	Nov 30/16
	7277	Sep 30/17
	7278	Sep 30/17
	7279	Sep 30/17
	7280	Sep 30/17
	7281	Sep 30/17
	7282	Sep 30/17
	7283	Sep 30/17
	7284	Sep 30/17
	7285	Sep 30/17
	7286	Nov 30/16
	7287	Nov 30/16
	7288	Nov 30/16
	7289	Sep 30/17
	7290	Sep 30/17

SUBJECT.	PAGE	DATE
	7291	Sep 30/17
	7292	Sep 30/17
	7293	Sep 30/17
	7294	Sep 30/17
	7295	Jul 31/15
	7296	Jul 31/15
	7297	Jul 31/15
	7298	Jun 30/14
	7299	Jun 30/14
	7300	Jun 30/14
	7301	Jun 30/14
	7302	Jun 30/14
	7303	Jun 30/14
	7304	Jun 30/14
	7305	Jun 30/14
	7306	Jun 30/14
	7307	Jun 30/14
	7308	Jun 30/14
	7309	Jun 30/14
	7310	Nov 30/16
	7311	Nov 30/16
	7312	Nov 30/16
	7313	Nov 30/16
	7314	Nov 30/16
	7315	Nov 30/16
	7316	Nov 30/16
	7317	Nov 30/16
	7318	Feb 29/16
	7319	Feb 29/16

SUBJECT.	PAGE	DATE	SUBJECT.	PAGE	DATE
	7320	Feb 29/16		7350	Nov 12/19
	7321	Feb 29/16		7351	Nov 12/19
	7322	Feb 29/16		7352	Nov 12/19
	7323	Feb 29/16		7353	Nov 12/19
	7324	Feb 29/16		7354	Nov 12/19
	7325	Feb 29/16		7355	Nov 12/19
	7326	Feb 29/16		7356	Nov 12/19
	7327	Feb 29/16		7357	Nov 12/19
	7328	Feb 29/16		7358	Nov 12/19
	7329	Feb 29/16		7359	Nov 12/19
	7330	Feb 29/16		7360	Nov 12/19
	7331	Feb 29/16		7361	Nov 12/19
	7332	Feb 29/16		7362	Nov 12/19
	7333	Jan 31/16		7363	Feb 29/16
	7334	Jan 31/16		7364	Feb 29/16
	7335	Jan 31/16		7365	Feb 29/16
	7336	Jan 31/16		7366	Feb 29/16
	7337	Jun 30/14		7367	Feb 29/16
	7338	Jun 30/14		7368	Feb 29/16
	7339	Jun 30/14		7369	Feb 29/16
	7340	Jun 30/14		7370	Feb 29/16
	7341	Jun 30/14		7371	Jun 30/14
	7342	Jun 30/14		7372	Jun 30/14
	7343	Jun 30/14		7373	Jul 31/15
	7344	Jun 30/14		7374	Jul 31/15
	7345	Jun 30/14		7375	Jul 31/15
	7346	Nov 12/19		7376	Jul 31/15
	7347	Nov 12/19		7377	Jul 31/15
	7348	Nov 12/19		7378	Jul 31/15
	7349	Nov 12/19		7379	Jul 31/15

SUBJECT.	PAGE	DATE	SUBJECT.	PAGE	DATE
	7380	Jun 30/14		7408	Jun 30/14
	7381	Jun 30/14		7409	Jun 30/14
	7382	Jun 30/14		7410	Jun 30/14
	7383	Jun 30/14		7411	Jun 30/14
	7384	Jun 30/14		7412	Nov 30/16
	7385	Jun 30/14		7413	Nov 30/16
	7386	Jun 30/14		7414	Nov 30/16
	7387	Jun 30/14		7415	Jan 31/16
	7388	Sep 30/17		7416	Jan 31/16
	7389	Sep 30/17		7417	Jan 31/16
	7390	Sep 30/17		7418	Jan 31/16
	7391	Sep 30/17		7419	Sep 30/17
	7392	Sep 30/17		7420	Sep 30/17
	7393	Sep 30/17		7421	Sep 30/17
	7394	Sep 30/17		7422	Sep 30/17
	7395	Sep 30/17		7423	Sep 30/17
	7396	Sep 30/17		7424	Sep 30/17
	7397	Sep 30/17		7425	Sep 30/17
	7398	Sep 30/17		7426	Sep 30/17
	7399	Sep 30/17		7427	Sep 30/17
	7400	Sep 30/17		7428	Apr 30/15
	7401	Sep 30/17		7429	Apr 30/15
	7402	Sep 30/17		7430	Apr 30/15
	7403	Sep 30/17		7431	Jun 30/14
	7404	Sep 30/17		7432	Jun 30/14
	7405	Sep 30/17		7433	Jun 30/14
	7406	Sep 30/17		7434	Jun 30/14
	7407	Jun 30/14		7435	Jun 30/14

SUBJECT.	PAGE	DATE	SUBJECT.	PAGE	DATE
	7436	Jun 30/14		7464	Jun 30/14
	7437	Nov 30/16		7465	Jun 30/14
	7438	Nov 30/16		7466	Jun 30/14
	7439	Nov 30/16		7467	Nov 30/16
	7440	Nov 30/16		7468	Nov 30/16
	7441	Nov 30/16		7469	Nov 30/16
	7442	Jan 31/16		7470	Nov 30/16
	7443	Jan 31/16		7471	Nov 30/16
	7444	Jan 31/16		7472	Nov 30/16
	7445	Sep 30/17		7473	Jun 30/14
	7446	Sep 30/17		7474	Jun 30/14
	7447	Sep 30/17		7475	Jun 30/14
	7448	Sep 30/17		7476	Jun 30/14
	7449	Sep 30/17		7477	Jun 30/14
	7450	Sep 30/17		7478	Jun 30/14
	7451	Sep 30/17		7479	Sep 30/17
	7452	Sep 30/17		7480	Sep 30/17
	7453	Sep 30/17		7481	Sep 30/17
	7454	Sep 30/17		7482	Sep 30/17
	7455	Sep 30/17		7483	Sep 30/17
	7456	Sep 30/17		7484	Sep 30/17
	7457	Sep 30/17		7485	Sep 30/17
	7458	Jun 30/15		7486	Feb 29/16
	7459	Jun 30/15		7487	Feb 29/16
	7460	Jun 30/15		7488	Feb 29/16
	7461	Sep 30/17		7489	Feb 29/16
	7462	Sep 30/17		7490	Feb 29/16
	7463	Sep 30/17		7491	Jul 31/15
				7492	Jul 31/15

SUBJECT.	PAGE	DATE
	7493	Jul 31/15
	7494	Nov 30/16
	7495	Nov 30/16
	7496	Nov 30/16
	7497	Nov 30/16
	7498	Nov 30/16
	7499	Nov 30/16
	7500	Nov 30/16
	7501	Nov 30/16
	7502	Nov 30/16
	7503	Sep 30/17
	7504	Sep 30/17
	7505	Sep 30/17
	7506	Sep 30/17
	7507	Sep 30/17
	7508	Sep 30/17
	7509	Sep 30/17
	7510	Sep 30/17
	7511	Sep 30/17
	7512	Sep 30/17
	7513	Sep 30/17
	7514	Sep 30/17
	7515	Sep 30/17
	7516	Sep 30/17
	7517	Sep 30/17
	7518	Sep 30/17
	7519	Sep 30/17
	7520	Sep 30/17

SUBJECT.	PAGE	DATE
	7521	Sep 30/17
	7522	Sep 30/17
	7523	Jun 30/14
	7524	Jun 30/14
	7525	Jun 30/14
	7526	Sep 30/17
	7527	Sep 30/17
	7528	Sep 30/17
	7529	Sep 30/17
	7530	Sep 30/17
	7531	Sep 30/17
	7532	Sep 30/17
	7533	Sep 30/17
	7534	Sep 30/17
	7535	Sep 30/17
	7536	Sep 30/17
	7537	Sep 30/17
	7538	Sep 30/17
	7539	Sep 30/17
	7540	Sep 30/17
	7541	Sep 30/17
	7542	Sep 30/17
	7543	Sep 30/17
	7544	Feb 29/16
	7545	Feb 29/16
	7546	Feb 29/16
	7547	Feb 29/16
	7548	Feb 29/16

SUBJECT.	PAGE	DATE
	7549	Feb 29/16
	7550	Jun 30/14
	7551	Jun 30/14
	7552	Jun 30/14
	7553	Jun 30/14
	7554	Jun 30/14
	7555	Jun 30/14
	7556	Feb 29/16
	7557	Feb 29/16
	7558	Feb 29/16
	7559	Feb 29/16
	7560	Feb 29/16
	7561	Feb 29/16
	7562	Apr 30/15
	7563	Apr 30/15
	7564	Apr 30/15
	7565	Apr 30/15
	7566	Apr 30/15
	7567	Apr 30/15
	7568	Jun 30/14
	7569	Jun 30/14
	7570	Jun 30/14
	7571	Jun 30/14
	7572	Jun 30/14
	7573	Jun 30/14
	7574	Jun 30/14
	7575	Jun 30/14
	7576	Jun 30/14
	7577	Sep 30/17

SUBJECT.	PAGE	DATE
	7578	Sep 30/17
	7579	Sep 30/17
	7580	Sep 30/17
	7581	Sep 30/17
	7582	Sep 30/17
	7583	Sep 30/17
	7584	Sep 30/17
	7585	Sep 30/17
	7586	Sep 30/17
	7587	Sep 30/17
	7588	Feb 29/16
	7589	Feb 29/16
	7590	Feb 29/16
	7591	Feb 29/16
	7592	Jun 30/14
	7593	Jun 30/14
	7594	Jun 30/14
	7595	Sep 30/17
	7596	Sep 30/17
	7597	Sep 30/17
	7598	Nov 30/16
	7599	Nov 30/16
	7600	Nov 30/16
	7601	Nov 30/16
	7602	Nov 30/16
	7603	Nov 30/16
	7604	Nov 30/16
	7605	Feb 29/16

SUBJECT.	PAGE	DATE	SUBJECT.	PAGE	DATE
	7606	Feb 29/16		7634	Jul 31/15
	7607	Feb 29/16		7635	Jul 31/15
	7608	Feb 29/16		7636	Jul 31/15
	7609	Sep 30/17		7637	Sep 30/17
	7610	Sep 30/17		7638	Sep 30/17
	7611	Sep 30/17		7639	Sep 30/17
	7612	Sep 30/17		7640	Sep 30/17
	7613	Sep 30/17		7641	Sep 30/17
	7614	Sep 30/17		7642	Sep 30/17
	7615	Sep 30/17		7643	Sep 30/17
	7616	Nov 30/16		7644	Sep 30/17
	7617	Nov 30/16		7645	Sep 30/17
	7618	Nov 30/16		7646	Feb 29/16
	7619	Jun 30/14		7647	Feb 29/16
	7620	Jun 30/14		7648	Feb 29/16
	7621	Jun 30/14		7649	Feb 29/16
	7622	Nov 30/16		7650	Feb 29/16
	7623	Nov 30/16		7651	Feb 29/16
	7624	Nov 30/16		7652	Feb 29/16
	7625	Sep 30/17		7653	Feb 29/16
	7626	Sep 30/17		7654	Feb 29/16
	7627	Sep 30/17		7655	Jan 31/16
	7628	Sep 30/17		7656	Jan 31/16
	7629	Sep 30/17		7657	Jan 31/16
	7630	Sep 30/17		7658	Feb 29/16
	7631	Jul 31/15		7659	Feb 29/16
	7632	Jul 31/15		7660	Jun 30/14
	7633	Jul 31/15		7661	Jun 30/14
				7662	Jun 30/14

SUBJECT.	PAGE	DATE	SUBJECT.	PAGE	DATE
	7663	Jul 31/15		7692	Sep 30/17
	7664	Jul 31/15		7693	Jan 31/16
	7665	Jul 31/15		7694	Jan 31/16
	7666	Jul 31/15		7695	Jan 31/16
	7667	Nov 30/16		7696	Sep 30/17
	7668	Nov 30/16		7697	Sep 30/17
	7669	Nov 30/16		7698	Sep 30/17
	7670	Nov 30/16		7699	Sep 30/17
	7671	Jan 31/16		7700	Sep 30/17
	7672	Jan 31/16		7701	Sep 30/17
	7673	Jan 31/16		7702	Apr 30/15
	7674	Sep 30/17		7703	Apr 30/15
	7675	Sep 30/17		7704	Apr 30/15
	7676	Sep 30/17		7705	Apr 30/15
	7677	Sep 30/17		7706	Jun 30/14
	7678	Sep 30/17		7707	Jun 30/14
	7679	Sep 30/17		7708	Jun 30/14
	7680	Sep 30/17		7709	Jun 30/15
	7681	Nov 12/19		7710	Jun 30/15
	7682	Nov 12/19		7711	Nov 12/19
	7683	Nov 12/19		7712	Nov 12/19
	7684	Nov 12/19		7713	Nov 12/19
	7685	Nov 12/19		7714	Nov 12/19
	7686	Nov 12/19		7715	Nov 12/19
	7687	Nov 12/19		7716	Nov 12/19
	7688	Sep 30/17		7717	Nov 12/19
	7689	Sep 30/17		7718	Nov 12/19
	7690	Sep 30/17		7719	Nov 12/19
	7691	Sep 30/17		7720	Nov 12/19

SUBJECT.	PAGE	DATE	SUBJECT.	PAGE	DATE
	7721	Nov 12/19		7751	Nov 12/19
	7722	Nov 12/19		7752	Nov 12/19
	7723	Nov 12/19		7753	Nov 12/19
	7724	Nov 12/19		7754	Nov 12/19
	7725	Nov 12/19		7755	Nov 12/19
	7726	Nov 12/19		7756	Nov 12/19
	7727	Nov 12/19		7757	Nov 12/19
	7728	Nov 12/19		7758	Nov 12/19
	7729	Nov 12/19		7759	Nov 12/19
	7730	Nov 12/19		7760	Nov 12/19
	7731	Nov 12/19		7761	Nov 12/19
	7732	Nov 12/19		7762	Nov 12/19
	7733	Nov 12/19		7763	Nov 12/19
	7734	Nov 12/19		7764	Nov 12/19
	7735	Nov 12/19		7765	Nov 12/19
	7736	Nov 12/19		7766	Nov 12/19
	7737	Nov 12/19		7767	Nov 12/19
	7738	Nov 12/19		7768	Nov 12/19
	7739	Nov 12/19		7769	Nov 12/19
	7740	Nov 12/19		7770	Nov 12/19
	7741	Nov 12/19		7771	Nov 12/19
	7742	Nov 12/19		7772	Nov 12/19
	7743	Nov 12/19		7773	Nov 12/19
	7744	Nov 12/19		7774	Nov 12/19
	7745	Nov 12/19		7775	Nov 12/19
	7746	Nov 12/19		7776	Nov 12/19
	7747	Nov 12/19		7777	Nov 12/19
	7748	Nov 12/19		7778	Nov 12/19
	7749	Nov 12/19		7779	Nov 12/19
	7750	Nov 12/19		7780	Nov 12/19

SUBJECT.	PAGE	DATE	SUBJECT.	PAGE	DATE
	7781	Nov 12/19		7810	Sep 30/17
	7782	Nov 12/19		7811	Sep 30/17
	7783	Nov 12/19		7812	Sep 30/17
	7784	Nov 12/19		7813	Sep 30/17
	7785	Nov 12/19		7814	Sep 30/17
	7786	Nov 12/19		7815	Sep 30/17
	7787	Nov 12/19		7816	Sep 30/17
	7788	Nov 12/19		7817	Sep 30/17
	7789	Nov 12/19		7818	Sep 30/17
	7790	Nov 12/19		7819	Sep 30/17
	7791	Nov 12/19		7820	Sep 30/17
	7792	Nov 12/19		7821	Sep 30/17
	7793	Nov 12/19		7822	Sep 30/17
	7794	Nov 12/19		7823	Sep 30/17
	7795	Nov 12/19		7824	Sep 30/17
	7796	Nov 12/19		7825	Jun 30/14
	7797	Nov 12/19		7826	Jun 30/14
	7798	Sep 30/17		7827	Feb 29/16
	7799	Sep 30/17		7828	Feb 29/16
	7800	Sep 30/17		7829	Feb 29/16
	7801	Sep 30/17		7830	Jan 31/16
	7802	Sep 30/17		7831	Jan 31/16
	7803	Sep 30/17		7832	Jan 31/16
	7804	Sep 30/17		7833	Jan 31/16
	7805	Sep 30/17		7834	May 31/17
	7806	Sep 30/17		7835	May 31/17
	7807	Sep 30/17		7836	May 31/17
	7808	Sep 30/17		7837	May 31/17
	7809	Sep 30/17			

SUBJECT.	PAGE	DATE	SUBJECT.	PAGE	DATE
	7838	Nov 30/16		7867	Jun 30/14
	7839	Nov 30/16		7868	Jun 30/14
	7840	Nov 30/16		7869	Sep 30/17
	7841	Jan 31/16		7870	Sep 30/17
	7842	Jan 31/16		7871	Sep 30/17
	7843	Jan 31/16		7872	Jun 30/14
	7844	Jan 31/16		7873	Jun 30/14
	7845	Feb 29/16		7874	Jan 31/16
	7846	Feb 29/16		7875	Jan 31/16
	7847	Feb 29/16		7876	Jan 31/16
	7848	Feb 29/16		7877	Sep 30/17
	7849	Feb 29/16		7878	Sep 30/17
	7850	Feb 29/16		7879	Sep 30/17
	7851	Feb 29/16		7880	Sep 30/17
	7852	Sep 30/17		7881	Sep 30/17
	7853	Sep 30/17		7882	Sep 30/17
	7854	Sep 30/17		7883	Sep 30/17
	7855	Jun 30/14		7884	Sep 30/17
	7856	Jun 30/14		7885	Sep 30/17
	7857	Jun 30/14		7886	Jan 31/16
	7858	Feb 29/16		7887	Jan 31/16
	7859	Feb 29/16		7888	Jan 31/16
	7860	Feb 29/16		7889	Feb 29/16
	7861	Nov 30/16		7890	Feb 29/16
	7862	Nov 30/16		7891	Feb 29/16
	7863	Nov 30/16		7892	Sep 30/17
	7864	May 31/17		7893	Sep 30/17
	7865	May 31/17		7894	Sep 30/17
	7866	May 31/17			

SUBJECT.	PAGE	DATE	SUBJECT.	PAGE	DATE
	7895	Sep 30/17		7924	Jul 31/15
	7896	Nov 30/16		7925	Jul 31/15
	7897	Nov 30/16		7926	Jul 31/15
	7898	Nov 30/16		7927	Jul 31/15
	7899	Sep 30/17		7928	Jul 31/15
	7900	Sep 30/17		7929	Jul 31/15
	7901	Sep 30/17		7930	Jul 31/15
	7902	Sep 30/17		7931	Jul 31/15
	7903	Sep 30/17		7932	Jul 31/15
	7904	Sep 30/17		7933	Jul 31/15
	7905	Jan 31/16		7934	Feb 29/16
	7906	Jan 31/16		7935	Feb 29/16
	7907	Jan 31/16		7936	Feb 29/16
	7908	Jan 31/16		7937	Feb 29/16
	7909	Jan 31/16		7938	Feb 29/16
	7910	Jan 31/16		7939	Feb 29/16
	7911	Jan 31/16		7940	Feb 29/16
	7912	Jan 31/16		7941	Feb 29/16
	7913	Jan 31/16		7942	Feb 29/16
	7914	Jan 31/16		7943	Feb 29/16
	7915	Jan 31/16		7944	Feb 29/16
	7916	Jan 31/16		7945	Feb 29/16
	7917	Jan 31/16		7946	Feb 29/16
	7918	Jan 31/16		7947	Feb 29/16
	7919	Jan 31/16		7948	Nov 30/16
	7920	Jul 31/15		7949	Nov 30/16
	7921	Jul 31/15		7950	Nov 30/16
	7922	Jul 31/15		7951	Nov 30/16
	7923	Jul 31/15		7952	Nov 30/16
				7953	Nov 30/16

SUBJECT.	PAGE	DATE	SUBJECT.	PAGE	DATE
	7954	Nov 30/16		7984	Feb 29/16
	7955	Nov 30/16		7985	Feb 29/16
	7956	Nov 30/16		7986	Feb 29/16
	7957	Nov 30/16		7987	Feb 29/16
	7958	Nov 30/16		7988	Feb 29/16
	7959	Feb 29/16		7989	Feb 29/16
	7960	Feb 29/16		7990	Feb 29/16
	7961	Feb 29/16		7991	Feb 29/16
	7962	Feb 29/16		7992	Feb 29/16
	7963	Feb 29/16		7993	Feb 29/16
	7964	Feb 29/16		7994	Jul 31/15
	7965	Feb 29/16		7995	Jul 31/15
	7966	Feb 29/16		7996	Jul 31/15
	7967	Feb 29/16		7997	Jul 31/15
	7968	Feb 29/16		7998	Jul 31/15
	7969	Nov 30/16		7999	Jul 31/15
	7970	Nov 30/16		8000	Jul 31/15
	7971	Nov 30/16		8001	Jul 31/15
	7972	Nov 30/16		8002	Jul 31/15
	7973	Nov 30/16		8003	Jul 31/15
	7974	Nov 30/16		8004	Jul 31/15
	7975	Nov 30/16		8005	Jul 31/15
	7976	Nov 30/16		8006	Feb 29/16
	7977	Nov 30/16		8007	Feb 29/16
	7978	Nov 30/16		8008	Feb 29/16
	7979	Nov 30/16		8009	Feb 29/16
	7980	Nov 30/16		8010	Feb 29/16
	7981	Nov 30/16		8011	Feb 29/16
	7982	Feb 29/16		8012	Feb 29/16
	7983	Feb 29/16		8013	Feb 29/16

SUBJECT.	PAGE	DATE	SUBJECT.	PAGE	DATE
	8014	Feb 29/16		8044	Jan 31/16
	8015	Feb 29/16		8045	Jan 31/16
	8016	Feb 29/16		8046	Apr 30/15
	8017	Feb 29/16		8047	Apr 30/15
	8018	Feb 29/16		8048	Apr 30/15
	8019	Feb 29/16		8049	Apr 30/15
	8020	Feb 29/16		8050	Apr 30/15
	8021	Feb 29/16		8051	Apr 30/15
	8022	Nov 30/16		8052	Apr 30/15
	8023	Nov 30/16		8053	Apr 30/15
	8024	Nov 30/16		8054	Apr 30/15
	8025	Nov 30/16		8055	Apr 30/15
	8026	Nov 30/16		8056	Apr 30/15
	8027	Nov 30/16		8057	Apr 30/15
	8028	Nov 30/16		8058	Sep 30/17
	8029	Nov 30/16		8059	Sep 30/17
	8030	Nov 30/16		8060	Sep 30/17
	8031	Nov 30/16		8061	Sep 30/17
	8032	Nov 30/16		8062	Sep 30/17
	8033	Jan 31/16		8063	Sep 30/17
	8034	Jan 31/16		8064	Sep 30/17
	8035	Jan 31/16		8065	Sep 30/17
	8036	Jan 31/16		8066	Sep 30/17
	8037	Jan 31/16		8067	Sep 30/17
	8038	Jan 31/16		8068	Sep 30/17
	8039	Jan 31/16		8069	Sep 30/17
	8040	Jan 31/16		8070	Sep 30/17
	8041	Jan 31/16			
	8042	Jan 31/16			
	8043	Jan 31/16			

SUBJECT.	PAGE	DATE	SUBJECT.	PAGE	DATE
	8071	Sep 30/17		8098	Feb 29/16
	8072	Sep 30/17		8099	Feb 29/16
	8073	Sep 30/17		8100	Feb 29/16
	8074	Sep 30/17		8101	Feb 29/16
	8075	Sep 30/17		8102	Feb 29/16
	8076	Sep 30/17		8103	Feb 29/16
	8077	Sep 30/17		8104	Feb 29/16
	8078	Sep 30/17		8105	Feb 29/16
	8079	Sep 30/17		8106	Jun 30/14
	8080	Sep 30/17		8107	Jun 30/14
	8081	Sep 30/17		8108	Jun 30/14
	8082	Sep 30/17		8109	Jun 30/14
	8083	Sep 30/17		8110	Jun 30/14
	8084	Sep 30/17		8111	Jun 30/14
	8085	Sep 30/17		8112	Jun 30/14
	8086	Sep 30/17		8113	Jun 30/14
	8087	Sep 30/17		8114	Jun 30/14
	8088	Sep 30/17		8115	Jun 30/14
	8089	Sep 30/17		8116	Jul 31/15
	8090	Sep 30/17		8117	Jul 31/15
	8091	Sep 30/17		8118	Jul 31/15
	8092	Sep 30/17		8119	Jul 31/15
	8093	Sep 30/17		8120	Jul 31/15
	8094	Sep 30/17		8121	Jul 31/15
	8095	Feb 29/16		8122	Jul 31/15
	8096	Feb 29/16		8123	Jul 31/15
	8097	Feb 29/16		8124	Jul 31/15
				8125	Jul 31/15
				8126	Jul 31/15
				8127	Jul 31/15

SUBJECT.	PAGE	DATE	SUBJECT.	PAGE	DATE
	8128	Nov 30/16		8158	Jul 31/15
	8129	Nov 30/16		8159	Jul 31/15
	8130	Nov 30/16		8160	Jul 31/15
	8131	Nov 30/16		8161	Jul 31/15
	8132	Nov 30/16		8162	Jul 31/15
	8133	Nov 30/16		8163	Jul 31/15
	8134	Nov 30/16		8164	Sep 30/17
	8135	Nov 30/16		8165	Sep 30/17
	8136	Nov 30/16		8166	Sep 30/17
	8137	Nov 30/16		8167	Sep 30/17
	8138	Nov 30/16		8168	Sep 30/17
	8139	Nov 30/16		8169	Sep 30/17
	8140	Nov 30/16		8170	Sep 30/17
	8141	Nov 30/16		8171	Sep 30/17
	8142	Nov 30/16		8172	Sep 30/17
	8143	Nov 30/16		8173	Sep 30/17
	8144	Nov 30/16		8174	Sep 30/17
	8145	Nov 30/16		8175	Sep 30/17
	8146	Nov 30/16		8176	Sep 30/17
	8147	Nov 30/16		8177	Sep 30/17
	8148	Nov 30/16		8178	Sep 30/17
	8149	Nov 30/16		8179	Sep 30/17
	8150	Nov 30/16		8180	Sep 30/17
	8151	Nov 30/16		8181	Sep 30/17
	8152	Nov 30/16		8182	Sep 30/17
	8153	Jul 31/15		8183	Sep 30/17
	8154	Jul 31/15		8184	Sep 30/17
	8155	Jul 31/15		8185	Sep 30/17
	8156	Jul 31/15			
	8157	Jul 31/15			

SUBJECT.	PAGE	DATE
	8186	Sep 30/17
	8187	Sep 30/17
	8188	Sep 30/17
	8189	Nov 30/16
	8190	Nov 30/16
	8191	Nov 30/16
	8192	Nov 30/16
	8193	Jan 31/16
	8194	Jan 31/16
	8195	Jan 31/16
	8196	Jan 31/16
	8197	Jan 31/16
	8198	Sep 30/17
	8199	Sep 30/17
	8200	Sep 30/17
	8201	Sep 30/17
	8202	Sep 30/17
	8203	Sep 30/17
	8204	Sep 30/17
	8205	Sep 30/17
	8206	Sep 30/17
	8207	Feb 29/16
	8208	Feb 29/16
	8209	Feb 29/16
	8210	Jun 30/14
	8211	Jun 30/14
	8212	Feb 29/16
	8213	Feb 29/16

SUBJECT.	PAGE	DATE
	8214	Feb 29/16
	8215	Sep 30/17
	8216	Sep 30/17
	8217	Sep 30/17
	8218	Sep 30/17
	8219	Sep 30/17
	8220	Sep 30/17
	8221	Sep 30/17
	8222	Sep 30/17
	8223	Feb 29/16
	8224	Feb 29/16
	8225	Feb 29/16
	8226	Jun 30/14
	8227	Jun 30/14
	8228	Sep 30/17
	8229	Sep 30/17
	8230	Sep 30/17
	8231	Sep 30/17
	8232	Sep 30/17
	8233	Sep 30/17
	8234	Sep 30/17
	8235	Sep 30/17
	8236	Sep 30/17
	8237	Sep 30/17
	8238	Sep 30/17
	8239	Feb 29/16
	8240	Feb 29/16
	8241	Feb 29/16

SUBJECT.	PAGE	DATE	SUBJECT.	PAGE	DATE
	8242	Nov 30/16		8270	Jan 31/16
	8243	Nov 30/16		8271	Jan 31/16
	8244	Nov 30/16		8272	Sep 30/17
	8245	Nov 30/16		8273	Sep 30/17
	8246	Nov 30/16		8274	Sep 30/17
	8247	Nov 30/16		8275	Sep 30/17
	8248	Sep 30/17		8276	Sep 30/17
	8249	Sep 30/17		8277	Sep 30/17
	8250	Sep 30/17		8278	Sep 30/17
	8251	Sep 30/17		8279	Sep 30/17
	8252	Sep 30/17		8280	Sep 30/17
	8253	Sep 30/17		8281	Sep 30/17
	8254	Sep 30/17		8282	Sep 30/17
	8255	Sep 30/17		8283	Sep 30/17
	8256	Sep 30/17		8284	Sep 30/17
	8257	Sep 30/17		8285	Sep 30/17
	8258	Sep 30/17		8286	Sep 30/17
	8259	Sep 30/17		8287	Sep 30/17
	8260	Sep 30/17		8288	Sep 30/17
	8261	Sep 30/17		8289	Sep 30/17
	8262	Sep 30/17		8290	Sep 30/17
	8263	Sep 30/17		8291	Sep 30/17
	8264	Sep 30/17		8292	Jun 30/14
	8265	Sep 30/17		8293	Jun 30/14
	8266	Sep 30/17		8294	Jul 31/16
	8267	Sep 30/17		8295	Jul 31/16
	8268	Sep 30/17		8296	Jul 31/16
	8269	Sep 30/17		8297	Jul 31/16

SUBJECT.	PAGE	DATE
	8298	Jan 31/16
	8299	Jan 31/16
	8300	Jan 31/16
	8301	Jan 31/16
	8302	Jan 31/16
	8303	Jan 31/16
	8304	Jan 31/16
	8305	Jan 31/16
	8306	Sep 30/17
	8307	Sep 30/17
	8308	Sep 30/17
	8309	Sep 30/17
	8310	Sep 30/17
	8311	Sep 30/17
	8312	Sep 30/17
	8313	Sep 30/17
	8314	Sep 30/17
	8315	Sep 30/17
	8316	Sep 30/17
	8317	Sep 30/17
	8318	Sep 30/17
	8319	Sep 30/17
	8320	Jan 31/16
	8321	Jan 31/16
	8322	Jan 31/16
	8323	Jan 31/16
	8324	Jan 31/16
	8325	Jan 31/16

SUBJECT.	PAGE	DATE
	8326	Jan 31/16
	8327	Jan 31/16
	8328	Sep 30/17
	8329	Sep 30/17
	8330	Sep 30/17
	8331	Sep 30/17
	8332	Sep 30/17
	8333	Sep 30/17
	8334	Jul 31/15
	8335	Jul 31/15
	8336	Jul 31/15
	8337	Jul 31/15
	8338	Jul 31/15
	8339	Jul 31/15
	8340	Jul 31/15
	8341	Jul 31/15
	8342	Jul 31/15
	8343	Jul 31/15
	8344	Jul 31/15
	8345	Jul 31/15
	8346	Jul 31/15
	8347	Jul 31/15
	8348	Jul 31/15
	8349	Jan 31/16
	8350	Jan 31/16
	8351	Jan 31/16
	8352	Jan 31/16
	8353	Jan 31/16
	8354	Jan 31/16

SUBJECT.	PAGE	DATE
	8355	Jan 31/16
	8356	Jan 31/16
	8357	Jan 31/16
	8358	Jan 31/16
	8359	Feb 29/16
	8360	Feb 29/16
	8361	Feb 29/16
	8362	Feb 29/16
	8363	Feb 29/16
	8364	Feb 29/16
	8365	Feb 29/16
	8366	Feb 29/16
	8367	Feb 29/16
	8368	Feb 29/16
	8369	Feb 29/16
	8370	Feb 29/16
	8371	Feb 29/16
	8372	Sep 30/17
	8373	Sep 30/17
	8374	Sep 30/17
	8375	Sep 30/17
	8376	Sep 30/17
	8377	Sep 30/17
	8378	Sep 30/17
	8379	Sep 30/17
	8380	Sep 30/17
	8381	Sep 30/17
	8382	Sep 30/17
	8383	Sep 30/17

SUBJECT.	PAGE	DATE
	8384	Sep 30/17
	8385	Sep 30/17
	8386	Jan 31/16
	8387	Jan 31/16
	8388	Jan 31/16
	8389	Jan 31/16
	8390	Jan 31/16
	8391	Jan 31/16
	8392	Jan 31/16
	8393	Jan 31/16
	8394	Jan 31/16
	8395	Jan 31/16
	8396	Jan 31/16
	8397	Jan 31/16
	8398	Jan 31/16
	8399	Jan 31/16
	8400	Jan 31/16
	8401	Jan 31/16
	8402	Feb 29/16
	8403	Feb 29/16
	8404	Feb 29/16
	8405	Feb 29/16
	8406	Feb 29/16
	8407	Feb 29/16
	8408	Feb 29/16
	8409	Feb 29/16
	8410	Feb 29/16
	8411	Feb 29/16
	8412	Feb 29/16

SUBJECT.	PAGE	DATE	SUBJECT.	PAGE	DATE
	8413	Feb 29/16		8443	Feb 29/16
	8414	Feb 29/16		8444	Feb 29/16
	8415	Feb 29/16		8445	Feb 29/16
	8416	Feb 29/16		8446	Feb 29/16
	8417	Feb 29/16		8447	Feb 29/16
	8418	Feb 29/16		8448	Feb 29/16
	8419	Feb 29/16		8449	Feb 29/16
	8420	Feb 29/16		8450	Nov 30/16
	8421	Feb 29/16		8451	Nov 30/16
	8422	Feb 29/16		8452	Nov 30/16
	8423	Feb 29/16		8453	Nov 30/16
	8424	Feb 29/16		8454	Nov 30/16
	8425	Feb 29/16		8455	Nov 30/16
	8426	Feb 29/16		8456	Nov 30/16
	8427	Feb 29/16		8457	Nov 30/16
	8428	Feb 29/16		8458	Nov 30/16
	8429	Feb 29/16		8459	Jan 31/16
	8430	Feb 29/16		8460	Jan 31/16
	8431	Feb 29/16		8461	Jan 31/16
	8432	Feb 29/16		8462	Jan 31/16
	8433	Feb 29/16		8463	Jan 31/16
	8434	Feb 29/16		8464	Jan 31/16
	8435	Feb 29/16		8465	Jan 31/16
	8436	Feb 29/16		8466	Jan 31/16
	8437	Feb 29/16		8467	Jan 31/16
	8438	Feb 29/16		8468	Jan 31/16
	8439	Feb 29/16		8469	Jan 31/16
	8440	Feb 29/16		8470	Jan 31/16
	8441	Feb 29/16		8471	Jan 31/16
	8442	Feb 29/16		8472	Jan 31/16

SUBJECT.	PAGE	DATE
	8473	Jan 31/16
	8474	Jan 31/16
	8475	Jan 31/16
	8476	Jan 31/16
	8477	Jan 31/16
	8478	Jan 31/16
	8479	Jan 31/16
	8480	Jan 31/16
	8481	Jan 31/16
	8482	Jan 31/16
	8483	Jan 31/16
	8484	Jan 31/16
	8485	Jan 31/16
	8486	Jan 31/16
	8487	Jan 31/16
	8488	Jan 31/16
	8489	Sep 30/17
	8490	Sep 30/17
	8491	Sep 30/17
	8492	Sep 30/17
	8493	Sep 30/17
	8494	Sep 30/17
	8495	Sep 30/17
	8496	Sep 30/17
	8497	Sep 30/17
	8498	Sep 30/17
	8499	Sep 30/17
	8500	Sep 30/17
STORAGE (INCLUDING TRANSPORTATION)	15001	Jun 30/14
	15002	Jun 30/14
	15003	Jun 30/14
	15004	Jun 30/14
ILLUSTRATED PARTS LIST	10001	Jun 30/14
	10002	Jun 30/14
IPL INTRO	10003	Jun 30/14
	10004	Jun 30/14
	10005	Jun 30/14
	10006	Jun 30/14
	10007	Jun 30/14
	10008	Jan 31/16
	10009	Jan 31/16
ALPHA/NUMERIC INDEX	10010 R	Nov 27/23
	10011 R	Nov 27/23
	10012 R	Nov 27/23
	10013 R	Nov 27/23
	10014 R	Nov 27/23
	10015 R	Nov 27/23
	10016 R	Nov 27/23
	10017 R	Nov 27/23
	10018 R	Nov 27/23
	10019 R	Nov 27/23
	10020 R	Nov 27/23
	10021 R	Nov 27/23
	10022 R	Nov 27/23
	10023 R	Nov 27/23

SUBJECT.	PAGE		DATE	SUBJECT.	PAGE		DATE
	10024	R	Nov 27/23		10054	R	Nov 27/23
	10025	R	Nov 27/23		10055	R	Nov 27/23
	10026	R	Nov 27/23		10056	R	Nov 27/23
	10027	R	Nov 27/23		10057	R	Nov 27/23
	10028	R	Nov 27/23		10058	R	Nov 27/23
	10029	R	Nov 27/23		10059	R	Nov 27/23
	10030	R	Nov 27/23		10060	R	Nov 27/23
	10031	R	Nov 27/23		10061	R	Nov 27/23
	10032	R	Nov 27/23		10062	R	Nov 27/23
	10033	R	Nov 27/23		10063	R	Nov 27/23
	10034	R	Nov 27/23		10064	R	Nov 27/23
	10035	R	Nov 27/23		10065	R	Nov 27/23
	10036	R	Nov 27/23		10066	R	Nov 27/23
	10037	R	Nov 27/23		10067	R	Nov 27/23
	10038	R	Nov 27/23		10068	R	Nov 27/23
	10039	R	Nov 27/23		10069	R	Nov 27/23
	10040	R	Nov 27/23		10070	R	Nov 27/23
	10041	R	Nov 27/23		10071	R	Nov 27/23
	10042	R	Nov 27/23		10072	R	Nov 27/23
	10043	R	Nov 27/23		10073	R	Nov 27/23
	10044	R	Nov 27/23		10074	R	Nov 27/23
	10045	R	Nov 27/23		10075	R	Nov 27/23
	10046	R	Nov 27/23		10076	R	Nov 27/23
	10047	R	Nov 27/23		10077	R	Nov 27/23
	10048	R	Nov 27/23		10078	R	Nov 27/23
	10049	R	Nov 27/23		10079	R	Nov 27/23
	10050	R	Nov 27/23		10080	R	Nov 27/23
	10051	R	Nov 27/23		10081	R	Nov 27/23
	10052	R	Nov 27/23		10082	R	Nov 27/23
	10053	R	Nov 27/23		10083	R	Nov 27/23

SUBJECT.	PAGE		DATE	SUBJECT.	PAGE		DATE
	10084	R	Nov 27/23		10114	R	Nov 27/23
	10085	R	Nov 27/23		10115	R	Nov 27/23
	10086	R	Nov 27/23		10116	R	Nov 27/23
	10087	R	Nov 27/23		10117	R	Nov 27/23
	10088	R	Nov 27/23		10118	R	Nov 27/23
	10089	R	Nov 27/23		10119	R	Nov 27/23
	10090	R	Nov 27/23		10120	R	Nov 27/23
	10091	R	Nov 27/23		10121	R	Nov 27/23
	10092	R	Nov 27/23		10122	R	Nov 27/23
	10093	R	Nov 27/23		10123	R	Nov 27/23
	10094	R	Nov 27/23		10124	R	Nov 27/23
	10095	R	Nov 27/23		10125	R	Nov 27/23
	10096	R	Nov 27/23		10126	R	Nov 27/23
	10097	R	Nov 27/23		10127	R	Nov 27/23
	10098	R	Nov 27/23		10128	R	Nov 27/23
	10099	R	Nov 27/23		10129	R	Nov 27/23
	10100	R	Nov 27/23		10130	R	Nov 27/23
	10101	R	Nov 27/23		10131	R	Nov 27/23
	10102	R	Nov 27/23		10132	R	Nov 27/23
	10103	R	Nov 27/23		10133	R	Nov 27/23
	10104	R	Nov 27/23		10134	R	Nov 27/23
	10105	R	Nov 27/23		10135	R	Nov 27/23
	10106	R	Nov 27/23		10136	R	Nov 27/23
	10107	R	Nov 27/23		10137	R	Nov 27/23
	10108	R	Nov 27/23		10138	R	Nov 27/23
	10109	R	Nov 27/23		10139	R	Nov 27/23
	10110	R	Nov 27/23		10140	R	Nov 27/23
	10111	R	Nov 27/23		10141	R	Nov 27/23
	10112	R	Nov 27/23		10142	R	Nov 27/23
	10113	R	Nov 27/23		10143	R	Nov 27/23

SUBJECT.	PAGE		DATE	SUBJECT.	PAGE		DATE
	10144	R	Nov 27/23		10174	R	Nov 27/23
	10145	R	Nov 27/23		10175	R	Nov 27/23
	10146	R	Nov 27/23		10176	R	Nov 27/23
	10147	R	Nov 27/23		10177	R	Nov 27/23
	10148	R	Nov 27/23		10178	R	Nov 27/23
	10149	R	Nov 27/23		10179	R	Nov 27/23
	10150	R	Nov 27/23		10180	R	Nov 27/23
	10151	R	Nov 27/23		10181	R	Nov 27/23
	10152	R	Nov 27/23		10182	R	Nov 27/23
	10153	R	Nov 27/23		10183	R	Nov 27/23
	10154	R	Nov 27/23		10184	R	Nov 27/23
	10155	R	Nov 27/23		10185	R	Nov 27/23
	10156	R	Nov 27/23		10186	R	Nov 27/23
	10157	R	Nov 27/23		10187	R	Nov 27/23
	10158	R	Nov 27/23		10188	R	Nov 27/23
	10159	R	Nov 27/23		10189	R	Nov 27/23
	10160	R	Nov 27/23		10190	R	Nov 27/23
	10161	R	Nov 27/23		10191	R	Nov 27/23
	10162	R	Nov 27/23		10192	R	Nov 27/23
	10163	R	Nov 27/23		10193	R	Nov 27/23
	10164	R	Nov 27/23		10194	R	Nov 27/23
	10165	R	Nov 27/23		10195	R	Nov 27/23
	10166	R	Nov 27/23		10196	R	Nov 27/23
	10167	R	Nov 27/23		10197	R	Nov 27/23
	10168	R	Nov 27/23		10198	R	Nov 27/23
	10169	R	Nov 27/23		10199	R	Nov 27/23
	10170	R	Nov 27/23		10200	R	Nov 27/23
	10171	R	Nov 27/23		10201	R	Nov 27/23
	10172	R	Nov 27/23		10202	R	Nov 27/23
	10173	R	Nov 27/23		10203	R	Nov 27/23

SUBJECT.	PAGE		DATE	SUBJECT.	PAGE		DATE
	10204	R	Nov 27/23		10234	R	Nov 27/23
	10205	R	Nov 27/23		10235	R	Nov 27/23
	10206	R	Nov 27/23		10236	R	Nov 27/23
	10207	R	Nov 27/23		10237	R	Nov 27/23
	10208	R	Nov 27/23		10238	R	Nov 27/23
	10209	R	Nov 27/23		10239	R	Nov 27/23
	10210	R	Nov 27/23		10240	R	Nov 27/23
	10211	R	Nov 27/23		10241	R	Nov 27/23
	10212	R	Nov 27/23		10242	R	Nov 27/23
	10213	R	Nov 27/23		10243	R	Nov 27/23
	10214	R	Nov 27/23		10244	R	Nov 27/23
	10215	R	Nov 27/23		10245	R	Nov 27/23
	10216	R	Nov 27/23		10246	R	Nov 27/23
	10217	R	Nov 27/23		10247	R	Nov 27/23
	10218	R	Nov 27/23		10248	R	Nov 27/23
	10219	R	Nov 27/23		10249	R	Nov 27/23
	10220	R	Nov 27/23		10250	R	Nov 27/23
	10221	R	Nov 27/23		10251	R	Nov 27/23
	10222	R	Nov 27/23		10252	R	Nov 27/23
	10223	R	Nov 27/23		10253	R	Nov 27/23
	10224	R	Nov 27/23		10254	R	Nov 27/23
	10225	R	Nov 27/23		10255	R	Nov 27/23
	10226	R	Nov 27/23		10256	R	Nov 27/23
	10227	R	Nov 27/23		10257	R	Nov 27/23
	10228	R	Nov 27/23		10258	R	Nov 27/23
	10229	R	Nov 27/23		10259	R	Nov 27/23
	10230	R	Nov 27/23		10260	R	Nov 27/23
	10231	R	Nov 27/23		10261	R	Nov 27/23
	10232	R	Nov 27/23		10262	R	Nov 27/23
	10233	R	Nov 27/23		10263	R	Nov 27/23

SUBJECT.	PAGE		DATE	SUBJECT.	PAGE		DATE
	10264	R	Nov 27/23		10294	R	Nov 27/23
	10265	R	Nov 27/23		10295	R	Nov 27/23
	10266	R	Nov 27/23		10296	R	Nov 27/23
	10267	R	Nov 27/23		10297	R	Nov 27/23
	10268	R	Nov 27/23		10298	R	Nov 27/23
	10269	R	Nov 27/23		10299	R	Nov 27/23
	10270	R	Nov 27/23		10300	R	Nov 27/23
	10271	R	Nov 27/23		10301	R	Nov 27/23
	10272	R	Nov 27/23		10302	R	Nov 27/23
	10273	R	Nov 27/23		10303	R	Nov 27/23
	10274	R	Nov 27/23		10304	R	Nov 27/23
	10275	R	Nov 27/23		10305	R	Nov 27/23
	10276	R	Nov 27/23		10306	R	Nov 27/23
	10277	R	Nov 27/23		10307	R	Nov 27/23
	10278	R	Nov 27/23		10308	R	Nov 27/23
	10279	R	Nov 27/23		10309	R	Nov 27/23
	10280	R	Nov 27/23		10310	R	Nov 27/23
	10281	R	Nov 27/23		10311	R	Nov 27/23
	10282	R	Nov 27/23		10312	R	Nov 27/23
	10283	R	Nov 27/23		10313	R	Nov 27/23
	10284	R	Nov 27/23		10314	R	Nov 27/23
	10285	R	Nov 27/23		10315	R	Nov 27/23
	10286	R	Nov 27/23		10316	R	Nov 27/23
	10287	R	Nov 27/23		10317	R	Nov 27/23
	10288	R	Nov 27/23		10318	R	Nov 27/23
	10289	R	Nov 27/23		10319	R	Nov 27/23
	10290	R	Nov 27/23		10320	R	Nov 27/23
	10291	R	Nov 27/23		10321	R	Nov 27/23
	10292	R	Nov 27/23		10322	R	Nov 27/23
	10293	R	Nov 27/23		10323	R	Nov 27/23

SUBJECT.	PAGE		DATE	SUBJECT.	PAGE		DATE
	10324	R	Nov 27/23		10354	R	Nov 27/23
	10325	R	Nov 27/23		10355	R	Nov 27/23
	10326	R	Nov 27/23		10356	R	Nov 27/23
	10327	R	Nov 27/23		10357	R	Nov 27/23
	10328	R	Nov 27/23		10358	R	Nov 27/23
	10329	R	Nov 27/23		10359	R	Nov 27/23
	10330	R	Nov 27/23		10360	R	Nov 27/23
	10331	R	Nov 27/23		10361	R	Nov 27/23
	10332	R	Nov 27/23		10362	R	Nov 27/23
	10333	R	Nov 27/23		10363	R	Nov 27/23
	10334	R	Nov 27/23		10364	R	Nov 27/23
	10335	R	Nov 27/23		10365	R	Nov 27/23
	10336	R	Nov 27/23		10366	R	Nov 27/23
	10337	R	Nov 27/23		10367	R	Nov 27/23
	10338	R	Nov 27/23		10368	R	Nov 27/23
	10339	R	Nov 27/23		10369	R	Nov 27/23
	10340	R	Nov 27/23		10370	R	Nov 27/23
	10341	R	Nov 27/23		10371	R	Nov 27/23
	10342	R	Nov 27/23		10372	R	Nov 27/23
	10343	R	Nov 27/23		10373	R	Nov 27/23
	10344	R	Nov 27/23		10374	R	Nov 27/23
	10345	R	Nov 27/23		10375	R	Nov 27/23
	10346	R	Nov 27/23		10376	R	Nov 27/23
	10347	R	Nov 27/23		10377	R	Nov 27/23
	10348	R	Nov 27/23		10378	R	Nov 27/23
	10349	R	Nov 27/23		10379	R	Nov 27/23
	10350	R	Nov 27/23		10380	R	Nov 27/23
	10351	R	Nov 27/23		10381	R	Nov 27/23
	10352	R	Nov 27/23		10382	R	Nov 27/23
	10353	R	Nov 27/23		10383	R	Nov 27/23

SUBJECT.	PAGE		DATE	SUBJECT.	PAGE		DATE
	10384	R	Nov 27/23		10414	R	Nov 27/23
	10385	R	Nov 27/23		10415	R	Nov 27/23
	10386	R	Nov 27/23		10416	R	Nov 27/23
	10387	R	Nov 27/23		10417	R	Nov 27/23
	10388	R	Nov 27/23		10418	R	Nov 27/23
	10389	R	Nov 27/23		10419	R	Nov 27/23
	10390	R	Nov 27/23		10420	R	Nov 27/23
	10391	R	Nov 27/23		10421	R	Nov 27/23
	10392	R	Nov 27/23		10422	R	Nov 27/23
	10393	R	Nov 27/23		10423	R	Nov 27/23
	10394	R	Nov 27/23		10424	R	Nov 27/23
	10395	R	Nov 27/23		10425	R	Nov 27/23
	10396	R	Nov 27/23		10426	R	Nov 27/23
	10397	R	Nov 27/23		10427	R	Nov 27/23
	10398	R	Nov 27/23		10428	R	Nov 27/23
	10399	R	Nov 27/23		10429	R	Nov 27/23
	10400	R	Nov 27/23		10430	R	Nov 27/23
	10401	R	Nov 27/23		10431	R	Nov 27/23
	10402	R	Nov 27/23		10432	R	Nov 27/23
	10403	R	Nov 27/23		10433	R	Nov 27/23
	10404	R	Nov 27/23		10434	R	Nov 27/23
	10405	R	Nov 27/23		10435	R	Nov 27/23
	10406	R	Nov 27/23		10436	R	Nov 27/23
	10407	R	Nov 27/23		10437	R	Nov 27/23
	10408	R	Nov 27/23		10438	R	Nov 27/23
	10409	R	Nov 27/23		10439	R	Nov 27/23
	10410	R	Nov 27/23		10440	R	Nov 27/23
	10411	R	Nov 27/23		10441	R	Nov 27/23
	10412	R	Nov 27/23		10442	R	Nov 27/23
	10413	R	Nov 27/23		10443	R	Nov 27/23

SUBJECT.	PAGE		DATE	SUBJECT.	PAGE		DATE
	10444	R	Nov 27/23		10474	R	Nov 27/23
	10445	R	Nov 27/23		10475	R	Nov 27/23
	10446	R	Nov 27/23		10476	R	Nov 27/23
	10447	R	Nov 27/23		10477	R	Nov 27/23
	10448	R	Nov 27/23		10478	R	Nov 27/23
	10449	R	Nov 27/23		10479	R	Nov 27/23
	10450	R	Nov 27/23		10480	R	Nov 27/23
	10451	R	Nov 27/23		10481	R	Nov 27/23
	10452	R	Nov 27/23		10482	R	Nov 27/23
	10453	R	Nov 27/23		10483	R	Nov 27/23
	10454	R	Nov 27/23		10484	R	Nov 27/23
	10455	R	Nov 27/23		10485	R	Nov 27/23
	10456	R	Nov 27/23		10486	R	Nov 27/23
	10457	R	Nov 27/23		10487	R	Nov 27/23
	10458	R	Nov 27/23		10488	R	Nov 27/23
	10459	R	Nov 27/23		10489	R	Nov 27/23
	10460	R	Nov 27/23		10490	R	Nov 27/23
	10461	R	Nov 27/23		10491	R	Nov 27/23
	10462	R	Nov 27/23		10492	R	Nov 27/23
	10463	R	Nov 27/23		10493	R	Nov 27/23
	10464	R	Nov 27/23		10494	R	Nov 27/23
	10465	R	Nov 27/23		10495	R	Nov 27/23
	10466	R	Nov 27/23		10496	R	Nov 27/23
	10467	R	Nov 27/23		10497	R	Nov 27/23
	10468	R	Nov 27/23		10498	R	Nov 27/23
	10469	R	Nov 27/23		10499	R	Nov 27/23
	10470	R	Nov 27/23		10500	R	Nov 27/23
	10471	R	Nov 27/23		10501	R	Nov 27/23
	10472	R	Nov 27/23		10502	R	Nov 27/23
	10473	R	Nov 27/23		10503	R	Nov 27/23

SUBJECT.	PAGE		DATE	SUBJECT.	PAGE		DATE
	10504	R	Nov 27/23		10534	R	Nov 27/23
	10505	R	Nov 27/23		10535	R	Nov 27/23
	10506	R	Nov 27/23		10536	R	Nov 27/23
	10507	R	Nov 27/23		10537	R	Nov 27/23
	10508	R	Nov 27/23		10538	R	Nov 27/23
	10509	R	Nov 27/23		10539	R	Nov 27/23
	10510	R	Nov 27/23		10540	R	Nov 27/23
	10511	R	Nov 27/23		10541	R	Nov 27/23
	10512	R	Nov 27/23		10542	R	Nov 27/23
	10513	R	Nov 27/23		10543	R	Nov 27/23
	10514	R	Nov 27/23		10544	R	Nov 27/23
	10515	R	Nov 27/23		10545	R	Nov 27/23
	10516	R	Nov 27/23		10546	R	Nov 27/23
	10517	R	Nov 27/23		10547	R	Nov 27/23
	10518	R	Nov 27/23		10548	R	Nov 27/23
	10519	R	Nov 27/23		10549	R	Nov 27/23
	10520	R	Nov 27/23		10550	R	Nov 27/23
	10521	R	Nov 27/23		10551	R	Nov 27/23
	10522	R	Nov 27/23		10552	R	Nov 27/23
	10523	R	Nov 27/23		10553	R	Nov 27/23
	10524	R	Nov 27/23		10554	R	Nov 27/23
	10525	R	Nov 27/23		10555	R	Nov 27/23
	10526	R	Nov 27/23		10556	R	Nov 27/23
	10527	R	Nov 27/23		10557	R	Nov 27/23
	10528	R	Nov 27/23		10558	R	Nov 27/23
	10529	R	Nov 27/23		10559	R	Nov 27/23
	10530	R	Nov 27/23		10560	R	Nov 27/23
	10531	R	Nov 27/23		10561	R	Nov 27/23
	10532	R	Nov 27/23		10562	R	Nov 27/23
	10533	R	Nov 27/23		10563	R	Nov 27/23

SUBJECT.	PAGE		DATE	SUBJECT.	PAGE		DATE
	10564	R	Nov 27/23		10594	R	Nov 27/23
	10565	R	Nov 27/23		10595	R	Nov 27/23
	10566	R	Nov 27/23		10596	R	Nov 27/23
	10567	R	Nov 27/23		10597	R	Nov 27/23
	10568	R	Nov 27/23		10598	R	Nov 27/23
	10569	R	Nov 27/23		10599	R	Nov 27/23
	10570	R	Nov 27/23		10600	R	Nov 27/23
	10571	R	Nov 27/23		10601	R	Nov 27/23
	10572	R	Nov 27/23		10602	R	Nov 27/23
	10573	R	Nov 27/23		10603	R	Nov 27/23
	10574	R	Nov 27/23		10604	R	Nov 27/23
	10575	R	Nov 27/23		10605	R	Nov 27/23
	10576	R	Nov 27/23		10606	R	Nov 27/23
	10577	R	Nov 27/23		10607	R	Nov 27/23
	10578	R	Nov 27/23		10608	R	Nov 27/23
	10579	R	Nov 27/23		10609	R	Nov 27/23
	10580	R	Nov 27/23		10610	R	Nov 27/23
	10581	R	Nov 27/23		10611	R	Nov 27/23
	10582	R	Nov 27/23		10612	R	Nov 27/23
	10583	R	Nov 27/23		10613	R	Nov 27/23
	10584	R	Nov 27/23		10614	R	Nov 27/23
	10585	R	Nov 27/23		10615	R	Nov 27/23
	10586	R	Nov 27/23		10616	R	Nov 27/23
	10587	R	Nov 27/23		10617	R	Nov 27/23
	10588	R	Nov 27/23		10618	R	Nov 27/23
	10589	R	Nov 27/23		10619	R	Nov 27/23
	10590	R	Nov 27/23		10620	R	Nov 27/23
	10591	R	Nov 27/23		10621	R	Nov 27/23
	10592	R	Nov 27/23		10622	R	Nov 27/23
	10593	R	Nov 27/23		10623	R	Nov 27/23

SUBJECT.	PAGE		DATE	SUBJECT.	PAGE		DATE
	10624	R	Nov 27/23		10654	R	Nov 27/23
	10625	R	Nov 27/23		10655	R	Nov 27/23
	10626	R	Nov 27/23		10656	R	Nov 27/23
	10627	R	Nov 27/23	DPL	10657	R	Nov 27/23
	10628	R	Nov 27/23		10658	R	Nov 27/23
	10629	R	Nov 27/23		10659		Jun 30/14
	10630	R	Nov 27/23		10660		Jul 31/15
	10631	R	Nov 27/23		10661		Jul 31/15
	10632	R	Nov 27/23		10662		Jul 31/15
	10633	R	Nov 27/23		10663		Jul 31/15
	10634	R	Nov 27/23		10664		Jul 31/15
	10635	R	Nov 27/23		10665		Jul 31/15
	10636	R	Nov 27/23		10666		Jul 31/15
	10637	R	Nov 27/23		10667		Jul 31/15
	10638	R	Nov 27/23		10668		Jul 31/15
	10639	R	Nov 27/23		10669		Jul 31/15
	10640	R	Nov 27/23		10670		Jul 31/15
	10641	R	Nov 27/23		10671		Jul 31/15
	10642	R	Nov 27/23		10672		Jul 31/15
	10643	R	Nov 27/23		10673		Jun 30/14
	10644	R	Nov 27/23		10674		Jan 31/16
	10645	R	Nov 27/23		10675		Jan 31/16
	10646	R	Nov 27/23		10676		Jan 31/16
	10647	R	Nov 27/23		10677		Jan 31/16
	10648	R	Nov 27/23		10678		Jan 31/16
	10649	R	Nov 27/23		10679		Jan 31/16
	10650	R	Nov 27/23		10680		Jan 31/16
	10651	R	Nov 27/23		10681		Jan 31/16
	10652	R	Nov 27/23		10682		Jan 31/16
	10653	R	Nov 27/23		10683		Jan 31/16

SUBJECT.	PAGE	DATE	SUBJECT.	PAGE	DATE
	10684	Jan 31/16		10714	Jan 31/16
	10685	Jan 31/16		10715	Jan 31/16
	10686	Jan 31/16		10716	Jan 31/16
	10687	Jan 31/16		10717	Jan 31/16
	10688	Jan 31/16		10718	Jan 31/16
	10689	Jan 31/16		10719	Jan 31/16
	10690	Jan 31/16		10720	Jan 31/16
	10691	Jun 30/14		10721	Jan 31/16
	10692	Jul 31/15		10722	Jan 31/16
	10693	Jul 31/15		10723	Jun 30/14
	10694	Jul 31/15		10724	Jul 31/15
	10695	Jul 31/15		10725	Jul 31/15
	10696	Jul 31/15		10726	Jul 31/15
	10697	Jul 31/15		10727	Jul 31/15
	10698	Jul 31/15		10728	Jul 31/15
	10699	Jul 31/15		10729	Jul 31/15
	10700	Jul 31/15		10730	Jul 31/15
	10701	Jul 31/15		10731	Jul 31/15
	10702	Jul 31/15		10732	Jul 31/15
	10703	Jul 31/15		10733	Jul 31/15
	10704	Jul 31/15		10734	Jul 31/15
	10705	Jul 31/15		10735	Jul 31/15
	10706	Jul 31/15		10736	Jul 31/15
	10707	Jun 30/14		10737	Jun 30/14
	10708	Jan 31/16		10738	Feb 29/16
	10709	Jan 31/16		10739	Feb 29/16
	10710	Jan 31/16		10740	Feb 29/16
	10711	Jan 31/16		10741	Feb 29/16
	10712	Jan 31/16		10742	Feb 29/16
	10713	Jan 31/16		10743	Feb 29/16

SUBJECT.	PAGE	DATE	SUBJECT.	PAGE	DATE
	10744	Feb 29/16		10774	Jan 31/16
	10745	Feb 29/16		10775	Jan 31/16
	10746	Feb 29/16		10776	Jan 31/16
	10747	Feb 29/16		10777	Jan 31/16
	10748	Feb 29/16		10778	Jan 31/16
	10749	Feb 29/16		10779	Jan 31/16
	10750	Feb 29/16		10780	Jan 31/16
	10751	Feb 29/16		10781	Jan 31/16
	10752	Feb 29/16		10782	Jan 31/16
	10753	Jun 30/14		10783	Jan 31/16
	10754	Nov 30/16		10784	Jan 31/16
	10755	Nov 30/16		10785	Jan 31/16
	10756	Nov 30/16		10786	Jan 31/16
	10757	Nov 30/16		10787	Jun 30/14
	10758	Nov 30/16		10788	Jan 31/16
	10759	Nov 30/16		10789	Jan 31/16
	10760	Nov 30/16		10790	Jan 31/16
	10761	Nov 30/16		10791	Jan 31/16
	10762	Nov 30/16		10792	Jan 31/16
	10763	Nov 30/16		10793	Jan 31/16
	10764	Nov 30/16		10794	Jan 31/16
	10765	Nov 30/16		10795	Jan 31/16
	10766	Nov 30/16		10796	Jan 31/16
	10767	Nov 30/16		10797	Jan 31/16
	10768	Nov 30/16		10798	Jan 31/16
	10769	Jun 30/14		10799	Jan 31/16
	10770	Jan 31/16		10800	Jan 31/16
	10771	Jan 31/16		10801	Jan 31/16
	10772	Jan 31/16		10802	Jan 31/16
	10773	Jan 31/16		10803	Jan 31/16

SUBJECT.	PAGE	DATE	SUBJECT.	PAGE	DATE
	10804	Jan 31/16		10834	Jan 31/16
	10805	Jun 30/14		10835	Jan 31/16
	10806	Nov 30/16		10836	Jan 31/16
	10807	Nov 30/16		10837	Jan 31/16
	10808	Nov 30/16		10838	Jan 31/16
	10809	Nov 30/16		10839	Jan 31/16
	10810	Nov 30/16		10840	Jan 31/16
	10811	Nov 30/16		10841	Jun 30/14
	10812	Nov 30/16		10842	Jan 31/16
	10813	Nov 30/16		10843	Jan 31/16
	10814	Nov 30/16		10844	Jan 31/16
	10815	Nov 30/16		10845	Jan 31/16
	10816	Nov 30/16		10846	Jan 31/16
	10817	Nov 30/16		10847	Jan 31/16
	10818	Nov 30/16		10848	Jan 31/16
	10819	Nov 30/16		10849	Jan 31/16
	10820	Nov 30/16		10850	Jan 31/16
	10821	Nov 30/16		10851	Jan 31/16
	10822	Nov 30/16		10852	Jan 31/16
	10823	Jun 30/14		10853	Jan 31/16
	10824	Jan 31/16		10854	Jan 31/16
	10825	Jan 31/16		10855	Jan 31/16
	10826	Jan 31/16		10856	Jan 31/16
	10827	Jan 31/16		10857	Jan 31/16
	10828	Jan 31/16		10858	Jan 31/16
	10829	Jan 31/16		10859	Jun 30/14
	10830	Jan 31/16		10860	Feb 29/16
	10831	Jan 31/16		10861	Feb 29/16
	10832	Jan 31/16		10862	Feb 29/16
	10833	Jan 31/16		10863	Feb 29/16

SUBJECT.	PAGE	DATE	SUBJECT.	PAGE	DATE
	10864	Feb 29/16		10894	Jun 30/14
	10865	Feb 29/16		10895	Jun 30/14
	10866	Feb 29/16		10896	Jun 30/14
	10867	Feb 29/16		10897	Jun 30/14
	10868	Feb 29/16		10898	Jun 30/14
	10869	Feb 29/16		10899	Jun 30/14
	10870	Feb 29/16		10900	Jun 30/14
	10871	Feb 29/16		10901	Jun 30/14
	10872	Feb 29/16		10902	Jun 30/14
	10873	Feb 29/16		10903	Jun 30/14
	10874	Feb 29/16		10904	Jun 30/14
	10875	Jun 30/14		10905	Jun 30/14
	10876	Nov 30/16		10906	Jun 30/14
	10877	Nov 30/16		10907	Jun 30/14
	10878	Nov 30/16		10908	Jan 31/16
	10879	Nov 30/16		10909	Jan 31/16
	10880	Nov 30/16		10910	Jan 31/16
	10881	Nov 30/16		10911	Jan 31/16
	10882	Nov 30/16		10912	Jan 31/16
	10883	Nov 30/16		10913	Jan 31/16
	10884	Nov 30/16		10914	Jan 31/16
	10885	Nov 30/16		10915	Jan 31/16
	10886	Nov 30/16		10916	Jan 31/16
	10887	Nov 30/16		10917	Jan 31/16
	10888	Nov 30/16		10918	Jan 31/16
	10889	Nov 30/16		10919	Jan 31/16
	10890	Nov 30/16		10920	Jan 31/16
	10891	Jun 30/14		10921	Jan 31/16
	10892	Jun 30/14		10922	Jan 31/16
	10893	Jun 30/14		10923	Jan 31/16

SUBJECT.	PAGE	DATE	SUBJECT.	PAGE	DATE
	10924	Jan 31/16		10954	Nov 30/16
	10925	Jun 30/14		10955	Nov 30/16
	10926	Jun 30/14		10956	Nov 30/16
	10927	Jun 30/14		10957	Nov 30/16
	10928	Jun 30/14		10958	Nov 30/16
	10929	Jun 30/14		10959	Nov 30/16
	10930	Jun 30/14		10960	Nov 30/16
	10931	Jun 30/14		10961	Jun 30/14
	10932	Nov 30/16		10962	Jun 30/15
	10933	Nov 30/16		10963	Jun 30/15
	10934	Nov 30/16		10964	Jun 30/15
	10935	Nov 30/16		10965	Jun 30/15
	10936	Nov 30/16		10966	Jun 30/15
	10937	Nov 30/16		10967	Jun 30/15
	10938	Nov 30/16		10968	Jun 30/15
	10939	Nov 30/16		10969	Jun 30/15
	10940	Nov 30/16		10970	Jun 30/15
	10941	Nov 30/16		10971	Jun 30/15
	10942	Nov 30/16		10972	Jun 30/15
	10943	Nov 30/16		10973	Jun 30/15
	10944	Nov 30/16		10974	Jun 30/15
	10945	Jun 30/14		10975	Jun 30/15
	10946	Nov 30/16		10976	Jun 30/15
	10947	Nov 30/16		10977	Jun 30/14
	10948	Nov 30/16		10978	Nov 30/16
	10949	Nov 30/16		10979	Nov 30/16
	10950	Nov 30/16		10980	Nov 30/16
	10951	Nov 30/16		10981	Nov 30/16
	10952	Nov 30/16		10982	Nov 30/16
	10953	Nov 30/16		10983	Nov 30/16

SUBJECT.	PAGE	DATE	SUBJECT.	PAGE	DATE
	10984	Nov 30/16		11014	Jun 30/15
	10985	Nov 30/16		11015	Jun 30/15
	10986	Nov 30/16		11016	Jun 30/15
	10987	Nov 30/16		11017	Jun 30/15
	10988	Nov 30/16		11018	Jun 30/15
	10989	Nov 30/16		11019	Jun 30/15
	10990	Nov 30/16		11020	Jun 30/15
	10991	Nov 30/16		11021	Jun 30/15
	10992	Nov 30/16		11022	Jun 30/15
	10993	Jun 30/14		11023	Jun 30/15
	10994	Jul 31/15		11024	Jun 30/15
	10995	Jul 31/15		11025	Jun 30/15
	10996	Jul 31/15		11026	Jun 30/15
	10997	Jul 31/15		11027	Jun 30/15
	10998	Jul 31/15		11028	Jun 30/15
	10999	Jul 31/15		11029	Jun 30/14
	11000	Jul 31/15		11030	Jun 30/15
	11001	Jul 31/15		11031	Jun 30/15
	11002	Jul 31/15		11032	Jun 30/15
	11003	Jul 31/15		11033	Jun 30/15
	11004	Jul 31/15		11034	Jun 30/15
	11005	Jul 31/15		11035	Jun 30/15
	11006	Jul 31/15		11036	Jun 30/15
	11007	Jul 31/15		11037	Jun 30/15
	11008	Jul 31/15		11038	Jun 30/15
	11009	Jul 31/15		11039	Jun 30/15
	11010	Jul 31/15		11040	Jun 30/15
	11011	Jun 30/14		11041	Jun 30/15
	11012	Jun 30/15		11042	Jun 30/15
	11013	Jun 30/15		11043	Jun 30/15

SUBJECT.	PAGE	DATE
	11044	Jun 30/15
	11045	Jun 30/15
	11046	Jun 30/15
	11047	Jun 30/14
	11048	Feb 29/16
	11049	Feb 29/16
	11050	Feb 29/16
	11051	Feb 29/16
	11052	Feb 29/16
	11053	Feb 29/16
	11054	Feb 29/16
	11055	Feb 29/16
	11056	Feb 29/16
	11057	Feb 29/16
	11058	Feb 29/16
	11059	Feb 29/16
	11060	Feb 29/16
	11061	Jun 30/14
	11062	Jun 30/14
	11063	Jun 30/14
	11064	Jun 30/14
	11065	Jun 30/14
	11066	Jun 30/14
	11067	Jun 30/14
	11068	Jun 30/14
	11069	Jun 30/14
	11070	Jun 30/14
	11071	Jun 30/14
	11072	Jun 30/14
	11073	Jun 30/14

SUBJECT.	PAGE	DATE
	11074	Sep 30/17
	11075	Sep 30/17
	11076	Sep 30/17
	11077	Sep 30/17
	11078	Sep 30/17
	11079	Sep 30/17
	11080	Sep 30/17
	11081	Sep 30/17
	11082	Sep 30/17
	11083	Sep 30/17
	11084	Sep 30/17
	11085	Sep 30/17
	11086	Sep 30/17
	11087	Jun 30/14
	11088	Sep 30/17
	11089	Sep 30/17
	11090	Sep 30/17
	11091	Sep 30/17
	11092	Sep 30/17
	11093	Sep 30/17
	11094	Sep 30/17
	11095	Sep 30/17
	11096	Sep 30/17
	11097	Jun 30/14
	11098	Sep 30/17
	11099	Sep 30/17
	11100	Sep 30/17

SUBJECT.	PAGE	DATE	SUBJECT.	PAGE	DATE
	11101	Sep 30/17		11128	Sep 30/17
	11102	Sep 30/17		11129	Sep 30/17
	11103	Sep 30/17		11130	Sep 30/17
	11104	Sep 30/17		11131	Sep 30/17
	11105	Sep 30/17		11132	Sep 30/17
	11106	Sep 30/17		11133	Sep 30/17
	11107	Sep 30/17		11134	Sep 30/17
	11108	Sep 30/17		11135	Sep 30/17
	11109	Sep 30/17		11136	Sep 30/17
	11110	Sep 30/17		11137	Sep 30/17
	11111	Jun 30/14		11138	Sep 30/17
	11112	Sep 30/17		11139	Sep 30/17
	11113	Sep 30/17		11140	Sep 30/17
	11114	Sep 30/17		11141	Jun 30/14
	11115	Sep 30/17		11142	Jun 30/14
	11116	Sep 30/17		11143	Jun 30/14
	11117	Sep 30/17		11144	Jun 30/14
	11118	Sep 30/17		11145	Jun 30/14
	11119	Sep 30/17		11146	Jun 30/14
	11120	Sep 30/17		11147	Jun 30/14
	11121	Sep 30/17		11148	Jun 30/14
	11122	Sep 30/17		11149	Jun 30/14
	11123	Sep 30/17		11150	Jun 30/14
	11124	Sep 30/17		11151	Jun 30/14
	11125	Sep 30/17		11152	Jun 30/14
	11126	Sep 30/17		11153	Jun 30/14
	11127	Jun 30/14		11154	Jun 30/14
				11155	Jun 30/14

SUBJECT.	PAGE	DATE	SUBJECT.	PAGE	DATE
	11156	Jun 30/14		11184	Sep 30/17
	11157	Jun 30/14		11185	Sep 30/17
	11158	Jun 30/14		11186	Sep 30/17
	11159	Jun 30/14		11187	Jun 30/14
	11160	Jun 30/14		11188	Jun 30/14
	11161	Jun 30/14		11189	Jun 30/14
	11162	Jun 30/14		11190	Jun 30/14
	11163	Jun 30/14		11191	Jun 30/14
	11164	Jun 30/14		11192	Jun 30/14
	11165	Jun 30/14		11193	Jun 30/14
	11166	Jun 30/14		11194	Jun 30/14
	11167	Jun 30/14		11195	Jun 30/14
	11168	Sep 30/17		11196	Jun 30/14
	11169	Sep 30/17		11197	Jun 30/14
	11170	Sep 30/17		11198	Apr 30/16
	11171	Sep 30/17		11199	Apr 30/16
	11172	Sep 30/17		11200	Apr 30/16
	11173	Sep 30/17		11201	Apr 30/16
	11174	Sep 30/17		11202	Apr 30/16
	11175	Sep 30/17		11203	Apr 30/16
	11176	Sep 30/17		11204	Apr 30/16
	11177	Sep 30/17		11205	Apr 30/16
	11178	Sep 30/17		11206	Apr 30/16
	11179	Jun 30/14		11207	Jun 30/14
	11180	Sep 30/17		11208	Sep 30/17
	11181	Sep 30/17		11209	Sep 30/17
	11182	Sep 30/17		11210	Sep 30/17
	11183	Sep 30/17		11211	Sep 30/17

SUBJECT.	PAGE	DATE	SUBJECT.	PAGE	DATE
	11212	Sep 30/17		11241	Jun 30/14
	11213	Sep 30/17		11242	Jul 31/15
	11214	Sep 30/17		11243	Jul 31/15
	11215	Jun 30/14		11244	Jul 31/15
	11216	Sep 30/17		11245	Jul 31/15
	11217	Sep 30/17		11246	Jul 31/15
	11218	Sep 30/17		11247	Jul 31/15
	11219	Sep 30/17		11248	Jul 31/15
	11220	Sep 30/17		11249	Jul 31/15
	11221	Sep 30/17		11250	Jul 31/15
	11222	Sep 30/17		11251	Jul 31/15
	11223	Jun 30/14		11252	Jul 31/15
	11224	Jun 30/14		11253	Jun 30/14
	11225	Jun 30/14		11254	Feb 29/16
	11226	Jun 30/14		11255	Feb 29/16
	11227	Jun 30/14		11256	Feb 29/16
	11228	Jan 31/16		11257	Feb 29/16
	11229	Jan 31/16		11258	Feb 29/16
	11230	Jan 31/16		11259	Feb 29/16
	11231	Jan 31/16		11260	Feb 29/16
	11232	Jan 31/16		11261	Feb 29/16
	11233	Jan 31/16		11262	Feb 29/16
	11234	Jan 31/16		11263	Feb 29/16
	11235	Jan 31/16		11264	Feb 29/16
	11236	Jan 31/16		11265	Jun 30/14
	11237	Jan 31/16		11266	Jun 30/15
	11238	Jan 31/16		11267	Jun 30/15
	11239	Jan 31/16		11268	Jun 30/15
	11240	Jan 31/16		11269	Jun 30/15
				11270	Jun 30/15

SUBJECT.	PAGE	DATE	SUBJECT.	PAGE	DATE
	11271	Jun 30/15		11301	Feb 29/16
	11272	Jun 30/15		11302	Feb 29/16
	11273	Jun 30/15		11303	Feb 29/16
	11274	Jun 30/15		11304	Feb 29/16
	11275	Jun 30/15		11305	Feb 29/16
	11276	Jun 30/15		11306	Feb 29/16
	11277	Jun 30/14		11307	Feb 29/16
	11278	Feb 29/16		11308	Feb 29/16
	11279	Feb 29/16		11309	Feb 29/16
	11280	Feb 29/16		11310	Feb 29/16
	11281	Feb 29/16		11311	Jun 30/14
	11282	Feb 29/16		11312	Jul 31/15
	11283	Feb 29/16		11313	Jul 31/15
	11284	Feb 29/16		11314	Jul 31/15
	11285	Feb 29/16		11315	Jul 31/15
	11286	Feb 29/16		11316	Jul 31/15
	11287	Jun 30/14		11317	Jul 31/15
	11288	Feb 29/16		11318	Jul 31/15
	11289	Feb 29/16		11319	Jul 31/15
	11290	Feb 29/16		11320	Jul 31/15
	11291	Feb 29/16		11321	Jul 31/15
	11292	Feb 29/16		11322	Jul 31/15
	11293	Feb 29/16		11323	Jun 30/14
	11294	Feb 29/16		11324	Feb 29/16
	11295	Feb 29/16		11325	Feb 29/16
	11296	Feb 29/16		11326	Feb 29/16
	11297	Feb 29/16		11327	Feb 29/16
	11298	Feb 29/16		11328	Feb 29/16
	11299	Jun 30/14		11329	Feb 29/16
	11300	Feb 29/16		11330	Feb 29/16

SUBJECT.	PAGE	DATE	SUBJECT.	PAGE	DATE
	11331	Feb 29/16		11361	Jan 31/16
	11332	Feb 29/16		11362	Jan 31/16
	11333	Feb 29/16		11363	Jun 30/14
	11334	Feb 29/16		11364	Apr 30/15
	11335	Jun 30/14		11365	Apr 30/15
	11336	Feb 29/16		11366	Apr 30/15
	11337	Feb 29/16		11367	Apr 30/15
	11338	Feb 29/16		11368	Apr 30/15
	11339	Feb 29/16		11369	Apr 30/15
	11340	Feb 29/16		11370	Apr 30/15
	11341	Feb 29/16		11371	Apr 30/15
	11342	Feb 29/16		11372	Apr 30/15
	11343	Feb 29/16		11373	Apr 30/15
	11344	Feb 29/16		11374	Apr 30/15
	11345	Feb 29/16		11375	Jun 30/14
	11346	Feb 29/16		11376	Sep 30/18
	11347	Feb 29/16		11377	Sep 30/18
	11348	Feb 29/16		11378	Sep 30/18
	11349	Jun 30/14		11379	Sep 30/18
	11350	Jan 31/16		11380	Sep 30/18
	11351	Jan 31/16		11381	Sep 30/18
	11352	Jan 31/16		11382	Sep 30/18
	11353	Jan 31/16		11383	Sep 30/18
	11354	Jan 31/16		11384	Sep 30/18
	11355	Jan 31/16		11385	Sep 30/18
	11356	Jan 31/16		11386	Sep 30/18
	11357	Jan 31/16		11387	Sep 30/18
	11358	Jan 31/16			
	11359	Jan 31/16			
	11360	Jan 31/16			

SUBJECT.	PAGE	DATE	SUBJECT.	PAGE	DATE
	11388	Sep 30/18		11415	Sep 30/17
	11389	Jun 30/14		11416	Sep 30/17
	11390	Sep 30/17		11417	Sep 30/17
	11391	Sep 30/17		11418	Sep 30/17
	11392	Sep 30/17		11419	Jun 30/14
	11393	Sep 30/17		11420	Feb 29/16
	11394	Sep 30/17		11421	Feb 29/16
	11395	Sep 30/17		11422	Feb 29/16
	11396	Sep 30/17		11423	Feb 29/16
	11397	Sep 30/17		11424	Feb 29/16
	11398	Sep 30/17		11425	Feb 29/16
	11399	Sep 30/17		11426	Feb 29/16
	11400	Sep 30/17		11427	Feb 29/16
	11401	Sep 30/17		11428	Feb 29/16
	11402	Sep 30/17		11429	Feb 29/16
	11403	Jun 30/14		11430	Feb 29/16
	11404	Sep 30/17		11431	Jun 30/14
	11405	Sep 30/17		11432	Jun 30/14
	11406	Sep 30/17		11433	Jun 30/14
	11407	Sep 30/17		11434	Jun 30/14
	11408	Sep 30/17		11435	Jun 30/14
	11409	Sep 30/17		11436	Jun 30/14
	11410	Sep 30/17		11437	Jun 30/14
	11411	Sep 30/17		11438	Jun 30/14
	11412	Sep 30/17		11439	Jun 30/14
	11413	Sep 30/17		11440	Jun 30/14
	11414	Sep 30/17		11441	Jun 30/14
				11442	Jun 30/14
				11443	Jun 30/14

SUBJECT.	PAGE	DATE	SUBJECT.	PAGE	DATE
	11444	Jul 31/15		11474	Feb 29/16
	11445	Jul 31/15		11475	Feb 29/16
	11446	Jul 31/15		11476	Feb 29/16
	11447	Jul 31/15		11477	Feb 29/16
	11448	Jul 31/15		11478	Feb 29/16
	11449	Jul 31/15		11479	Feb 29/16
	11450	Jul 31/15		11480	Feb 29/16
	11451	Jul 31/15		11481	Jun 30/14
	11452	Jul 31/15		11482	Jul 31/15
	11453	Jul 31/15		11483	Jul 31/15
	11454	Jul 31/15		11484	Jul 31/15
	11455	Jun 30/14		11485	Jul 31/15
	11456	Nov 30/16		11486	Jul 31/15
	11457	Nov 30/16		11487	Jul 31/15
	11458	Nov 30/16		11488	Jul 31/15
	11459	Nov 30/16		11489	Jul 31/15
	11460	Nov 30/16		11490	Jul 31/15
	11461	Nov 30/16		11491	Jul 31/15
	11462	Nov 30/16		11492	Jul 31/15
	11463	Nov 30/16		11493	Jun 30/14
	11464	Nov 30/16		11494	Sep 30/17
	11465	Nov 30/16		11495	Sep 30/17
	11466	Nov 30/16		11496	Sep 30/17
	11467	Nov 30/16		11497	Sep 30/17
	11468	Nov 30/16		11498	Sep 30/17
	11469	Jun 30/14		11499	Sep 30/17
	11470	Feb 29/16		11500	Sep 30/17
	11471	Feb 29/16		11501	Sep 30/17
	11472	Feb 29/16		11502	Sep 30/17
	11473	Feb 29/16			

SUBJECT.	PAGE	DATE
	11503	Sep 30/17
	11504	Sep 30/17
	11505	Sep 30/17
	11506	Sep 30/17
	11507	Jun 30/14
	11508	Jan 31/16
	11509	Jan 31/16
	11510	Jan 31/16
	11511	Jan 31/16
	11512	Jan 31/16
	11513	Jan 31/16
	11514	Jan 31/16
	11515	Jan 31/16
	11516	Jan 31/16
	11517	Jan 31/16
	11518	Jan 31/16
	11519	Jan 31/16
	11520	Jan 31/16
	11521	Jun 30/14
	11522	Jan 31/16
	11523	Jan 31/16
	11524	Jan 31/16
	11525	Jan 31/16
	11526	Jan 31/16
	11527	Jan 31/16
	11528	Jan 31/16
	11529	Jan 31/16
	11530	Jan 31/16
	11531	Jan 31/16

SUBJECT.	PAGE	DATE
	11532	Jan 31/16
	11533	Jan 31/16
	11534	Jan 31/16
	11535	Jan 31/16
	11536	Jan 31/16
	11537	Jun 30/14
	11538	Jun 30/14
	11539	Jun 30/14
	11540	Jun 30/14
	11541	Jun 30/14
	11542	Jun 30/14
	11543	Jun 30/14
	11544	Jun 30/14
	11545	Jun 30/14
	11546	Jun 30/15
	11547	Jun 30/15
	11548	Jun 30/15
	11549	Jun 30/15
	11550	Jun 30/15
	11551	Jun 30/15
	11552	Jun 30/15
	11553	Jun 30/15
	11554	Jun 30/15
	11555	Jun 30/14
	11556	Jun 30/14
	11557	Jun 30/14
	11558	Jun 30/14
	11559	Jun 30/14
	11560	Jun 30/14
	11561	Jun 30/14

SUBJECT.	PAGE	DATE	SUBJECT.	PAGE	DATE
	11562	Jun 30/14		11592	Jun 30/14
	11563	Jun 30/14		11593	Jun 30/14
	11564	Jun 30/14		11594	Jun 30/14
	11565	Jun 30/14		11595	Jun 30/14
	11566	Jun 30/14		11596	Jun 30/14
	11567	Jun 30/14		11597	Jun 30/14
	11568	Jun 30/14		11598	Jun 30/14
	11569	Jun 30/14		11599	Jun 30/14
	11570	Jun 30/14		11600	Jun 30/14
	11571	Jun 30/14		11601	Jun 30/14
	11572	Jun 30/14		11602	Sep 30/17
	11573	Jun 30/14		11603	Sep 30/17
	11574	Jun 30/14		11604	Sep 30/17
	11575	Jun 30/14		11605	Sep 30/17
	11576	Jun 30/14		11606	Sep 30/17
	11577	Jun 30/14		11607	Sep 30/17
	11578	Jun 30/14		11608	Sep 30/17
	11579	Jun 30/14		11609	Jun 30/14
	11580	Jun 30/14		11610	Jun 30/14
	11581	Jun 30/14		11611	Jun 30/14
	11582	Jun 30/14		11612	Jun 30/14
	11583	Jun 30/14		11613	Jun 30/14
	11584	Jun 30/14		11614	Jun 30/14
	11585	Jun 30/14		11615	Jun 30/14
	11586	Jun 30/14		11616	Jun 30/14
	11587	Jun 30/14		11617	Jun 30/14
	11588	Jun 30/14		11618	Jun 30/14
	11589	Jun 30/14		11619	Jun 30/14
	11590	Jun 30/14		11620	Jun 30/14
	11591	Jun 30/14			

SUBJECT.	PAGE	DATE	SUBJECT.	PAGE	DATE
	11621	Jun 30/14		11650	Jun 30/14
	11622	Nov 30/16		11651	Jun 30/14
	11623	Nov 30/16		11652	Jun 30/14
	11624	Nov 30/16		11653	Jun 30/14
	11625	Nov 30/16		11654	Jun 30/14
	11626	Nov 30/16		11655	Jun 30/14
	11627	Nov 30/16		11656	Jun 30/14
	11628	Nov 30/16		11657	Jun 30/14
	11629	Jun 30/14		11658	Jun 30/14
	11630	Jun 30/14		11659	Jun 30/14
	11631	Jun 30/14		11660	Jun 30/14
	11632	Jun 30/14		11661	Jun 30/14
	11633	Jun 30/14		11662	Sep 30/17
	11634	Jun 30/14		11663	Sep 30/17
	11635	Jun 30/14		11664	Sep 30/17
	11636	Jun 30/14		11665	Sep 30/17
	11637	Jun 30/14		11666	Sep 30/17
	11638	Jun 30/14		11667	Sep 30/17
	11639	Jun 30/14		11668	Sep 30/17
	11640	Jun 30/14		11669	Sep 30/17
	11641	Jun 30/14		11670	Sep 30/17
	11642	Sep 30/17		11671	Jun 30/14
	11643	Sep 30/17		11672	Sep 30/17
	11644	Sep 30/17		11673	Sep 30/17
	11645	Sep 30/17		11674	Sep 30/17
	11646	Sep 30/17		11675	Sep 30/17
	11647	Sep 30/17		11676	Sep 30/17
	11648	Sep 30/17		11677	Sep 30/17
	11649	Jun 30/14			

SUBJECT.	PAGE	DATE	SUBJECT.	PAGE	DATE
	11678	Sep 30/17		11706	Nov 30/14
	11679	Sep 30/17		11707	Jun 30/14
	11680	Sep 30/17		11708	Sep 30/17
	11681	Jun 30/14		11709	Sep 30/17
	11682	Sep 30/17		11710	Sep 30/17
	11683	Sep 30/17		11711	Sep 30/17
	11684	Sep 30/17		11712	Sep 30/17
	11685	Sep 30/17		11713	Sep 30/17
	11686	Sep 30/17		11714	Sep 30/17
	11687	Sep 30/17		11715	Sep 30/17
	11688	Sep 30/17		11716	Sep 30/17
	11689	Sep 30/17		11717	Jun 30/14
	11690	Sep 30/17		11718	Jan 31/16
	11691	Jun 30/14		11719	Jan 31/16
	11692	Jan 31/16		11720	Jan 31/16
	11693	Jan 31/16		11721	Jan 31/16
	11694	Jan 31/16		11722	Jan 31/16
	11695	Jan 31/16		11723	Jan 31/16
	11696	Jan 31/16		11724	Jan 31/16
	11697	Jan 31/16		11725	Jan 31/16
	11698	Jan 31/16		11726	Jan 31/16
	11699	Jun 30/14		11727	Jun 30/14
	11700	Nov 30/14		11728	Jul 31/15
	11701	Nov 30/14		11729	Jul 31/15
	11702	Nov 30/14		11730	Jul 31/15
	11703	Nov 30/14		11731	Jul 31/15
	11704	Nov 30/14		11732	Jul 31/15
	11705	Nov 30/14		11733	Jul 31/15
				11734	Jul 31/15

SUBJECT.	PAGE	DATE	SUBJECT.	PAGE	DATE
	11735	Jul 31/15		11765	Nov 12/19
	11736	Jul 31/15		11766	Nov 12/19
	11737	Jul 31/15		11767	Nov 12/19
	11738	Jul 31/15		11768	Nov 12/19
	11739	Jun 30/14		11769	Nov 12/19
	11740	Jun 30/14		11770	Nov 12/19
	11741	Jun 30/14		11771	Nov 12/19
	11742	Jun 30/14		11772	Nov 12/19
	11743	Jun 30/14		11773	Nov 12/19
	11744	Jun 30/14		11774	Nov 12/19
	11745	Jun 30/14		11775	Nov 12/19
	11746	Jun 30/14		11776	Nov 12/19
	11747	Jun 30/14		11777	Nov 12/19
	11748	Jun 30/14		11778	Nov 12/19
	11749	Jun 30/14		11779	Nov 12/19
	11750	Jun 30/14		11780	Nov 12/19
	11751	Jun 30/14		11781	Nov 12/19
	11752	Jun 30/14		11782	Nov 12/19
	11753	Jun 30/14		11783	Nov 12/19
	11754	Jun 30/14		11784	Nov 12/19
	11755	Jun 30/14		11785	Nov 12/19
	11756	Jun 30/14		11786	Nov 12/19
	11757	Jun 30/14		11787	Nov 12/19
	11758	Jun 30/14		11788	Nov 12/19
	11759	Jun 30/14		11789	Nov 12/19
	11760	Jun 30/14		11790	Nov 12/19
	11761	Jun 30/14		11791	Nov 12/19
	11762	Jun 30/14		11792	Nov 12/19
	11763	Nov 12/19		11793	Nov 12/19
	11764	Nov 12/19		11794	Nov 12/19

SUBJECT.	PAGE	DATE	SUBJECT.	PAGE	DATE
	11795	Nov 12/19		11825	Nov 12/19
	11796	Nov 12/19		11826	Nov 12/19
	11797	Nov 12/19		11827	Nov 12/19
	11798	Nov 12/19		11828	Nov 12/19
	11799	Nov 12/19		11829	Nov 12/19
	11800	Nov 12/19		11830	Nov 12/19
	11801	Nov 12/19		11831	Nov 12/19
	11802	Nov 12/19		11832	Nov 12/19
	11803	Nov 12/19		11833	Nov 12/19
	11804	Nov 12/19		11834	Nov 12/19
	11805	Nov 12/19		11835	Nov 12/19
	11806	Nov 12/19		11836	Nov 12/19
	11807	Nov 12/19		11837	Nov 12/19
	11808	Nov 12/19		11838	Nov 12/19
	11809	Nov 12/19		11839	Nov 12/19
	11810	Nov 12/19		11840	Nov 12/19
	11811	Nov 12/19		11841	Nov 12/19
	11812	Nov 12/19		11842	Nov 12/19
	11813	Nov 12/19		11843	Nov 12/19
	11814	Nov 12/19		11844	Nov 12/19
	11815	Nov 12/19		11845	Nov 12/19
	11816	Nov 12/19		11846	Nov 12/19
	11817	Nov 12/19		11847	Nov 12/19
	11818	Nov 12/19		11848	Nov 12/19
	11819	Nov 12/19		11849	Nov 12/19
	11820	Nov 12/19		11850	Nov 12/19
	11821	Nov 12/19		11851	Nov 12/19
	11822	Nov 12/19		11852	Nov 12/19
	11823	Nov 12/19		11853	Nov 12/19
	11824	Nov 12/19		11854	Nov 12/19

SUBJECT.	PAGE	DATE	SUBJECT.	PAGE	DATE
	11855	Nov 12/19		11885	Nov 12/19
	11856	Nov 12/19		11886	Nov 12/19
	11857	Nov 12/19		11887	Nov 12/19
	11858	Nov 12/19		11888	Nov 12/19
	11859	Nov 12/19		11889	Nov 12/19
	11860	Nov 12/19		11890	Nov 12/19
	11861	Nov 12/19		11891	Nov 12/19
	11862	Nov 12/19		11892	Nov 12/19
	11863	Nov 12/19		11893	Nov 12/19
	11864	Nov 12/19		11894	Nov 12/19
	11865	Nov 12/19		11895	Jun 30/14
	11866	Nov 12/19		11896	Oct 03/23
	11867	Nov 12/19		11897	Oct 03/23
	11868	Nov 12/19		11898	Oct 03/23
	11869	Nov 12/19		11899	Oct 03/23
	11870	Nov 12/19		11900	Oct 03/23
	11871	Nov 12/19		11901	Oct 03/23
	11872	Nov 12/19		11902	Oct 03/23
	11873	Nov 12/19		11903	Oct 03/23
	11874	Nov 12/19		11904	Oct 03/23
	11875	Nov 12/19		11905	Jun 30/14
	11876	Nov 12/19		11906	Jun 30/14
	11877	Nov 12/19		11907	Jun 30/14
	11878	Nov 12/19		11908	Jun 30/14
	11879	Nov 12/19		11909	Jun 30/14
	11880	Nov 12/19		11910	Jun 30/14
	11881	Nov 12/19		11911	Jun 30/14
	11882	Nov 12/19		11912	Jun 30/14
	11883	Nov 12/19		11913	Jun 30/14
	11884	Nov 12/19		11914	Jun 30/14

SUBJECT.	PAGE	DATE	SUBJECT.	PAGE	DATE
	11915	Jun 30/14		11943	Oct 03/23
	11916	Oct 03/23		11944	Oct 03/23
	11917	Oct 03/23		11945	Oct 03/23
	11918	Oct 03/23		11946	Oct 03/23
	11919	Oct 03/23		11947	Oct 03/23
	11920	Oct 03/23		11948	Oct 03/23
	11921	Jun 30/14		11949	Oct 03/23
	11922	Sep 30/17		11950	Oct 03/23
	11923	Sep 30/17		11951	Jun 30/14
	11924	Sep 30/17		11952	Oct 03/23
	11925	Sep 30/17		11953	Oct 03/23
	11926	Sep 30/17		11954	Oct 03/23
	11927	Sep 30/17		11955	Oct 03/23
	11928	Sep 30/17		11956	Oct 03/23
	11929	Sep 30/17		11957	Oct 03/23
	11930	Sep 30/17		11958	Oct 03/23
	11931	Sep 30/17		11959	Oct 03/23
	11932	Sep 30/17		11960	Oct 03/23
	11933	Sep 30/17		11961	Oct 03/23
	11934	Sep 30/17		11962	Oct 03/23
	11935	Sep 30/17		11963	Jun 30/14
	11936	Sep 30/17		11964	Jun 30/14
	11937	Jun 30/14		11965	Jun 30/14
	11938	Oct 03/23		11966	Jun 30/14
	11939	Oct 03/23		11967	Jun 30/14
	11940	Oct 03/23		11968	Oct 03/23
	11941	Oct 03/23		11969	Oct 03/23
	11942	Oct 03/23		11970	Oct 03/23
				11971	Oct 03/23
				11972	Oct 03/23

SUBJECT.	PAGE	DATE	SUBJECT.	PAGE	DATE
	11973	Oct 03/23		12003	Nov 30/16
	11974	Oct 03/23		12004	Nov 30/16
	11975	Oct 03/23		12005	Nov 30/16
	11976	Oct 03/23		12006	Nov 30/16
	11977	Oct 03/23		12007	Jun 30/14
	11978	Oct 03/23		12008	Nov 30/16
	11979	Oct 03/23		12009	Nov 30/16
	11980	Oct 03/23		12010	Nov 30/16
	11981	Oct 03/23		12011	Nov 30/16
	11982	Oct 03/23		12012	Nov 30/16
	11983	Jun 30/14		12013	Jun 30/14
	11984	Jun 30/14		12014	Jun 30/14
	11985	Jun 30/14		12015	Jun 30/14
	11986	Jun 30/14		12016	Jun 30/14
	11987	Jun 30/14		12017	Jun 30/14
	11988	Jun 30/14		12018	Jun 30/14
	11989	Jun 30/14		12019	Jun 30/14
	11990	Jun 30/14		12020	Jun 30/14
	11991	Jun 30/14		12021	Jun 30/14
	11992	Jun 30/14		12022	Jun 30/14
	11993	Jun 30/14		12023	Jun 30/14
	11994	Jun 30/14		12024	Nov 30/16
	11995	Jun 30/14		12025	Nov 30/16
	11996	Nov 30/16		12026	Nov 30/16
	11997	Nov 30/16		12027	Nov 30/16
	11998	Nov 30/16		12028	Nov 30/16
	11999	Nov 30/16		12029	Nov 30/16
	12000	Nov 30/16		12030	Nov 30/16
	12001	Nov 30/16		12031	Nov 30/16
	12002	Nov 30/16		12032	Nov 30/16

SUBJECT.	PAGE	DATE	SUBJECT.	PAGE	DATE
	12033	Nov 30/16		12061	Nov 30/16
	12034	Nov 30/16		12062	Nov 30/16
	12035	Jun 30/14		12063	Jun 30/14
	12036	Sep 30/17		12064	Nov 30/16
	12037	Sep 30/17		12065	Nov 30/16
	12038	Sep 30/17		12066	Nov 30/16
	12039	Sep 30/17		12067	Nov 30/16
	12040	Sep 30/17		12068	Nov 30/16
	12041	Sep 30/17		12069	Nov 30/16
	12042	Sep 30/17		12070	Nov 30/16
	12043	Sep 30/17		12071	Nov 30/16
	12044	Sep 30/17		12072	Nov 30/16
	12045	Jun 30/14		12073	Jun 30/14
	12046	Sep 30/18		12074	Sep 30/17
	12047	Sep 30/18		12075	Sep 30/17
	12048	Sep 30/18		12076	Sep 30/17
	12049	Sep 30/18		12077	Sep 30/17
	12050	Sep 30/18		12078	Sep 30/17
	12051	Sep 30/18		12079	Sep 30/17
	12052	Sep 30/18		12080	Sep 30/17
	12053	Jun 30/14		12081	Sep 30/17
	12054	Jun 30/14		12082	Sep 30/17
	12055	Jun 30/14		12083	Jun 30/14
	12056	Jun 30/14		12084	Nov 30/14
	12057	Jun 30/14		12085	Nov 30/14
	12058	Nov 30/16		12086	Nov 30/14
	12059	Nov 30/16		12087	Nov 30/14
	12060	Nov 30/16		12088	Nov 30/14
				12089	Nov 30/14

SUBJECT.	PAGE	DATE	SUBJECT.	PAGE	DATE
	12090	Nov 30/14		12118	Sep 30/17
	12091	Jun 30/14		12119	Sep 30/17
	12092	Jun 30/14		12120	Sep 30/17
	12093	Jun 30/14		12121	Sep 30/17
	12094	Jun 30/14		12122	Sep 30/17
	12095	Jun 30/14		12123	Jun 30/14
	12096	Jun 30/14		12124	Sep 30/17
	12097	Jun 30/14		12125	Sep 30/17
	12098	Jun 30/14		12126	Sep 30/17
	12099	Jun 30/14		12127	Sep 30/17
	12100	Jun 30/14		12128	Sep 30/17
	12101	Jun 30/14		12129	Sep 30/17
	12102	Jun 30/14		12130	Sep 30/17
	12103	Jun 30/14		12131	Jun 30/14
	12104	Sep 30/17		12132	Jun 30/14
	12105	Sep 30/17		12133	Jun 30/14
	12106	Sep 30/17		12134	Jun 30/14
	12107	Sep 30/17		12135	Jun 30/14
	12108	Sep 30/17		12136	Jun 30/14
	12109	Sep 30/17		12137	Jun 30/14
	12110	Sep 30/17		12138	Jun 30/14
	12111	Sep 30/17		12139	Jun 30/14
	12112	Sep 30/17		12140	Jun 30/14
	12113	Jun 30/14		12141	Jun 30/14
	12114	Sep 30/17		12142	Jun 30/14
	12115	Sep 30/17		12143	Jun 30/14
	12116	Sep 30/17		12144	Jun 30/14
	12117	Sep 30/17		12145	Jun 30/14

SUBJECT.	PAGE	DATE
	12146	Jun 30/14
	12147	Jun 30/14
	12148	Jun 30/14
	12149	Jun 30/14
	12150	Jun 30/14
	12151	Jun 30/14
	12152	Jun 30/14
	12153	Jun 30/14
	12154	Jun 30/14
	12155	Jun 30/14
	12156	Jun 30/14
	12157	Jun 30/14
	12158	Jun 30/14
	12159	Jun 30/14
	12160	Jun 30/14
	12161	Jun 30/14
	12162	Jun 30/14
	12163	Jun 30/14
	12164	Jun 30/14
	12165	Jun 30/14
	12166	Jun 30/14
	12167	Jun 30/14
	12168	Sep 30/17
	12169	Sep 30/17
	12170	Sep 30/17
	12171	Sep 30/17
	12172	Sep 30/17
	12173	Sep 30/17
	12174	Sep 30/17

SUBJECT.	PAGE	DATE
	12175	Sep 30/17
	12176	Sep 30/17
	12177	Sep 30/17
	12178	Sep 30/17
	12179	Jun 30/14
	12180	Jun 30/14
	12181	Jun 30/14
	12182	Jun 30/14
	12183	Jun 30/14
	12184	Jun 30/14
	12185	Jun 30/14
	12186	Jun 30/14
	12187	Jun 30/14
	12188	Jun 30/14
	12189	Jun 30/14
	12190	Jun 30/14
	12191	Jun 30/14
	12192	Jun 30/14
	12193	Sep 30/17
	12194	Sep 30/17
	12195	Sep 30/17
	12196	Sep 30/17
	12197	Jun 30/14
	12198	Jun 30/15
	12199	Jun 30/15
	12200	Jun 30/15
	12201	Jun 30/15
	12202	Jun 30/15
	12203	Jun 30/15

SUBJECT.	PAGE	DATE	SUBJECT.	PAGE	DATE
	12204	Jun 30/15		12233	Jun 30/14
	12205	Jun 30/15		12234	Jun 30/14
	12206	Jun 30/15		12235	Jun 30/14
	12207	Jun 30/14		12236	Jun 30/14
	12208	Jun 30/14		12237	Jun 30/14
	12209	Jun 30/14		12238	Jun 30/14
	12210	Jun 30/14		12239	Jun 30/14
	12211	Jun 30/14		12240	Jun 30/14
	12212	Jun 30/14		12241	Jun 30/14
	12213	Jun 30/14		12242	Jun 30/14
	12214	Jun 30/14		12243	Jun 30/14
	12215	Jun 30/14		12244	Jun 30/14
	12216	Sep 30/17		12245	Jun 30/14
	12217	Sep 30/17		12246	Jun 30/14
	12218	Sep 30/17		12247	Jun 30/14
	12219	Sep 30/17		12248	Jun 30/14
	12220	Sep 30/17		12249	Jun 30/14
	12221	Sep 30/17		12250	Jun 30/14
	12222	Sep 30/17		12251	Jun 30/14
	12223	Sep 30/17		12252	Sep 30/17
	12224	Sep 30/17		12253	Sep 30/17
	12225	Sep 30/17		12254	Sep 30/17
	12226	Sep 30/17		12255	Sep 30/17
	12227	Jun 30/14		12256	Sep 30/17
	12228	Jun 30/14		12257	Sep 30/17
	12229	Jun 30/14		12258	Sep 30/17
	12230	Jun 30/14		12259	Sep 30/17
	12231	Jun 30/14		12260	Sep 30/17
	12232	Jun 30/14		12261	Sep 30/17

SUBJECT.	PAGE	DATE	SUBJECT.	PAGE	DATE
	12262	Sep 30/17		12290	Sep 30/17
	12263	Sep 30/17		12291	Sep 30/17
	12264	Sep 30/17		12292	Sep 30/17
	12265	Sep 30/17		12293	Sep 30/17
	12266	Sep 30/17		12294	Sep 30/17
	12267	Jun 30/14		12295	Sep 30/17
	12268	Sep 30/17		12296	Sep 30/17
	12269	Sep 30/17		12297	Sep 30/17
	12270	Sep 30/17		12298	Sep 30/17
	12271	Sep 30/17		12299	Sep 30/17
	12272	Sep 30/17		12300	Sep 30/17
	12273	Sep 30/17		12301	Sep 30/17
	12274	Sep 30/17		12302	Sep 30/17
	12275	Sep 30/17		12303	Jun 30/14
	12276	Sep 30/17		12304	Jun 30/14
	12277	Jun 30/14		12305	Jun 30/14
	12278	Jun 30/14		12306	Jun 30/14
	12279	Jun 30/14		12307	Jun 30/14
	12280	Jun 30/14		12308	Jun 30/14
	12281	Jun 30/14		12309	Jun 30/14
	12282	Sep 30/17		12310	Jun 30/14
	12283	Sep 30/17		12311	Jun 30/14
	12284	Sep 30/17		12312	Jun 30/14
	12285	Sep 30/17		12313	Jun 30/14
	12286	Sep 30/17		12314	Jun 30/14
	12287	Sep 30/17		12315	Jun 30/14
	12288	Sep 30/17		12316	Jun 30/14
	12289	Jun 30/14		12317	Jun 30/14

SUBJECT.	PAGE	DATE	SUBJECT.	PAGE	DATE
	12318	Jun 30/14		12348	Jun 30/14
	12319	Jun 30/14		12349	Jun 30/14
	12320	Jan 31/16		12350	Jun 30/14
	12321	Jan 31/16		12351	Jun 30/14
	12322	Jan 31/16		12352	Jun 30/14
	12323	Jan 31/16		12353	Jun 30/14
	12324	Jan 31/16		12354	Jun 30/14
	12325	Jan 31/16		12355	Jun 30/14
	12326	Jan 31/16		12356	Jun 30/14
	12327	Jan 31/16		12357	Jun 30/14
	12328	Jan 31/16		12358	Jun 30/14
	12329	Jun 30/14		12359	Jun 30/14
	12330	Jun 30/14		12360	Jun 30/14
	12331	Jun 30/14		12361	Jun 30/14
	12332	Jun 30/14		12362	Jun 30/14
	12333	Jun 30/14		12363	Jun 30/14
	12334	Jun 30/14		12364	Jun 30/15
	12335	Jun 30/14		12365	Jun 30/15
	12336	Jun 30/14		12366	Jun 30/15
	12337	Jun 30/14		12367	Jun 30/15
	12338	Jun 30/14		12368	Jun 30/15
	12339	Jun 30/14		12369	Jun 30/14
	12340	Jun 30/14		12370	Nov 12/19
	12341	Jun 30/14		12371	Nov 12/19
	12342	Jun 30/14		12372	Nov 12/19
	12343	Jun 30/14		12373	Nov 12/19
	12344	Jun 30/14		12374	Nov 12/19
	12345	Jun 30/14		12375	Nov 12/19
	12346	Jun 30/14		12376	Nov 12/19
	12347	Jun 30/14		12377	Nov 12/19

SUBJECT.	PAGE	DATE	SUBJECT.	PAGE	DATE
	12378	Nov 12/19		12408	Nov 12/19
	12379	Nov 12/19		12409	Jun 30/14
	12380	Nov 12/19		12410	Jun 30/14
	12381	Nov 12/19		12411	Jun 30/14
	12382	Nov 12/19		12412	Jun 30/14
	12383	Nov 12/19		12413	Jun 30/14
	12384	Nov 12/19		12414	Jun 30/14
	12385	Nov 12/19		12415	Jun 30/14
	12386	Nov 12/19		12416	Jun 30/14
	12387	Jun 30/14		12417	Jun 30/14
	12388	Jun 30/14		12418	Jun 30/15
	12389	Jun 30/14		12419	Jun 30/15
	12390	Jun 30/14		12420	Jun 30/15
	12391	Jun 30/14		12421	Jun 30/15
	12392	Jun 30/14		12422	Jun 30/15
	12393	Jun 30/14		12423	Jun 30/15
	12394	Jun 30/14		12424	Jun 30/15
	12395	Jun 30/14		12425	Jun 30/15
	12396	Jun 30/14		12426	Jun 30/15
	12397	Jun 30/14		12427	Jun 30/15
	12398	Jun 30/14		12428	Jun 30/15
	12399	Jun 30/14		12429	Jun 30/15
	12400	Jun 30/14		12430	Jun 30/15
	12401	Jun 30/14		12431	Jun 30/14
	12402	Jun 30/14		12432	Jun 30/14
	12403	Jun 30/14		12433	Jun 30/14
	12404	Nov 12/19		12434	Jun 30/14
	12405	Nov 12/19		12435	Jun 30/14
	12406	Nov 12/19		12436	Jun 30/14
	12407	Nov 12/19		12437	Jun 30/14

SUBJECT.	PAGE	DATE	SUBJECT.	PAGE	DATE
	12438	Jun 30/14		12466	Jun 30/14
	12439	Jun 30/14		12467	Jun 30/14
	12440	Sep 30/17		12468	Jun 30/14
	12441	Sep 30/17		12469	Jun 30/14
	12442	Sep 30/17		12470	Jun 30/14
	12443	Sep 30/17		12471	Jun 30/14
	12444	Sep 30/17		12472	Jun 30/14
	12445	Sep 30/17		12473	Jun 30/14
	12446	Sep 30/17		12474	Jun 30/14
	12447	Sep 30/17		12475	Jun 30/14
	12448	Sep 30/17		12476	Jun 30/14
	12449	Sep 30/17		12477	Jun 30/14
	12450	Sep 30/17		12478	Jun 30/14
	12451	Sep 30/17		12479	Jun 30/14
	12452	Sep 30/17		12480	Jun 30/15
	12453	Sep 30/17		12481	Jun 30/15
	12454	Sep 30/17		12482	Jun 30/15
	12455	Sep 30/17		12483	Jun 30/15
	12456	Sep 30/17		12484	Jun 30/15
	12457	Jun 30/14		12485	Jun 30/15
	12458	Jun 30/14		12486	Jun 30/15
	12459	Jun 30/14		12487	Jun 30/15
	12460	Jun 30/14		12488	Jun 30/15
	12461	Jun 30/14		12489	Jun 30/15
	12462	Jun 30/14		12490	Jun 30/15
	12463	Jun 30/14		12491	Jun 30/15
	12464	Jun 30/14		12492	Jun 30/15
	12465	Jun 30/14		12493	Jun 30/15
				12494	Jun 30/15
				12495	Jun 30/15

SUBJECT.	PAGE	DATE	SUBJECT.	PAGE	DATE
	12496	Jun 30/15		12526	Feb 29/16
	12497	Jun 30/14		12527	Feb 29/16
	12498	Jun 30/14		12528	Feb 29/16
	12499	Jun 30/14		12529	Jun 30/14
	12500	Jun 30/14		12530	Jan 31/16
	12501	Jun 30/14		12531	Jan 31/16
	12502	Jun 30/14		12532	Jan 31/16
	12503	Jun 30/14		12533	Jan 31/16
	12504	Jun 30/14		12534	Jan 31/16
	12505	Jun 30/14		12535	Jan 31/16
	12506	Jan 31/16		12536	Jan 31/16
	12507	Jan 31/16		12537	Jun 30/14
	12508	Jan 31/16		12538	Jun 30/14
	12509	Jan 31/16		12539	Jun 30/14
	12510	Jan 31/16		12540	Jun 30/14
	12511	Jan 31/16		12541	Jun 30/14
	12512	Jan 31/16		12542	Jun 30/14
	12513	Jan 31/16		12543	Jun 30/14
	12514	Jan 31/16		12544	Jun 30/14
	12515	Jun 30/14		12545	Feb 13/20
	12516	Feb 29/16		12546	Feb 13/20
	12517	Feb 29/16		12547	Feb 13/20
	12518	Feb 29/16		12548	Feb 13/20
	12519	Feb 29/16		12549	Feb 13/20
	12520	Feb 29/16		12550	Feb 13/20
	12521	Feb 29/16		12551	Feb 13/20
	12522	Feb 29/16		12552	Feb 13/20
	12523	Feb 29/16		12553	Feb 13/20
	12524	Feb 29/16		12554	Feb 13/20
	12525	Feb 29/16		12555	Feb 13/20

SUBJECT.	PAGE	DATE	SUBJECT.	PAGE	DATE
	12556	Feb 13/20		12586	Feb 29/16
	12557	Feb 13/20		12587	Feb 29/16
	12558	Feb 13/20		12588	Feb 29/16
	12559	Feb 13/20		12589	Feb 29/16
	12560	Feb 13/20		12590	Feb 29/16
	12561	Feb 13/20		12591	Feb 29/16
	12562	Feb 13/20		12592	Feb 29/16
	12563	Feb 13/20		12593	Feb 29/16
	12564	Feb 13/20		12594	Feb 29/16
	12565	Feb 13/20		12595	Feb 29/16
	12566	Feb 13/20		12596	Feb 29/16
	12567	Feb 13/20		12597	Jun 30/14
	12568	Feb 13/20		12598	Jun 30/14
	12569	Feb 13/20		12599	Jun 30/14
	12570	Feb 13/20		12600	Jul 31/15
	12571	Feb 13/20		12601	Jul 31/15
	12572	Feb 13/20		12602	Jul 31/15
	12573	Feb 13/20		12603	Jul 31/15
	12574	Feb 13/20		12604	Jul 31/15
	12575	Feb 13/20		12605	Jul 31/15
	12576	Feb 13/20		12606	Jul 31/15
	12577	Feb 13/20		12607	Jul 31/15
	12578	Feb 13/20		12608	Jul 31/15
	12579	Jun 30/14		12609	Jun 30/14
	12580	Feb 29/16		12610	Jun 30/14
	12581	Feb 29/16		12611	Jun 30/14
	12582	Feb 29/16		12612	Jun 30/14
	12583	Feb 29/16		12613	Jun 30/14
	12584	Feb 29/16		12614	Jun 30/14
	12585	Feb 29/16		12615	Jun 30/14

SUBJECT.	PAGE	DATE	SUBJECT.	PAGE	DATE
	12616	Jun 30/14		12644	Sep 30/17
	12617	Jun 30/14		12645	Jun 30/14
	12618	Jun 30/14		12646	Jun 30/14
	12619	Jun 30/14		12647	Jun 30/14
	12620	Jun 30/14		12648	Jun 30/14
	12621	Jun 30/14		12649	Jun 30/14
	12622	Jun 30/15		12650	Jun 30/14
	12623	Jun 30/15		12651	Jun 30/14
	12624	Jun 30/15		12652	Jun 30/14
	12625	Jun 30/15		12653	Jun 30/14
	12626	Jun 30/15		12654	Jun 30/14
	12627	Jun 30/14		12655	Jun 30/14
	12628	Sep 30/17		12656	Jun 30/14
	12629	Sep 30/17		12657	Jun 30/14
	12630	Sep 30/17		12658	Jun 30/14
	12631	Sep 30/17		12659	Jun 30/14
	12632	Sep 30/17		12660	Jun 30/14
	12633	Sep 30/17		12661	Jun 30/14
	12634	Sep 30/17		12662	Jun 30/14
	12635	Sep 30/17		12663	Jun 30/14
	12636	Sep 30/17		12664	Jun 30/14
	12637	Sep 30/17		12665	Jun 30/14
	12638	Sep 30/17		12666	Sep 30/17
	12639	Sep 30/17		12667	Sep 30/17
	12640	Sep 30/17		12668	Sep 30/17
	12641	Sep 30/17		12669	Sep 30/17
	12642	Sep 30/17		12670	Sep 30/17
	12643	Sep 30/17		12671	Sep 30/17
				12672	Sep 30/17

SUBJECT.	PAGE	DATE
	12673	Sep 30/17
	12674	Sep 30/17
	12675	Jun 30/14
	12676	Sep 30/17
	12677	Sep 30/17
	12678	Sep 30/17
	12679	Sep 30/17
	12680	Sep 30/17
	12681	Sep 30/17
	12682	Sep 30/17
	12683	Sep 30/17
	12684	Sep 30/17
	12685	Jun 30/14
	12686	Jun 30/15
	12687	Jun 30/15
	12688	Jun 30/15
	12689	Jun 30/15
	12690	Jun 30/15
	12691	Jun 30/15
	12692	Jun 30/15
	12693	Jun 30/15
	12694	Jun 30/15
	12695	Jun 30/15
	12696	Jun 30/15
	12697	Jun 30/14
	12698	Jun 30/14
	12699	Jun 30/14
	12700	Jun 30/14
	12701	Jun 30/14

SUBJECT.	PAGE	DATE
	12702	Jun 30/14
	12703	Jun 30/14
	12704	Jun 30/14
	12705	Jun 30/14
	12706	Jun 30/14
	12707	Jun 30/14
	12708	Jun 30/14
	12709	Jun 30/14
	12710	Jun 30/14
	12711	Jun 30/14
	12712	Sep 30/17
	12713	Sep 30/17
	12714	Sep 30/17
	12715	Sep 30/17
	12716	Sep 30/17
	12717	Sep 30/17
	12718	Sep 30/17
	12719	Sep 30/17
	12720	Sep 30/17
	12721	Sep 30/17
	12722	Sep 30/17
	12723	Sep 30/17
	12724	Sep 30/17
	12725	Sep 30/17
	12726	Sep 30/17
	12727	Jun 30/14
	12728	Jun 30/14
	12729	Jun 30/14

SUBJECT.	PAGE	DATE	SUBJECT.	PAGE	DATE
	12730	Jun 30/14		12760	Jun 30/14
	12731	Jun 30/14		12761	Jun 30/14
	12732	Jun 30/14		12762	Jun 30/14
	12733	Jun 30/14		12763	Jun 30/14
	12734	Jun 30/14		12764	Jun 30/14
	12735	Jun 30/14		12765	Jun 30/14
	12736	Jun 30/14		12766	Jul 31/15
	12737	Jun 30/14		12767	Jul 31/15
	12738	Jun 30/14		12768	Jul 31/15
	12739	Jun 30/14		12769	Jul 31/15
	12740	Jun 30/14		12770	Jul 31/15
	12741	Jun 30/14		12771	Jul 31/15
	12742	Jun 30/14		12772	Jul 31/15
	12743	Jun 30/14		12773	Jul 31/15
	12744	Jun 30/14		12774	Jul 31/15
	12745	Jun 30/14		12775	Jun 30/14
	12746	Jun 30/14		12776	Jun 30/14
	12747	Jun 30/14		12777	Jun 30/14
	12748	Jun 30/14		12778	Jun 30/14
	12749	Jun 30/14		12779	Jun 30/14
	12750	Jun 30/14		12780	Feb 29/16
	12751	Jun 30/14		12781	Feb 29/16
	12752	Jun 30/14		12782	Feb 29/16
	12753	Jun 30/14		12783	Feb 29/16
	12754	Jun 30/14		12784	Feb 29/16
	12755	Jun 30/14		12785	Feb 29/16
	12756	Jun 30/14		12786	Feb 29/16
	12757	Jun 30/14		12787	Feb 29/16
	12758	Jun 30/14		12788	Feb 29/16
	12759	Jun 30/14		12789	Feb 29/16

SUBJECT.	PAGE	DATE	SUBJECT.	PAGE	DATE
	12790	Feb 29/16		12820	Jun 30/15
	12791	Feb 29/16		12821	Jun 30/14
	12792	Feb 29/16		12822	Jun 30/14
	12793	Feb 29/16		12823	Jun 30/14
	12794	Feb 29/16		12824	Jun 30/14
	12795	Feb 29/16		12825	Jun 30/14
	12796	Feb 29/16		12826	Jun 30/14
	12797	Jun 30/14		12827	Jun 30/14
	12798	Jun 30/14		12828	Jun 30/14
	12799	Jun 30/14		12829	Jun 30/14
	12800	Jun 30/14		12830	Jun 30/14
	12801	Jun 30/14		12831	Jun 30/14
	12802	Jun 30/15		12832	Jun 30/14
	12803	Jun 30/15		12833	Jun 30/14
	12804	Jun 30/15		12834	Jun 30/14
	12805	Jun 30/15		12835	Jun 30/14
	12806	Jun 30/15		12836	Jun 30/14
	12807	Jun 30/14		12837	Jun 30/14
	12808	Jun 30/15		12838	Jun 30/14
	12809	Jun 30/15		12839	Jun 30/14
	12810	Jun 30/15		12840	Jun 30/14
	12811	Jun 30/15		12841	Jun 30/14
	12812	Jun 30/15		12842	Jun 30/14
	12813	Jun 30/15		12843	Jun 30/14
	12814	Jun 30/15		12844	Jun 30/14
	12815	Jun 30/15		12845	Jun 30/14
	12816	Jun 30/15		12846	Jun 30/14
	12817	Jun 30/15		12847	Jun 30/14
	12818	Jun 30/15		12848	Jun 30/14
	12819	Jun 30/15		12849	Jun 30/14

SUBJECT.	PAGE	DATE	SUBJECT.	PAGE	DATE
	12850	Jun 30/14		12879	Jun 30/14
	12851	Jun 30/14		12880	Jun 30/14
	12852	Jun 30/14		12881	Jun 30/14
	12853	Jun 30/14		12882	Jun 30/14
	12854	Jun 30/14		12883	Jun 30/14
	12855	Jun 30/14		12884	Jun 30/14
	12856	Jun 30/14		12885	Jun 30/14
	12857	Jun 30/14		12886	Jun 30/14
	12858	Sep 30/17		12887	Jun 30/14
	12859	Sep 30/17		12888	Jun 30/14
	12860	Sep 30/17		12889	Jun 30/14
	12861	Sep 30/17		12890	Sep 30/17
	12862	Sep 30/17		12891	Sep 30/17
	12863	Sep 30/17		12892	Sep 30/17
	12864	Sep 30/17		12893	Sep 30/17
	12865	Sep 30/17		12894	Sep 30/17
	12866	Sep 30/17		12895	Sep 30/17
	12867	Jun 30/14		12896	Sep 30/17
	12868	Jun 30/14		12897	Jun 30/14
	12869	Jun 30/14		12898	Jun 30/14
	12870	Jun 30/14		12899	Jun 30/14
	12871	Jun 30/14		12900	Jun 30/14
	12872	Jun 30/14		12901	Jun 30/14
	12873	Jun 30/14		12902	Sep 30/17
	12874	Jun 30/14		12903	Sep 30/17
	12875	Jun 30/14		12904	Sep 30/17
	12876	Jun 30/14		12905	Sep 30/17
	12877	Jun 30/14		12906	Sep 30/17
	12878	Jun 30/14			

SUBJECT.	PAGE	DATE	SUBJECT.	PAGE	DATE
	12907	Sep 30/17		12935	Sep 30/17
	12908	Sep 30/17		12936	Sep 30/17
	12909	Jun 30/14		12937	Sep 30/17
	12910	Jun 30/14		12938	Sep 30/17
	12911	Jun 30/14		12939	Sep 30/17
	12912	Jun 30/14		12940	Sep 30/17
	12913	Jun 30/14		12941	Sep 30/17
	12914	Jun 30/14		12942	Sep 30/17
	12915	Jun 30/14		12943	Sep 30/17
	12916	Jun 30/14		12944	Sep 30/17
	12917	Jun 30/14		12945	Jun 30/14
	12918	Sep 30/17		12946	Jun 30/14
	12919	Sep 30/17		12947	Jun 30/14
	12920	Sep 30/17		12948	Jun 30/14
	12921	Sep 30/17		12949	Jun 30/14
	12922	Sep 30/17		12950	Jun 30/14
	12923	Sep 30/17		12951	Jun 30/14
	12924	Sep 30/17		12952	Jun 30/14
	12925	Jun 30/14		12953	Jun 30/14
	12926	Jun 30/14		12954	Jun 30/14
	12927	Jun 30/14		12955	Jun 30/14
	12928	Jun 30/14		12956	Jun 30/14
	12929	Jun 30/14		12957	Jun 30/14
	12930	Jun 30/14		12958	Jun 30/14
	12931	Jun 30/14		12959	Jun 30/14
	12932	Sep 30/17		12960	Jun 30/14
	12933	Sep 30/17		12961	Jun 30/14
	12934	Sep 30/17		12962	Jun 30/14
				12963	Jun 30/14

SUBJECT.	PAGE	DATE	SUBJECT.	PAGE	DATE
	12964	Jun 30/14		12994	Jun 30/14
	12965	Jun 30/14		12995	Jun 30/14
	12966	Jun 30/14		12996	Jun 30/14
	12967	Jun 30/14		12997	Jun 30/14
	12968	Jun 30/14		12998	Jun 30/14
	12969	Jun 30/14		12999	Jun 30/14
	12970	Jun 30/14		13000	Jun 30/14
	12971	Jun 30/14		13001	Jun 30/14
	12972	Jun 30/14		13002	Jun 30/14
	12973	Jun 30/14		13003	Jun 30/14
	12974	Jun 30/14		13004	Jun 30/14
	12975	Jun 30/14		13005	Jun 30/14
	12976	Jun 30/14		13006	Jun 30/14
	12977	Jun 30/14		13007	Jun 30/14
	12978	Jun 30/14		13008	Jun 30/14
	12979	Jun 30/14		13009	Jun 30/14
	12980	Jun 30/14		13010	Jun 30/14
	12981	Jun 30/14		13011	Jun 30/14
	12982	Jun 30/14		13012	Jun 30/14
	12983	Jun 30/14		13013	Jun 30/14
	12984	Jun 30/14		13014	Jun 30/14
	12985	Jun 30/14		13015	Jun 30/14
	12986	Jun 30/14		13016	Jun 30/14
	12987	Jun 30/14		13017	Jun 30/14
	12988	Jun 30/14		13018	Jun 30/14
	12989	Jun 30/14		13019	Jun 30/14
	12990	Jun 30/14		13020	Jun 30/14
	12991	Jun 30/14		13021	Jun 30/14
	12992	Jun 30/14		13022	Jun 30/14
	12993	Jun 30/14		13023	Jun 30/14

SUBJECT.	PAGE	DATE
	13024	Jun 30/14
	13025	Jun 30/14
	13026	Jun 30/14
	13027	Jun 30/14
	13028	Jun 30/14
	13029	Jun 30/14
	13030	Jun 30/14
	13031	Jun 30/14
	13032	Jun 30/14
	13033	Jun 30/14
	13034	Jun 30/14
	13035	Jun 30/14
	13036	Jun 30/14
	13037	Jun 30/14
	13038	Jun 30/14
	13039	Jun 30/14
	13040	Sep 30/17
	13041	Sep 30/17
	13042	Sep 30/17
	13043	Sep 30/17
	13044	Sep 30/17
	13045	Sep 30/17
	13046	Sep 30/17
	13047	Sep 30/17
	13048	Sep 30/17
	13049	Sep 30/17
	13050	Sep 30/17
	13051	Sep 30/17

SUBJECT.	PAGE	DATE
	13052	Sep 30/17
	13053	Sep 30/17
	13054	Sep 30/17
	13055	Sep 30/17
	13056	Sep 30/17
	13057	Sep 30/17
	13058	Sep 30/17
	13059	Sep 30/17
	13060	Sep 30/17
	13061	Jun 30/14
	13062	Feb 29/16
	13063	Feb 29/16
	13064	Feb 29/16
	13065	Feb 29/16
	13066	Feb 29/16
	13067	Feb 29/16
	13068	Feb 29/16
	13069	Feb 29/16
	13070	Feb 29/16
	13071	Feb 29/16
	13072	Feb 29/16
	13073	Feb 29/16
	13074	Feb 29/16
	13075	Feb 29/16
	13076	Feb 29/16
	13077	Jun 30/14
	13078	Jan 31/16
	13079	Jan 31/16
	13080	Jan 31/16

SUBJECT.	PAGE	DATE	SUBJECT.	PAGE	DATE
	13081	Jan 31/16		13111	Jan 31/16
	13082	Jan 31/16		13112	Jan 31/16
	13083	Jan 31/16		13113	Jan 31/16
	13084	Jan 31/16		13114	Jan 31/16
	13085	Jan 31/16		13115	Jan 31/16
	13086	Jan 31/16		13116	Jan 31/16
	13087	Jan 31/16		13117	Jan 31/16
	13088	Jan 31/16		13118	Jan 31/16
	13089	Jan 31/16		13119	Jan 31/16
	13090	Jan 31/16		13120	Jan 31/16
	13091	Jan 31/16		13121	Jan 31/16
	13092	Jan 31/16		13122	Jan 31/16
	13093	Jan 31/16		13123	Jan 31/16
	13094	Jan 31/16		13124	Jan 31/16
	13095	Jun 30/14		13125	Jun 30/14
	13096	Feb 29/16		13126	Jun 30/14
	13097	Feb 29/16		13127	Jun 30/14
	13098	Feb 29/16		13128	Jun 30/14
	13099	Feb 29/16		13129	Jun 30/14
	13100	Feb 29/16		13130	Feb 29/16
	13101	Feb 29/16		13131	Feb 29/16
	13102	Feb 29/16		13132	Feb 29/16
	13103	Feb 29/16		13133	Feb 29/16
	13104	Feb 29/16		13134	Feb 29/16
	13105	Feb 29/16		13135	Feb 29/16
	13106	Feb 29/16		13136	Feb 29/16
	13107	Feb 29/16		13137	Feb 29/16
	13108	Feb 29/16		13138	Feb 29/16
	13109	Jun 30/14		13139	Feb 29/16
	13110	Jan 31/16		13140	Feb 29/16

SUBJECT.	PAGE	DATE	SUBJECT.	PAGE	DATE
	13141	Feb 29/16		13171	Feb 29/16
	13142	Feb 29/16		13172	Feb 29/16
	13143	Feb 29/16		13173	Feb 29/16
	13144	Feb 29/16		13174	Feb 29/16
	13145	Jun 30/14		13175	Feb 29/16
	13146	Jan 31/16		13176	Feb 29/16
	13147	Jan 31/16		13177	Feb 29/16
	13148	Jan 31/16		13178	Feb 29/16
	13149	Jan 31/16		13179	Feb 29/16
	13150	Jan 31/16		13180	Feb 29/16
	13151	Jan 31/16		13181	Feb 29/16
	13152	Jan 31/16		13182	Feb 29/16
	13153	Jan 31/16		13183	Feb 29/16
	13154	Jan 31/16		13184	Feb 29/16
	13155	Jan 31/16		13185	Jun 30/14
	13156	Jan 31/16		13186	Sep 30/17
	13157	Jan 31/16		13187	Sep 30/17
	13158	Jan 31/16		13188	Sep 30/17
	13159	Jan 31/16		13189	Sep 30/17
	13160	Jan 31/16		13190	Sep 30/17
	13161	Jan 31/16		13191	Sep 30/17
	13162	Jan 31/16		13192	Sep 30/17
	13163	Jan 31/16		13193	Sep 30/17
	13164	Jan 31/16		13194	Sep 30/17
	13165	Jun 30/14		13195	Sep 30/17
	13166	Feb 29/16		13196	Sep 30/17
	13167	Feb 29/16		13197	Sep 30/17
	13168	Feb 29/16		13198	Sep 30/17
	13169	Feb 29/16			
	13170	Feb 29/16			

SUBJECT.	PAGE	DATE	SUBJECT.	PAGE	DATE
	13199	Sep 30/17		13226	Sep 30/17
	13200	Sep 30/17		13227	Sep 30/17
	13201	Sep 30/17		13228	Sep 30/17
	13202	Sep 30/17		13229	Sep 30/17
	13203	Jun 30/14		13230	Sep 30/17
	13204	Sep 30/17		13231	Sep 30/17
	13205	Sep 30/17		13232	Sep 30/17
	13206	Sep 30/17		13233	Sep 30/17
	13207	Sep 30/17		13234	Sep 30/17
	13208	Sep 30/17		13235	Jun 30/14
	13209	Sep 30/17		13236	Feb 29/16
	13210	Sep 30/17		13237	Feb 29/16
	13211	Sep 30/17		13238	Feb 29/16
	13212	Sep 30/17		13239	Feb 29/16
	13213	Sep 30/17		13240	Feb 29/16
	13214	Sep 30/17		13241	Feb 29/16
	13215	Sep 30/17		13242	Feb 29/16
	13216	Sep 30/17		13243	Feb 29/16
	13217	Sep 30/17		13244	Feb 29/16
	13218	Sep 30/17		13245	Feb 29/16
	13219	Sep 30/17		13246	Feb 29/16
	13220	Sep 30/17		13247	Feb 29/16
	13221	Apr 30/15		13248	Feb 29/16
	13222	Sep 30/17		13249	Feb 29/16
	13223	Sep 30/17		13250	Feb 29/16
	13224	Sep 30/17		13251	Feb 29/16
	13225	Sep 30/17		13252	Feb 29/16
				13253	Feb 29/16
				13254	Feb 29/16

SUBJECT.	PAGE	DATE	SUBJECT.	PAGE	DATE
	13255	Jun 30/14		13283	Nov 30/16
	13256	Sep 30/17		13284	Nov 30/16
	13257	Sep 30/17		13285	Nov 30/16
	13258	Sep 30/17		13286	Nov 30/16
	13259	Sep 30/17		13287	Nov 30/16
	13260	Sep 30/17		13288	Nov 30/16
	13261	Sep 30/17		13289	Nov 30/16
	13262	Sep 30/17		13290	Nov 30/16
	13263	Sep 30/17		13291	Nov 30/16
	13264	Sep 30/17		13292	Nov 30/16
	13265	Sep 30/17		13293	Jun 30/14
	13266	Sep 30/17		13294	Jun 30/14
	13267	Sep 30/17		13295	Jun 30/14
	13268	Sep 30/17		13296	Jun 30/14
	13269	Sep 30/17		13297	Jun 30/14
	13270	Sep 30/17		13298	Sep 30/17
	13271	Sep 30/17		13299	Sep 30/17
	13272	Sep 30/17		13300	Sep 30/17
	13273	Sep 30/17		13301	Sep 30/17
	13274	Sep 30/17		13302	Sep 30/17
	13275	Sep 30/17		13303	Sep 30/17
	13276	Sep 30/17		13304	Sep 30/17
	13277	Jun 30/14		13305	Sep 30/17
	13278	Nov 30/16		13306	Sep 30/17
	13279	Nov 30/16		13307	Sep 30/17
	13280	Nov 30/16		13308	Sep 30/17
	13281	Nov 30/16		13309	Sep 30/17
	13282	Nov 30/16		13310	Sep 30/17

SUBJECT.	PAGE	DATE	SUBJECT.	PAGE	DATE
	13311	Sep 30/17		13340	Nov 30/16
	13312	Sep 30/17		13341	Nov 30/16
	13313	Sep 30/17		13342	Nov 30/16
	13314	Sep 30/17		13343	Nov 30/16
	13315	Sep 30/17		13344	Nov 30/16
	13316	Sep 30/17		13345	Jun 30/14
	13317	Sep 30/17		13346	Jul 31/15
	13318	Sep 30/17		13347	Jul 31/15
	13319	Jun 30/14		13348	Jul 31/15
	13320	Jan 31/16		13349	Jul 31/15
	13321	Jan 31/16		13350	Jul 31/15
	13322	Jan 31/16		13351	Jul 31/15
	13323	Jan 31/16		13352	Jul 31/15
	13324	Jan 31/16		13353	Jul 31/15
	13325	Jan 31/16		13354	Jul 31/15
	13326	Jan 31/16		13355	Jun 30/14
	13327	Jan 31/16		13356	Nov 30/14
	13328	Jan 31/16		13357	Nov 30/14
	13329	Jan 31/16		13358	Nov 30/14
	13330	Jan 31/16		13359	Nov 30/14
	13331	Jun 30/14		13360	Nov 30/14
	13332	Nov 30/16		13361	Nov 30/14
	13333	Nov 30/16		13362	Nov 30/14
	13334	Nov 30/16		13363	Nov 30/14
	13335	Nov 30/16		13364	Nov 30/14
	13336	Nov 30/16		13365	Nov 30/14
	13337	Nov 30/16		13366	Nov 30/14
	13338	Nov 30/16		13367	Nov 30/14
	13339	Nov 30/16		13368	Nov 30/14
				13369	Jun 30/14

SUBJECT.	PAGE	DATE	SUBJECT.	PAGE	DATE
	13370	Sep 30/17		13397	Sep 30/17
	13371	Sep 30/17		13398	Sep 30/17
	13372	Sep 30/17		13399	Sep 30/17
	13373	Sep 30/17		13400	Sep 30/17
	13374	Sep 30/17		13401	Sep 30/17
	13375	Sep 30/17		13402	Sep 30/17
	13376	Sep 30/17		13403	Sep 30/17
	13377	Sep 30/17		13404	Sep 30/17
	13378	Sep 30/17		13405	Sep 30/17
	13379	Sep 30/17		13406	Sep 30/17
	13380	Sep 30/17		13407	Sep 30/17
	13381	Sep 30/17		13408	Sep 30/17
	13382	Sep 30/17		13409	Sep 30/17
	13383	Sep 30/17		13410	Sep 30/17
	13384	Sep 30/17		13411	Jun 30/14
	13385	Sep 30/17		13412	Jul 31/15
	13386	Sep 30/17		13413	Jul 31/15
	13387	Sep 30/17		13414	Jul 31/15
	13388	Sep 30/17		13415	Jul 31/15
	13389	Jun 30/14		13416	Jul 31/15
	13390	Sep 30/17		13417	Jul 31/15
	13391	Sep 30/17		13418	Jul 31/15
	13392	Sep 30/17		13419	Jul 31/15
	13393	Sep 30/17		13420	Jul 31/15
	13394	Sep 30/17		13421	Jul 31/15
	13395	Sep 30/17		13422	Jul 31/15
	13396	Sep 30/17		13423	Jul 31/15
				13424	Jul 31/15

SUBJECT.	PAGE	DATE
	13425	Jul 31/15
	13426	Jul 31/15
	13427	Jun 30/14
	13428	Jan 31/16
	13429	Jan 31/16
	13430	Jan 31/16
	13431	Jan 31/16
	13432	Jan 31/16
	13433	Jan 31/16
	13434	Jan 31/16
	13435	Jan 31/16
	13436	Jan 31/16
	13437	Jan 31/16
	13438	Jan 31/16
	13439	Jan 31/16
	13440	Jan 31/16
	13441	Jun 30/14
	13442	Sep 30/17
	13443	Sep 30/17
	13444	Sep 30/17
	13445	Sep 30/17
	13446	Sep 30/17
	13447	Sep 30/17
	13448	Sep 30/17
	13449	Sep 30/17
	13450	Sep 30/17
	13451	Sep 30/17
	13452	Sep 30/17
	13453	Sep 30/17

SUBJECT.	PAGE	DATE
	13454	Sep 30/17
	13455	Sep 30/17
	13456	Sep 30/17
	13457	Sep 30/17
	13458	Sep 30/17
	13459	Sep 30/17
	13460	Sep 30/17
	13461	Sep 30/17
	13462	Sep 30/17
	13463	Jun 30/14
	13464	Jan 31/16
	13465	Jan 31/16
	13466	Jan 31/16
	13467	Jan 31/16
	13468	Jan 31/16
	13469	Jan 31/16
	13470	Jan 31/16
	13471	Jan 31/16
	13472	Jan 31/16
	13473	Jan 31/16
	13474	Jan 31/16
	13475	Jan 31/16
	13476	Jan 31/16
	13477	Jan 31/16
	13478	Jan 31/16
	13479	Jun 30/14
	13480	Jul 31/15
	13481	Jul 31/15
	13482	Jul 31/15

SUBJECT.	PAGE	DATE
	13483	Jul 31/15
	13484	Jul 31/15
	13485	Jul 31/15
	13486	Jul 31/15
	13487	Jul 31/15
	13488	Jul 31/15
	13489	Jul 31/15
	13490	Jul 31/15
	13491	Jul 31/15
	13492	Jul 31/15
	13493	Jul 31/15
	13494	Jul 31/15
	13495	Jun 30/14
	13496	Apr 30/16
	13497	Apr 30/16
	13498	Apr 30/16
	13499	Apr 30/16
	13500	Apr 30/16
	13501	Apr 30/16
	13502	Apr 30/16
	13503	Apr 30/16
	13504	Apr 30/16
	13505	Apr 30/16
	13506	Apr 30/16
	13507	Apr 30/16
	13508	Apr 30/16
	13509	Apr 30/16
	13510	Apr 30/16

SUBJECT.	PAGE	DATE
	13511	Jun 30/14
	13512	Nov 30/14
	13513	Nov 30/14
	13514	Nov 30/14
	13515	Nov 30/14
	13516	Nov 30/14
	13517	Nov 30/14
	13518	Nov 30/14
	13519	Nov 30/14
	13520	Nov 30/14
	13521	Nov 30/14
	13522	Nov 30/14
	13523	Nov 30/14
	13524	Nov 30/14
	13525	Nov 30/14
	13526	Nov 30/14
	13527	Jun 30/14
	13528	Sep 30/17
	13529	Sep 30/17
	13530	Sep 30/17
	13531	Sep 30/17
	13532	Sep 30/17
	13533	Sep 30/17
	13534	Sep 30/17
	13535	Sep 30/17
	13536	Sep 30/17
	13537	Sep 30/17
	13538	Sep 30/17
	13539	Sep 30/17

SUBJECT.	PAGE	DATE	SUBJECT.	PAGE	DATE
	13540	Sep 30/17		13567	Apr 30/16
	13541	Sep 30/17		13568	Apr 30/16
	13542	Sep 30/17		13569	Apr 30/16
	13543	Sep 30/17		13570	Apr 30/16
	13544	Sep 30/17		13571	Apr 30/16
	13545	Sep 30/17		13572	Apr 30/16
	13546	Sep 30/17		13573	Apr 30/16
	13547	Jun 30/14		13574	Apr 30/16
	13548	Apr 30/15		13575	Apr 30/16
	13549	Apr 30/15		13576	Apr 30/16
	13550	Apr 30/15		13577	Apr 30/16
	13551	Apr 30/15		13578	Apr 30/16
	13552	Apr 30/15		13579	Apr 30/16
	13553	Apr 30/15		13580	Apr 30/16
	13554	Apr 30/15		13581	Jun 30/14
	13555	Apr 30/15		13582	Feb 29/16
	13556	Apr 30/15		13583	Feb 29/16
	13557	Apr 30/15		13584	Feb 29/16
	13558	Apr 30/15		13585	Feb 29/16
	13559	Apr 30/15		13586	Feb 29/16
	13560	Apr 30/15		13587	Feb 29/16
	13561	Jun 30/14		13588	Feb 29/16
	13562	Apr 30/16		13589	Feb 29/16
	13563	Apr 30/16		13590	Feb 29/16
	13564	Apr 30/16		13591	Feb 29/16
	13565	Apr 30/16		13592	Feb 29/16
	13566	Apr 30/16		13593	Feb 29/16
				13594	Feb 29/16

SUBJECT.	PAGE	DATE
	13595	Feb 29/16
	13596	Feb 29/16
	13597	Jun 30/14
	13598	Sep 30/17
	13599	Sep 30/17
	13600	Sep 30/17
	13601	Sep 30/17
	13602	Sep 30/17
	13603	Sep 30/17
	13604	Sep 30/17
	13605	Sep 30/17
	13606	Sep 30/17
	13607	Sep 30/17
	13608	Sep 30/17
	13609	Sep 30/17
	13610	Sep 30/17
	13611	Sep 30/17
	13612	Sep 30/17
	13613	Sep 30/17
	13614	Sep 30/17
	13615	Jun 30/14
	13616	Feb 29/16
	13617	Feb 29/16
	13618	Feb 29/16
	13619	Feb 29/16
	13620	Feb 29/16
	13621	Feb 29/16
	13622	Feb 29/16

SUBJECT.	PAGE	DATE
	13623	Feb 29/16
	13624	Feb 29/16
	13625	Feb 29/16
	13626	Feb 29/16
	13627	Feb 29/16
	13628	Feb 29/16
	13629	Feb 29/16
	13630	Feb 29/16
	13631	Feb 29/16
	13632	Feb 29/16
	13633	Jun 30/14
	13634	Jul 31/16
	13635	Jul 31/16
	13636	Jul 31/16
	13637	Jul 31/16
	13638	Jul 31/16
	13639	Jul 31/16
	13640	Jul 31/16
	13641	Jul 31/16
	13642	Jul 31/16
	13643	Jul 31/16
	13644	Jul 31/16
	13645	Jul 31/16
	13646	Jul 31/16
	13647	Jul 31/16
	13648	Jul 31/16
	13649	Jul 31/16
	13650	Jul 31/16
	13651	Jun 30/14
	13652	Nov 30/16

SUBJECT.	PAGE	DATE
	13653	Nov 30/16
	13654	Nov 30/16
	13655	Nov 30/16
	13656	Nov 30/16
	13657	Nov 30/16
	13658	Nov 30/16
	13659	Nov 30/16
	13660	Nov 30/16
	13661	Nov 30/16
	13662	Nov 30/16
	13663	Nov 30/16
	13664	Nov 30/16
	13665	Nov 30/16
	13666	Nov 30/16
	13667	Jun 30/14
	13668	Feb 29/16
	13669	Feb 29/16
	13670	Feb 29/16
	13671	Feb 29/16
	13672	Feb 29/16
	13673	Feb 29/16
	13674	Feb 29/16
	13675	Feb 29/16
	13676	Feb 29/16
	13677	Feb 29/16
	13678	Feb 29/16
	13679	Feb 29/16
	13680	Feb 29/16
	13681	Feb 29/16
	13682	Feb 29/16

SUBJECT.	PAGE	DATE
	13683	Feb 29/16
	13684	Feb 29/16
	13685	Feb 29/16
	13686	Feb 29/16
	13687	Jun 30/14
	13688	Sep 30/17
	13689	Sep 30/17
	13690	Sep 30/17
	13691	Sep 30/17
	13692	Sep 30/17
	13693	Sep 30/17
	13694	Sep 30/17
	13695	Sep 30/17
	13696	Sep 30/17
	13697	Sep 30/17
	13698	Sep 30/17
	13699	Sep 30/17
	13700	Sep 30/17
	13701	Jun 30/14
	13702	Feb 29/16
	13703	Feb 29/16
	13704	Feb 29/16
	13705	Feb 29/16
	13706	Feb 29/16
	13707	Feb 29/16
	13708	Feb 29/16
	13709	Feb 29/16
	13710	Feb 29/16

SUBJECT.	PAGE	DATE	SUBJECT.	PAGE	DATE
	13711	Feb 29/16		13741	Jul 31/15
	13712	Feb 29/16		13742	Jul 31/15
	13713	Feb 29/16		13743	Jul 31/15
	13714	Feb 29/16		13744	Jul 31/15
	13715	Feb 29/16		13745	Jul 31/15
	13716	Feb 29/16		13746	Jul 31/15
	13717	Jun 30/14		13747	Jul 31/15
	13718	Feb 29/16		13748	Jul 31/15
	13719	Feb 29/16		13749	Jul 31/15
	13720	Feb 29/16		13750	Jul 31/15
	13721	Feb 29/16		13751	Jul 31/15
	13722	Feb 29/16		13752	Jul 31/15
	13723	Feb 29/16		13753	Jun 30/14
	13724	Feb 29/16		13754	Apr 30/16
	13725	Feb 29/16		13755	Apr 30/16
	13726	Feb 29/16		13756	Apr 30/16
	13727	Feb 29/16		13757	Apr 30/16
	13728	Feb 29/16		13758	Apr 30/16
	13729	Feb 29/16		13759	Apr 30/16
	13730	Feb 29/16		13760	Apr 30/16
	13731	Feb 29/16		13761	Apr 30/16
	13732	Feb 29/16		13762	Apr 30/16
	13733	Feb 29/16		13763	Apr 30/16
	13734	Feb 29/16		13764	Apr 30/16
	13735	Jun 30/14		13765	Apr 30/16
	13736	Jul 31/15		13766	Apr 30/16
	13737	Jul 31/15		13767	Apr 30/16
	13738	Jul 31/15		13768	Apr 30/16
	13739	Jul 31/15			
	13740	Jul 31/15			

SUBJECT.	PAGE	DATE	SUBJECT.	PAGE	DATE
	13769	Apr 30/16		13797	Sep 30/17
	13770	Apr 30/16		13798	Sep 30/17
	13771	Apr 30/16		13799	Sep 30/17
	13772	Apr 30/16		13800	Sep 30/17
	13773	Jun 30/14		13801	Jun 30/14
	13774	Feb 29/16		13802	Jul 31/15
	13775	Feb 29/16		13803	Jul 31/15
	13776	Feb 29/16		13804	Jul 31/15
	13777	Feb 29/16		13805	Jul 31/15
	13778	Feb 29/16		13806	Jul 31/15
	13779	Feb 29/16		13807	Jul 31/15
	13780	Feb 29/16		13808	Jul 31/15
	13781	Feb 29/16		13809	Jul 31/15
	13782	Feb 29/16		13810	Jul 31/15
	13783	Feb 29/16		13811	Jul 31/15
	13784	Feb 29/16		13812	Jul 31/15
	13785	Feb 29/16		13813	Jul 31/15
	13786	Feb 29/16		13814	Jul 31/15
	13787	Jun 30/14		13815	Jul 31/15
	13788	Sep 30/17		13816	Jul 31/15
	13789	Sep 30/17		13817	Jun 30/14
	13790	Sep 30/17		13818	Apr 30/16
	13791	Sep 30/17		13819	Apr 30/16
	13792	Sep 30/17		13820	Apr 30/16
	13793	Sep 30/17		13821	Apr 30/16
	13794	Sep 30/17		13822	Apr 30/16
	13795	Sep 30/17		13823	Apr 30/16
	13796	Sep 30/17		13824	Apr 30/16
				13825	Apr 30/16

SUBJECT.	PAGE	DATE	SUBJECT.	PAGE	DATE
	13826	Apr 30/16		13854	Sep 30/17
	13827	Apr 30/16		13855	Sep 30/17
	13828	Apr 30/16		13856	Sep 30/17
	13829	Jun 30/14		13857	Sep 30/17
	13830	Feb 29/16		13858	Sep 30/17
	13831	Feb 29/16		13859	Jun 30/14
	13832	Feb 29/16		13860	Jan 31/16
	13833	Feb 29/16		13861	Jan 31/16
	13834	Feb 29/16		13862	Jan 31/16
	13835	Feb 29/16		13863	Jan 31/16
	13836	Feb 29/16		13864	Jan 31/16
	13837	Feb 29/16		13865	Jan 31/16
	13838	Feb 29/16		13866	Jan 31/16
	13839	Feb 29/16		13867	Jan 31/16
	13840	Feb 29/16		13868	Jan 31/16
	13841	Jun 30/14		13869	Jan 31/16
	13842	Sep 30/17		13870	Jan 31/16
	13843	Sep 30/17		13871	Jan 31/16
	13844	Sep 30/17		13872	Jan 31/16
	13845	Sep 30/17		13873	Jun 30/14
	13846	Sep 30/17		13874	Feb 29/16
	13847	Sep 30/17		13875	Feb 29/16
	13848	Sep 30/17		13876	Feb 29/16
	13849	Sep 30/17		13877	Feb 29/16
	13850	Sep 30/17		13878	Feb 29/16
	13851	Sep 30/17		13879	Feb 29/16
	13852	Sep 30/17		13880	Feb 29/16
	13853	Sep 30/17		13881	Jun 30/14
				13882	Feb 29/16

SUBJECT.	PAGE	DATE	SUBJECT.	PAGE	DATE
	13883	Feb 29/16		13913	Feb 29/16
	13884	Feb 29/16		13914	Feb 29/16
	13885	Feb 29/16		13915	Feb 29/16
	13886	Feb 29/16		13916	Feb 29/16
	13887	Feb 29/16		13917	Feb 29/16
	13888	Feb 29/16		13918	Feb 29/16
	13889	Feb 29/16		13919	Jul 31/16
	13890	Feb 29/16		13920	Jul 31/16
	13891	Feb 29/16		13921	Jul 31/16
	13892	Feb 29/16		13922	Jul 31/16
	13893	Feb 29/16		13923	Jul 31/16
	13894	Feb 29/16		13924	Jul 31/16
	13895	Jun 30/14		13925	Jul 31/16
	13896	Feb 29/16		13926	Jul 31/16
	13897	Feb 29/16		13927	Jul 31/16
	13898	Feb 29/16		13928	Jul 31/16
	13899	Feb 29/16		13929	Jul 31/16
	13900	Feb 29/16		13930	Jul 31/16
	13901	Feb 29/16		13931	Jun 30/14
	13902	Feb 29/16		13932	Jan 31/16
	13903	Feb 29/16		13933	Jan 31/16
	13904	Feb 29/16		13934	Jan 31/16
	13905	Feb 29/16		13935	Jan 31/16
	13906	Feb 29/16		13936	Jan 31/16
	13907	Jun 30/14		13937	Jan 31/16
	13908	Feb 29/16		13938	Jan 31/16
	13909	Feb 29/16		13939	Jan 31/16
	13910	Feb 29/16		13940	Jan 31/16
	13911	Feb 29/16		13941	Jan 31/16
	13912	Feb 29/16		13942	Jan 31/16

SUBJECT.	PAGE	DATE
	13943	Jun 30/14
	13944	Jan 31/16
	13945	Jan 31/16
	13946	Jan 31/16
	13947	Jan 31/16
	13948	Jan 31/16
	13949	Jan 31/16
	13950	Jan 31/16
	13951	Jan 31/16
	13952	Jan 31/16
	13953	Jan 31/16
	13954	Jan 31/16
	13955	Jun 30/14
	13956	Jun 30/14
	13957	Jun 30/14
	13958	Jun 30/14
	13959	Jun 30/14
	13960	Jun 30/14
	13961	Jun 30/14
	13962	Jun 30/14
	13963	Jun 30/14
	13964	Jun 30/14
	13965	Jun 30/14
	13966	Jun 30/14
	13967	Jun 30/14
	13968	Jun 30/14
	13969	Jun 30/14
	13970	Jun 30/14
	13971	Jun 30/14
	13972	Jun 30/14

SUBJECT.	PAGE	DATE
	13973	Jun 30/14
	13974	Jun 30/14
	13975	Jun 30/14
	13976	Jun 30/14
	13977	Jun 30/14
	13978	Sep 30/17
	13979	Sep 30/17
	13980	Sep 30/17
	13981	Sep 30/17
	13982	Sep 30/17
	13983	Sep 30/17
	13984	Sep 30/17
	13985	Jun 30/14
	13986	Jun 30/15
	13987	Jun 30/15
	13988	Jun 30/15
	13989	Jun 30/15
	13990	Jun 30/15
	13991	Jun 30/15
	13992	Jun 30/15
	13993	Jun 30/15
	13994	Jun 30/15

LIST OF ILLUSTRATIONS

FIGURE	TITLE	PAGE
INTRODUCTION		
DESCRIPTION AND OPERATION		
1	Lavatory A	9
2	Lavatory A	10
TESTING AND FAULT ISOLATION		
SCHEMATIC AND WIRING DIAGRAMS		
2001	Wiring and Electrical Equipment	2002
2002	Wiring and Electrical Equipment	2003
2003	Wiring Diagram Lavatory PN D2549105 Sheet 1 of 3	2005
2004	Wiring Diagram Lavatory PN D2549105 Sheet 2 of 3	2007
2005	Wiring Diagram Lavatory PN D2549105 Sheet 3 of 3	2009
2006	Wiring and Electrical Equipment	2013
2007	Wiring and Electrical Equipment	2014
2008	Wiring Diagram Lavatory PN D25490205 Sheet 1 of 3	2015
2009	Wiring Diagram Lavatory PN D25490205 Sheet 2 of 3	2017
2010	Wiring Diagram Lavatory PN D25490205 Sheet 3 of 3	2019
2011	Wiring Diagram	2029
2012	Wiring Diagram	2033
2013	Wiring Diagram Sheet 1 of 2	2037
2014	Wiring Diagram Sheet 1 of 2	2039
2015	Wiring Diagram	2043
2016	Wiring Diagram	2047

FIGURE	TITLE	PAGE
2017	Wiring Diagram	2051
2018	Wiring Diagram Sheet 1 of 2	2055
2019	Wiring Diagram Sheet 2 of 2	2057
2020	Wiring Diagram Sheet 1 of 2	2061
2021	Wiring Diagram Sheet 2 of 2	2063
2022	Wiring Diagram	2067
2023	Wiring Diagram	2071
2024	Wiring Diagram	2075
2025	Wiring Diagram	2079
2026	Wiring Diagram	2083
2027	Wiring Diagram	2087
2028	Wiring Diagram Sheet 1 of 2	2091
2029	Wiring Diagram Sheet 2 of 2	2093
2030	Wiring Diagram	2097
2031	Wiring Diagram Sheet 1 of 2	2101
2032	Wiring Diagram Sheet 2 of 2	2103
2033	Wiring Diagram Sheet 1 of 2	2107
2034	Wiring Diagram Sheet 2 of 2	2109
2035	Wiring Diagram	2113
2036	Wiring Diagram	2117
2037	Wiring Diagram Sheet 1 of 2	2121
2038	Wiring Diagram Sheet 2 of 2	2123

DISASSEMBLY

FIGURE TITLE PAGE

CLEANING

INSPECTION/CHECK

REPAIR

6001 Repair of the Cracks or Damages in the Floor Bottom 6024

6002 Repair of the Cracks or Damages in the Vertical Panel 6025

6003 Installation of the Preventive Pads 6026

6004 Broken Floor Pan 6027

6005 Sealant around the NTF-covering 6028

6006 Damaged Floor Pan Inserts 6029

6007 Damaged Area 6030

6008 Floor Pan Surrounding Inserts 6031

6009 Repair of the Shroudfixation 6032

6010 Repair of the Plastic Washbasin 6042

6011 Repair of the Toilet Shroud Assembly 6050

6012 Repair of the Toilet Shroud Assembly 6051

6013 Repair of the Lower Attachments of the Aluminium Lavatory Walls 6060

6014 Repair of the Damaged Brackets Without Core Damages 6061

6015 Repair of the Damaged Brackets Without Core Damages 6062

6016 Repair of the Corroded Honeycomb Core and of the Damaged Brackets 6063

6017 Repair of the Corroded Honeycomb Core and of the Damaged Brackets 6064

6018 Repair of the Damaged Brackets Without Core Damages 6065

6019 Repair of the Damaged Brackets Without Core Damages 6066

FIGURE	TITLE	PAGE
6020	Repair of the Corroded Honeycomb Core and of the Damaged Brackets	6067
6021	Repair of the Corroded Honeycomb Core and of the Damaged Brackets	6068
6022	Repair of the Corroded Honeycomb Core and of the Damaged Brackets	6069
6023	Repair of the Aluminium Wall with Composite Material	6074
6024	Repair of the Aluminium Wall with Composite Material	6075
6025	Repair of the Aluminium Wall with Composite Material	6076
6026	Repair of the Aluminium Wall with Composite Material	6077
6027	Repair of the Aluminium Wall with Composite Material	6078
6028	Repair of the Aluminium Wall with Composite Material	6079
6029	Repair of the Aluminium Wall with Composite Material	6080
6030	Repair of the Aluminium Wall with Composite Material	6081
6031	Repair of the Washstand Cover.	6086
6032	Repair of the Washstand Cover.	6087
6033	Repair of the Waste Flap Area of the Plastic Washbasin.	6095
6034	Repair of the Waste Flap Area of the Plastic Washbasin.	6096
6035	Repair of the Waste Flap Area of the Plastic Washbasin.	6097
6036	Repair of the Waste Flap Area of the Plastic Washbasin.	6098
ASSEMBLY		
STORAGE (INCLUDING TRANSPORTATION)		
ILLUSTRATED PARTS LIST		
1	LAVATORY A ASSY	10659
01A	LAVATORY A ASSY	10673

FIGURE	TITLE	PAGE
01B	LAVATORY A ASSY	10691
01C	LAVATORY A ASSY	10707
01D	LAVATORY A ASSY	10723
01E	LAVATORY A ASSY	10737
01F	LAVATORY A ASSY	10753
01G	LAVATORY A ASSY	10769
01H	LAVATORY A ASSY	10787
01J	LAVATORY A ASSY	10805
01K	LAVATORY A ASSY	10823
01L	LAVATORY A ASSY	10841
01M	LAVATORY A ASSY	10859
01N	LAVATORY A ASSY	10875
01P	LAVATORY A ASSY	10891
01Q	LAVATORY A ASSY	10907
01R	LAVATORY A ASSY	10925
01S	LAVATORY A ASSY	10931
01T	LAVATORY A ASSY	10945
01U	LAVATORY A ASSY	10961
01V	LAVATORY A ASSY	10977
01W	LAVATORY A ASSY	10993
01X	LAVATORY A ASSY	11011
01Y	LAVATORY A ASSY	11029
01Z	LAVATORY A ASSY	11047
2	ATTACHMENT-LAVATORY	11061
02A	ATTACHMENT-LAVATORY	11073

FIGURE	TITLE	PAGE
02B	ATTACHMENT-LAVATORY	11087
02C	ATTACHMENT-LAVATORY	11097
02D	ATTACHMENT-LAVATORY	11111
4	PANEL-CEILING	11127
04A	PANEL-CEILING	11141
5	WALL-REAR	11147
05A	WALL-REAR	11155
05B	WALL-REAR	11167
05C	WALL-REAR	11179
05D	WALL-REAR	11187
05E	WALL-REAR	11193
05F	WALL-REAR	11197
05G	WALL-REAR	11207
05H	WALL-REAR	11215
05J	WALL-REAR	11223
6	WALL-SIDE	11227
06A	WALL-SIDE	11241
06B	WALL-SIDE	11253
06C	WALL-SIDE	11265
06D	WALL-SIDE	11277
06E	WALL-SIDE	11287
06F	WALL-SIDE	11299
06G	WALL-SIDE	11311
06H	WALL-SIDE	11323
06J	WALL-SIDE	11335

FIGURE	TITLE	PAGE
06K	WALL-SIDE	11349
06L	WALL-SIDE	11363
06M	WALL-SIDE	11375
06N	WALL-SIDE	11389
06P	WALL-SIDE	11403
06Q	WALL-SIDE	11419
06R	WALL-SIDE	11431
06S	WALL-SIDE	11439
06T	WALL-SIDE	11443
06U	WALL-SIDE	11455
06V	WALL-SIDE	11469
06W	WALL-SIDE	11481
06X	WALL-SIDE	11493
06Y	WALL-SIDE	11507
06Z	WALL-SIDE	11521
7	HOUSING	11537
07A	HOUSING	11545
07B	HOUSING	11555
07C	HOUSING	11565
07D	HOUSING	11573
07E	HOUSING	11583
07F	HOUSING	11593
07G	HOUSING	11601
07H	HOUSING	11609
07J	HOUSING	11613

FIGURE	TITLE	PAGE
07K	HOUSING	11621
07L	HOUSING	11629
07M	HOUSING	11637
07N	HOUSING	11641
07P	HOUSING	11649
07Q	HOUSING	11653
07R	HOUSING	11661
07S	HOUSING	11671
07T	HOUSING	11681
07U	HOUSING	11691
07V	HOUSING	11699
07W	HOUSING	11707
07X	HOUSING	11717
07Y	HOUSING	11727
07Z	HOUSING	11739
9	DOOR-WASTE,EXTERNAL	11747
10	DOOR INSTL	11751
10A	DOOR INSTL	11757
11	DOOR ASSY-SINGLE	11763
11A	DOOR ASSY-SINGLE	11771
11B	DOOR ASSY-SINGLE	11777
11C	DOOR ASSY-SINGLE	11785
11D	DOOR ASSY-SINGLE	11791
11E	DOOR ASSY-SINGLE	11799
11F	DOOR ASSY-SINGLE	11811

FIGURE	TITLE	PAGE
11G	DOOR ASSY-SINGLE	11823
11H	DOOR ASSY-SINGLE	11833
11J	DOOR ASSY-SINGLE	11843
11K	DOOR ASSY-SINGLE	11851
11L	DOOR ASSY-SINGLE	11859
11M	DOOR ASSY-SINGLE	11863
11N	DOOR ASSY-SINGLE	11871
11P	DOOR ASSY-SINGLE	11879
11Q	DOOR ASSY-SINGLE	11885
11R	DOOR ASSY-SINGLE	11891
12	TOILET UNIT AND TOILET SHROUD	11895
12A	TOILET UNIT AND TOILET SHROUD	11905
12B	TOILET UNIT AND TOILET SHROUD	11915
12C	TOILET UNIT AND TOILET SHROUD	11921
12D	TOILET UNIT AND TOILET SHROUD	11937
12E	TOILET UNIT AND TOILET SHROUD	11951
12F	TOILET UNIT AND TOILET SHROUD	11963
12G	TOILET UNIT AND TOILET SHROUD	11967
12H	TOILET UNIT AND TOILET SHROUD	11983
12J	TOILET UNIT AND TOILET SHROUD	11991
13	PAN-FLOOR	11995
13A	PAN-FLOOR	12007
13B	PAN-FLOOR	12013
13C	PAN-FLOOR	12023
13D	PAN-FLOOR	12035

FIGURE	TITLE	PAGE
13E	PAN-FLOOR	12045
13F	PAN-FLOOR	12053
13G	PAN-FLOOR	12057
13H	PAN-FLOOR	12063
13J	PAN-FLOOR	12073
13K	PAN-FLOOR	12083
13L	PAN-FLOOR	12091
13M	PAN-FLOOR	12099
13N	PAN-FLOOR	12103
13P	PAN-FLOOR	12113
13Q	PAN-FLOOR	12123
13R	PAN-FLOOR	12131
13S	PAN-FLOOR	12135
13T	PAN-FLOOR	12143
13U	PAN-FLOOR	12149
13V	PAN-FLOOR	12155
13W	PAN-FLOOR	12163
14	LIGHT-DOOR	12167
14A	LIGHT-DOOR	12179
14B	LIGHT-DOOR	12189
14C	LIGHT-DOOR	12193
15	WASHBASIN UNIT	12197
15A	WASHBASIN UNIT	12207
15B	WASHBASIN UNIT	12211
15C	WASHBASIN UNIT	12215

FIGURE	TITLE	PAGE
15D	WASHBASIN UNIT	12227
15E	WASHBASIN UNIT	12233
15F	WASHBASIN UNIT	12239
15G	WASHBASIN UNIT	12251
15H	WASHBASIN UNIT	12267
15J	WASHBASIN UNIT	12277
15K	WASHBASIN UNIT	12281
15L	WASHBASIN UNIT	12289
15M	WASHBASIN UNIT	12303
15N	WASHBASIN UNIT	12311
15P	WASHBASIN UNIT	12315
15Q	WASHBASIN UNIT	12319
15R	WASHBASIN UNIT	12329
15S	WASHBASIN UNIT	12335
15T	WASHBASIN UNIT	12341
15U	WASHBASIN UNIT	12347
16	DOOR ASSY-WASHBASIN UNIT	12353
16A	DOOR ASSY-WASHBASIN UNIT	12363
16B	DOOR ASSY-WASHBASIN UNIT	12369
16C	DOOR ASSY-WASHBASIN UNIT	12387
16D	DOOR ASSY-WASHBASIN UNIT	12399
16E	DOOR ASSY-WASHBASIN UNIT	12403
16F	DOOR ASSY-WASHBASIN UNIT	12409
17	PANEL ASSY-WASHBASIN UNIT	12413
17A	PANEL ASSY-WASHBASIN UNIT	12417

FIGURE	TITLE	PAGE
17B	PANEL ASSY-WASHBASIN UNIT	12431
17C	PANEL ASSY-WASHBASIN UNIT	12439
17D	PANEL ASSY-WASHBASIN UNIT	12457
17E	PANEL ASSY-WASHBASIN UNIT	12467
17F	PANEL ASSY-WASHBASIN UNIT	12471
17G	PANEL ASSY-WASHBASIN UNIT	12475
18	BIN-WASTE,CHUTE-WASTE AND EXTINGUISHER-FIRE	12479
19	CABINET-SERVICE	12497
19A	CABINET-SERVICE	12505
19B	CABINET-SERVICE	12515
19C	CABINET-SERVICE	12529
19D	CABINET-SERVICE	12537
19E	CABINET-SERVICE	12545
19F	CABINET-SERVICE	12579
19G	CABINET-SERVICE	12597
19H	CABINET-SERVICE	12599
19J	CABINET-SERVICE	12609
19K	CABINET-SERVICE	12615
20	TABLE-NURSING	12621
20A	TABLE-NURSING	12627
20B	TABLE-NURSING	12645
20C	TABLE-NURSING	12651
21	VENTILATION SYSTEM	12655
21A	VENTILATION SYSTEM	12665
21B	VENTILATION SYSTEM	12675

FIGURE	TITLE	PAGE
22	WATER SYSTEM-POTABLE	12685
22A	WATER SYSTEM-POTABLE	12697
22B	WATER SYSTEM-POTABLE	12703
22C	WATER SYSTEM-POTABLE	12707
22D	WATER SYSTEM-POTABLE	12711
22E	WATER SYSTEM-POTABLE	12727
22F	WATER SYSTEM-POTABLE	12733
22G	WATER SYSTEM-POTABLE	12739
22H	WATER SYSTEM-POTABLE	12747
22J	WATER SYSTEM-POTABLE	12753
22K	WATER SYSTEM-POTABLE	12757
23	WATER SYSTEM-WASTE	12765
23A	WATER SYSTEM-WASTE	12775
23B	WATER SYSTEM-WASTE	12779
23C	WATER SYSTEM-WASTE	12797
23D	WATER SYSTEM-WASTE	12801
26	ELECTRICAL SYSTEM	12807
26A	ELECTRICAL SYSTEM	12821
26B	ELECTRICAL SYSTEM	12831
26C	ELECTRICAL SYSTEM	12839
26D	ELECTRICAL SYSTEM	12851
26E	ELECTRICAL SYSTEM	12857
26F	ELECTRICAL SYSTEM	12867
26G	ELECTRICAL SYSTEM	12873
26H	ELECTRICAL SYSTEM	12879

FIGURE	TITLE	PAGE
26J	ELECTRICAL SYSTEM	12883
26K	ELECTRICAL SYSTEM	12889
26L	ELECTRICAL SYSTEM	12897
26M	ELECTRICAL SYSTEM	12901
26N	ELECTRICAL SYSTEM	12909
26P	ELECTRICAL SYSTEM	12917
26Q	ELECTRICAL SYSTEM	12925
26R	ELECTRICAL SYSTEM	12931
26S	ELECTRICAL SYSTEM	12945
26T	ELECTRICAL SYSTEM	12949
26U	ELECTRICAL SYSTEM	12955
26V	ELECTRICAL SYSTEM	12963
27	HARNESS-CABLE	12971
27A	HARNESS ASSY-CABLE	12983
27B	HARNESS ASSY-CABLE	12989
27C	HARNESS ASSY-CABLE	12995
27D	HARNESS ASSY-CABLE	13003
27E	HARNESS ASSY-CABLE	13011
31	ELECTRICAL SYSTEM-COCKPIT DOOR LOCKING	13019
31A	ELECTRICAL SYSTEM-COCKPIT DOOR LOCKING	13023
31B	ELECTRICAL SYSTEM-COCKPIT DOOR LOCKING	13027
31C	ELECTRICAL SYSTEM-COCKPIT DOOR LOCKING	13031
41	LAVATORY A ASSY	13039
41A	LAVATORY A ASSY	13061
41B	LAVATORY A ASSY	13077

FIGURE	TITLE	PAGE
41C	LAVATORY A ASSY	13095
41D	LAVATORY A ASSY	13109
41E	LAVATORY A ASSY	13125
41F	LAVATORY A ASSY	13129
41G	LAVATORY A ASSY	13145
41H	LAVATORY A ASSY	13165
41J	LAVATORY A ASSY	13185
41K	LAVATORY A ASSY	13203
41L	LAVATORY A ASSY	13221
41M	LAVATORY A ASSY	13235
41N	LAVATORY A ASSY	13255
41P	LAVATORY A ASSY	13277
41Q	LAVATORY A ASSY	13293
41R	LAVATORY A ASSY	13297
41S	LAVATORY A ASSY	13319
41T	LAVATORY A ASSY	13331
41U	LAVATORY A ASSY	13345
41V	LAVATORY A ASSY	13355
41W	LAVATORY A ASSY	13369
41X	LAVATORY A ASSY	13389
41Y	LAVATORY A ASSY	13411
41Z	LAVATORY A ASSY	13427
42	LAVATORY A ASSY	13441
42A	LAVATORY A ASSY	13463
42B	LAVATORY A ASSY	13479

FIGURE	TITLE	PAGE
42C	LAVATORY A ASSY	13495
42D	LAVATORY A ASSY	13511
42E	LAVATORY A ASSY	13527
42F	LAVATORY A ASSY	13547
42G	LAVATORY A ASSY	13561
42H	LAVATORY A ASSY	13581
42J	LAVATORY A ASSY	13597
42K	LAVATORY A ASSY	13615
42L	LAVATORY A ASSY	13633
42M	LAVATORY A ASSY	13651
42N	LAVATORY A ASSY	13667
42P	LAVATORY A ASSY	13687
42Q	LAVATORY A ASSY	13701
42R	LAVATORY A ASSY	13717
42S	LAVATORY A ASSY	13735
42T	LAVATORY A ASSY	13753
42U	LAVATORY A ASSY	13773
48	WALL-SIDE	13787
48A	WALL-SIDE	13801
48B	WALL-SIDE	13817
48C	WALL-SIDE	13829
48D	WALL-SIDE	13841
48E	WALL-SIDE	13859
48F	WALL-SIDE	13873
48G	WALL-SIDE	13881

FIGURE	TITLE	PAGE
48H	WALL-SIDE	13895
48J	WALL-SIDE	13907
48K	WALL-SIDE	13919
48L	WALL-SIDE	13931
48M	WALL-SIDE	13943
48N	WALL-SIDE	13955
49	HOUSING	13961
49A	WALL-SIDE	13969
49B	HOUSING	13977
49C	HOUSING	13985

THIS PAGE IS INTENTIONALLY LEFT BLANK

LIST OF TABLES

TABLE	TITLE	PAGE
INTRODUCTION		
DESCRIPTION AND OPERATION		
1	Subcomponents Table	2
2	Dimension Table	5
3	Weight Table	5
TESTING AND FAULT ISOLATION		
SCHEMATIC AND WIRING DIAGRAMS		
DISASSEMBLY		
3001	Reference list for the replacement of permanent installed parts	3039
3002	Reference list for the replacement of permanent installed parts	3040
3003	Reference list for the replacement of permanent installed parts	3041
3004	Reference list for the replacement of permanent installed parts	3042
3005	Reference list for the replacement of permanent installed parts	3043
3006	Reference list for the replacement of permanent installed parts	3044
3007	Consumable Materials	3046
3008	Reference list for the replacement of permanent installed parts	3048
3009	Reference list for the replacement of permanent installed parts	3049

TABLE	TITLE	PAGE
3010	Reference list for the replacement of permanent installed parts	3050
3011	Reference list for the replacement of permanent installed parts	3052
3012	Reference list for the replacement of permanent installed parts	3053
3013	Reference list for the replacement of permanent installed parts	3055
3014	Reference list for the replacement of permanent installed parts	3056
3015	Reference list for the replacement of permanent installed parts	3058
3016	Reference list for the replacement of permanent installed parts	3063
3017	Reference list for the replacement of permanent installed parts	3064
3018	Reference list for the replacement of permanent installed parts	3066
3019	Reference list for the replacement of permanent installed parts	3070
3020	Reference list for the replacement of permanent installed parts	3071
3021	Consumable Materials	3073
3022	Reference list for the replacement of permanent installed parts	3074
3023	Reference list for the replacement of permanent installed parts	3075
3024	Consumable Materials	3081
3025	Reference list for the replacement of permanent installed parts	3083

TABLE	TITLE	PAGE
3026	Reference list for the replacement of permanent installed parts	3088
3027	Reference list for the replacement of permanent installed parts	3089
3028	Reference list for the replacement of permanent installed parts	3093
3029	Reference list for the replacement of permanent installed parts	3096
3030	Consumable Materials	3100
3031	Fixtures, Tools, Test and Support Equipment	3100
3032	Reference list for the replacement of permanent installed parts	3101
3033	Reference list for the replacement of permanent installed parts	3103
3034	Reference list for the replacement of permanent installed parts	3104
3035	Reference list for the replacement of permanent installed parts	3105
3036	Reference list for the replacement of permanent installed parts	3106
3037	Reference list for the replacement of permanent installed parts	3109
3038	Reference list for the replacement of permanent installed parts	3111
3039	Reference list for the replacement of permanent installed parts	3113
3040	Reference list for the replacement of permanent installed parts	3114
3041	Reference list for the replacement of permanent installed parts	3116

TABLE	TITLE	PAGE
3042	Consumable Materials	3119
3043	Fixtures, Tools, Test and Support Equipment	3119
3044	Reference list for the replacement of permanent installed parts	3120
3045	Reference list for the replacement of permanent installed parts	3122
3046	Reference list for the replacement of permanent installed parts	3123
3047	Reference list for the replacement of permanent installed parts	3125
3048	Reference list for the replacement of permanent installed parts	3127
3049	Reference list for the replacement of permanent installed parts	3129
3050	Reference list for the replacement of permanent installed parts	3131
3051	Reference list for the replacement of permanent installed parts	3132
3052	Reference list for the replacement of permanent installed parts	3134
3053	Reference list for the replacement of permanent installed parts	3135
3054	Consumable Materials	3138
3055	Reference list for the replacement of permanent installed parts	3139
3056	Reference list for the replacement of permanent installed parts	3141
3057	Reference list for the replacement of permanent installed parts	3142

TABLE	TITLE	PAGE
3058	Reference list for the replacement of permanent installed parts	3144
3059	Reference list for the replacement of permanent installed parts	3145
3060	Reference list for the replacement of permanent installed parts	3147
3061	Reference list for the replacement of permanent installed parts	3148
3062	Reference list for the replacement of permanent installed parts	3150
3063	Reference list for the replacement of permanent installed parts	3151
3064	Reference list for the replacement of permanent installed parts	3153
3065	Reference list for the replacement of permanent installed parts	3154
3066	Reference list for the replacement of permanent installed parts	3155
3067	Consumable Materials	3158
3068	Fixtures, Tools, Test and Support Equipment	3158
3069	Reference list for the replacement of permanent installed parts	3159
3070	Reference list for the replacement of permanent installed parts	3161
3071	Reference list for the replacement of permanent installed parts	3163
3072	Reference list for the replacement of permanent installed parts	3164
3073	Reference list for the replacement of permanent installed parts	3166

TABLE	TITLE	PAGE
3074	Reference list for the replacement of permanent installed parts	3167
3075	Reference list for the replacement of permanent installed parts	3169
3076	Reference list for the replacement of permanent installed parts	3173
3077	Reference list for the replacement of permanent installed parts	3174
3078	Reference list for the replacement of permanent installed parts	3176
3079	Reference list for the replacement of permanent installed parts	3177
3080	Reference list for the replacement of permanent installed parts	3179
3081	Reference list for the replacement of permanent installed parts	3180
3082	Reference list for the replacement of permanent installed parts	3181
3083	Consumable Materials	3184
3084	Reference list for the replacement of permanent installed parts	3185
3085	Reference list for the replacement of permanent installed parts	3187
3086	Reference list for the replacement of permanent installed parts	3188
3087	Reference list for the replacement of permanent installed parts	3190
3088	Reference list for the replacement of permanent installed parts	3191
3089	Reference list for the replacement of permanent installed parts	3193

TABLE	TITLE	PAGE
3090	Reference list for the replacement of permanent installed parts	3194
3091	Reference list for the replacement of permanent installed parts	3196
3092	Reference list for the replacement of permanent installed parts	3197
3093	Reference list for the replacement of permanent installed parts	3198
3094	Reference list for the replacement of permanent installed parts	3200
3095	Reference list for the replacement of permanent installed parts	3204
3096	Reference list for the replacement of permanent installed parts	3205
3097	Reference list for the replacement of permanent installed parts	3207
3098	Reference list for the replacement of permanent installed parts	3208
3099	Reference list for the replacement of permanent installed parts	3210
3100	Reference list for the replacement of permanent installed parts	3211
3101	Reference list for the replacement of permanent installed parts	3212
3102	Reference list for the replacement of permanent installed parts	3214
3103	Reference list for the replacement of permanent installed parts	3215
3104	Consumable Materials	3218
3105	Fixtures, Tools, Test and Support Equipment	3218

TABLE	TITLE	PAGE
3106	Reference list for the replacement of permanent installed parts	3219
3107	Reference list for the replacement of permanent installed parts	3221
3108	Reference list for the replacement of permanent installed parts	3222
3109	Reference list for the replacement of permanent installed parts	3224
3110	Reference list for the replacement of permanent installed parts	3226
3111	Reference list for the replacement of permanent installed parts	3228
3112	Reference list for the replacement of permanent installed parts	3229
3113	Reference list for the replacement of permanent installed parts	3231
3114	Consumable Materials	3234
3115	Fixtures, Tools, Test and Support Equipment	3234
3116	Reference list for the replacement of permanent installed parts	3235
3117	Reference list for the replacement of permanent installed parts	3237
3118	Reference list for the replacement of permanent installed parts	3240
3119	Reference list for the replacement of permanent installed parts	3242
3120	Reference list for the replacement of permanent installed parts	3243
3121	Reference list for the replacement of permanent installed parts	3245

TABLE	TITLE	PAGE
3122	Reference list for the replacement of permanent installed parts	3246
3123	Reference list for the replacement of permanent installed parts	3248
3124	Reference list for the replacement of permanent installed parts	3249
3125	Reference list for the replacement of permanent installed parts	3250
3126	Reference list for the replacement of permanent installed parts	3252
3127	Consumable Materials	3255
3128	Fixtures, Tools, Test and Support Equipment	3255
3129	Reference list for the replacement of permanent installed parts	3256
3130	Reference list for the replacement of permanent installed parts	3259
3131	Reference list for the replacement of permanent installed parts	3260
3132	Reference list for the replacement of permanent installed parts	3262
3133	Reference list for the replacement of permanent installed parts	3263
3134	Reference list for the replacement of permanent installed parts	3265
3135	Reference list for the replacement of permanent installed parts	3266
3136	Consumable Materials	3269
3137	Fixtures, Tools, Test and Support Equipment	3269

TABLE	TITLE	PAGE
3138	Reference list for the replacement of permanent installed parts	3270
3139	Reference list for the replacement of permanent installed parts	3272
3140	Reference list for the replacement of permanent installed parts	3274
3141	Reference list for the replacement of permanent installed parts	3275
3142	Reference list for the replacement of permanent installed parts	3277
3143	Reference list for the replacement of permanent installed parts	3278
3144	Reference list for the replacement of permanent installed parts	3280
3145	Reference list for the replacement of permanent installed parts	3281
3146	Reference list for the replacement of permanent installed parts	3283
3147	Reference list for the replacement of permanent installed parts	3287
3148	Reference list for the replacement of permanent installed parts	3289
3149	Reference list for the replacement of permanent installed parts	3290
3150	Reference list for the replacement of permanent installed parts	3292
3151	Reference list for the replacement of permanent installed parts	3293
3152	Reference list for the replacement of permanent installed parts	3295
3153	Reference list for the replacement of permanent installed parts	3296

TABLE	TITLE	PAGE
3154	Reference list for the replacement of permanent installed parts	3297
3155	Reference list for the replacement of permanent installed parts	3299
3156	Consumable Materials	3302
3157	Fixtures, Tools, Test and Support Equipment	3303
3158	Reference list for the replacement of permanent installed parts	3304
3159	Reference list for the replacement of permanent installed parts	3306
3160	Reference list for the replacement of permanent installed parts	3308
3161	Reference list for the replacement of permanent installed parts	3309
3162	Reference list for the replacement of permanent installed parts	3311
3163	Reference list for the replacement of permanent installed parts	3312
3164	Reference list for the replacement of permanent installed parts	3313
3165	Reference list for the replacement of permanent installed parts	3315
3166	Reference list for the replacement of permanent installed parts	3316
3167	Consumable Materials	3319
3168	Reference list for the replacement of permanent installed parts	3321
3169	Reference list for the replacement of permanent installed parts	3322

TABLE	TITLE	PAGE
3170	Reference list for the replacement of permanent installed parts	3324
3171	Reference list for the replacement of permanent installed parts	3325
3172	Reference list for the replacement of permanent installed parts	3327
3173	Reference list for the replacement of permanent installed parts	3328
3174	Reference list for the replacement of permanent installed parts	3329
3175	Reference list for the replacement of permanent installed parts	3331
3176	Consumable Materials	3334
3177	Fixtures, Tools, Test and Support Equipment	3334
3178	Reference list for the replacement of permanent installed parts	3335
3179	Reference list for the replacement of permanent installed parts	3337
3180	Reference list for the replacement of permanent installed parts	3339
3181	Reference list for the replacement of permanent installed parts	3340
3182	Reference list for the replacement of permanent installed parts	3342
3183	Reference list for the replacement of permanent installed parts	3343
3184	Reference list for the replacement of permanent installed parts	3345
3185	Reference list for the replacement of permanent installed parts	3346

TABLE	TITLE	PAGE
3186	Consumable Materials	3349
3187	Reference list for the replacement of permanent installed parts	3350
3188	Reference list for the replacement of permanent installed parts	3352
3189	Reference list for the replacement of permanent installed parts	3353
3190	Reference list for the replacement of permanent installed parts	3355
3191	Reference list for the replacement of permanent installed parts	3356
3192	Reference list for the replacement of permanent installed parts	3358
3193	Reference list for the replacement of permanent installed parts	3359
3194	Reference list for the replacement of permanent installed parts	3363
3195	Reference list for the replacement of permanent installed parts	3364
3196	Reference list for the replacement of permanent installed parts	3366
3197	Reference list for the replacement of permanent installed parts	3367
3198	Reference list for the replacement of permanent installed parts	3371
3199	Reference list for the replacement of permanent installed parts	3375
3200	Reference list for the replacement of permanent installed parts	3376
3201	Reference list for the replacement of permanent installed parts	3378

TABLE	TITLE	PAGE
3202	Reference list for the replacement of permanent installed parts	3379
3203	Reference list for the replacement of permanent installed parts	3381
3204	Reference list for the replacement of permanent installed parts	3382
3205	Reference list for the replacement of permanent installed parts	3384
3206	Reference list for the replacement of permanent installed parts	3385
3207	Reference list for the replacement of permanent installed parts	3386
3208	Consumable Materials	3389
3209	Fixtures, Tools, Test and Support Equipment	3389
3210	Reference list for the replacement of permanent installed parts	3390
3211	Reference list for the replacement of permanent installed parts	3392
3212	Reference list for the replacement of permanent installed parts	3394
3213	Reference list for the replacement of permanent installed parts	3395
3214	Reference list for the replacement of permanent installed parts	3397
3215	Reference list for the replacement of permanent installed parts	3398
3216	Reference list for the replacement of permanent installed parts	3400
3217	Reference list for the replacement of permanent installed parts	3401

TABLE	TITLE	PAGE
3218	Reference list for the replacement of permanent installed parts	3402
3219	Reference list for the replacement of permanent installed parts	3404
3220	Consumable Materials	3407
3221	Fixtures, Tools, Test and Support Equipment	3407
3222	Reference list for the replacement of permanent installed parts	3408
3223	Reference list for the replacement of permanent installed parts	3410
3224	Reference list for the replacement of permanent installed parts	3412
3225	Reference list for the replacement of permanent installed parts	3413
3226	Reference list for the replacement of permanent installed parts	3414
3227	Reference list for the replacement of permanent installed parts	3416
3228	Reference list for the replacement of permanent installed parts	3417
3229	Reference list for the replacement of permanent installed parts	3419
3230	Consumable Materials	3422
3231	Fixtures, Tools, Test and Support Equipment	3422
3232	Reference list for the replacement of permanent installed parts	3423
3233	Reference list for the replacement of permanent installed parts	3426

TABLE	TITLE	PAGE
3234	Reference list for the replacement of permanent installed parts	3427
3235	Reference list for the replacement of permanent installed parts	3429
3236	Reference list for the replacement of permanent installed parts	3430
3237	Reference list for the replacement of permanent installed parts	3432
3238	Reference list for the replacement of permanent installed parts	3433
3239	Consumable Materials	3436
3240	Fixtures, Tools, Test and Support Equipment	3436
3241	Reference list for the replacement of permanent installed parts	3437
3242	Reference list for the replacement of permanent installed parts	3440
3243	Reference list for the replacement of permanent installed parts	3441
3244	Reference list for the replacement of permanent installed parts	3443
3245	Reference list for the replacement of permanent installed parts	3444
3246	Reference list for the replacement of permanent installed parts	3446
3247	Reference list for the replacement of permanent installed parts	3447
3248	Reference list for the replacement of permanent installed parts	3453
3249	Reference list for the replacement of permanent installed parts	3454

TABLE	TITLE	PAGE
3250	Reference list for the replacement of permanent installed parts	3456
3251	Reference list for the replacement of permanent installed parts	3457
3252	Reference list for the replacement of permanent installed parts	3459
3253	Reference list for the replacement of permanent installed parts	3460
3254	Reference list for the replacement of permanent installed parts	3461
3255	Consumable Materials	3466
3256	Reference list for the replacement of permanent installed parts	3467
3257	Reference list for the replacement of permanent installed parts	3469
3258	Consumable Materials	3472
3259	Reference list for the replacement of permanent installed parts	3473
3260	Reference list for the replacement of permanent installed parts	3475
3261	Reference list for the replacement of permanent installed parts	3477
3262	Consumable Materials	3480
3263	Reference list for the replacement of permanent installed parts	3482
3264	Reference list for the replacement of permanent installed parts	3484
3265	Reference list for the replacement of permanent installed parts	3486

TABLE	TITLE	PAGE
3266	Consumable Materials	3489
3267	Reference list for the replacement of permanent installed parts	3490
3268	Consumable Materials	3495
3269	Reference list for the replacement of permanent installed parts	3496
3270	Reference list for the replacement of permanent installed parts	3498
3271	Consumable Materials	3501
3272	Reference list for the replacement of permanent installed parts	3503
3273	Reference list for the replacement of permanent installed parts	3505
3274	Consumable Materials	3508
3275	Reference list for the replacement of permanent installed parts	3509
3276	Reference list for the replacement of permanent installed parts	3512
3277	Reference list for the replacement of permanent installed parts	3514
3278	Consumable Materials	3517
3279	Reference list for the replacement of permanent installed parts	3519
3280	Reference list for the replacement of permanent installed parts	3521
3281	Consumable Materials	3524

TABLE	TITLE	PAGE
3282	Reference list for the replacement of permanent installed parts	3525
3283	Consumable Materials	3528
3284	Reference list for the replacement of permanent installed parts	3529
3285	Reference list for the replacement of permanent installed parts	3531
3286	Consumable Materials	3535
3287	Reference list for the replacement of permanent installed parts	3536
3288	Consumable Materials	3540
3289	Reference list for the replacement of permanent installed parts	3541
3290	Consumable Materials	3545
3291	Reference list for the replacement of permanent installed parts	3546
3292	Consumable Materials	3549
3293	Reference list for the replacement of permanent installed parts	3550
3294	Reference list for the replacement of permanent installed parts	3552
3295	Reference list for the replacement of permanent installed parts	3554
3296	Consumable Materials	3557
3297	Reference list for the replacement of permanent installed parts	3558

TABLE	TITLE	PAGE
3298	Consumable Materials	3561
3299	Reference list for the replacement of permanent installed parts	3562
3300	Reference list for the replacement of permanent installed parts	3564
3301	Consumable Materials	3567
3302	Reference list for the replacement of permanent installed parts	3568
3303	Reference list for the replacement of permanent installed parts	3570
3304	Consumable Materials	3573
3305	Reference list for the replacement of permanent installed parts	3574
3306	Consumable Materials	3578
3307	Reference list for the replacement of permanent installed parts	3580
3308	Reference list for the replacement of permanent installed parts	3582
3309	Consumable Materials	3585
3310	Reference list for the replacement of permanent installed parts	3586
3311	Reference list for the replacement of permanent installed parts	3588
3312	Consumable Materials	3591
3313	Reference list for the replacement of permanent installed parts	3592

TABLE	TITLE	PAGE
3314	Reference list for the replacement of permanent installed parts	3594
3315	Reference list for the replacement of permanent installed parts	3596
3316	Consumable Materials	3599
3317	Reference list for the replacement of permanent installed parts	3601
3318	Reference list for the replacement of permanent installed parts	3603
3319	Reference list for the replacement of permanent installed parts	3605
3320	Consumable Materials	3608
3321	Reference list for the replacement of permanent installed parts	3610
3322	Reference list for the replacement of permanent installed parts	3611
3323	Consumable Materials	3615
3324	Reference list for the replacement of permanent installed parts	3616
3325	Reference list for the replacement of permanent installed parts	3618
3326	Reference list for the replacement of permanent installed parts	3619
3327	Reference list for the replacement of permanent installed parts	3621
3328	Reference list for the replacement of permanent installed parts	3623
3329	Consumable Materials	3631

TABLE	TITLE	PAGE
3330	Reference list for the replacement of permanent installed parts	3632
3331	Consumable Materials	3645
3332	Fixtures, Tools, Test and Support Equipment	3645
3333	Reference list for the replacement of permanent installed parts	3650
3334	Reference list for the replacement of permanent installed parts	3651
3335	Reference list for the replacement of permanent installed parts	3656
3336	Consumable Materials	3658
3337	Fixtures, Tools, Test and Support Equipment	3659
3338	Reference list for the replacement of permanent installed parts	3660
3339	Reference list for the replacement of permanent installed parts	3662
3340	Consumable Materials	3665
3341	Fixtures, Tools, Test and Support Equipment	3665
3342	Reference list for the replacement of permanent installed parts	3666
3343	Reference list for the replacement of permanent installed parts	3668
3344	Reference list for the replacement of permanent installed parts	3669
3345	Consumable Materials	3672

TABLE	TITLE	PAGE
3346	Fixtures, Tools, Test and Support Equipment	3673
3347	Reference list for the replacement of permanent installed parts	3674
3348	Reference list for the replacement of permanent installed parts	3676
3349	Reference list for the replacement of permanent installed parts	3677
3350	Consumable Materials	3680
3351	Fixtures, Tools, Test and Support Equipment	3681
3352	Reference list for the replacement of permanent installed parts	3682
3353	Reference list for the replacement of permanent installed parts	3684
3354	Consumable Materials	3687
3355	Fixtures, Tools, Test and Support Equipment	3688
3356	Reference list for the replacement of permanent installed parts	3689
3357	Reference list for the replacement of permanent installed parts	3691
3358	Consumable Materials	3695
3359	Fixtures, Tools, Test and Support Equipment	3695
3360	Reference list for the replacement of permanent installed parts	3697
3361	Reference list for the replacement of permanent installed parts	3699

TABLE	TITLE	PAGE
3362	Consumable Materials	3703
3363	Fixtures, Tools, Test and Support Equipment	3703
3364	Reference list for the replacement of permanent installed parts	3704
3365	Reference list for the replacement of permanent installed parts	3706
3366	Consumable Materials	3710
3367	Fixtures, Tools, Test and Support Equipment	3710
3368	Reference list for the replacement of permanent installed parts	3711
3369	Reference list for the replacement of permanent installed parts	3713
3370	Consumable Materials	3716
3371	Fixtures, Tools, Test and Support Equipment	3717
3372	Reference list for the replacement of permanent installed parts	3718
3373	Reference list for the replacement of permanent installed parts	3720
3374	Consumable Materials	3723
3375	Fixtures, Tools, Test and Support Equipment	3724
3376	Reference list for the replacement of permanent installed parts	3725
3377	Reference list for the replacement of permanent installed parts	3726

TABLE	TITLE	PAGE
3378	Consumable Materials	3729
3379	Fixtures, Tools, Test and Support Equipment	3730
3380	Reference list for the replacement of permanent installed parts	3731
3381	Reference list for the replacement of permanent installed parts	3733
3382	Consumable Materials	3736
3383	Fixtures, Tools, Test and Support Equipment	3736
3384	Reference list for the replacement of permanent installed parts	3737
3385	Reference list for the replacement of permanent installed parts	3739
3386	Consumable Materials	3742
3387	Fixtures, Tools, Test and Support Equipment	3742
3388	Reference list for the replacement of permanent installed parts	3743
3389	Reference list for the replacement of permanent installed parts	3745
3390	Consumable Materials	3748
3391	Fixtures, Tools, Test and Support Equipment	3749
3392	Reference list for the replacement of permanent installed parts	3750
3393	Reference list for the replacement of permanent installed parts	3751

TABLE	TITLE	PAGE
3394	Consumable Materials	3754
3395	Fixtures, Tools, Test and Support Equipment	3754
3396	Reference list for the replacement of permanent installed parts	3755
3397	Reference list for the replacement of permanent installed parts	3757
3398	Reference list for the replacement of permanent installed parts	3759
3399	Consumable Materials	3762
3400	Fixtures, Tools, Test and Support Equipment	3762
3401	Reference list for the replacement of permanent installed parts	3763
3402	Consumable Materials	3766
3403	Fixtures, Tools, Test and Support Equipment	3766
3404	Reference list for the replacement of permanent installed parts	3767
3405	Consumable Materials	3770
3406	Reference list for the replacement of permanent installed parts	3771
3407	Reference list for the replacement of permanent installed parts	3774
3408	Consumable Materials	3778
3409	Reference list for the replacement of permanent installed parts	3780

TABLE	TITLE	PAGE
3410	Reference list for the replacement of permanent installed parts	3782
3411	Consumable Materials	3787
3412	Reference list for the replacement of permanent installed parts	3788
3413	Consumable Materials	3794
3414	Reference list for the replacement of permanent installed parts	3797
3415	Reference list for the replacement of permanent installed parts	3799
3416	Consumable Materials	3805
3417	Reference list for the replacement of permanent installed parts	3807
3418	Reference list for the replacement of permanent installed parts	3810
3419	Reference list for the replacement of permanent installed parts	3813
3420	Reference list for the replacement of permanent installed parts	3816
3421	Consumable Materials	3822
3422	Reference list for the replacement of permanent installed parts	3823
3423	Reference list for the replacement of permanent installed parts	3825
3424	Consumable Materials	3829
3425	Reference list for the replacement of permanent installed parts	3830

TABLE	TITLE	PAGE
3426	Consumable Materials	3836
3427	Reference list for the replacement of permanent installed parts	3838
3428	Reference list for the replacement of permanent installed parts	3842
3429	Consumable Materials	3847
3430	Reference list for the replacement of permanent installed parts	3848
3431	Reference list for the replacement of permanent installed parts	3851
3432	Consumable Materials	3856
3433	Reference list for the replacement of permanent installed parts	3857
3434	Consumable Materials	3865
3435	Reference list for the replacement of permanent installed parts	3866
3436	Reference list for the replacement of permanent installed parts	3867
3437	Consumable Materials	3869
3438	Reference list for the replacement of permanent installed parts	3870
3439	Consumable Materials	3873
3440	Reference list for the replacement of permanent installed parts	3874
3441	Reference list for the replacement of permanent installed parts	3875

TABLE	TITLE	PAGE
3442	Reference list for the replacement of permanent installed parts	3876
3443	Consumable Materials	3879
3444	Reference list for the replacement of permanent installed parts	3880
3445	Consumable Materials	3882
3446	Reference list for the replacement of permanent installed parts	3884
3447	Reference list for the replacement of permanent installed parts	3885
3448	Consumable Materials	3887
3449	Reference list for the replacement of permanent installed parts	3888
3450	Consumable Materials	3891
3451	Reference list for the replacement of permanent installed parts	3892
3452	Consumable Materials	3895
3453	Reference list for the replacement of permanent installed parts	3896
3454	Reference list for the replacement of permanent installed parts	3897
3455	Consumable Materials	3899
3456	Reference list for the replacement of permanent installed parts	3900
3457	Consumable Materials	3903

TABLE	TITLE	PAGE
3458	Reference list for the replacement of permanent installed parts	3904
3459	Consumable Materials	3907
3460	Reference list for the replacement of permanent installed parts	3909
3461	Reference list for the replacement of permanent installed parts	3910
3462	Consumable Materials	3912
3463	Reference list for the replacement of permanent installed parts	3913
3464	Consumable Materials	3915
3465	Reference list for the replacement of permanent installed parts	3916
3466	Reference list for the replacement of permanent installed parts	3917
3467	Consumable Materials	3919
3468	Reference list for the replacement of permanent installed parts	3920
3469	Consumable Materials	3923
3470	Reference list for the replacement of permanent installed parts	3924
3471	Consumable Materials	3927
3472	Reference list for the replacement of permanent installed parts	3928
3473	Consumable Materials	3931

TABLE	TITLE	PAGE
3474	Reference list for the replacement of permanent installed parts	3932
3475	Consumable Materials	3935
3476	Reference list for the replacement of permanent installed parts	3936
3477	Consumable Materials	3939
3478	Reference list for the replacement of permanent installed parts	3941
3479	Consumable Materials	3944
3480	Reference list for the replacement of permanent installed parts	3945
3481	Consumable Materials	3948
3482	Reference list for the replacement of permanent installed parts	3949
3483	Consumable Materials	3952
3484	Reference list for the replacement of permanent installed parts	3954
3485	Reference list for the replacement of permanent installed parts	3955
3486	Consumable Materials	3962
3487	Reference list for the replacement of permanent installed parts	3964
3488	Reference list for the replacement of permanent installed parts	3968
3489	Consumable Materials	3971

TABLE	TITLE	PAGE
3490	Reference list for the replacement of permanent installed parts	3972
3491	Reference list for the replacement of permanent installed parts	3973
3492	Consumable Materials	3976
3493	Reference list for the replacement of permanent installed parts	3977
3494	Consumable Materials	3979
3495	Reference list for the replacement of permanent installed parts	3980
3496	Reference list for the replacement of permanent installed parts	3996
3497	Reference list for the replacement of permanent installed parts	3998
3498	Reference list for the replacement of permanent installed parts	3999
3499	Reference list for the replacement of permanent installed parts	4003
3500	Reference list for the replacement of permanent installed parts	4005
3501	Reference list for the replacement of permanent installed parts	4009
3502	Reference list for the replacement of permanent installed parts	4014
3503	Reference list for the replacement of permanent installed parts	4015
3504	Reference list for the replacement of permanent installed parts	4017
3505	Reference list for the replacement of permanent installed parts	4019

TABLE	TITLE	PAGE
3506	Reference list for the replacement of permanent installed parts	4020
3507	Reference list for the replacement of permanent installed parts	4026
3508	Reference list for the replacement of permanent installed parts	4027
3509	Reference list for the replacement of permanent installed parts	4029
3510	Reference list for the replacement of permanent installed parts	4031
3511	Reference list for the replacement of permanent installed parts	4034
3512	Reference list for the replacement of permanent installed parts	4035
3513	Reference list for the replacement of permanent installed parts	4037
3514	Reference list for the replacement of permanent installed parts	4041
3515	Reference list for the replacement of permanent installed parts	4042
3516	Reference list for the replacement of permanent installed parts	4044
3517	Reference list for the replacement of permanent installed parts	4046
3518	Reference list for the replacement of permanent installed parts	4050
3519	Reference list for the replacement of permanent installed parts	4054
3520	Reference list for the replacement of permanent installed parts	4055
3521	Reference list for the replacement of permanent installed parts	4057

TABLE	TITLE	PAGE
3522	Reference list for the replacement of permanent installed parts	4061
3523	Reference list for the replacement of permanent installed parts	4063
3524	Reference list for the replacement of permanent installed parts	4065
3525	Reference list for the replacement of permanent installed parts	4067
3526	Reference list for the replacement of permanent installed parts	4068
3527	Reference list for the replacement of permanent installed parts	4070
3528	Reference list for the replacement of permanent installed parts	4071
3529	Reference list for the replacement of permanent installed parts	4076
3530	Reference list for the replacement of permanent installed parts	4077
3531	Reference list for the replacement of permanent installed parts	4079
3532	Reference list for the replacement of permanent installed parts	4083
3533	Reference list for the replacement of permanent installed parts	4087
3534	Reference list for the replacement of permanent installed parts	4091
3535	Reference list for the replacement of permanent installed parts	4093
3536	Consumable Materials	4096
3537	Reference list for the replacement of permanent installed parts	4097

TABLE	TITLE	PAGE
3538	Reference list for the replacement of permanent installed parts	4099
3539	Reference list for the replacement of permanent installed parts	4101
3540	Reference list for the replacement of permanent installed parts	4105
3541	Consumable Materials	4108
3542	Reference list for the replacement of permanent installed parts	4109
3543	Consumable Materials	4112
3544	Reference list for the replacement of permanent installed parts	4113
3545	Reference list for the replacement of permanent installed parts	4117
3546	Reference list for the replacement of permanent installed parts	4118
3547	Reference list for the replacement of permanent installed parts	4122
3548	Reference list for the replacement of permanent installed parts	4129
3549	Reference list for the replacement of permanent installed parts	4132
3550	Reference list for the replacement of permanent installed parts	4137
3551	Reference list for the replacement of permanent installed parts	4141
3552	Reference list for the replacement of permanent installed parts	4145
3553	Reference list for the replacement of permanent installed parts	4149

TABLE	TITLE	PAGE
3554	Reference list for the replacement of permanent installed parts	4153
3555	Reference list for the replacement of permanent installed parts	4157
3556	Reference list for the replacement of permanent installed parts	4161
3557	Reference list for the replacement of permanent installed parts	4162
3558	Reference list for the replacement of permanent installed parts	4178
3559	Consumable Materials	4181
3560	Reference list for the replacement of permanent installed parts	4182
3561	Consumable Materials	4189
3562	Reference list for the replacement of permanent installed parts	4191
3563	Reference list for the replacement of permanent installed parts	4193
3564	Reference list for the replacement of permanent installed parts	4194
3565	Reference list for the replacement of permanent installed parts	4199
3566	Reference list for the replacement of permanent installed parts	4201
3567	Reference list for the replacement of permanent installed parts	4203
3568	Reference list for the replacement of permanent installed parts	4206
3569	Reference list for the replacement of permanent installed parts	4209

TABLE	TITLE	PAGE
3570	Reference list for the replacement of permanent installed parts	4211
3571	Reference list for the replacement of permanent installed parts	4213
3572	Reference list for the replacement of permanent installed parts	4220
3573	Reference list for the replacement of permanent installed parts	4222
3574	Reference list for the replacement of permanent installed parts	4224
3575	Reference list for the replacement of permanent installed parts	4229
3576	Reference list for the replacement of permanent installed parts	4232
3577	Reference list for the replacement of permanent installed parts	4234
3578	Reference list for the replacement of permanent installed parts	4240
3579	Reference list for the replacement of permanent installed parts	4243
3580	Reference list for the replacement of permanent installed parts	4246
3581	Reference list for the replacement of permanent installed parts	4249
3582	Reference list for the replacement of permanent installed parts	4252
3583	Reference list for the replacement of permanent installed parts	4255
3584	Reference list for the replacement of permanent installed parts	4260
3585	Reference list for the replacement of permanent installed parts	4265

TABLE	TITLE	PAGE
3586	Reference list for the replacement of permanent installed parts	4267
3587	Reference list for the replacement of permanent installed parts	4270
3588	Reference list for the replacement of permanent installed parts	4272
3589	Consumable Materials	4279
3590	Reference list for the replacement of permanent installed parts	4284
3591	Reference list for the replacement of permanent installed parts	4287
3592	Reference list for the replacement of permanent installed parts	4290
3593	Reference list for the replacement of permanent installed parts	4293
3594	Reference list for the replacement of permanent installed parts	4296
3595	Consumable Materials	4300
3596	Reference list for the replacement of permanent installed parts	4301
3597	Reference list for the replacement of permanent installed parts	4304
3598	Reference list for the replacement of permanent installed parts	4307
3599	Consumable Materials	4313
3600	Reference list for the replacement of permanent installed parts	4314
3601	Reference list for the replacement of permanent installed parts	4316

TABLE	TITLE	PAGE
3602	Reference list for the replacement of permanent installed parts	4319
3603	Consumable Materials	4323
3604	Reference list for the replacement of permanent installed parts	4324
3605	Consumable Materials	4328
3606	Reference list for the replacement of permanent installed parts	4329
3607	Reference list for the replacement of permanent installed parts	4341
3608	Reference list for the replacement of permanent installed parts	4345
3609	Consumable Materials	4353
3610	Reference list for the replacement of permanent installed parts	4355
3611	Reference list for the replacement of permanent installed parts	4356
3612	Reference list for the replacement of permanent installed parts	4358
3613	Consumable Materials	4363
3614	Reference list for the replacement of permanent installed parts	4364
3615	Consumable Materials	4369
3616	Reference list for the replacement of permanent installed parts	4370
3617	Reference list for the replacement of permanent installed parts	4374

TABLE	TITLE	PAGE
3618	Reference list for the replacement of permanent installed parts	4376
3619	Reference list for the replacement of permanent installed parts	4397
3620	Reference list for the replacement of permanent installed parts	4402
3621	Reference list for the replacement of permanent installed parts	4404
3622	Reference list for the replacement of permanent installed parts	4408
3623	Reference list for the replacement of permanent installed parts	4410
3624	Reference list for the replacement of permanent installed parts	4415
3625	Reference list for the replacement of permanent installed parts	4417
3626	Reference list for the replacement of permanent installed parts	4422
3627	Reference list for the replacement of permanent installed parts	4424
3628	Reference list for the replacement of permanent installed parts	4429
3629	Reference list for the replacement of permanent installed parts	4431
3630	Reference list for the replacement of permanent installed parts	4439
3631	Reference list for the replacement of permanent installed parts	4444
3632	Reference list for the replacement of permanent installed parts	4447
3633	Reference list for the replacement of permanent installed parts	4448

TABLE	TITLE	PAGE
3634	Reference list for the replacement of permanent installed parts	4459
3635	Reference list for the replacement of permanent installed parts	4460
3636	Reference list for the replacement of permanent installed parts	4463
3637	Reference list for the replacement of permanent installed parts	4488
3638	Reference list for the replacement of permanent installed parts	4506
3639	Reference list for the replacement of permanent installed parts	4527
3640	Reference list for the replacement of permanent installed parts	4529
3641	Reference list for the replacement of permanent installed parts	4531
3642	Reference list for the replacement of permanent installed parts	4533
3643	Reference list for the replacement of permanent installed parts	4549
3644	Reference list for the replacement of permanent installed parts	4560
3645	Reference list for the replacement of permanent installed parts	4568
3646	Reference list for the replacement of permanent installed parts	4590
3647	Reference list for the replacement of permanent installed parts	4592
3648	Reference list for the replacement of permanent installed parts	4601
3649	Reference list for the replacement of permanent installed parts	4614

TABLE	TITLE	PAGE
3650	Reference list for the replacement of permanent installed parts	4618
3651	Reference list for the replacement of permanent installed parts	4623
3652	Reference list for the replacement of permanent installed parts	4629
3653	Reference list for the replacement of permanent installed parts	4637
3654	Reference list for the replacement of permanent installed parts	4643
3655	Consumable Materials	4648
3656	Reference list for the replacement of permanent installed parts	4649
3657	Consumable Materials	4703
3658	Reference list for the replacement of permanent installed parts	4704
3659	Reference list for the replacement of permanent installed parts	4706
3660	Reference list for the replacement of permanent installed parts	4708
3661	Reference list for the replacement of permanent installed parts	4709
3662	Consumable Materials	4713
3663	Reference list for the replacement of permanent installed parts	4714
3664	Reference list for the replacement of permanent installed parts	4716
3665	Reference list for the replacement of permanent installed parts	4718

TABLE	TITLE	PAGE
3666	Consumable Materials	4721
3667	Reference list for the replacement of permanent installed parts	4722
3668	Reference list for the replacement of permanent installed parts	4724
3669	Reference list for the replacement of permanent installed parts	4726
3670	Reference list for the replacement of permanent installed parts	4727
3671	Consumable Materials	4730
3672	Reference list for the replacement of permanent installed parts	4731
3673	Reference list for the replacement of permanent installed parts	4733
3674	Reference list for the replacement of permanent installed parts	4735
3675	Consumable Materials	4742
3676	Reference list for the replacement of permanent installed parts	4743
3677	Reference list for the replacement of permanent installed parts	4745
3678	Consumable Materials	4753
3679	Reference list for the replacement of permanent installed parts	4754
3680	Reference list for the replacement of permanent installed parts	4756
3681	Reference list for the replacement of permanent installed parts	4758

TABLE	TITLE	PAGE
3682	Reference list for the replacement of permanent installed parts	4759
3683	Reference list for the replacement of permanent installed parts	4761
3684	Reference list for the replacement of permanent installed parts	4762
3685	Reference list for the replacement of permanent installed parts	4764
3686	Reference list for the replacement of permanent installed parts	4768
3687	Reference list for the replacement of permanent installed parts	4770
3688	Reference list for the replacement of permanent installed parts	4771
3689	Consumable Materials	4774
3690	Fixtures, Tools, Test and Support Equipment	4774
3691	Reference list for the replacement of permanent installed parts	4775
3692	Reference list for the replacement of permanent installed parts	4777
3693	Reference list for the replacement of permanent installed parts	4779
3694	Reference list for the replacement of permanent installed parts	4781
3695	Reference list for the replacement of permanent installed parts	4783
3696	Reference list for the replacement of permanent installed parts	4785
3697	Reference list for the replacement of permanent installed parts	4787

TABLE	TITLE	PAGE
3698	Reference list for the replacement of permanent installed parts	4789
3699	Consumable Materials	4792
3700	Fixtures, Tools, Test and Support Equipment	4792
3701	Reference list for the replacement of permanent installed parts	4793
3702	Reference list for the replacement of permanent installed parts	4795
3703	Reference list for the replacement of permanent installed parts	4797
3704	Reference list for the replacement of permanent installed parts	4798
3705	Reference list for the replacement of permanent installed parts	4800
3706	Reference list for the replacement of permanent installed parts	4801
3707	Consumable Materials	4804
3708	Fixtures, Tools, Test and Support Equipment	4804
3709	Reference list for the replacement of permanent installed parts	4805
3710	Reference list for the replacement of permanent installed parts	4808
3711	Reference list for the replacement of permanent installed parts	4809
3712	Reference list for the replacement of permanent installed parts	4811
3713	Reference list for the replacement of permanent installed parts	4813

TABLE	TITLE	PAGE
3714	Reference list for the replacement of permanent installed parts	4814
3715	Reference list for the replacement of permanent installed parts	4816
3716	Reference list for the replacement of permanent installed parts	4817
3717	Reference list for the replacement of permanent installed parts	4818
3718	Consumable Materials	4821
3719	Fixtures, Tools, Test and Support Equipment	4821
3720	Reference list for the replacement of permanent installed parts	4822
3721	Reference list for the replacement of permanent installed parts	4825
3722	Reference list for the replacement of permanent installed parts	4827
3723	Reference list for the replacement of permanent installed parts	4830
3724	Reference list for the replacement of permanent installed parts	4832
3725	Reference list for the replacement of permanent installed parts	4833
3726	Reference list for the replacement of permanent installed parts	4835
3727	Consumable Materials	4839
3728	Fixtures, Tools, Test and Support Equipment	4839
3729	Reference list for the replacement of permanent installed parts	4840

TABLE	TITLE	PAGE
3730	Reference list for the replacement of permanent installed parts	4843
3731	Reference list for the replacement of permanent installed parts	4845
3732	Reference list for the replacement of permanent installed parts	4846
3733	Reference list for the replacement of permanent installed parts	4848
3734	Reference list for the replacement of permanent installed parts	4850
3735	Reference list for the replacement of permanent installed parts	4852
3736	Reference list for the replacement of permanent installed parts	4854
3737	Reference list for the replacement of permanent installed parts	4856
3738	Consumable Materials	4859
3739	Fixtures, Tools, Test and Support Equipment	4859
3740	Reference list for the replacement of permanent installed parts	4861
3741	Reference list for the replacement of permanent installed parts	4863
3742	Consumable Materials	4866
3743	Fixtures, Tools, Test and Support Equipment	4866
3744	Reference list for the replacement of permanent installed parts	4867
3745	Reference list for the replacement of permanent installed parts	4869

TABLE	TITLE	PAGE
3746	Reference list for the replacement of permanent installed parts	4872
3747	Reference list for the replacement of permanent installed parts	4874
3748	Reference list for the replacement of permanent installed parts	4875
3749	Reference list for the replacement of permanent installed parts	4877
3750	Reference list for the replacement of permanent installed parts	4879
3751	Reference list for the replacement of permanent installed parts	4881
3752	Reference list for the replacement of permanent installed parts	4883
3753	Consumable Materials	4886
3754	Fixtures, Tools, Test and Support Equipment	4886
3755	Reference list for the replacement of permanent installed parts	4887
3756	Reference list for the replacement of permanent installed parts	4890
3757	Reference list for the replacement of permanent installed parts	4892
3758	Reference list for the replacement of permanent installed parts	4894
3759	Reference list for the replacement of permanent installed parts	4896
3760	Reference list for the replacement of permanent installed parts	4898
3761	Reference list for the replacement of permanent installed parts	4900

TABLE	TITLE	PAGE
3762	Consumable Materials	4903
3763	Fixtures, Tools, Test and Support Equipment	4903
3764	Reference list for the replacement of permanent installed parts	4905
3765	Reference list for the replacement of permanent installed parts	4907
3766	Reference list for the replacement of permanent installed parts	4909
3767	Reference list for the replacement of permanent installed parts	4911
3768	Reference list for the replacement of permanent installed parts	4913
3769	Reference list for the replacement of permanent installed parts	4915
3770	Consumable Materials	4918
3771	Fixtures, Tools, Test and Support Equipment	4918
3772	Reference list for the replacement of permanent installed parts	4919
3773	Reference list for the replacement of permanent installed parts	4922
3774	Reference list for the replacement of permanent installed parts	4924
3775	Reference list for the replacement of permanent installed parts	4926
3776	Consumable Materials	4929
3777	Fixtures, Tools, Test and Support Equipment	4929

TABLE	TITLE	PAGE
3778	Reference list for the replacement of permanent installed parts	4930
3779	Reference list for the replacement of permanent installed parts	4933
3780	Reference list for the replacement of permanent installed parts	4935
3781	Reference list for the replacement of permanent installed parts	4937
3782	Reference list for the replacement of permanent installed parts	4939
3783	Reference list for the replacement of permanent installed parts	4941
3784	Reference list for the replacement of permanent installed parts	4943
3785	Consumable Materials	4946
3786	Fixtures, Tools, Test and Support Equipment	4946
3787	Reference list for the replacement of permanent installed parts	4947
3788	Reference list for the replacement of permanent installed parts	4950
3789	Reference list for the replacement of permanent installed parts	4952
3790	Reference list for the replacement of permanent installed parts	4954
3791	Reference list for the replacement of permanent installed parts	4956
3792	Reference list for the replacement of permanent installed parts	4958
3793	Reference list for the replacement of permanent installed parts	4960

TABLE	TITLE	PAGE
3794	Reference list for the replacement of permanent installed parts	4962
3795	Consumable Materials	4968
3796	Fixtures, Tools, Test and Support Equipment	4968
3797	Reference list for the replacement of permanent installed parts	4969
3798	Reference list for the replacement of permanent installed parts	4971

CLEANING

4001	Consumable Materials	4002
4002	Fixtures, Tools, Test and Support Equipment	4002
4003	Consumable Materials	4005
4004	Fixtures, Tools, Test and Support Equipment	4005
4005	Consumable Materials	4007
4006	Consumable Materials	4009
4007	Fixtures, Tools, Test and Support Equipment	4009
4008	Consumable Materials	4012
4009	Consumable Materials	4014

INSPECTION/CHECK

REPAIR

TABLE	TITLE	PAGE
6001	Decorative Foils	6003
6002	Paint	6008
6003	Consumable Materials	6015
6004	Fixtures, Tools, Test and Support Equipment	6016
6005	Replacement Part	6019
6006	Replacement Part	6021
6007	Replacement Part	6022
6008	Replacement Part	6023
6009	Consumable Materials	6035
6010	Consumable Materials	6038
6011	Fixtures, Tools, Test and Support Equipment	6038
6012	Dosing Quantity	6040
6013	Dosing Quantity	6040
6014	Consumable Materials	6045
6015	Fixtures, Tools, Test and Support Equipment	6045
6016	Repair Material List	6054

TABLE	TITLE	PAGE
6017	Consumable Materials	6055
6018	Fixtures, Tools, Test and Support Equipment	6055
6019	Consumable Materials	6072
6020	Fixtures, Tools, Test and Support Equipment	6072
6021	Repair Kits Table	6072
6022	Consumable Materials	6084
6023	Fixtures, Tools, Test and Support Equipment	6084
6024	Consumable Materials	6090
6025	Fixtures, Tools, Test and Support Equipment	6090
6026	Consumable Materials	6101
6027	Consumable Materials	6107
6028	Fixtures, Tools, Test and Support Equipment	6108
6029	Consumable Materials	6118
6030	Fixtures, Tools, Test and Support Equipment	6118
6031	Placards	6119
6032	Consumable Materials	6127

TABLE	TITLE	PAGE
6033	Fixtures, Tools, Test and Support Equipment	6127
6034	Riveted Parts	6128
ASSEMBLY		
7001	Consumable Materials	7711
7002	Consumable Materials	7717
7003	Consumable Materials	7723
7004	Consumable Materials	7729
7005	Consumable Materials	7734
7006	Consumable Materials	7740
7007	Consumable Materials	7746
7008	Consumable Materials	7751
7009	Consumable Materials	7757
7010	Consumable Materials	7762
7011	Consumable Materials	7767
7012	Consumable Materials	7772
7013	Consumable Materials	7777
7014	Consumable Materials	7782

TABLE	TITLE	PAGE
7015	Consumable Materials	7787
7016	Consumable Materials	7792
7017	Consumable Materials	7795
7018	Consumable Materials	7801
7019	Consumable Materials	7905
7020	Consumable Materials	7920
7021	Consumable Materials	7948
7022	Consumable Materials	7994
7023	Consumable Materials	8006
7024	Consumable Materials	8022
7025	Consumable Materials	8033
7026	Consumable Materials	8058
7027	Consumable Materials	8083
7028	Consumable Materials	8128
7029	Consumable Materials	8142
7030	Consumable Materials	8153

TABLE	TITLE	PAGE
7031	Consumable Materials	8164
7032	Consumable Materials	8334
7033	Consumable Materials	8349
7034	Consumable Materials	8359
7035	Consumable Materials	8372
7036	Consumable Materials	8386
7037	Consumable Materials	8402
7038	Consumable Materials	8407
7039	Consumable Materials	8424
7040	Consumable Materials	8438
7041	Consumable Materials	8450
7042	Consumable Materials	8459
7043	Consumable Materials	8473
7044	Consumable Materials	8492

STORAGE (INCLUDING TRANSPORTATION)

15001	Consumable Material List	15001

ILLUSTRATED PARTS LIST

TABLE	TITLE	PAGE
10001	Interchangeability Definitions.	10007

THIS PAGE IS INTENTIONALLY LEFT BLANK

TABLE OF CONTENTS

REVISION TRANSMITTAL SHEET 1
TITLE PAGE 1
HIGHLIGHTS 1
RECORD OF REVISIONS 1
REVISION OF TEMPORARY REVISIONS 1
LIST OF SERVICE BULLETINS 1
LIST OF EFFECTIVE PAGES 1
LIST OF ILLUSTRATIONS 1
LIST OF TABLES 1
TABLE OF CONTENTS 1
INTRODUCTION 1
DESCRIPTION AND OPERATION 1
TESTING AND FAULT ISOLATION 1001
SCHEMATIC AND WIRING DIAGRAMS 2001
DISASSEMBLY 3001
CLEANING 4001
INSPECTION/CHECK 5001
REPAIR 6001
ASSEMBLY 7001
STORAGE (INCLUDING TRANSPORTATION) 15001
ILLUSTRATED PARTS LIST 10001
IPL INTRODUCTION 10003
ALPHA/NUMERIC INDEX 10010
DETAILED PARTS LIST 10657

THIS PAGE IS INTENTIONALLY LEFT BLANK

INTRODUCTION

TASK 25-41-51-871-801-A01

2. General

A. Purpose and Scope of this Manual

CAUTION: ONLY APPROVED PERSONS WITH THE NECESSARY SKILLS ARE PERMITTED TO DO THE MAINTENANCE PROCEDURES GIVEN IN THIS MANUAL.

(1) This manual has been prepared to show the correct procedures used in the maintenance of a Diehl Aviation Hamburg GmbH (VC5270) manufactured lavatory.

(2) This document is written to the ATA iSpec2200 Specification and in ASD-STE100. SI units of measurement are used in this manual with Imperial units in parentheses.

(3) Maintenance Task Oriented Support System (MTOSS) TASK and Subtask identification is used in this manual. The maintenance tasks and other data have special MTOSS numbers for the use of Electronic Data Processing (EDP). The MTOSS numbers can be ignored by the user of the manual.

(4) The manual gives maintenance on the lavatory in a workshop. It does not give maintenance on the lavatory when it is installed on the aircraft.

(5) This manual contains:

(a) Technical data for the lavatory

(b) Maintenance procedures for the lavatory's components

(c) An Illustrated Parts List (IPL) with data for the lavatory's component parts. Parts are identified in all sections of the manual by the IPL figure and item number.

(6) Disassembly and Assembly procedures are verified by simulation.

TASK 25-41-51-879-801-A01

3. How to Use the Manual

A. General

(1) Make sure the manual contains the information applicable to your lavatory. Look on the TITLE PAGE for the part number.

(2) If you need to identify a part or part number, refer to the ILLUSTRATED PARTS LIST, which has an introduction to show the procedure.

(3) The instructions in this manual must be used for all the component maintenance. Read all the applicable WARNINGS and CAUTIONS before you do the work on the component.

TASK 25-41-51-879-802-A01

4. Revisions and Service Bulletins

A. Manual Revisions

- The manual will be updated as necessary by revisions.

B. Service Bulletins

- Service Bulletins can be issued separately. They will be included into the CMM and IPL at the next possible revision and will be shown in the SERVICE BULLETIN LIST.

TASK 25-41-51-879-803-A01

5. Warnings, Cautions, Notes

A. The adjuncts to the text are expressed by the following headings:

(1) WARNINGS

- Warnings call attention to the use of materials, processes, procedures, methods, or limits that must be obeyed precisely to prevent death or injury of persons.

(2) CAUTIONS

- Cautions call attention to methods and procedures that must be obeyed to prevent damage to the equipment.

(3) NOTES

- Notes call attention to methods that make the job easier.

TASK 25-41-51-879-804-A01

6. Manufacturer

A.

(1) The lavatory is manufactured and product supported by:

Diehl Aviation Hamburg GmbH
Hein-Sass-Weg 41
D-21129 HAMBURG
GERMANY
CAGE Code: C5270

(2) Contact:

Internet: www.diehl.com/aviation

TASK 25-41-51-879-807-A01

7. Abbreviations

ATA	Air Transport Association of America
ASD	Aerospace and Defence Industries Association of Europe
CMM	Component Maintenance Manual
CMS	Component Maintenance Sheet
EAR	Export Aviation Regulation
ESDS	Electrostatic Discharge Sensitive
IPL	Illustrated parts list
MEK	Methylethylketone
NTF	Non Textile Floor
NP	Non Procureable
PC	Poly-Carbonate
PN	Part Number
PSU	Passenger Service Unit
PU	Poly-Urethane
PVC	Poly-Vinyl-Chloride
PVF	Poly-Vinyl-Fluorite
R	Revision
REV	Revision
RTS	Return to Seat
SB	Service Bulletin

SBL	Service Bulletin List
STE	Simplified Technical English
TBD	To Be Defined
TDS	Technical Data Sheet
VSB	Vendor Service Bulletin

DESCRIPTION AND OPERATION

TASK 25-41-51-870-802-A01

1. General

A. The electrical system supplies the electrically operated equipment with power.

B. The potable water system supplies water to the lavatory. Quick disconnect couplings are used for easy replacement.

C. The drainage piping has a connection to the inflight drainage system.

D. The lavatory is equipped with a vacuum toilet.

E. The lavatory has a single door.

F. Subcomponents

(a) For description and operation of these subcomponents refer to the supplier's manuals:

SUBCOMPONENT	VENDOR	CODE	CMM/CMS-NUMBER
Toilet assembly	MONOGRAM SANITATION INC	(29780)	38-34-16
Toilet assembly	MONOGRAM SANITATION INC	(29780)	38-34-20
Infrared faucet assembly	ADAMS RITE SABRE INTERNATIONAL	(80477)	38-20-20
Water faucet	AQUA BUTZKE-WERKE AG	(C3207)	38-11-02
Water faucet	AQUA BUTZKE-WERKE AG	(C3207)	38-11-03
Light assembly	AIRSIGNA GMBH UND CO KG	(DD704)	33-24-05
ESDS smoke detector	CERBERUS SA AVIATION DEPARTMENT CUSTOMER AND PRODUCT SUPPORT	(F4885)	26-17-15
Smoke detector	CERBERUS SA AVIATION DEPARTMENT CUSTOMER AND PRODUCT SUPPORT	(F4885)	26-17-17
ESDS smoke detector	CERBERUS SA AVIATION DEPARTMENT CUSTOMER AND PRODUCT SUPPORT	(F4885)	26-16-16
Oxygen container assy	B/E Aerospace Systems GmbH	(D1379)	-

Fire extinguisher	FIRST TECHNOL-OGY FIRE AND SAFETY LTD PIN GREEN INDUS-TRIAL ESTATE	(U3061)	26-25-12
Call light	AIRSIGNA GMBH UND CO KG	(DD704)	33-20-01
ESDS ballast unit	DIEHL GMBH UND CO LUFTFAHRT ELEKTRONIK	(D1347)	33-24-16
Individual air outlet	B/E AEROSPACE INC GENERAL AVIATION & VIP PRODUCT	(59579)	21-24-19
Water heater	BFGOODRICH AEROSPACE ICE PROTECTION SYSTEMS	(0AJJ0)	38-12-18
Water heater	BFGOODRICH AEROSPACE ICE PROTECTION SYSTEMS	(0AJJ0)	38-12-16
Drain assembly	GKN WESTLAND SITEC GMBH	(C3406)	38-30-02
Drain assembly	GKN WESTLAND SITEC GMBH	(C3406)	38-30-09
Drain assembly	GKN WESTLAND SITEC GMBH	(C3406)	38-30-07
Drain assembly	MONOGRAM SYS-TEMS GMBH	(DJ188)	38-31-14
Simple door latch	INDRAERO SIREN Z.I. DE LA BOURDINE	(F0542)	25-40-01
Latch	ADAMS RITE SA-BRE INTERNATIONAL	(80477)	25-41-60

Non return valve	FLIGHT REFUELLING LTD FR - HI-TEMP DIV	(U9084)	38-10-15
Sign housing	AIRSIGNA GMBH UND CO KG	(DD704)	33-26-06
Water filter assembly	GENERAL ECOLOGY INC	(61372)	38-12-23
Fire extinguisher	KIDDE AEROSPACE INC SERVICE CENTER	(61423)	26-25-04
Loudspeaker	HARMAN AUDIO ELECTRONICS GMBH	(D7320)	23-31-12
Drain valve	CIRCLE SEAL CONTROLS INC	(91816)	38-30-02
Drain valve	FLIGHT REFUELLING LTD FR - HI-TEMP DIV	(U9084)	38-30-30
Cosmetics holder	INNOVINT-EINRICHTUNGS GMBH	(C5307)	25-20-08
Liquid-soap dispenser assembly	CBS CARSTEN DAUS GMBH	(DL161)	25-40-03
Soap dispenser	DIEHL AVIATION HAMBURG GMBH	(C5270)	25-40-99
Fire extinguisher	FIRST TECHNOLOGY FIRE AND SAFETY LTD PIN GREEN INDUSTRIAL ESTATE	(U3061)	26-25-36
Smoke detector	CERBERUS SA AVIATION DEPARTMENT CUSTOMER AND PRODUCT SUPPORT	(F4885)	26-18-18

Advanced-integrated ballast unit	DIEHL GMBH UND CO LUFTFAHRT ELEKTRONIK	(D1347)	33-24-18
Call light	AIRSIGNA GMBH UND CO KG	(DD704)	33-22-01
Light assembly	AIRSIGNA GMBH UND CO KG	(DD704)	33-27-01
Mini inverter	EUROATLAS GMBH	(D2361)	25-44-01

Table 1
Subcomponents Table

G. Dimensions and Weights

(a) Dimensions

Width:	930.0 mm (36.614 in.)
Height:	2125.0 mm (83.661 in.)
Depth:	1181.3 mm (46.508 in.)

Table 2
Dimension Table

(b) Weights
The correct lavatory weight depends on the basic lavatory weight and the weight of the equipment which is installed.

Weight Table

Basic lavatory weight:	110.29 kg (243.144 lb.)
Maximum lavatory weight:	150.98 kg (332.852 lb.)

Table 3
Weight Table

TASK 25-41-51-870-803-A01

2. Description

A. The lavatory has:

NOTE: Refer to Figure 1 and Figure 2.

(a) A casing, which is attached with screws

(b) A rear wall, which is attached with screws

(c) A single door assembly

(d) A vacuum toilet unit

(e) A seat cover dispenser

(f) A oxygen container assy

(g) A smoke detector

(h) A service cabinet

(i) A washbasin

(j) A fire extinguisher

(k) A waste compartment

B. For installation, the lavatory has lower attachment fittings and a strut assembly.

C. The lavatory has a floor pan, which is attached with screws.

D. The toilet flush system is connected to a vacuum system.

E. The lavatory has a casing and a door assembly which are made of a light weight material.

F. The casing has sandwich panels made of honeycomb core with fiberglass coverplates 10 mm (0.39 in.) thick and/or 25 mm (0.984 in.) thick.

G. Special loaded areas e. g. sandwich borders and attachment points are filled with aluminum or nylon fillers.

H. The sandwich panels of the casing are bonded.

I. The sandwich panels have decorative material or are painted.

J. These parts are made of stainless steel or have stainless steel sheets:

(a) The water faucet, the waste chute, the waste flap, the ashtray and the kick strip.

K. The washbasin is made of stainless steel or plastic.

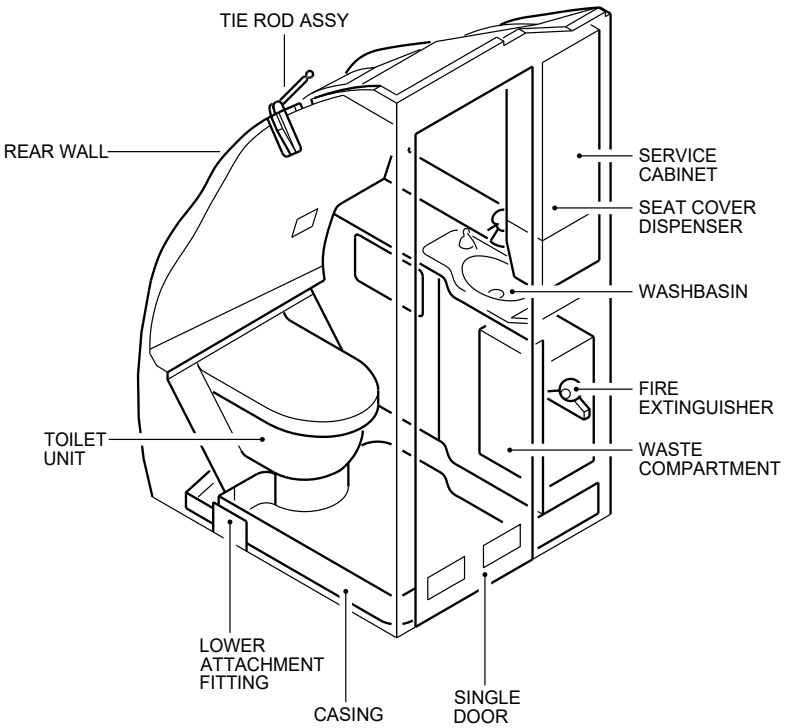

F_CM_254151_1_0010101_01_00

Lavatory A
Figure 1/EN254151SHEET10010101

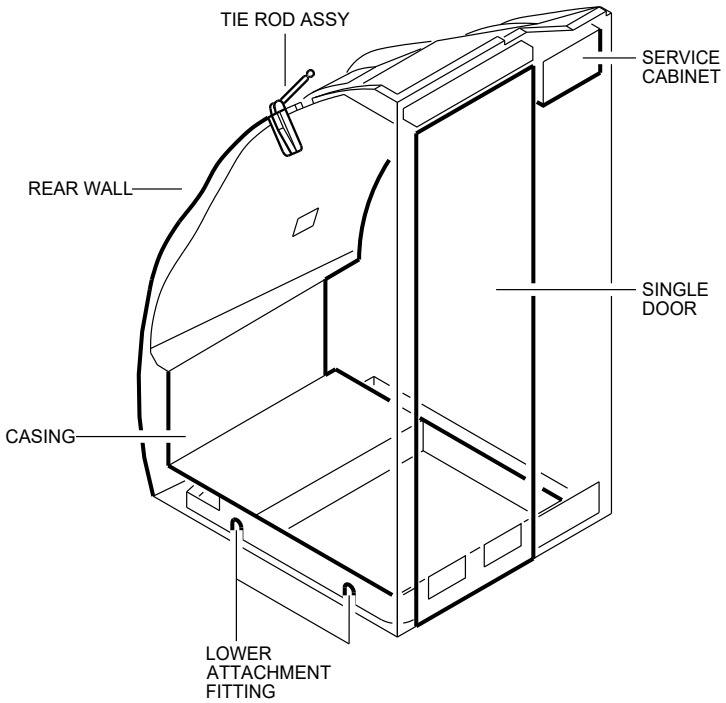

F_CM_254151_1_0020101_01_00

Lavatory A
Figure 2/EN254151SHEET10020101

TASK 25-41-51-870-804-A01

3. Operation

A. Single door assembly

(a) You can lock the single door assembly by a latch in the lavatory.

(b) When the single door is closed and locked, a microswitch operates the TOILET OCCUPIED sign.

B. Fire extinguisher

(a) If there is a fire, the fire extinguisher discharges into the waste container compartment.

(b) The fire extinguisher operates automatically at an environmental temperature of 70° C (158°F).

C. Wiring diagram

(a) For the wiring diagram see.

(b) For the wiring diagram see figure 4.

TESTING AND FAULT ISOLATION

TASK 25-41-51-700-801-A01

1. General

   A. For all Testing and Fault Isolation information refer to

THIS PAGE IS INTENTIONALLY LEFT BLANK

SCHEMATIC AND WIRING DIAGRAMS

TASK 25-41-51-878-805-A01
D2549010500000 D2549010500800 D2549020500200 D2549020500400 D2549020500800 D2549020501800

1. Wiring Diagrams

   A. For the wiring diagram see Figure 2001, Figure 2002, Figure 2003, Figure 2004 and Figure 2005 .

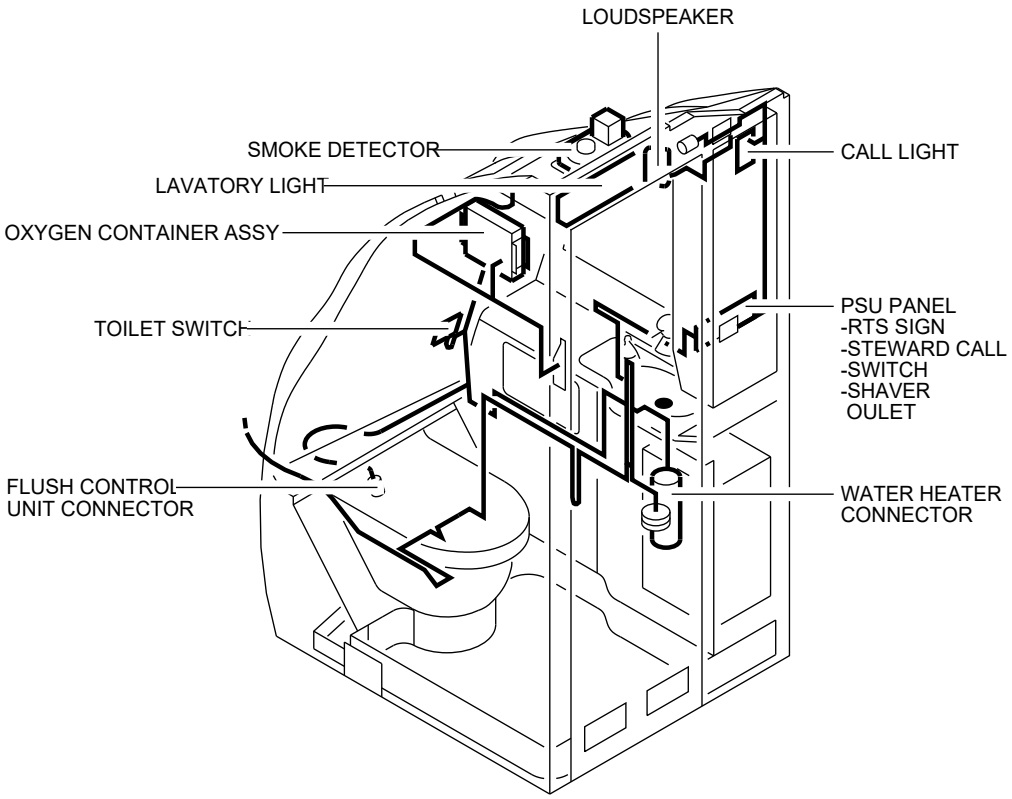

F_CM_254151_1_0030101_01_00

Wiring and Electrical Equipment
Figure 2001/EN254151SHEET10030101

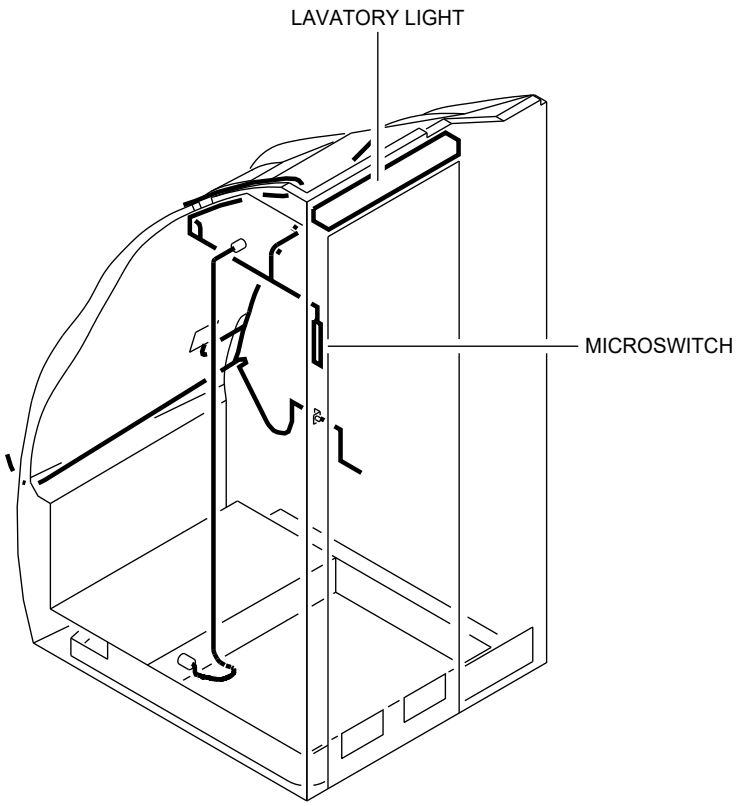

F_CM_254151_1_0040101_01_00

Wiring and Electrical Equipment
Figure 2002/EN254151SHEET10040101

THIS PAGE IS INTENTIONALLY LEFT BLANK

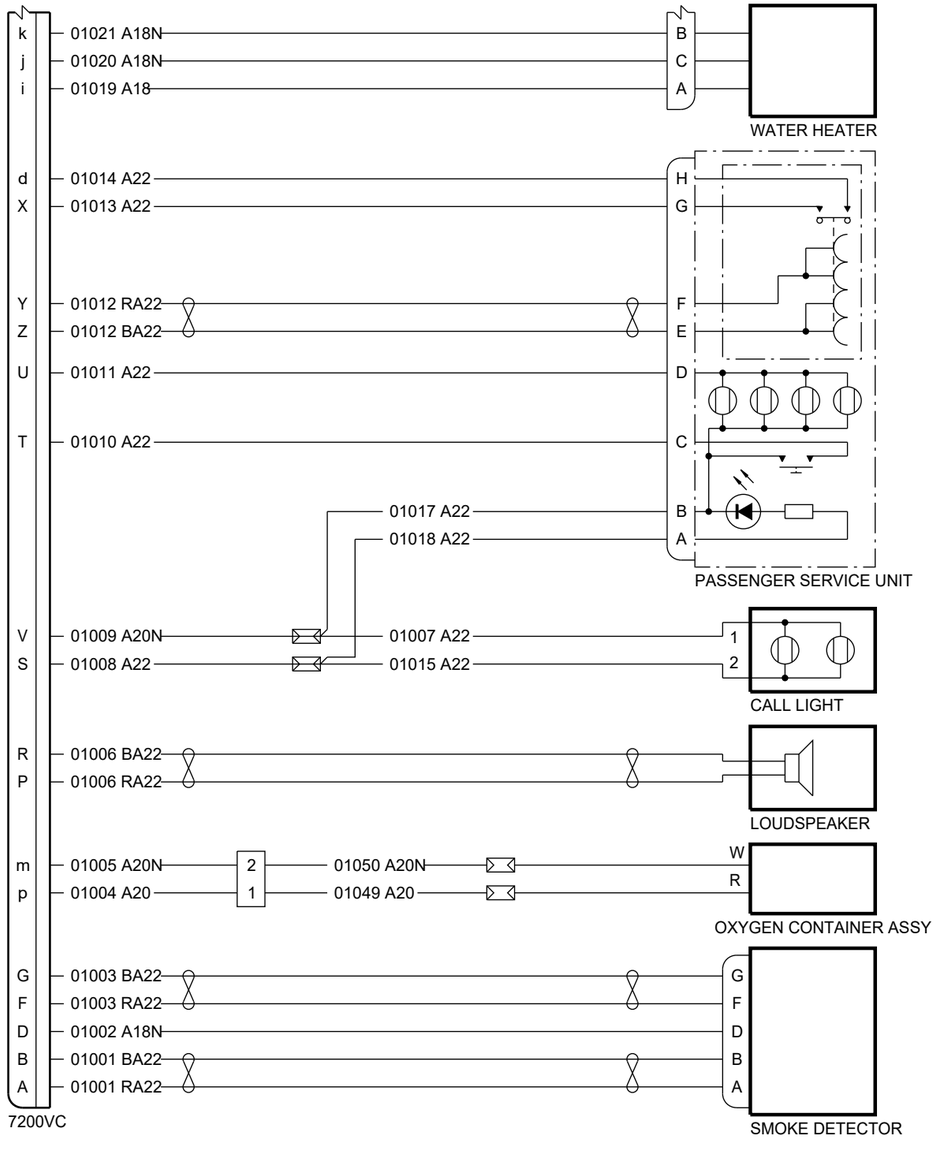

F_CM_254151_1_0050101_01_00

Wiring Diagram Lavatory PN D2549105 Sheet 1 of 3
Figure 2003/EN254151SHEET10050101

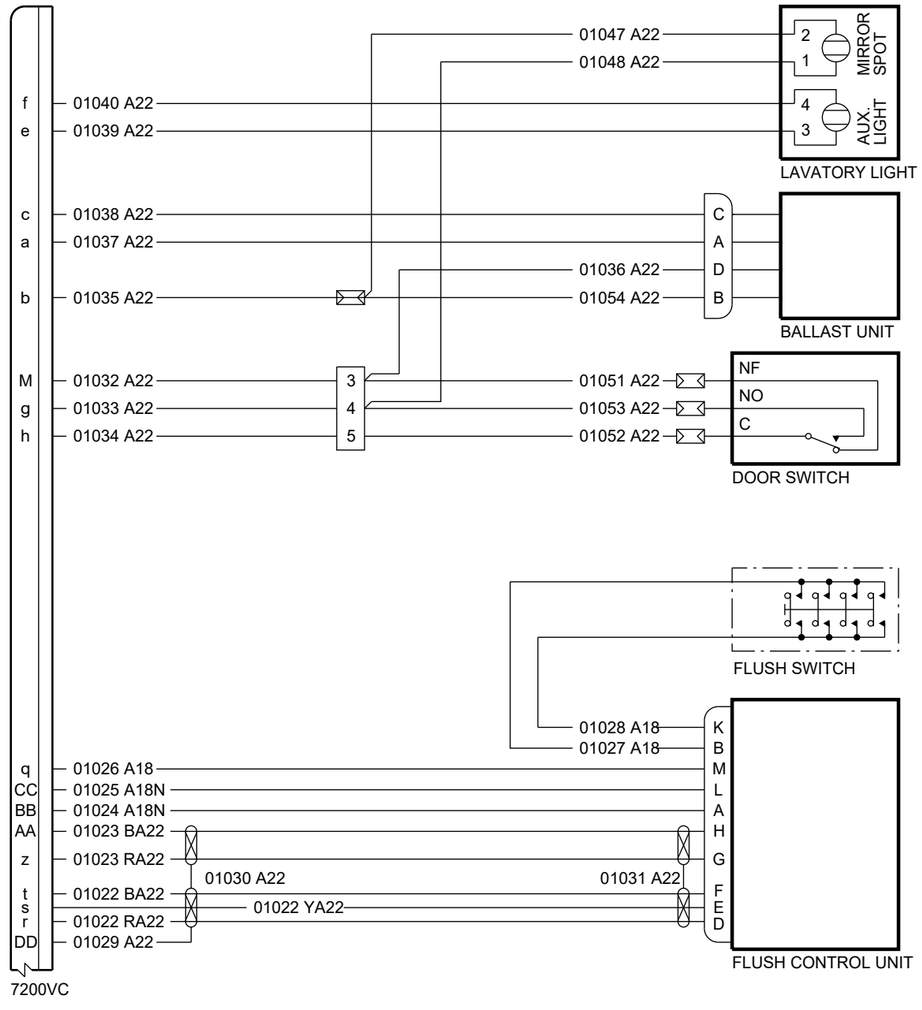

F_CM_254151_1_0050102_01_00

Wiring Diagram Lavatory PN D2549105 Sheet 2 of 3
Figure 2004/EN254151SHEET10050102

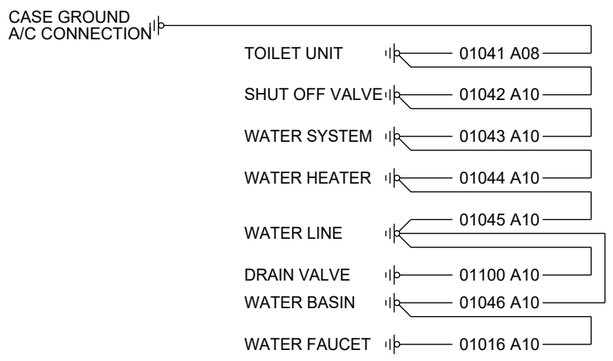

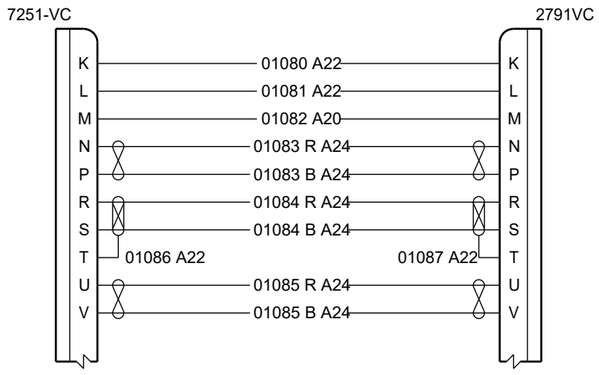

F_CM_254151_1_0050103_01_00

Wiring Diagram Lavatory PN D2549105 Sheet 3 of 3
Figure 2005/EN254151SHEET10050103

TASK 25-41-51-878-805-B01
D2549010500400

2. Wiring Diagrams

A. For the wiring diagram see Figure 2006, Figure 2007, Figure 2008, Figure 2009 and Figure 2010.

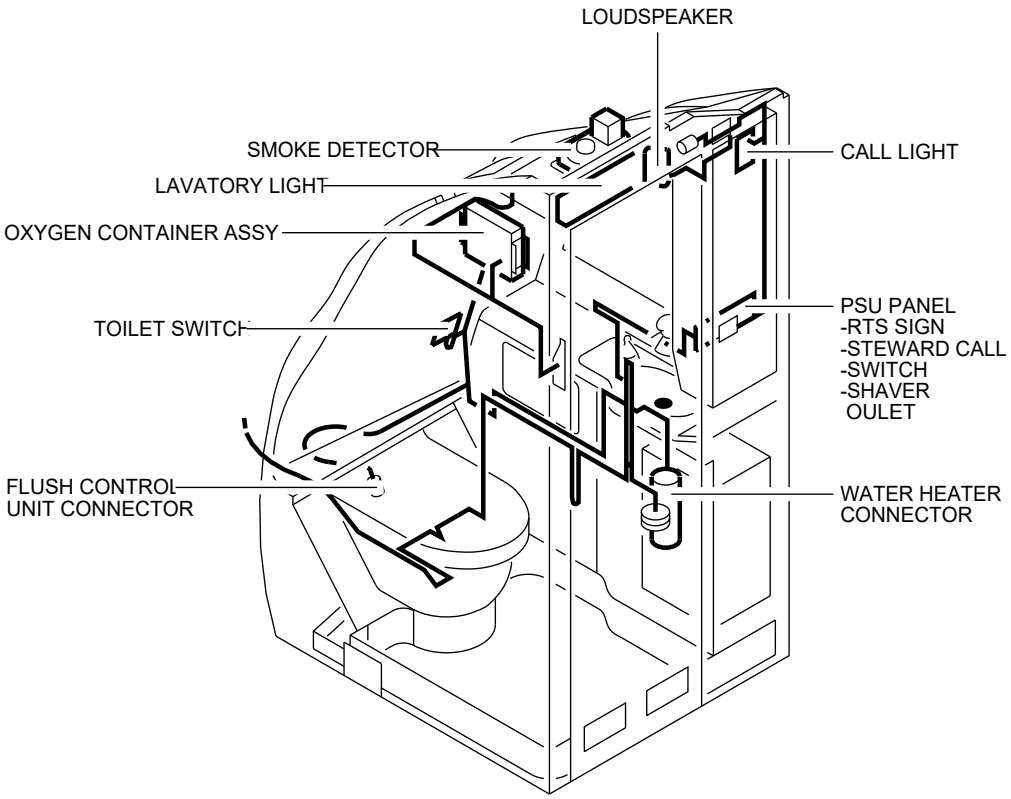

F_CM_254151_1_0060101_01_00

Wiring and Electrical Equipment
Figure 2006/EN254151SHEET10060101

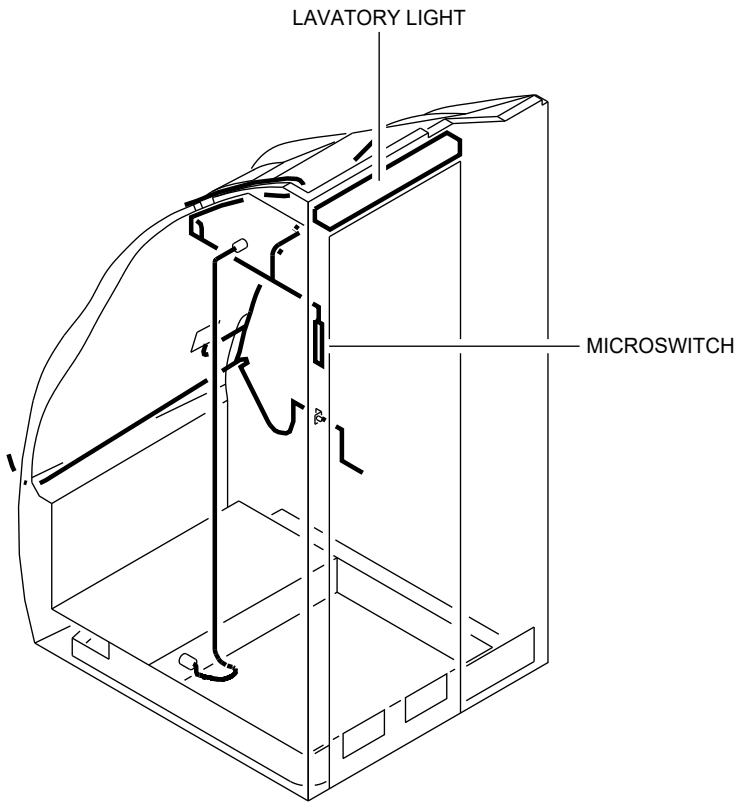

F_CM_254151_1_0070101_01_00

Wiring and Electrical Equipment
Figure 2007/EN254151SHEET10070101

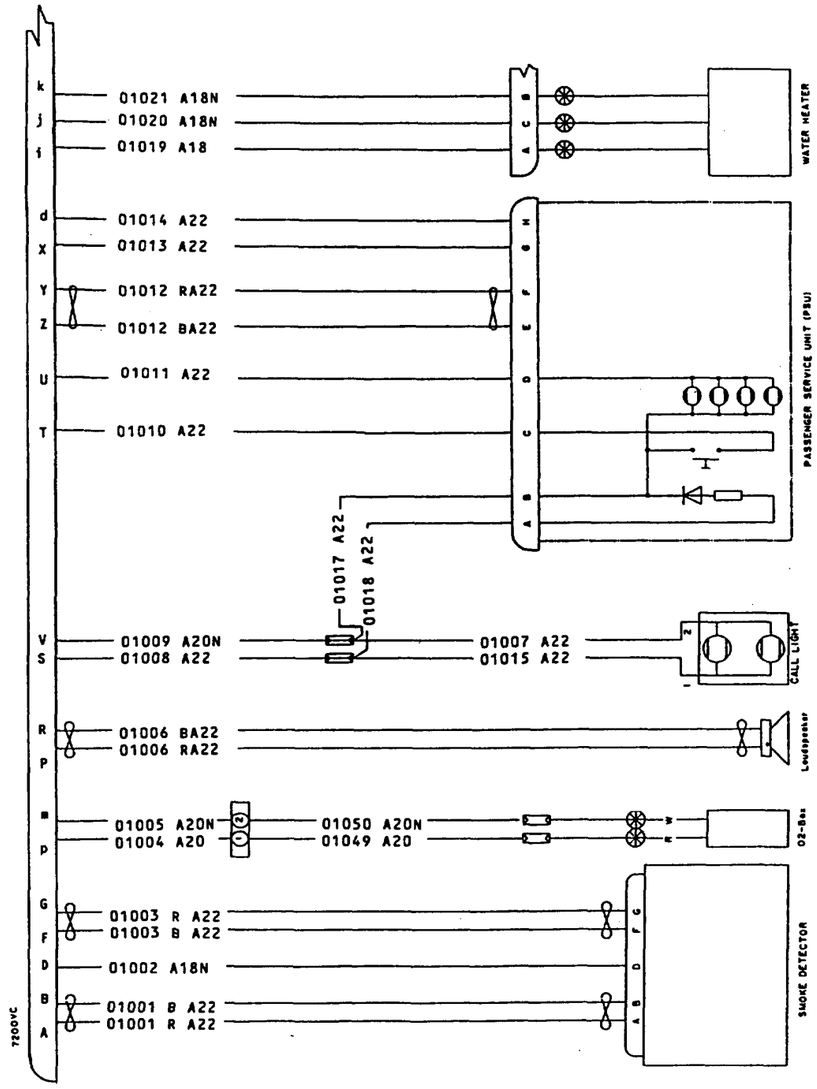

F_CM_254151_1_0080101_01_00

Wiring Diagram Lavatory PN D25490205 Sheet 1 of 3
Figure 2008/EN254151SHEET10080101

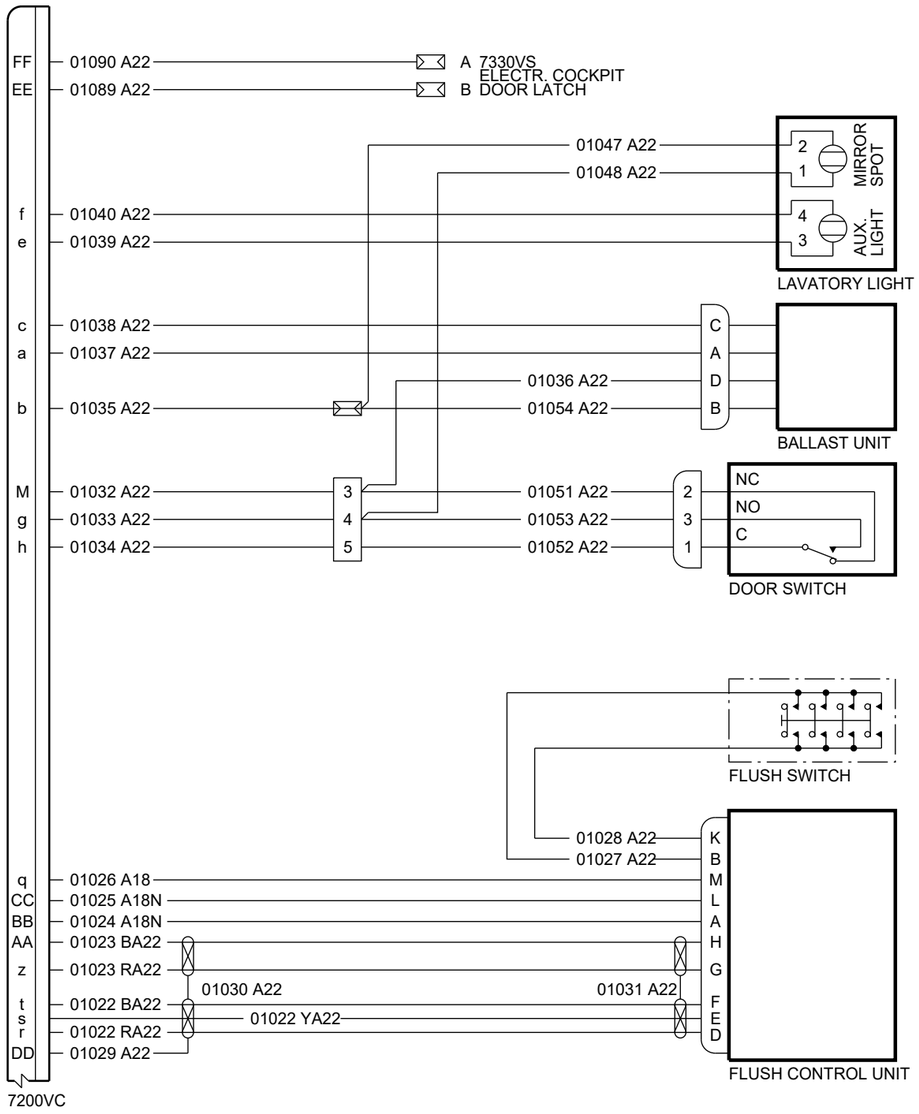

F_CM_254151_1_0080102_01_00

Wiring Diagram Lavatory PN D25490205 Sheet 2 of 3
Figure 2009/EN254151SHEET10080102

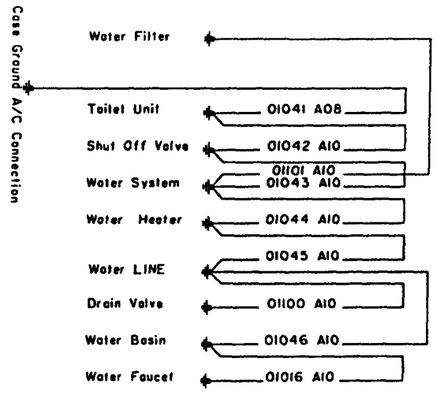

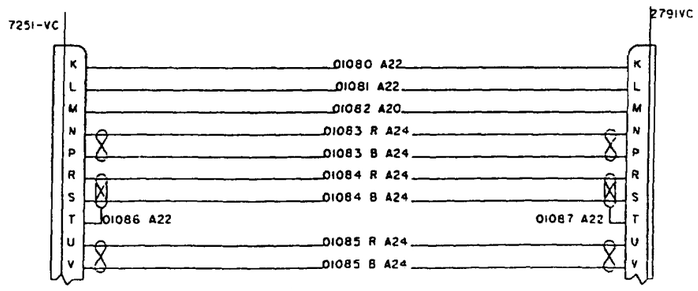

F_CM_254151_1_0080103_01_00

Wiring Diagram Lavatory PN D25490205 Sheet 3 of 3
Figure 2010/EN254151SHEET10080103

TASK 25-41-51-878-805-C01

D2547160900200 D2547160900400 D2549010400000 D2549010400200 D2549010400400
D2549010400600 D2549010400800 D2549010401000 D2549010401400 D2549010401600
D2549010401800 D2549010402000 D2549010402200 D2549010402400 D2549010402600
D2549010402800 D2549010403000 D2549010403400 D2549010403600 D2549010403800
D2549010404000 D2549010404200 D2549010404400 D2549010405000 D2549010405200
D2549010405400 D2549010405600 D2549010405800 D2549010406000 D2549010406200
D2549010406400 D2549010406800 D2549010407000 D2549010500600 D2549010501000
D2549010501200 D2549010501400 D2549010501600 D2549010501800 D2549010502000
D2549010502200 D2549010502400 D2549010502600 D2549010502800 D2549010503200
D2549010503400 D2549010503600 D2549010503800 D2549010504200 D2549010504400
D2549010504600 D2549010504800 D2549010505000 D2549010505200 D2549010505400
D2549010505600 D2549010505800 D2549010506000 D2549010506200 D2549010506400
D2549010506800 D2549010507000 D2549010507200 D2549010507400 D2549010507600
D2549010507800 D2549010508000 D2549010508200 D2549010508400 D2549010508600
D2549010508800 D2549010509000 D2549010509200 D2549010509400 D2549010509600
D2549010509800 D2549010510000 D2549010510200 D2549010510400 D2549010510600
D2549010510800 D2549010511000 D2549010511200 D2549010511400 D2549010511600
D2549010511800 D2549010512000 D2549010512200 D2549010512400 D2549010512600
D2549010513000 D2549010513200 D2549010513400 D2549010513600 D2549010513800
D2549010514000 D2549010514200 D2549010514400 D2549010514600 D2549010600000
D2549010600200 D2549010600400 D2549010600600 D2549010600800 D2549010601000
D2549010601200 D2549010601400 D2549010601600 D2549010601800 D2549010602000
D2549010602200 D2549010602400 D2549010602600 D2549010602800 D2549010603000
D2549010603200 D2549010603400 D2549010603600 D2549010603800 D2549010604000
D2549010604200 D2549010604600 D2549010605000 D2549010605200 D2549010605600
D2549010605800 D2549010606000 D2549010606200 D2549010606600 D2549010606800
D2549010607000 D2549010607200 D2549010607400 D2549010607600 D2549010608200
D2549010608400 D2549010608600 D2549010608800 D2549010609000 D2549010609200
D2549010609600 D2549010609800 D2549010610000 D2549010610200 D2549010610400
D2549010610800 D2549010611000 D2549010611200 D2549010611400 D2549010611600
D2549010611800 D2549010612000 D2549010612200 D2549010612400 D2549010612600
D2549010613000 D2549010613200 D2549010613400 D2549010613600 D2549010613800
D2549010614200 D2549010614400 D2549010614800 D2549020300000 D2549020300400
D2549020300600 D2549020300800 D2549020301000 D2549020301600 D2549020301800
D2549020302000 D2549020302800 D2549020400000 D2549020400200 D2549020400400
D2549020400600 D2549020400800 D2549020401000 D2549020401200 D2549020401400
D2549020402000 D2549020402200 D2549020402400 D2549020402600 D2549020403000
D2549020403200 D2549020403800 D2549020404000 D2549020404200 D2549020404400
D2549020404600 D2549020404800 D2549020405000 D2549020405200 D2549020405400
D2549020405600 D2549020405800 D2549020406000 D2549020406200 D2549020406400
D2549020406600 D2549020406800 D2549020407200 D2549020407400 D2549020407600
D2549020407800 D2549020408000 D2549020408200 D2549020408600 D2549020408800
D2549020409000 D2549020409200 D2549020409400 D2549020409600 D2549020409800
D2549020410200 D2549020410400 D2549020410600 D2549020410800 D2549020411000
D2549020411200 D2549020411400 D2549020411600 D2549020411800 D2549020412000
D2549020412200 D2549020412400 D2549020412600 D2549020413000 D2549020413200

D2549020413400 D2549020413600 D2549020413800 D2549020414000 D2549020414200
D2549020414600 D2549020414800 D2549020500000 D2549020500600 D2549020501000
D2549020501200 D2549020501400 D2549020501600 D2549020502000 D2549020502200
D2549020502400 D2549020502600 D2549020502800 D2549020503000 D2549020503200
D2549020503400 D2549020503600 D2549020503800 D2549020504000 D2549020504200
D2549020504600 D2549020505000 D2549020505200 D2549020505400 D2549020505600
D2549020505800 D2549020506000 D2549020506200 D2549020506400 D2549020506800
D2549020507000 D2549020507200 D2549020507400 D2549020507600 D2549020507800
D2549020508000 D2549020508200 D2549020508400 D2549020508800 D2549020509000
D2549020509200 D2549020509600 D2549020509800 D2549020510000 D2549020510400
D2549020510600 D2549020510800 D2549020511000 D2549020511200 D2549020511600
D2549020512000 D2549020512200 D2549020512400 D2549020512600 D2549020512800
D2549020513000 D2549020513200 D2549020513600 D2549020513800 D2549020514000
D2549020514200 D2549020600000 D2549020600200 D2549020600400 D2549020600800
D2549020601000 D2549020601200 D2549020601400 D2549020601600 D2549020601800
D2549020602000 D2549020602200 D2549020602600 D2549020602800 D2549020603000
D2549020603200 D2549020603400 D2549020603600 D2549020603800 D2549020604000
D2549020604200 D2549020604400 D2549020604600 D2549020604800 D2549020605200
D2549020605400 D2549020605600 D2549020605800 D2549020606000 D2549020606400
D2549020606600 D2549020607200 D2549020607400 D2549020607600 D2549020607800
D2549020608200 D2549020608400 D2549020608800 D2549020609000 D2549020609200
D2549020609400 D2549020609800 D2549020610000 D2549020610200 D2549020610400
D2549020610800 D2549020611200 D2549020611400 D2549020611600 D2549020611800
D2549020612000 D2549020612200 D2549020612400 D2549020612600 D2549020612800
D2549020613000 D2549020613200 D2549020613600 D2549020613800 D2549020614400
D2549020614800 D2549020700000 D2549020700200 D2549020700400 D2549020700600
D2549020700800 D2549020701000 D2549020701200 D2549020701400 D2549020701800
D2549020702000 D2549020702200 D2549020702600 D2549020702800 D2549020703400
D2549020703600 D2549020703800 D2549020704000 D2549020704200 D2549020704400
D2549020704600 D2549020704800 D2549020705000 D2549020705200 D2549020705400
D2549020705600 D2549020705800 D2549020706000 D2549020706200 D2549020706400
D2549020706600 D2549020706800 D2549020707000 D2549020707200 D2549020707400
D2549020707800 D2549020708000 D2549020708200 D2549020708400 D2549020708600
D2549020708800 D2549020709000 D2549020709200 D2549020709400 D2549020709600
D2549020709800 D2549020710000 D2549020710400 D2549020710600 D2549020710800
D2549020711000 D2549020711200 D2549020711400 D2549020711600 D2549020712000
D2549020712200 D2549020712400 D2549020712600 D2549020712800 D2549020713000
D2549020713200 D2549020713400 D2549020713600 D2549020713800 D2549020714000
D2549020714400 D2549020714600 D2549020800000 D2549020800200 D2549020800400
D2549020800600 D2549020800800 D2549020801000 D2549020801200 D2549020801400
D2549020801600 D2549020801800 D2549020802000 D2549020802200 D2549020802400
D2549020802600 D2549020802800 D2549020803000 D2549020803200 D2549020803400
D2549020803600 D2549020803800 D2549020804000 D2549020804200 D2549020804800
D2549020805000 D2549020805200 D2549020805400 D2549020805600 D2549020805800
D2549020806000 D2549020806200 D2549020806400 D2549020806600 D2549020806800
D2549020807000 D2549020807200 D2549020807400 D2549020807600 D2549020807800
D2549020808200 D2549020808400 D2549020808800 D2549020809000 D2549020809400

D2549020809600 D2549020809800 D2549020810000 D2549020810200 D2549020810400
D2549020810600 D2549020811200 D2549020811400 D2549020811600 D2549020811800
D2549020812000 D2549020812200 D2549020812400 D2549020812600 D2549020812800
D2549020813000 D2549020813200 D2549020813400 D2549020813600 D2549020813800
D2549020814000 D2549020814200 D2549020814400 D2549020814600 D2549020814800
D2549030400000 D2549030400200 D2549030400400 D2549030400600 D2549030401000
D2549030401200 D2549030401400 D2549030401600 D2549030401800 D2549030402000
D2549030402200 D2549030402400 D2549030402600 D2549030402800 D2549030403000
D2549030403400 D2549030403600 D2549030403800 D2549030404000 D2549030404200
D2549030404400 D2549030404600 D2549030404800 D2549030405000 D2549030405200
D2549030405400 D2549030405600 D2549030405800 D2549030406000 D2549030406400
D2549030406800 D2549030407000 D2549030407200 D2549030407400 D2549030407600
D2549030407800 D2549030408200 D2549030408400 D2549030408600 D2549030409000
D2549030409200 D2549030409400 D2549030409600 D2549030409800 D2549030410000
D2549030410200 D2549030410600 D2549030410800 D2549030411200 D2549030411600
D2549030411800 D2549030412000 D2549030412200 D2549030412400 D2549030412600
D2549030413000 D2549030413200 D2549030413400 D2549030413600 D2549030414000
D2549030414200 D2549030414400 D2549030414600 D2549030414800 D2549030500200
D2549030500400 D2549030500600 D2549030500800 D2549030501000 D2549030501200
D2549030501400 D2549030501600 D2549030501800 D2549030502000 D2549030502200
D2549030502400 D2549030502800 D2549030503000 D2549030503200 D2549030503400
D2549030503600 D2549030503800 D2549030504000 D2549030504200 D2549030504600
D2549030504800 D2549030505600 D2549030505800 D2549030506200 D2549030506600
D2549030506800 D2549030507000 D2549030507200 D2549030507400 D2549030507600
D2549030507800 D2549030508000 D2549030508200 D2549030508400 D2549030508600
D2549030508800 D2549030509000 D2549030509400 D2549030509600 D2549030509800
D2549030510000 D2549030510200 D2549030510400 D2549030510600 D2549030510800
D2549030511000 D2549030511200 D2549030511400 D2549030511600 D2549030511800
D2549030512000 D2549030512200 D2549030512400 D2549030512800 D2549030513000
D2549030513200 D2549030513400 D2549030513800 D2549030514000 D2549030514200
D2549030514400 D2549030514600 D2549030514800 D2549030600000 D2549030600200
D2549030600400 D2549030600600 D2549030600800 D2549030601000 D2549030601200
D2549030601400 D2549030601800 D2549030602000 D2549030602200 D2549030602400
D2549030602600 D2549030602800 D2549030603000 D2549030603200 D2549030603400
D2549030603600 D2549030603800 D2549030604200 D2549030604400 D2549030604600
D2549030604800 D2549030605000 D2549030605200 D2549030605400 D2549030605600
D2549030605800 D2549030606000 D2549030606200 D2549030606400 D2549030606600
D2549030607000 D2549030607200 D2549030607400 D2549030607600 D2549030607800
D2549030608200 D2549030608400 D2549030608600 D2549030608800 D2549030609000
D2549030609200 D2549030609800 D2549030610000 D2549030610200 D2549030610400
D2549030610600 D2549030611000 D2549030611200 D2549030611400 D2549030611600
D2549030611800 D2549030612000 D2549030612200 D2549030612400 D2549030612600
D2549030612800 D2549030613200 D2549030613400 D2549030613600 D2549030613800
D2549030614000 D2549030614200 D2549030614600 D2549030614800 D2549030700000
D2549030700200 D2549030700400 D2549030700600 D2549030700800 D2549030701000
D2549030701200 D2549030701400 D2549030701600 D2549030701800 D2549030702000
D2549030702200 D2549030702400 D2549030702600 D2549030702800 D2549030703000

D2549030703200 D2549030703400 D2549030703600 D2549030703800 D2549030704000
D2549030704200 D2549030704400 D2549030704600 D2549030704800 D2549030705600
D2549040500200 D2549040500400 D2549040500800 D2549040501000 D2549040501200
D2549040501400 D2549040501600 R225401107-000 R225401107-002 R225401107-004
R225401115-000 R225401128-000 R225401133-000 R225401134-000 R225401134-002
R225401134-004 R225401134-006 R225401134-008 R225401134-010 R225401134-012
R225401134-014 R225401134-016 R225401134-018 R225401134-020 R225401134-022
R225401134-024 R225401134-026 R225401134-028 R225401134-030 R225401134-032
R225401134-034 R225401134-036 R225401134-038 R225401136-000 R225401136-004
R225401136-006 R225401136-008 R225401136-010 R225401136-012 R225401136-014
R225401142-000 R225401142-002 R225401145-000 R225401145-002 R225401145-004
R225401145-006 R225401145-010 R225401146-000 R225401146-002 R225401152-000
R225401152-002 R225401152-004 R225401152-006 R225401152-008 R225401152-010
R225401168-000 R225401168-002 R225401168-004 R225401168-006 R225401168-008
R225401168-010 R225401168-012 R225401168-016 R225401168-018 R225401168-020
R225401168-022 R225401168-024 R225401168-026 R225401172-000 R225401172-002
R225401172-004 R225401172-006 R225401172-008 R225401172-010 R225401172-012
R225401172-014 R225401172-016 R225401172-018 R225401175-000 R225401175-002
R225401188-000 R225401188-002 R225401188-004 R225401192-000 R225401192-002
R225401195-000 R225401196-034 R225401196-036 R225401196-038 R225401196-040
R225401199-000 R225401199-002 R225401199-004 R225401199-006 R225401199-008
R225401199-010 R225401199-012 R225401600-000 R225401600-002 R225401600-004
R225401605-000 R225401609-000 R225401611-000 R225401611-006 R225401611-008
R225401611-010 R225401611-012 R225401611-014 R225401611-016 R225401611-018
R225401611-020 R225401613-000 R225401618-000 R225401622-000 R225401622-002
R225401627-000 R225401627-002 R225401627-004 R225401629-000 R225401629-002
R225401639-000 R225401639-002 R225401643-000 R225401643-002 R225401643-004
R225401646-000 R225401646-002 R225401647-000 R225401648-000 R225401648-002
R225401648-004 R225401648-006 R225401649-000 R225401656-000 R225401656-002
R225401671-000 R225401671-002 R225401673-000 R225401673-002 R225401673-004
R225401673-006 R225401675-000 R225401676-000 R225401683-000 R225401688-000
R225401691-000 R225401691-002 R225401693-000 R225401697-000 R225401697-002
R225401808-000 R225401814-000 R225401196-048 R225401196-050 R225401196-052
R225401196-054 R225401196-056 R225401196-058 R225401196-060 R225401196-062
R225401196-064 R225401196-066 R225401196-068 R225401196-070 R225401196-046

3. Wiring Diagrams

A. TBD.

TASK 25-41-51-878-805-D01
D2549020514800

4. Wiring Diagrams

A. For the wiring diagram see Figure 2011.

THIS PAGE IS INTENTIONALLY LEFT BLANK

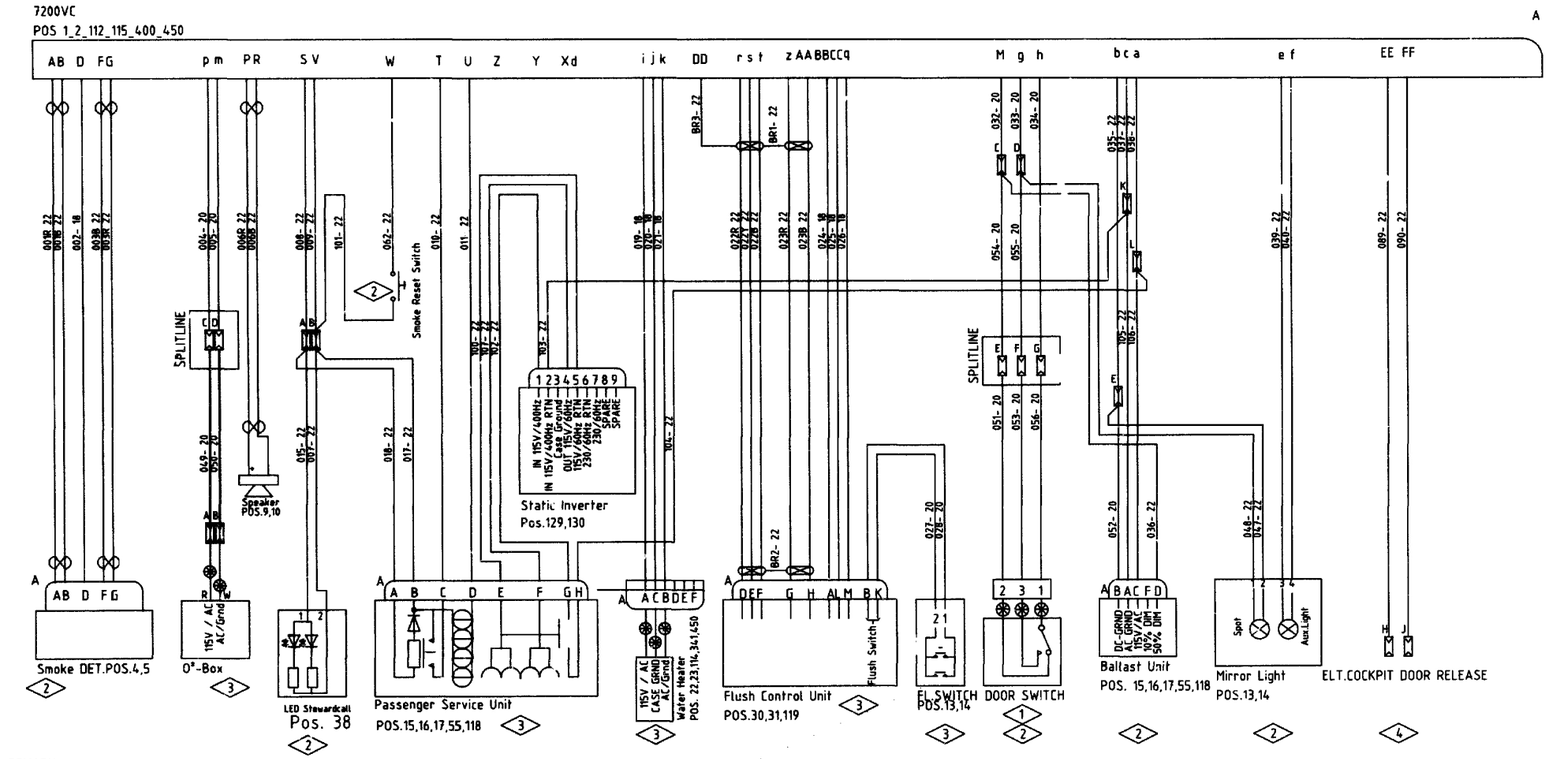

REMARK:
KABEL MIT DER KENNZEICHNUNG BR...WERDEN NICHT GEKENNZEICHNET.
CABLE WITH IDENTIFIER BR...WILL NOT BE MARKED.
ALLE KABEL SIND VOR DER ZÄHLNUMMER MIT "1 ZU KENNZEICHNEN.
ALL CABLE ARE MARKED WITH 01.
EXAMPLE: 01 001R 20

<1> BEI MODULMONTAGE ANGESCHLOSSEN
INSTALLED ON MODULASSEMBLY

<2> SIEHE ELT.ZUSAMMENBAU A2 929 01155
SEE ELT.ASSEMBLY A2 929 01155

<3> PN.SIEHE MECH.STUECKLISTE
PN.SEE MECH EQUIPMENTLIST

<4> KENNZEICHNUNG 7330VS A+B
MARKED WITH 7330VS A+B

, = POS.7 JIFFY JUNCTION

, = POS.11 SPLICE

TASK 25-41-51-878-805-E01
D2549020701600

5. Wiring Diagrams

A. For the wiring diagram see Figure 2012.

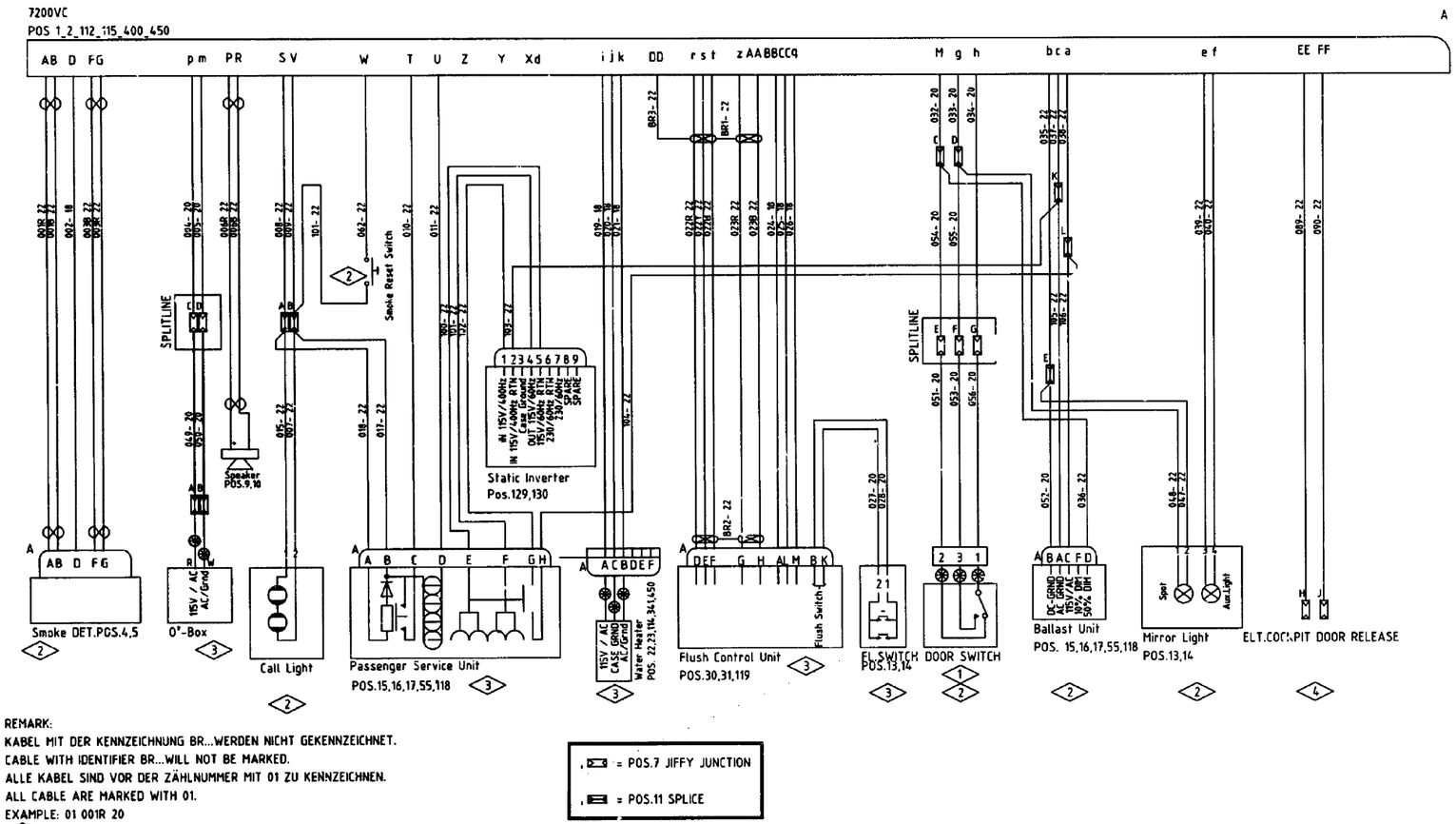

REMARK:
KABEL MIT DER KENNZEICHNUNG BR...WERDEN NICHT GEKENNZEICHNET.
CABLE WITH IDENTIFIER BR...WILL NOT BE MARKED.
ALLE KABEL SIND VOR DER ZÄHLNUMMER MIT 01 ZU KENNZEICHNEN.
ALL CABLE ARE MARKED WITH 01.
EXAMPLE: 01 001R 20

1. BEI MODULMONTAGE ANGESCHLOSSEN
   INSTALLED ON MODULASSEMBLY
2. SIEHE ELT.ZUSAMMENBAU A2 929 01150
   SEE ELT.ASSEMBLY A2 929 01150
3. PN.SIEHE MECH.STUECKLISTE
   PN.SEE MECH EQUIPMENTLIST
4. KENNZEICHNUNG 7330VS A+B
   MARKED WITH 7330VS A+B

= POS.7 JIFFY JUNCTION
= POS.11 SPLICE

TASK 25-41-51-878-805-F01
D2549020403400 D2549020403600 D2549020407000 D2549020804400 D2549030411400 R225401136-024 R225401196-042 R225401602-000 R225401643-006 R225401643-008 R225401648-008

6. Wiring Diagrams

A. For the wiring diagram see Figure 2013 and Figure 2014.

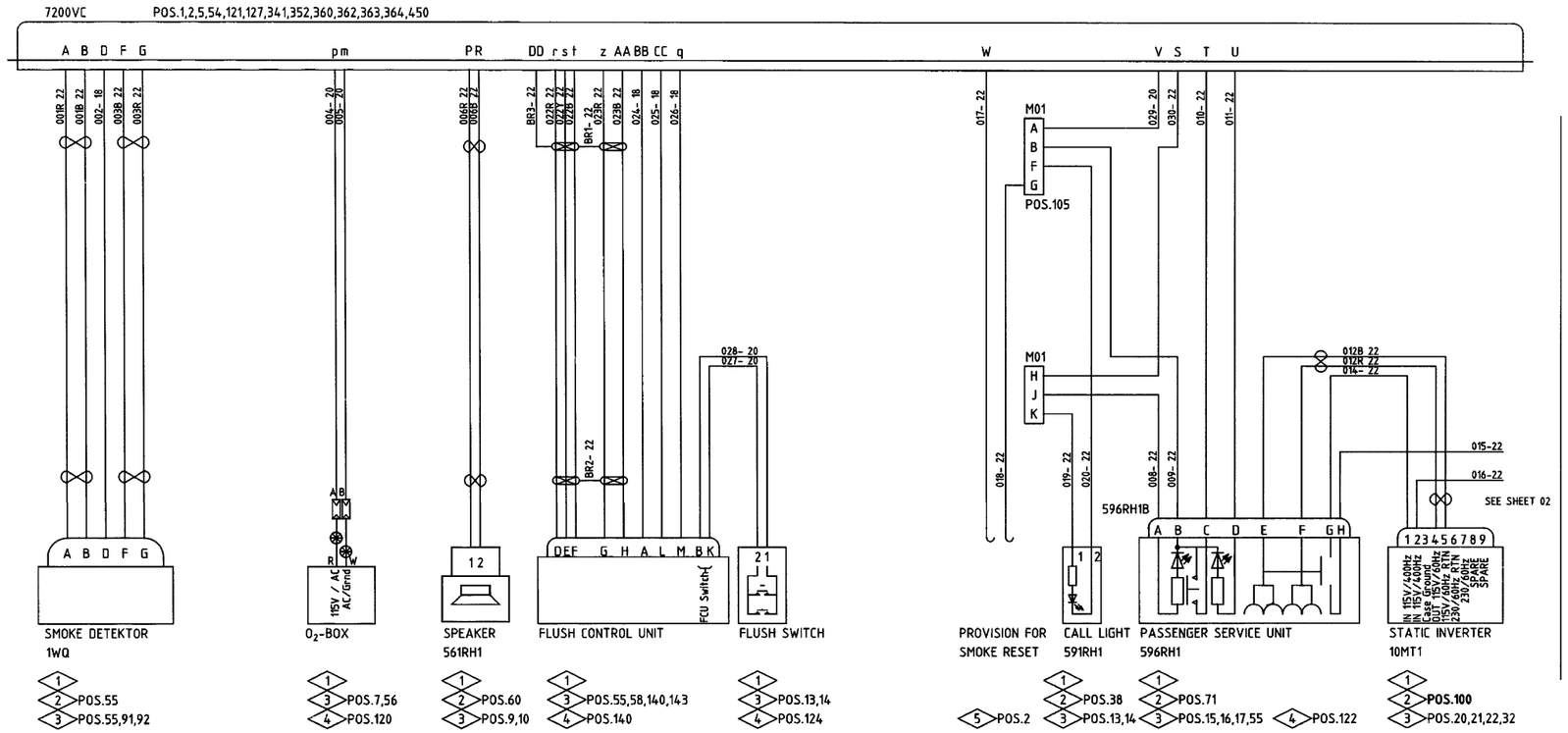

REMARK:

KABEL MIT DER KENNZEICHNUNG BR...WERDEN NICHT GEKENNZEICHNET.
CABLE WITH IDENTIFIER BR...WILL NOT BE MARKED.

ALLE KABEL SIND VOR DER ZÄHLNUMMER MIT 01 ZU KENNZEICHNEN.
ALL CABLE ARE MARKED WITH 01.
EXAMPLE: 01 001R 20

1. BEI MODULMONTAGE ANGESCHLOSSEN
   INSTALLED ON MODULASSEMBLY
2. P.N. SIEHE ELTR. ZUSAMMENBAU A2 929 01159
   P.N. SEE ELT. ASSEMBLY A2 929 01159
3. P.N. SIEHE ELT. ZUSAMMENBAU A2 929 01308
   P.N. SEE ELT. ASSEMBLY A2 929 01308
4. P.N. SIEHE MECH. ZUSAMMENBAU A2 254 01..
   SEE MECH. ASSEMBLY A2 254 01..
5. P.N. SIEHE ELT. ZUSAMMENBAU A2 929 01309
   P.N. SEE ELT. ASSEMBLY A2 929 01309

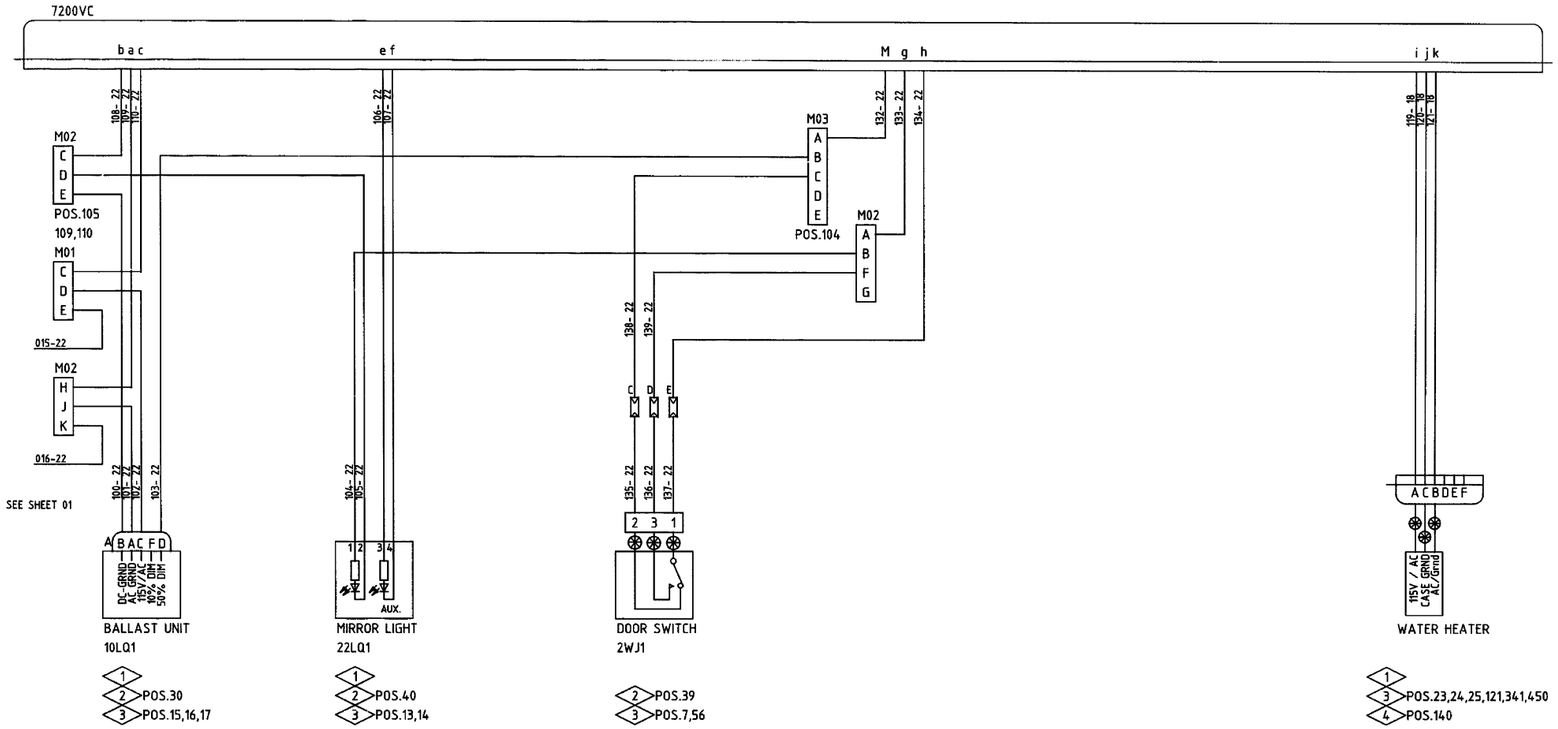

REMARK:

KABEL MIT DER KENNZEICHNUNG BR...WERDEN NICHT GEKENNZEICHNET.
CABLE WITH IDENTIFIER BR...WILL NOT BE MARKED.

ALLE KABEL SIND VOR DER ZÄHLNUMMER MIT 01 ZU KENNZEICHNEN.
ALL CABLE ARE MARKED WITH 01.
EXAMPLE: 01 001R 20

1. BEI MODULMONTAGE ANGESCHLOSSEN
   INSTALLED ON MODULASSEMBLY
2. P.N. SIEHE ELTR. ZUSAMMENBAU A2 929 01159
   P.N. SEE ELT. ASSEMBLY A2 929 01159
3. P.N. SIEHE ELT. ZUSAMMENBAU A2 929 01308
   P.N. SEE ELT. ASSEMBLY A2 929 01308
4. P.N. SIEHE MECH. ZUSAMMENBAU A2 254 01..
   SEE MECH. ASSEMBLY A2 254 01..
5. P.N. SIEHE ELT. ZUSAMMENBAU A2 929 01309
   P.N. SEE ELT. ASSEMBLY A2 929 01309

TASK 25-41-51-878-805-G01
D2549020810800

7. Wiring Diagrams

A. For the wiring diagram see Figure 2015.

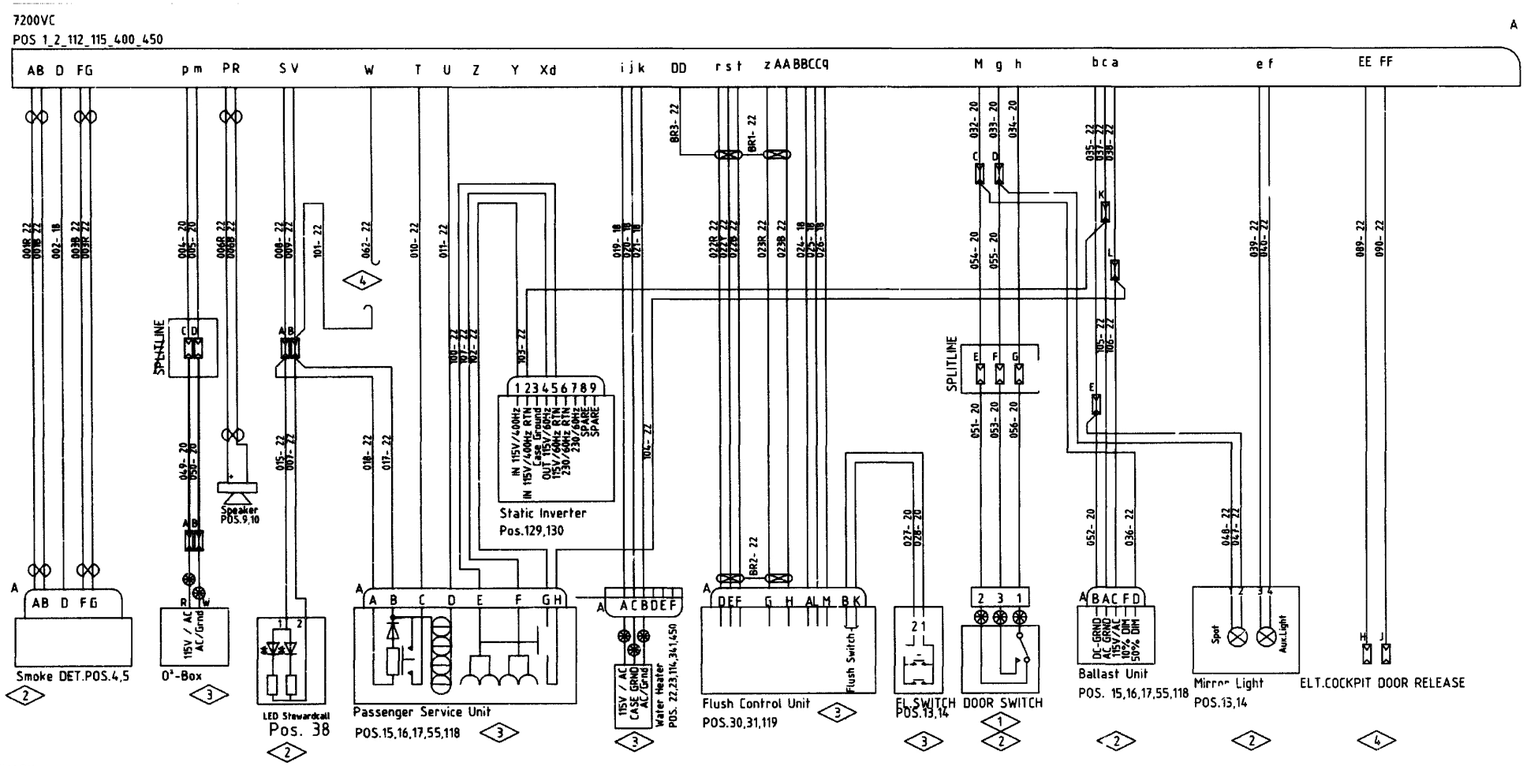

REMARK:
KABEL MIT DER KENNZEICHNUNG BR...WERDEN NICHT GEKENNZEICHNET.
CABLE WITH IDENTIFIER BR...WILL NOT BE MARKED.
ALLE KABEL SIND VOR DER ZÄHLNUMMER MIT 01 ZU KENNZEICHNEN
ALL CABLE ARE MARKED WITH 01.
EXAMPLE: 01 001R 20

1 BEI MODULMONTAGE ANGESCHLOSSEN
INSTALLED ON MODULASSEMBLY

2 SIEHE ELT.ZUSAMMENBAU A2 929 01155
SEE ELT.ASSEMBLY A2 929 01155

3 PN.SIEHE MECH.STUECKLISTE
PN.SEE MECH EQUIPMENTLIST

4 KENNZEICHNUNG 7330VS A*B
MARKED WITH 7330VS A*B

= POS.7 JIFFY JUNCTION

= POS.11 SPLICE

ELECTRICAL HARNESS A2 929 01305 s01iA

f_cm_254151_1_0510101_01_00

Figure 2015/EN254151SHEET10510101

TASK 25-41-51-878-805-H01
D2549020506600 D2549020606800 D2549020608600 D2549020609600 D2549020614000 D2549020614600

8. Wiring Diagrams

A. For the wiring diagram see Figure 2016.

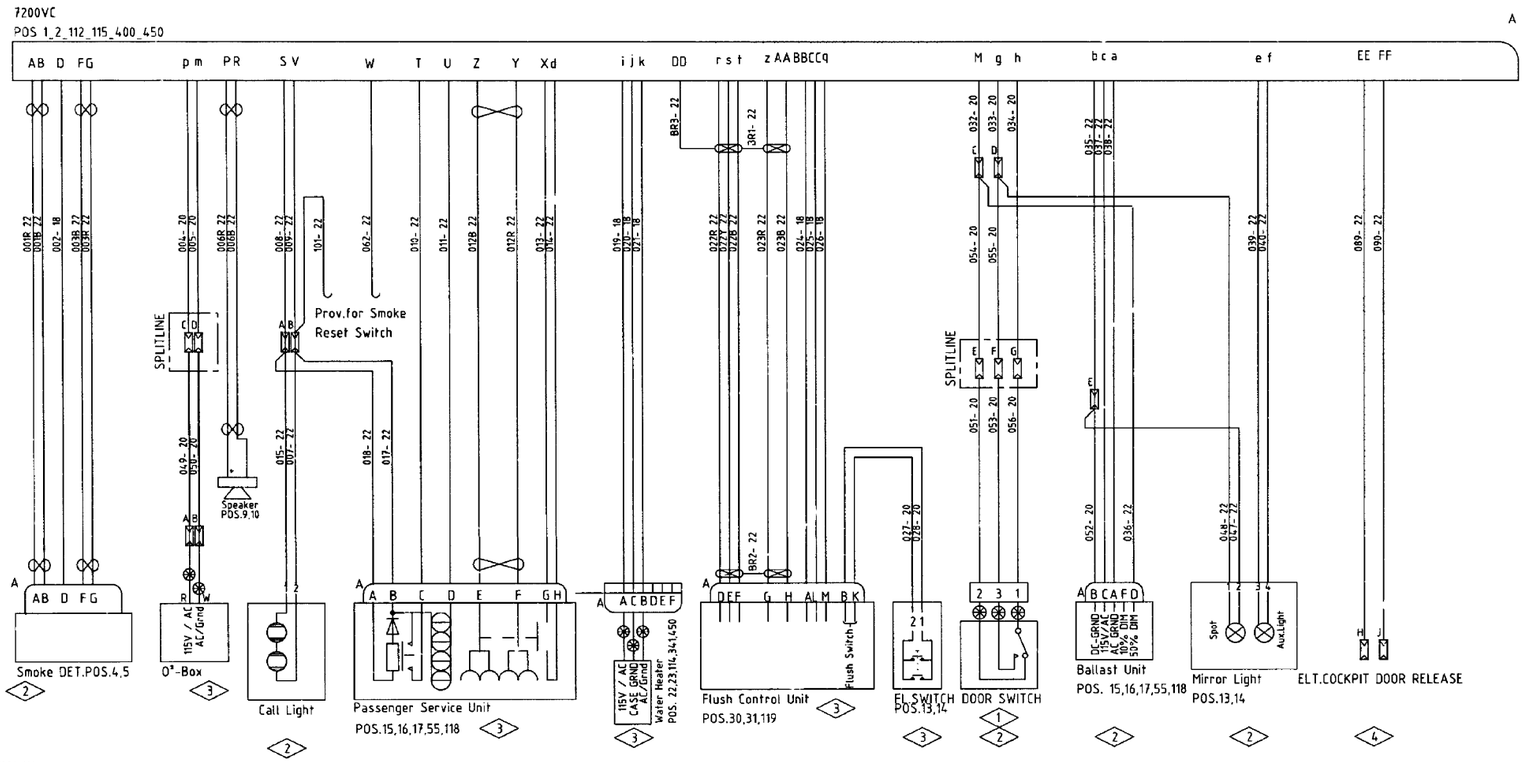

REMARK:
KABEL MIT DER KENNZEICHNUNG BR...WERDEN NICHT GEKENNZEICHNET.
CABLE WITH IDENTIFIER BR...WILL NOT BE MARKED.
ALLE KABEL SIND VOR DER ZÄHLNUMMER MIT 01 ZU KENNZEICHNEN.
ALL CABLE ARE MARKED WITH 01.
EXAMPLE: 01 001R 20

1 BEI MODULMONTAGE ANGESCHLOSSEN
INSTALLED ON MODULASSEMBLY

2 SIEHE ELT.ZUSAMMENBAU A2 929 01150
SEE ELT.ASSEMBLY A2 929 01150

3 PN.SIEHE MECH.STUECKLISTE
PN.SEE MECH EQUIPMENTLIST

4 KENNZEICHNUNG 7330VS A+B
MARKED WITH 7330VS A+B

REMARK: ALL POSITION <500 ARE SHOWN IN A2 929 01300

= POS.7 JIFFY JUNCTION

= POS.11 SPLICE

TASK 25-41-51-878-805-J01
D2549020602400 R225401139-000

9. Wiring Diagrams

A. For the wiring diagram see Figure 2017.

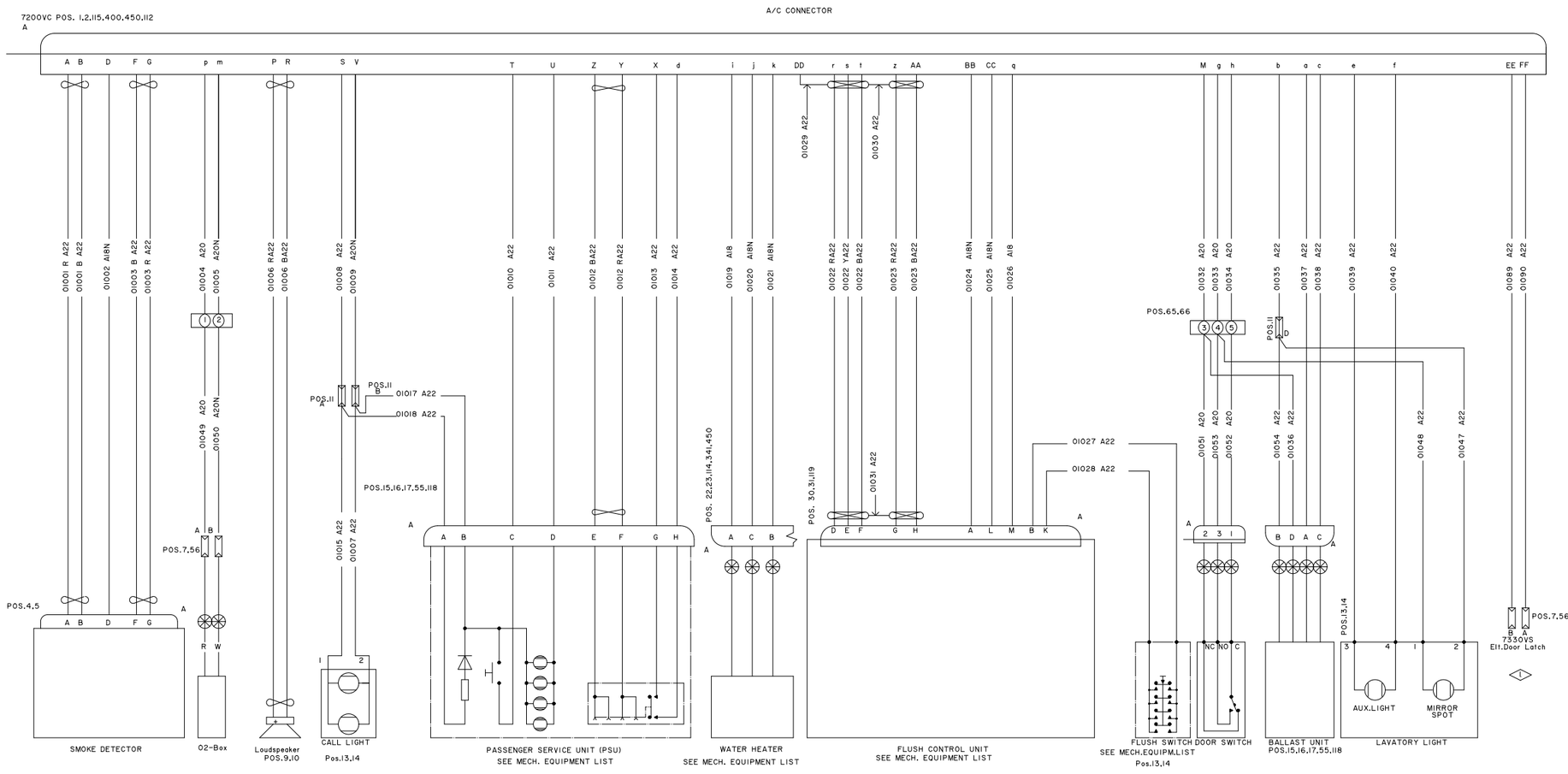

1 OPTIONAL, WENN NICHT EINGEBAUT AUF STOW LEGEN

OPTIONAL, WHEN NOT INSTALLED WIRES ON STOW

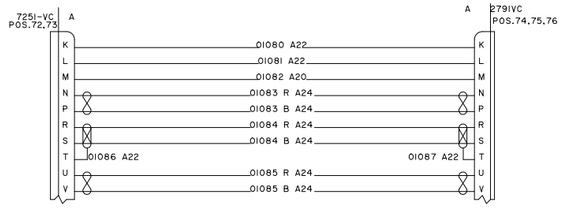

ELECTRICAL HARNESS

A2 929 01201 s02iC

f_cm_254151_1_0530101_01_00

Figure 2017/EN254151SHEET10530101

TASK 25-41-51-878-805-K01
D2549010403200 D2549010404600 D2549010404800 D2549010610600 D2549020412800
R225401183-004 R225401183-006 R225401685-000 R225401685-002 R225401811-000

10. Wiring Diagrams

A. For the wiring diagram see Figure 2018 and Figure 2019.

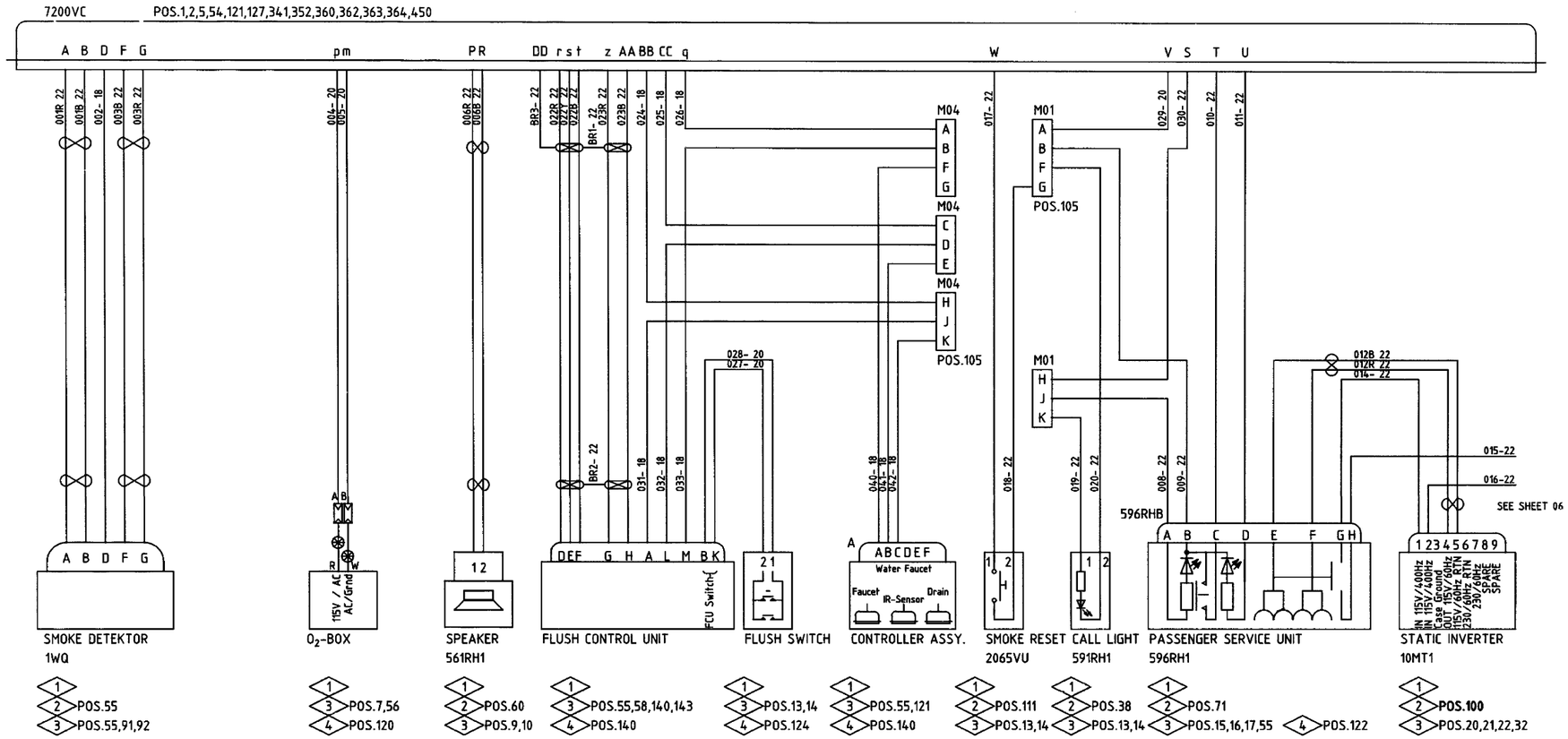

REMARK:

KABEL MIT DER KENNZEICHNUNG BR...WERDEN NICHT GEKENNZEICHNET.
CABLE WITH IDENTIFIER BR...WILL NOT BE MARKED.

ALLE KABEL SIND VOR DER ZÄHLNUMMER MIT 01 ZU KENNZEICHNEN.
ALL CABLE ARE MARKED WITH 01.
EXAMPLE: 01 001R 20

1. BEI MODULMONTAGE ANGESCHLOSSEN
   INSTALLED ON MODULASSEMBLY
2. P.N. SIEHE ELTR. ZUSAMMENBAU A2 929 01159
   P.N. SEE ELT. ASSEMBLY A2 929 01159
3. P.N. SIEHE ELT. ZUSAMMENBAU A2 929 01308
   P.N. SEE ELT. ASSEMBLY A2 929 01308
4. P.N. SIEHE MECH. ZUSAMMENBAU A2 254 01..
   SEE MECH. ASSEMBLY A2 254 01..
5. P.N. SIEHE ELT. ZUSAMMENBAU A2 929 01309
   P.N. SEE ELT. ASSEMBLY A2 929 01309

CABLE LOOM A2 929 01309 s05iB F_CM_254151_1_0540101_01_00

Figure 2018/EN254151SHEET10540101

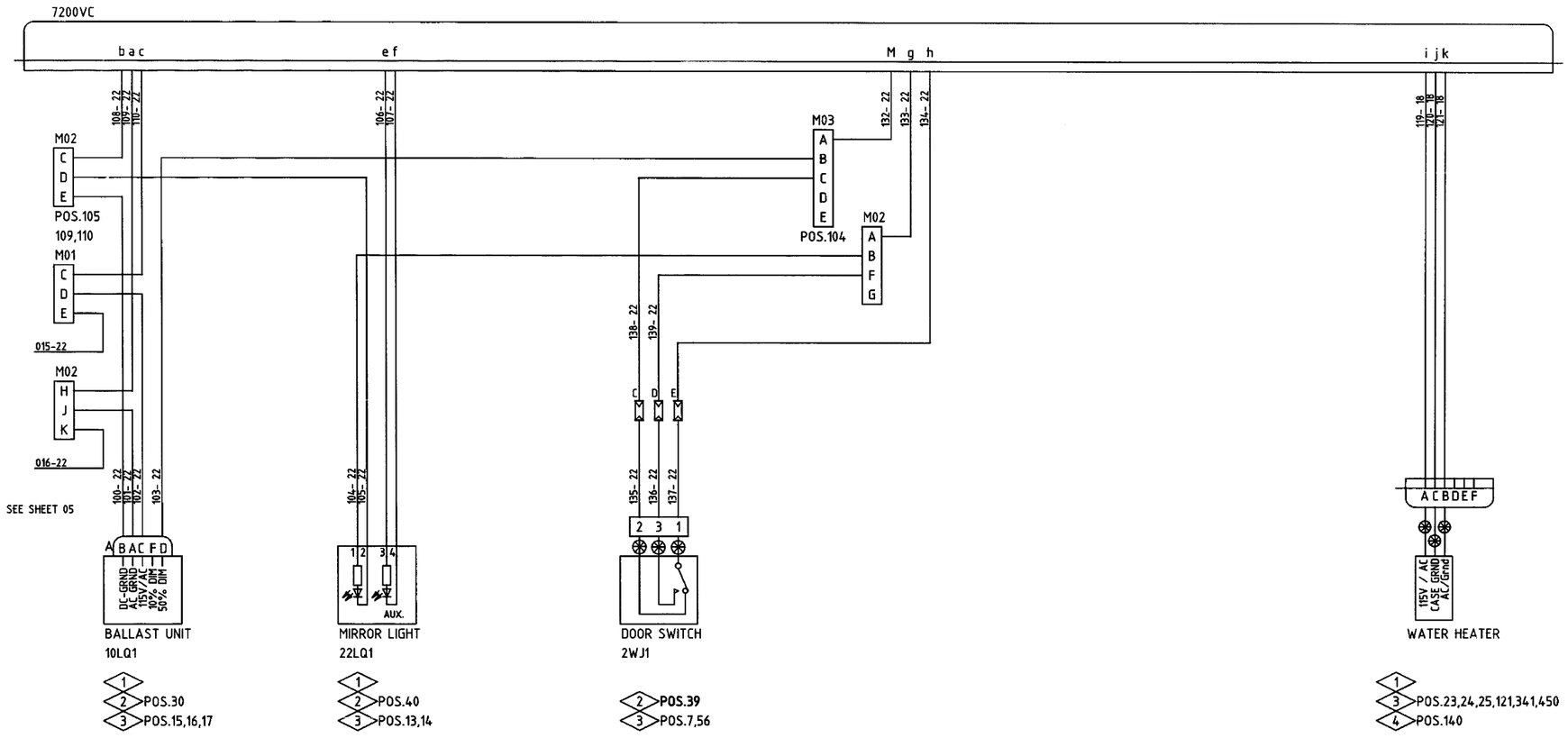

REMARK:

KABEL MIT DER KENNZEICHNUNG BR...WERDEN NICHT GEKENNZEICHNET.
CABLE WITH IDENTIFIER BR...WILL NOT BE MARKED.

ALLE KABEL SIND VOR DER ZÄHLNUMMER MIT 01 ZU KENNZEICHNEN.
ALL CABLE ARE MARKED WITH 01.
EXAMPLE: 01 001R 20

1 BEI MODULMONTAGE ANGESCHLOSSEN
INSTALLED ON MODULASSEMBLY

2 P.N. SIEHE ELTR. ZUSAMMENBAU A2 929 01159
P.N. SEE ELT. ASSEMBLY A2 929 01159

3 P.N. SIEHE ELT. ZUSAMMENBAU A2 929 01308
P.N. SEE ELT. ASSEMBLY A2 929 01308

4 P.N. SIEHE MECH. ZUSAMMENBAU A2 254 01..
SEE MECH. ASSEMBLY A2 254 01..

CABLE LOOM A2 929 01309 s06iB F_CM_254151_1_0540101_02_00

Figure 2019/EN254151SHEET10540102

TASK 25-41-51-878-805-L01
D2549020401600 R225401624-000

11. Wiring Diagrams

A. For the wiring diagram see Figure 2020 and Figure 2021.

THIS PAGE IS INTENTIONALLY LEFT BLANK

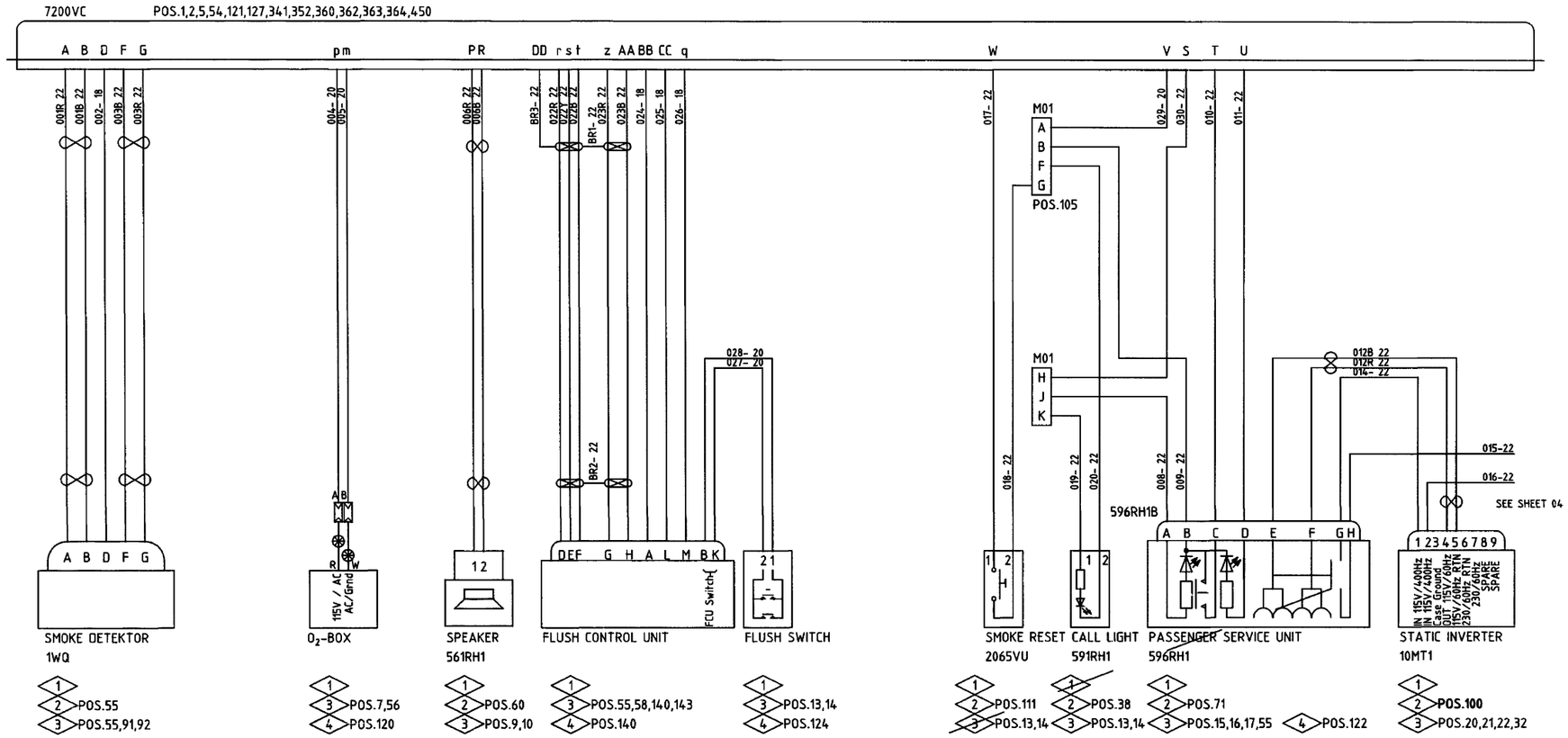

REMARK:

KABEL MIT DER KENNZEICHNUNG BR...WERDEN NICHT GEKENNZEICHNET
CABLE WITH IDENTIFIER BR...WILL NOT BE MARKED.

ALLE KABEL SIND VOR DER ZÄHLNUMMER MIT 01 ZU KENNZEICHNEN.
ALL CABLE ARE MARKED WITH 01.
EXAMPLE: 01 001R 20

1. BEI MODULMONTAGE ANGESCHLOSSEN
   INSTALLED ON MODULASSEMBLY
2. P.N. SIEHE ELTR. ZUSAMMENBAU A2 929 01159
   P.N. SEE ELT. ASSEMBLY A2 929 01159
3. P.N. SIEHE ELT. ZUSAMMENBAU A2 929 01308
   P.N. SEE ELT. ASSEMBLY A2 929 01308
4. P.N. SIEHE MECH. ZUSAMMENBAU A2 254 01..
   SEE MECH. ASSEMBLY A2 254 01..
5. P.N. SIEHE ELT. ZUSAMMENBAU A2 929 01309
   P.N. SEE ELT. ASSEMBLY A2 929 01309

CABLE LOOM A2 929 01309 s03iB F_CM_254151_1_0550101_01_00

Figure 2020/EN254151SHEET10550101

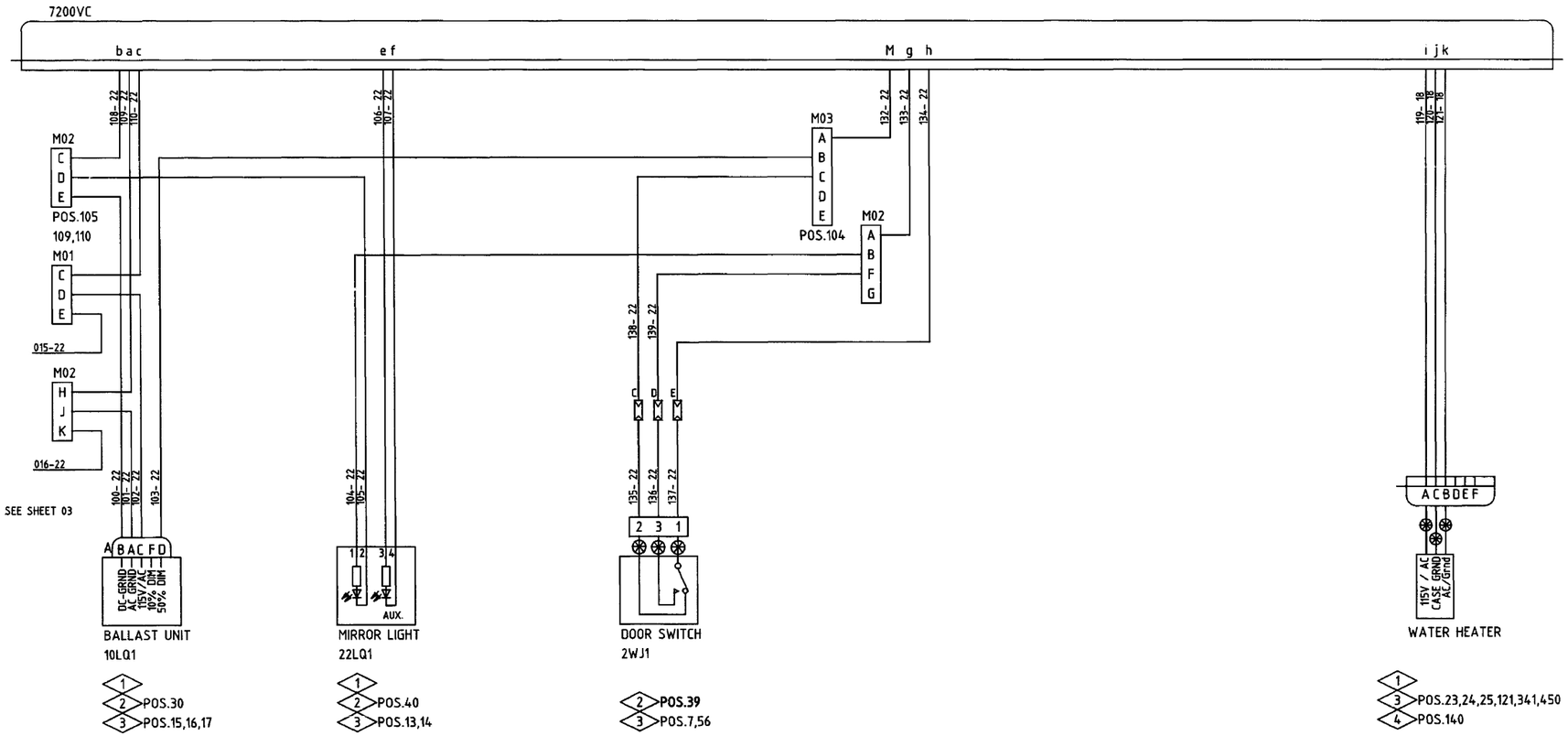

REMARK:

KABEL MIT DER KENNZEICHNUNG BR...WERDEN NICHT GEKENNZEICHNET.
CABLE WITH IDENTIFIER BR...WILL NOT BE MARKED.

ALLE KABEL SIND VOR DER ZÄHLNUMMER MIT 01 ZU KENNZEICHNEN.
ALL CABLE ARE MARKED WITH 01.
EXAMPLE: 01 001R 20

1. BEI MODULMONTAGE ANGESCHLOSSEN
   INSTALLED ON MODULASSEMBLY
2. P.N. SIEHE ELTR. ZUSAMMENBAU A2 929 01159
   P.N. SEE ELT. ASSEMBLY A2 929 01159
3. P.N. SIEHE ELT. ZUSAMMENBAU A2 929 01308
   P.N. SEE ELT. ASSEMBLY A2 929 01308
4. P.N. SIEHE MECH. ZUSAMMENBAU A2 254 01..
   SEE MECH. ASSEMBLY A2 254 01..
5. P.N. SIEHE ELT. ZUSAMMENBAU A2 929 01309
   P.N. SEE ELT. ASSEMBLY A2 929 01309

TASK 25-41-51-878-805-N01

D2549010514800 D2549010604400 D2549020605000 D2549020607000 D2549020610600 D2549020611000 D2549020702400 D2549020703200 D2549020707600 D2549020710200 D2549030502600 D2549030505200 D2549030506000 D2549030506400 D2549030509200 D2549030513600 R225401136-016 R225401136-020 R225401137-000 R225401137-002 R225401137-004 R225401137-006 R225401137-008 R225401137-010 R225401137-012 R225401137-014 R225401145-012 R225401153-000 R225401159-000 R225401160-000 R225401160-002 R225401176-000 R225401188-006

12. Wiring Diagrams

A. For the wiring diagram see Figure 2022.

THIS PAGE IS INTENTIONALLY LEFT BLANK

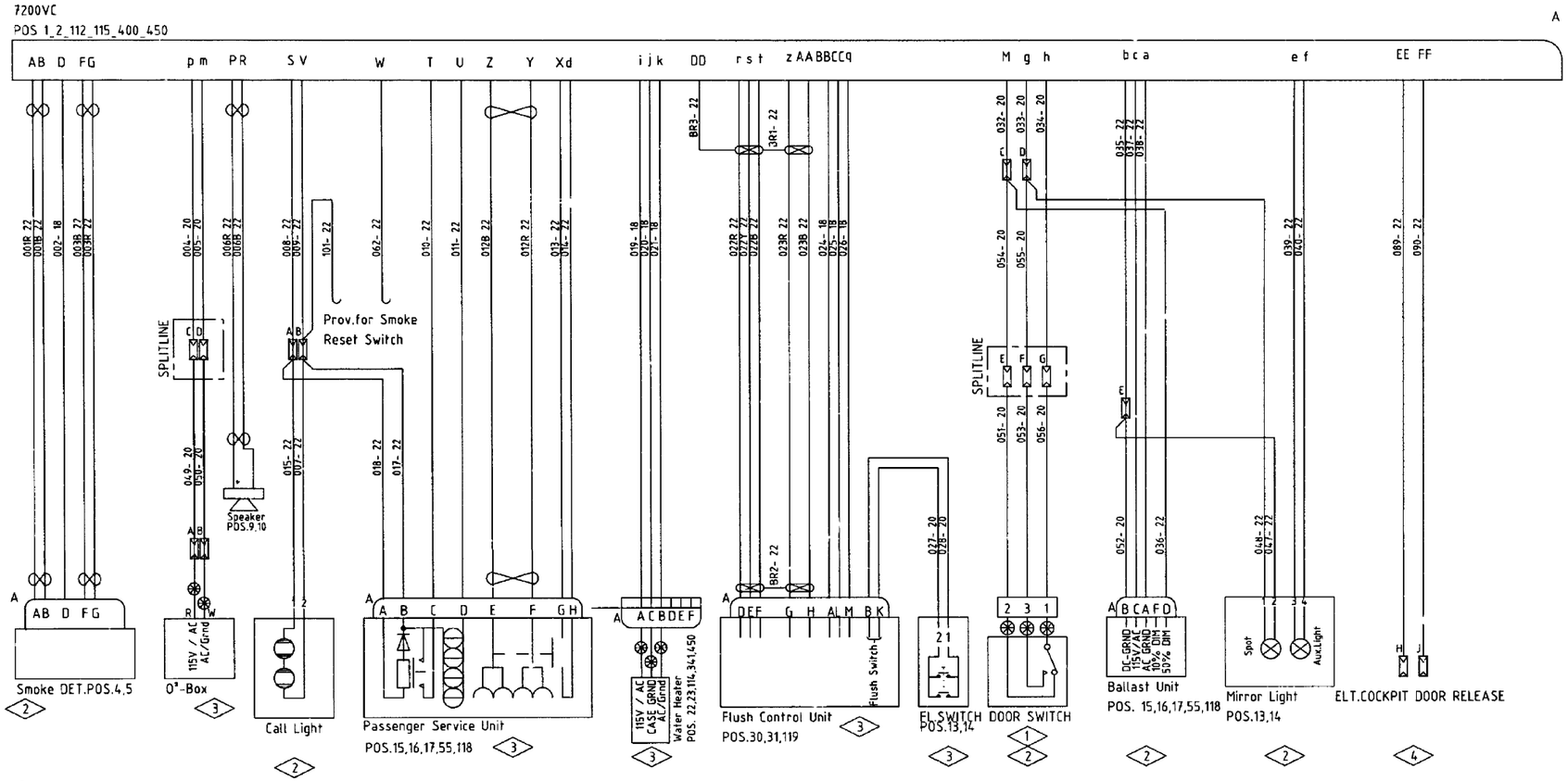

REMARK:
KABEL MIT DER KENNZEICHNUNG BR...WERDEN NICHT GEKENNZEICHNET.
CABLE WITH IDENTIFIER BR...WILL NOT BE MARKED.
ALLE KABEL SIND VOR DER ZÄHLNUMMER MIT 01 ZU KENNZEICHNEN.
ALL CABLE ARE MARKED WITH 01.
EXAMPLE: 01 001R 20

<1> BEI MODULMONTAGE ANGESCHLOSSEN
INSTALLED ON MODULASSEMBLY

<2> SIEHE ELT.ZUSAMMENBAU A2 929 01150
SEE ELT.ASSEMBLY A2 929 01150

<3> PN.SIEHE MECH.STUECKLISTE
PN.SEE MECH EQUIPMENTLIST

<4> KENNZEICHNUNG 7330VS A+B
MARKED WITH 7330VS A+B

REMARK: ALL POSITION <500 ARE SHOWN IN A2 929 01300

, = POS.7 JIFFY JUNCTION

, = POS.11 SPLICE

TASK 25-41-51-878-805-P01
D2549010604800 R225401603-000

13. Wiring Diagrams

A. For the wiring diagram see Figure 2023.

THIS PAGE IS INTENTIONALLY LEFT BLANK

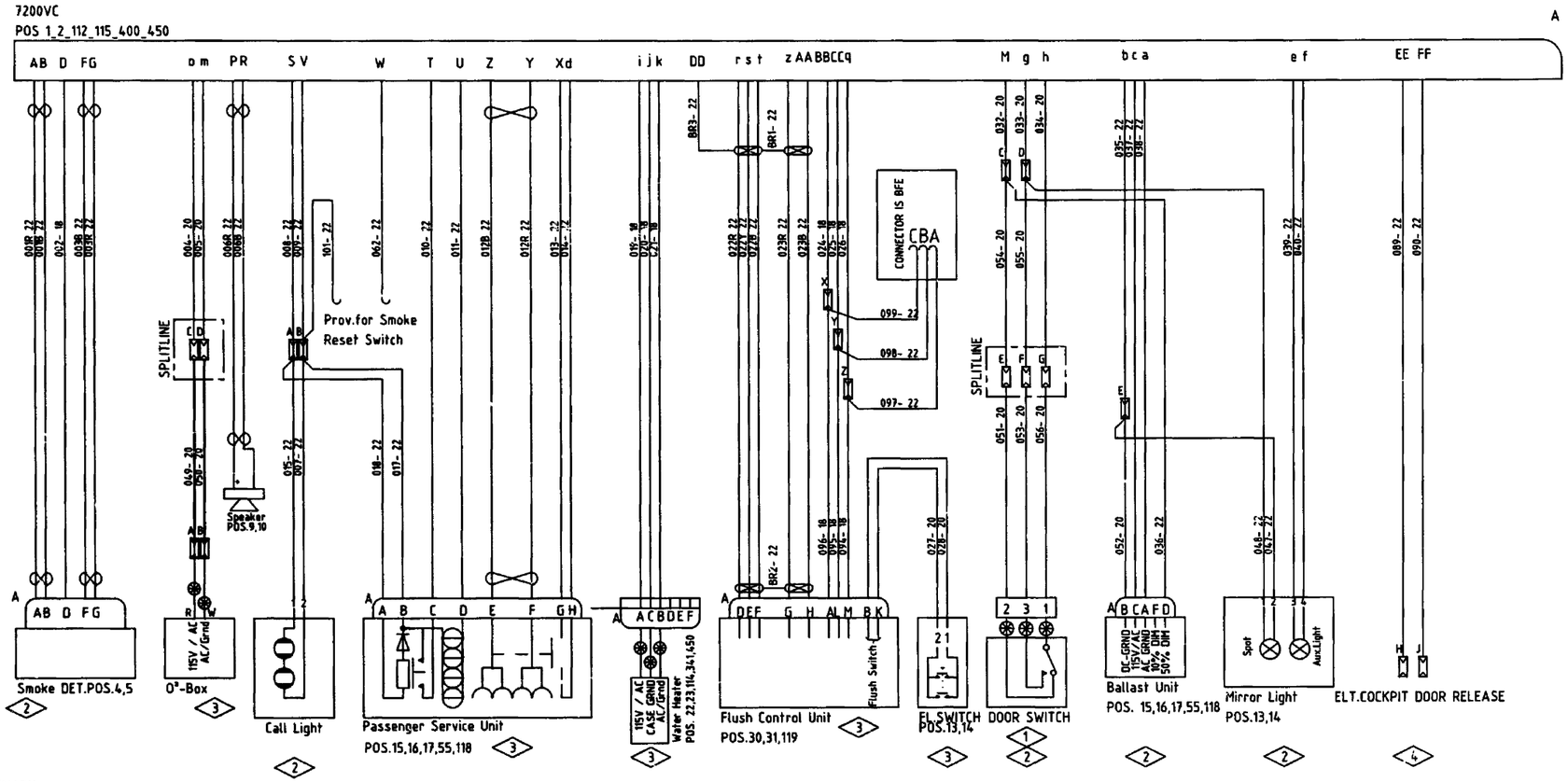

REMARK:
KABEL MIT DER KENNZEICHNUNG BR...WERDEN NICHT GEKENNZEICHNET.
CABLE WITH IDENTIFIER BR...WILL NOT BE MARKED.
ALLE KABEL SIND VOR DER ZÄHLNUMMER MIT 01 ZU KENNZEICHNEN.
ALL CABLE ARE MARKED WITH 01.
EXAMPLE: 01 001R 20

<1> BEI MODULMONTAGE ANGESCHLOSSEN
INSTALLED ON MODULASSEMBLY

<2> SIEHE ELT.ZUSAMMENBAU A2 929 01150
SEE ELT.ASSEMBLY A2 929 01150

<3> PN.SIEHE MECH.STUECKLISTE
PN.SEE MECH EQUIPMENTLIST

<4> KENNZEICHNUNG 7330VS A+B
MARKED WITH 7330VS A+B

REMARK: ALL POSITION <500 ARE SHOWN IN A2 929 01300

= POS.7 JIFFY JUNCTION

= POS.11 SPLICE

TASK 25-41-51-878-805-Q01
D2549010606400 D2549010607800 D2549010609400 R225401183-000 R225401183-002 R225401183-008

14. Wiring Diagrams

A. For the wiring diagram see Figure 2024.

THIS PAGE IS INTENTIONALLY LEFT BLANK

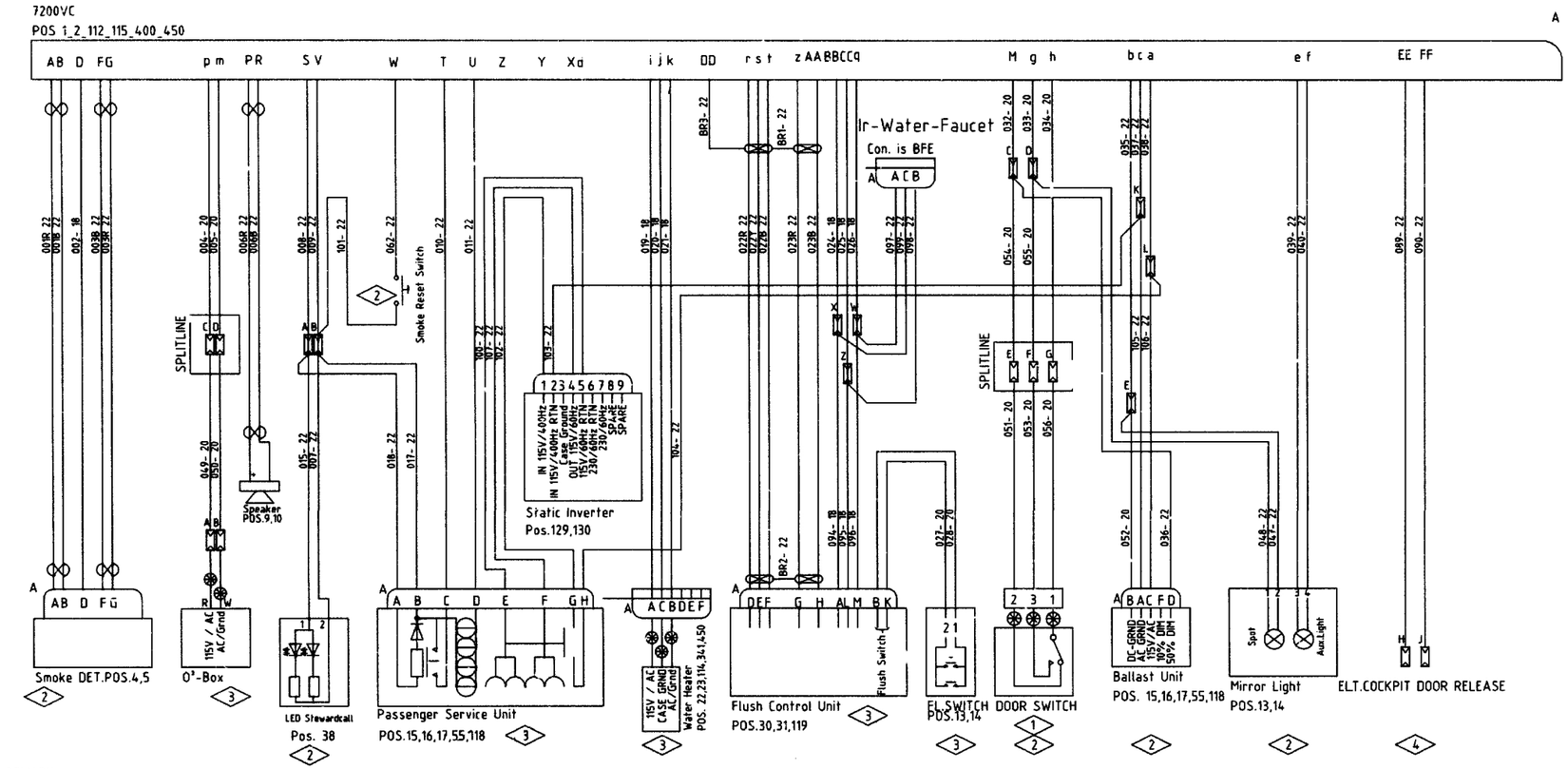

REMARK:
KABEL MIT DER KENNZEICHNUNG BR...WERDEN NICHT GEKENNZEICHNET.
CABLE WITH IDENTIFIER BR...WILL NOT BE MARKED.
ALLE KABEL SIND VOR DER ZÄHLNUMMER MIT 01 ZU KENNZEICHNEN.
ALL CABLE ARE MARKED WITH 01.
EXAMPLE: 01 001R 20

<1> BEI MODULMONTAGE ANGESCHLOSSEN
INSTALLED ON MODULASSEMBLY

<2> SIEHE ELT.ZUSAMMENBAU A2 929 01155
SEE ELT.ASSEMBLY A2 929 01155

<3> PN.SIEHE MECH.STUECKLISTE
PN.SEE MECH EQUIPMENTLIST

<4> KENNZEICHNUNG 7330VS A+B
MARKED WITH 7330VS A+B

= POS.7 JIFFY JUNCTION

= POS.11 SPLICE

TASK 25-41-51-878-805-R01

D2549010614600 D2549020508600 D2549020511800 D2549020513400 D2549020514400 D2549020514600 D2549020808600 D2549030406600 D2549030606800 D2549030608000 D2549030614400 R225401136-018 R225401136-022 R225401137-016 R225401145-008 R225401145-014 R225401196-002 R225401196-004 R225401196-006 R225401196-008 R225401196-010 R225401196-012 R225401196-014 R225401196-016 R225401196-044 R225401605-002 R225401614-000 R225401618-002 R225401619-000 R225401619-002 R225401625-000 R225401658-000

15. Wiring Diagrams

A. For the wiring diagram see Figure 2025.

THIS PAGE IS INTENTIONALLY LEFT BLANK

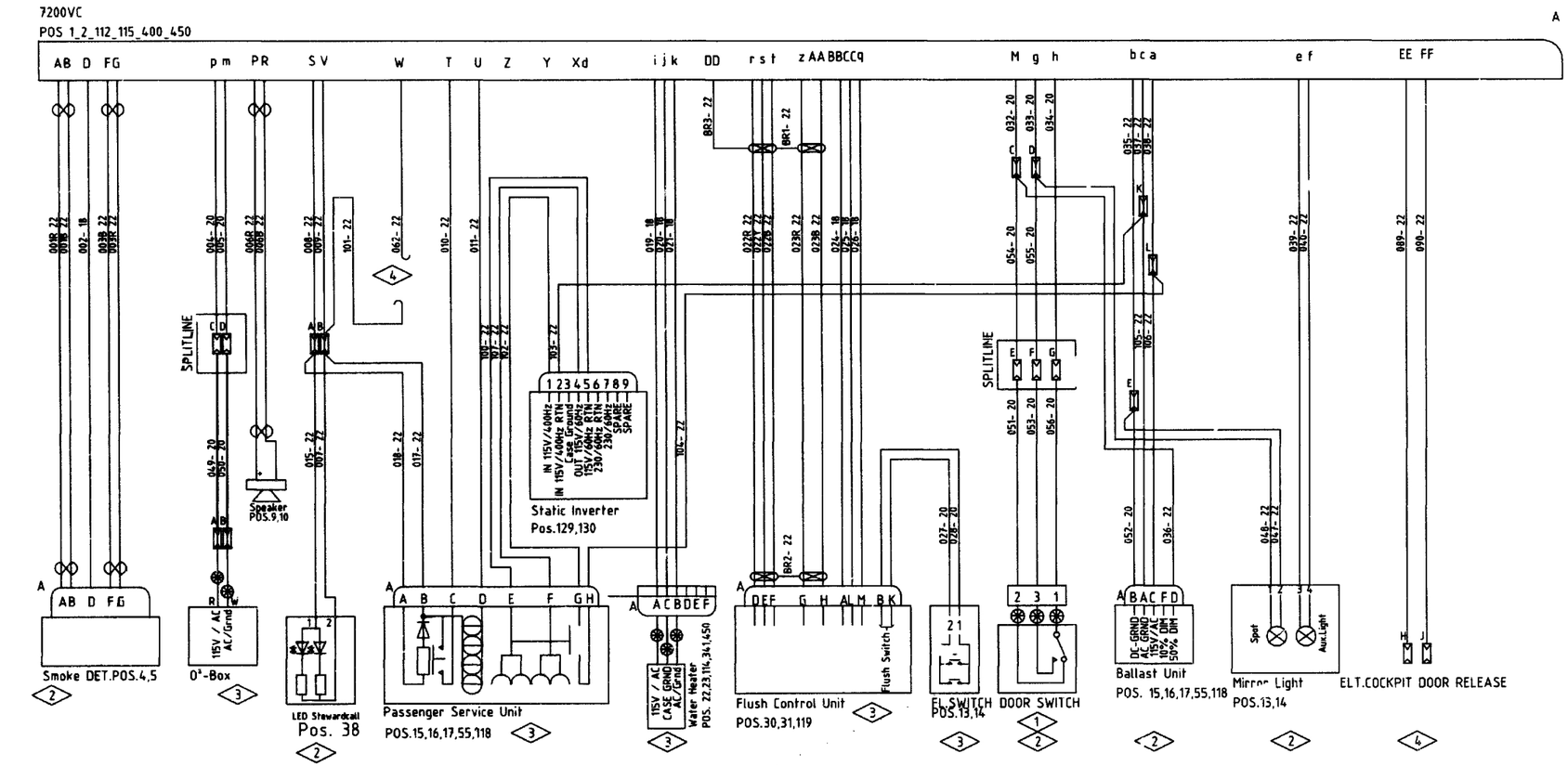

REMARK:
KABEL MIT DER KENNZEICHNUNG BR...WERDEN NICHT GEKENNZEICHNET.
CABLE WITH IDENTIFIER BR...WILL NOT BE MARKED.
ALLE KABEL SIND VOR DER ZÄHLNUMMER MIT 01 ZU KENNZEICHNEN.
ALL CABLE ARE MARKED WITH 01.
EXAMPLE: 01 001R 20

1. BEI MODULMONTAGE ANGESCHLOSSEN
   INSTALLED ON MODULASSEMBLY
2. SIEHE ELT.ZUSAMMENBAU A2 929 01150
   SEE ELT.ASSEMBLY A2 929 01150
3. PN.SIEHE MECH.STUECKLISTE
   PN.SEE MECH EQUIPMENTLIST
4. KENNZEICHNUNG 7330VS A+B
   MARKED WITH 7330VS A+B

, = POS.7 JIFFY JUNCTION

, = POS.11 SPLICE

CABLE LOOM A2 929 01305 s01iA F_CM_254151_1_0600101_01_00

Figure 2025/EN254151SHEET10600101

TASK 25-41-51-878-805-S01
D2549020504400 R225401115-002

16. Wiring Diagrams

A. For the wiring diagram see Figure 2026.

THIS PAGE IS INTENTIONALLY LEFT BLANK

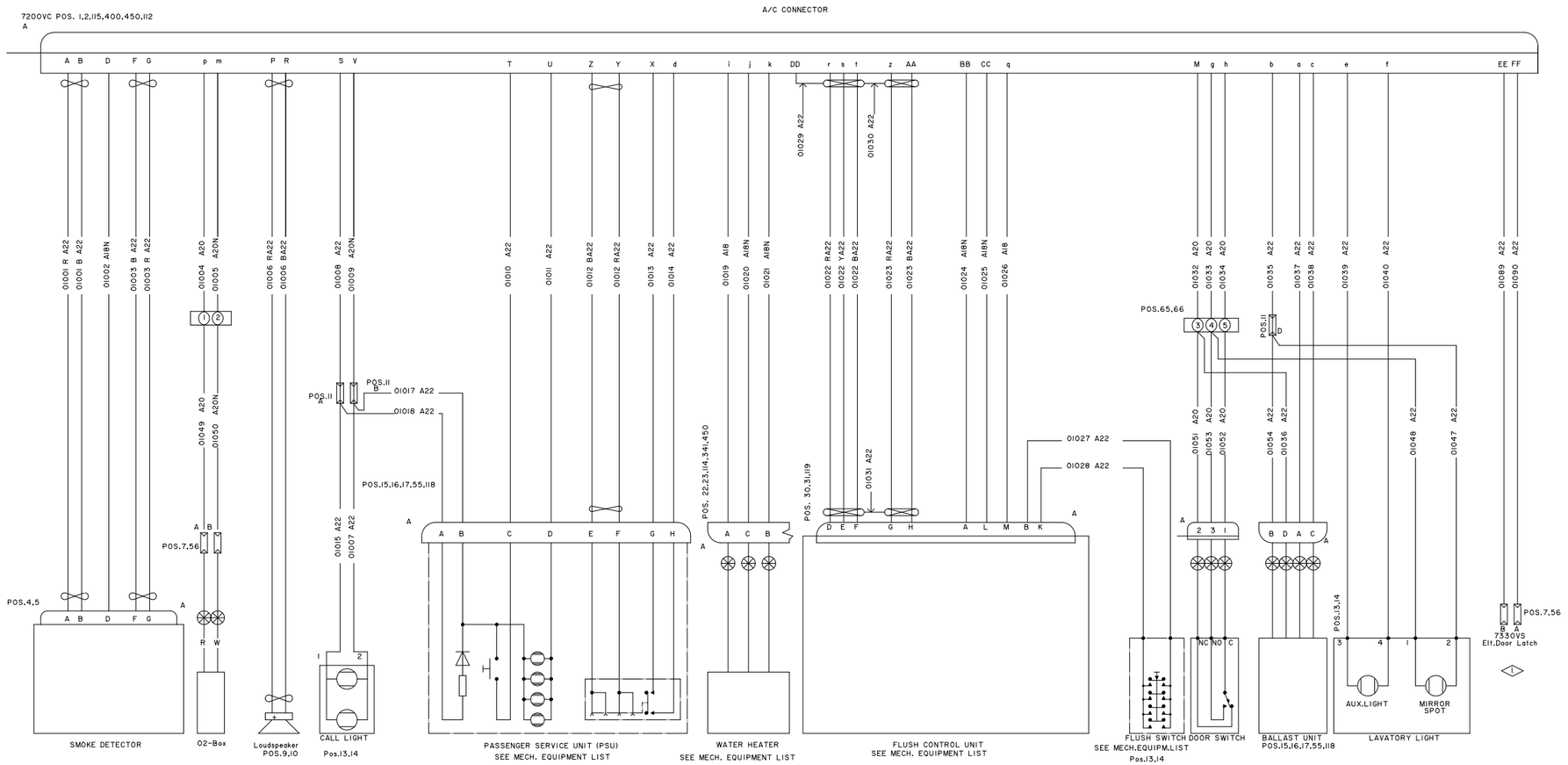

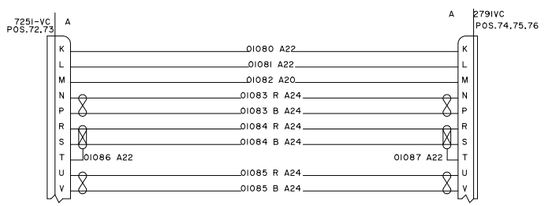

◇1 OPTIONAL, WENN NICHT EINGEBAUT AUF STOW LEGEN

OPTIONAL, WHEN NOT INSTALLED WIRES ON STOW

CABLE LOOM

A2 929 01201 s02iC

F_CM_254151_1_0610101_01_00

Figure 2026/EN254151SHEET10610101

TASK 25-41-51-878-805-T01
D2549030601600 R225401168-028

17. Wiring Diagrams

A. For the wiring diagram see Figure 2027.

THIS PAGE IS INTENTIONALLY LEFT BLANK

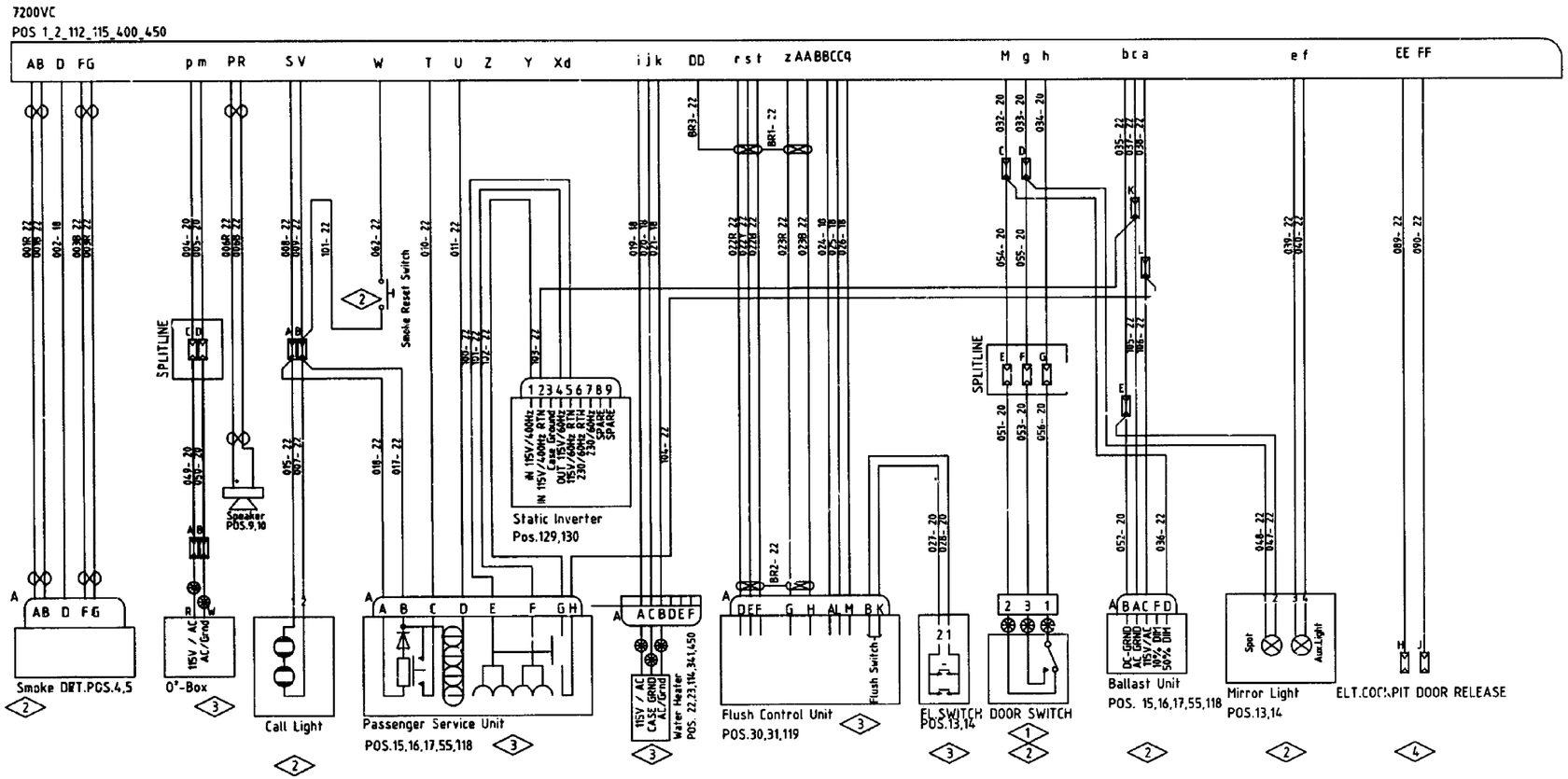

REMARK:
KABEL MIT DER KENNZEICHNUNG BR...WERDEN NICHT GEKENNZEICHNET.
CABLE WITH IDENTIFIER BR...WILL NOT BE MARKED.
ALLE KABEL SIND VOR DER ZÄHLNUMMER MIT 01 ZU KENNZEICHNEN.
ALL CABLE ARE MARKED WITH 01.
EXAMPLE: 01 001R 20

<1> BEI MODULMONTAGE ANGESCHLOSSEN
INSTALLED ON MODULASSEMBLY

<2> SIEHE ELT.ZUSAMMENBAU A2 929 01150
SEE ELT.ASSEMBLY A2 929 01150

<3> PN.SIEHE MECH.STUECKLISTE
PN.SEE MECH EQUIPMENTLIST

<4> KENNZEICHNUNG 7330VS A+B
MARKED WITH 7330VS A+B

= POS.7 JIFFY JUNCTION

= POS.11 SPLICE

TASK 25-41-51-878-805-U01
D2549040501800 D2549040502000 R225401803-000 R225401803-002

18. Wiring Diagrams

A. For the wiring diagram see Figure 2028 and Figure 2029.

THIS PAGE IS INTENTIONALLY LEFT BLANK

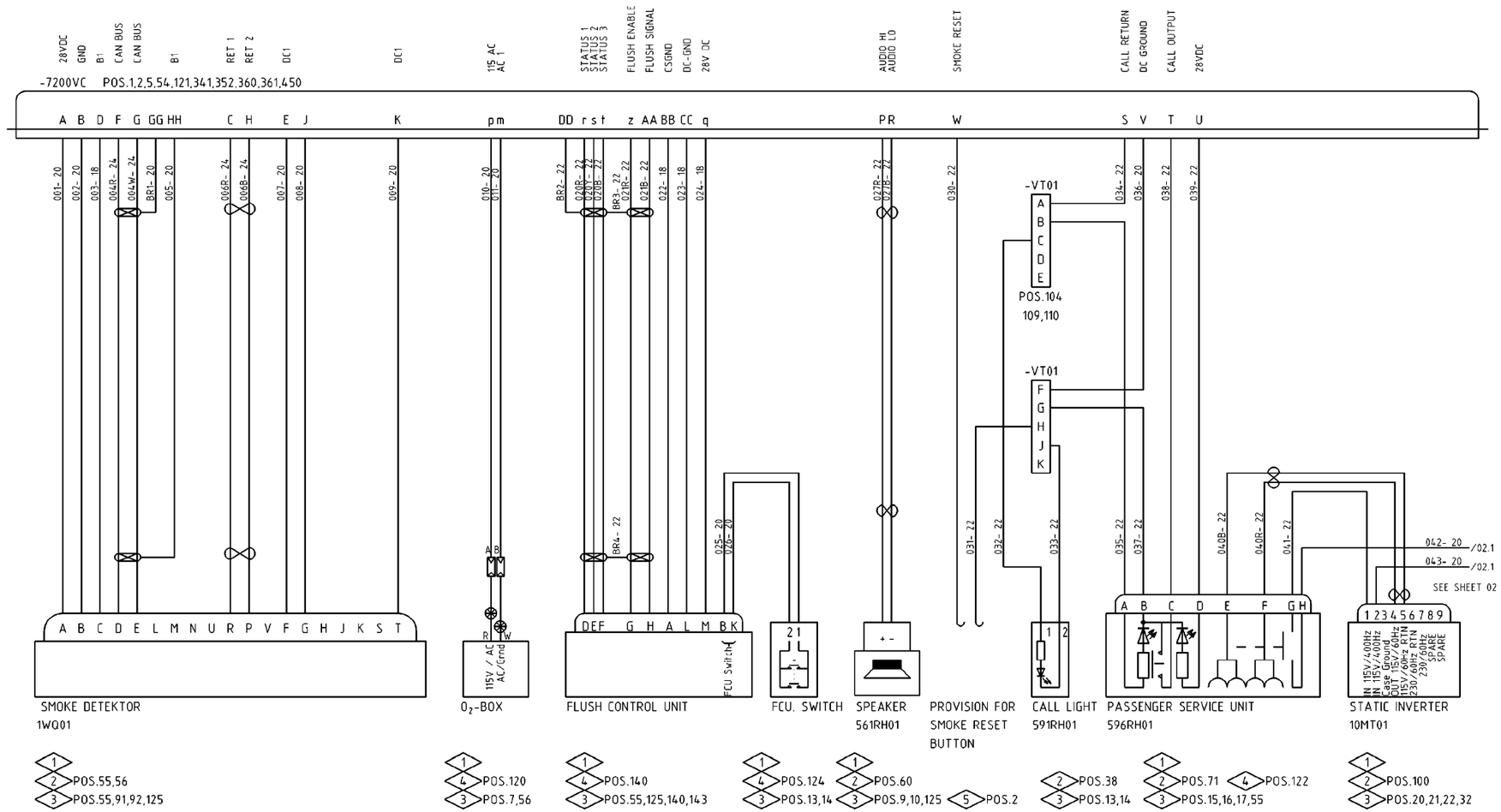

REMARK:
CABLE WITH IDENTIFIER BR...WILL NOT BE MARKED.
ALL CABLE ARE MARKED WITH 01.
EXAMPLE: 01 001R 20

1. INSTALLED ON MODULASSEMBLY
2. P.N. SEE ELT. ASSEMBLY A2 929 011..
3. P.N. SEE ELT. ASSEMBLY A2 929 01306
4. SEE MECH. ASSEMBLY A2 254 01..
5. P.N. SEE ELT. ASSEMBLY A2 929 01307

CABLE LOOM A2 929 01307 s01iP F_CM_254151_1_0630101_01_00

Figure 2028/EN254151SHEET10630101

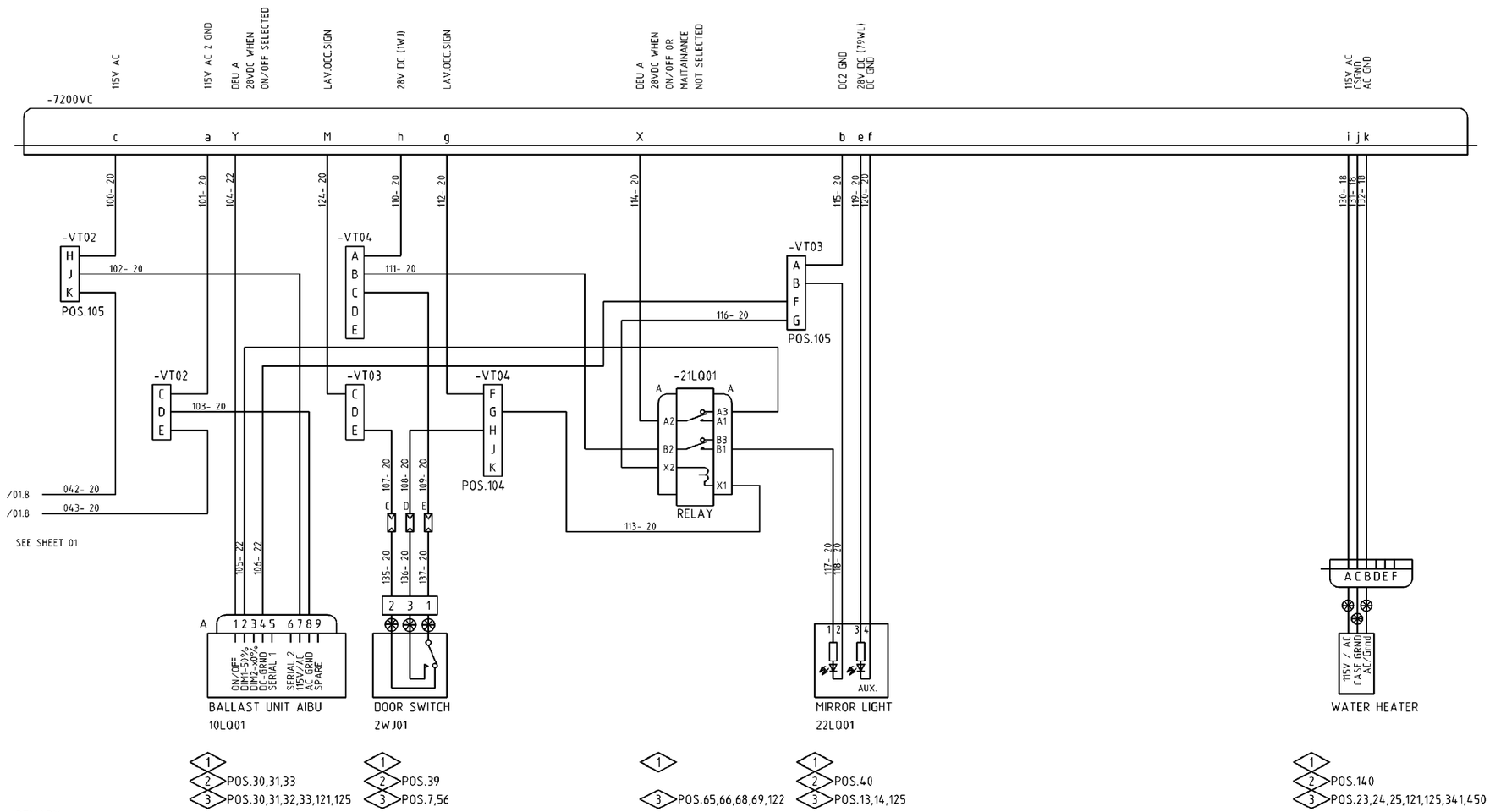

REMARK:
CABLE WITH IDENTIFIER BR...WILL NOT BE MARKED.
ALL CABLE ARE MARKED WITH 01.
EXAMPLE: 01 001R 20

1 INSTALLED ON MODULASSEMBLY
2 P.N. SEE ELT. ASSEMBLY A2 929 011..
3 P.N. SEE ELT. ASSEMBLY A2 929 01306
4 SEE MECH. ASSEMBLY A2 254 01..
5 P.N. SEE ELT. ASSEMBLY A2 929 01307

CABLE LOOM

A2 929 01307 s02iP

F_CM_254151_1_0630101_02_00

Figure 2029/EN254151SHEET10630102

TASK 25-41-51-878-805-V01
D2549030408000 D2549030410400 R225401662-000 R225401662-002

19. Wiring Diagrams

A. For the wiring diagram see Figure 2030.

THIS PAGE IS INTENTIONALLY LEFT BLANK

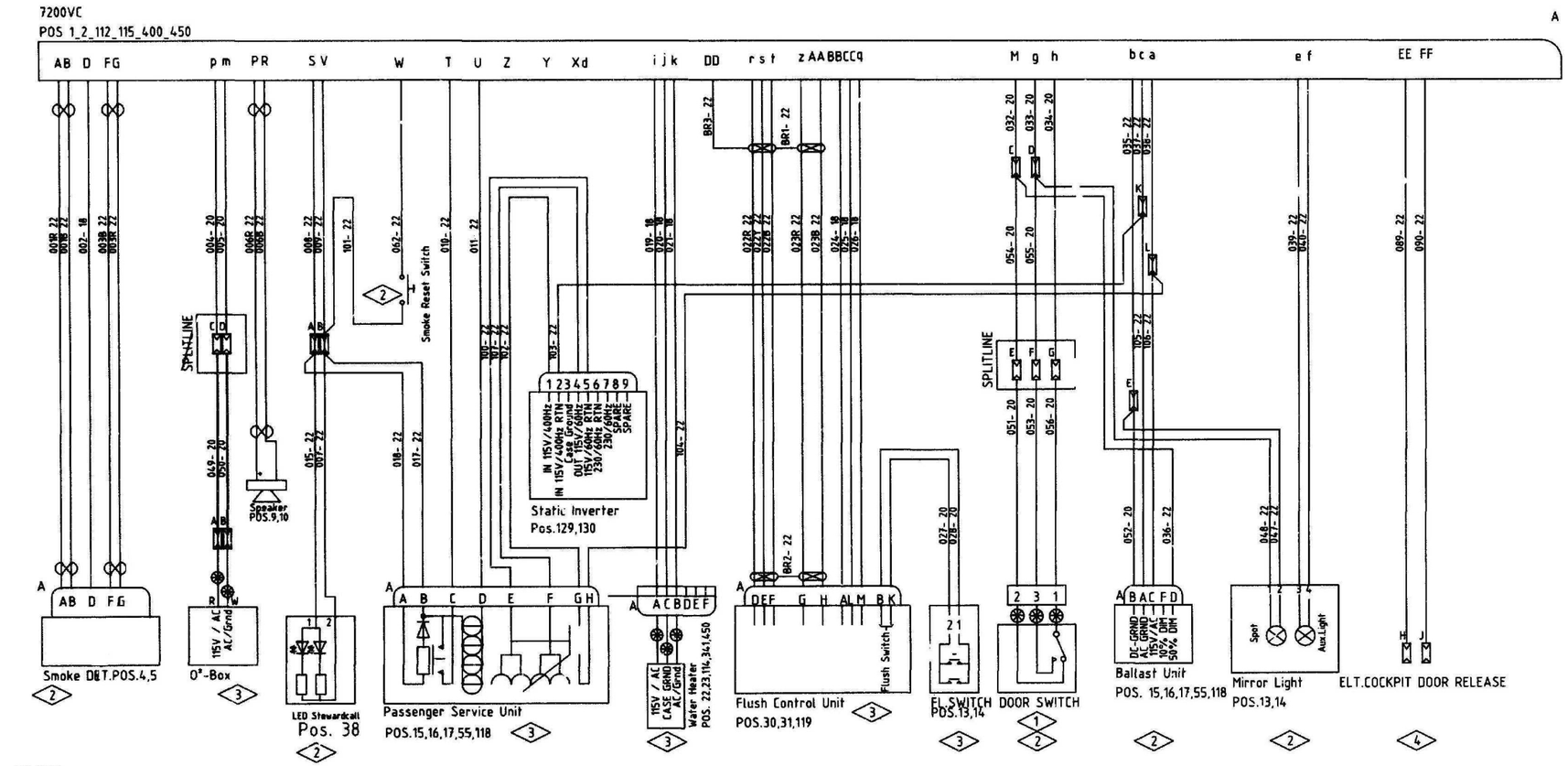

REMARK:
KABEL MIT DER KENNZEICHNUNG BR...WERDEN NICHT GEKENNZEICHNET.
CABLE WITH IDENTIFIER BR...WILL NOT BE MARKED.
ALLE KABEL SIND VOR DER ZÄHLNUMMER MIT "1" ZU KENNZEICHNEN.
ALL CABLE ARE MARKED WITH 01.
EXAMPLE: 01 001R 20

(1) BEI MODULMONTAGE ANGESCHLOSSEN
INSTALLED ON MODULASSEMBLY

(2) SIEHE ELT.ZUSAMMENBAU A2 929 01155
SEE ELT.ASSEMBLY A2 929 01155

(3) PN.SIEHE MECH.STÜCKLISTE
PN.SEE MECH EQUIPMENTLIST

(4) KENNZEICHNUNG 7330VS A+B
MARKED WITH 7330VS A+B

= POS.7 JIFFY JUNCTION

= POS.11 SPLICE

CABLE LOOM

A2 929 01305 s02iA

f_cm_254151_1_0640101_01_00

Wiring Diagram
Figure 2030/EN254151SHEET10640101

TASK 25-41-51-878-805-W01
D2549030412800 D2549030705200 R225401689-004 R225401689-006

20. Wiring Diagrams

A. For the wiring diagram see Figure 2031 and Figure 2032.

THIS PAGE IS INTENTIONALLY LEFT BLANK

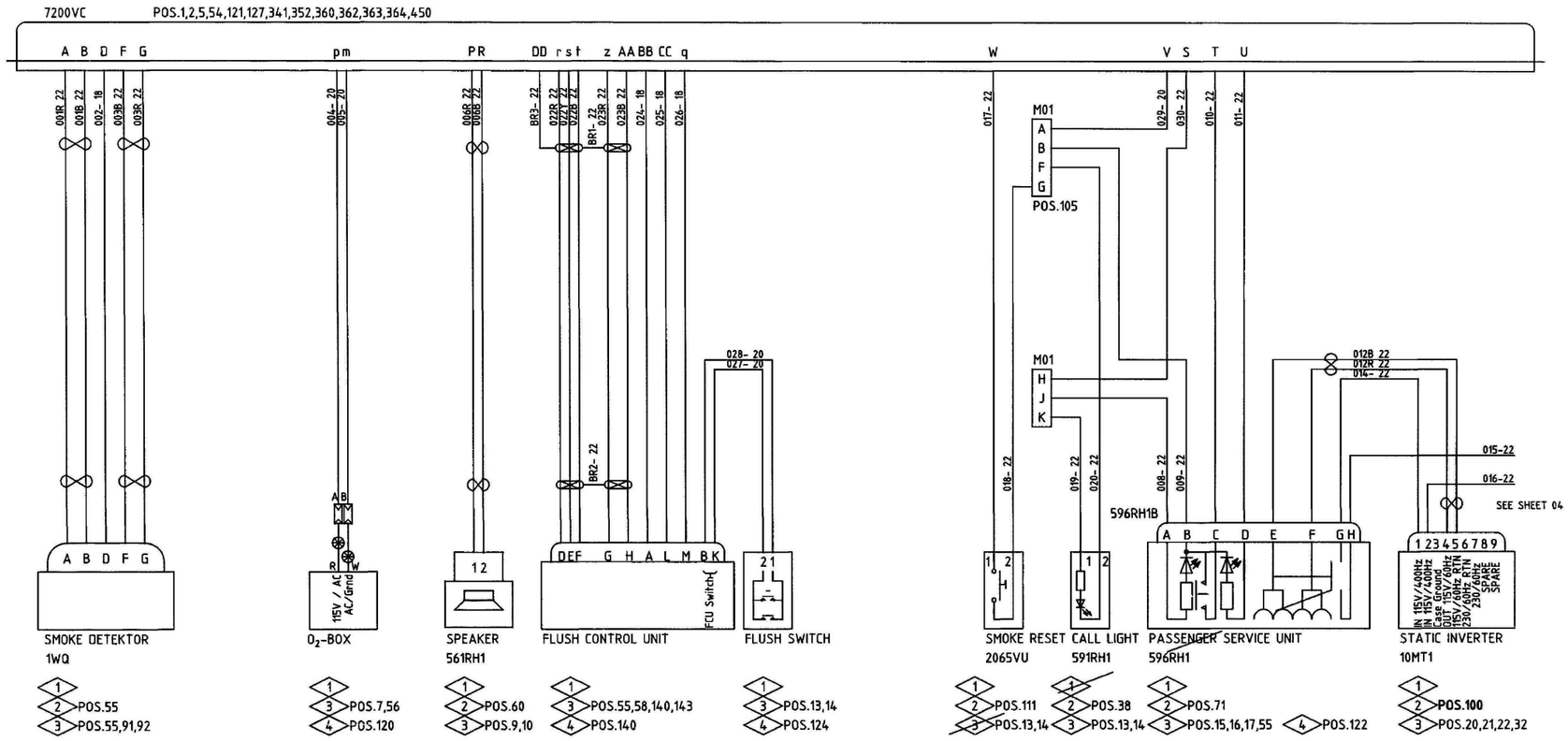

REMARK:

KABEL MIT DER KENNZEICHNUNG BR...WERDEN NICHT GEKENNZEICHNET.
CABLE WITH IDENTIFIER BR...WILL NOT BE MARKED.

ALLE KABEL SIND VOR DER ZÄHLNUMMER MIT 01 ZU KENNZEICHNEN.
ALL CABLE ARE MARKED WITH 01.
EXAMPLE: 01 001R 20

1. BEI MODULMONTAGE ANGESCHLOSSEN
   INSTALLED ON MODULASSEMBLY
2. P.N. SIEHE ELTR. ZUSAMMENBAU A2 929 01159
   P.N. SEE ELT. ASSEMBLY A2 929 01159
3. P.N. SIEHE ELT. ZUSAMMENBAU A2 929 01308
   P.N. SEE ELT. ASSEMBLY A2 929 01308
4. P.N. SIEHE MECH. ZUSAMMENBAU A2 254 01.
   SEE MECH. ASSEMBLY A2 254 01..
5. P.N. SIEHE ELT. ZUSAMMENBAU A2 929 01309
   P.N. SEE ELT. ASSEMBLY A2 929 01309

CABLE LOOM

A2 929 01309 s03iB

f_cm_254151_1_0650101_01_00

Figure 2031/EN254151SHEET10650101

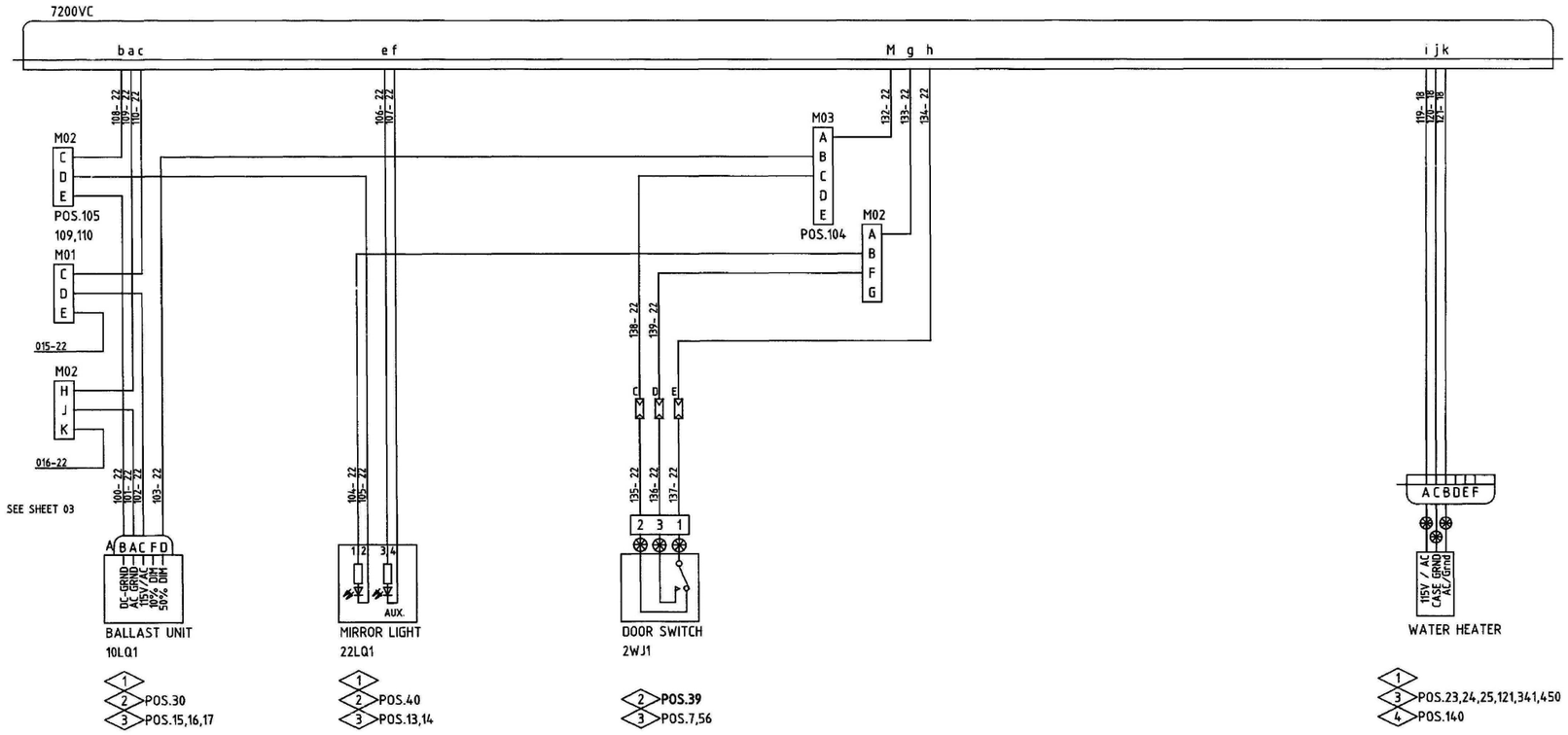

REMARK:

KABEL MIT DER KENNZEICHNUNG BR...WERDEN NICHT GEKENNZEICHNET.
CABLE WITH IDENTIFIER BR...WILL NOT BE MARKED.

ALLE KABEL SIND VOR DER ZÄHLNUMMER MIT 01 ZU KENNZEICHNEN.
ALL CABLE ARE MARKED WITH 01.
EXAMPLE: 01 001R 20

1. BEI MODULMONTAGE ANGESCHLOSSEN
   INSTALLED ON MODULASSEMBLY
2. P.N. SIEHE ELTR. ZUSAMMENBAU A2 929 01159
   P.N. SEE ELT. ASSEMBLY A2 929 01159
3. P.N. SIEHE ELT. ZUSAMMENBAU A2 929 01308
   P.N. SEE ELT. ASSEMBLY A2 929 01308
4. P.N. SIEHE MECH. ZUSAMMENBAU A2 254 01..
   SEE MECH. ASSEMBLY A2 254 01..
5. P.N. SIEHE ELT. ZUSAMMENBAU A2 929 01309
   P.N. SEE ELT. ASSEMBLY A2 929 01309

CABLE LOOM

A2 929 01309 s04iB

f_cm_254151_1_0650101_02_00

Figure 2032/EN254151SHEET10650102

TASK 25-41-51-880-805-W01
D2549020804400 R225401196-018 R225401196-020 R225401196-022 R225401196-024 R225401602-000

21. Wiring Diagrams

A. For the wiring diagram see Figure 2033 and Figure 2034.

THIS PAGE IS INTENTIONALLY LEFT BLANK

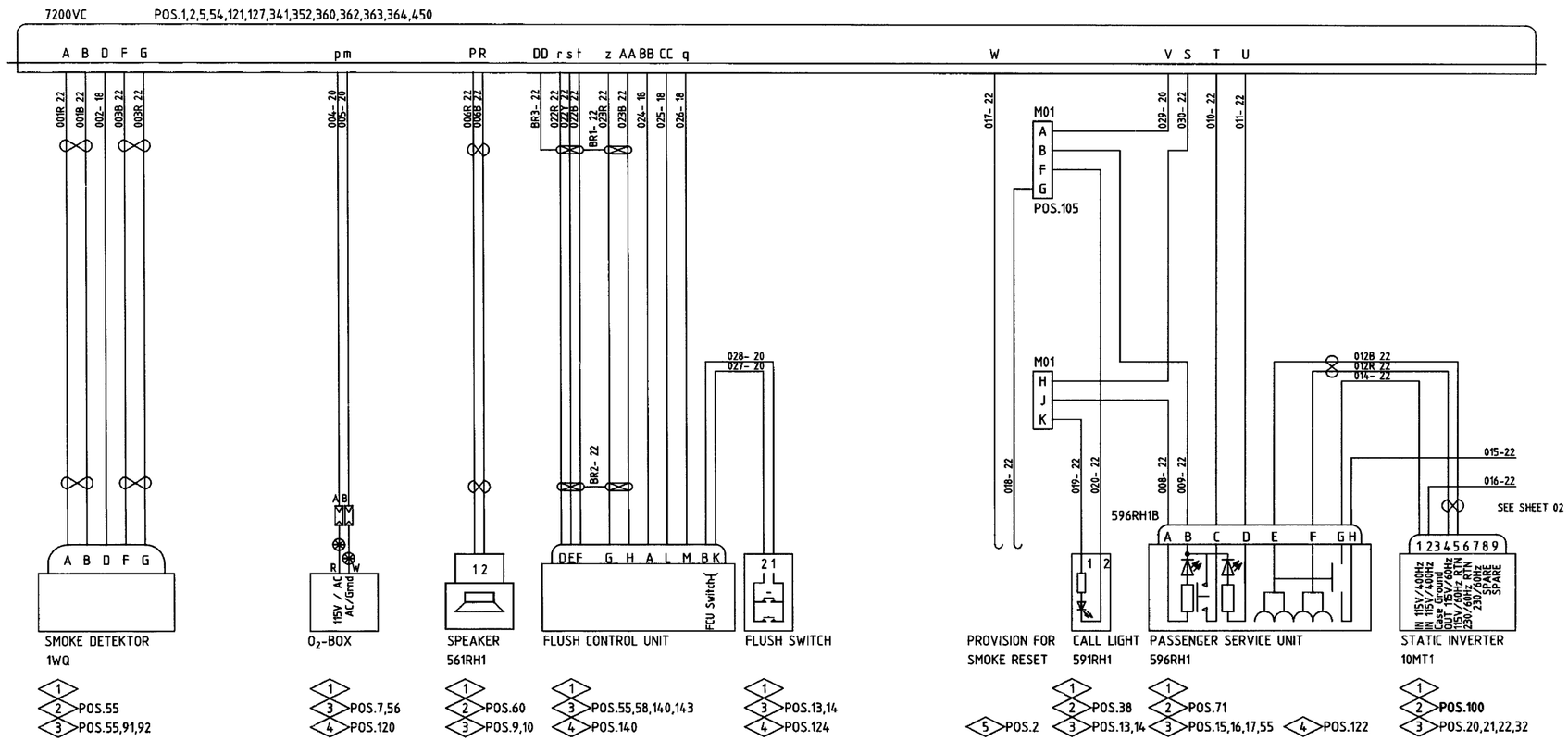

REMARK:

KABEL MIT DER KENNZEICHNUNG BR...WERDEN NICHT GEKENNZEICHNET.
CABLE WITH IDENTIFIER BR...WILL NOT BE MARKED.

ALLE KABEL SIND VOR DER ZÄHLNUMMER MIT 01 ZU KENNZEICHNEN.
ALL CABLE ARE MARKED WITH 01.
EXAMPLE: 01 001R 20

1. BEI MODULMONTAGE ANGESCHLOSSEN
   INSTALLED ON MODULASSEMBLY
2. P.N. SIEHE ELTR. ZUSAMMENBAU A2 929 01159
   P.N. SEE ELT. ASSEMBLY A2 929 01159
3. P.N. SIEHE ELT. ZUSAMMENBAU A2 929 01308
   P.N. SEE ELT. ASSEMBLY A2 929 01308
4. P.N. SIEHE MECH. ZUSAMMENBAU A2 254 01..
   SEE MECH. ASSEMBLY A2 254 01..
5. P.N. SIEHE ELT. ZUSAMMENBAU A2 929 01309
   P.N. SEE ELT. ASSEMBLY A2 929 01309

CABLE LOOM

A2 929 01309 s01 iB

f_cm_254151_1_0660101_01_00

Figure 2033/EN254151SHEET10660101

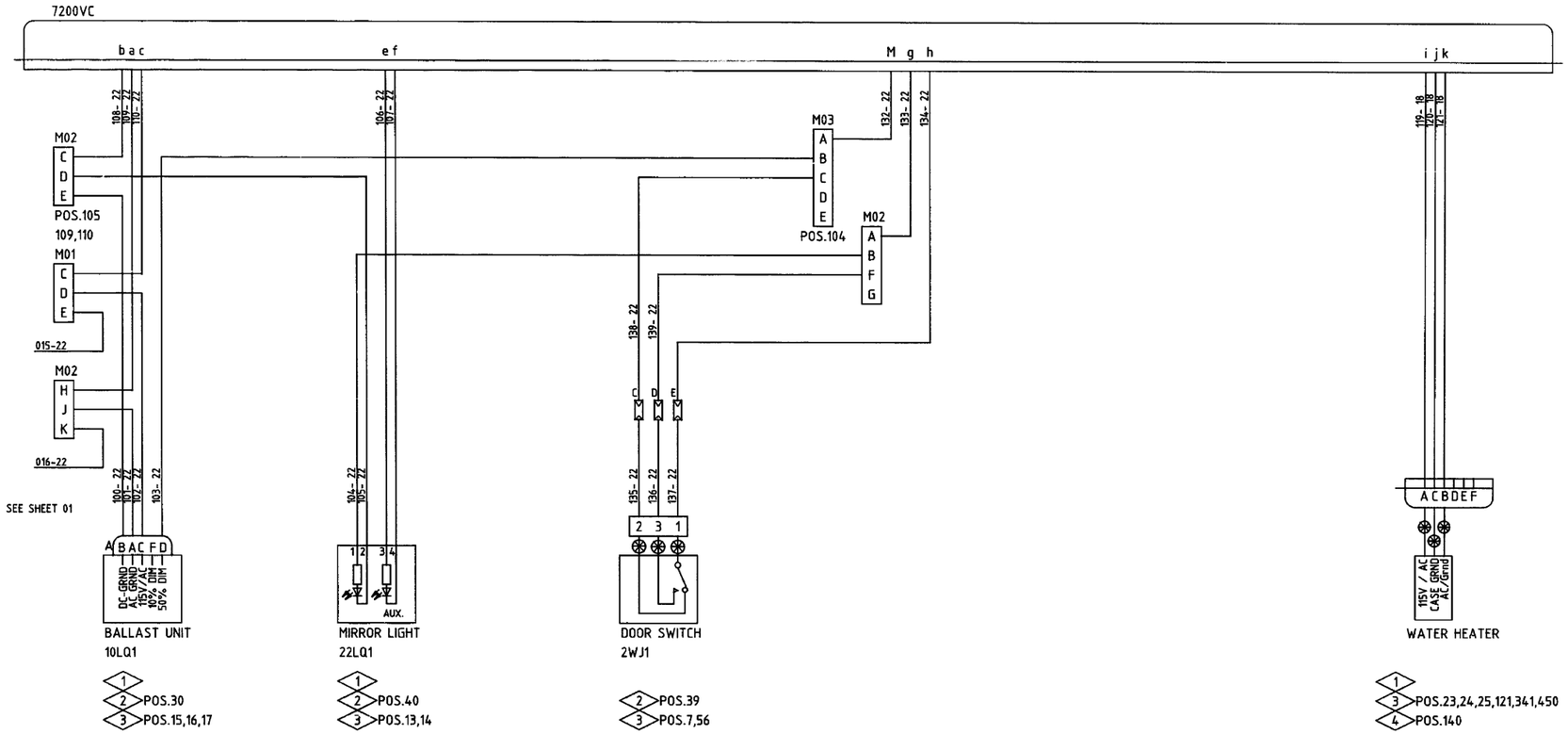

REMARK:

KABEL MIT DER KENNZEICHNUNG BR...WERDEN NICHT GEKENNZEICHNET.
CABLE WITH IDENTIFIER BR...WILL NOT BE MARKED.

ALLE KABEL SIND VOR DER ZÄHLNUMMER MIT 01 ZU KENNZEICHNEN.
ALL CABLE ARE MARKED WITH 01.
EXAMPLE: 01 001R 20

1. BEI MODULMONTAGE ANGESCHLOSSEN
   INSTALLED ON MODULASSEMBLY
2. P.N. SIEHE ELTR. ZUSAMMENBAU A2 929 01159
   P.N. SEE ELT. ASSEMBLY A2 929 01159
3. P.N. SIEHE ELT. ZUSAMMENBAU A2 929 01308
   P.N. SEE ELT. ASSEMBLY A2 929 01308
4. P.N. SIEHE MECH. ZUSAMMENBAU A2 254 01..
   SEE MECH. ASSEMBLY A2 254 01..
5. P.N. SIEHE ELT. ZUSAMMENBAU A2 929 01309
   P.N. SEE ELT. ASSEMBLY A2 929 01309

CABLE LOOM

A2 929 01309 s02 iB

f_cm_254151_1_0660101_02_00

Figure 2034/EN254151SHEET10660102

TASK 25-41-51-881-805-W01
D2549030505400 D2549010603800, R225401600-000 R225401196-000

22. Wiring Diagrams

A. For the wiring diagram see Figure 2035 .

THIS PAGE IS INTENTIONALLY LEFT BLANK

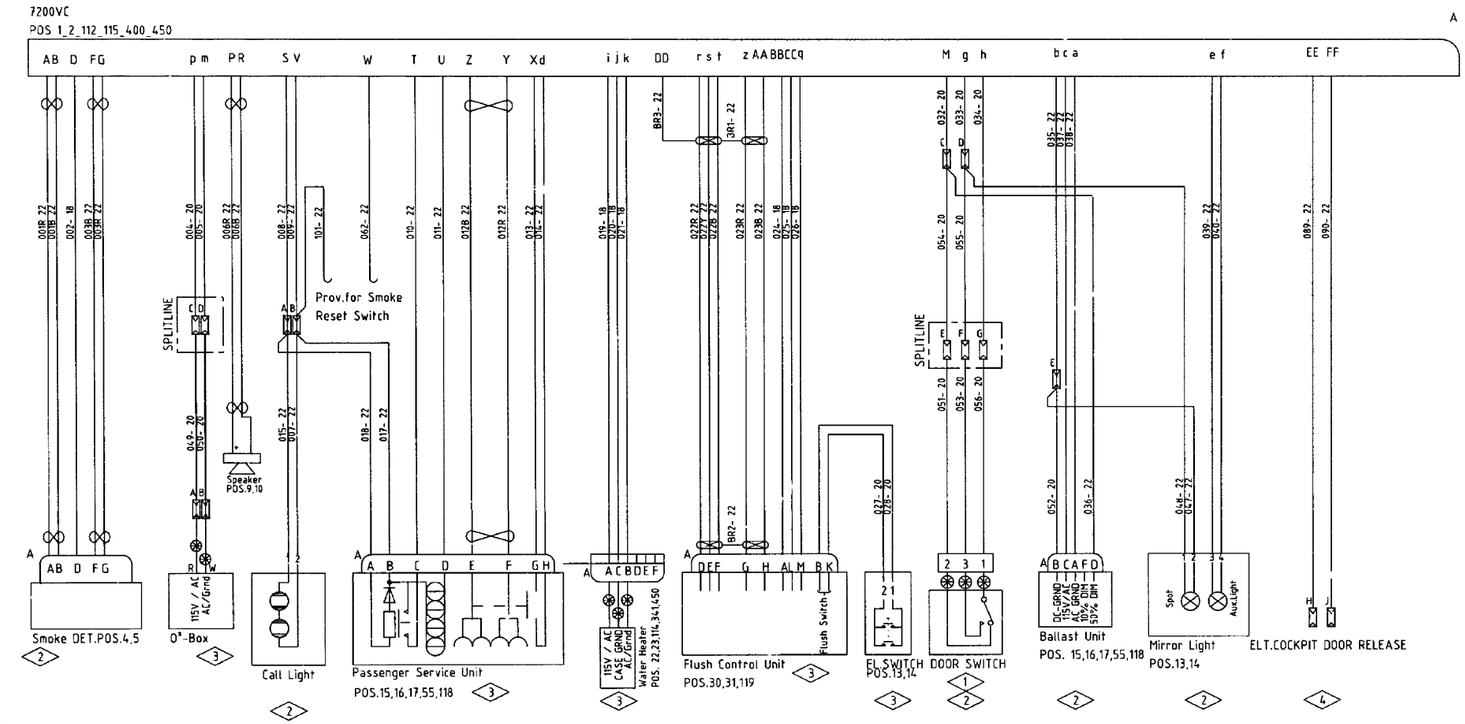

REMARK:
CABEL MIT DER KENNZEICHNUNG BR...WERDEN NICHT GEKENNZEICHNET.
CABLE WITH IDENTIFIER BR...WILL NOT BE MARKED.
ALLE KABEL SIND VOR DER ZÄHLNUMMER MIT 01 ZU KENNZEICHNEN.
ALL CABLE ARE MARKED WITH 01.
EXAMPLE: 01 001R 20

1. BEI MODULMONTAGE ANGESCHLOSSEN
   INSTALLED ON MODULASSEMBLY
2. SIEHE ELT.ZUSAMMENBAU A2 929 01150
   SEE ELT.ASSEMBLY A2 929 01150
3. PN.SIEHE MECH.STUECKLISTE
   PN.SEE MECH EQUIPMENTLIST
4. KENNZEICHNUNG 7330VS A+B
   MARKED WITH 7330VS A+B

REMARK: ALL POSITION <500 ARE SHOWN IN A2 929 01300

= POS.7 JIFFY JUNCTION

= POS.11 SPLICE

CABLE LOOM

A2 929 01301s01iD

f_cm_254151_1_0670101_01_00

Figure 2035/EN254151SHEET10670101

TASK 25-41-51-882-805-W01
D2549010604200, R225401600-002

23. Wiring Diagrams

A. For the wiring diagram see Figure 2036 .

THIS PAGE IS INTENTIONALLY LEFT BLANK

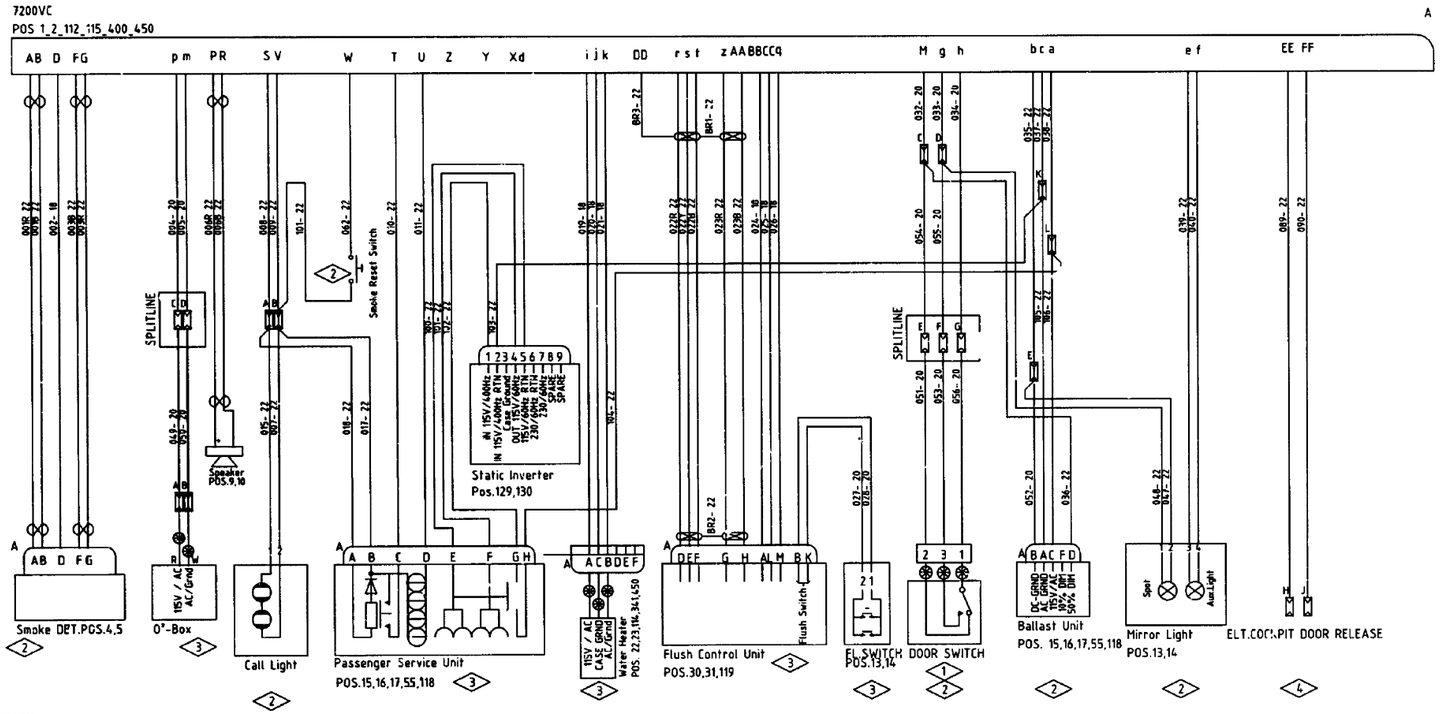

REMARK:
KABEL MIT DER KENNZEICHNUNG BR...WERDEN NICHT GEKENNZEICHNET.
CABLE WITH IDENTIFIER BR...WILL NOT BE MARKED.
ALLE KABEL SIND VOR DER ZÄHLNUMMER MIT 01 ZU KENNZEICHNEN.
ALL CABLE ARE MARKED WITH 01.
EXAMPLE: 01 001R 20

<1> BEI MODULMONTAGE ANGESCHLOSSEN
INSTALLED ON MODULASSEMBLY

<2> SIEHE ELT.ZUSAMMENBAU A2 929 01150
SEE ELT.ASSEMBLY A2 929 01150

<3> PN.SIEHE MECH.STUECKLISTE
PN.SEE MECH EQUIPMENTLIST

<4> KENNZEICHNUNG 7330VS A+B
MARKED WITH 7330VS A+B

= POS.7 JIFFY JUNCTION

= POS.11 SPLICE

TASK 25-41-51-883-805-W01
D2549010609600, R225401600-004

24. Wiring Diagrams

A. For the wiring diagram see Figure 2037 and Figure 2038.

THIS PAGE IS INTENTIONALLY LEFT BLANK

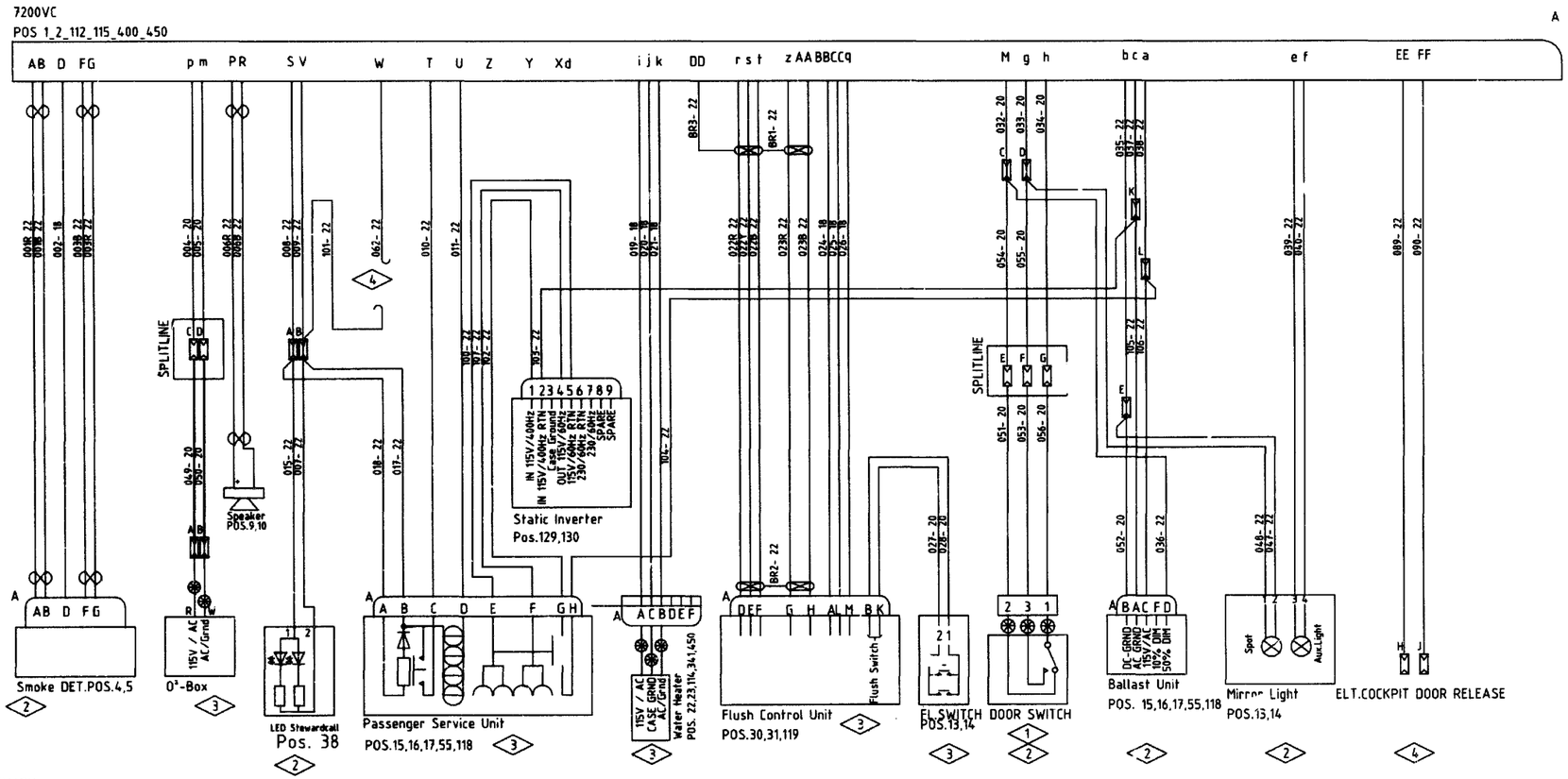

REMARK:
KABEL MIT DER KENNZEICHNUNG BR...WERDEN NICHT GEKENNZEICHNET.
CABLE WITH IDENTIFIER BR...WILL NOT BE MARKED.
ALLE KABEL SIND VOR DER ZÄHLNUMMER MIT 0₁ ZU KENNZEICHNEN.
ALL CABLE ARE MARKED WITH 01.
EXAMPLE: 01 001R 20

<1> BEI MODULMONTAGE ANGESCHLOSSEN
INSTALLED ON MODULASSEMBLY

<2> SIEHE ELT.ZUSAMMENBAU A2 929 01155
SEE ELT.ASSEMBLY A2 929 01155

<3> PN.SIEHE MECH.STUECKLISTE
PN.SEE MECH EQUIPMENTLIST

<4> KENNZEICHNUNG 7330VS A+B
MARKED WITH 7330VS A+B

, = POS.7 JIFFY JUNCTION

, = POS.11 SPLICE

CABLE LOOM

A2 929 01305s01iA

f_cm_254151_1_0690101_01_00

Figure 2037/EN254151SHEET10690101

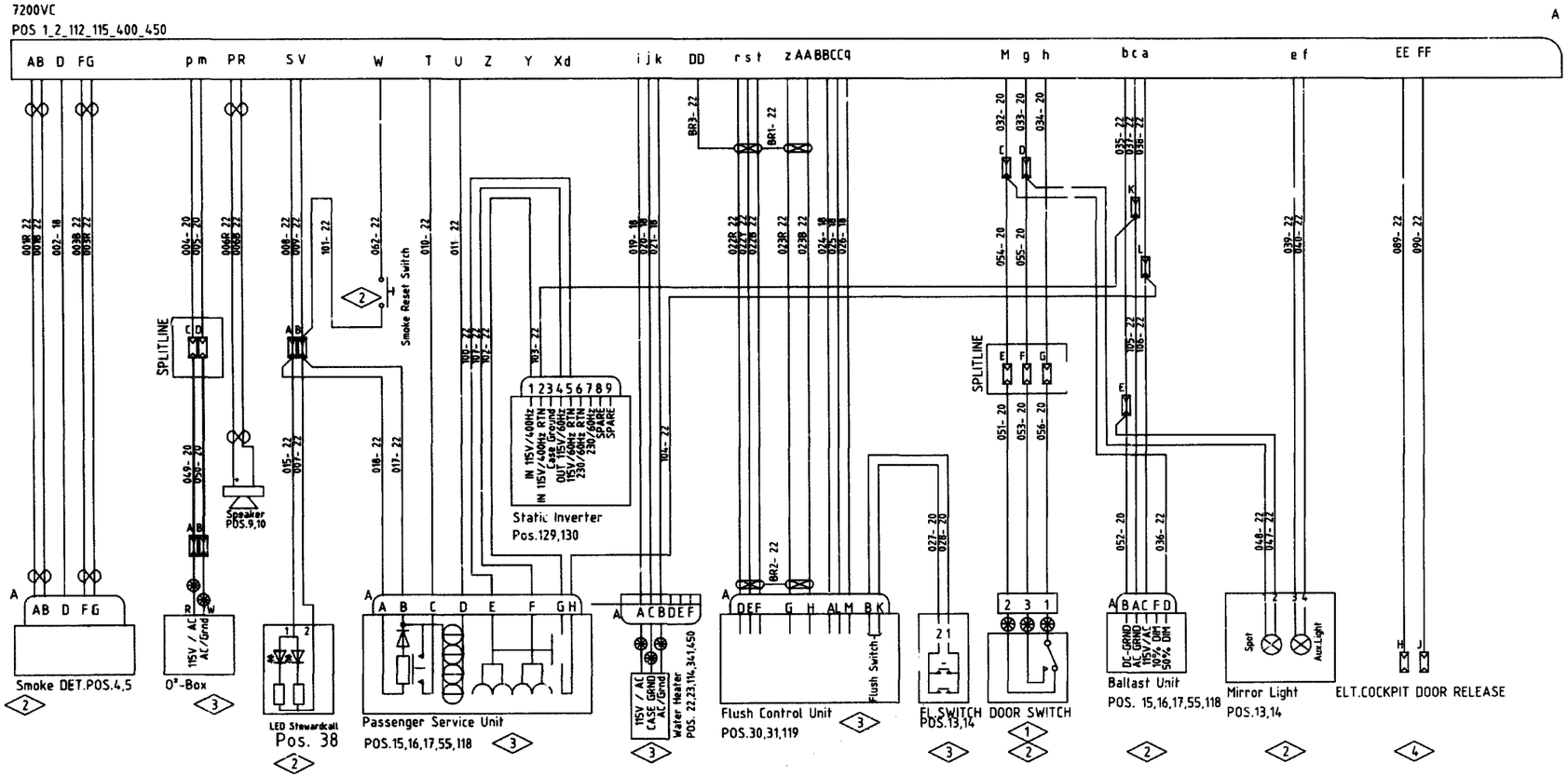

REMARK:
KABEL MIT DER KENNZEICHNUNG BR...WERDEN NICHT GEKENNZEICHNET.
CABLE WITH IDENTIFIER BR...WILL NOT BE MARKED.
ALLE KABEL SIND VOR DER ZÄHLNUMMER MIT 01 ZU KENNZEICHNEN.
ALL CABLE ARE MARKED WITH 01.
EXAMPLE: 01 001R 20

(1) BEI MODULMONTAGE ANGESCHLOSSEN
INSTALLED ON MODULASSEMBLY

(2) SIEHE ELT.ZUSAMMENBAU A2 929 01155
SEE ELT.ASSEMBLY A2 929 01155

(3) PN.SIEHE MECH.STUECKLISTE
PN.SEE MECH EQUIPMENTLIST

(4) KENNZEICHNUNG 7330VS A+B
MARKED WITH 7330VS A+B

= POS.7 JIFFY JUNCTION

= POS.11 SPLICE

CABLE LOOM

A2 929 01305s02iA

f_cm_254151_1_0690101_02_00

Figure 2038/EN254151SHEET10690102

DISASSEMBLY

TASK 25-41-51-000-801-A01

D2547161903000 D2549010500000 D2549010500400 D2549010500600 D2549010500800
D2549010501000 D2549010501200 D2549010501400 D2549010501600 D2549010501800
D2549010502000 D2549010502200 D2549010502600 D2549010502800 D2549010503200
D2549010503400 D2549010503600 D2549010503800 D2549010504200 D2549010504400
D2549010504600 D2549010504800 D2549010505000 D2549010505200 D2549010505400
D2549010505600 D2549010505800 D2549010506000 D2549010506200 D2549010506400
D2549010506800 D2549010507000 D2549010507200 D2549010507400 D2549010507600
D2549010507800 D2549010508000 D2549010508200 D2549010508400 D2549010508600
D2549010508800 D2549010509000 D2549010509200 D2549010509400 D2549010509600
D2549010509800 D2549010510000 D2549010510400 D2549010510600 D2549010510800
D2549010511000 D2549010511400 D2549010511600 D2549010511800 D2549010512000
D2549010512200 D2549010512400 D2549010513000 D2549010513200 D2549010513400
D2549010513600 D2549010513800 D2549010514000 D2549010514400 D2549010600000
D2549010600200 D2549010600400 D2549010600600 D2549010601000 D2549010601200
D2549010602000 D2549010602400 D2549020500000 D2549020500400 D2549020500600
D2549020500800 D2549020501000 D2549020501200 D2549020501400 D2549020501600
D2549020501800 D2549020502000 D2549020502400 D2549020502600 D2549020502800
D2549020503000 D2549020503200 D2549020503400 D2549020503600 D2549020504000
D2549020504200 D2549020504400 D2549020504600 D2549020504800 D2549020505000
D2549020505200 D2549020506000 D2549020506200 D2549020506400 D2549020506600
D2549020506800 D2549020507000 D2549020510800 D2549020600000 D2549020600200
D2549020600400 D2549020600800 D2549020601000 D2549020601400 D2549020601600
D2549020601800 D2549020602000 D2549020602200 D2549020602400 D2549020602800
D2549020603400 D2549020603800 D2549020604200 D2549020604400 D2549020604600
D2549020604800 D2549020605000 D2549020605200 D2549020605600 D2549020606400
D2549020606600 D2549020606800 D2549020607000 D2549020607400 D2549020607600
D2549020607800 D2549020608200 D2549020608400 D2549020608600 D2549020609000
D2549020609200 D2549020609400 D2549020609600 D2549020609800 D2549020610200
D2549020610600 D2549020611000 D2549020611200 D2549020611400 D2549020611800
D2549020612000 D2549020612200 D2549020612400 D2549020612600 D2549020612800
D2549020613200 D2549020613600 D2549020613800 D2549020614000 D2549020614600
D2549020701000 D2549020701200 D2549020701400 D2549020701800 D2549020702000
D2549020703200 D2549020703600 D2549020704200 D2549020704600 D2549030500200
D2549030500400 D2549030500600 D2549030500800 D2549030501000 D2549030501200
D2549030501400 D2549030501600 D2549030501800 D2549030502000 D2549030502400
D2549030502600 D2549030502800 D2549030503000 D2549030503400 D2549030503600
D2549030504000 D2549030504200 D2549030504600 D2549030504800 D2549030505200
D2549030505400 D2549030505600 D2549030506000 D2549030506200 D2549030506400
D2549030506600 D2549030507000 D2549030507200 D2549030507400 D2549030507600
D2549030507800 D2549030508200 D2549030508400 D2549030508600 D2549030508800
D2549030509200 D2549030509400 D2549030510600 D2549030510800 D2549030511000
D2549030511200 D2549030511800 R225401107-000 R225401115-002 R225401128-000
R225401133-000 R225401134-000 R225401134-002 R225401134-004 R225401134-006
R225401134-016 R225401136-016 R225401137-000 R225401137-002 R225401137-004

R225401137-010 R225401137-012 R225401139-000 R225401142-000 R225401145-000
R225401146-000 R225401146-002 R225401159-000 R225401160-002 R225401168-004
R225401172-002 R225401172-004 R225401175-000 R225401175-002 R225401176-000
R225401188-000 R225401188-002 R225401188-004 R225401188-006

1. Removal of the Lavatory Attachment

A. General

A complete disassembly of the component is not necessary and not recommended.

Do not disassemble the component more than it is necessary for:

- Cleaning
- Visual Inspection
- Replacement of defective parts.

B. Procedure

WARNING: **BE CAREFUL WHEN YOU USE SOLVENTS/CLEANING AGENTS, SEALANTS AND OTHER MATERIALS. OBEY THE MATERIAL MANUFACTURER'S INSTRUCTIONS AND THE LOCAL REGULATIONS. MAKE SURE THAT THERE IS A GOOD FLOW OF AIR THROUGH THE WORK AREA. DO NOT BREATHE THE FUMES. DO NOT SMOKE. DO NOT USE THESE MATERIALS NEAR A FLAME, SPARKS OR SOURCES OF HEAT. USE PROTECTIVE CLOTHING, GOGGLES AND GLOVES. IF YOU GET ONE OF THESE MATERIALS ON YOUR SKIN OR IN YOUR EYES, FLUSH IT AWAY WITH A FLOW OF CLEAN WATER. IF YOU GET ONE OF THESE MATERIALS IN YOUR MOUTH, GET IMMEDIATE MEDICAL AID. IN GENERAL, THESE MATERIALS ARE POISONOUS, FLAMMABLE AND SKIN IRRITANTS.**

CAUTION: **DO ALL THE WORK ON A CLEAN, SOFT SURFACE TO PREVENT DAMAGE TO THE COMPONENTS.**

SUB TASK 25-41-51-000-077-A01
D2547161903000 D2549010500000 D2549010500400 D2549010500600
D2549010500800 D2549010501000 D2549010501200 D2549010501400
D2549010501600 D2549010501800 D2549010502000 D2549010502200
D2549010502600 D2549010502800 D2549010503200 D2549010503400
D2549010503600 D2549010503800 D2549010504200 D2549010504400
D2549010504600 D2549010504800 D2549010505000 D2549010505200
D2549010505400 D2549010505600 D2549010505800 D2549010506000
D2549010506200 D2549010506400 D2549010506800 D2549010507000
D2549010507200 D2549010507400 D2549010507600 D2549010507800

D2549010508000 D2549010508200 D2549010508400 D2549010508600
D2549010508800 D2549010509000 D2549010509200 D2549010509400
D2549010509600 D2549010509800 D2549010510000 D2549010510400
D2549010510600 D2549010510800 D2549010511000 D2549010511400
D2549010511600 D2549010511800 D2549010512000 D2549010512200
D2549010512400 D2549010513000 D2549010513200 D2549010513400
D2549010513600 D2549010513800 D2549010514000 D2549010514400
D2549010600000 D2549010600200 D2549010600400 D2549010600600
D2549010601000 D2549010601200 D2549010602000 D2549010602400
D2549020500000 D2549020500400 D2549020500600 D2549020500800
D2549020501000 D2549020501200 D2549020501400 D2549020501600
D2549020501800 D2549020502000 D2549020502400 D2549020502600
D2549020502800 D2549020503000 D2549020503200 D2549020503400
D2549020503600 D2549020504000 D2549020504200 D2549020504400
D2549020504600 D2549020504800 D2549020505000 D2549020505200
D2549020506000 D2549020506200 D2549020506400 D2549020506600
D2549020506800 D2549020507000 D2549020600000 D2549020600200
D2549020600400 D2549020600800 D2549020601000 D2549020601400
D2549020601600 D2549020601800 D2549020602000 D2549020602200
D2549020602400 D2549020602800 D2549020603400 D2549020603800
D2549020604200 D2549020604400 D2549020604600 D2549020604800
D2549020605000 D2549020605200 D2549020605600 D2549020606400
D2549020606600 D2549020606800 D2549020607000 D2549020607400
D2549020607600 D2549020607800 D2549020608200 D2549020608400
D2549020608600 D2549020609000 D2549020609200 D2549020609400
D2549020609600 D2549020609800 D2549020610200 D2549020610600
D2549020611000 D2549020611200 D2549020611400 D2549020611800
D2549020612000 D2549020612200 D2549020612400 D2549020612600
D2549020612800 D2549020613200 D2549020613600 D2549020613800
D2549020614000 D2549020614600 D2549020701000 D2549020701200
D2549020701400 D2549020701800 D2549020702000 D2549020703200
D2549020703600 D2549020704200 D2549020704600 D2549030500200
D2549030500400 D2549030500600 D2549030500800 D2549030501000
D2549030501200 D2549030501400 D2549030501600 D2549030501800
D2549030502000 D2549030502400 D2549030502600 D2549030502800
D2549030503000 D2549030503400 D2549030503600 D2549030504000
D2549030504200 D2549030504600 D2549030504800 D2549030505200
D2549030505400 D2549030505600 D2549030506000 D2549030506200
D2549030506400 D2549030506600 D2549030507000 D2549030507200
D2549030507400 D2549030507600 D2549030507800 D2549030508200
D2549030508400 D2549030508600 D2549030508800 D2549030509200
D2549030509400 D2549030510600 D2549030510800 D2549030511000
D2549030511200 D2549030511800 R225401107-000 R225401115-002 R225401128-
000 R225401133-000 R225401134-000 R225401134-002 R225401134-004 R225401134-
006 R225401134-016 R225401136-016 R225401137-000 R225401137-002 R225401137-
004 R225401137-010 R225401137-012 R225401139-000 R225401142-000 R225401145-
000 R225401146-000 R225401146-002 R225401159-000 R225401160-002 R225401168-

004 R225401172-002 R225401172-004 R225401175-000 R225401175-002 R225401176-000 R225401188-000 R225401188-002 R225401188-004 R225401188-006

1. Removal of the Lavatory Attachment (02-1)

   (a) Remove the quick release pins 02-010, the lanyards 02-130, the bushings 02-190 and the strut assembly 02-020 from the lavatory structure.

   (b) Remove the quick release pins 02-010, the lanyards 02-130, the bushings 02-190 and the strut assembly 02-020 from the fitting 02-120.

   (c) Disassemble the strut assemblies02-020 as follows:

      1 Remove the rod end 02-070 and the nut 02-030 from the strut 02-080.

      2 Remove the rod end 02-050, the washer 02-040 and the nut 02-060 from the strut 02-080.

   (d) Remove the bolts 02-090, the screws 02-100, the washers 02-110 and the fitting 02-120 from the lavatory structure.

   (e) Remove the bolts 02-140, the bushings 02-150, 02-160, 02-170 and the packings 02-180.

   (f) Remove the nut 02-200 and the retainer 02-210 from the lavatory structure.

   (g) Remove the bolt 02-220, the washer 02-230, the bushing 02-170 and the packing 02-180.

   (h) Remove the screws 02-260, the washers 02-270, the angles 02-250 and the lanyard 02-340 from the lavatory structure.

   (i) Remove the screw 02-350 and the lanyard 02-340 from the flap 02-240.

   (j) Remove the screws 02-310, the washers 02-320, the nuts 02-330 and the part of the double spring ball catches 02-280 from the angles 02-250.

   (k) Remove the screws 02-290, the washers 02-300 and the part of the double spring ball catches 02-280 from the flap 02-240.

SUB TASK 25-41-51-000-077-B01
D2549020510800

2. Removal of the Lavatory Attachment (02-1)

(a) Remove the quick release pins 02-010, the lanyards 02-130, the bushings 02-190 and the strut assembly 02-020 from the lavatory structure.

(b) Remove the quick release pins 02-010, the lanyards 02-130, the bushings 02-190 and the strut assembly 02-020 from the fitting 02-120.

(c) Disassemble the strut assemblies02-020 as follows:

1 Remove the rod end 02-070 and the nut 02-030 from the strut 02-080.

2 Remove the rod end 02-050, the washer 02-040 and the nut 02-060 from the strut 02-080.

(d) Remove the bolts 02-090, 02-095 and the fitting 02-120 from the lavatory structure.

(e) Remove the bolts 02-140, the bushings 02-150, 02-160, 02-170 and the packings 02-180.

(f) Remove the nut 02-200 and the retainer 02-210 from the lavatory structure.

(g) Remove the bolt 02-220, the washer 02-230, the bushing 02-170 and the packing 02-180.

(h) Remove the screws 02-260, the washers 02-270, the angles 02-250 and the lanyard 02-340 from the lavatory structure.

(i) Remove the screw 02-350 and the lanyard 02-340 from the flap 02-240.

(j) Remove the screws 02-310, the washers 02-320, the nuts 02-330 and the part of the double spring ball catches 02-280 from the angles 02-250.

(k) Remove the screws 02-290, the washers 02-300 and the part of the double spring ball catches 02-280 from the flap 02-240.

TASK 25-41-51-000-801-B01

D2549010402600 D2549010514600 D2549010514800 D2549010600800 D2549010601400
D2549010601600 D2549010602200 D2549010602600 D2549010602800 D2549010603000
D2549010603200 D2549010603400 D2549010603800 D2549010604000 D2549010604200
D2549010604400 D2549010604600 D2549010604800 D2549010605000 D2549010605200
D2549010605600 D2549010605800 D2549010606000 D2549010606200 D2549010606400
D2549010606600 D2549010606800 D2549010607000 D2549010607200 D2549010607800
D2549010608200 D2549010608400 D2549010609400 D2549020407200 D2549020502200
D2549020505600 D2549020507200 D2549020507400 D2549020507600 D2549020508000
D2549020508400 D2549020508600 D2549020508800 D2549020509000 D2549020509200
D2549020509600 D2549020509800 D2549020510000 D2549020511000 D2549020511800
D2549020512000 D2549020512600 D2549020513600 D2549020514200 D2549020514400
D2549020514600 D2549020700000 D2549020700200 D2549020700400 D2549020700600
D2549020701600 D2549020702200 D2549020702400 D2549020702600 D2549020702800
D2549020703400 D2549020703800 D2549020704400 D2549020704800 D2549020705000
D2549020705200 D2549020705400 D2549020706000 D2549020706200 D2549020706600
D2549020706800 D2549020707000 D2549020707200 D2549020707400 D2549020707600
D2549020707800 D2549020708200 D2549020708600 D2549020708800 D2549020709000
D2549020709800 D2549020710000 D2549020710200 D2549020710400 D2549020710600
D2549020710800 D2549020711200 D2549020711400 D2549020712000 D2549020712200
D2549020712600 D2549020713000 D2549020713200 D2549020713400 D2549020713600
D2549020713800 D2549020714600 D2549030503800 D2549030508000 D2549030509800
D2549030510000 D2549030510200 D2549030510400 D2549030511400 D2549030512000
D2549030512400 D2549030512800 D2549030513000 D2549030513200 D2549030513400
D2549030513600 D2549030513800 D2549030514200 D2549030514600 D2549030514800
D2549030600200 D2549030600400 D2549030600600 D2549030600800 D2549030601000
D2549030601400 D2549030601800 D2549030602000 D2549030602200 D2549030602600
D2549030602800 D2549030603000 D2549030603600 D2549030603800 D2549030604400
D2549030604800 D2549030605000 D2549030605600 D2549030605800 D2549030606200
D2549030606600 D2549030606800 D2549030607200 D2549030608600 D2549030609000
D2549030609200 D2549030610200 D2549030611600 D2549030611800 D2549030614000
D2549030614200 D2549030614400 R225401115-000 R225401134-018 R225401134-020
R225401134-022 R225401136-000 R225401136-010 R225401136-020 R225401136-022
R225401137-006 R225401137-008 R225401137-014 R225401142-002 R225401145-002
R225401145-004 R225401145-006 R225401145-012 R225401152-000 R225401152-002
R225401152-004 R225401152-006 R225401153-000 R225401160-000 R225401168-006
R225401168-016 R225401168-018 R225401172-006 R225401172-008 R225401172-010
R225401172-012 R225401172-014 R225401172-016 R225401183-000 R225401183-002
R225401183-008 R225401192-000 R225401195-000 R225401196-000 R225401196-002
R225401196-004 R225401196-034 R225401196-036 R225401196-046 R225401196-048
R225401196-050 R225401600-000 R225401600-002 R225401603-000 R225401605-000
R225401605-002 R225401613-000 R225401618-000 R225401618-002 R225401619-000
R225401619-002 R225401625-000

2. Removal of the Lavatory Attachment

A. General

A complete disassembly of the component is not necessary and not recommended.

Do not disassemble the component more than it is necessary for:

- Cleaning
- Visual Inspection
- Replacement of defective parts.

B. Procedure

WARNING: **BE CAREFUL WHEN YOU USE SOLVENTS/CLEANING AGENTS, SEALANTS AND OTHER MATERIALS. OBEY THE MATERIAL MANUFACTURER'S INSTRUCTIONS AND THE LOCAL REGULATIONS. MAKE SURE THAT THERE IS A GOOD FLOW OF AIR THROUGH THE WORK AREA. DO NOT BREATHE THE FUMES. DO NOT SMOKE. DO NOT USE THESE MATERIALS NEAR A FLAME, SPARKS OR SOURCES OF HEAT. USE PROTECTIVE CLOTHING, GOGGLES AND GLOVES. IF YOU GET ONE OF THESE MATERIALS ON YOUR SKIN OR IN YOUR EYES, FLUSH IT AWAY WITH A FLOW OF CLEAN WATER. IF YOU GET ONE OF THESE MATERIALS IN YOUR MOUTH, GET IMMEDIATE MEDICAL AID. IN GENERAL, THESE MATERIALS ARE POISONOUS, FLAMMABLE AND SKIN IRRITANTS.**

CAUTION: **DO ALL THE WORK ON A CLEAN, SOFT SURFACE TO PREVENT DAMAGE TO THE COMPONENTS.**

SUB TASK 25-41-51-000-079-A01

1. Removal of the Lavatory Attachment (02A-1)

   (a) Remove the quick release pin 02A-010, the lanyard 02A-130 and the strut assembly 02A-020 from the lavatory structure.

   (b) Remove the quick release pin 02A-010, the lanyard 02A-130 and the strut assembly 02A-020 from the fitting 02A-120.

   (c) Disassemble the strut assemblies 02A-020 as follows:

      1 Remove the rod end 02A-070 and the nut 02A-030 from the strut 02A-080.

      2 Remove the rod end 02A-050, the washer 02A-040 and the nut 02A-060 from the strut 02A-080.

(d) Remove the bolts 02A-090, the screws 02A-100, 02A-102, 02A-104, the washers 02A-110 and the fitting 02A-120 from the lavatory structure.

(e) Remove the bolts 02A-140, the bushings 02A-150, 02A-160, 02A-170 and the packings 02A-180.

(f) Remove the nut 02A-200 and the retainer 02A-210 from the lavatory structure.

(g) Remove the bolt 02A-220, the washer 02A-230, the bushing 02A-170 and the packing 02A-180.

(h) Remove the screws 02A-260, the washers 02A-270, the angles 02A-250 and the lanyard 02A-340 from the lavatory structure.

(i) Remove the screw 02A-350 and the lanyard 02A-340 from the flap 02A-240.

(j) Remove the screws 02A-310, the washers 02A-320, the nuts 02A-330 and the part of the double spring ball catches 02A-280 from the angles 02A-250.

(k) Remove the screws 02A-290, the washers 02A-300 and the part of the double spring ball catches 02A-280 from the flap 02A-240.

TASK 25-41-51-000-801-C01

D2549010401600 D2549010402400 D2549010403200 D2549010404200 D2549010405200
D2549010405600 D2549010406000 D2549010406200 D2549010607400 D2549010614200
D2549020300000 D2549020301000 D2549020301600 D2549020302000 D2549020400800
D2549020401400 D2549020402600 D2549020409200 D2549020409800 D2549020410400
D2549020410600 D2549020411000 D2549020411400 D2549020411600 D2549020411800
D2549020412200 D2549020413000 D2549020414000 D2549020414200 D2549020414800
D2549020508200 D2549020708000 D2549020709400 D2549020714400 D2549020807200
D2549030411200 D2549030412600 D2549030412800 D2549030413000 D2549030413200
D2549030414000 D2549030604200 D2549030607000 D2549030607400 D2549030608200
D2549030608800 D2549030610600 D2549030611200 D2549030700000 D2549030700200
D2549030700400 D2549030700600 D2549030700800 D2549030701200 D2549030701800
D2549030702400 D2549030702800 D2549030703800 D2549030704800 D2549040500400
D2549040500800 D2549040501000 D2549040501200 D2549040501600 R225401134-008
R225401134-024 R225401134-026 R225401196-018 R225401196-064 R225401611-000
R225401611-014 R225401611-016 R225401611-018 R225401627-000 R225401627-002
R225401627-004 R225401671-000 R225401671-002 R225401673-002 R225401673-004
R225401685-000 R225401689-004 R225401691-000 R225401691-002 R225401697-000
R225401697-002 R225401808-000 R225401814-000

3. Removal of the Lavatory Attachment

A. General

A complete disassembly of the component is not necessary and not recommended.

Do not disassemble the component more than it is necessary for:

- Cleaning
- Visual Inspection
- Replacement of defective parts.

B. Procedure

WARNING: **BE CAREFUL WHEN YOU USE SOLVENTS/CLEANING AGENTS, SEALANTS AND OTHER MATERIALS. OBEY THE MATERIAL MANUFACTURER'S INSTRUCTIONS AND THE LOCAL REGULATIONS. MAKE SURE THAT THERE IS A GOOD FLOW OF AIR THROUGH THE WORK AREA. DO NOT BREATHE THE FUMES. DO NOT SMOKE. DO NOT USE THESE MATERIALS NEAR A FLAME, SPARKS OR SOURCES OF HEAT. USE PROTECTIVE CLOTHING, GOGGLES AND GLOVES. IF YOU GET ONE OF THESE MATERIALS ON YOUR SKIN OR IN YOUR EYES, FLUSH IT AWAY WITH A FLOW OF CLEAN WATER. IF YOU GET ONE OF THESE MATERIALS IN YOUR MOUTH, GET IMMEDIATE MEDICAL AID. IN GENERAL, THESE MATERIALS ARE POISONOUS, FLAMMABLE AND SKIN IRRITANTS.**

CAUTION: **DO ALL THE WORK ON A CLEAN, SOFT SURFACE TO PREVENT DAMAGE TO THE COMPONENTS.**

SUB TASK 25-41-51-000-078-A01

1. Removal of the Lavatory Attachment (02B-1)

   (a) Remove the quick release pin 02B-010, the lanyard 02B-130 and the strut assembly 02B-020 from the lavatory structure.

   (b) Remove the quick release pin 02B-010, the lanyard 02B-130 and the strut assembly 02B-020 from the fitting 02B-120.

   (c) Disassemble the strut assemblies 02B-020 as follows:

      1 Remove the rod end 02B-070 and the nut 02B-030 from the strut 02B-080.

      2 Remove the rod end 02B-050, the washer 02B-040 and the nut 02B-060 from the strut 02B-080.

   (d) Remove the bolts 02B-090, the screws 02B-100, the washers 02B-110 and the fitting 02B-120 from the lavatory structure.

   (e) Remove the bolts 02B-140, the bushings 02B-150, 02B-160, 02B-170 and the packings 02B-180.

   (f) Remove the nut 02B-190 and the retainer 02B-200 from the lavatory structure.

   (g) Remove the bolt 02B-210, the washer 02B-220, the bushing 02B-170 and the packing 02B-180.

   (h) Remove the screws 02B-250, the washers 02B-260, the angles 02B-240 and the lanyard 02B-330 from the lavatory structure.

(i) Remove the screw 02B-340 and the lanyard 02B-330 from the flap 02B-230.

(j) Remove the screws 02B-300, the washers 02B-310, the nuts 02B-320 and the part of the double spring ball catches 02B-270 from the angles 02B-240.

(k) Remove the screws 02B-280, the washers 02B-290 and the part of the double spring ball catches 02B-270 from the flap 02B-230.

TASK 25-41-51-000-801-D01

D2547160900200 D2547160900400 D2549010400000 D2549010400200 D2549010400400
D2549010400600 D2549010400800 D2549010401000 D2549010401400 D2549010401800
D2549010402000 D2549010402200 D2549010402800 D2549010403000 D2549010403400
D2549010403600 D2549010403800 D2549010404000 D2549010404400 D2549010404600
D2549010404800 D2549010607600 D2549010608600 D2549010608800 D2549010609000
D2549010609200 D2549010609600 D2549010609800 D2549010610000 D2549010610200
D2549010610400 D2549010610600 D2549010610800 D2549010611000 D2549010611200
D2549010611400 D2549010611600 D2549010611800 D2549010612000 D2549010612200
D2549010612400 D2549010612600 D2549010613000 D2549010613200 D2549010613400
D2549010613800 D2549010614400 D2549010614600 D2549010614800 D2549020400000
D2549020400200 D2549020400400 D2549020400600 D2549020401000 D2549020401200
D2549020401600 D2549020402000 D2549020402200 D2549020402400 D2549020403000
D2549020403200 D2549020403400 D2549020403600 D2549020403800 D2549020404000
D2549020404200 D2549020404400 D2549020404600 D2549020404800 D2549020405000
D2549020405200 D2549020405400 D2549020405600 D2549020405800 D2549020406000
D2549020406200 D2549020406400 D2549020406600 D2549020406800 D2549020407000
D2549020407400 D2549020407600 D2549020407800 D2549020408000 D2549020408200
D2549020408600 D2549020408800 D2549020409000 D2549020409400 D2549020409600
D2549020410200 D2549020510400 D2549020510600 D2549020511200 D2549020511600
D2549020512400 D2549020512800 D2549020513200 D2549020513400 D2549020513800
D2549020514800 D2549020601200 D2549020711600 D2549020800000 D2549020800200
D2549020800400 D2549020800600 D2549020801000 D2549020801400 D2549020801800
D2549020802000 D2549020802200 D2549020802400 D2549020802600 D2549020802800
D2549020803000 D2549020803200 D2549020803400 D2549020803600 D2549020804000
D2549020804200 D2549020804400 D2549020804800 D2549020805200 D2549020805400
D2549020805600 D2549020805800 D2549020806000 D2549020806400 D2549020806600
D2549020806800 D2549020807400 D2549020807600 D2549020807800 D2549020808400
D2549020808600 D2549020809000 D2549020809400 D2549020809600 D2549020810000
D2549020810200 D2549020810400 D2549020810600 D2549020810800 D2549020811200
D2549020811400 D2549020811600 D2549020811800 D2549020812000 D2549020812200
D2549020812400 D2549020812600 D2549020812800 D2549020813000 D2549020813200
D2549020813400 D2549020813600 D2549020813800 D2549020814000 D2549020814200
D2549020814400 D2549020814600 D2549020814800 D2549030400000 D2549030400200
D2549030400400 D2549030400600 D2549030401200 D2549030401800 D2549030402000
D2549030402200 D2549030402400 D2549030402600 D2549030402800 D2549030403400
D2549030403600 D2549030403800 D2549030404000 D2549030404200 D2549030404400
D2549030404600 D2549030404800 D2549030405000 D2549030405200 D2549030405400
D2549030405800 D2549030406000 D2549030406400 D2549030406600 D2549030406800
D2549030407000 D2549030407200 D2549030407400 D2549030407600 D2549030407800
D2549030408000 D2549030408200 D2549030408400 D2549030408600 D2549030409000
D2549030409400 D2549030409600 D2549030409800 D2549030410000 D2549030410200
D2549030410400 D2549030410600 D2549030411400 D2549030411600 D2549030411800
D2549030412000 D2549030412200 D2549030412400 D2549030413600 D2549030414400
D2549030414800 D2549030601600 D2549030603200 D2549030607800 D2549030608000
D2549030609800 D2549030610400 D2549030611000 D2549030612200 D2549030612400
D2549030612600 D2549030612800 D2549030613200 D2549030613400 D2549030613600

D2549030613800 D2549030614600 D2549030614800 D2549040500200 D2549040500600
R225401134-010 R225401134-012 R225401134-014 R225401134-028 R225401134-030
R225401134-032 R225401134-034 R225401134-036 R225401134-038 R225401136-004
R225401136-012 R225401136-018 R225401136-024 R225401137-016 R225401145-008
R225401145-010 R225401145-014 R225401152-008 R225401152-010 R225401168-000
R225401168-002 R225401168-008 R225401168-010 R225401168-012 R225401168-014
R225401168-020 R225401168-022 R225401168-024 R225401168-026 R225401168-028
R225401172-000 R225401172-018 R225401183-004 R225401183-006 R225401192-002
R225401196-006 R225401196-008 R225401196-010 R225401196-012 R225401196-014
R225401196-016 R225401196-020 R225401196-022 R225401196-038 R225401196-040
R225401196-042 R225401196-044 R225401196-052 R225401196-054 R225401196-056
R225401196-058 R225401196-060 R225401196-062 R225401196-066 R225401196-068
R225401199-006 R225401199-010 R225401199-012 R225401600-004 R225401602-000
R225401611-006 R225401611-012 R225401614-000 R225401622-000 R225401622-002
R225401624-000 R225401629-000 R225401629-002 R225401639-000 R225401639-002
R225401643-000 R225401643-002 R225401643-004 R225401643-006 R225401643-008
R225401646-000 R225401646-002 R225401647-000 R225401648-000 R225401648-002
R225401648-004 R225401648-006 R225401648-008 R225401649-000 R225401656-000
R225401656-002 R225401658-000 R225401662-000 R225401662-002 R225401673-000
R225401675-000 R225401676-000 R225401683-000 R225401685-002 R225401688-000
R225401693-000

4. Removal of the Lavatory Attachment

A. General

A complete disassembly of the component is not necessary and not recommended.

Do not disassemble the component more than it is necessary for:

- Cleaning
- Visual Inspection
- Replacement of defective parts.

B. Procedure

WARNING: **BE CAREFUL WHEN YOU USE SOLVENTS/CLEANING AGENTS, SEALANTS AND OTHER MATERIALS. OBEY THE MATERIAL MANUFACTURER'S INSTRUCTIONS AND THE LOCAL REGULATIONS. MAKE SURE THAT THERE IS A GOOD FLOW OF AIR THROUGH THE WORK AREA. DO NOT BREATHE THE FUMES. DO NOT SMOKE. DO NOT USE THESE MATERIALS NEAR A FLAME, SPARKS OR SOURCES OF HEAT. USE PROTECTIVE CLOTHING, GOGGLES AND GLOVES. IF YOU GET ONE OF THESE MATERIALS ON YOUR SKIN OR IN YOUR EYES, FLUSH IT AWAY WITH A FLOW OF CLEAN WATER. IF YOU GET ONE OF THESE MATERIALS IN YOUR MOUTH, GET IMMEDIATE MEDICAL AID. IN GENERAL, THESE MATERIALS ARE POISONOUS, FLAMMABLE AND SKIN IRRITANTS.**

CAUTION: **DO ALL THE WORK ON A CLEAN, SOFT SURFACE TO PREVENT DAMAGE TO THE COMPONENTS.**

SUB TASK 25-41-51-000-080-A01

1. Removal of the Lavatory Attachment (02C-1)

   (a) Remove the quick release pin 02C-010, the lanyard 02C-110 and the strut assembly 02C-020 from the lavatory structure.

   (b) Remove the quick release pin 02C-010, the lanyard 02C-110 and the strut assembly 02C-020 from the fitting 02C-100.

   (c) Disassemble the strut assemblies 02C-020 as follows:

      1 Remove the rod end 02C-070 and the nut 02C-030 from the strut 02C-080.

      2 Remove the rod end 02C-050, the washer 02C-040 and the nut 02C-060 from the strut 02C-080.

   (d) Remove the bolts 02C-090, the screws 02C-92, 02C-94, the washers 02C-96 and the fitting 02C-100 from the lavatory structure.

   (e) Remove the bolts 02C-130, 02C-135, the bushings 02C-140, 02C-150, 02C-160 and the packings 02C-170.

   (f) Remove the nut 02C-180 and the retainer 02C-190 from the lavatory structure.

   (g) Remove the bolt 02C-200, the washer 02C-210, the bushing 02C-160 and the packing 02C-170.

   (h) Remove the screws 02C-240, the washers 02C-250, the angles 02C-230 and the lanyard 02C-320 from the lavatory structure.

(i) Remove the screw 02C-330 and the lanyard 02C-320 from the flap 02C-220.

(j) Remove the screws 02C-290, the washers 02C-300, the nuts 02C-310 and the part of the double spring ball catches 02C-260 from the angles 02C-230.

(k) Remove the screws 02C-270, the washers 02C-280 and the part of the double spring ball catches 02C-260 from the flap 02C-220.

TASK 25-41-51-000-801-E01

D2549010405000 D2549010405400 D2549010405800 D2549010406400 D2549010406800 D2549010407000 D2549010502400 D2549010511200 D2549010512600 D2549010514200 D2549010601800 D2549010603600 D2549010613600 D2549020300400 D2549020300600 D2549020300800 D2549020301800 D2549020302800 D2549020410800 D2549020411200 D2549020412000 D2549020412400 D2549020412600 D2549020412800 D2549020413200 D2549020413400 D2549020413600 D2549020413800 D2549020414600 D2549020500200 D2549020503800 D2549020505400 D2549020505800 D2549020507800 D2549020512200 D2549020513000 D2549020514000 D2549020602600 D2549020603000 D2549020603200 D2549020603600 D2549020604000 D2549020605400 D2549020605800 D2549020606000 D2549020607200 D2549020608800 D2549020610000 D2549020610400 D2549020610800 D2549020611600 D2549020613000 D2549020614400 D2549020614800 D2549020700800 D2549020704000 D2549020705600 D2549020705800 D2549020706400 D2549020708400 D2549020709200 D2549020709600 D2549020711000 D2549020712400 D2549020712800 D2549020714000 D2549020800800 D2549020801200 D2549020801600 D2549020803800 D2549020805000 D2549020806200 D2549020807000 D2549020808200 D2549020808800 D2549020809800 D2549030401000 D2549030401400 D2549030401600 D2549030403000 D2549030405600 D2549030409200 D2549030410800 D2549030413400 D2549030414200 D2549030414600 D2549030502200 D2549030503200 D2549030505800 D2549030506800 D2549030509000 D2549030509600 D2549030511600 D2549030512200 D2549030514000 D2549030514400 D2549030600000 D2549030601200 D2549030602400 D2549030603400 D2549030604600 D2549030605200 D2549030605400 D2549030606000 D2549030606400 D2549030607600 D2549030608400 D2549030610000 D2549030611400 D2549030612000 D2549030701000 D2549030701400 D2549030701600 D2549030702000 D2549030702200 D2549030702600 D2549030703000 D2549030703200 D2549030703400 D2549030703600 D2549030704000 D2549030704200 D2549030704400 D2549030704600 D2549030705200 D2549030705600 D2549040501400 D2549040501800 D2549040502000 R225401107-002 R225401136-006 R225401136-008 R225401136-014 R225401196-024 R225401196-070 R225401199-000 R225401199-002 R225401199-004 R225401199-008 R225401609-000 R225401611-008 R225401611-010 R225401611-020 R225401673-006 R225401689-006 R225401803-000 R225401803-002 R225401811-000

5. Removal of the Lavatory Attachment

A. General

A complete disassembly of the component is not necessary and not recommended.

Do not disassemble the component more than it is necessary for:

- Cleaning
- Visual Inspection
- Replacement of defective parts.

B. Procedure

WARNING: **BE CAREFUL WHEN YOU USE SOLVENTS/CLEANING AGENTS, SEALANTS AND OTHER MATERIALS. OBEY THE MATERIAL MANUFACTURER'S INSTRUCTIONS AND THE LOCAL REGULATIONS. MAKE SURE THAT THERE IS A GOOD FLOW OF AIR THROUGH THE WORK AREA. DO NOT BREATHE THE FUMES. DO NOT SMOKE. DO NOT USE THESE MATERIALS NEAR A FLAME, SPARKS OR SOURCES OF HEAT. USE PROTECTIVE CLOTHING, GOGGLES AND GLOVES. IF YOU GET ONE OF THESE MATERIALS ON YOUR SKIN OR IN YOUR EYES, FLUSH IT AWAY WITH A FLOW OF CLEAN WATER. IF YOU GET ONE OF THESE MATERIALS IN YOUR MOUTH, GET IMMEDIATE MEDICAL AID. IN GENERAL, THESE MATERIALS ARE POISONOUS, FLAMMABLE AND SKIN IRRITANTS.**

CAUTION: **DO ALL THE WORK ON A CLEAN, SOFT SURFACE TO PREVENT DAMAGE TO THE COMPONENTS.**

SUB TASK 25-41-51-000-082-A01
D2549020302800 D2549020714000 D2549020806200 D2549020807000 R225401609-000

1. Removal of the Lavatory Attachment (02D-1)

   (a) Remove the quick release pin 02D-010, the lanyard 02D-110 and the strut assembly 02D-020 from the lavatory structure.

   (b) Remove the quick release pin 02D-010, the lanyard 02D-110 and the strut assembly 02D-020 from the fitting 02D-100.

   (c) Disassemble the strut assemblies 02D-020 as follows:

      1 Remove the rod end 02D-070 and the nut 02D-030 from the strut 02D-080.

      2 Remove the rod end 02D-050, the washer 02D-040 and the nut 02D-060 from the strut 02D-080.

   (d) Remove the bolts 02D-090, 02D-095 and the fitting 02D-100 from the lavatory structure.

(e) Remove the bolts 02D-120, 02D-125, the bushings 02D-130, 02D-140, 02D-150 and the packings 02D-160.

(f) Remove the nut 02D-170 and the retainer 02D-180 from the lavatory structure.

(g) Remove the bolt 02D-190, the washer 02D-200, the bushing 02D-150 and the packing 02D-160.

(h) Remove the screws 02D-260, the washers 02D-240, the nuts 02D-270 and the flap 02D-215 from the angles 02D-220.

(i) Remove the screws 02D-230, the washers 02D-240 and the angles 02D-220 from the lavatory structure.

(j) Remove screws 02D-230, the washers 02D-240 and the angles 02D-220 from the flap 02D-215.

SUB TASK 25-41-51-000-082-B01
D2549010405000 D2549010405400 D2549010405800 D2549010406400 D2549010406800 D2549010407000 D2549010514200 D2549010613600 D2549020300400 D2549020300600 D2549020300800 D2549020301800 D2549020410800 D2549020411200 D2549020412000 D2549020412400 D2549020412600 D2549020412800 D2549020413200 D2549020413400 D2549020413600 D2549020413800 D2549020414600 D2549020603200 D2549020608800 D2549020706400 D2549020800800 D2549020801200 D2549020801600 D2549020803800 D2549020805000 D2549020808200 D2549020808800 D2549020809800 D2549030401400 D2549030401600 D2549030403000 D2549030405600 D2549030409200 D2549030410800 D2549030413400 D2549030414200 D2549030414600 D2549030610000 D2549030612000 D2549030701000 D2549030701400 D2549030701600 D2549030702000 D2549030702200 D2549030702600 D2549030703000 D2549030703200 D2549030703400 D2549030703600 D2549030704000 D2549030704200 D2549030704400 D2549030704600 D2549030705200 D2549030705600 D2549040501400 D2549040501800 D2549040502000 R225401136-006 R225401136-008 R225401136-014 R225401199-004 R225401199-008 R225401611-010 R225401611-020 R225401673-006 R225401689-006 R225401803-000 R225401803-002 R225401811-000

2. Removal of the Lavatory Attachment (02D-1)

(a) Remove the quick release pin 02D-010, the lanyard 02D-110 and the strut assembly 02D-020 from the lavatory structure.

(b) Remove the quick release pin 02D-010, the lanyard 02D-110 and the strut assembly 02D-020 from the fitting 02D-100.

(c) Disassemble the strut assemblies 02D-020 as follows:

1 Remove the rod end 02D-070 and the nut 02D-030 from the strut 02D-080.

2 Remove the rod end 02D-050, the washer 02D-040 and the nut 02D-060 from the strut 02D-080.

(d) Remove the bolts 02D-090, 02D-095 and the fitting 02D-100 from the lavatory structure.

(e) Remove the bolts 02D-120, 02D-125, the bushings 02D-130, 02D-140, 02D-150 and the packings 02D-160.

(f) Remove the nut 02D-170 and the retainer 02D-180 from the lavatory structure.

(g) Remove the bolt 02D-190, the washer 02D-200, the bushing 02D-150 and the packing 02D-160.

(h) Remove the screws 02D-231, the washers 02D-241, the angles 02D-221 and the lanyard 02D-340 from the lavatory structure.

(i) Remove the screw 02D-350 and the lanyard 02D-340 from the flap 02D-210.

(j) Remove the screws 02D-310, the washers 02D-320, the nuts 02D-330 and the part of the double spring ball catches 02D-280 from the angles 02D-221.

(k) Remove the screws 02D-290, the washers 02D-300 and the part of the double spring ball catches 02D-280 from the flap 02D-210.

SUB TASK 25-41-51-000-082-C01

D2549010502400 D2549010601800 D2549010603600 D2549020512200
D2549020513000 D2549020514000 D2549020602600 D2549020603000
D2549020606000 D2549020614800 D2549020700800 D2549020705600
D2549020705800 D2549020709200 D2549020709600 D2549020711000
D2549020712400 D2549020712800 D2549030401000 D2549030503200
D2549030512200 D2549030514000 D2549030600000 D2549030601200
D2549030602400 D2549030603400 D2549030604600 D2549030605200
D2549030605400 D2549030606000 D2549030606400 D2549030607600
D2549030608400 D2549030611400 R225401199-002 R225401611-008

3. Removal of the Lavatory Attachment (02D-1)

(a) Remove the quick release pin 02D-010, the lanyard 02D-110 and the strut assembly 02D-020 from the lavatory structure.

(b) Remove the quick release pin 02D-010, the lanyard 02D-110 and the strut assembly 02D-020 from the fitting 02D-100.

(c) Disassemble the strut assemblies 02D-020 as follows:

1 Remove the rod end 02D-070 and the nut 02D-030 from the strut 02D-080.

2 Remove the rod end 02D-050, the washer 02D-040 and the nut 02D-060 from the strut 02D-080.

(d) Remove the bolts 02D-090, the screws 02D-360, the washers 02D-370 and the fitting 02D-100 from the lavatory structure.

(e) Remove the bolts 02D-120, 02D-125, the bushings 02D-130, 02D-140, 02D-150 and the packings 02D-160.

(f) Remove the nut 02D-170 and the retainer 02D-180 from the lavatory structure.

(g) Remove the bolt 02D-190, the washer 02D-200, the bushing 02D-150 and the packing 02D-160.

(h) Remove the screws 02D-231, the washers 02D-241, the angles 02D-221 and the lanyard 02D-340 from the lavatory structure.

(i) Remove the screw 02D-350 and the lanyard 02D-340 from the flap 02D-210.

(j) Remove the screws 02D-310, the washers 02D-320, the nuts 02D-330 and the part of the double spring ball catches 02D-280 from the angles 02D-221.

(k) Remove the screws 02D-290, the washers 02D-300 and the part of the double spring ball catches 02D-280 from the flap 02D-210.

SUB TASK 25-41-51-000-082-D01
D2549010511200 D2549010512600 D2549020500200 D2549020503800 D2549020505400 D2549020505800 D2549020507800 D2549020603600 D2549020604000 D2549020605400 D2549020605800 D2549020607200 D2549020610000 D2549020610400 D2549020610800 D2549020611600 D2549020613000 D2549020614400 D2549020704000 D2549020708400 D2549030502200 D2549030505800 D2549030506800 D2549030509000 D2549030509600 D2549030511600 D2549030514400 R225401107-002

4. Removal of the Lavatory Attachment (02D-1)

(a) Remove the quick release pin 02D-010, the lanyard 02D-110 and the strut assembly 02D-020 from the lavatory structure.

(b) Remove the quick release pin 02D-010, the lanyard 02D-110 and the strut assembly 02D-020 from the fitting 02D-100.

(c) Disassemble the strut assemblies 02D-020 as follows:

1 Remove the rod end 02D-070 and the nut 02D-030 from the strut 02D-080.

2 Remove the rod end 02D-050, the washer 02D-040 and the nut 02D-060 from the strut 02D-080.

(d) Remove the bolts 02D-090, 02D-095, the screws 02D-360, the washers 02D-370 and the fitting 02D-100 from the lavatory structure.

(e) Remove the bolts 02D-120, 02D-125, the bushings 02D-130, 02D-140, 02D-150 and the packings 02D-160.

(f) Remove the nut 02D-170 and the retainer 02D-180 from the lavatory structure.

(g) Remove the bolt 02D-190, the washer 02D-200, the bushing 02D-150 and the packing 02D-160.

(h) Remove the screws 02D-231, the washers 02D-241, the angles 02D-221 and the lanyard 02D-340 from the lavatory structure.

(i) Remove the screw 02D-350 and the lanyard 02D-340 from the flap 02D-210.

(j) Remove the screws 02D-310, the washers 02D-320, the nuts 02D-330 and the part of the double spring ball catches 02D-280 from the angles 02D-221.

(k) Remove the screws 02D-290, the washers 02D-300 and the part of the double spring ball catches 02D-280 from the flap 02D-210.

TASK 25-41-51-000-801-F01
D2549010510200 R225401107-004

6. Removal of the Lavatory Attachment

A. General

- Not applicable

B. Procedure

SUB TASK 25-41-51-000-107-A01
1. Removal of the Lavatory Attachment

(a) Not applicable.

TASK 25-41-51-000-802-A01

D2547160900200 D2547160900400 D2547161903000 D2549010400000 D2549010400200
D2549010400400 D2549010400600 D2549010400800 D2549010401000 D2549010401400
D2549010402000 D2549010402200 D2549010402400 D2549010402600 D2549010402800
D2549010403000 D2549010403200 D2549010403400 D2549010403600 D2549010403800
D2549010404000 D2549010404200 D2549010404400 D2549010404600 D2549010404800
D2549010405000 D2549010405400 D2549010405800 D2549010406000 D2549010406200
D2549010406400 D2549010406800 D2549010407000 D2549010500000 D2549010500400
D2549010500600 D2549010500800 D2549010501000 D2549010501200 D2549010501400
D2549010501600 D2549010501800 D2549010502000 D2549010502200 D2549010502400
D2549010502600 D2549010502800 D2549010503200 D2549010503400 D2549010503600
D2549010503800 D2549010504200 D2549010504400 D2549010504600 D2549010504800
D2549010505000 D2549010505200 D2549010505400 D2549010505600 D2549010505800
D2549010506000 D2549010506200 D2549010506400 D2549010506800 D2549010507000
D2549010507200 D2549010507400 D2549010507600 D2549010507800 D2549010508000
D2549010508200 D2549010508400 D2549010508600 D2549010508800 D2549010509000
D2549010509200 D2549010509400 D2549010509600 D2549010509800 D2549010510000
D2549010510200 D2549010510400 D2549010510600 D2549010510800 D2549010511000
D2549010511200 D2549010511400 D2549010511600 D2549010511800 D2549010512000
D2549010512200 D2549010512400 D2549010512600 D2549010513000 D2549010513200
D2549010513400 D2549010513600 D2549010513800 D2549010514000 D2549010514200
D2549010514400 D2549010514600 D2549010514800 D2549010600000 D2549010600200
D2549010600400 D2549010600600 D2549010600800 D2549010601000 D2549010601200
D2549010601400 D2549010601600 D2549010601800 D2549010602000 D2549010602200
D2549010602400 D2549010602600 D2549010602800 D2549010603000 D2549010603200
D2549010603400 D2549010603600 D2549010603800 D2549010604000 D2549010604200
D2549010604400 D2549010604600 D2549010604800 D2549010605000 D2549010605200
D2549010605600 D2549010605800 D2549010606000 D2549010606200 D2549010606400
D2549010606600 D2549010606800 D2549010607000 D2549010607200 D2549010607400
D2549010607600 D2549010607800 D2549010608200 D2549010608400 D2549010608600
D2549010608800 D2549010609000 D2549010609200 D2549010609400 D2549010609600
D2549010609800 D2549010610000 D2549010610200 D2549010610400 D2549010610600
D2549010610800 D2549010611000 D2549010611200 D2549010611600 D2549010611800
D2549010612000 D2549010612200 D2549010612400 D2549010612600 D2549010613000
D2549010613200 D2549010613400 D2549010613600 D2549010613800 D2549010614200
D2549010614400 D2549010614600 D2549010614800 D2549020300400 D2549020300600
D2549020300800 D2549020301000 D2549020301800 D2549020302000 D2549020302800
D2549020400000 D2549020400200 D2549020400400 D2549020400600 D2549020400800
D2549020401000 D2549020401200 D2549020401400 D2549020401600 D2549020402000
D2549020402200 D2549020402400 D2549020402600 D2549020403200 D2549020403400
D2549020403600 D2549020403800 D2549020404000 D2549020404200 D2549020404400
D2549020404600 D2549020404800 D2549020405000 D2549020405200 D2549020405400
D2549020405600 D2549020405800 D2549020406000 D2549020406200 D2549020406400
D2549020406600 D2549020406800 D2549020407000 D2549020407200 D2549020407400
D2549020407600 D2549020407800 D2549020408000 D2549020408200 D2549020408600
D2549020408800 D2549020409000 D2549020409200 D2549020409400 D2549020409600
D2549020409800 D2549020410200 D2549020410400 D2549020410600 D2549020410800

D2549020411000 D2549020411400 D2549020411600 D2549020412600 D2549020412800
D2549020413000 D2549020413400 D2549020414200 D2549020500000 D2549020500200
D2549020500400 D2549020500600 D2549020500800 D2549020501000 D2549020501200
D2549020501400 D2549020501600 D2549020501800 D2549020502000 D2549020502200
D2549020502400 D2549020502600 D2549020502800 D2549020503000 D2549020503200
D2549020503400 D2549020503600 D2549020503800 D2549020504000 D2549020504200
D2549020504400 D2549020504600 D2549020504800 D2549020505000 D2549020505200
D2549020505400 D2549020505600 D2549020505800 D2549020506000 D2549020506200
D2549020506400 D2549020506600 D2549020506800 D2549020507000 D2549020507200
D2549020507400 D2549020507600 D2549020507800 D2549020508000 D2549020508200
D2549020508400 D2549020508600 D2549020508800 D2549020509000 D2549020509200
D2549020509600 D2549020509800 D2549020510000 D2549020510400 D2549020510600
D2549020510800 D2549020511000 D2549020511200 D2549020511600 D2549020511800
D2549020512000 D2549020512200 D2549020512400 D2549020512600 D2549020512800
D2549020513000 D2549020513200 D2549020513400 D2549020513600 D2549020513800
D2549020514000 D2549020514200 D2549020514400 D2549020514600 D2549020514800
D2549020600000 D2549020600200 D2549020600400 D2549020600800 D2549020601000
D2549020601200 D2549020601400 D2549020601600 D2549020601800 D2549020602000
D2549020602200 D2549020602400 D2549020602600 D2549020602800 D2549020603000
D2549020603200 D2549020603400 D2549020603600 D2549020603800 D2549020604000
D2549020604200 D2549020604400 D2549020604600 D2549020604800 D2549020605000
D2549020605200 D2549020605400 D2549020605600 D2549020605800 D2549020606000
D2549020606400 D2549020606600 D2549020606800 D2549020607000 D2549020607200
D2549020607400 D2549020607600 D2549020607800 D2549020608200 D2549020608400
D2549020608600 D2549020608800 D2549020609000 D2549020609200 D2549020609400
D2549020609600 D2549020609800 D2549020610000 D2549020610200 D2549020610400
D2549020610600 D2549020610800 D2549020611000 D2549020611200 D2549020611400
D2549020611600 D2549020611800 D2549020612000 D2549020612200 D2549020612400
D2549020612600 D2549020612800 D2549020613000 D2549020613200 D2549020613600
D2549020613800 D2549020614000 D2549020614400 D2549020614600 D2549020614800
D2549020700000 D2549020700200 D2549020700400 D2549020700600 D2549020700800
D2549020701000 D2549020701200 D2549020701400 D2549020701600 D2549020701800
D2549020702000 D2549020702200 D2549020702400 D2549020702600 D2549020702800
D2549020703200 D2549020703400 D2549020703600 D2549020703800 D2549020704000
D2549020704200 D2549020704400 D2549020704600 D2549020704800 D2549020705000
D2549020705200 D2549020705400 D2549020705600 D2549020705800 D2549020706000
D2549020706200 D2549020706400 D2549020706600 D2549020706800 D2549020707000
D2549020707200 D2549020707400 D2549020707600 D2549020707800 D2549020708000
D2549020708200 D2549020708400 D2549020708600 D2549020708800 D2549020709000
D2549020709200 D2549020709400 D2549020709600 D2549020709800 D2549020710000
D2549020710200 D2549020710400 D2549020710600 D2549020710800 D2549020711000
D2549020711200 D2549020711400 D2549020711600 D2549020712000 D2549020712200
D2549020712400 D2549020712600 D2549020712800 D2549020713000 D2549020713200
D2549020713400 D2549020713600 D2549020713800 D2549020714000 D2549020714400
D2549020714600 D2549020800000 D2549020800200 D2549020800400 D2549020800600
D2549020800800 D2549020801000 D2549020801200 D2549020801400 D2549020801600
D2549020801800 D2549020802000 D2549020802200 D2549020802400 D2549020802600

D2549020802800 D2549020803000 D2549020803200 D2549020803400 D2549020803600
D2549020803800 D2549020804000 D2549020804200 D2549020804400 D2549020804800
D2549020805000 D2549020805400 D2549020805600 D2549020805800 D2549020806000
D2549020806200 D2549020806400 D2549020806600 D2549020806800 D2549020807000
D2549020807200 D2549020807600 D2549020807800 D2549020808200 D2549020808400
D2549020808600 D2549020808800 D2549020809000 D2549020809400 D2549020809600
D2549020809800 D2549020810000 D2549020810200 D2549020810400 D2549020810600
D2549020810800 D2549020811200 D2549020811400 D2549020811600 D2549020811800
D2549020812000 D2549020812200 D2549020812400 D2549020812600 D2549020812800
D2549020813000 D2549020813200 D2549020813400 D2549020813600 D2549020813800
D2549020814000 D2549020814200 D2549020814400 D2549020814600 D2549020814800
D2549030400000 D2549030400200 D2549030400400 D2549030400600 D2549030401000
D2549030401200 D2549030401400 D2549030401600 D2549030401800 D2549030402600
D2549030402800 D2549030403000 D2549030403400 D2549030403600 D2549030403800
D2549030404000 D2549030404200 D2549030404400 D2549030404600 D2549030404800
D2549030405000 D2549030405600 D2549030405800 D2549030406000 D2549030406400
D2549030406600 D2549030406800 D2549030407000 D2549030407400 D2549030407600
D2549030407800 D2549030408000 D2549030408400 D2549030409200 D2549030409800
D2549030410000 D2549030410400 D2549030411200 D2549030411400 D2549030411600
D2549030411800 D2549030412000 D2549030412400 D2549030412600 D2549030412800
D2549030413200 D2549030413600 D2549030414400 D2549030414800 D2549030500200
D2549030500400 D2549030500600 D2549030500800 D2549030501000 D2549030501200
D2549030501400 D2549030501600 D2549030501800 D2549030502000 D2549030502200
D2549030502400 D2549030502600 D2549030502800 D2549030503000 D2549030503200
D2549030503400 D2549030503600 D2549030503800 D2549030504000 D2549030504200
D2549030504600 D2549030504800 D2549030505200 D2549030505400 D2549030505600
D2549030505800 D2549030506000 D2549030506200 D2549030506400 D2549030506600
D2549030506800 D2549030507000 D2549030507200 D2549030507400 D2549030507600
D2549030507800 D2549030508000 D2549030508200 D2549030508400 D2549030508600
D2549030508800 D2549030509000 D2549030509200 D2549030509400 D2549030509600
D2549030509800 D2549030510000 D2549030510200 D2549030510400 D2549030510600
D2549030510800 D2549030511000 D2549030511200 D2549030511400 D2549030511600
D2549030511800 D2549030512000 D2549030512200 D2549030512400 D2549030512800
D2549030513000 D2549030513200 D2549030513400 D2549030513600 D2549030513800
D2549030514000 D2549030514200 D2549030514400 D2549030514600 D2549030514800
D2549030600000 D2549030600200 D2549030600400 D2549030600600 D2549030600800
D2549030601000 D2549030601200 D2549030601400 D2549030601600 D2549030601800
D2549030602000 D2549030602200 D2549030602400 D2549030602600 D2549030602800
D2549030603000 D2549030603200 D2549030603400 D2549030603600 D2549030603800
D2549030604200 D2549030604400 D2549030604600 D2549030604800 D2549030605000
D2549030605200 D2549030605400 D2549030605600 D2549030605800 D2549030606000
D2549030606200 D2549030606400 D2549030606600 D2549030606800 D2549030607000
D2549030607200 D2549030607400 D2549030607600 D2549030607800 D2549030608000
D2549030608200 D2549030608400 D2549030608600 D2549030608800 D2549030609000
D2549030609200 D2549030609800 D2549030610000 D2549030610200 D2549030610400
D2549030610600 D2549030611000 D2549030611200 D2549030611400 D2549030611600
D2549030611800 D2549030612000 D2549030612200 D2549030612400 D2549030612600

D2549030612800 D2549030613200 D2549030613400 D2549030613600 D2549030613800
D2549030614000 D2549030614200 D2549030614400 D2549030614600 D2549030614800
D2549030700200 D2549030700400 D2549030701000 D2549030701200 D2549030702600
D2549030703400 D2549030703600 D2549030705200 D2549040500200 R225401107-000
R225401107-002 R225401107-004 R225401115-000 R225401115-002 R225401128-000
R225401133-000 R225401134-000 R225401134-002 R225401134-004 R225401134-006
R225401134-008 R225401134-010 R225401134-012 R225401134-016 R225401134-018
R225401134-020 R225401134-022 R225401134-024 R225401134-026 R225401134-028
R225401134-030 R225401134-036 R225401136-000 R225401136-004 R225401136-006
R225401136-010 R225401136-012 R225401136-016 R225401136-018 R225401136-020
R225401136-022 R225401136-024 R225401137-000 R225401137-002 R225401137-004
R225401137-006 R225401137-008 R225401137-010 R225401137-012 R225401137-014
R225401137-016 R225401139-000 R225401142-000 R225401142-002 R225401145-000
R225401145-002 R225401145-004 R225401145-006 R225401145-008 R225401145-010
R225401145-012 R225401145-014 R225401146-000 R225401146-002 R225401152-000
R225401152-002 R225401152-004 R225401152-006 R225401152-008 R225401152-010
R225401153-000 R225401159-000 R225401160-000 R225401160-002 R225401168-000
R225401168-002 R225401168-004 R225401168-006 R225401168-008 R225401168-014
R225401168-016 R225401168-018 R225401168-020 R225401168-022 R225401168-024
R225401168-028 R225401172-000 R225401172-002 R225401172-004 R225401172-006
R225401172-008 R225401172-010 R225401172-012 R225401172-014 R225401172-016
R225401172-018 R225401175-000 R225401175-002 R225401176-000 R225401183-000
R225401183-002 R225401183-004 R225401183-006 R225401183-008 R225401188-000
R225401188-002 R225401188-004 R225401188-006 R225401192-000 R225401192-002
R225401195-000 R225401196-000 R225401196-002 R225401196-004 R225401196-006
R225401196-008 R225401196-010 R225401196-012 R225401196-014 R225401196-016
R225401196-018 R225401196-020 R225401196-022 R225401196-024 R225401196-034
R225401196-036 R225401196-038 R225401196-040 R225401196-042 R225401196-044
R225401196-046 R225401196-048 R225401196-050 R225401196-052 R225401196-054
R225401196-056 R225401196-058 R225401196-060 R225401196-062 R225401196-064
R225401196-066 R225401196-068 R225401196-070 R225401199-000 R225401199-002
R225401199-004 R225401199-006 R225401199-008 R225401199-010 R225401199-012
R225401600-000 R225401600-002 R225401600-004 R225401602-000 R225401603-000
R225401605-000 R225401605-002 R225401609-000 R225401611-000 R225401611-006
R225401611-008 R225401611-010 R225401611-012 R225401611-014 R225401611-016
R225401611-018 R225401613-000 R225401614-000 R225401618-000 R225401618-002
R225401619-000 R225401619-002 R225401622-000 R225401622-002 R225401624-000
R225401625-000 R225401627-000 R225401627-002 R225401627-004 R225401629-000
R225401629-002 R225401639-000 R225401639-002 R225401643-000 R225401643-002
R225401643-004 R225401643-006 R225401643-008 R225401646-000 R225401646-002
R225401647-000 R225401648-000 R225401648-002 R225401648-004 R225401648-006
R225401648-008 R225401649-000 R225401656-000 R225401656-002 R225401658-000
R225401662-000 R225401662-002 R225401676-000 R225401683-000 R225401685-000

R225401685-002 R225401688-000 R225401689-004 R225401689-006 R225401693-000 R225401811-000

7. Removal of the Ceiling Panel

A. General

A complete disassembly of the component is not necessary and not recommended.

Do not disassemble the component more than it is necessary for:

- Cleaning
- Visual Inspection
- Replacement of defective parts.

B. Procedure

WARNING: **BE CAREFUL WHEN YOU USE SOLVENTS/CLEANING AGENTS, SEALANTS AND OTHER MATERIALS. OBEY THE MATERIAL MANUFACTURER'S INSTRUCTIONS AND THE LOCAL REGULATIONS. MAKE SURE THAT THERE IS A GOOD FLOW OF AIR THROUGH THE WORK AREA. DO NOT BREATHE THE FUMES. DO NOT SMOKE. DO NOT USE THESE MATERIALS NEAR A FLAME, SPARKS OR SOURCES OF HEAT. USE PROTECTIVE CLOTHING, GOGGLES AND GLOVES. IF YOU GET ONE OF THESE MATERIALS ON YOUR SKIN OR IN YOUR EYES, FLUSH IT AWAY WITH A FLOW OF CLEAN WATER. IF YOU GET ONE OF THESE MATERIALS IN YOUR MOUTH, GET IMMEDIATE MEDICAL AID. IN GENERAL, THESE MATERIALS ARE POISONOUS, FLAMMABLE AND SKIN IRRITANTS.**

CAUTION: **DO ALL THE WORK ON A CLEAN, SOFT SURFACE TO PREVENT DAMAGE TO THE COMPONENTS.**

SUB TASK 25-41-51-000-072-A01

1. Removal of the Ceiling Panel (04-1)

(a) Remove the nuts 04-050 and the rivets 04-060.

(b) Remove the screws 04-020, 04-040, the washers 04-030 and the lavatory ceiling panel 04-010 from the lavatory structure.

TASK 25-41-51-000-802-B01

D2549010401600 D2549010401800 D2549010405200 D2549010405600 D2549010611400
D2549020300000 D2549020301600 D2549020403000 D2549020411200 D2549020411800
D2549020412000 D2549020412200 D2549020412400 D2549020413200 D2549020413600
D2549020413800 D2549020414000 D2549020414600 D2549020414800 D2549020805200
D2549020807400 D2549030402000 D2549030402200 D2549030402400 D2549030405200
D2549030405400 D2549030407200 D2549030408200 D2549030408600 D2549030409000
D2549030409400 D2549030409600 D2549030410200 D2549030410600 D2549030410800
D2549030412200 D2549030413000 D2549030413400 D2549030414000 D2549030414200
D2549030414600 D2549030700000 D2549030700600 D2549030700800 D2549030701400
D2549030701600 D2549030701800 D2549030702000 D2549030702200 D2549030702400
D2549030702800 D2549030703000 D2549030703200 D2549030703800 D2549030704000
D2549030704200 D2549030704400 D2549030704600 D2549030704800 D2549030705600
D2549040500400 D2549040500600 D2549040500800 D2549040501000 D2549040501200
D2549040501400 D2549040501600 D2549040501800 D2549040502000 R225401134-014
R225401134-032 R225401134-034 R225401134-038 R225401136-008 R225401136-014
R225401168-010 R225401168-012 R225401168-026 R225401611-020 R225401671-000
R225401671-002 R225401673-000 R225401673-002 R225401673-004 R225401673-006
R225401675-000 R225401691-000 R225401691-002 R225401697-000 R225401697-002
R225401803-000 R225401803-002 R225401808-000 R225401814-000

8. Removal of the Ceiling Panel

A. General

A complete disassembly of the component is not necessary and not recommended.

Do not disassemble the component more than it is necessary for:

- Cleaning
- Visual Inspection
- Replacement of defective parts.

B. Procedure

WARNING: **BE CAREFUL WHEN YOU USE SOLVENTS/CLEANING AGENTS, SEALANTS AND OTHER MATERIALS. OBEY THE MATERIAL MANUFACTURER'S INSTRUCTIONS AND THE LOCAL REGULATIONS. MAKE SURE THAT THERE IS A GOOD FLOW OF AIR THROUGH THE WORK AREA. DO NOT BREATHE THE FUMES. DO NOT SMOKE. DO NOT USE THESE MATERIALS NEAR A FLAME, SPARKS OR SOURCES OF HEAT. USE PROTECTIVE CLOTHING, GOGGLES AND GLOVES. IF YOU GET ONE OF THESE MATERIALS ON YOUR SKIN OR IN YOUR EYES, FLUSH IT AWAY WITH A FLOW OF CLEAN WATER. IF YOU GET ONE OF THESE MATERIALS IN YOUR MOUTH, GET IMMEDIATE MEDICAL AID. IN GENERAL, THESE MATERIALS ARE POISONOUS, FLAMMABLE AND SKIN IRRITANTS.**

CAUTION: **DO ALL THE WORK ON A CLEAN, SOFT SURFACE TO PREVENT DAMAGE TO THE COMPONENTS.**

SUB TASK 25-41-51-000-073-A01

1. Removal of the Ceiling Panel (04A-1)

   (a) Remove the screws 04A-020, 04A-040, the washers 04A-030 and the ceiling assembly 04A-010 from the lavatory structure.

TASK 25-41-51-000-803-A01

D2549010500000 D2549010500400 D2549010500600 D2549010500800 D2549010501200 D2549010501400 D2549010501600 D2549010501800 D2549010502200 D2549010502600 D2549010502800 D2549010503200 D2549010503400 D2549010503600 D2549010503800 D2549010504600 D2549010504800 D2549010505000 D2549010505200 D2549010505400 D2549010505600 D2549010505800 D2549010506000 D2549010506200 D2549010506400 D2549010506800 D2549010507000 D2549010507200 D2549010507600 D2549010507800 D2549010508200 D2549010508400 D2549010508600 D2549010508800 D2549010509000 D2549010509200 D2549010509400 D2549010509600 D2549010509800 D2549010510800 D2549010511000 D2549010511400 D2549010512000 D2549010512200 D2549010512400 D2549010513400 D2549010513600 D2549020500000 D2549020500200 D2549020500400 D2549020500600 D2549020500800 D2549020501000 D2549020501200 D2549020501400 D2549020501800 D2549020502000 D2549020502400 D2549020502600 D2549020502800 D2549020503200 D2549020503600 D2549020504200 D2549020504600 D2549020504800 D2549020505000 D2549020505200 D2549020506000 D2549020506200 D2549020506400 D2549020600000 D2549020600200 D2549020600800 D2549020601000 D2549020601400 D2549020601600 D2549020601800 D2549020602000 D2549020602400 D2549020602600 D2549020602800 D2549020603400 D2549020603600 D2549020603800 D2549020604000 D2549020604200 D2549020604400 D2549020605000 D2549020605200 D2549020605400 D2549020605600 D2549020606400 D2549020606600 D2549020607000 D2549020607200 D2549020607400 D2549020607800 D2549020608400 D2549020609200 D2549020609400 D2549020610400 D2549020611400 D2549020611800 D2549030500400 D2549030500600 D2549030500800 D2549030501000 D2549030501200 D2549030501400 D2549030502000 D2549030502600 D2549030502800 D2549030503000 D2549030503400 D2549030503600 D2549030504000 D2549030504600 D2549030504800 D2549030505200 D2549030505600 D2549030506000 D2549030506400 D2549030507000 R225401133-000 R225401134-000 R225401134-002 R225401136-016 R225401137-000 R225401137-002 R225401139-000 R225401145-000 R225401146-000 R225401146-002 R225401159-000 R225401160-002 R225401172-002 R225401188-000 R225401188-002 R225401188-004 R225401188-006

9. Removal of the Rear Wall

A. General

A complete disassembly of the component is not necessary and not recommended.

Do not disassemble the component more than it is necessary for:

- Cleaning
- Visual Inspection
- Replacement of defective parts.

B. Job Set-up Information

(1) Not applicable

C. Procedure

WARNING: **BE CAREFUL WHEN YOU USE SOLVENTS/CLEANING AGENTS, SEALANTS AND OTHER MATERIALS. OBEY THE MATERIAL MANUFACTURER'S INSTRUCTIONS AND THE LOCAL REGULATIONS. MAKE SURE THAT THERE IS A GOOD FLOW OF AIR THROUGH THE WORK AREA. DO NOT BREATHE THE FUMES. DO NOT SMOKE. DO NOT USE THESE MATERIALS NEAR A FLAME, SPARKS OR SOURCES OF HEAT. USE PROTECTIVE CLOTHING, GOGGLES AND GLOVES. IF YOU GET ONE OF THESE MATERIALS ON YOUR SKIN OR IN YOUR EYES, FLUSH IT AWAY WITH A FLOW OF CLEAN WATER. IF YOU GET ONE OF THESE MATERIALS IN YOUR MOUTH, GET IMMEDIATE MEDICAL AID. IN GENERAL, THESE MATERIALS ARE POISONOUS, FLAMMABLE AND SKIN IRRITANTS.**

CAUTION: **DO ALL THE WORK ON A CLEAN, SOFT SURFACE TO PREVENT DAMAGE TO THE COMPONENTS.**

SUB TASK 25-41-51-000-086-A01

D2549010500000 D2549010500600 D2549010500800 D2549010501200 D2549010501400 D2549010501800 D2549010502200 D2549010502600 D2549010503200 D2549010503600 D2549010503800 D2549010504600 D2549010504800 D2549010505000 D2549010505200 D2549010505400 D2549010505600 D2549010505800 D2549010506000 D2549010506400 D2549010507200 D2549010507600 D2549010507800 D2549010508200 D2549010508400 D2549010508600 D2549010508800 D2549010509200 D2549010509600 D2549010511000 D2549020500000 D2549020500200 D2549020500400 D2549020500600 D2549020500800 D2549020501000 D2549020501200 D2549020501400 D2549020501800 D2549020502000 D2549020502400 D2549020502600 D2549020502800 D2549020503200 D2549020503600 D2549020504200 D2549020504600 D2549020504800 D2549020505000 D2549020505200 D2549020506000 D2549020600000 D2549020600200 D2549020600800 D2549020601000 D2549020601400 D2549020601600 D2549020601800 D2549020602400 D2549020602600 D2549020603400 D2549020603600 D2549020603800 D2549020604000 D2549020606400 D2549020606600 D2549020607200 D2549030500400 D2549030500600 D2549030500800 D2549030501000 D2549030501200 D2549030501400 D2549030502000 D2549030502600 D2549030502800 D2549030503000 D2549030503400 D2549030503600 D2549030504800 R225401133-000 R225401139-000 R225401145-000 R225401146-000 R225401146-002 R225401188-000 R225401188-002 R225401188-004 R225401188-006

1. Removal of the Rear Wall (05-1)

NOTE: **See TABLE 3001 for the references for the replacement procedure of permanent installed parts.**

More data for bonded parts are given in column SEE REPAIR TASK. Use the data for the selection of the related repair solution.

IPL FIG. ITEM	COMPONENT PART NAME	IPL FIG. ITEM	REPLACEMENT PART NAME	SEE REPAIR TASK
05-001 05-010	Rear Wall Rear Wall Assembly	05-090	Sealing Section	Replacement of the Bonded Parts Self Adhesive
05-001 05-010	Rear Wall Rear Wall Assembly	05-100	Bumper	Replacement of the Bonded Parts Self Adhesive
05-001 05-110	Rear Wall Toilet Switch Assembly	05-117	Front Foil	Replacement of the Bonded Parts Self Adhesive

Table 3001
Reference list for the replacement of permanent installed parts

(a) Remove and disassemble the toilet switch assembly 05-110 as follows:

1 Remove the front plate 05-115 from the frame 05-113.

2 Remove the screws 05-120 and the frame 05-113 from the rear wall assembly 05-010.

(b) Remove the screws 05-050, 05-060, the washers 05-070 and the rear wall assembly 05-010 from the lavatory structure.

SUB TASK 25-41-51-000-086-B01
D2549020602800 D2549020605600 R225401134-000 R225401134-002

2. Removal of the Rear Wall (05-1)

NOTE: **See TABLE 3002 for the references for the replacement procedure of permanent installed parts.**

More data for bonded parts are given in column SEE REPAIR TASK. Use the data for the selection of the related repair solution.

IPL FIG. ITEM	COMPONENT PART NAME	IPL FIG. ITEM	REPLACEMENT PART NAME	SEE REPAIR TASK
05-001 05-010	Rear Wall Rear Wall Assembly	05-090	Sealing Section	Replacement of the Bonded Parts Self Adhesive
05-001 05-010	Rear Wall Rear Wall Assembly	05-100	Bumper	Replacement of the Bonded Parts Self Adhesive
05-001 05-110	Rear Wall Toilet Switch Assembly	05-117	Front Foil	Replacement of the Bonded Parts Self Adhesive

Table 3002
Reference list for the replacement of permanent installed parts

(a) Remove and disassemble the toilet switch assembly 05-110 as follows:

1 Remove the front plate 05-115 from the frame 05-113.

2 Remove the screws 05-120, the frame 05-113 and the spacer 05-130 from the rear wall assembly 05-010.

(b) Remove the screws 05-050, 05-060, the washers 05-070 and the rear wall assembly 05-010 from the lavatory structure.

SUB TASK 25-41-51-000-086-C01
D2549010510800 D2549010511400 D2549010512400 D2549010513400 D2549020506200 D2549020506400 D2549020604200 D2549020604400 D2549020605200 D2549020605400 D2549020607000 D2549020607400 D2549020607800 D2549020609400 D2549020610400 D2549020611400 D2549020611800 D2549030504000 D2549030504600 D2549030505200 D2549030505600 D2549030506400 D2549030507000 R225401137-000 R225401137-002 R225401159-000 R225401172-002

3. Removal of the Rear Wall (05-1)

NOTE: **See TABLE 3003 for the references for the replacement procedure of permanent installed parts.**

More data for bonded parts are given in column SEE REPAIR TASK. Use the data for the selection of the related repair solution.

IPL FIG. ITEM	COMPONENT PART NAME	IPL FIG. ITEM	REPLACEMENT PART NAME	SEE REPAIR TASK
05-001 05-010	Rear Wall Rear Wall Assembly	05-100	Bumper	Replacement of the Bonded Parts Self Adhesive
05-001 05-110	Rear Wall Toilet Switch Assembly	05-117	Front Foil	Replacement of the Bonded Parts Self Adhesive

Table 3003
Reference list for the replacement of permanent installed parts

(a) Remove and disassemble the toilet switch assembly 05-110 as follows:

1 Remove the front plate 05-115 from the frame 05-113.

2 Remove the screws 05-120 and the frame 05-113 from the rear wall assembly 05-010.

(b) Remove the screws 05-050, 05-060, the washers 05-070 and the rear wall assembly 05-010 from the lavatory structure.

SUB TASK 25-41-51-000-086-D01
D2549020609200 D2549030506000 R225401160-002

4. Removal of the Rear Wall (05-1)

NOTE: **See TABLE 3004 for the references for the replacement procedure of permanent installed parts.**

More data for bonded parts are given in column SEE REPAIR TASK. Use the data for the selection of the related repair solution.

IPL FIG. ITEM	COMPONENT PART NAME	IPL FIG. ITEM	REPLACEMENT PART NAME	SEE REPAIR TASK
05-001 05-010	Rear Wall Rear Wall Assembly	05-100	Bumper	Replacement of the Bonded Parts Self Adhesive
05-001 05-110	Rear Wall Toilet Switch Assembly	05-117	Front Foil	Replacement of the Bonded Parts Self Adhesive

Table 3004
Reference list for the replacement of permanent installed parts

(a) Remove and disassemble the toilet switch assembly 05-110 as follows:

1 Remove the front plate 05-115 from the frame 05-113.

2 Remove the screws 05-120, the frame 05-113 and the spacer 05-130 from the rear wall assembly 05-010.

(b) Remove the screws 05-050, 05-060, the washers 05-070 and the rear wall assembly 05-010 from the lavatory structure.

SUB TASK 25-41-51-000-086-E01
D2549010500400 D2549010501600 D2549010502800 D2549010503400 D2549010506200 D2549010507000 D2549010509000 D2549010509400 D2549020602000

5. Removal of the Rear Wall (05-1)

NOTE: **See TABLE 3005 for the references for the replacement procedure of permanent installed parts.**

More data for bonded parts are given in column SEE REPAIR TASK. Use the data for the selection of the related repair solution.

IPL FIG. ITEM	COMPONENT PART NAME	IPL FIG. ITEM	REPLACEMENT PART NAME	SEE REPAIR TASK
05-001 05-010	Rear Wall Rear Wall Assembly	05-090	Sealing Section	Replacement of the Bonded Parts Self Adhesive
05-001 05-110	Rear Wall Toilet Switch Assembly	05-117	Front Foil	Replacement of the Bonded Parts Self Adhesive

Table 3005
Reference list for the replacement of permanent installed parts

(a) Remove and disassemble the toilet switch assembly 05-110 as follows:

1 Remove the front plate 05-115 from the frame 05-113.

2 Remove the screws 05-120, the frame 05-113 and the spacer 05-130 from the rear wall assembly 05-010.

(b) Remove the screws 05-050, 05-060, the washers 05-070 and the rear wall assembly 05-010 from the lavatory structure.

SUB TASK 25-41-51-000-086-F01
D2549010506800 D2549010509800 D2549010512000 D2549010512200
D2549010513600 D2549020605000 D2549020608400 R225401136-016

6. Removal of the Rear Wall (05-1)

NOTE: **See TABLE 3006 for the references for the replacement procedure of permanent installed parts.**

More data for bonded parts are given in column SEE REPAIR TASK. Use the data for the selection of the related repair solution.

IPL FIG. ITEM	COMPONENT PART NAME	IPL FIG. ITEM	REPLACEMENT PART NAME	SEE REPAIR TASK
05-001 05-110	Rear Wall Toilet Switch Assembly	05-117	Front Foil	Replacement of the Bonded Parts Self Adhesive

Table 3006
Reference list for the replacement of permanent installed parts

(a) Remove and disassemble the toilet switch assembly 05-110 as follows:

1 Remove the front plate 05-115 from the frame 05-113.

2 Remove the screws 05-120, the frame 05-113 and the spacer 05-130 from the rear wall assembly 05-010.

(b) Remove the screws 05-050, 05-060, the washers 05-070 and the rear wall assembly 05-010 from the lavatory structure.

TASK 25-41-51-000-803-B01
D2549010502400 D2549010504200 D2549010504400 D2549010507400 D2549010508000
D2549010510200 D2549010510400 D2549010511200 D2549010511800 D2549010512600
D2549010513200 D2549010513800 D2549010514200 D2549010601000 D2549010601800
D2549020503800 D2549020504000 D2549020505400 D2549020505800 D2549020600400
D2549020601200 D2549020603000 D2549020603200 D2549020608800 D2549020610800
D2549020611600 D2549020613000 D2549020706400 D2549030501800 D2549030502200
D2549030502400 D2549030503200 D2549030505400 D2549030506600 D2549030509000
R225401107-002 R225401107-004 R225401128-000 R225401175-000

10. Removal of the Rear Wall

A. General

A complete disassembly of the component is not necessary and not recommended.

Do not disassemble the component more than it is necessary for:

- Cleaning
- Visual Inspection
- Replacement of defective parts.

B. Job Set-up Information
(1) Consumable Materials

REFERENCE	DESIGNATION
08-001	General Purpose Adhesive Honeycomb Filler
08-026	Adhesive/Sealant one Part, RTV Silicone Rubber

Table 3007
Consumable Materials

C. Procedure

WARNING: **BE CAREFUL WHEN YOU USE SOLVENTS/CLEANING AGENTS, SEALANTS AND OTHER MATERIALS. OBEY THE MATERIAL MANUFACTURER'S INSTRUCTIONS AND THE LOCAL REGULATIONS. MAKE SURE THAT THERE IS A GOOD FLOW OF AIR THROUGH THE WORK AREA. DO NOT BREATHE THE FUMES. DO NOT SMOKE. DO NOT USE THESE MATERIALS NEAR A FLAME, SPARKS OR SOURCES OF HEAT. USE PROTECTIVE CLOTHING, GOGGLES AND GLOVES. IF YOU GET ONE OF THESE MATERIALS ON YOUR SKIN OR IN YOUR EYES, FLUSH IT AWAY WITH A FLOW OF CLEAN WATER. IF YOU GET ONE OF THESE MATERIALS IN YOUR MOUTH, GET IMMEDIATE MEDICAL AID. IN GENERAL, THESE MATERIALS ARE POISONOUS, FLAMMABLE AND SKIN IRRITANTS.**

CAUTION: **DO ALL THE WORK ON A CLEAN, SOFT SURFACE TO PREVENT DAMAGE TO THE COMPONENTS.**

SUB TASK 25-41-51-000-090-A01
D2549010511800 D2549020610800 D2549030505400 D2549030506600

1. Removal of the Rear Wall (05A-1)

NOTE: **See TABLE 3008 for the references for the replacement procedure of permanent installed parts.**

More data for bonded parts are given in column SEE REPAIR TASK. Use the data for the selection of the related repair solution.

IPL FIG. ITEM	COMPONENT PART NAME	IPL FIG. ITEM	REPLACEMENT PART NAME	SEE REPAIR TASK
05A-001 05A-010	Rear Wall Rear Wall Assembly	05A-090	Bumper	Replacement of the Bonded Parts Self Adhesive
05A-001 05A-100	Rear Wall Toilet Switch Assembly	05A-107	Front Foil	Replacement of the Bonded Parts Self Adhesive
05A-001 05A-010	Rear Wall Rear Wall Assembly	05A-200	Bumper	Replacement of the Bonded Parts Material No. 08-001 General Purpose Adhesive Honeycomb Filler

Table 3008
Reference list for the replacement of permanent installed parts

(a) Remove and disassemble the plastic cup dispenser 05A-120 as follows:

1 Remove the retaining washers 05A-150 and the plastic-cup dispenser cover 05A-130 from the plastic-cup dispenser holder 05A-140.

2 Remove the tube 05A-160 from the plastic-cup dispenser holder 05A-140.

3 Remove the screws 05A-170, the washers 05A-180 and the plastic-cup dispenser holder 05A-140 from the rear wall assembly 05A-010.

(b) Remove and disassemble the toilet switch assembly 05A-100 as follows:

1 Remove the front plate 05A-105 from the frame 05A-103.

2 Remove the screws 05A-110 and the frame 05A-103 from the rear wall assembly 05A-010.

(c) Remove the screws 05A-050, 05A-060, the washers 05A-070, 05A-190 and the rear wall assembly 05A-010 from the lavatory structure.

SUB TASK 25-41-51-000-090-B01
D2549010504200 D2549010504400 D2549010507400 D2549010513200 D2549010514200 D2549010601000 D2549020603200 D2549020608800 D2549020611600 D2549020613000 D2549020706400

2. Removal of the Rear Wall (05A-1)

NOTE: **See TABLE 3009 for the references for the replacement procedure of permanent installed parts.**

More data for bonded parts are given in column SEE REPAIR TASK. Use the data for the selection of the related repair solution.

IPL FIG. ITEM	COMPONENT PART NAME	IPL FIG. ITEM	REPLACEMENT PART NAME	SEE REPAIR TASK
05A-001 05A-010	Rear Wall Rear Wall Assembly	05A-080	Sealing Section	Replacement of the Bonded Parts Material No. 08-026 Adhesive/Sealant one Part, RTV Silicone Rubber
05A-001 05A-010	Rear Wall Rear Wall Assembly	05A-090	Bumper	Replacement of the Bonded Parts Self Adhesive
05A-001 05A-100	Rear Wall Toilet Switch Assembly	05A-107	Front Foil	Replacement of the Bonded Parts Self Adhesive

Table 3009
Reference list for the replacement of permanent installed parts

(a) Remove and disassemble the toilet switch assembly 05A-100 as follows:

1 Remove the front plate 05A-105 from the frame 05A-103.

2 Remove the screws 05A-110, the frame 05A-103 and the spacer 05A-115 from the rear wall assembly 05A-010.

(b) Remove the screws 05A-050, 05A-250, the washers 05A-240 and the sheet 05A-260 from the rear wall assembly 05A-010.

(c) Remove the screws 05A-050, 05A-060, the washers 05A-070, 05A-190 and the rear wall assembly 05A-010 from the lavatory structure.

SUB TASK 25-41-51-000-090-C01
D2549010513800 R225401175-000

3. Removal of the Rear Wall (05A-1)

NOTE: **See TABLE 3010 for the references for the replacement procedure of permanent installed parts.**

More data for bonded parts are given in column SEE REPAIR TASK. Use the data for the selection of the related repair solution.

IPL FIG. ITEM	COMPONENT PART NAME	IPL FIG. ITEM	REPLACEMENT PART NAME	SEE REPAIR TASK
05A-001 05A-010	Rear Wall Rear Wall Assembly	05A-090	Bumper	Replacement of the Bonded Parts Self Adhesive
05A-001 05A-100	Rear Wall Toilet Switch Assembly	05A-107	Front Foil	Replacement of the Bonded Parts Self Adhesive
05A-001 05A-010	Rear Wall Rear Wall Assembly	05A-200	Bumper	Replacement of the Bonded Parts Material No. 08-001 General Purpose Adhesive Honeycomb Filler

Table 3010
Reference list for the replacement of permanent installed parts

(a) Remove and disassemble the plastic cup dispenser 05A-120 as follows:

1 Remove the retaining washers 05A-150 and the plastic-cup dispenser cover 05A-130 from the plastic-cup dispenser holder 05A-140.

2 Remove the tube 05A-160 from the plastic-cup dispenser holder 05A-140.

3 Remove the screws 05A-170, the washers 05A-180 and the plastic-cup dispenser holder 05A-140 from the rear wall assembly 05A-010.

(b) Remove and disassemble the toilet switch assembly 05A-100 as follows:

1 Remove the front plate 05A-105 from the frame 05A-103.

2 Remove the screws 05A-110, the frame 05A-103 and the spacer 05A-115 from the rear wall assembly 05A-010.

(c) Remove the screws 05A-050, 05A-060, the washers 05A-070, 05A-190 and the rear wall assembly 05A-010 from the lavatory structure.

SUB TASK 25-41-51-000-090-D01

D2549010510200 D2549010511200 D2549010512600 D2549010601800 D2549020503800 D2549020505400 D2549020505800 D2549030502200 D2549030503200 D2549030509000 R225401107-002 R225401107-004

4. Removal of the Rear Wall (05A-1)

NOTE: **See TABLE 3011 for the references for the replacement procedure of permanent installed parts.**

More data for bonded parts are given in column SEE REPAIR TASK. Use the data for the selection of the related repair solution.

IPL FIG. ITEM	COMPONENT PART NAME	IPL FIG. ITEM	REPLACEMENT PART NAME	SEE REPAIR TASK
05A-001 05A-010	Rear Wall Rear Wall Assembly	05A-080	Sealing Section	Replacement of the Bonded Parts Material No. 08-026 Adhesive/Sealant one Part, RTV Silicone Rubber
05A-001 05A-010	Rear Wall Rear Wall Assembly	05A-090	Bumper	Replacement of the Bonded Parts Self Adhesive
05A-001 05A-100	Rear Wall Toilet Switch Assembly	05A-107	Front Foil	Replacement of the Bonded Parts Self Adhesive

Table 3011
Reference list for the replacement of permanent installed parts

(a) Remove and disassemble the toilet switch assembly 05A-100 as follows:

1 Remove the front plate 05A-105 from the frame 05A-103.

2 Remove the screws 05A-110 and the frame 05A-103 from the rear wall assembly 05A-010.

(b) Remove the screws 05A-050, 05A-250, the washers 05A-240 and the sheet 05A-260 from the rear wall assembly 05A-010.

(c) Remove the screws 05A-280, 05A-300, the washers 05A-290 and the angle 05A-270 from the rear wall assembly 05A-010.

(d) Remove the screws 05A-050, 05A-060, the washers 05A-070, 05A-190 and the rear wall assembly 05A-010 from the lavatory structure.

SUB TASK 25-41-51-000-090-E01
D2549010508000 D2549010510400 D2549020504000 D2549030501800 D2549030502400

5. Removal of the Rear Wall (05A-1)

NOTE: **See TABLE 3012 for the references for the replacement procedure of permanent installed parts.**

More data for bonded parts are given in column SEE REPAIR TASK. Use the data for the selection of the related repair solution.

IPL FIG. ITEM	COMPONENT PART NAME	IPL FIG. ITEM	REPLACEMENT PART NAME	SEE REPAIR TASK
05A-001 05A-010	Rear Wall Rear Wall Assembly	05A-080	Sealing Section	Replacement of the Bonded Parts Material No. 08-026 Adhesive/Sealant one Part, RTV Silicone Rubber
05A-001 05A-010	Rear Wall Rear Wall Assembly	05A-090	Bumper	Replacement of the Bonded Parts Self Adhesive
05A-001 05A-100	Rear Wall Toilet Switch Assembly	05A-107	Front Foil	Replacement of the Bonded Parts Self Adhesive
05A-001 05A-010	Rear Wall Rear Wall Assembly	05A-200	Bumper	Replacement of the Bonded Parts Material No. 08-001 General Purpose Adhesive Honeycomb Filler

Table 3012
Reference list for the replacement of permanent installed parts

(a) Remove and disassemble the plastic cup dispenser 05A-120 as follows:

1 Remove the retaining washers 05A-150 and the plastic-cup dispenser cover 05A-130 from the plastic-cup dispenser holder 05A-140.

2 Remove the tube 05A-160 from the plastic-cup dispenser holder 05A-140.

3 Remove the screws 05A-170, the washers 05A-180 and the plastic-cup dispenser holder 05A-140 from the rear wall assembly 05A-010.

(b) Remove and disassemble the toilet switch assembly 05A-100 as follows:

1 Remove the front plate 05A-105 from the frame 05A-103.

2 Remove the screws 05A-110 and the frame 05A-103 from the rear wall assembly 05A-010.

(c) Remove the screws 05A-050, 05A-060, the washers 05A-070, 05A-190 and the rear wall assembly 05A-010 from the lavatory structure.

SUB TASK 25-41-51-000-090-F01
D2549010502400 D2549020603000

6. Removal of the Rear Wall (05A-1)

NOTE: **See TABLE 3013 for the references for the replacement procedure of permanent installed parts.**

More data for bonded parts are given in column SEE REPAIR TASK. Use the data for the selection of the related repair solution.

IPL FIG. ITEM	COMPONENT PART NAME	IPL FIG. ITEM	REPLACEMENT PART NAME	SEE REPAIR TASK
05A-001 05A-010	Rear Wall Rear Wall Assembly	05A-080	Sealing Section	Replacement of the Bonded Parts Material No. 08-026 Adhesive/Sealant one Part, RTV Silicone Rubber
05A-001 05A-100	Rear Wall Toilet Switch Assembly	05A-107	Front Foil	Replacement of the Bonded Parts Self Adhesive
05A-001 05A-010	Rear Wall Rear Wall Assembly	05A-200	Bumper	Replacement of the Bonded Parts Material No. 08-001 General Purpose Adhesive Honeycomb Filler

Table 3013
Reference list for the replacement of permanent installed parts

(a) Remove and disassemble the plastic cup dispenser 05A-120 as follows:

1 Remove the retaining washers 05A-150 and the plastic-cup dispenser cover 05A-130 from the plastic-cup dispenser holder 05A-140.

2 Remove the tube 05A-160 from the plastic-cup dispenser holder 05A-140.

3 Remove the screws 05A-170, the washers 05A-180 and the plastic-cup dispenser holder 05A-140 from the rear wall assembly 05A-010.

(b) Remove and disassemble the toilet switch assembly 05A-100 as follows:

1 Remove the front plate 05A-105 from the frame 05A-103.

2 Remove the screws 05A-110, the frame 05A-103 and the spacer 05A-115 from the rear wall assembly 05A-010.

(c) Remove the screws 05A-050, 05A-060, the washers 05A-070, 05A-190 and the rear wall assembly 05A-010 from the lavatory structure.

SUB TASK 25-41-51-000-090-G01
D2549020600400 R225401128-000

7. Removal of the Rear Wall (05A-1)

NOTE: **See TABLE 3014 for the references for the replacement procedure of permanent installed parts.**

More data for bonded parts are given in column SEE REPAIR TASK. Use the data for the selection of the related repair solution.

IPL FIG. ITEM	COMPONENT PART NAME	IPL FIG. ITEM	REPLACEMENT PART NAME	SEE REPAIR TASK
05A-001 05A-010	Rear Wall Rear Wall Assembly	05A-080	Sealing Section	Replacement of the Bonded Parts Material No. 08-026 Adhesive/Sealant one Part, RTV Silicone Rubber
05A-001 05A-010	Rear Wall Rear Wall Assembly	05A-090	Bumper	Replacement of the Bonded Parts Self Adhesive
05A-001 05A-100	Rear Wall Toilet Switch Assembly	05A-107	Front Foil	Replacement of the Bonded Parts Self Adhesive
05A-001 05A-010	Rear Wall Rear Wall Assembly	05A-200	Bumper	Replacement of the Bonded Parts Material No. 08-001 General Purpose Adhesive Honeycomb Filler

Table 3014
Reference list for the replacement of permanent installed parts

(a) Remove and disassemble the plastic cup dispenser 05A-120 as follows:

1 Remove the retaining washers 05A-150 and the plastic-cup dispenser cover 05A-130 from the plastic-cup dispenser holder 05A-140.

2 Remove the tube 05A-160 from the plastic-cup dispenser holder 05A-140.

3 Remove the screws 05A-170, the washers 05A-180 and the plastic-cup dispenser holder 05A-140 from the rear wall assembly 05A-010.

(b) Remove and disassemble the toilet switch assembly 05A-100 as follows:

1 Remove the front plate 05A-105 from the frame 05A-103.

2 Remove the screws 05A-110, the frame 05A-103 and the spacer 05A-115 from the rear wall assembly 05A-010.

(c) Remove the screws 05A-050, 05A-060, the washers 05A-070, 05A-190 and the rear wall assembly 05A-010 from the lavatory structure.

SUB TASK 25-41-51-000-090-H01
D2549020601200

8. Removal of the Rear Wall (05A-1)

NOTE: **See TABLE 3015 for the references for the replacement procedure of permanent installed parts.**

More data for bonded parts are given in column SEE REPAIR TASK. Use the data for the selection of the related repair solution.

IPL FIG. ITEM	COMPONENT PART NAME	IPL FIG. ITEM	REPLACEMENT PART NAME	SEE REPAIR TASK
05A-001 05A-010	Rear Wall Rear Wall Assembly	05A-080	Sealing Section	Replacement of the Bonded Parts Material No. 08-026 Adhesive/Sealant one Part, RTV Silicone Rubber
05A-001 05A-010	Rear Wall Rear Wall Assembly	05A-090	Bumper	Replacement of the Bonded Parts Self Adhesive
05A-001 05A-100	Rear Wall Toilet Switch Assembly	05A-107	Front Foil	Replacement of the Bonded Parts Self Adhesive
05A-001 05A-010	Rear Wall Rear Wall Assembly	05A-200	Bumper	Replacement of the Bonded Parts Material No. 08-001 General Purpose Adhesive Honeycomb Filler

Table 3015
Reference list for the replacement of permanent installed parts

(a) Remove and disassemble the plastic cup dispenser 05A-120 as follows:

1 Remove the retaining washers 05A-150 and the plastic-cup dispenser cover 05A-130 from the plastic-cup dispenser holder 05A-140.

2 Remove the tube 05A-160 from the plastic-cup dispenser holder 05A-140.

3 Remove the screws 05A-170, the washers 05A-180 and the plastic-cup dispenser holder 05A-140 from the rear wall assembly 05A-010.

(b) Remove and disassemble the toilet switch assembly 05A-100 as follows:

1 Remove the front plate 05A-105 from the frame 05A-103.

2 Remove the screws 05A-110 and the frame 05A-103 from the rear wall assembly 05A-010.

(c) Remove the screws 05A-050, 05A-250, the washers 05A-240 and the sheet 05A-260 from the rear wall assembly 05A-010.

(d) Remove the screws 05A-050, 05A-060, the washers 05A-070, 05A-190 and the rear wall assembly 05A-010 from the lavatory structure.

TASK 25-41-51-000-803-C01

D2549010501000 D2549010502000 D2549010510000 D2549010510600 D2549010511600
D2549010513000 D2549010514000 D2549010514400 D2549010514600 D2549010514800
D2549010600000 D2549010600400 D2549010600600 D2549010600800 D2549010601400
D2549010601600 D2549010602000 D2549010602200 D2549010602400 D2549010602600
D2549010602800 D2549010603000 D2549010603400 D2549010603600 D2549010603800
D2549010604000 D2549010604200 D2549010604400 D2549010604600 D2549010605000
D2549010605200 D2549010605600 D2549010605800 D2549010606200 D2549010606600
D2549010607200 D2549010608200 D2549010608400 D2549020501600 D2549020502200
D2549020503000 D2549020503400 D2549020504400 D2549020505600 D2549020506600
D2549020506800 D2549020507000 D2549020507200 D2549020507400 D2549020507600
D2549020507800 D2549020508000 D2549020508200 D2549020508600 D2549020508800
D2549020509200 D2549020509800 D2549020510000 D2549020511000 D2549020512000
D2549020512200 D2549020512600 D2549020512800 D2549020514000 D2549020514200
D2549020514400 D2549020514600 D2549020602200 D2549020604600 D2549020604800
D2549020605800 D2549020606000 D2549020606800 D2549020607600 D2549020608600
D2549020609000 D2549020609600 D2549020609800 D2549020610000 D2549020610200
D2549020610600 D2549020611000 D2549020611200 D2549020612000 D2549020612400
D2549020612600 D2549020612800 D2549020613200 D2549020613600 D2549020613800
D2549020614000 D2549020614400 D2549020614600 D2549020700200 D2549020700400
D2549020700600 D2549020700800 D2549020701000 D2549020701200 D2549020701400
D2549020701600 D2549020701800 D2549020702200 D2549020702400 D2549020702600
D2549020702800 D2549020703200 D2549020703400 D2549020703600 D2549020703800
D2549020704000 D2549020704200 D2549020704400 D2549020704600 D2549020704800
D2549020705000 D2549020705200 D2549020706000 D2549020706200 D2549020706600
D2549020706800 D2549020707000 D2549020707200 D2549020707800 D2549020708200
D2549020708400 D2549020708600 D2549020708800 D2549020709000 D2549020709600
D2549020709800 D2549020710200 D2549020710400 D2549020710600 D2549020710800
D2549020711000 D2549020711200 D2549020711400 D2549020712200 D2549020712400
D2549020712800 D2549020713200 D2549020713400 D2549020713600 D2549020713800
D2549020714600 D2549030500200 D2549030501600 D2549030503800 D2549030504200
D2549030505800 D2549030506200 D2549030506800 D2549030507200 D2549030507400
D2549030507800 D2549030508000 D2549030508200 D2549030508400 D2549030508600
D2549030508800 D2549030509200 D2549030509600 D2549030509800 D2549030510000
D2549030510200 D2549030510400 D2549030510600 D2549030510800 D2549030511000
D2549030511200 D2549030511400 D2549030511600 D2549030512000 D2549030512200
D2549030512400 D2549030512800 D2549030513000 D2549030513400 D2549030513600
D2549030514000 D2549030514200 D2549030514400 D2549030514600 D2549030514800
D2549030600000 D2549030600200 D2549030600600 D2549030600800 D2549030601000
D2549030601200 D2549030602000 D2549030602400 D2549030602800 D2549030603400
D2549030603600 D2549030604200 D2549030604600 D2549030604800 D2549030605000
D2549030605200 D2549030605400 D2549030605600 D2549030605800 D2549030606200
D2549030606400 D2549030606600 D2549030606800 D2549030607000 D2549030607600
D2549030608600 D2549030609000 D2549030610200 D2549030610600 D2549030611400
D2549030611800 R225401107-000 R225401115-000 R225401115-002 R225401134-006
R225401134-008 R225401134-010 R225401134-016 R225401134-018 R225401134-020
R225401134-022 R225401134-024 R225401134-026 R225401136-000 R225401136-010

R225401136-020 R225401136-022 R225401137-004 R225401137-006 R225401137-008
R225401137-010 R225401137-012 R225401137-014 R225401142-000 R225401142-002
R225401145-002 R225401145-004 R225401145-006 R225401145-012 R225401152-000
R225401152-002 R225401152-004 R225401152-006 R225401153-000 R225401168-004
R225401168-006 R225401168-016 R225401168-018 R225401172-004 R225401172-006
R225401172-008 R225401172-010 R225401172-012 R225401176-000 R225401192-000
R225401195-000 R225401196-000 R225401196-002 R225401196-004 R225401196-034
R225401196-036 R225401196-046 R225401196-048 R225401196-050 R225401600-000
R225401600-002 R225401605-000 R225401618-000 R225401618-002 R225401619-000
R225401619-002

11. Removal of the Rear Wall

A. General

A complete disassembly of the component is not necessary and not recommended.

Do not disassemble the component more than it is necessary for:

- Cleaning
- Visual Inspection
- Replacement of defective parts.

B. Job Set-up Information

(1) Not applicable

C. Procedure

WARNING: **BE CAREFUL WHEN YOU USE SOLVENTS/CLEANING AGENTS, SEALANTS AND OTHER MATERIALS. OBEY THE MATERIAL MANUFACTURER'S INSTRUCTIONS AND THE LOCAL REGULATIONS. MAKE SURE THAT THERE IS A GOOD FLOW OF AIR THROUGH THE WORK AREA. DO NOT BREATHE THE FUMES. DO NOT SMOKE. DO NOT USE THESE MATERIALS NEAR A FLAME, SPARKS OR SOURCES OF HEAT. USE PROTECTIVE CLOTHING, GOGGLES AND GLOVES. IF YOU GET ONE OF THESE MATERIALS ON YOUR SKIN OR IN YOUR EYES, FLUSH IT AWAY WITH A FLOW OF CLEAN WATER. IF YOU GET ONE OF THESE MATERIALS IN YOUR MOUTH, GET IMMEDIATE MEDICAL AID. IN GENERAL, THESE MATERIALS ARE POISONOUS, FLAMMABLE AND SKIN IRRITANTS.**

CAUTION: **DO ALL THE WORK ON A CLEAN, SOFT SURFACE TO PREVENT DAMAGE TO THE COMPONENTS.**

SUB TASK 25-41-51-000-092-A01
D2549020610200

1. Removal of the Rear Wall (05B-1)

NOTE: **See TABLE 3016 for the references for the replacement procedure of permanent installed parts.**

More data for bonded parts are given in column SEE REPAIR TASK. Use the data for the selection of the related repair solution.

IPL FIG. ITEM	COMPONENT PART NAME	IPL FIG. ITEM	REPLACEMENT PART NAME	SEE REPAIR TASK
05B-001 05B-080	Rear Wall Toilet Switch Assembly	05B-100	Front Foil	Replacement of the Bonded Parts Self Adhesive
05B-001 05B-010	Rear Wall Rear Wall Assembly	05B-120	Bumper	Replacement of the Bonded Parts Self Adhesive

Table 3016
Reference list for the replacement of permanent installed parts

(a) Remove and disassemble the toilet switch assembly 05B-080 as follows:

1 Remove the front plate 05B-090 from the frame 05B-085.

2 Remove the screws 05B-110, the frame 05B-085 and the spacer 05B-130 from the rear wall assembly 05B-010.

(b) Remove the screws 05B-050, 05B-060, the washers 05B-070 and the rear wall assembly 05B-010 from the lavatory structure.

SUB TASK 25-41-51-000-092-B01
D2549010510000 D2549010511600 D2549010513000 D2549020604600 D2549020604800 D2549020605800 D2549020606000 D2549020606800 D2549020607600 D2549020608600 D2549020609000 D2549020609600 D2549020609800 D2549020610600 D2549020611000 D2549020611200 D2549020701200 D2549030505800 D2549030506200 D2549030506800 D2549030507200 R225401137-010 R225401176-000

2. Removal of the Rear Wall (05B-1)

NOTE: **See TABLE 3017 for the references for the replacement procedure of permanent installed parts.**

More data for bonded parts are given in column SEE REPAIR TASK. Use the data for the selection of the related repair solution.

IPL FIG. ITEM	COMPONENT PART NAME	IPL FIG. ITEM	REPLACEMENT PART NAME	SEE REPAIR TASK
05B-001 05B-080	Rear Wall Toilet Switch Assembly	05B-100	Front Foil	Replacement of the Bonded Parts Self Adhesive
05B-001 05B-010	Rear Wall Rear Wall Assembly	05B-120	Bumper	Replacement of the Bonded Parts Self Adhesive

Table 3017
Reference list for the replacement of permanent installed parts

(a) Remove and disassemble the toilet switch assembly 05B-080 as follows:

1 Remove the front plate 05B-090 from the frame 05B-085.

2 Remove the screws 05B-110 and the frame 05B-085 from the rear wall assembly 05B-010.

(b) Remove the screws 05B-050, 05B-060, the washers 05B-070 and the rear wall assembly 05B-010 from the lavatory structure.

SUB TASK 25-41-51-000-092-C01

D2549010501000 D2549010502000 D2549010510600 D2549010514000
D2549010514400 D2549010514600 D2549010514800 D2549010600000
D2549010600400 D2549010600600 D2549010600800 D2549010601400
D2549010601600 D2549010602000 D2549010602200 D2549010602400
D2549010602600 D2549010602800 D2549010603000 D2549010603400
D2549010603600 D2549010603800 D2549010604000 D2549010604200
D2549010604400 D2549010604600 D2549010605000 D2549010605200
D2549010605600 D2549010605800 D2549010606200 D2549010606600
D2549010607200 D2549010608200 D2549010608400 D2549020501600
D2549020502200 D2549020503000 D2549020503400 D2549020504400
D2549020505600 D2549020506600 D2549020506800 D2549020507000
D2549020507200 D2549020507400 D2549020507600 D2549020507800
D2549020508000 D2549020508200 D2549020508600 D2549020508800
D2549020509200 D2549020509800 D2549020510000 D2549020511000

D2549020512000 D2549020512200 D2549020512600 D2549020512800
D2549020514000 D2549020514200 D2549020514400 D2549020514600
D2549020602200 D2549020610000 D2549020612000 D2549020612400
D2549020612600 D2549020612800 D2549020613200 D2549020613600
D2549020613800 D2549020614000 D2549020614400 D2549020614600
D2549020700200 D2549020700400 D2549020700600 D2549020700800
D2549020701000 D2549020701400 D2549020701600 D2549020701800
D2549020702200 D2549020702400 D2549020702600 D2549020702800
D2549020703200 D2549020703400 D2549020703600 D2549020703800
D2549020704000 D2549020704200 D2549020704400 D2549020704600
D2549020704800 D2549020705000 D2549020705200 D2549020706000
D2549020706200 D2549020706600 D2549020706800 D2549020707000
D2549020707200 D2549020707800 D2549020708200 D2549020708400
D2549020708600 D2549020708800 D2549020709000 D2549020709600
D2549020709800 D2549020710200 D2549020710400 D2549020710600
D2549020710800 D2549020711000 D2549020711200 D2549020711400
D2549020712200 D2549020712400 D2549020712800 D2549020713200
D2549020713400 D2549020713600 D2549020713800 D2549020714600
D2549030500200 D2549030501600 D2549030503800 D2549030504200
D2549030507400 D2549030507800 D2549030508000 D2549030508200
D2549030508400 D2549030508600 D2549030508800 D2549030509200
D2549030509600 D2549030509800 D2549030510000 D2549030510200
D2549030510400 D2549030510600 D2549030510800 D2549030511000
D2549030511200 D2549030511400 D2549030511600 D2549030512000
D2549030512200 D2549030512400 D2549030512800 D2549030513000
D2549030513400 D2549030513600 D2549030514000 D2549030514200
D2549030514400 D2549030514600 D2549030514800 D2549030600000
D2549030600200 D2549030600600 D2549030600800 D2549030601000
D2549030601200 D2549030602000 D2549030602400 D2549030602800
D2549030603400 D2549030603600 D2549030604200 D2549030604600
D2549030604800 D2549030605000 D2549030605200 D2549030605400
D2549030605600 D2549030605800 D2549030606200 D2549030606400
D2549030606600 D2549030606800 D2549030607000 D2549030607600
D2549030608600 D2549030609000 D2549030610200 D2549030610600
D2549030611400 D2549030611800 R225401107-000 R225401115-000 R225401115-
002 R225401134-006 R225401134-008 R225401134-010 R225401134-016 R225401134-
018 R225401134-020 R225401134-022 R225401134-024 R225401134-026 R225401136-
000 R225401136-010 R225401136-020 R225401136-022 R225401137-004 R225401137-
006 R225401137-008 R225401137-012 R225401137-014 R225401142-000 R225401142-
002 R225401145-002 R225401145-004 R225401145-006 R225401145-012 R225401152-
000 R225401152-002 R225401152-004 R225401152-006 R225401153-000 R225401168-
004 R225401168-006 R225401168-016 R225401168-018 R225401172-004 R225401172-
006 R225401172-008 R225401172-010 R225401172-012 R225401192-000 R225401195-
000 R225401196-000 R225401196-002 R225401196-004 R225401196-034 R225401196-
036 R225401196-046 R225401196-048 R225401196-050 R225401600-000

R225401600-002 R225401605-000 R225401618-000 R225401618-002 R225401619-000 R225401619-002

3. Removal of the Rear Wall (05B-1)

NOTE: **See TABLE 3018 for the references for the replacement procedure of permanent installed parts.**

More data for bonded parts are given in column SEE REPAIR TASK. Use the data for the selection of the related repair solution.

IPL FIG. ITEM	COMPONENT PART NAME	IPL FIG. ITEM	REPLACEMENT PART NAME	SEE REPAIR TASK
05B-001 05B-080	Rear Wall Toilet Switch Assembly	05B-100	Front Foil	Replacement of the Bonded Parts Self Adhesive

Table 3018
Reference list for the replacement of permanent installed parts

(a) Remove and disassemble the toilet switch assembly 05B-080 as follows:

1 Remove the front plate 05B-090 from the frame 05B-085.

2 Remove the screws 05B-110, the frame 05B-085 and the spacer 05B-130 from the rear wall assembly 05B-010.

(b) Remove the screws 05B-050, 05B-060, the washers 05B-070 and the rear wall assembly 05B-010 from the lavatory structure.

TASK 25-41-51-000-803-D01

D2547161903000 D2549010606800 D2549010607000 D2549010607400 D2549010607600
D2549010608600 D2549010608800 D2549010609000 D2549010609200 D2549010609600
D2549010609800 D2549010610000 D2549010610400 D2549020509600 D2549020510400
D2549020510800 D2549020511200 D2549020511600 D2549020511800 D2549020512400
D2549020513400 D2549020514800 D2549020608200 D2549020612200 D2549020700000
D2549020705400 D2549020707400 D2549020707600 D2549020708000 D2549020710000
D2549020713000 D2549020800000 D2549020800200 D2549020800400 D2549020800600
D2549020800800 D2549020801000 D2549020801600 D2549020802000 D2549020802200
D2549020802600 D2549020803000 D2549020803200 D2549020803400 D2549020803600
D2549020803800 D2549030400000 D2549030400200 D2549030400400 D2549030403800
D2549030601400 D2549030601600 D2549030602200 D2549030604400 D2549030607800
D2549030608000 D2549030608200 D2549030609200 D2549030609800 D2549030610000
D2549030610400 D2549030611000 D2549030611600 D2549030612000 D2549030612200
D2549030612400 D2549030612800 D2549030613400 D2549030613800 D2549030614800
R225401134-004 R225401134-012 R225401134-028 R225401137-016 R225401145-008
R225401145-014 R225401160-000 R225401168-000 R225401168-002 R225401168-014
R225401168-020 R225401168-022 R225401168-028 R225401172-000 R225401172-014
R225401172-016 R225401172-018 R225401196-006 R225401196-038 R225401196-052
R225401199-004 R225401199-006 R225401600-004 R225401605-002 R225401611-010
R225401613-000 R225401614-000 R225401629-000 R225401629-002 R225401693-000

12. Removal of the Rear Wall

A. General

A complete disassembly of the component is not necessary and not recommended.

Do not disassemble the component more than it is necessary for:

- Cleaning
- Visual Inspection
- Replacement of defective parts.

B. Job Set-up Information

(1) Not applicable

C. Procedure

WARNING: **BE CAREFUL WHEN YOU USE SOLVENTS/CLEANING AGENTS, SEALANTS AND OTHER MATERIALS. OBEY THE MATERIAL MANUFACTURER'S INSTRUCTIONS AND THE LOCAL REGULATIONS. MAKE SURE THAT THERE IS A GOOD FLOW OF AIR THROUGH THE WORK AREA. DO NOT BREATHE THE FUMES. DO NOT SMOKE. DO NOT USE THESE MATERIALS NEAR A FLAME, SPARKS OR SOURCES OF HEAT. USE PROTECTIVE CLOTHING, GOGGLES AND GLOVES. IF YOU GET ONE OF THESE MATERIALS ON YOUR SKIN OR IN YOUR EYES, FLUSH IT AWAY WITH A FLOW OF CLEAN WATER. IF YOU GET ONE OF THESE MATERIALS IN YOUR MOUTH, GET IMMEDIATE MEDICAL AID. IN GENERAL, THESE MATERIALS ARE POISONOUS, FLAMMABLE AND SKIN IRRITANTS.**

CAUTION: **DO ALL THE WORK ON A CLEAN, SOFT SURFACE TO PREVENT DAMAGE TO THE COMPONENTS.**

SUB TASK 25-41-51-000-095-A01

D2549010606800 D2549010607000 D2549010607400 D2549010607600 D2549010608600 D2549010608800 D2549010609000 D2549010609200 D2549010609600 D2549010609800 D2549010610000 D2549010610400 D2549020509600 D2549020510400 D2549020510800 D2549020511200 D2549020511600 D2549020511800 D2549020512400 D2549020513400 D2549020514800 D2549020608200 D2549020612200 D2549020700000 D2549020705400 D2549020707400 D2549020707600 D2549020708000 D2549020710000 D2549020713000 D2549020800000 D2549020800200 D2549020800400 D2549020800600 D2549020800800 D2549020801000 D2549020801600 D2549020802000 D2549020802200 D2549020802600 D2549020803000 D2549020803200 D2549020803400 D2549020803600 D2549020803800 D2549030400000 D2549030400200 D2549030400400 D2549030403800 D2549030601400 D2549030601600 D2549030602200 D2549030604400 D2549030607800 D2549030608000 D2549030608200 D2549030609200 D2549030609800 D2549030610000 D2549030610400 D2549030611000 D2549030611600 D2549030612000 D2549030612200 D2549030612400 D2549030612800 D2549030613400 D2549030613800 D2549030614800 R225401134-004 R225401134-012 R225401134-028 R225401137-016 R225401145-008 R225401145-014 R225401160-000 R225401168-000 R225401168-002 R225401168-014 R225401168-020 R225401168-022 R225401168-028 R225401172-000 R225401172-014 R225401172-016 R225401172-018 R225401196-006 R225401196-038 R225401196-052 R225401199-004 R225401199-006 R225401600-004 R225401605-002 R225401611-010 R225401613-000 R225401614-000 R225401629-000 R225401629-002 R225401693-000

1. Removal of the Rear Wall (05C-1)

NOTE: **See TABLE 3019 for the references for the replacement procedure of permanent installed parts.**

More data for bonded parts are given in column SEE REPAIR TASK. Use the data for the selection of the related repair solution.

IPL FIG. ITEM	COMPONENT PART NAME	IPL FIG. ITEM	REPLACEMENT PART NAME	SEE REPAIR TASK
05C-001 05C-090	Rear Assembly Toiler Switch Assembly	05C-110	Front foil	Replacement of the Bonded Parts Self adhesive

Table 3019
Reference list for the replacement of permanent installed parts

(a) Remove and disassemble the toilet switch assembly 05C-090 as follows:

1 Remove the front plate 05C-100 from the frame 05C-095.

2 Remove the screws 05C-120, the frame 05C-095 and the spacer 05C-130 from the rear wall assembly 05C-010.

(b) Remove the screws 05C-060, 05C-070, the washers 05C-080 and the rear wall assembly 05C-010 from the lavatory structure.

SUB TASK 25-41-51-000-095-B01
D2547161903000

2. Removal of the Rear Wall (05C-1)

NOTE: **See TABLE 3020 for the references for the replacement procedure of permanent installed parts.**

More data for bonded parts are given in column SEE REPAIR TASK. Use the data for the selection of the related repair solution.

IPL FIG. ITEM	COMPONENT PART NAME	IPL FIG. ITEM	REPLACEMENT PART NAME	SEE REPAIR TASK
05C-001 05C-090	Rear Assembly Toiler Switch Assembly	05C-110	Front foil	Replacement of the Bonded Parts Self Adhesive

Table 3020
Reference list for the replacement of permanent installed parts

(a) Remove and disassemble the toilet switch assembly 05C-090 as follows:

1 Remove the front plate 05C-100 from the frame 05C-095.

2 Remove the screws 05C-120 and the frame 05C-095 from the rear wall assembly 05C-010.

(b) Remove the screws 05C-060, 05C-070, the washers 05C-080 and the rear wall assembly 05C-010 from the lavatory structure.

TASK 25-41-51-000-803-E01

D2549010600200 D2549010601200 D2549010603200 D2549010604800 D2549010606000 D2549010606400 D2549010607800 D2549010609400 D2549020508400 D2549020509000 D2549020513000 D2549020614800 D2549020702000 D2549020705600 D2549020705800 D2549020709200 D2549020709400 D2549020711600 D2549020714400 D2549020801200 D2549020802800 D2549030507600 D2549030509400 D2549030511800 D2549030513200 D2549030513800 D2549030600400 D2549030601800 D2549030603000 D2549030603800 D2549030607200 D2549030607400 D2549030608800 D2549030611200 D2549030614200 D2549030614400 R225401175-002 R225401183-000 R225401183-002 R225401183-008 R225401603-000 R225401625-000

13. Removal of the Rear Wall

A. General

A complete disassembly of the component is not necessary and not recommended.

Do not disassemble the component more than it is necessary for:

- Cleaning
- Visual Inspection
- Replacement of defective parts.

B. Job Set-up Information
(1) Consumable Materials

REFERENCE	DESIGNATION
08-001	General Purpose Adhesive Honeycomb Filler

Table 3021
Consumable Materials

C. Procedure

WARNING: **BE CAREFUL WHEN YOU USE SOLVENTS/CLEANING AGENTS, SEALANTS AND OTHER MATERIALS. OBEY THE MATERIAL MANUFACTURER'S INSTRUCTIONS AND THE LOCAL REGULATIONS. MAKE SURE THAT THERE IS A GOOD FLOW OF AIR THROUGH THE WORK AREA. DO NOT BREATHE THE FUMES. DO NOT SMOKE. DO NOT USE THESE MATERIALS NEAR A FLAME, SPARKS OR SOURCES OF HEAT. USE PROTECTIVE CLOTHING, GOGGLES AND GLOVES. IF YOU GET ONE OF THESE MATERIALS ON YOUR SKIN OR IN YOUR EYES, FLUSH IT AWAY WITH A FLOW OF CLEAN WATER. IF YOU GET ONE OF THESE MATERIALS IN YOUR MOUTH, GET IMMEDIATE MEDICAL AID. IN GENERAL, THESE MATERIALS ARE POISONOUS, FLAMMABLE AND SKIN IRRITANTS.**

CAUTION: **DO ALL THE WORK ON A CLEAN, SOFT SURFACE TO PREVENT DAMAGE TO THE COMPONENTS.**

SUB TASK 25-41-51-000-096-A01
D2549020711600

1. Removal of the Rear Wall (05D-1)

NOTE: **See TABLE 3022 for the references for the replacement procedure of permanent installed parts.**

More data for bonded parts are given in column SEE REPAIR TASK. Use the data for the selection of the related repair solution.

IPL FIG. ITEM	COMPONENT PART NAME	IPL FIG. ITEM	REPLACEMENT PART NAME	SEE REPAIR TASK
05D-001 05D-090	Rear Wall Toilet Switch Assembly	05D-110	Front Foil	Replacement of the Bonded Parts Self Adhesive

Table 3022
Reference list for the replacement of permanent installed parts

(a) Remove and disassemble the toilet switch assembly 05D-090 as follows:

1 Remove the front plate 05D-100 from the frame 05D-095.

2 Remove the screws 05D-120, the frame 05D-095 and the spacer 05D-130 from the rear wall assembly 05D-010.

(b) Remove the screws 05D-060, 05D-070, the washers 05D-080 and the rear wall assembly 05D-010 from the lavatory structure.

SUB TASK 25-41-51-000-096-B01

D2549010600200 D2549010601200 D2549010603200 D2549010604800 D2549010606000 D2549010606400 D2549010607800 D2549010609400 D2549020508400 D2549020509000 D2549020513000 D2549020614800 D2549020702000 D2549020705600 D2549020705800 D2549020709200 D2549020709400 D2549020714400 D2549020801200 D2549020802800 D2549030507600 D2549030509400 D2549030511800 D2549030513200 D2549030513800 D2549030600400 D2549030601800 D2549030603000 D2549030603800 D2549030607200 D2549030607400 D2549030608800 D2549030611200 D2549030614200 D2549030614400 R225401175-002 R225401183-000 R225401183-002 R225401183-008 R225401603-000 R225401625-000

2. Removal of the Rear Wall (05D-1)

NOTE: **See TABLE 3023 for the references for the replacement procedure of permanent installed parts.**

More data for bonded parts are given in column SEE REPAIR TASK. Use the data for the selection of the related repair solution.

IPL FIG. ITEM	COMPONENT PART NAME	IPL FIG. ITEM	REPLACEMENT PART NAME	SEE REPAIR TASK
05D-001 05D-090	Rear Wall Toilet Switch Assembly	05D-110	Front Foil	Replacement of the Bonded Parts Self Adhesive
05D-001 05D-010	Rear Wall Rear Wall Assembly	05D-210	Bumper	Replacement of the Bonded Parts Material No. 08-001 General Purpose Adhesive Honeycomb Filler

Table 3023
Reference list for the replacement of permanent installed parts

(a) Remove and disassemble the plastic cup dispenser 05D-140 as follows:

1 Remove the retaining washers 05D-170 and the plastic-cup dispenser cover 05D-150 from the plastic-cup dispenser holder 05D-160.

2 Remove the tube 05D-180 from the plastic-cup dispenser holder 05D-160.

3 Remove the screws 05D-190, the washers 05D-200 and the plastic-cup dispenser holder 05D-160 from the rear wall assembly 05D-010.

(b) Remove and disassemble the toilet switch assembly 05D-090 as follows:

1 Remove the front plate 05D-100 from the frame 05D-095.

2 Remove the screws 05D-120, the frame 05D-095 and the spacer 05D-130 from the rear wall assembly 05D-010.

(c) Remove the screws 05D-060, 05D-070, the washers 05D-080 and the rear wall assembly 05D-010 from the lavatory structure.

TASK 25-41-51-000-803-F01
D2549020712000 D2549020712600

14. Removal of the Rear Wall

A. General

A complete disassembly of the component is not necessary and not recommended.

Do not disassemble the component more than it is necessary for:

- Cleaning
- Visual Inspection
- Replacement of defective parts.

B. Procedure

WARNING: **BE CAREFUL WHEN YOU USE SOLVENTS/CLEANING AGENTS, SEALANTS AND OTHER MATERIALS. OBEY THE MATERIAL MANUFACTURER'S INSTRUCTIONS AND THE LOCAL REGULATIONS. MAKE SURE THAT THERE IS A GOOD FLOW OF AIR THROUGH THE WORK AREA. DO NOT BREATHE THE FUMES. DO NOT SMOKE. DO NOT USE THESE MATERIALS NEAR A FLAME, SPARKS OR SOURCES OF HEAT. USE PROTECTIVE CLOTHING, GOGGLES AND GLOVES. IF YOU GET ONE OF THESE MATERIALS ON YOUR SKIN OR IN YOUR EYES, FLUSH IT AWAY WITH A FLOW OF CLEAN WATER. IF YOU GET ONE OF THESE MATERIALS IN YOUR MOUTH, GET IMMEDIATE MEDICAL AID. IN GENERAL, THESE MATERIALS ARE POISONOUS, FLAMMABLE AND SKIN IRRITANTS.**

CAUTION: **DO ALL THE WORK ON A CLEAN, SOFT SURFACE TO PREVENT DAMAGE TO THE COMPONENTS.**

SUB TASK 25-41-51-000-099-A01
1. Removal of the Rear Wall (05E-1)

(a) Remove the screws 05E-090, the washers 05E-150 and the cover assembly 05E-080 from the rear wall assembly 05E-010.

(b) Remove the screws 05E-130, the washers 05E-140 and the rear wall lining panel assembly 05E-100 with the L-angles 05E-110, 05E-120 from the lavatory structure.

(c) Remove the screws 05E-130, the washers 05E-140 and the L-angles 05E-110, 05E-120 from the rear wall lining panel assembly 05E-100.

(d) Remove the screws 05E-050, 05E-060, the washers 05E-070 and the rear wall assembly 05E-010 from the lavatory structure.

TASK 25-41-51-000-803-G01

D2549010402400 D2549010403200 D2549010403400 D2549010404600 D2549010404800 D2549010406400 D2549010610600 D2549020300000 D2549020301600 D2549020302000 D2549020400800 D2549020401400 D2549020403200 D2549020407400 D2549020407600 D2549020408200 D2549020410800 D2549020411800 D2549020412200 D2549020412800 D2549020801800 D2549020806800 D2549020813200 D2549020814800 D2549030402400 D2549030403600 D2549030404400 D2549030404800 D2549030406400 D2549030408000 D2549030408400 D2549030410200 D2549030410400 D2549030411400 D2549030411800 D2549030412400 D2549030412800 D2549030414600 D2549030613200 D2549030701200 D2549030702000 D2549030703200 D2549030703600 D2549030705200 D2549030705600 D2549040501800 D2549040502000 R225401183-004 R225401183-006 R225401627-000 R225401627-002 R225401648-000 R225401648-002 R225401648-004 R225401648-006 R225401648-008 R225401662-000 R225401662-002 R225401675-000 R225401683-000 R225401685-000 R225401685-002 R225401689-004 R225401689-006 R225401803-000 R225401803-002 R225401811-000

15. Removal of the Rear Wall

A. General

A complete disassembly of the component is not necessary and not recommended.

Do not disassemble the component more than it is necessary for:

- Cleaning
- Visual Inspection
- Replacement of defective parts.

B. Job Set-up Information
(1) Consumable Materials

REFERENCE	DESIGNATION
08-010A	Epoxy Resin and Hardener Adhesive

Table 3024
Consumable Materials

C. Procedure

WARNING: **BE CAREFUL WHEN YOU USE SOLVENTS/CLEANING AGENTS, SEALANTS AND OTHER MATERIALS. OBEY THE MATERIAL MANUFACTURER'S INSTRUCTIONS AND THE LOCAL REGULATIONS. MAKE SURE THAT THERE IS A GOOD FLOW OF AIR THROUGH THE WORK AREA. DO NOT BREATHE THE FUMES. DO NOT SMOKE. DO NOT USE THESE MATERIALS NEAR A FLAME, SPARKS OR SOURCES OF HEAT. USE PROTECTIVE CLOTHING, GOGGLES AND GLOVES. IF YOU GET ONE OF THESE MATERIALS ON YOUR SKIN OR IN YOUR EYES, FLUSH IT AWAY WITH A FLOW OF CLEAN WATER. IF YOU GET ONE OF THESE MATERIALS IN YOUR MOUTH, GET IMMEDIATE MEDICAL AID. IN GENERAL, THESE MATERIALS ARE POISONOUS, FLAMMABLE AND SKIN IRRITANTS.**

CAUTION: **DO ALL THE WORK ON A CLEAN, SOFT SURFACE TO PREVENT DAMAGE TO THE COMPONENTS.**

SUB TASK 25-41-51-000-100-A01

1. Removal of the Rear Wall (05F-1)

NOTE: **See TABLE 3025 for the references for the replacement procedure of permanent installed parts.**

More data for bonded parts are given in column SEE REPAIR TASK. Use the data for the selection of the related repair solution.

IPL FIG. ITEM	COMPONENT PART NAME	IPL FIG. ITEM	REPLACEMENT PART NAME	SEE REPAIR TASK
05F-001 05F-090	Rear Wall Toilet Switch Assembly	05F-120	Front Foil	Replacement of the Bonded Parts Self Adhesive
05F-001 05F-010 05F-170	Rear Wall Rear Wall Assembly Plastic Cup Dispenser Holder	05F-175	Receptacle	Replacement of the Riveted Parts
05F-001 05F-010	Rear Wall Rear Wall Assembly	05F-220	Bumper	Replacement of the Bonded Parts Material No. 08-010A Epoxy Resin and Hardener Adhesive

Table 3025
Reference list for the replacement of permanent installed parts

(a) Remove and disassemble the plastic cup dispenser 05F-150 as follows:

1 Remove the retaining washers 05F-180 and the plastic cup dispenser cover 05F-160 from the plastic-cup dispenser holder 05F-170.

2 Remove the tube 05F-190 from the plastic-cup dispenser holder 05F-170.

3 Remove the screws 05F-200, the washers 05F-210 and the plastic-cup dispenser holder 05F-170 from the rear wall assembly 05F-010.

(b) Remove and disassemble the toilet switch assembly 05F-090 as follows:

1 Remove the front plate 05F-110 from the frame 05F-100.

2 Remove the screws 05F-130, the frame 05F-100 and the spacer 05F-140 from the rear wall assembly 05F-010.

(c) Remove the screws 05F-060, 05F-070, the washers 05F-080 and the rear wall assembly 05F-010 from the lavatory structure.

TASK 25-41-51-000-803-H01

D2549010400200 D2549010610200 D2549010610800 D2549010611000 D2549010611200 D2549010611600 D2549010611800 D2549010612000 D2549010612200 D2549010612400 D2549010613400 D2549020510600 D2549020513200 D2549020513600 D2549020714000 D2549020801400 D2549020802400 D2549020804000 D2549020804200 D2549020804800 D2549020805000 D2549020805600 D2549020806000 D2549020806200 D2549020806400 D2549020807000 D2549020807400 D2549020807600 D2549020808200 D2549020808400 D2549020808600 D2549020808800 D2549020809000 D2549020809400 D2549020809800 D2549020810000 D2549020810200 D2549020810600 D2549020811400 D2549020811600 D2549020811800 D2549020812000 D2549030400600 D2549030401000 D2549030401200 D2549030401400 D2549030401600 D2549030402000 D2549030402200 D2549030402600 D2549030402800 D2549030403000 D2549030403400 D2549030404200 D2549030405200 D2549030405400 D2549030405600 D2549030407200 D2549030603200 D2549030606000 D2549030608400 D2549030612600 D2549030613600 D2549030614600 R225401134-030 R225401134-032 R225401134-034 R225401145-010 R225401168-008 R225401168-010 R225401168-012 R225401168-024 R225401168-026 R225401192-002 R225401196-008 R225401196-010 R225401196-012 R225401196-040 R225401196-044 R225401196-054 R225401196-056 R225401196-058 R225401199-000 R225401199-002 R225401199-008 R225401609-000 R225401611-008 R225401622-000 R225401622-002 R225401646-000 R225401647-000

16. Removal of the Rear Wall

A. General

A complete disassembly of the component is not necessary and not recommended.

Do not disassemble the component more than it is necessary for:

- Cleaning
- Visual Inspection
- Replacement of defective parts.

B. Job Set-up Information

(1) Not applicable

C. Procedure

WARNING: **BE CAREFUL WHEN YOU USE SOLVENTS/CLEANING AGENTS, SEALANTS AND OTHER MATERIALS. OBEY THE MATERIAL MANUFACTURER'S INSTRUCTIONS AND THE LOCAL REGULATIONS. MAKE SURE THAT THERE IS A GOOD FLOW OF AIR THROUGH THE WORK AREA. DO NOT BREATHE THE FUMES. DO NOT SMOKE. DO NOT USE THESE MATERIALS NEAR A FLAME, SPARKS OR SOURCES OF HEAT. USE PROTECTIVE CLOTHING, GOGGLES AND GLOVES. IF YOU GET ONE OF THESE MATERIALS ON YOUR SKIN OR IN YOUR EYES, FLUSH IT AWAY WITH A FLOW OF CLEAN WATER. IF YOU GET ONE OF THESE MATERIALS IN YOUR MOUTH, GET IMMEDIATE MEDICAL AID. IN GENERAL, THESE MATERIALS ARE POISONOUS, FLAMMABLE AND SKIN IRRITANTS.**

CAUTION: **DO ALL THE WORK ON A CLEAN, SOFT SURFACE TO PREVENT DAMAGE TO THE COMPONENTS.**

SUB TASK 25-41-51-000-102-A01

D2549010400200 D2549010610200 D2549010610800 D2549010611000 D2549010611200 D2549010611600 D2549010611800 D2549010612000 D2549010612200 D2549010612400 D2549010613400 D2549020510600 D2549020513200 D2549020513600 D2549020714000 D2549020801400 D2549020802400 D2549020804000 D2549020804200 D2549020804800 D2549020805000 D2549020805600 D2549020806000 D2549020806200 D2549020806400 D2549020807000 D2549020807400 D2549020807600 D2549020808200 D2549020808400 D2549020808600 D2549020808800 D2549020809000 D2549020809400 D2549020809800 D2549020810000 D2549020810200 D2549020810600 D2549020811400 D2549020811600 D2549020811800 D2549020812000 D2549030400600 D2549030401000 D2549030401200 D2549030401400 D2549030401600 D2549030402000 D2549030402200 D2549030402600 D2549030402800 D2549030403000 D2549030403400 D2549030404200 D2549030405200 D2549030405400 D2549030405600 D2549030407200 D2549030603200 D2549030612600 D2549030613600 D2549030614600 R225401134-030 R225401134-032 R225401134-034 R225401145-010 R225401168-008 R225401168-010 R225401168-012 R225401168-024 R225401168-026 R225401192-002 R225401196-008 R225401196-010 R225401196-012 R225401196-040 R225401196-044 R225401196-054 R225401196-056 R225401196-058 R225401199-000 R225401199-008 R225401609-000 R225401622-000 R225401622-002 R225401646-000 R225401647-000

1. Removal of the Rear Wall (05G-1)

NOTE: **See TABLE 3026 for the references for the replacement procedure of permanent installed parts.**

More data for bonded parts are given in column SEE REPAIR TASK. Use the data for the selection of the related repair solution.

IPL FIG. ITEM	COMPONENT PART NAME	IPL FIG. ITEM	REPLACEMENT PART NAME	SEE REPAIR TASK
05G-001 05G-090	Rear Wall Toilet Switch Assembly	05G-120	Front Foil	Replacement of the Bonded Parts Self Adhesive

Table 3026
Reference list for the replacement of permanent installed parts

(a) Remove and disassemble the toilet switch assembly 05G-090 as follows:

1 Remove the front plate 05G-110 from the frame 05G-100.

2 Remove the screws 05G-130, the frame 05G-100 and the spacer 05G-140 from the rear wall assembly 05G-010.

(b) Remove the screws 05G-060, 05G-070, the washers 05G-080 and the rear wall assembly 05G-010 from the lavatory structure.

SUB TASK 25-41-51-000-102-B01
D2549030606000 D2549030608400 R225401199-002 R225401611-008

2. Removal of the Rear Wall (05G-1)

NOTE: **See TABLE 3027 for the references for the replacement procedure of permanent installed parts.**

More data for bonded parts are given in column SEE REPAIR TASK. Use the data for the selection of the related repair solution.

IPL FIG. ITEM	COMPONENT PART NAME	IPL FIG. ITEM	REPLACEMENT PART NAME	SEE REPAIR TASK
05G-001 05G-090	Rear Wall Toilet Switch Assembly	05G-120	Front Foil	Replacement of the Bonded Parts Self Adhesive

Table 3027
Reference list for the replacement of permanent installed parts

(a) Remove and disassemble the toilet switch assembly 05G-090 as follows:

1 Remove the front plate 05G-110 from the frame 05G-100.

2 Remove the screws 05G-130, the frame 05G-100 and the spacer 05G-140 from the rear wall assembly 05G-010.

(b) Remove the screws 05G-160, 05G-180, the washers 05G-170 and the angles 05G-150, 05G-190 from the rear wall assembly 05G-010.

(c) Remove the screws 05G-060, 05G-070, the washers 05G-080 and the rear wall assembly 05G-010 from the lavatory structure.

TASK 25-41-51-000-803-J01

D2549010400000 D2549010400400 D2549010400600 D2549010401000 D2549010401400
D2549010401600 D2549010401800 D2549010402000 D2549010402200 D2549010402800
D2549010403000 D2549010403600 D2549010403800 D2549010404000 D2549010404200
D2549010404400 D2549010405000 D2549010405200 D2549010405400 D2549010405600
D2549010405800 D2549010406000 D2549010406200 D2549010406800 D2549010407000
D2549010611400 D2549010612600 D2549010613000 D2549010613200 D2549010613600
D2549010613800 D2549010614200 D2549010614400 D2549010614600 D2549010614800
D2549020300400 D2549020300600 D2549020301800 D2549020302800 D2549020400000
D2549020400200 D2549020400400 D2549020400600 D2549020401000 D2549020401200
D2549020401600 D2549020402000 D2549020402400 D2549020402600 D2549020403000
D2549020403600 D2549020403800 D2549020404000 D2549020404200 D2549020404400
D2549020404600 D2549020404800 D2549020405000 D2549020405200 D2549020405400
D2549020405600 D2549020405800 D2549020406000 D2549020406200 D2549020406400
D2549020406600 D2549020406800 D2549020407000 D2549020407800 D2549020408000
D2549020408600 D2549020408800 D2549020409000 D2549020409200 D2549020409400
D2549020409800 D2549020410200 D2549020410600 D2549020411000 D2549020411400
D2549020411600 D2549020413000 D2549020413400 D2549020413600 D2549020413800
D2549020414200 D2549020414600 D2549020414800 D2549020513800 D2549020804400
D2549020805200 D2549020805400 D2549020805800 D2549020806600 D2549020807200
D2549020807800 D2549020809600 D2549020810400 D2549020810800 D2549020811200
D2549020812200 D2549020812400 D2549020812600 D2549020812800 D2549020813000
D2549020813400 D2549020813600 D2549020813800 D2549020814000 D2549020814200
D2549020814400 D2549020814600 D2549030401800 D2549030404000 D2549030404600
D2549030405000 D2549030405800 D2549030406000 D2549030406600 D2549030406800
D2549030407000 D2549030407400 D2549030407600 D2549030407800 D2549030408600
D2549030409000 D2549030409200 D2549030409400 D2549030409600 D2549030409800
D2549030410000 D2549030410600 D2549030410800 D2549030411600 D2549030412600
D2549030413000 D2549030413200 D2549030413400 D2549030413600 D2549030414000
D2549030414200 D2549030414400 D2549030414800 D2549030614000 D2549030700000
D2549030700200 D2549030700400 D2549030700600 D2549030700800 D2549030701600
D2549030701800 D2549030702200 D2549030702400 D2549030702600 D2549030702800
D2549030703000 D2549030703800 D2549030704000 D2549030704400 D2549030704600
D2549030704800 D2549040500200 D2549040500400 D2549040500600 D2549040500800
D2549040501000 D2549040501200 D2549040501400 D2549040501600 R225401134-014
R225401134-036 R225401134-038 R225401136-004 R225401136-006 R225401136-008
R225401136-014 R225401136-018 R225401152-008 R225401152-010 R225401196-014
R225401196-016 R225401196-018 R225401196-020 R225401196-022 R225401196-024
R225401196-042 R225401196-060 R225401196-062 R225401196-064 R225401196-066
R225401196-068 R225401196-070 R225401199-010 R225401199-012 R225401602-000
R225401611-000 R225401611-006 R225401611-012 R225401611-014 R225401611-016
R225401611-018 R225401624-000 R225401627-004 R225401639-000 R225401639-002
R225401643-000 R225401643-002 R225401643-004 R225401643-006 R225401643-008
R225401646-002 R225401649-000 R225401656-000 R225401656-002 R225401658-000
R225401671-000 R225401671-002 R225401673-000 R225401673-002 R225401673-004

R225401673-006 R225401676-000 R225401688-000 R225401691-000 R225401691-002
R225401697-000 R225401697-002 R225401808-000 R225401814-000

17. Removal of the Rear Wall

A. General

A complete disassembly of the component is not necessary and not recommended.

Do not disassemble the component more than it is necessary for:

- Cleaning
- Visual Inspection
- Replacement of defective parts.

B. Job Set-up Information

(1) Not applicable

C. Procedure

WARNING: BE CAREFUL WHEN YOU USE SOLVENTS/CLEANING AGENTS, SEALANTS AND OTHER MATERIALS. OBEY THE MATERIAL MANUFACTURER'S INSTRUCTIONS AND THE LOCAL REGULATIONS. MAKE SURE THAT THERE IS A GOOD FLOW OF AIR THROUGH THE WORK AREA. DO NOT BREATHE THE FUMES. DO NOT SMOKE. DO NOT USE THESE MATERIALS NEAR A FLAME, SPARKS OR SOURCES OF HEAT. USE PROTECTIVE CLOTHING, GOGGLES AND GLOVES. IF YOU GET ONE OF THESE MATERIALS ON YOUR SKIN OR IN YOUR EYES, FLUSH IT AWAY WITH A FLOW OF CLEAN WATER. IF YOU GET ONE OF THESE MATERIALS IN YOUR MOUTH, GET IMMEDIATE MEDICAL AID. IN GENERAL, THESE MATERIALS ARE POISONOUS, FLAMMABLE AND SKIN IRRITANTS.

CAUTION: DO ALL THE WORK ON A CLEAN, SOFT SURFACE TO PREVENT DAMAGE TO THE COMPONENTS.

SUB TASK 25-41-51-000-103-A01

1. Removal of the Rear Wall (05H-1)

NOTE: **See TABLE 3028 for the references for the replacement procedure of permanent installed parts.**

More data for bonded parts are given in column SEE REPAIR TASK. Use the data for the selection of the related repair solution.

IPL FIG. ITEM	COMPONENT PART NAME	IPL FIG. ITEM	REPLACEMENT PART NAME	SEE REPAIR TASK
05H-001 05H-090	Rear Wall Toilet Switch Assembly	05H-120	Front Foil	Replacement of the Bonded Parts Self Adhesive

Table 3028
Reference list for the replacement of permanent installed parts

(a) Remove and disassemble the toilet switch assembly 05H-090 as follows:

1 Remove the front plate 05H-110 from the frame 05H-100.

2 Remove the screws 05H-130, the frame 05H-100 and the spacer 05H-140 from the rear wall assembly 05H-010.

(b) Remove the screws 05H-060, 05H-070, the washers 05H-080 and the rear wall assembly 05H-010 from the lavatory structure.

TASK 25-41-51-000-803-K01
D2547160900200 D2547160900400 D2549010400800 D2549010402600 D2549020300800 D2549020301000 D2549020402200 D2549020403400 D2549020407200 D2549020409600 D2549020410400 D2549020411200 D2549020412000 D2549020412400 D2549020412600 D2549020413200 D2549020414000 D2549030408200 D2549030411200 D2549030412000 D2549030412200 D2549030701000 D2549030701400 D2549030703400 D2549030704200 R225401136-012 R225401136-024 R225401611-020

18. Removal of the Rear Wall

A. General

A complete disassembly of the component is not necessary and not recommended.

Do not disassemble the component more than it is necessary for:

- Cleaning
- Visual Inspection
- Replacement of defective parts.

B. Job Set-up Information

(1) Not applicable

C. Procedure

WARNING: BE CAREFUL WHEN YOU USE SOLVENTS/CLEANING AGENTS, SEALANTS AND OTHER MATERIALS. OBEY THE MATERIAL MANUFACTURER'S INSTRUCTIONS AND THE LOCAL REGULATIONS. MAKE SURE THAT THERE IS A GOOD FLOW OF AIR THROUGH THE WORK AREA. DO NOT BREATHE THE FUMES. DO NOT SMOKE. DO NOT USE THESE MATERIALS NEAR A FLAME, SPARKS OR SOURCES OF HEAT. USE PROTECTIVE CLOTHING, GOGGLES AND GLOVES. IF YOU GET ONE OF THESE MATERIALS ON YOUR SKIN OR IN YOUR EYES, FLUSH IT AWAY WITH A FLOW OF CLEAN WATER. IF YOU GET ONE OF THESE MATERIALS IN YOUR MOUTH, GET IMMEDIATE MEDICAL AID. IN GENERAL, THESE MATERIALS ARE POISONOUS, FLAMMABLE AND SKIN IRRITANTS.

CAUTION: DO ALL THE WORK ON A CLEAN, SOFT SURFACE TO PREVENT DAMAGE TO THE COMPONENTS.

SUB TASK 25-41-51-000-104-A01
1. Removal of the Rear Wall (05J-1)

NOTE: **See TABLE 3029 for the references for the replacement procedure of permanent installed parts.**

More data for bonded parts are given in column SEE REPAIR TASK. Use the data for the selection of the related repair solution.

IPL FIG. ITEM	COMPONENT PART NAME	IPL FIG. ITEM	REPLACEMENT PART NAME	SEE REPAIR TASK
05J-001 05J-090	Rear Wall Toilet Switch Assembly	05J-120	Front Foil	Replacement of the Bonded Parts Self Adhesive

Table 3029
Reference list for the replacement of permanent installed parts

(a) Remove and disassemble the toilet switch assembly 05J-090 as follows:

1 Remove the front plate 05J-110 from the frame 05J-100.

2 Remove the screws 05J-130, the frame 05J-100 and the spacer 05J-140 from the rear wall assembly 05J-010.

(b) Remove the screws 05J-060, 05J-070, the washers 05J-080 and the rear wall assembly 05J-010 from the lavatory structure.

TASK 25-41-51-000-803-L01
D2549030602600

19. Removal of the Rear Wall

A. General

- Not applicable

B. Procedure

SUB TASK 25-41-51-000-105-A01
D2549030602600

1. Removal of the Rear Wall

(a) Not applicable.

TASK 25-41-51-000-804-A01
D2549010500400 D2549010500600 D2549010500800 D2549010501000 D2549010501200 D2549010501400 D2549010501600 D2549010501800 D2549010502200 D2549010502400 D2549010502800 D2549010503200 D2549010503400 D2549010503600 D2549010504600 D2549010506200 D2549010506400 D2549020500000 D2549020500400 D2549020500600 D2549020500800 D2549020501000 D2549020501200 D2549020501400 D2549020501800 D2549020502000 D2549020502800 D2549020503200 D2549020503400 D2549020504800 D2549030606000 R225401107-000 R225401146-000 R225401146-002 R225401611-008

20. Removal of the Side Wall

A. General

A complete disassembly of the component is not necessary and not recommended.

Do not disassemble the component more than it is necessary for:

- Cleaning
- Visual Inspection
- Replacement of defective parts.

B. Job Set-up Information
(1) Consumable Materials

REFERENCE	DESIGNATION
08-007	Sealant, High Temperature

Table 3030
Consumable Materials

(2) Fixtures, Tools, Test and Support Equipment

REFERENCE	DESIGNATION
	hot air blower

Table 3031
Fixtures, Tools, Test and Support Equipment

C. Procedure

WARNING: **BE CAREFUL WHEN YOU USE SOLVENTS/CLEANING AGENTS, SEALANTS AND OTHER MATERIALS. OBEY THE MATERIAL MANUFACTURER'S INSTRUCTIONS AND THE LOCAL REGULATIONS. MAKE SURE THAT THERE IS A GOOD FLOW OF AIR THROUGH THE WORK AREA. DO NOT BREATHE THE FUMES. DO NOT SMOKE. DO NOT USE THESE MATERIALS NEAR A FLAME, SPARKS OR SOURCES OF HEAT. USE PROTECTIVE CLOTHING, GOGGLES AND GLOVES. IF YOU GET ONE OF THESE MATERIALS ON YOUR SKIN OR IN YOUR EYES, FLUSH IT AWAY WITH A FLOW OF CLEAN WATER. IF YOU GET ONE OF THESE MATERIALS IN YOUR MOUTH, GET IMMEDIATE MEDICAL AID. IN GENERAL, THESE MATERIALS ARE POISONOUS, FLAMMABLE AND SKIN IRRITANTS.**

WARNING: **KEEP ALL HYDROCARBONS (FUELS, LUBRICANTS, ETC.) AWAY FROM ALL SOURCES OF OXYGEN. OXYGEN BECOMES EXPLOSIVE WHEN IT TOUCHES HYDROCARBONS.**

WARNING: **TO PREVENT CONTAMINATION OF THE OXYGEN SYSTEM, MAKE SURE THAT YOUR HANDS AND ALL THE TOOLS ARE CLEAN.**

CAUTION: **PUT DRY, CLEAN, METAL OR PLASTIC PLUGS ON ALL PIPES OR UNITS REMOVED TEMPORARILY. PUT EACH PIPE OR UNIT IN A SEALED VINYL BAG. UNWANTED MATERIALS IN THE OXYGEN SYSTEM CAN DAMAGE THE SYSTEM.**

CAUTION: **DO ALL THE WORK ON A CLEAN, SOFT SURFACE TO PREVENT DAMAGE TO THE COMPONENTS.**

SUB TASK 25-41-51-010-104-A01
D2549020500400 D2549020500800 D2549020501200 D2549020501800 D2549020502000

1. Removal of the Side Wall (06-1)

NOTE: **See TABLE 3032 for the references for the replacement procedures of permanent installed parts.**

IPL FIG. ITEM	COMPONENT PART NAME	IPL FIG. ITEM	REPLACEMENT PART NAME	SEE REPAIR TASK
06-001 06-190	Side Wall Post Assembly	06-195	Nut	Replacement of the Riveted Parts

Table 3032
Reference list for the replacement of permanent installed parts

(a) Remove and disassemble the handle assembly 06-100 as follows:

1 Remove the security pins 06-102 from the handle assembly 06-100.

2 Remove the handle assembly 06-100 from the aft side wall assembly 06-010.

3 Remove the special screws 06-101 and the special washers 06-103 from the aft side wall assembly 06-010.

(b) Remove the studs 06-180 and the washers 06-170 from the cover oxygen container assy 06-110.

(c) Remove the screws 06-130, the nuts 06-140 and the cover oxygen container assy 06-110 from the angle 06-120.

(d) Remove the screws 06-160, the washers 06-170 and the angle 06-120 from the aft side wall assembly 06-010.

(e) Remove the ground cable from the oxygen container assy 06-155.

(f) Remove the screws 06-160, the washers 06-170 and the oxygen container assy 06-155 from the angles 06-150.

(g) Remove the screws 06-160, the washers 06-170 and the angles 06-150 from the aft side wall assembly 06-010.

(h) Remove the caps 06-210, the screws 06-200, 06-220, the washers 06-170 and the post assembly 06-190.

(i) Disassemble the post assembly 06-190 as follows:

1 Remove the screws 06-193.

(j) Remove the screws 06-030 and the fittings 06-020 from the brackets 06-013.

(k) Remove the brackets 06-013, 06-017 from the aft side wall assembly 06-010.

SUB TASK 25-41-51-010-104-B01
D2549010500600 D2549010500800 D2549010501200 D2549010501400 R225401146-000 R225401146-002

2. Removal of the Side Wall (06-1)

NOTE: **See TABLE 3033 for the references for the replacement procedures of permanent installed parts.**

IPL FIG. ITEM	COMPONENT PART NAME	IPL FIG. ITEM	REPLACEMENT PART NAME	SEE REPAIR TASK
06-001 06-190	Side Wall Post Assembly	06-195	Nut	Replacement of the Riveted Parts

Table 3033
Reference list for the replacement of permanent installed parts

(a) Remove and disassemble the handle assembly 06-100 as follows:

1 Remove the security pins 06-102 from the handle assembly 06-100.

2 Remove the handle assembly 06-100 from the aft side wall assembly 06-010.

3 Remove the special screws 06-101 and the special washers 06-103 from the aft side wall assembly 06-010.

(b) Remove the studs 06-180 and the washers 06-170 from the cover oxygen container assy 06-110.

(c) Remove the screws 06-130, the nuts 06-140 and the cover oxygen container assy 06-110 from the angle 06-120.

(d) Remove the screws 06-160, the washers 06-170 and the angle 06-120 from the aft side wall assembly 06-010.

(e) Remove the ground cable from the oxygen container assy 06-155.

(f) Remove the screws 06-160, 06-162, the washers 06-170, 06-172 and the oxygen container assy 06-155 from the angles 06-150.

(g) Remove the screws 06-160, the washers 06-170 and the angles 06-150 from the aft side wall assembly 06-010.

(h) Remove the caps 06-210, the screws 06-200, 06-220, the washers 06-170 and the post assembly 06-190.

(i) Disassemble the post assembly 06-190 as follows:

1 Remove the screws 06-193.

(j) Remove the screws 06-030 and the fittings 06-020 from the brackets 06-013.

(k) Remove the brackets 06-013, 06-017 from the aft side wall assembly 06-010.

SUB TASK 25-41-51-010-104-C01
D2549010501800 D2549010502200 D2549010503200 D2549010503600 D2549010506400

3. Removal of the Side Wall (06-1)

NOTE: **See TABLE 3034 for the references for the replacement procedures of permanent installed parts.**

IPL FIG. ITEM	COMPONENT PART NAME	IPL FIG. ITEM	REPLACEMENT PART NAME	SEE REPAIR TASK
06-001 06-190	Side Wall Post Assembly	06-195	Nut	Replacement of the Riveted Parts

Table 3034
Reference list for the replacement of permanent installed parts

(a) Remove and disassemble the handle assembly 06-100 as follows:

1 Remove the security pins 06-102 from the handle assembly 06-100.

2 Remove the handle assembly 06-100 from the aft side wall assembly 06-010.

3 Remove the special screws 06-101 and the special washers 06-103 from the aft side wall assembly 06-010.

(b) Remove the studs 06-180 and the washers 06-170 from the cover oxygen container assy 06-110.

(c) Remove the screws 06-130, the nuts 06-140 and the cover oxygen container assy 06-110 from the angle 06-120.

(d) Remove the screws 06-160, the washers 06-170 and the angle 06-120 from the aft side wall assembly 06-010.

(e) Remove the ground cable from the oxygen container assy 06-155.

(f) Remove the screws 06-160, the washers 06-170 and the oxygen container assy 06-155 from the angles 06-150.

(g) Remove the screws 06-160, the washers 06-170 and the angles 06-150 from the aft side wall assembly 06-010.

(h) Remove the caps 06-210, the screws 06-200, 06-220, the washers 06-170 and the post assembly 06-190.

(i) Disassemble the post assembly 06-190 as follows:

1 Remove the screws 06-193.

(j) Remove the screws 06-030 and the fittings 06-020 from the brackets 06-013.

(k) Remove the brackets 06-013, 06-017 from the aft side wall assembly 06-010.

SUB TASK 25-41-51-010-104-D01
D2549010504600

4. Removal of the Side Wall (06-1)

NOTE: **See TABLE 3035 for the references for the replacement procedures of permanent installed parts.**

IPL FIG. ITEM	COMPONENT PART NAME	IPL FIG. ITEM	REPLACEMENT PART NAME	SEE REPAIR TASK
06-001 06-190	Side Wall Post Assembly	06-195	Nut	Replacement of the Riveted Parts

Table 3035
Reference list for the replacement of permanent installed parts

(a) Remove and disassemble the handle assembly 06-100 as follows:

1 Remove the security pins 06-102 from the handle assembly 06-100.

2 Remove the handle assembly 06-100 from the aft side wall assembly 06-010.

3 Remove the special screws 06-101 and the special washers 06-103 from the aft side wall assembly 06-010.

(b) Remove the studs 06-180 and the washers 06-170 from the cover oxygen container assy 06-110.

(c) Remove the screws 06-130, the nuts 06-140 and the cover oxygen container assy 06-110 from the angle 06-120.

(d) Remove the screws 06-160, the washers 06-170 and the angle 06-120 from the aft side wall assembly 06-010.

(e) Remove the ground cable from the oxygen container assy 06-155.

(f) Remove the screws 06-160, the washers 06-170 and the oxygen container assy 06-155 from the angles 06-150.

(g) Remove the screws 06-160, the washers 06-170 and the angles 06-150 from the aft side wall assembly 06-010.

(h) Remove the caps 06-210, the screws 06-200, 06-220, the washers 06-170 and the post assembly 06-190.

(i) Disassemble the post assembly 06-190 as follows:

1 Remove the screws 06-193.

(j) Remove the screws 06-030 and the fittings 06-020 from the brackets 06-013.

(k) Remove the brackets 06-013, 06-017 from the aft side wall assembly 06-010.

SUB TASK 25-41-51-010-104-E01
D2549020503400

5. Removal of the Side Wall (06-1)

NOTE: **See TABLE 3036 for the references for the replacement procedures of permanent installed parts.**

IPL FIG. ITEM	COMPONENT PART NAME	IPL FIG. ITEM	REPLACEMENT PART NAME	SEE REPAIR TASK
06-001 06-190	Side Wall Post Assembly	06-195	Nut	Replacement of the Riveted Parts

Table 3036
Reference list for the replacement of permanent installed parts

(a) Remove and disassemble the handle assembly 06-100 as follows:

1 Remove the security pins 06-102 from the handle assembly 06-100.

2 Remove the handle assembly 06-100 from the aft side wall assembly 06-010.

3 Remove the special screws 06-101 and the special washers 06-103 from the aft side wall assembly 06-010.

(b) Remove the screws 06-230, the washers 06-240 and the support 06-250 from the aft side wall assembly 06-010.

(c) Remove the studs 06-180 and the washers 06-170 from the cover oxygen container assy 06-110.

(d) Remove the screws 06-130, the nuts 06-140 and the cover oxygen container assy 06-110 from the angle 06-120.

(e) Remove the screws 06-160, the washers 06-170 and the angle 06-120 from the aft side wall assembly 06-010.

(f) Remove the ground cable from the oxygen container assy 06-155.

(g) Remove the screws 06-160, the washers 06-170 and the oxygen container assy 06-155 from the angles 06-150.

(h) Remove the screws 06-160, the washers 06-170 and the angles 06-150 from the aft side wall assembly 06-010.

(i) Remove the screws 06-440, 06-460, the washers 06-430 and the angle 06-420 from the aft side wall assembly 06-010.

(j) Remove the screws 06-400, the nuts 06-410, the plates 06-390 and the single door emergency unlocking device assembly 06-320 from the post assembly 06-190.

(k) Disassemble the single door emergency unlocking device assembly 06-320 as follows:

WARNING: **BE CAREFUL WHEN YOU USE MATERIAL NO. 08-007 SEALANT, HIGH TEMPERATURE. OBEY THE MATERIAL MANUFACTURER'S INSTRUCTIONS.**

1 Remove the bolt 06-380 and the emergency unlocking-device strike 06-340 from the emergency unlocking-device housing 06-330.

NOTE: **If necessary use a hot air blower to heat up the Material No. 08-007 Sealant, High Temperature to remove the bolt 06-380.**

WARNING: **BE CAREFUL WHEN YOU USE MATERIAL NO. 08-007 SEALANT, HIGH TEMPERATURE. OBEY THE MATERIAL MANUFACTURER'S INSTRUCTIONS.**

2 Remove the pin 06-360, the snap catch 06-370 and the emergency unlocking-device pivot 06-350 from the emergency unlocking-device housing 06-330.

NOTE: **If necessary use a hot air blower to heat up the Material No. 08-007 Sealant, High Temperature to remove the snap catch 06-370 and the pin 06-360.**

(l) Remove the caps 06-210, the screws 06-200, 06-220, the washers 06-170 and the post assembly 06-190.

(m) Disassemble the post assembly 06-190 as follows:

1 Remove the screws 06-193.

(n) Remove the screws 06-030 and the fittings 06-020 from the brackets 06-013.

(o) Remove the brackets 06-013, 06-017 from the aft side wall assembly 06-010.

SUB TASK 25-41-51-010-104-F01
D2549010501000 R225401107-000

6. Removal of the Side Wall (06-1)

NOTE: **See TABLE 3037 for the references for the replacement procedures of permanent installed parts.**

IPL FIG. ITEM	COMPONENT PART NAME	IPL FIG. ITEM	REPLACEMENT PART NAME	SEE REPAIR TASK
06-001 06-190	Side Wall Post Assembly	06-195	Nut	Replacement of the Riveted Parts

Table 3037
Reference list for the replacement of permanent installed parts

(a) Remove and disassemble the handle assembly 06-100 as follows:

1 Remove the security pins 06-102 from the handle assembly 06-100.

2 Remove the handle assembly 06-100 from the aft side wall assembly 06-010.

3 Remove the special screws 06-101 and the special washers 06-103 from the aft side wall assembly 06-010.

(b) Remove the screws 06-230, the washers 06-240 and the support 06-250 from the aft side wall assembly 06-010.

(c) Remove the studs 06-180 and the washers 06-170 from the cover oxygen container assy 06-110.

(d) Remove the screws 06-130, the nuts 06-140 and the cover oxygen container assy 06-110 from the angle 06-120.

(e) Remove the screws 06-160, the washers 06-170 and the angle 06-120 from the aft side wall assembly 06-010.

(f) Remove the ground cable from the oxygen container assy 06-155.

(g) Remove the screws 06-160, 06-162, the washers 06-170, 06-172, and the oxygen container assy 06-155 from the angles 06-150.

(h) Remove the screws 06-160, the washers 06-170 and the angles 06-150 from the aft side wall assembly 06-010.

(i) Remove the screws 06-400, the nuts 06-410, the plates 06-390 and the single door emergency unlocking device assembly 06-320 from the post assembly 06-190.

(j) Disassemble the single door emergency unlocking device assembly 06-320 as follows:

WARNING: BE CAREFUL WHEN YOU USE MATERIAL NO. 08-007 SEALANT, HIGH TEMPERATURE. OBEY THE MATERIAL MANUFACTURER'S INSTRUCTIONS.

1 Remove the bolt 06-380 and the emergency unlocking-device strike 06-340 from the emergency unlocking-device housing 06-330.

NOTE: If necessary use a hot air blower to heat up the Material No. 08-007 Sealant, High Temperature to remove the bolt 06-380.

WARNING: BE CAREFUL WHEN YOU USE MATERIAL NO. 08-007 SEALANT, HIGH TEMPERATURE. OBEY THE MATERIAL MANUFACTURER'S INSTRUCTIONS.

2 Remove the pin 06-360, the snap catch 06-370 and the emergency unlocking-device pivot 06-350 from the emergency unlocking-device housing 06-330.

NOTE: If necessary use a hot air blower to heat up the Material No. 08-007 Sealant, High Temperature to remove the snap catch 06-370 and the pin 06-360.

(k) Remove the caps 06-210, the screws 06-200, 06-220, the washers 06-170 and the post assembly 06-190.

(l) Disassemble the post assembly 06-190 as follows:

1 Remove the screws 06-193.

(m) Remove the screws 06-030 and the fittings 06-020 from the brackets 06-013.

(n) Remove the brackets 06-013, 06-017 from the aft side wall assembly 06-010.

SUB TASK 25-41-51-010-104-G01
D2549010502400

7. Removal of the Side Wall (06-1)

NOTE: **See TABLE 3038 for the references for the replacement procedures of permanent installed parts.**

IPL FIG. ITEM	COMPONENT PART NAME	IPL FIG. ITEM	REPLACEMENT PART NAME	SEE REPAIR TASK
06-001 06-190	Side Wall Post Assembly	06-195	Nut	Replacement of the Riveted Parts

Table 3038
Reference list for the replacement of permanent installed parts

(a) Remove and disassemble the handle assembly 06-100 as follows:

1 Remove the security pins 06-102 from the handle assembly 06-100.

2 Remove the handle assembly 06-100 from the aft side wall assembly 06-010.

3 Remove the special screws 06-101 and the special washers 06-103 from the aft side wall assembly 06-010.

(b) Remove the screws 06-230, the washers 06-240 and the support 06-250 from the aft side wall assembly 06-010.

(c) Remove the studs 06-180 and the washers 06-170 from the cover oxygen container assy 06-110.

(d) Remove the screws 06-130, the nuts 06-140 and the cover oxygen container assy 06-110 from the angle 06-120.

(e) Remove the screws 06-160, the washers 06-170 and the angle 06-120 from the aft side wall assembly 06-010.

(f) Remove the ground cable from the oxygen container assy 06-155.

(g) Remove the screws 06-160, the washers 06-170 and the oxygen container assy 06-155 from the angles 06-150.

(h) Remove the screws 06-160, the washers 06-170 and the angles 06-150 from the aft side wall assembly 06-010.

(i) Remove the screws 06-400, the nuts 06-410, the plates 06-390 and the single door emergency unlocking device assembly 06-320 from the post assembly 06-190.

(j) Disassemble the single door emergency unlocking device assembly 06-320 as follows:

WARNING: BE CAREFUL WHEN YOU USE MATERIAL NO. 08-007 SEALANT, HIGH TEMPERATURE. OBEY THE MATERIAL MANUFACTURER'S INSTRUCTIONS.

1 Remove the bolt 06-380 and the emergency unlocking-device strike 06-340 from the emergency unlocking-device housing 06-330.

NOTE: If necessary use a hot air blower to heat up the Material No. 08-007 Sealant, High Temperature to remove the bolt 06-380.

WARNING: BE CAREFUL WHEN YOU USE MATERIAL NO. 08-007 SEALANT, HIGH TEMPERATURE. OBEY THE MATERIAL MANUFACTURER'S INSTRUCTIONS.

2 Remove the pin 06-360, the snap catch 06-370 and the emergency unlocking-device pivot 06-350 from the emergency unlocking-device housing 06-330.

NOTE: If necessary use a hot air blower to heat up the Material No. 08-007 Sealant, High Temperature to remove the snap catch 06-370 and the pin 06-360.

(k) Remove the caps 06-210, the screws 06-200, 06-220, the washers 06-170 and the post assembly 06-190.

(l) Disassemble the post assembly 06-190 as follows:

1 Remove the screws 06-193.

(m) Remove the screws 06-030 and the fittings 06-020 from the brackets 06-013.

(n) Remove the brackets 06-013, 06-017 from the aft side wall assembly 06-010.

SUB TASK 25-41-51-010-104-H01
D2549010500400 D2549010501600 D2549010502800 D2549010503400 D2549010506200

8. Removal of the Side Wall (06-1)

NOTE: **See TABLE 3039 for the references for the replacement procedures of permanent installed parts.**

IPL FIG. ITEM	COMPONENT PART NAME	IPL FIG. ITEM	REPLACEMENT PART NAME	SEE REPAIR TASK
06-001 06-190	Side Wall Post Assembly	06-195	Nut	Replacement of the Riveted Parts

Table 3039
Reference list for the replacement of permanent installed parts

(a) Remove and disassemble the handle assembly 06-100 as follows:

1 Remove the security pins 06-102 from the handle assembly 06-100.

2 Remove the handle assembly 06-100 from the aft side wall assembly 06-010.

3 Remove the special screws 06-101 and the special washers 06-103 from the aft side wall assembly 06-010.

(b) Remove and disassemble the handle assembly 06-270 as follows:

1 Remove the security pins 06-290 from the handle assembly 06-270.

2 Remove the handle assembly 06-270 from the aft side wall assembly 06-010.

3 Remove the special screws 06-280 and the special washers 06-300 from the aft side wall assembly 06-010.

(c) Remove the studs 06-180 and the washers 06-170 from the cover oxygen container assy 06-110.

(d) Remove the screws 06-130, the nuts 06-140 and the cover oxygen container assy 06-110 from the angle 06-120.

(e) Remove the screws 06-160, the washers 06-170 and the angle 06-120 from the aft side wall assembly 06-010.

(f) Remove the ground cable from the oxygen container assy 06-155.

(g) Remove the screws 06-160, the washers 06-170 and the oxygen container assy 06-155 from the angles 06-150.

(h) Remove the screws 06-160, the washers 06-170 and the angles 06-150 from the aft side wall assembly 06-010.

(i) Remove the caps 06-210, the screws 06-200, 06-220, the washers 06-170 and the post assembly 06-190.

(j) Disassemble the post assembly 06-190 as follows:

1 Remove the screws 06-193.

(k) Remove the screws 06-030 and the fittings 06-020 from the brackets 06-013.

(l) Remove the brackets 06-013, 06-017 from the aft side wall assembly 06-010.

SUB TASK 25-41-51-010-104-J01
D2549030606000 R225401611-008

9. Removal of the Side Wall (06-1)

NOTE: **See TABLE 3040 for the references for the replacement procedures of permanent installed parts.**

IPL FIG. ITEM	COMPONENT PART NAME	IPL FIG. ITEM	REPLACEMENT PART NAME	SEE REPAIR TASK
06-001 06-190	Side Wall Post Assembly	06-195	Nut	Replacement of the Riveted Parts

Table 3040
Reference list for the replacement of permanent installed parts

(a) Remove and disassemble the handle assembly 06-100 as follows:

1 Remove the security pins 06-102 from the handle assembly 06-100.

2 Remove the handle assembly 06-100 from the aft side wall assembly 06-010.

3 Remove the special screws 06-101 and the special washers 06-103 from the aft side wall assembly 06-010.

(b) Remove and disassemble the handle assembly 06-270 as follows:

1 Remove the security pins 06-290 from the handle assembly 06-270.

2 Remove the handle assembly 06-270 from the aft side wall assembly 06-010.

3 Remove the special screws 06-280 and the special washers 06-300 from the aft side wall assembly 06-010.

(c) Remove the studs 06-180 and the washers 06-170 from the cover oxygen container assy 06-110.

(d) Remove the screws 06-130, the nuts 06-140 and the cover oxygen container assy 06-110 from the angle 06-120.

(e) Remove the screws 06-160, the washers 06-170 and the angle 06-120 from the aft side wall assembly 06-010.

(f) Remove the ground cable from the oxygen container assy 06-155.

(g) Remove the screws 06-160, the washers 06-170 and the oxygen container assy 06-155 from the angles 06-150.

(h) Remove the screws 06-160, the washers 06-170 and the angles 06-150 from the aft side wall assembly 06-010.

(i) Remove the caps 06-210, the screws 06-200, 06-220, the washers 06-170 and the post assembly 06-190.

(j) Disassemble the post assembly 06-190 as follows:

1 Remove the screws 06-193.

(k) Remove the screws 06-030 and the fittings 06-020 from the brackets 06-013.

(l) Remove the brackets 06-013, 06-017 from the aft side wall assembly 06-010.

SUB TASK 25-41-51-010-104-K01
D2549020500000 D2549020500600 D2549020501000 D2549020501400 D2549020502800 D2549020503200 D2549020504800

10. Removal of the Side Wall (06-1)

NOTE: **See TABLE 3041 for the references for the replacement procedures of permanent installed parts.**

IPL FIG. ITEM	COMPONENT PART NAME	IPL FIG. ITEM	REPLACEMENT PART NAME	SEE REPAIR TASK
06-001 06-190	Side Wall Post Assembly	06-195	Nut	Replacement of the Riveted Parts

Table 3041
Reference list for the replacement of permanent installed parts

(a) Remove and disassemble the handle assembly 06-100 as follows:

1 Remove the security pins 06-102 from the handle assembly 06-100.

2 Remove the handle assembly 06-100 from the aft side wall assembly 06-010.

3 Remove the special screws 06-101 and the special washers 06-103 from the aft side wall assembly 06-010.

(b) Remove the studs 06-180 and the washers 06-170 from the cover oxygen container assy 06-110.

(c) Remove the screws 06-130, the nuts 06-140 and the cover oxygen container assy 06-110 from the angle 06-120.

(d) Remove the screws 06-160, the washers 06-170 and the angle 06-120 from the aft side wall assembly 06-010.

(e) Remove the ground cable from the oxygen container assy 06-155.

(f) Remove the screws 06-160, the washers 06-170 and the oxygen container assy 06-155 from the angles 06-150.

(g) Remove the screws 06-160, the washers 06-170 and the angles 06-150 from the aft side wall assembly 06-010.

(h) Remove the screws 06-440, 06-460, the washers 06-430 and the angle 06-420 from the aft side wall assembly 06-010.

(i) Remove the caps 06-210, the screws 06-200, 06-220, the washers 06-170 and the post assembly 06-190.

(j) Disassemble the post assembly 06-190 as follows:

1 Remove the screws 06-193.

(k) Remove the screws 06-030 and the fittings 06-020 from the brackets 06-013.

(l) Remove the brackets 06-013, 06-017 from the aft side wall assembly 06-010.

TASK 25-41-51-000-804-B01
D2549010500000 D2549010502000 D2549010504800 D2549010505400 D2549010505800 D2549020500200 D2549020503800 D2549020505000 D2549020600200 D2549020601200 D2549020601400 D2549020601600 D2549020802000 D2549030500200 D2549030500400 D2549030501200 D2549030501600 D2549030503200 R225401133-000 R225401188-000 R225401188-002 R225401629-000 R225401629-002

21. Removal of the Side Wall

A. General

A complete disassembly of the component is not necessary and not recommended.

Do not disassemble the component more than it is necessary for:

- Cleaning
- Visual Inspection
- Replacement of defective parts.

B. Job Set-up Information
(1) Consumable Materials

REFERENCE	DESIGNATION
08-007	Sealant, High Temperature
08-017A	Adhesive Structuralflexible

Table 3042
Consumable Materials

(2) Fixtures, Tools, Test and Support Equipment

REFERENCE	DESIGNATION
	hot air blower

Table 3043
Fixtures, Tools, Test and Support Equipment

C. Procedure

WARNING: **BE CAREFUL WHEN YOU USE SOLVENTS/CLEANING AGENTS, SEALANTS AND OTHER MATERIALS. OBEY THE MATERIAL MANUFACTURER'S INSTRUCTIONS AND THE LOCAL REGULATIONS. MAKE SURE THAT THERE IS A GOOD FLOW OF AIR THROUGH THE WORK AREA. DO NOT BREATHE THE FUMES. DO NOT SMOKE. DO NOT USE THESE MATERIALS NEAR A FLAME, SPARKS OR SOURCES OF HEAT. USE PROTECTIVE CLOTHING, GOGGLES AND GLOVES. IF YOU GET ONE OF THESE MATERIALS ON YOUR SKIN OR IN YOUR EYES, FLUSH IT AWAY WITH A FLOW OF CLEAN WATER. IF YOU GET ONE OF THESE MATERIALS IN YOUR MOUTH, GET IMMEDIATE MEDICAL AID. IN GENERAL, THESE MATERIALS ARE POISONOUS, FLAMMABLE AND SKIN IRRITANTS.**

WARNING: **KEEP ALL HYDROCARBONS (FUELS, LUBRICANTS, ETC.) AWAY FROM ALL SOURCES OF OXYGEN. OXYGEN BECOMES EXPLOSIVE WHEN IT TOUCHES HYDROCARBONS.**

WARNING: **TO PREVENT CONTAMINATION OF THE OXYGEN SYSTEM, MAKE SURE THAT YOUR HANDS AND ALL THE TOOLS ARE CLEAN.**

CAUTION: **PUT DRY, CLEAN, METAL OR PLASTIC PLUGS ON ALL PIPES OR UNITS REMOVED TEMPORARILY. PUT EACH PIPE OR UNIT IN A SEALED VINYL BAG. UNWANTED MATERIALS IN THE OXYGEN SYSTEM CAN DAMAGE THE SYSTEM.**

CAUTION: **DO ALL THE WORK ON A CLEAN, SOFT SURFACE TO PREVENT DAMAGE TO THE COMPONENTS.**

SUB TASK 25-41-51-010-021-A01
D2549020601200

1. Removal of the Side Wall (06A-1)

NOTE: **See TABLE 3044 for the references for the replacement procedures of permanent installed parts.**

IPL FIG. ITEM	COMPONENT PART NAME	IPL FIG. ITEM	REPLACEMENT PART NAME	SEE REPAIR TASK
06A-001 06A-210	Side Wall Post Assembly	06A-215	Nut	Replacement of the Riveted Parts

Table 3044
Reference list for the replacement of permanent installed parts

(a) Remove and disassemble the handle assembly 06A-110 as follows:

1 Remove the security pins 06A-112 from the handle assembly 06A-110.

2 Remove the handle assembly 06A-110 from the aft side wall assembly 06A-010.

3 Remove the special screws 06A-111 and the special washers 06A-113 from the aft side wall assembly 06A-010.

(b) Remove the toilet seat cover dispenser 06A-250 from the screws 06A-260.

(c) Remove the screws 06A-260 from the aft side wall assembly 06A-010.

(d) Remove the studs 06A-200 and the washers 06A-190 from the cover oxygen container assy 06A-120.

(e) Remove the screws 06A-140, the nuts 06A-150 and the cover oxygen container assy 06A-120 from the angle 06A-130.

(f) Remove the screws 06A-180, the washers 06A-190 and the angle 06A-130 from the aft side wall assembly 06A-010.

(g) Remove the ground cable from the oxygen container assy 06A-170.

(h) Remove the screws 06A-180, the washers 06A-190 and the oxygen container assy 06A-170 from the angles 06A-160.

(i) Remove the screws 06A-180, the washers 06A-190 and the angles 06A-160 from the aft side wall assembly 06A-010.

(j) Remove the screws 06A-300, 06A-320, the washers 06A-310 and the angle 06A-290 from the aft side wall assembly 06A-010.

(k) Remove the caps 06A-230, the screws 06A-220, 06A-240, the washers 06A-190 and the post assembly 06A-210.

(l) Disassemble the post assembly 06A-210 as follows:

1 Remove the screws 06A-213.

(m) Remove the screws 06A-030, 06A-033, 06A-035 and the fittings 06A-021, 06A-025 from the brackets 06A-013.

(n) Remove the brackets 06A-013, 06A-017 from the aft side wall assembly 06A-010.

SUB TASK 25-41-51-010-021-B01
D2549030500200 D2549030501600 D2549030503200

2. Removal of the Side Wall (06A-1)

NOTE: **See TABLE 3045 for the references for the replacement procedures of permanent installed parts.**

IPL FIG. ITEM	COMPONENT PART NAME	IPL FIG. ITEM	REPLACEMENT PART NAME	SEE REPAIR TASK
06A-001 06A-210	Side Wall Post Assembly	06A-215	Nut	Replacement of the Riveted Parts

Table 3045
Reference list for the replacement of permanent installed parts

(a) Remove and disassemble the handle assembly 06A-110 as follows:

1 Remove the security pins 06A-112 from the handle assembly 06A-110.

2 Remove the handle assembly 06A-110 from the aft side wall assembly 06A-010.

3 Remove the special screws 06A-111 and the special washers 06A-113 from the aft side wall assembly 06A-010.

(b) Remove the screws 06A-221, the washers 06A-191 and the support 06A-270 from the aft side wall assembly 06A-010.

(c) Remove the studs 06A-200 and the washers 06A-190 from the cover oxygen container assy 06A-120.

(d) Remove the screws 06A-140, the nuts 06A-150 and the cover oxygen container assy 06A-120 from the angle 06A-130.

(e) Remove the screws 06A-180, the washers 06A-190 and the angle 06A-130 from the aft side wall assembly 06A-010.

(f) Remove the ground cable from the oxygen container assy 06A-170.

(g) Remove the screws 06A-180, the washers 06A-190 and the oxygen container assy 06A-170 from the angles 06A-160.

(h) Remove the screws 06A-180, the washers 06A-190 and the angles 06A-160 from the aft side wall assembly 06A-010.

(i) Remove the caps 06A-230, the screws 06A-220, 06A-240, the washers 06A-190 and the post assembly 06A-210.

(j) Disassemble the post assembly 06A-210 as follows:

1 Remove the screws 06A-213.

(k) Remove the screws 06A-030 and the fittings 06A-020 from the brackets 06A-013.

(l) Remove the brackets 06A-013, 06A-017 from the aft side wall assembly 06A-010.

SUB TASK 25-41-51-010-021-C01
D2549010502000

3. Removal of the Side Wall (06A-1)

NOTE: **See TABLE 3046 for the references for the replacement procedures of permanent installed parts.**

More data for bonded parts are given in column SEE REPAIR TASK. Use the data for the selection of the related repair solution.

IPL FIG. ITEM	COMPONENT PART NAME	IPL FIG. ITEM	REPLACEMENT PART NAME	SEE REPAIR TASK
06A-001 06A-210	Side Wall Post Assembly	06A-215	Nut	Replacement of the Riveted Parts
06A-001	Side Wall	06A-440	Reinforcing Strip	Replacement of the Bonded Parts Material No. 08-017A Adhesive Structuralflexible

Table 3046
Reference list for the replacement of permanent installed parts

(a) Remove and disassemble the handle assembly 06A-110 as follows:

1 Remove the security pins 06A-112 from the handle assembly 06A-110.

2 Remove the handle assembly 06A-110 from the aft side wall assembly 06A-010.

3 Remove the special screws 06A-111 and the special washers 06A-113 from the aft side wall assembly 06A-010.

(b) Remove the screws 06A-221, the washers 06A-191 and the support 06A-270 from the aft side wall assembly 06A-010.

(c) Remove the studs 06A-200 and the washers 06A-190 from the cover oxygen container assy 06A-120.

(d) Remove the screws 06A-140, the nuts 06A-150 and the cover oxygen container assy 06A-120 from the angle 06A-130.

(e) Remove the screws 06A-180, the washers 06A-190 and the angle 06A-130 from the aft side wall assembly 06A-010.

(f) Remove the ground cable from the oxygen container assy 06A-170.

(g) Remove the screws 06A-180, the washers 06A-190 and the oxygen container assy 06A-170 from the angles 06A-160.

(h) Remove the screws 06A-180, the washers 06A-190 and the angles 06A-160 from the aft side wall assembly 06A-010.

(i) Remove the screws 06A-420, the nuts 06A-430, the plates 06A-410 and the single door emergency unlocking device assembly 06A-340 from the post assembly 06A-210.

(j) Disassemble the single door emergency unlocking device assembly 06A-340 as follows:

WARNING: BE CAREFUL WHEN YOU USE MATERIAL NO. 08-007 SEALANT, HIGH TEMPERATURE. OBEY THE MATERIAL MANUFACTURER'S INSTRUCTIONS.

1 Remove the bolt 06A-400 and the emergency unlocking-device strike 06A-360 from the emergency unlocking-device housing 06A-350.

NOTE: If necessary use a hot air blower to heat up the Material No. 08-007 Sealant, High Temperature to remove the bolt 06A-400.

WARNING: **BE CAREFUL WHEN YOU USE MATERIAL NO. 08-007 SEALANT, HIGH TEMPERATURE. OBEY THE MATERIAL MANUFACTURER'S INSTRUCTIONS.**

2 Remove the pin 06A-380, the snap catch 06A-390 and the emergency unlocking-device pivot 06A-370 from the emergency unlocking-device housing 06A-350.

NOTE: **If necessary use a hot air blower to heat up the Material No. 08-007 Sealant, High Temperature to remove the snap catch 06A-390 and the pin 06A-380.**

(k) Remove the caps 06A-230, the screws 06A-220, 06A-240, the washers 06A-190 and the post assembly 06A-210.

(l) Disassemble the post assembly 06A-210 as follows:

1 Remove the screws 06A-213.

(m) Remove the screws 06A-030 from the brackets 06A-013.

(n) Remove the brackets 06A-013, 06A-017 from the aft side wall assembly 06A-010.

SUB TASK 25-41-51-010-021-D01
D2549010505800

4. Removal of the Side Wall (06A-1)

NOTE: **See TABLE 3047 for the references for the replacement procedures of permanent installed parts.**

IPL FIG. ITEM	COMPONENT PART NAME	IPL FIG. ITEM	REPLACEMENT PART NAME	SEE REPAIR TASK
06A-001 06A-210	Side Wall Post Assembly	06A-215	Nut	Replacement of the Riveted Parts

Table 3047
Reference list for the replacement of permanent installed parts

(a) Remove and disassemble the handle assembly 06A-110 as follows:

1 Remove the security pins 06A-112 from the handle assembly 06A-110.

2 Remove the handle assembly 06A-110 from the aft side wall assembly 06A-010.

3 Remove the special screws 06A-111 and the special washers 06A-113 from the aft side wall assembly 06A-010.

(b) Remove the toilet seat cover dispenser 06A-250 from the screws 06A-260.

(c) Remove the screws 06A-260 from the aft side wall assembly 06A-010.

(d) Remove the studs 06A-200 and the washers 06A-190 from the cover oxygen container assy 06A-120.

(e) Remove the screws 06A-140, the nuts 06A-150 and the cover oxygen container assy 06A-120 from the angle 06A-130.

(f) Remove the screws 06A-180, the washers 06A-190 and the angle 06A-130 from the aft side wall assembly 06A-010.

(g) Remove the ground cable from the oxygen container assy 06A-170.

(h) Remove the screws 06A-180, the washers 06A-190 and the oxygen container assy 06A-170 from the angles 06A-160.

(i) Remove the screws 06A-180, the washers 06A-190 and the angles 06A-160 from the aft side wall assembly 06A-010.

(j) Remove the caps 06A-230, the screws 06A-220, 06A-240, the washers 06A-190 and the post assembly 06A-210.

(k) Disassemble the post assembly 06A-210 as follows:

1 Remove the screws 06A-213.

(l) Remove the screws 06A-030 and the fittings 06A-020 from the brackets 06A-013.

(m) Remove the brackets 06A-013, 06A-017 from the aft side wall assembly 06A-010.

SUB TASK 25-41-51-010-021-E01
D2549010500000 D2549020601400 D2549020802000 R225401629-000 R225401629-002

5. Removal of the Side Wall (06A-1)

NOTE: **See TABLE 3048 for the references for the replacement procedures of permanent installed parts.**

IPL FIG. ITEM	COMPONENT PART NAME	IPL FIG. ITEM	REPLACEMENT PART NAME	SEE REPAIR TASK
06A-001 06A-210	Side Wall Post Assembly	06A-215	Nut	Replacement of the Riveted Parts

Table 3048
Reference list for the replacement of permanent installed parts

(a) Remove and disassemble the handle assembly 06A-110 as follows:

1 Remove the security pins 06A-112 from the handle assembly 06A-110.

2 Remove the handle assembly 06A-110 from the aft side wall assembly 06A-010.

3 Remove the special screws 06A-111 and the special washers 06A-113 from the aft side wall assembly 06A-010.

(b) Remove the studs 06A-200 and the washers 06A-190 from the cover oxygen container assy 06A-120.

(c) Remove the screws 06A-140, the nuts 06A-150 and the cover oxygen container assy 06A-120 from the angle 06A-130.

(d) Remove the screws 06A-180, the washers 06A-190 and the angle 06A-130 from the aft side wall assembly 06A-010.

(e) Remove the ground cable from the oxygen container assy 06A-170.

(f) Remove the screws 06A-180, 06A-182, the washers 06A-190, 06A-192 and the oxygen container assy 06A-170 from the angles 06A-160.

(g) Remove the screws 06A-180, the washers 06A-190 and the angles 06A-160 from the aft side wall assembly 06A-010.

(h) Remove the screws 06A-420, the nuts 06A-430, the plates 06A-410 and the single door emergency unlocking device assembly 06A-340 from the post assembly 06A-210.

(i) Disassemble the single door emergency unlocking device assembly 06A-340 as follows:

WARNING: BE CAREFUL WHEN YOU USE MATERIAL NO. 08-007 SEALANT, HIGH TEMPERATURE. OBEY THE MATERIAL MANUFACTURER'S INSTRUCTIONS.

1 Remove the bolt 06A-400 and the emergency unlocking-device strike 06A-360 from the emergency unlocking-device housing 06A-350.

NOTE: If necessary use a hot air blower to heat up the Material No. 08-007 Sealant, High Temperature to remove the bolt 06A-400.

WARNING: BE CAREFUL WHEN YOU USE MATERIAL NO. 08-007 SEALANT, HIGH TEMPERATURE. OBEY THE MATERIAL MANUFACTURER'S INSTRUCTIONS.

2 Remove the pin 06A-380, the snap catch 06A-390 and the emergency unlocking-device pivot 06A-370 from the emergency unlocking-device housing 06A-350.

NOTE: If necessary use a hot air blower to heat up the Material No. 08-007 Sealant, High Temperature to remove the snap catch 06A-390 and the pin 06A-380.

(j) Remove the caps 06A-230, the screws 06A-220, 06A-240, the washers 06A-190 and the post assembly 06A-210.

(k) Disassemble the post assembly 06A-210 as follows:

1 Remove the screws 06A-213.

(l) Remove the screws 06A-030 and the fittings 06A-020 from the brackets 06A-013.

(m) Remove the brackets 06A-013, 06A-017 from the aft side wall assembly 06A-010.

SUB TASK 25-41-51-010-021-F01
D2549020500200

6. Removal of the Side Wall (06A-1)

NOTE: **See TABLE 3049 for the references for the replacement procedures of permanent installed parts.**

IPL FIG. ITEM	COMPONENT PART NAME	IPL FIG. ITEM	REPLACEMENT PART NAME	SEE REPAIR TASK
06A-001 06A-210	Side Wall Post Assembly	06A-215	Nut	Replacement of the Riveted Parts

Table 3049
Reference list for the replacement of permanent installed parts

(a) Remove and disassemble the handle assembly 06A-110 as follows:

1 Remove the security pins 06A-112 from the handle assembly 06A-110.

2 Remove the handle assembly 06A-110 from the aft side wall assembly 06A-010.

3 Remove the special screws 06A-111 and the special washers 06A-113 from the aft side wall assembly 06A-010.

(b) Remove the studs 06A-200 and the washers 06A-190 from the cover oxygen container assy 06A-120.

(c) Remove the screws 06A-140, the nuts 06A-150 and the cover oxygen container assy 06A-120 from the angle 06A-130.

(d) Remove the screws 06A-180, the washers 06A-190 and the angle 06A-130 from the aft side wall assembly 06A-010.

(e) Remove the ground cable from the oxygen container assy 06A-170.

(f) Remove the screws 06A-180, the washers 06A-190 and the oxygen container assy 06A-170 from the angles 06A-160.

(g) Remove the screws 06A-180, the washers 06A-190 and the angles 06A-160 from the aft side wall assembly 06A-010.

(h) Remove the screws 06A-420, the nuts 06A-430, the plates 06A-410 and the single door emergency unlocking device assembly 06A-340 from the post assembly 06A-210.

(i) Disassemble the single door emergency unlocking device assembly 06A-340 as follows:

WARNING: BE CAREFUL WHEN YOU USE MATERIAL NO. 08-007 SEALANT, HIGH TEMPERATURE. OBEY THE MATERIAL MANUFACTURER'S INSTRUCTIONS.

1 Remove the bolt 06A-400 and the emergency unlocking-device strike 06A-360 from the emergency unlocking-device housing 06A-350.

NOTE: If necessary use a hot air blower to heat up the Material No. 08-007 Sealant, High Temperature to remove the bolt 06A-400.

WARNING: BE CAREFUL WHEN YOU USE MATERIAL NO. 08-007 SEALANT, HIGH TEMPERATURE. OBEY THE MATERIAL MANUFACTURER'S INSTRUCTIONS.

2 Remove the pin 06A-380, the snap catch 06A-390 and the emergency unlocking-device pivot 06A-370 from the emergency unlocking-device housing 06A-350.

NOTE: If necessary use a hot air blower to heat up the Material No. 08-007 Sealant, High Temperature to remove the snap catch 06A-390 and the pin 06A-380.

(j) Remove the caps 06A-230, the screws 06A-220, 06A-240, the washers 06A-190 and the post assembly 06A-210.

(k) Disassemble the post assembly 06A-210 as follows:

1 Remove the screws 06A-213.

(l) Remove the screws 06A-030 and the fittings 06A-020 from the brackets 06A-013.

(m) Remove the brackets 06A-013, 06A-017 from the aft side wall assembly 06A-010.

SUB TASK 25-41-51-010-021-G01
D2549010504800 D2549020503800

7. Removal of the Side Wall (06A-1)

NOTE: **See TABLE 3050 for the references for the replacement procedures of permanent installed parts.**

More data for bonded parts are given in column SEE REPAIR TASK. Use the data for the selection of the related repair solution.

IPL FIG. ITEM	COMPONENT PART NAME	IPL FIG. ITEM	REPLACEMENT PART NAME	SEE REPAIR TASK
06A-001 06A-210	Side Wall Post Assembly	06A-215	Nut	Replacement of the Riveted Parts
06A-001	Side Wall	06A-440	Reinforcing Strip	Replacement of the Bonded Parts Material No. 08-017A Adhesive Structuralflexible

Table 3050
Reference list for the replacement of permanent installed parts

(a) Remove and disassemble the handle assembly 06A-110 as follows:

1 Remove the security pins 06A-112 from the handle assembly 06A-110.

2 Remove the handle assembly 06A-110 from the aft side wall assembly 06A-010.

3 Remove the special screws 06A-111 and the special washers 06A-113 from the aft side wall assembly 06A-010.

(b) Remove the studs 06A-200 and the washers 06A-190 from the cover oxygen container assy 06A-120.

(c) Remove the screws 06A-140, the nuts 06A-150 and the cover oxygen container assy 06A-120 from the angle 06A-130.

(d) Remove the screws 06A-180, the washers 06A-190 and the angle 06A-130 from the aft side wall assembly 06A-010.

(e) Remove the ground cable from the oxygen container assy 06A-170.

(f) Remove the screws 06A-180, the washers 06A-190 and the oxygen container assy 06A-170 from the angles 06A-160.

(g) Remove the screws 06A-180, the washers 06A-190 and the angles 06A-160 from the aft side wall assembly 06A-010.

(h) Remove the caps 06A-230, the screws 06A-220, 06A-240, the washers 06A-190 and the post assembly 06A-210.

(i) Disassemble the post assembly 06A-210 as follows:

1 Remove the screws 06A-213.

(j) Remove the screws 06A-030 and the fittings 06A-020 from the brackets 06A-013.

(k) Remove the brackets 06A-013, 06A-017 from the aft side wall assembly 06A-010.

SUB TASK 25-41-51-010-021-H01
D2549010505400 D2549020505000 D2549020600200

8. Removal of the Side Wall (06A-1)

NOTE: **See TABLE 3051 for the references for the replacement procedures of permanent installed parts.**

IPL FIG. ITEM	COMPONENT PART NAME	IPL FIG. ITEM	REPLACEMENT PART NAME	SEE REPAIR TASK
06A-001 06A-210	Side Wall Post Assembly	06A-215	Nut	Replacement of the Riveted Parts

Table 3051
Reference list for the replacement of permanent installed parts

(a) Remove and disassemble the handle assembly 06A-110 as follows:

1 Remove the security pins 06A-112 from the handle assembly 06A-110.

2 Remove the handle assembly 06A-110 from the aft side wall assembly 06A-010.

3 Remove the special screws 06A-111 and the special washers 06A-113 from the aft side wall assembly 06A-010.

(b) Remove the studs 06A-200 and the washers 06A-190 from the cover oxygen container assy 06A-120.

(c) Remove the screws 06A-140, the nuts 06A-150 and the cover oxygen container assy 06A-120 from the angle 06A-130.

(d) Remove the screws 06A-180, the washers 06A-190 and the angle 06A-130 from the aft side wall assembly 06A-010.

(e) Remove the ground cable from the oxygen container assy 06A-170.

(f) Remove the screws 06A-180, the washers 06A-190 and the oxygen container assy 06A-170 from the angles 06A-160.

(g) Remove the screws 06A-180, the washers 06A-190 and the angles 06A-160 from the aft side wall assembly 06A-010.

(h) Remove the caps 06A-230, the screws 06A-220, 06A-240, the washers 06A-190 and the post assembly 06A-210.

(i) Disassemble the post assembly 06A-210 as follows:

1 Remove the screws 06A-213.

(j) Remove the screws 06A-030 and the fittings 06A-020 from the brackets 06A-013.

(k) Remove the brackets 06A-013, 06A-017 from the aft side wall assembly 06A-010.

SUB TASK 25-41-51-010-021-J01
D2549030500400 D2549030501200 R225401188-000 R225401188-002

9. Removal of the Side Wall (06A-1)

NOTE: **See TABLE 3052 for the references for the replacement procedures of permanent installed parts.**

IPL FIG. ITEM	COMPONENT PART NAME	IPL FIG. ITEM	REPLACEMENT PART NAME	SEE REPAIR TASK
06A-001 06A-210	Side Wall Post Assembly	06A-215	Nut	Replacement of the Riveted Parts

Table 3052
Reference list for the replacement of permanent installed parts

(a) Remove and disassemble the handle assembly 06A-110 as follows:

1 Remove the security pins 06A-112 from the handle assembly 06A-110.

2 Remove the handle assembly 06A-110 from the aft side wall assembly 06A-010.

3 Remove the special screws 06A-111 and the special washers 06A-113 from the aft side wall assembly 06A-010.

(b) Remove the studs 06A-200 and the washers 06A-190 from the cover oxygen container assy 06A-120.

(c) Remove the screws 06A-140, the nuts 06A-150 and the cover oxygen container assy 06A-120 from the angle 06A-130.

(d) Remove the screws 06A-180, the washers 06A-190 and the angle 06A-130 from the aft side wall assembly 06A-010.

(e) Remove the ground cable from the oxygen container assy 06A-170.

(f) Remove the screws 06A-180, 06A-182, the washers 06A-190, 06A-192 and the oxygen container assy 06A-170 from the angles 06A-160.

(g) Remove the screws 06A-180, the washers 06A-190 and the angles 06A-160 from the aft side wall assembly 06A-010.

(h) Remove the caps 06A-230, the screws 06A-220, 06A-240, the washers 06A-190 and the post assembly 06A-210.

(i) Disassemble the post assembly 06A-210 as follows:

1 Remove the screws 06A-213.

(j) Remove the screws 06A-030 and the fittings 06A-020 from the brackets 06A-013.

(k) Remove the brackets 06A-013, 06A-017 from the aft side wall assembly 06A-010.

SUB TASK 25-41-51-010-021-K01
D2549020601600 R225401133-000

10. Removal of the Side Wall (06A-1)

NOTE: **See TABLE 3053 for the references for the replacement procedures of permanent installed parts.**

IPL FIG. ITEM	COMPONENT PART NAME	IPL FIG. ITEM	REPLACEMENT PART NAME	SEE REPAIR TASK
06A-001 06A-210	Side Wall Post Assembly	06A-215	Nut	Replacement of the Riveted Parts

Table 3053
Reference list for the replacement of permanent installed parts

(a) Remove and disassemble the handle assembly 06A-110 as follows:

1 Remove the security pins 06A-112 from the handle assembly 06A-110.

2 Remove the handle assembly 06A-110 from the aft side wall assembly 06A-010.

3 Remove the special screws 06A-111 and the special washers 06A-113 from the aft side wall assembly 06A-010.

(b) Remove the studs 06A-200 and the washers 06A-190 from the cover oxygen container assy 06A-120.

(c) Remove the screws 06A-140, the nuts 06A-150 and the cover oxygen container assy 06A-120 from the angle 06A-130.

(d) Remove the screws 06A-180, the washers 06A-190 and the angle 06A-130 from the aft side wall assembly 06A-010.

(e) Remove the ground cable from the oxygen container assy 06A-170.

(f) Remove the screws 06A-180, the washers 06A-190 and the oxygen container assy 06A-170 from the angles 06A-160.

(g) Remove the screws 06A-180, the washers 06A-190 and the angles 06A-160 from the aft side wall assembly 06A-010.

(h) Remove the caps 06A-230, the screws 06A-220, 06A-240, the washers 06A-190 and the post assembly 06A-210.

(i) Disassemble the post assembly 06A-210 as follows:

1 Remove the screws 06A-213.

(j) Remove the screws 06A-030 and the fittings 06A-020 from the brackets 06A-013.

(k) Remove the brackets 06A-013, 06A-017 from the aft side wall assembly 06A-010.

TASK 25-41-51-000-804-C01
D2549010502600 D2549010503800 D2549010506000 D2549010507200 D2549010507600 D2549010510200 D2549020501600 D2549020502400 D2549020502600 D2549020503000 D2549020503600 D2549020504400 D2549020504600 D2549020600000 D2549020604000 D2549030500600 D2549030500800 D2549030501400 D2549030502000 D2549030502800 D2549030503000 R225401107-004 R225401115-002 R225401188-004

22. Removal of the Side Wall

A. General

A complete disassembly of the component is not necessary and not recommended.

Do not disassemble the component more than it is necessary for:

- Cleaning
- Visual Inspection
- Replacement of defective parts.

B. Job Set-up Information
(1) Consumable Materials

REFERENCE	DESIGNATION
08-017A	Adhesive Structuralflexible

Table 3054
Consumable Materials

C. Procedure

WARNING: **BE CAREFUL WHEN YOU USE SOLVENTS/CLEANING AGENTS, SEALANTS AND OTHER MATERIALS. OBEY THE MATERIAL MANUFACTURER'S INSTRUCTIONS AND THE LOCAL REGULATIONS. MAKE SURE THAT THERE IS A GOOD FLOW OF AIR THROUGH THE WORK AREA. DO NOT BREATHE THE FUMES. DO NOT SMOKE. DO NOT USE THESE MATERIALS NEAR A FLAME, SPARKS OR SOURCES OF HEAT. USE PROTECTIVE CLOTHING, GOGGLES AND GLOVES. IF YOU GET ONE OF THESE MATERIALS ON YOUR SKIN OR IN YOUR EYES, FLUSH IT AWAY WITH A FLOW OF CLEAN WATER. IF YOU GET ONE OF THESE MATERIALS IN YOUR MOUTH, GET IMMEDIATE MEDICAL AID. IN GENERAL, THESE MATERIALS ARE POISONOUS, FLAMMABLE AND SKIN IRRITANTS.**

WARNING: **KEEP ALL HYDROCARBONS (FUELS, LUBRICANTS, ETC.) AWAY FROM ALL SOURCES OF OXYGEN. OXYGEN BECOMES EXPLOSIVE WHEN IT TOUCHES HYDROCARBONS.**

WARNING: **TO PREVENT CONTAMINATION OF THE OXYGEN SYSTEM, MAKE SURE THAT YOUR HANDS AND ALL THE TOOLS ARE CLEAN.**

CAUTION: **PUT DRY, CLEAN, METAL OR PLASTIC PLUGS ON ALL PIPES OR UNITS REMOVED TEMPORARILY. PUT EACH PIPE OR UNIT IN A SEALED VINYL BAG. UNWANTED MATERIALS IN THE OXYGEN SYSTEM CAN DAMAGE THE SYSTEM.**

CAUTION: **DO ALL THE WORK ON A CLEAN, SOFT SURFACE TO PREVENT DAMAGE TO THE COMPONENTS.**

SUB TASK 25-41-51-010-022-A01
D2549020504400 R225401115-002

1. Removal of the Side Wall (06B-1)

NOTE: **See TABLE 3055 for the references for the replacement procedures of permanent installed parts.**

IPL FIG. ITEM	COMPONENT PART NAME	IPL FIG. ITEM	REPLACEMENT PART NAME	SEE REPAIR TASK
06B-001 06B-210	Side Wall Post Assembly	06B-215	Nut	Replacement of the Riveted Parts

Table 3055
Reference list for the replacement of permanent installed parts

(a) Remove and disassemble the handle assembly 06B-110 as follows:

1 Remove the security pins 06B-112 from the handle assembly 06B-110.

2 Remove the handle assembly 06B-110 from the aft side wall assembly 06B-010.

3 Remove the special screws 06B-111 and the special washers 06B-113 from the aft side wall assembly 06B-010.

(b) Remove the screws 06B-280, the washers 06B-290 and the support 06B-270 from the aft side wall assembly 06B-010.

(c) Remove the studs 06B-200 and the washers 06B-190 from the cover oxygen container assy 06B-120.

(d) Remove the screws 06B-140, the nuts 06B-150 and the cover oxygen container assy 06B-120 from the angle 06B-130.

(e) Remove the screws 06B-180, the washers 06B-190 and the angle 06B-130 from the aft side wall assembly 06B-010.

(f) Remove the ground cable from the oxygen container assy 06B-170.

(g) Remove the screws 06B-180, 06B-185, the washers 06B-190, 06B-195 and the oxygen container assy 06B-170 from the angles 06B-160.

(h) Remove the screws 06B-180, the washers 06B-190 and the angles 06B-160 from the aft side wall assembly 06B-010.

(i) Remove the caps 06B-230, the screws 06B-220, 06B-240, the washers 06B-190 and the post assembly 06B-210.

(j) Disassemble the post assembly 06B-210 as follows:

1 Remove the screws 06B-213.

(k) Remove the screws 06B-030 and the fittings 06B-020 from the brackets 06B-013.

(l) Remove the brackets 06B-013, 06B-017 from the aft side wall assembly 06B-010.

SUB TASK 25-41-51-010-022-B01
D2549020503000

2. Removal of the Side Wall (06B-1)

NOTE: **See TABLE 3056 for the references for the replacement procedures of permanent installed parts.**

IPL FIG. ITEM	COMPONENT PART NAME	IPL FIG. ITEM	REPLACEMENT PART NAME	SEE REPAIR TASK
06B-001 06B-210	Side Wall Post Assembly	06B-215	Nut	Replacement of the Riveted Parts

Table 3056
Reference list for the replacement of permanent installed parts

(a) Remove and disassemble the handle assembly 06B-110 as follows:

1 Remove the security pins 06B-112 from the handle assembly 06B-110.

2 Remove the handle assembly 06B-110 from the aft side wall assembly 06B-010.

3 Remove the special screws 06B-111 and the special washers 06B-113 from the aft side wall assembly 06B-010.

(b) Remove the screws 06B-280, the washers 06B-290 and the support 06B-270 from the aft side wall assembly 06B-010.

(c) Remove the studs 06B-200 and the washers 06B-190 from the cover oxygen container assy 06B-120.

(d) Remove the screws 06B-140, the nuts 06B-150 and the cover oxygen container assy 06B-120 from the angle 06B-130.

(e) Remove the screws 06B-180, the washers 06B-190 and the angle 06B-130 from the aft side wall assembly 06B-010.

(f) Remove the ground cable from the oxygen container assy 06B-170.

(g) Remove the screws 06B-180, the washers 06B-190 and the oxygen container assy 06B-170 from the angles 06B-160.

(h) Remove the screws 06B-180, the washers 06B-190 and the angles 06B-160 from the aft side wall assembly 06B-010.

(i) Remove the screws 06B-440, 06B-460, the washers 06B-430 and the angle 06B-420 from the aft side wall assembly 06B-010.

(j) Remove the caps 06B-230, the screws 06B-220, 06B-240, the washers 06B-190 and the post assembly 06B-210.

(k) Disassemble the post assembly 06B-210 as follows:

1 Remove the screws 06B-213.

(l) Remove the screws 06B-030 and the fittings 06B-020 from the brackets 06B-013.

(m) Remove the brackets 06B-013, 06B-017 from the aft side wall assembly 06B-010.

SUB TASK 25-41-51-010-022-C01
D2549030502800

3. Removal of the Side Wall (06B-1)

NOTE: **See TABLE 3057 for the references for the replacement procedures of permanent installed parts.**

IPL FIG. ITEM	COMPONENT PART NAME	IPL FIG. ITEM	REPLACEMENT PART NAME	SEE REPAIR TASK
06B-001 06B-210	Side Wall Post Assembly	06B-215	Nut	Replacement of the Riveted Parts

Table 3057
Reference list for the replacement of permanent installed parts

(a) Remove and disassemble the handle assembly 06B-110 as follows:

1 Remove the security pins 06B-112 from the handle assembly 06B-110.

2 Remove the handle assembly 06B-110 from the aft side wall assembly 06B-010.

3 Remove the special screws 06B-111 and the special washers 06B-113 from the aft side wall assembly 06B-010.

(b) Remove the toilet seat cover dispenser 06B-250 from the screws 06B-260.

(c) Remove the screws 06B-260 from the aft side wall assembly 06B-010.

(d) Remove the studs 06B-200 and the washers 06B-190 from the cover oxygen container assy 06B-120.

(e) Remove the screws 06B-140, the nuts 06B-150 and the cover oxygen container assy 06B-120 from the angle 06B-130.

(f) Remove the screws 06B-180, the washers 06B-190 and the angle 06B-130 from the aft side wall assembly 06B-010.

(g) Remove the ground cable from the oxygen container assy 06B-170.

(h) Remove the screws 06B-180, the washers 06B-190 and the oxygen container assy 06B-170 from the angles 06B-160.

(i) Remove the screws 06B-180, the washers 06B-190 and the angles 06B-160 from the aft side wall assembly 06B-010.

(j) Remove the screws 06B-440, 06B-460, the washers 06B-430 and the angle 06B-420 from the aft side wall assembly 06B-010.

(k) Remove the caps 06B-230, the screws 06B-220, 06B-240, the washers 06B-190 and the post assembly 06B-210.

(l) Disassemble the post assembly 06B-210 as follows:

1 Remove the screws 06B-213.

(m) Remove the screws 06B-030 and the fittings 06B-020 from the brackets 06B-013.

(n) Remove the brackets 06B-013, 06B-017 from the aft side wall assembly 06B-010.

SUB TASK 25-41-51-010-022-D01
D2549020501600

4. Removal of the Side Wall (06B-1)

NOTE: **See TABLE 3058 for the references for the replacement procedures of permanent installed parts.**

IPL FIG. ITEM	COMPONENT PART NAME	IPL FIG. ITEM	REPLACEMENT PART NAME	SEE REPAIR TASK
06B-001 06B-210	Side Wall Post Assembly	06B-215	Nut	Replacement of the Riveted Parts

Table 3058
Reference list for the replacement of permanent installed parts

(a) Remove and disassemble the handle assembly 06B-110 as follows:

1 Remove the security pins 06B-112 from the handle assembly 06B-110.

2 Remove the handle assembly 06B-110 from the aft side wall assembly 06B-010.

3 Remove the special screws 06B-111 and the special washers 06B-113 from the aft side wall assembly 06B-010.

(b) Remove the toilet seat cover dispenser 06B-250 from the screws 06B-260.

(c) Remove the screws 06B-260 from the aft side wall assembly 06B-010.

(d) Remove the studs 06B-200 and the washers 06B-190 from the cover oxygen container assy 06B-120.

(e) Remove the screws 06B-140, the nuts 06B-150 and the cover oxygen container assy 06B-120 from the angle 06B-130.

(f) Remove the screws 06B-180, the washers 06B-190 and the angle 06B-130 from the aft side wall assembly 06B-010.

(g) Remove the ground cable from the oxygen container assy 06B-170.

(h) Remove the screws 06B-180, the washers 06B-190 and the oxygen container assy 06B-170 from the angles 06B-160.

(i) Remove the screws 06B-180, the washers 06B-190 and the angles 06B-160 from the aft side wall assembly 06B-010.

(j) Remove the screws 06B-440, 06B-460, the washers 06B-430 and the angle 06B-420 from the aft side wall assembly 06B-010.

(k) Remove the caps 06B-230, the screws 06B-220, 06B-240, the washers 06B-190 and the post assembly 06B-210.

(l) Disassemble the post assembly 06B-210 as follows:

1 Remove the screws 06B-213.

(m) Remove the screws 06B-030 and the fittings 06B-020 from the brackets 06B-013.

(n) Remove the brackets 06B-013, 06B-017 from the aft side wall assembly 06B-010.

SUB TASK 25-41-51-010-022-E01
D2549030500800 R225401188-004

5. Removal of the Side Wall (06B-1)

NOTE: **See TABLE 3059 for the references for the replacement procedures of permanent installed parts.**

IPL FIG. ITEM	COMPONENT PART NAME	IPL FIG. ITEM	REPLACEMENT PART NAME	SEE REPAIR TASK
06B-001 06B-210	Side Wall Post Assembly	06B-215	Nut	Replacement of the Riveted Parts

Table 3059
Reference list for the replacement of permanent installed parts

(a) Remove and disassemble the handle assembly 06B-110 as follows:

1 Remove the security pins 06B-112 from the handle assembly 06B-110.

2 Remove the handle assembly 06B-110 from the aft side wall assembly 06B-010.

3 Remove the special screws 06B-111 and the special washers 06B-113 from the aft side wall assembly 06B-010.

(b) Remove the toilet seat cover dispenser 06B-250 from the screws 06B-260.

(c) Remove the screws 06B-260 from the aft side wall assembly 06B-010.

(d) Remove the studs 06B-200 and the washers 06B-190 from the cover oxygen container assy 06B-120.

(e) Remove the screws 06B-140, the nuts 06B-150 and the cover oxygen container assy 06B-120 from the angle 06B-130.

(f) Remove the screws 06B-180, the washers 06B-190 and the angle 06B-130 from the aft side wall assembly 06B-010.

(g) Remove the ground cable from the oxygen container assy 06B-170.

(h) Remove the screws 06B-180, 06B-185, the washers 06B-190, 06B-195, and the oxygen container assy 06B-170 from the angles 06B-160.

(i) Remove the screws 06B-180, the washers 06B-190 and the angles 06B-160 from the aft side wall assembly 06B-010.

(j) Remove the caps 06B-230, the screws 06B-220, 06B-240, the washers 06B-190 and the post assembly 06B-210.

(k) Disassemble the post assembly 06B-210 as follows:

1 Remove the screws 06B-213.

(l) Remove the screws 06B-030 and the fittings 06B-020 from the brackets 06B-013.

(m) Remove the brackets 06B-013, 06B-017 from the aft side wall assembly 06B-010.

SUB TASK 25-41-51-010-022-F01
D2549030502000

6. Removal of the Side Wall (06B-1)

NOTE: **See TABLE 3060 for the references for the replacement procedures of permanent installed parts.**

IPL FIG. ITEM	COMPONENT PART NAME	IPL FIG. ITEM	REPLACEMENT PART NAME	SEE REPAIR TASK
06B-001 06B-210	Side Wall Post Assembly	06B-215	Nut	Replacement of the Riveted Parts

Table 3060
Reference list for the replacement of permanent installed parts

(a) Remove and disassemble the handle assembly 06B-110 as follows:

1 Remove the security pins 06B-112 from the handle assembly 06B-110.

2 Remove the handle assembly 06B-110 from the aft side wall assembly 06B-010.

3 Remove the special screws 06B-111 and the special washers 06B-113 from the aft side wall assembly 06B-010.

(b) Remove the toilet seat cover dispenser 06B-250 from the screws 06B-260.

(c) Remove the screws 06B-260 from the aft side wall assembly 06B-010.

(d) Remove the studs 06B-200 and the washers 06B-190 from the cover oxygen container assy 06B-120.

(e) Remove the screws 06B-140, the nuts 06B-150 and the cover oxygen container assy 06B-120 from the angle 06B-130.

(f) Remove the screws 06B-180, the washers 06B-190 and the angle 06B-130 from the aft side wall assembly 06B-010.

(g) Remove the ground cable from the oxygen container assy 06B-170.

(h) Remove the screws 06B-180, the washers 06B-190 and the oxygen container assy 06B-170 from the angles 06B-160.

(i) Remove the screws 06B-180, the washers 06B-190 and the angles 06B-160 from the aft side wall assembly 06B-010.

(j) Remove the caps 06B-230, the screws 06B-220, 06B-240, the washers 06B-190 and the post assembly 06B-210.

(k) Disassemble the post assembly 06B-210 as follows:

1 Remove the screws 06B-213.

(l) Remove the screws 06B-030 and the fittings 06B-020 from the brackets 06B-013.

(m) Remove the brackets 06B-013, 06B-017 from the aft side wall assembly 06B-010.

SUB TASK 25-41-51-010-022-G01
D2549020604000

7. Removal of the Side Wall (06B-1)

NOTE: **See TABLE 3061 for the references for the replacement procedures of permanent installed parts.**

IPL FIG. ITEM	COMPONENT PART NAME	IPL FIG. ITEM	REPLACEMENT PART NAME	SEE REPAIR TASK
06B-001 06B-210	Side Wall Post Assembly	06B-215	Nut	Replacement of the Riveted Parts

Table 3061
Reference list for the replacement of permanent installed parts

(a) Remove and disassemble the handle assembly 06B-110 as follows:

1 Remove the security pins 06B-112 from the handle assembly 06B-110.

2 Remove the handle assembly 06B-110 from the aft side wall assembly 06B-010.

3 Remove the special screws 06B-111 and the special washers 06B-113 from the aft side wall assembly 06B-010.

(b) Remove the toilet seat cover dispenser 06B-250 from the screws 06B-260.

(c) Remove the screws 06B-260 from the aft side wall assembly 06B-010.

(d) Remove the studs 06B-200 and the washers 06B-190 from the cover oxygen container assy 06B-120.

(e) Remove the screws 06B-140, the nuts 06B-150 and the cover oxygen container assy 06B-120 from the angle 06B-130.

(f) Remove the screws 06B-180, the washers 06B-190 and the angle 06B-130 from the aft side wall assembly 06B-010.

(g) Remove the ground cable from the oxygen container assy 06B-170.

(h) Remove the screws 06B-180, the washers 06B-190 and the oxygen container assy 06B-170 from the angles 06B-160.

(i) Remove the screws 06B-180, the washers 06B-190 and the angles 06B-160 from the aft side wall assembly 06B-010.

(j) Remove the caps 06B-230, the screws 06B-220, 06B-240, the washers 06B-190 and the post assembly 06B-210.

(k) Disassemble the post assembly 06B-210 as follows:

1 Remove the screws 06B-213.

(l) Remove the screws 06B-030 and the fittings 06B-020 from the brackets 06B-013.

(m) Remove the brackets 06B-013, 06B-017 from the aft side wall assembly 06B-010.

SUB TASK 25-41-51-010-022-H01
D2549020600000

8. Removal of the Side Wall (06B-1)

NOTE: **See TABLE 3062 for the references for the replacement procedures of permanent installed parts.**

More data for bonded parts are given in column SEE REPAIR TASK. Use the data for the selection of the related repair solution.

IPL FIG. ITEM	COMPONENT PART NAME	IPL FIG. ITEM	REPLACEMENT PART NAME	SEE REPAIR TASK
06B-001 06B-210	Side Wall Post Assembly	06B-215	Nut	Replacement of the Riveted Parts
06B-001	Side Wall	06B-310	Reinforcing Strip	Replacement of the Bonded Parts Material No. 08-017A Adhesive Structuralflexible

Table 3062
Reference list for the replacement of permanent installed parts

(a) Remove and disassemble the handle assembly 06B-110 as follows:

1 Remove the security pins 06B-112 from the handle assembly 06B-110.

2 Remove the handle assembly 06B-110 from the aft side wall assembly 06B-010.

3 Remove the special screws 06B-111 and the special washers 06B-113 from the aft side wall assembly 06B-010.

(b) Remove the toilet seat cover dispenser 06B-250 from the screws 06B-260.

(c) Remove the screws 06B-260 from the aft side wall assembly 06B-010.

(d) Remove the studs 06B-200 and the washers 06B-190 from the cover oxygen container assy 06B-120.

(e) Remove the screws 06B-140, the nuts 06B-150 and the cover oxygen container assy 06B-120 from the angle 06B-130.

(f) Remove the screws 06B-180, the washers 06B-190 and the angle 06B-130 from the aft side wall assembly 06B-010.

(g) Remove the ground cable from the oxygen container assy 06B-170.

(h) Remove the screws 06B-180, the washers 06B-190 and the oxygen container assy 06B-170 from the angles 06B-160.

(i) Remove the screws 06B-180, the washers 06B-190 and the angles 06B-160 from the aft side wall assembly 06B-010.

(j) Remove the caps 06B-230, the screws 06B-220, 06B-240, the washers 06B-190 and the post assembly 06B-210.

(k) Disassemble the post assembly 06B-210 as follows:

1 Remove the screws 06B-213.

(l) Remove the screws 06B-030 and the fittings 06B-020 from the brackets 06B-013.

(m) Remove the brackets 06B-013, 06B-017 from the aft side wall assembly 06B-010.

SUB TASK 25-41-51-010-022-J01
D2549010510200 R225401107-004

9. Removal of the Side Wall (06B-1)

NOTE: **See TABLE 3063 for the references for the replacement procedures of permanent installed parts.**

More data for bonded parts are given in column SEE REPAIR TASK. Use the data for the selection of the related repair solution.

IPL FIG. ITEM	COMPONENT PART NAME	IPL FIG. ITEM	REPLACEMENT PART NAME	SEE REPAIR TASK
06B-001 06B-210	Side Wall Post Assembly	06B-215	Nut	Replacement of the Riveted Parts
06B-001	Side Wall	06B-310	Reinforcing Strip	Replacement of the Bonded Parts Material No. 08-017A Adhesive Structuralflexible

Table 3063
Reference list for the replacement of permanent installed parts

(a) Remove and disassemble the handle assembly 06B-110 as follows:

1 Remove the security pins 06B-112 from the handle assembly 06B-110.

2 Remove the handle assembly 06B-110 from the aft side wall assembly 06B-010.

3 Remove the special screws 06B-111 and the special washers 06B-113 from the aft side wall assembly 06B-010.

(b) Remove the screws 06B-140, the nuts 06B-150 and the angle 06B-130 from the lavatory structure.

(c) Remove the screws 06B-180, the washers 06B-190 and the angle 06B-130 from the aft side wall assembly 06B-010.

(d) Remove the ground cable from the oxygen container assy 06B-170.

(e) Remove the screws 06B-180, 06B-185, the washers 06B-190, 06B-195, and the oxygen container assy 06B-170 from the angles 06B-160.

(f) Remove the screws 06B-180, the washers 06B-190 and the angles 06B-160 from the aft side wall assembly 06B-010.

(g) Remove the caps 06B-230, the screws 06B-220, 06B-240, the washers 06B-190 and the post assembly 06B-210.

(h) Disassemble the post assembly 06B-210 as follows:

1 Remove the screws 06B-213.

(i) Remove the screws 06B-030 and the fittings 06B-020 from the brackets 06B-013.

(j) Remove the brackets 06B-013, 06B-017 from the aft side wall assembly 06B-010.

SUB TASK 25-41-51-010-022-K01
D2549020502400 D2549020502600 D2549020503600 D2549020504600

10. Removal of the Side Wall (06B-1)

NOTE: **See TABLE 3064 for the references for the replacement procedures of permanent installed parts.**

IPL FIG. ITEM	COMPONENT PART NAME	IPL FIG. ITEM	REPLACEMENT PART NAME	SEE REPAIR TASK
06B-001 06B-210	Side Wall Post Assembly	06B-215	Nut	Replacement of the Riveted Parts

Table 3064
Reference list for the replacement of permanent installed parts

(a) Remove and disassemble the handle assembly 06B-110 as follows:

1 Remove the security pins 06B-112 from the handle assembly 06B-110.

2 Remove the handle assembly 06B-110 from the aft side wall assembly 06B-010.

3 Remove the special screws 06B-111 and the special washers 06B-113 from the aft side wall assembly 06B-010.

(b) Remove the studs 06B-200 and the washers 06B-190 from the cover oxygen container assy 06B-120.

(c) Remove the screws 06B-140, the nuts 06B-150 and the cover oxygen container assy 06B-120 from the angle 06B-130.

(d) Remove the screws 06B-180, the washers 06B-190 and the angle 06B-130 from the aft side wall assembly 06B-010.

(e) Remove the ground cable from the oxygen container assy 06B-170.

(f) Remove the screws 06B-180, the washers 06B-190 and the oxygen container assy 06B-170 from the angles 06B-160.

(g) Remove the screws 06B-180, the washers 06B-190 and the angles 06B-160 from the aft side wall assembly 06B-010.

(h) Remove the caps 06B-230, the screws 06B-220, 06B-240, the washers 06B-190 and the post assembly 06B-210.

(i) Disassemble the post assembly 06B-210 as follows:

1 Remove the screws 06B-213.

(j) Remove the screws 06B-030 and the fittings 06B-020 from the brackets 06B-013.

(k) Remove the brackets 06B-013, 06B-017 from the aft side wall assembly 06B-010.

SUB TASK 25-41-51-010-022-L01
D2549010507200

11. Removal of the Side Wall (06B-1)

NOTE: **See TABLE 3065 for the references for the replacement procedures of permanent installed parts.**

IPL FIG. ITEM	COMPONENT PART NAME	IPL FIG. ITEM	REPLACEMENT PART NAME	SEE REPAIR TASK
06B-001 06B-210	Side Wall Post Assembly	06B-215	Nut	Replacement of the Riveted Parts

Table 3065
Reference list for the replacement of permanent installed parts

(a) Remove and disassemble the handle assembly 06B-110 as follows:

1 Remove the security pins 06B-112 from the handle assembly 06B-110.

2 Remove the handle assembly 06B-110 from the aft side wall assembly 06B-010.

3 Remove the special screws 06B-111 and the special washers 06B-113 from the aft side wall assembly 06B-010.

(b) Remove the studs 06B-200 and the washers 06B-190 from the cover oxygen container assy 06B-120.

(c) Remove the screws 06B-140, the nuts 06B-150 and the cover oxygen container assy 06B-120 from the angle 06B-130.

(d) Remove the screws 06B-180, the washers 06B-190 and the angle 06B-130 from the aft side wall assembly 06B-010.

(e) Remove the ground cable from the oxygen container assy 06B-170.

(f) Remove the screws 06B-180, the washers 06B-190 and the oxygen container assy 06B-170 from the angles 06B-160.

(g) Remove the screws 06B-180, the washers 06B-190 and the angles 06B-160 from the aft side wall assembly 06B-010.

(h) Remove the caps 06B-230, the screws 06B-220, 06B-240, the washers 06B-190 and the post assembly 06B-210.

(i) Disassemble the post assembly 06B-210 as follows:

1 Remove the screws 06B-213.

(j) Remove the screws 06B-030 and the fittings 06B-020 from the brackets 06B-013.

(k) Remove the brackets 06B-013, 06B-017 from the aft side wall assembly 06B-010.

SUB TASK 25-41-51-010-022-M01
D2549010502600 D2549010503800 D2549010506000 D2549010507600
D2549030500600 D2549030501400 D2549030503000

12. Removal of the Side Wall (06B-1)

NOTE: **See TABLE 3066 for the references for the replacement procedures of permanent installed parts.**

IPL FIG. ITEM	COMPONENT PART NAME	IPL FIG. ITEM	REPLACEMENT PART NAME	SEE REPAIR TASK
06B-001 06B-210	Side Wall Post Assembly	06B-215	Nut	Replacement of the Riveted Parts

Table 3066
Reference list for the replacement of permanent installed parts

(a) Remove and disassemble the handle assembly 06B-110 as follows:

1 Remove the security pins 06B-112 from the handle assembly 06B-110.

2 Remove the handle assembly 06B-110 from the aft side wall assembly 06B-010.

3 Remove the special screws 06B-111 and the special washers 06B-113 from the aft side wall assembly 06B-010.

(b) Remove the studs 06B-200 and the washers 06B-190 from the cover oxygen container assy 06B-120.

(c) Remove the screws 06B-140, the nuts 06B-150 and the cover oxygen container assy 06B-120 from the angle 06B-130.

(d) Remove the screws 06B-180, the washers 06B-190 and the angle 06B-130 from the aft side wall assembly 06B-010.

(e) Remove the ground cable from the oxygen container assy 06B-170.

(f) Remove the screws 06B-180, the washers 06B-190 and the oxygen container assy 06B-170 from the angles 06B-160.

(g) Remove the screws 06B-180, the washers 06B-190 and the angles 06B-160 from the aft side wall assembly 06B-010.

(h) Remove the caps 06B-230, the screws 06B-220, 06B-240, the washers 06B-190 and the post assembly 06B-210.

(i) Disassemble the post assembly 06B-210 as follows:

1 Remove the screws 06B-213.

(j) Remove the screws 06B-030 and the fittings 06B-020 from the brackets 06B-013.

(k) Remove the brackets 06B-013, 06B-017 from the aft side wall assembly 06B-010.

TASK 25-41-51-000-804-D01
D2549010505200 D2549010505600 D2549010507800 D2549010508800 D2549020504000 D2549020504200 D2549020600400 D2549020600800 D2549020603000 D2549030501000 D2549030501800 D2549030502400 D2549030502600 D2549030505400 R225401128-000 R225401188-006

23. Removal of the Side Wall

A. General

A complete disassembly of the component is not necessary and not recommended.

Do not disassemble the component more than it is necessary for:

- Cleaning
- Visual Inspection
- Replacement of defective parts.

B. Job Set-up Information
(1) Consumable Materials

REFERENCE	DESIGNATION
08-007	Sealant, High Temperature

Table 3067
Consumable Materials

(2) Fixtures, Tools, Test and Support Equipment

REFERENCE	DESIGNATION
	hot air blower

Table 3068
Fixtures, Tools, Test and Support Equipment

C. Procedure

WARNING: **BE CAREFUL WHEN YOU USE SOLVENTS/CLEANING AGENTS, SEALANTS AND OTHER MATERIALS. OBEY THE MATERIAL MANUFACTURER'S INSTRUCTIONS AND THE LOCAL REGULATIONS. MAKE SURE THAT THERE IS A GOOD FLOW OF AIR THROUGH THE WORK AREA. DO NOT BREATHE THE FUMES. DO NOT SMOKE. DO NOT USE THESE MATERIALS NEAR A FLAME, SPARKS OR SOURCES OF HEAT. USE PROTECTIVE CLOTHING, GOGGLES AND GLOVES. IF YOU GET ONE OF THESE MATERIALS ON YOUR SKIN OR IN YOUR EYES, FLUSH IT AWAY WITH A FLOW OF CLEAN WATER. IF YOU GET ONE OF THESE MATERIALS IN YOUR MOUTH, GET IMMEDIATE MEDICAL AID. IN GENERAL, THESE MATERIALS ARE POISONOUS, FLAMMABLE AND SKIN IRRITANTS.**

WARNING: **KEEP ALL HYDROCARBONS (FUELS, LUBRICANTS, ETC.) AWAY FROM ALL SOURCES OF OXYGEN. OXYGEN BECOMES EXPLOSIVE WHEN IT TOUCHES HYDROCARBONS.**

WARNING: **TO PREVENT CONTAMINATION OF THE OXYGEN SYSTEM, MAKE SURE THAT YOUR HANDS AND ALL THE TOOLS ARE CLEAN.**

CAUTION: **PUT DRY, CLEAN, METAL OR PLASTIC PLUGS ON ALL PIPES OR UNITS REMOVED TEMPORARILY. PUT EACH PIPE OR UNIT IN A SEALED VINYL BAG. UNWANTED MATERIALS IN THE OXYGEN SYSTEM CAN DAMAGE THE SYSTEM.**

CAUTION: **DO ALL THE WORK ON A CLEAN, SOFT SURFACE TO PREVENT DAMAGE TO THE COMPONENTS.**

SUB TASK 25-41-51-010-023-A01
D2549020603000

1. Removal of the Side Wall (06C-1)

NOTE: **See TABLE 3069 for the references for the replacement procedures of permanent installed parts.**

IPL FIG. ITEM	COMPONENT PART NAME	IPL FIG. ITEM	REPLACEMENT PART NAME	SEE REPAIR TASK
06C-001 06C-240	Side Wall Post Assembly	06C-245	Nut	Replacement of the Riveted Parts

Table 3069
Reference list for the replacement of permanent installed parts

(a) Remove and disassemble the handle assembly 06C-110 as follows:

1 Remove the security pins 06C-130 from the handle assembly 06C-110.

2 Remove the handle assembly 06C-110 from the aft side wall assembly 06C-010.

3 Remove the special screws 06C-120 and the special washers 06C-140 from the aft side wall assembly 06C-010.

(b) Remove the screws 06C-310, the washers 06C-320 and the support 06C-300 from the aft side wall assembly 06C-010.

(c) Remove the studs 06C-230 and the washers 06C-220 from the cover oxygen container assy 06C-150.

(d) Remove the screws 06C-170, the nuts 06C-180 and the cover oxygen container assy 06C-150 from the angle 06C-160.

(e) Remove the screws 06C-210, the washers 06C-220 and the angle 06C-160 from the aft side wall assembly 06C-010.

(f) Remove the ground cable from the oxygen container assy 06C-200.

(g) Remove the screws 06C-210, the washers 06C-220 and the oxygen container assy 06C-200 from the angles 06C-190.

(h) Remove the screws 06C-210, the washers 06C-220 and the angles 06C-190 from the aft side wall assembly 06C-010.

(i) Remove the screws 06C-420, the nuts 06C-430, the plates 06C-410 and the single door emergency unlocking device assembly 06C-340 from the post assembly 06C-240.

(j) Disassemble the single door emergency unlocking device assembly 06C-340 as follows:

WARNING: BE CAREFUL WHEN YOU USE MATERIAL NO. 08-007 SEALANT, HIGH TEMPERATURE. OBEY THE MATERIAL MANUFACTURER'S INSTRUCTIONS.

1 Remove the bolt 06C-400 and the emergency unlocking-device strike 06C-360 from the emergency unlocking-device housing 06C-350.

NOTE: If necessary use a hot air blower to heat up the Material No. 08-007 Sealant, High Temperature to remove the bolt 06C-400.

WARNING: **BE CAREFUL WHEN YOU USE MATERIAL NO. 08-007 SEALANT, HIGH TEMPERATURE. OBEY THE MATERIAL MANUFACTURER'S INSTRUCTIONS.**

2 Remove the pin 06C-380, the snap catch 06C-390 and the emergency unlocking-device pivot 06C-370 from the emergency unlocking-device housing 06C-350.

NOTE: **If necessary use a hot air blower to heat up the Material No. 08-007 Sealant, High Temperature to remove the snap catch 06C-390 and the pin 06C-380.**

(k) Remove the caps 06C-260, the screws 06C-250, 06C-270, the washers 06C-220 and the post assembly 06C-240.

(l) Disassemble the post assembly 06C-240 as follows:

1 Remove the screws 06C-243.

(m) Remove the screws 06C-030 and the fittings 06C-020 from the brackets 06C-013.

(n) Remove the brackets 06C-013, 06C-017 from the aft side wall assembly 06C-010.

SUB TASK 25-41-51-010-023-B01
D2549020600400 R225401128-000

2. Removal of the Side Wall (06C-1)

NOTE: **See TABLE 3070 for the references for the replacement procedures of permanent installed parts.**

IPL FIG. ITEM	COMPONENT PART NAME	IPL FIG. ITEM	REPLACEMENT PART NAME	SEE REPAIR TASK
06C-001 06C-240	Side Wall Post Assembly	06C-245	Nut	Replacement of the Riveted Parts

Table 3070
Reference list for the replacement of permanent installed parts

(a) Remove and disassemble the handle assembly 06C-110 as follows:

1 Remove the security pins 06C-130 from the handle assembly 06C-110.

2 Remove the handle assembly 06C-110 from the aft side wall assembly 06C-010.

3 Remove the special screws 06C-120 and the special washers 06C-140 from the aft side wall assembly 06C-010.

(b) Remove the screws 06C-310, the washers 06C-320 and the support 06C-300 from the aft side wall assembly 06C-010.

(c) Remove the toilet seat cover dispenser 06C-280 from the screws 06C-290.

(d) Remove the screws 06C-290 from the aft side wall assembly 06C-010.

(e) Remove the studs 06C-230 and the washers 06C-220 from the cover oxygen container assy 06C-150.

(f) Remove the screws 06C-170, the nuts 06C-180 and the cover oxygen container assy 06C-150 from the angle 06C-160.

(g) Remove the screws 06C-210, the washers 06C-220 and the angle 06C-160 from the aft side wall assembly 06C-010.

(h) Remove the ground cable from the oxygen container assy 06C-200.

(i) Remove the screws 06C-210, 06C-212, the washers 06C-220 and the oxygen container assy 06C-200 from the angles 06C-190.

(j) Remove the screws 06C-210, the washers 06C-220 and the angles 06C-190 from the aft side wall assembly 06C-010.

(k) Remove the caps 06C-260, the screws 06C-250, 06C-270, the washers 06C-220 and the post assembly 06C-240.

(l) Disassemble the post assembly 06C-240 as follows:

1 Remove the screws 06C-243.

(m) Remove the screws 06C-030 and the fittings 06C-020 from the brackets 06C-013.

(n) Remove the brackets 06C-013, 06C-017 from the aft side wall assembly 06C-010.

SUB TASK 25-41-51-010-023-C01
D2549020504000 D2549030501800

3. Removal of the Side Wall (06C-1)

NOTE: **See TABLE 3071 for the references for the replacement procedures of permanent installed parts.**

IPL FIG. ITEM	COMPONENT PART NAME	IPL FIG. ITEM	REPLACEMENT PART NAME	SEE REPAIR TASK
06C-001 06C-240	Side Wall Post Assembly	06C-245	Nut	Replacement of the Riveted Parts

Table 3071
Reference list for the replacement of permanent installed parts

(a) Remove and disassemble the handle assembly 06C-110 as follows:

1 Remove the security pins 06C-130 from the handle assembly 06C-110.

2 Remove the handle assembly 06C-110 from the aft side wall assembly 06C-010.

3 Remove the special screws 06C-120 and the special washers 06C-140 from the aft side wall assembly 06C-010.

(b) Remove the toilet seat cover dispenser 06C-280 from the screws 06C-290.

(c) Remove the screws 06C-290 from the aft side wall assembly 06C-010.

(d) Remove the studs 06C-230 and the washers 06C-220 from the cover oxygen container assy 06C-150.

(e) Remove the screws 06C-170, the nuts 06C-180 and the cover oxygen container assy 06C-150 from the angle 06C-160.

(f) Remove the screws 06C-210, the washers 06C-220 and the angle 06C-160 from the aft side wall assembly 06C-010.

(g) Remove the ground cable from the oxygen container assy 06C-200.

(h) Remove the screws 06C-210, the washers 06C-220 and the oxygen container assy 06C-200 from the angles 06C-190.

(i) Remove the screws 06C-210, the washers 06C-220 and the angles 06C-190 from the aft side wall assembly 06C-010.

(j) Remove the caps 06C-260, the screws 06C-250, 06C-270, the washers 06C-220 and the post assembly 06C-240.

(k) Disassemble the post assembly 06C-240 as follows:

1 Remove the screws 06C-243.

(l) Remove the screws 06C-030 and the fittings 06C-020 from the brackets 06C-013.

(m) Remove the brackets 06C-013, 06C-017 from the aft side wall assembly 06C-010.

SUB TASK 25-41-51-010-023-D01
D2549010505200 D2549010505600 D2549010507800 D2549020504200

4. Removal of the Side Wall (06C-1)

NOTE: **See TABLE 3072 for the references for the replacement procedures of permanent installed parts.**

IPL FIG. ITEM	COMPONENT PART NAME	IPL FIG. ITEM	REPLACEMENT PART NAME	SEE REPAIR TASK
06C-001 06C-240	Side Wall Post Assembly	06C-245	Nut	Replacement of the Riveted Parts

Table 3072
Reference list for the replacement of permanent installed parts

(a) Remove and disassemble the handle assembly 06C-110 as follows:

1 Remove the security pins 06C-130 from the handle assembly 06C-110.

2 Remove the handle assembly 06C-110 from the aft side wall assembly 06C-010.

3 Remove the special screws 06C-120 and the special washers 06C-140 from the aft side wall assembly 06C-010.

(b) Remove the toilet seat cover dispenser 06C-280 from the screws 06C-290.

(c) Remove the screws 06C-290 from the aft side wall assembly 06C-010.

(d) Remove the studs 06C-230 and the washers 06C-220 from the cover oxygen container assy 06C-150.

(e) Remove the screws 06C-170, the nuts 06C-180 and the cover oxygen container assy 06C-150 from the angle 06C-160.

(f) Remove the screws 06C-210, the washers 06C-220 and the angle 06C-160 from the aft side wall assembly 06C-010.

(g) Remove the ground cable from the oxygen container assy 06C-200.

(h) Remove the screws 06C-210, the washers 06C-220 and the oxygen container assy 06C-200 from the angles 06C-190.

(i) Remove the screws 06C-210, the washers 06C-220 and the angles 06C-190 from the aft side wall assembly 06C-010.

(j) Remove the caps 06C-260, the screws 06C-250, 06C-270, the washers 06C-220 and the post assembly 06C-240.

(k) Disassemble the post assembly 06C-240 as follows:

1 Remove the screws 06C-243.

(l) Remove the screws 06C-030 and the fittings 06C-020 from the brackets 06C-013.

(m) Remove the brackets 06C-013, 06C-017 from the aft side wall assembly 06C-010.

SUB TASK 25-41-51-010-023-E01
D2549020600800

5. Removal of the Side Wall (06C-1)

NOTE: **See TABLE 3073 for the references for the replacement procedures of permanent installed parts.**

IPL FIG. ITEM	COMPONENT PART NAME	IPL FIG. ITEM	REPLACEMENT PART NAME	SEE REPAIR TASK
06C-001 06C-240	Side Wall Post Assembly	06C-245	Nut	Replacement of the Riveted Parts

Table 3073
Reference list for the replacement of permanent installed parts

(a) Remove and disassemble the handle assembly 06C-110 as follows:

1 Remove the security pins 06C-130 from the handle assembly 06C-110.

2 Remove the handle assembly 06C-110 from the aft side wall assembly 06C-010.

3 Remove the special screws 06C-120 and the special washers 06C-140 from the aft side wall assembly 06C-010.

(b) Remove the toilet seat cover dispenser 06C-280 from the screws 06C-290.

(c) Remove the screws 06C-290 from the aft side wall assembly 06C-010.

(d) Remove the studs 06C-230 and the washers 06C-220 from the cover oxygen container assy 06C-150.

(e) Remove the screws 06C-170, the nuts 06C-180 and the cover oxygen container assy 06C-150 from the angle 06C-160.

(f) Remove the screws 06C-210, the washers 06C-220 and the angle 06C-160 from the aft side wall assembly 06C-010.

(g) Remove the ground cable from the oxygen container assy 06C-200.

(h) Remove the screws 06C-210, the washers 06C-220 and the oxygen container assy 06C-200 from the angles 06C-190.

(i) Remove the screws 06C-210, the washers 06C-220 and the angles 06C-190 from the aft side wall assembly 06C-010.

(j) Remove the caps 06C-260, the screws 06C-250, 06C-270, the washers 06C-220 and the post assembly 06C-240.

(k) Disassemble the post assembly 06C-240 as follows:

1 Remove the screws 06C-243.

(l) Remove the screws 06C-030 and the fittings 06C-020 from the brackets 06C-013.

(m) Remove the brackets 06C-013, 06C-017 from the aft side wall assembly 06C-010.

SUB TASK 25-41-51-010-023-F01
D2549010508800 D2549030502400 D2549030502600 D2549030505400 R225401188-006

6. Removal of the Side Wall (06C-1)

NOTE: **See TABLE 3074 for the references for the replacement procedures of permanent installed parts.**

IPL FIG. ITEM	COMPONENT PART NAME	IPL FIG. ITEM	REPLACEMENT PART NAME	SEE REPAIR TASK
06C-001 06C-240	Side Wall Post Assembly	06C-245	Nut	Replacement of the Riveted Parts

Table 3074
Reference list for the replacement of permanent installed parts

(a) Remove and disassemble the handle assembly 06C-110 as follows:

1 Remove the security pins 06C-130 from the handle assembly 06C-110.

2 Remove the handle assembly 06C-110 from the aft side wall assembly 06C-010.

3 Remove the special screws 06C-120 and the special washers 06C-140 from the aft side wall assembly 06C-010.

(b) Remove the toilet seat cover dispenser 06C-280 from the screws 06C-290.

(c) Remove the screws 06C-290 from the aft side wall assembly 06C-010.

(d) Remove the studs 06C-230 and the washers 06C-220 from the cover oxygen container assy 06C-150.

(e) Remove the screws 06C-170, the nuts 06C-180 and the cover oxygen container assy 06C-150 from the angle 06C-160.

(f) Remove the screws 06C-210, the washers 06C-220 and the angle 06C-160 from the aft side wall assembly 06C-010.

(g) Remove the ground cable from the oxygen container assy 06C-200.

(h) Remove the screws 06C-210, the washers 06C-220 and the oxygen container assy 06C-200 from the angles 06C-190.

(i) Remove the screws 06C-210, the washers 06C-220 and the angles 06C-190 from the aft side wall assembly 06C-010.

(j) Remove the caps 06C-260, the screws 06C-250, 06C-270, the washers 06C-220 and the post assembly 06C-240.

(k) Disassemble the post assembly 06C-240 as follows:

1 Remove the screws 06C-243.

(l) Remove the screws 06C-030 and the fittings 06C-020 from the brackets 06C-013.

(m) Remove the brackets 06C-013, 06C-017 from the aft side wall assembly 06C-010.

SUB TASK 25-41-51-010-023-G01
D2549030501000

7. Removal of the Side Wall (06C-1)

NOTE: **See TABLE 3075 for the references for the replacement procedures of permanent installed parts.**

IPL FIG. ITEM	COMPONENT PART NAME	IPL FIG. ITEM	REPLACEMENT PART NAME	SEE REPAIR TASK
06C-001 06C-240	Side Wall Post Assembly	06C-245	Nut	Replacement of the Riveted Parts

Table 3075
Reference list for the replacement of permanent installed parts

(a) Remove and disassemble the handle assembly 06C-110 as follows:

1 Remove the security pins 06C-130 from the handle assembly 06C-110.

2 Remove the handle assembly 06C-110 from the aft side wall assembly 06C-010.

3 Remove the special screws 06C-120 and the special washers 06C-140 from the aft side wall assembly 06C-010.

(b) Remove the studs 06C-230 and the washers 06C-220 from the cover oxygen container assy 06C-150.

(c) Remove the screws 06C-170, the nuts 06C-180 and the cover oxygen container assy 06C-150 from the angle 06C-160.

(d) Remove the screws 06C-210, the washers 06C-220 and the angle 06C-160 from the aft side wall assembly 06C-010.

(e) Remove the ground cable from the oxygen container assy 06C-200.

(f) Remove the screws 06C-210, the washers 06C-220 and the oxygen container assy 06C-200 from the angles 06C-190.

(g) Remove the screws 06C-210, the washers 06C-220 and the angles 06C-190 from the aft side wall assembly 06C-010.

(h) Remove the caps 06C-260, the screws 06C-250, 06C-270, the washers 06C-220 and the post assembly 06C-240.

(i) Disassemble the post assembly 06C-240 as follows:

1 Remove the screws 06C-243.

(j) Remove the screws 06C-030 and the fittings 06C-020 from the brackets 06C-013.

(k) Remove the brackets 06C-013, 06C-017 from the aft side wall assembly 06C-010.

TASK 25-41-51-000-804-E01
D2549010507000 D2549010508200 D2549020505200 D2549020506000 D2549020601000 D2549020602000 D2549020602400 D2549020602600 D2549020603400 D2549030503400 D2549030504800 R225401139-000 R225401145-000

24. Removal of the Side Wall

A. General

A complete disassembly of the component is not necessary and not recommended.

Do not disassemble the component more than it is necessary for:

- Cleaning
- Visual Inspection
- Replacement of defective parts.

B. Job Set-up Information

(1) Not applicable

C. Procedure

WARNING: BE CAREFUL WHEN YOU USE SOLVENTS/CLEANING AGENTS, SEALANTS AND OTHER MATERIALS. OBEY THE MATERIAL MANUFACTURER'S INSTRUCTIONS AND THE LOCAL REGULATIONS. MAKE SURE THAT THERE IS A GOOD FLOW OF AIR THROUGH THE WORK AREA. DO NOT BREATHE THE FUMES. DO NOT SMOKE. DO NOT USE THESE MATERIALS NEAR A FLAME, SPARKS OR SOURCES OF HEAT. USE PROTECTIVE CLOTHING, GOGGLES AND GLOVES. IF YOU GET ONE OF THESE MATERIALS ON YOUR SKIN OR IN YOUR EYES, FLUSH IT AWAY WITH A FLOW OF CLEAN WATER. IF YOU GET ONE OF THESE MATERIALS IN YOUR MOUTH, GET IMMEDIATE MEDICAL AID. IN GENERAL, THESE MATERIALS ARE POISONOUS, FLAMMABLE AND SKIN IRRITANTS.

WARNING: KEEP ALL HYDROCARBONS (FUELS, LUBRICANTS, ETC.) AWAY FROM ALL SOURCES OF OXYGEN. OXYGEN BECOMES EXPLOSIVE WHEN IT TOUCHES HYDROCARBONS.

WARNING: TO PREVENT CONTAMINATION OF THE OXYGEN SYSTEM, MAKE SURE THAT YOUR HANDS AND ALL THE TOOLS ARE CLEAN.

CAUTION: PUT DRY, CLEAN, METAL OR PLASTIC PLUGS ON ALL PIPES OR UNITS REMOVED TEMPORARILY. PUT EACH PIPE OR UNIT IN A SEALED VINYL BAG. UNWANTED MATERIALS IN THE OXYGEN SYSTEM CAN DAMAGE THE SYSTEM.

CAUTION: **DO ALL THE WORK ON A CLEAN, SOFT SURFACE TO PREVENT DAMAGE TO THE COMPONENTS.**

SUB TASK 25-41-51-010-024-A01
D2549010507000 D2549020602000

1. Removal of the Side Wall (06D-1)

NOTE: **See TABLE 3076 for the references for the replacement procedures of permanent installed parts.**

IPL FIG. ITEM	COMPONENT PART NAME	IPL FIG. ITEM	REPLACEMENT PART NAME	SEE REPAIR TASK
06D-001 06D-240	Side Wall Post Assembly	06D-245	Nut	Replacement of the Riveted Parts

Table 3076
Reference list for the replacement of permanent installed parts

(a) Remove and disassemble the handle assembly 06D-110 as follows:

1 Remove the security pins 06D-130 from the handle assembly 06D-110.

2 Remove the handle assembly 06D-110 from the aft side wall assembly 06D-010.

3 Remove the special screws 06D-120 and the special washers 06D-140 from the aft side wall assembly 06D-010.

(b) Remove and disassemble the handle assembly 06D-310 as follows:

1 Remove the security pins 06D-330 from the handle assembly 06D-310.

2 Remove the handle assembly 06D-310 from the aft side wall assembly 06D-010.

3 Remove the special screws 06D-320 and the special washers 06D-340 from the aft side wall assembly 06D-010.

(c) Remove the studs 06D-230 and the washers 06D-220 from the cover oxygen container assy 06D-150.

(d) Remove the screws 06D-170, the nuts 06D-180 and the cover oxygen container assy 06D-150 from the angle 06D-160.

(e) Remove the screws 06D-210, the washers 06D-220 and the angle 06D-160 from the aft side wall assembly 06D-010.

(f) Remove the ground cable from the oxygen container assy 06D-200.

(g) Remove the screws 06D-210, the washers 06D-220 and the oxygen container assy 06D-200 from the angles 06D-190.

(h) Remove the screws 06D-210, the washers 06D-220 and the angles 06D-190 from the aft side wall assembly 06D-010.

(i) Remove the caps 06D-260, the screws 06D-250, 06D-270, the washers 06D-220 and the post assembly 06D-240.

(j) Disassemble the post assembly 06D-240 as follows:

1 Remove the screws 06D-243.

(k) Remove the screws 06D-030 and the fittings 06D-020 from the brackets 06D-013.

(l) Remove the brackets 06D-013, 06D-017 from the aft side wall assembly 06D-010.

SUB TASK 25-41-51-010-024-B01
D2549020602600 D2549030503400 D2549030504800

2. Removal of the Side Wall (06D-1)

NOTE: **See TABLE 3077 for the references for the replacement procedures of permanent installed parts.**

IPL FIG. ITEM	COMPONENT PART NAME	IPL FIG. ITEM	REPLACEMENT PART NAME	SEE REPAIR TASK
06D-001 06D-240	Side Wall Post Assembly	06D-245	Nut	Replacement of the Riveted Parts

Table 3077
Reference list for the replacement of permanent installed parts

(a) Remove and disassemble the handle assembly 06D-110 as follows:

1 Remove the security pins 06D-130 from the handle assembly 06D-110.

2 Remove the handle assembly 06D-110 from the aft side wall assembly 06D-010.

3 Remove the special screws 06D-120 and the special washers 06D-140 from the aft side wall assembly 06D-010.

(b) Remove the toilet seat cover dispenser 06D-280 from the screws 06D-290.

(c) Remove the screws 06D-290 from the aft side wall assembly 06D-010.

(d) Remove the studs 06D-230 and the washers 06D-220 from the cover oxygen container assy 06D-150.

(e) Remove the screws 06D-170, the nuts 06D-180 and the cover oxygen container assy 06D-150 from the angle 06D-160.

(f) Remove the screws 06D-210, the washers 06D-220 and the angle 06D-160 from the aft side wall assembly 06D-010.

(g) Remove the ground cable from the oxygen container assy 06D-200.

(h) Remove the screws 06D-210, the washers 06D-220 and the oxygen container assy 06D-200 from the angles 06D-190.

(i) Remove the screws 06D-210, the washers 06D-220 and the angles 06D-190 from the aft side wall assembly 06D-010.

(j) Remove the caps 06D-260, the screws 06D-250, 06D-270, the washers 06D-220 and the post assembly 06D-240.

(k) Disassemble the post assembly 06D-240 as follows:

1 Remove the screws 06D-243.

(l) Remove the screws 06D-030 and the fittings 06D-020 from the brackets 06D-013.

(m) Remove the brackets 06D-013, 06D-017 from the aft side wall assembly 06D-010.

SUB TASK 25-41-51-010-024-C01
D2549020601000

3. Removal of the Side Wall (06D-1)

NOTE: **See TABLE 3078 for the references for the replacement procedures of permanent installed parts.**

IPL FIG. ITEM	COMPONENT PART NAME	IPL FIG. ITEM	REPLACEMENT PART NAME	SEE REPAIR TASK
06D-001 06D-240	Side Wall Post Assembly	06D-245	Nut	Replacement of the Riveted Parts

Table 3078
Reference list for the replacement of permanent installed parts

(a) Remove and disassemble the handle assembly 06D-110 as follows:

1 Remove the security pins 06D-130 from the handle assembly 06D-110.

2 Remove the handle assembly 06D-110 from the aft side wall assembly 06D-010.

3 Remove the special screws 06D-120 and the special washers 06D-140 from the aft side wall assembly 06D-010.

(b) Remove the toilet seat cover dispenser 06D-280 from the screws 06D-290.

(c) Remove the screws 06D-290 from the aft side wall assembly 06D-010.

(d) Remove the studs 06D-230 and the washers 06D-220 from the cover oxygen container assy 06D-150.

(e) Remove the screws 06D-170, the nuts 06D-180 and the cover oxygen container assy 06D-150 from the angle 06D-160.

(f) Remove the screws 06D-210, the washers 06D-220 and the angle 06D-160 from the aft side wall assembly 06D-010.

(g) Remove the ground cable from the oxygen container assy 06D-200.

(h) Remove the screws 06D-210, the washers 06D-220 and the oxygen container assy 06D-200 from the angles 06D-190.

(i) Remove the screws 06D-210, the washers 06D-220 and the angles 06D-190 from the aft side wall assembly 06D-010.

(j) Remove the caps 06D-260, the screws 06D-250, 06D-270, the washers 06D-220 and the post assembly 06D-240.

(k) Disassemble the post assembly 06D-240 as follows:

1 Remove the screws 06D-243.

(l) Remove the screws 06D-030 and the fittings 06D-020 from the brackets 06D-013.

(m) Remove the brackets 06D-013, 06D-017 from the aft side wall assembly 06D-010.

SUB TASK 25-41-51-010-024-D01
D2549010508200 R225401145-000

4. Removal of the Side Wall (06D-1)

NOTE: **See TABLE 3079 for the references for the replacement procedures of permanent installed parts.**

IPL FIG. ITEM	COMPONENT PART NAME	IPL FIG. ITEM	REPLACEMENT PART NAME	SEE REPAIR TASK
06D-001 06D-240	Side Wall Post Assembly	06D-245	Nut	Replacement of the Riveted Parts

Table 3079
Reference list for the replacement of permanent installed parts

(a) Remove and disassemble the handle assembly 06D-110 as follows:

1 Remove the security pins 06D-130 from the handle assembly 06D-110.

2 Remove the handle assembly 06D-110 from the aft side wall assembly 06D-010.

3 Remove the special screws 06D-120 and the special washers 06D-140 from the aft side wall assembly 06D-010.

(b) Remove the toilet seat cover dispenser 06D-280 from the screws 06D-290.

(c) Remove the screws 06D-290 from the aft side wall assembly 06D-010.

(d) Remove the studs 06D-230 and the washers 06D-220 from the cover oxygen container assy 06D-150.

(e) Remove the screws 06D-170, the nuts 06D-180 and the cover oxygen container assy 06D-150 from the angle 06D-160.

(f) Remove the screws 06D-210, the washers 06D-220 and the angle 06D-160 from the aft side wall assembly 06D-010.

(g) Remove the ground cable from the oxygen container assy 06D-200.

(h) Remove the screws 06D-210, 06D-212, the washers 06D-220 and the oxygen container assy 06D-200 from the angles 06D-190.

(i) Remove the screws 06D-210, the washers 06D-220 and the angles 06D-190 from the aft side wall assembly 06D-010.

(j) Remove the caps 06D-260, the screws 06D-250, 06D-270, the washers 06D-220 and the post assembly 06D-240.

(k) Disassemble the post assembly 06D-240 as follows:

1 Remove the screws 06D-243.

(l) Remove the screws 06D-030 and the fittings 06D-020 from the brackets 06D-013.

(m) Remove the brackets 06D-013, 06D-017 from the aft side wall assembly 06D-010.

SUB TASK 25-41-51-010-024-E01
D2549020506000

5. Removal of the Side Wall (06D-1)

NOTE: **See TABLE 3080 for the references for the replacement procedures of permanent installed parts.**

IPL FIG. ITEM	COMPONENT PART NAME	IPL FIG. ITEM	REPLACEMENT PART NAME	SEE REPAIR TASK
06D-001 06D-240	Side Wall Post Assembly	06D-245	Nut	Replacement of the Riveted Parts

Table 3080
Reference list for the replacement of permanent installed parts

(a) Remove and disassemble the handle assembly 06D-110 as follows:

1 Remove the security pins 06D-130 from the handle assembly 06D-110.

2 Remove the handle assembly 06D-110 from the aft side wall assembly 06D-010.

3 Remove the special screws 06D-120 and the special washers 06D-140 from the aft side wall assembly 06D-010.

(b) Remove the studs 06D-230 and the washers 06D-220 from the cover oxygen container assy 06D-150.

(c) Remove the screws 06D-170, the nuts 06D-180 and the cover oxygen container assy 06D-150 from the angle 06D-160.

(d) Remove the screws 06D-210, the washers 06D-220 and the angle 06D-160 from the aft side wall assembly 06D-010.

(e) Remove the ground cable from the oxygen container assy 06D-200.

(f) Remove the screws 06D-210, the washers 06D-220 and the oxygen container assy 06D-200 from the angles 06D-190.

(g) Remove the screws 06D-210, the washers 06D-220 and the angles 06D-190 from the aft side wall assembly 06D-010.

(h) Remove the caps 06D-260, the screws 06D-250, 06D-270, the washers 06D-220 and the post assembly 06D-240.

(i) Disassemble the post assembly 06D-240 as follows:

1 Remove the screws 06D-243.

(j) Remove the screws 06D-030 and the fittings 06D-020 from the brackets 06D-013.

(k) Remove the brackets 06D-013, 06D-017 from the aft side wall assembly 06D-010.

SUB TASK 25-41-51-010-024-F01
D2549020602400 D2549020603400 R225401139-000

6. Removal of the Side Wall (06D-1)

NOTE: **See TABLE 3081 for the references for the replacement procedures of permanent installed parts.**

IPL FIG. ITEM	COMPONENT PART NAME	IPL FIG. ITEM	REPLACEMENT PART NAME	SEE REPAIR TASK
06D-001 06D-240	Side Wall Post Assembly	06D-245	Nut	Replacement of the Riveted Parts

Table 3081
Reference list for the replacement of permanent installed parts

(a) Remove and disassemble the handle assembly 06D-110 as follows:

1 Remove the security pins 06D-130 from the handle assembly 06D-110.

2 Remove the handle assembly 06D-110 from the aft side wall assembly 06D-010.

3 Remove the special screws 06D-120 and the special washers 06D-140 from the aft side wall assembly 06D-010.

(b) Remove the studs 06D-230 and the washers 06D-220 from the cover oxygen container assy 06D-150.

(c) Remove the screws 06D-170, the nuts 06D-180 and the cover oxygen container assy 06D-150 from the angle 06D-160.

(d) Remove the screws 06D-210, the washers 06D-220 and the angle 06D-160 from the aft side wall assembly 06D-010.

(e) Remove the ground cable from the oxygen container assy 06D-200.

(f) Remove the screws 06D-210, 06D-212, the washers 06D-220, 06D-225 and the oxygen container assy 06D-200 from the angles 06D-190.

(g) Remove the screws 06D-210, the washers 06D-220 and the angles 06D-190 from the aft side wall assembly 06D-010.

(h) Remove the caps 06D-260, the screws 06D-250, 06D-270, the washers 06D-220 and the post assembly 06D-240.

(i) Disassemble the post assembly 06D-240 as follows:

1 Remove the screws 06D-243.

(j) Remove the screws 06D-030 and the fittings 06D-020 from the brackets 06D-013.

(k) Remove the brackets 06D-013, 06D-017 from the aft side wall assembly 06D-010.

SUB TASK 25-41-51-010-024-G01
D2549020505200

7. Removal of the Side Wall (06D-1)

NOTE: **See TABLE 3082 for the references for the replacement procedures of permanent installed parts.**

IPL FIG. ITEM	COMPONENT PART NAME	IPL FIG. ITEM	REPLACEMENT PART NAME	SEE REPAIR TASK
06D-001 06D-240	Side Wall Post Assembly	06D-245	Nut	Replacement of the Riveted Parts

Table 3082
Reference list for the replacement of permanent installed parts

(a) Remove and disassemble the handle assembly 06D-110 as follows:

1 Remove the security pins 06D-130 from the handle assembly 06D-110.

2 Remove the handle assembly 06D-110 from the aft side wall assembly 06D-010.

3 Remove the special screws 06D-120 and the special washers 06D-140 from the aft side wall assembly 06D-010.

(b) Remove the studs 06D-230 and the washers 06D-220 from the cover oxygen container assy 06D-150.

(c) Remove the screws 06D-170, the nuts 06D-180 and the cover oxygen container assy 06D-150 from the angle 06D-160.

(d) Remove the screws 06D-210, the washers 06D-220 and the angle 06D-160 from the aft side wall assembly 06D-010.

(e) Remove the ground cable from the oxygen container assy 06D-200.

(f) Remove the screws 06D-210, the washers 06D-220 and the oxygen container assy 06D-200 from the angles 06D-190.

(g) Remove the screws 06D-210, the washers 06D-220 and the angles 06D-190 from the aft side wall assembly 06D-010.

(h) Remove the caps 06D-260, the screws 06D-250, 06D-270, the washers 06D-220 and the post assembly 06D-240.

(i) Disassemble the post assembly 06D-240 as follows:

1 Remove the screws 06D-243.

(j) Remove the screws 06D-030 and the fittings 06D-020 from the brackets 06D-013.

(k) Remove the brackets 06D-013, 06D-017 from the aft side wall assembly 06D-010.

TASK 25-41-51-000-804-F01
D2549010505000 D2549010506800 D2549010508000 D2549010508400 D2549010508600 D2549010509000 D2549010509200 D2549010510800 D2549010511000 D2549010513200 D2549010601000 D2549010604000 D2549020601800 D2549020603600 D2549020603800 D2549020605800 D2549020606600 D2549020607000 D2549030401600 D2549030403000 D2549030407400 D2549030503600 D2549030505200 R225401137-000 R225401159-000 R225401199-000 R225401199-008 R225401199-010

25. Removal of the Side Wall

A. General

A complete disassembly of the component is not necessary and not recommended.

Do not disassemble the component more than it is necessary for:

- Cleaning
- Visual Inspection
- Replacement of defective parts.

B. Job Set-up Information
(1) Consumable Materials

REFERENCE	DESIGNATION
08-017A	Adhesive Structuralflexible

Table 3083
Consumable Materials

C. Procedure

WARNING: **BE CAREFUL WHEN YOU USE SOLVENTS/CLEANING AGENTS, SEALANTS AND OTHER MATERIALS. OBEY THE MATERIAL MANUFACTURER'S INSTRUCTIONS AND THE LOCAL REGULATIONS. MAKE SURE THAT THERE IS A GOOD FLOW OF AIR THROUGH THE WORK AREA. DO NOT BREATHE THE FUMES. DO NOT SMOKE. DO NOT USE THESE MATERIALS NEAR A FLAME, SPARKS OR SOURCES OF HEAT. USE PROTECTIVE CLOTHING, GOGGLES AND GLOVES. IF YOU GET ONE OF THESE MATERIALS ON YOUR SKIN OR IN YOUR EYES, FLUSH IT AWAY WITH A FLOW OF CLEAN WATER. IF YOU GET ONE OF THESE MATERIALS IN YOUR MOUTH, GET IMMEDIATE MEDICAL AID. IN GENERAL, THESE MATERIALS ARE POISONOUS, FLAMMABLE AND SKIN IRRITANTS.**

WARNING: **KEEP ALL HYDROCARBONS (FUELS, LUBRICANTS, ETC.) AWAY FROM ALL SOURCES OF OXYGEN. OXYGEN BECOMES EXPLOSIVE WHEN IT TOUCHES HYDROCARBONS.**

WARNING: **TO PREVENT CONTAMINATION OF THE OXYGEN SYSTEM, MAKE SURE THAT YOUR HANDS AND ALL THE TOOLS ARE CLEAN.**

CAUTION: **PUT DRY, CLEAN, METAL OR PLASTIC PLUGS ON ALL PIPES OR UNITS REMOVED TEMPORARILY. PUT EACH PIPE OR UNIT IN A SEALED VINYL BAG. UNWANTED MATERIALS IN THE OXYGEN SYSTEM CAN DAMAGE THE SYSTEM.**

CAUTION: **DO ALL THE WORK ON A CLEAN, SOFT SURFACE TO PREVENT DAMAGE TO THE COMPONENTS.**

SUB TASK 25-41-51-010-025-A01
D2549010509000 D2549010513200 D2549010601000 D2549010604000

1. Removal of the Side Wall (06E-1)

NOTE: **See TABLE 3084 for the references for the replacement procedures of permanent installed parts.**
More data for bonded parts are given in column SEE REPAIR TASK. Use the data for the selection of the related repair solution.

IPL FIG. ITEM	COMPONENT PART NAME	IPL FIG. ITEM	REPLACEMENT PART NAME	SEE REPAIR TASK
06E-001 06E-240	Side Wall Post Assembly	06E-245	Nut	Replacement of the Riveted Parts
06E-001	Side Wall	06E-320	Reinforcing Strip	Replacement of the Bonded Parts Material No. 08-017A Adhesive Structuralflexible

Table 3084
Reference list for the replacement of permanent installed parts

(a) Remove and disassemble the handle assembly 06E-110 as follows:

1 Remove the security pins 06E-130 from the handle assembly 06E-110.

2 Remove the handle assembly 06E-110 from the aft side wall assembly 06E-010.

3 Remove the special screws 06E-120 and the special washers 06E-140 from the aft side wall assembly 06E-010.

(b) Remove the screws 06E-251, the washers 06E-221 and the support 06E-300 from the aft side wall assembly 06E-010.

(c) Remove the studs 06E-230 and the washers 06E-220 from the cover oxygen container assy 06E-150.

(d) Remove the screws 06E-170, the nuts 06E-180 and the cover oxygen container assy 06E-150 from the angle 06E-160.

(e) Remove the screws 06E-210, the washers 06E-220 and the angle 06E-160 from the aft side wall assembly 06E-010.

(f) Remove the ground cable from the oxygen container assy 06E-200.

(g) Remove the screws 06E-210, the washers 06E-220 and the oxygen container assy 06E-200 from the angles 06E-190.

(h) Remove the screws 06E-210, the washers 06E-220 and the angles 06E-190 from the aft side wall assembly 06E-010.

(i) Remove the caps 06E-260, the screws 06E-250, 06E-270, the washers 06E-220 and the post assembly 06E-240.

(j) Disassemble the post assembly 06E-240 as follows:

1 Remove the screws 06E-243.

(k) Remove the screws 06E-030, 06E-035 and the fittings 06E-020, 06E-025 from the brackets 06E-013.

(l) Remove the brackets 06E-013, 06E-017 from the aft side wall assembly 06E-010.

SUB TASK 25-41-51-010-025-B01
D2549010506800

2. Removal of the Side Wall (06E-1)

NOTE: **See TABLE 3085 for the references for the replacement procedures of permanent installed parts.**

IPL FIG. ITEM	COMPONENT PART NAME	IPL FIG. ITEM	REPLACEMENT PART NAME	SEE REPAIR TASK
06E-001 06E-240	Side Wall Post Assembly	06E-245	Nut	Replacement of the Riveted Parts

Table 3085
Reference list for the replacement of permanent installed parts

(a) Remove and disassemble the handle assembly 06E-110 as follows:

1 Remove the security pins 06E-130 from the handle assembly 06E-110.

2 Remove the handle assembly 06E-110 from the aft side wall assembly 06E-010.

3 Remove the special screws 06E-120 and the special washers 06E-140 from the aft side wall assembly 06E-010.

(b) Remove the screws 06E-251, the washers 06E-221 and the support 06E-300 from the aft side wall assembly 06E-010.

(c) Remove the studs 06E-230 and the washers 06E-220 from the cover oxygen container assy 06E-150.

(d) Remove the screws 06E-170, the nuts 06E-180 and the cover oxygen container assy 06E-150 from the angle 06E-160.

(e) Remove the screws 06E-210, the washers 06E-220 and the angle 06E-160 from the aft side wall assembly 06E-010.

(f) Remove the ground cable from the oxygen container assy 06E-200.

(g) Remove the screws 06E-210, the washers 06E-220 and the oxygen container assy 06E-200 from the angles 06E-190.

(h) Remove the screws 06E-210, the washers 06E-220 and the angles 06E-190 from the aft side wall assembly 06E-010.

(i) Remove the caps 06E-260, the screws 06E-250, 06E-270, the washers 06E-220 and the post assembly 06E-240.

(j) Disassemble the post assembly 06E-240 as follows:

1 Remove the screws 06E-243.

(k) Remove the screws 06E-030, 06E-035 and the fittings 06E-020, 06E-025 from the brackets 06E-013.

(l) Remove the brackets 06E-013, 06E-017 from the aft side wall assembly 06E-010.

SUB TASK 25-41-51-010-025-C01
D2549010508400

3. Removal of the Side Wall (06E-1)

NOTE: **See TABLE 3086 for the references for the replacement procedures of permanent installed parts.**
More data for bonded parts are given in column SEE REPAIR TASK. Use the data for the selection of the related repair solution.

IPL FIG. ITEM	COMPONENT PART NAME	IPL FIG. ITEM	REPLACEMENT PART NAME	SEE REPAIR TASK
06E-001 06E-240	Side Wall Post Assembly	06E-245	Nut	Replacement of the Riveted Parts
06E-001	Side Wall	06E-320	Reinforcing Strip	Replacement of the Bonded Parts Material No. 08-017A Adhesive Structuralflexible

Table 3086
Reference list for the replacement of permanent installed parts

(a) Remove and disassemble the handle assembly 06E-110 as follows:

1 Remove the security pins 06E-130 from the handle assembly 06E-110.

2 Remove the handle assembly 06E-110 from the aft side wall assembly 06E-010.

3 Remove the special screws 06E-120 and the special washers 06E-140 from the aft side wall assembly 06E-010.

(b) Remove the studs 06E-230 and the washers 06E-220 from the cover oxygen container assy 06E-150.

(c) Remove the screws 06E-170, the nuts 06E-180 and the cover oxygen container assy 06E-150 from the angle 06E-160.

(d) Remove the screws 06E-210, the washers 06E-220 and the angle 06E-160 from the aft side wall assembly 06E-010.

(e) Remove the ground cable from the oxygen container assy 06E-200.

(f) Remove the screws 06E-210, the washers 06E-220 and the oxygen container assy 06E-200 from the angles 06E-190.

(g) Remove the screws 06E-210, the washers 06E-220 and the angles 06E-190 from the aft side wall assembly 06E-010.

(h) Remove the screws 06E-440, 06E-460, the washers 06E-430 and the angle 06E-420 from the aft side wall assembly 06E-010.

(i) Remove the caps 06E-260, the screws 06E-250, 06E-270, the washers 06E-220 and the post assembly 06E-240.

(j) Disassemble the post assembly 06E-240 as follows:

1 Remove the screws 06E-243.

(k) Remove the screws 06E-030, 06E-035 and the fittings 06E-020, 06E-025 from the brackets 06E-013.

(l) Remove the brackets 06E-013, 06E-017 from the aft side wall assembly 06E-010.

SUB TASK 25-41-51-010-025-E01
D2549030401600 D2549030403000 D2549030407400 R225401199-000 R225401199-008 R225401199-010

4. Removal of the Side Wall (06E-1)

NOTE: **See TABLE 3087 for the references for the replacement procedures of permanent installed parts.**

IPL FIG. ITEM	COMPONENT PART NAME	IPL FIG. ITEM	REPLACEMENT PART NAME	SEE REPAIR TASK
06E-001 06E-240	Side Wall Post Assembly	06E-245	Nut	Replacement of the Riveted Parts

Table 3087
Reference list for the replacement of permanent installed parts

(a) Remove and disassemble the handle assembly 06E-110 as follows:

1 Remove the security pins 06E-130 from the handle assembly 06E-110.

2 Remove the handle assembly 06E-110 from the aft side wall assembly 06E-010.

3 Remove the special screws 06E-120 and the special washers 06E-140 from the aft side wall assembly 06E-010.

(b) Remove the toilet seat cover dispenser 06E-280 from the screws 06E-290.

(c) Remove the screws 06E-290 from the aft side wall assembly 06E-010.

(d) Remove the studs 06E-230 and the washers 06E-220 from the cover oxygen container assy 06E-150.

(e) Remove the screws 06E-170, the nuts 06E-180 and the cover oxygen container assy 06E-150 from the angle 06E-160.

(f) Remove the screws 06E-210, the washers 06E-220 and the angle 06E-160 from the aft side wall assembly 06E-010.

(g) Remove the ground cable from the oxygen container assy 06E-200.

(h) Remove the screws 06E-210, the washers 06E-220 and the oxygen container assy 06E-200 from the angles 06E-190.

(i) Remove the screws 06E-210, the washers 06E-220 and the angles 06E-190 from the aft side wall assembly 06E-010.

(j) Remove the screws 06E-440, 06E-460, the washers 06E-430 and the angle 06E-420 from the aft side wall assembly 06E-010.

(k) Remove the caps 06E-260, the screws 06E-250, 06E-270, the washers 06E-220 and the post assembly 06E-240.

(l) Disassemble the post assembly 06E-240 as follows:

1 Remove the screws 06E-243.

(m) Remove the screws 06E-030, 06E-035 and the fittings 06E-020, 06E-025 from the brackets 06E-013.

(n) Remove the brackets 06E-013, 06E-017 from the aft side wall assembly 06E-010.

SUB TASK 25-41-51-010-025-F01
D2549010508000

5. Removal of the Side Wall (06E-1)

NOTE: **See TABLE 3088 for the references for the replacement procedures of permanent installed parts.**

IPL FIG. ITEM	COMPONENT PART NAME	IPL FIG. ITEM	REPLACEMENT PART NAME	SEE REPAIR TASK
06E-001 06E-240	Side Wall Post Assembly	06E-245	Nut	Replacement of the Riveted Parts

Table 3088
Reference list for the replacement of permanent installed parts

(a) Remove and disassemble the handle assembly 06E-110 as follows:

1 Remove the security pins 06E-130 from the handle assembly 06E-110.

2 Remove the handle assembly 06E-110 from the aft side wall assembly 06E-010.

3 Remove the special screws 06E-120 and the special washers 06E-140 from the aft side wall assembly 06E-010.

(b) Remove the toilet seat cover dispenser 06E-280 from the screws 06E-290.

(c) Remove the screws 06E-290 from the aft side wall assembly 06E-010.

(d) Remove the studs 06E-230 and the washers 06E-220 from the cover oxygen container assy 06E-150.

(e) Remove the screws 06E-170, the nuts 06E-180 and the cover oxygen container assy 06E-150 from the angle 06E-160.

(f) Remove the screws 06E-210, the washers 06E-220 and the angle 06E-160 from the aft side wall assembly 06E-010.

(g) Remove the ground cable from the oxygen container assy 06E-200.

(h) Remove the screws 06E-210, the washers 06E-220 and the oxygen container assy 06E-200 from the angles 06E-190.

(i) Remove the screws 06E-210, the washers 06E-220 and the angles 06E-190 from the aft side wall assembly 06E-010.

(j) Remove the screws 06E-440, 06E-460, the washers 06E-430 and the angle 06E-420 from the aft side wall assembly 06E-010.

(k) Remove the caps 06E-260, the screws 06E-250, 06E-270, the washers 06E-220 and the post assembly 06E-240.

(l) Disassemble the post assembly 06E-240 as follows:

1 Remove the screws 06E-243.

(m) Remove the screws 06E-030, 06E-035 and the fittings 06E-020, 06E-025 from the aft side wall assembly 06E-010.

SUB TASK 25-41-51-010-025-G01
D2549020606600 D2549020607000 D2549030505200 R225401137-000 R225401159-000

6. Removal of the Side Wall (06E-1)

NOTE: **See TABLE 3089 for the references for the replacement procedures of permanent installed parts.**

IPL FIG. ITEM	COMPONENT PART NAME	IPL FIG. ITEM	REPLACEMENT PART NAME	SEE REPAIR TASK
06E-001 06E-240	Side Wall Post Assembly	06E-245	Nut	Replacement of the Riveted Parts

Table 3089
Reference list for the replacement of permanent installed parts

(a) Remove and disassemble the handle assembly 06E-110 as follows:

1 Remove the security pins 06E-130 from the handle assembly 06E-110.

2 Remove the handle assembly 06E-110 from the aft side wall assembly 06E-010.

3 Remove the special screws 06E-120 and the special washers 06E-140 from the aft side wall assembly 06E-010.

(b) Remove the toilet seat cover dispenser 06E-280 from the screws 06E-290.

(c) Remove the screws 06E-290 from the aft side wall assembly 06E-010.

(d) Remove the studs 06E-230 and the washers 06E-220 from the cover oxygen container assy 06E-150.

(e) Remove the screws 06E-170, the nuts 06E-180 and the cover oxygen container assy 06E-150 from the angle 06E-160.

(f) Remove the screws 06E-210, the washers 06E-220 and the angle 06E-160 from the aft side wall assembly 06E-010.

(g) Remove the ground cable from the oxygen container assy 06E-200.

(h) Remove the screws 06E-210, 06E-215, the washers 06E-220 and the oxygen container assy 06E-200 from the angles 06E-190.

(i) Remove the screws 06E-210, the washers 06E-220 and the angles 06E-190 from the aft side wall assembly 06E-010.

(j) Remove the caps 06E-260, the screws 06E-250, 06E-270, the washers 06E-220 and the post assembly 06E-240.

(k) Disassemble the post assembly 06E-240 as follows:

1 Remove the screws 06E-243.

(l) Remove the screws 06E-030, 06E-035 and the fittings 06E-020, 06E-025 from the brackets 06E-013.

(m) Remove the brackets 06E-013, 06E-017 from the aft side wall assembly 06E-010.

SUB TASK 25-41-51-010-025-H01
D2549020603600

7. Removal of the Side Wall (06E-1)

NOTE: **See TABLE 3090 for the references for the replacement procedures of permanent installed parts.**

IPL FIG. ITEM	COMPONENT PART NAME	IPL FIG. ITEM	REPLACEMENT PART NAME	SEE REPAIR TASK
06E-001 06E-240	Side Wall Post Assembly	06E-245	Nut	Replacement of the Riveted Parts

Table 3090
Reference list for the replacement of permanent installed parts

(a) Remove and disassemble the handle assembly 06E-110 as follows:

1 Remove the security pins 06E-130 from the handle assembly 06E-110.

2 Remove the handle assembly 06E-110 from the aft side wall assembly 06E-010.

3 Remove the special screws 06E-120 and the special washers 06E-140 from the aft side wall assembly 06E-010.

(b) Remove the toilet seat cover dispenser 06E-280 from the screws 06E-290.

(c) Remove the screws 06E-290 from the aft side wall assembly 06E-010.

(d) Remove the studs 06E-230 and the washers 06E-220 from the cover oxygen container assy 06E-150.

(e) Remove the screws 06E-170, the nuts 06E-180 and the cover oxygen container assy 06E-150 from the angle 06E-160.

(f) Remove the screws 06E-210, the washers 06E-220 and the angle 06E-160 from the aft side wall assembly 06E-010.

(g) Remove the ground cable from the oxygen container assy 06E-200.

(h) Remove the screws 06E-210, the washers 06E-220 and the oxygen container assy 06E-200 from the angles 06E-190.

(i) Remove the screws 06E-210, the washers 06E-220 and the angles 06E-190 from the aft side wall assembly 06E-010.

(j) Remove the caps 06E-260, the screws 06E-250, 06E-270, the washers 06E-220 and the post assembly 06E-240.

(k) Disassemble the post assembly 06E-240 as follows:

1 Remove the screws 06E-243.

(l) Remove the screws 06E-030, 06E-035 and the fittings 06E-020, 06E-025 from the brackets 06E-013.

(m) Remove the brackets 06E-013, 06E-017 from the aft side wall assembly 06E-010.

SUB TASK 25-41-51-010-025-K01
D2549010505000 D2549010508600 D2549010509200 D2549010510800 D2549010511000 D2549020601800

8. Removal of the Side Wall (06E-1)

NOTE: **See TABLE 3091 for the references for the replacement procedures of permanent installed parts.**

IPL FIG. ITEM	COMPONENT PART NAME	IPL FIG. ITEM	REPLACEMENT PART NAME	SEE REPAIR TASK
06E-001 06E-240	Side Wall Post Assembly	06E-245	Nut	Replacement of the Riveted Parts

Table 3091
Reference list for the replacement of permanent installed parts

(a) Remove and disassemble the handle assembly 06E-110 as follows:

1 Remove the security pins 06E-130 from the handle assembly 06E-110.

2 Remove the handle assembly 06E-110 from the aft side wall assembly 06E-010.

3 Remove the special screws 06E-120 and the special washers 06E-140 from the aft side wall assembly 06E-010.

(b) Remove the studs 06E-230 and the washers 06E-220 from the cover oxygen container assy 06E-150.

(c) Remove the screws 06E-170, the nuts 06E-180 and the cover oxygen container assy 06E-150 from the angle 06E-160.

(d) Remove the screws 06E-210, the washers 06E-220 and the angle 06E-160 from the aft side wall assembly 06E-010.

(e) Remove the ground cable from the oxygen container assy 06E-200.

(f) Remove the screws 06E-210, the washers 06E-220 and the oxygen container assy 06E-200 from the angles 06E-190.

(g) Remove the screws 06E-210, the washers 06E-220 and the angles 06E-190 from the aft side wall assembly 06E-010.

(h) Remove the caps 06E-260, the screws 06E-250, 06E-270, the washers 06E-220 and the post assembly 06E-240.

(i) Disassemble the post assembly 06E-240 as follows:

1 Remove the screws 06E-243.

(j) Remove the screws 06E-030, 06E-035 and the fittings 06E-020, 06E-025 from the brackets 06E-013.

(k) Remove the brackets 06E-013, 06E-017 from the aft side wall assembly 06E-010.

SUB TASK 25-41-51-010-025-L01
D2549030503600

9. Removal of the Side Wall (06E-1)

NOTE: **See TABLE 3092 for the references for the replacement procedures of permanent installed parts.**

IPL FIG. ITEM	COMPONENT PART NAME	IPL FIG. ITEM	REPLACEMENT PART NAME	SEE REPAIR TASK
06E-001 06E-240	Side Wall Post Assembly	06E-245	Nut	Replacement of the Riveted Parts

Table 3092
Reference list for the replacement of permanent installed parts

(a) Remove and disassemble the handle assembly 06E-110 as follows:

1 Remove the security pins 06E-130 from the handle assembly 06E-110.

2 Remove the handle assembly 06E-110 from the aft side wall assembly 06E-010.

3 Remove the special screws 06E-120 and the special washers 06E-140 from the aft side wall assembly 06E-010.

(b) Remove the studs 06E-230 and the washers 06E-220 from the cover oxygen container assy 06E-150.

(c) Remove the screws 06E-170, the nuts 06E-180 and the cover oxygen container assy 06E-150 from the angle 06E-160.

(d) Remove the screws 06E-210, the washers 06E-220 and the angle 06E-160 from the aft side wall assembly 06E-010.

(e) Remove the ground cable from the oxygen container assy 06E-200.

(f) Remove the screws 06E-210, the washers 06E-220 and the oxygen container assy 06E-200 from the angles 06E-190.

(g) Remove the screws 06E-210, the washers 06E-220 and the angles 06E-190 from the aft side wall assembly 06E-010.

(h) Remove the caps 06E-260, the screws 06E-250, 06E-270, the washers 06E-220 and the post assembly 06E-240.

(i) Disassemble the post assembly 06E-240 as follows:

1 Remove the screws 06E-243.

(j) Remove the screws 06E-030, 06E-035 and the fittings 06E-020, 06E-025 from the brackets 06E-013.

(k) Remove the brackets 06E-013, 06E-017 from the aft side wall assembly 06E-010.

SUB TASK 25-41-51-010-025-M01
D2549020603800

10. Removal of the Side Wall (06E-1)

NOTE: **See TABLE 3093 for the references for the replacement procedures of permanent installed parts.**

IPL FIG. ITEM	COMPONENT PART NAME	IPL FIG. ITEM	REPLACEMENT PART NAME	SEE REPAIR TASK
06E-001 06E-240	Side Wall Post Assembly	06E-245	Nut	Replacement of the Riveted Parts

Table 3093
Reference list for the replacement of permanent installed parts

(a) Remove and disassemble the handle assembly 06E-110 as follows:

1 Remove the security pins 06E-130 from the handle assembly 06E-110.

2 Remove the handle assembly 06E-110 from the aft side wall assembly 06E-010.

3 Remove the special screws 06E-120 and the special washers 06E-140 from the aft side wall assembly 06E-010.

(b) Remove the studs 06E-230 and the washers 06E-220 from the cover oxygen container assy 06E-150.

(c) Remove the screws 06E-170, the nuts 06E-180 and the cover oxygen container assy 06E-150 from the angle 06E-160.

(d) Remove the screws 06E-210, the washers 06E-220 and the angle 06E-160 from the aft side wall assembly 06E-010.

(e) Remove the ground cable from the oxygen container assy 06E-200.

(f) Remove the screws 06E-210, the washers 06E-220 and the oxygen container assy 06E-200 from the angles 06E-190.

(g) Remove the screws 06E-210, the washers 06E-220 and the angles 06E-190 from the aft side wall assembly 06E-010.

(h) Remove the caps 06E-260, the screws 06E-250, 06E-270, the washers 06E-220 and the post assembly 06E-240.

(i) Disassemble the post assembly 06E-240 as follows:

1 Remove the screws 06E-243.

(j) Remove the screws 06E-030, 06E-035 and the fittings 06E-020, 06E-025 from the brackets 06E-013.

(k) Remove the brackets 06E-013, 06E-017 from the aft side wall assembly 06E-010.

SUB TASK 25-41-51-010-025-N01
D2549020605800

11. Removal of the Side Wall (06E-1)

NOTE: **See TABLE 3094 for the references for the replacement procedures of permanent installed parts.**

IPL FIG. ITEM	COMPONENT PART NAME	IPL FIG. ITEM	REPLACEMENT PART NAME	SEE REPAIR TASK
06E-001 06E-240	Side Wall Post Assembly	06E-245	Nut	Replacement of the Riveted Parts

Table 3094
Reference list for the replacement of permanent installed parts

(a) Remove and disassemble the handle assembly 06E-110 as follows:

1 Remove the security pins 06E-130 from the handle assembly 06E-110.

2 Remove the handle assembly 06E-110 from the aft side wall assembly 06E-010.

3 Remove the special screws 06E-120 and the special washers 06E-140 from the aft side wall assembly 06E-010.

(b) Remove the studs 06E-230 and the washers 06E-220 from the cover oxygen container assy 06E-150.

(c) Remove the screws 06E-170, the nuts 06E-180 and the cover oxygen container assy 06E-150 from the angle 06E-160.

(d) Remove the screws 06E-210, the washers 06E-220 and the angle 06E-160 from the aft side wall assembly 06E-010.

(e) Remove the ground cable from the oxygen container assy 06E-200.

(f) Remove the screws 06E-210, the washers 06E-220 and the oxygen container assy 06E-200 from the angles 06E-190.

(g) Remove the screws 06E-210, the washers 06E-220 and the angles 06E-190 from the aft side wall assembly 06E-010.

(h) Remove the caps 06E-260, the screws 06E-250, 06E-270, the washers 06E-220 and the post assembly 06E-240.

(i) Disassemble the post assembly 06E-240 as follows:

1 Remove the screws 06E-243.

(j) Remove the screws 06E-030, 06E-035 and the fittings 06E-020, 06E-025 from the aft side wall assembly 06E-010.

TASK 25-41-51-000-804-G01
D2549010509400 D2549010509600 D2549010510400 D2549010511400 D2549020506200 D2549020604200 D2549020605200 D2549020607200 D2549020609200 D2549030504000 D2549030504600 D2549030505600 D2549030506000 R225401160-002

26. Removal of the Side Wall

A. General

A complete disassembly of the component is not necessary and not recommended.

Do not disassemble the component more than it is necessary for:

- Cleaning
- Visual Inspection
- Replacement of defective parts.

B. Job Set-up Information

(1) Not applicable

C. Procedure

WARNING: BE CAREFUL WHEN YOU USE SOLVENTS/CLEANING AGENTS, SEALANTS AND OTHER MATERIALS. OBEY THE MATERIAL MANUFACTURER'S INSTRUCTIONS AND THE LOCAL REGULATIONS. MAKE SURE THAT THERE IS A GOOD FLOW OF AIR THROUGH THE WORK AREA. DO NOT BREATHE THE FUMES. DO NOT SMOKE. DO NOT USE THESE MATERIALS NEAR A FLAME, SPARKS OR SOURCES OF HEAT. USE PROTECTIVE CLOTHING, GOGGLES AND GLOVES. IF YOU GET ONE OF THESE MATERIALS ON YOUR SKIN OR IN YOUR EYES, FLUSH IT AWAY WITH A FLOW OF CLEAN WATER. IF YOU GET ONE OF THESE MATERIALS IN YOUR MOUTH, GET IMMEDIATE MEDICAL AID. IN GENERAL, THESE MATERIALS ARE POISONOUS, FLAMMABLE AND SKIN IRRITANTS.

WARNING: KEEP ALL HYDROCARBONS (FUELS, LUBRICANTS, ETC.) AWAY FROM ALL SOURCES OF OXYGEN. OXYGEN BECOMES EXPLOSIVE WHEN IT TOUCHES HYDROCARBONS.

WARNING: TO PREVENT CONTAMINATION OF THE OXYGEN SYSTEM, MAKE SURE THAT YOUR HANDS AND ALL THE TOOLS ARE CLEAN.

CAUTION: **PUT DRY, CLEAN, METAL OR PLASTIC PLUGS ON ALL PIPES OR UNITS REMOVED TEMPORARILY. PUT EACH PIPE OR UNIT IN A SEALED VINYL BAG. UNWANTED MATERIALS IN THE OXYGEN SYSTEM CAN DAMAGE THE SYSTEM.**

CAUTION: **DO ALL THE WORK ON A CLEAN, SOFT SURFACE TO PREVENT DAMAGE TO THE COMPONENTS.**

SUB TASK 25-41-51-010-026-A01
D2549010511400

1. Removal of the Side Wall (06F-1)

NOTE: **See TABLE 3095 for the references for the replacement procedures of permanent installed parts.**

IPL FIG. ITEM	COMPONENT PART NAME	IPL FIG. ITEM	REPLACEMENT PART NAME	SEE REPAIR TASK
06F-001 06F-240	Side Wall Post Assembly	06F-245	Nut	Replacement of the Riveted Parts

Table 3095
Reference list for the replacement of permanent installed parts

(a) Remove and disassemble the handle assembly 06F-110 as follows:

1 Remove the security pins 06F-130 from the handle assembly 06F-110.

2 Remove the handle assembly 06F-110 from the aft side wall assembly 06F-010.

3 Remove the special screws 06F-120 and the special washers 06F-140 from the aft side wall assembly 06F-010.

(b) Remove the toilet seat cover dispenser 06F-280 from the screws 06F-290.

(c) Remove the screws 06F-290 from the aft side wall assembly 06F-010.

(d) Remove the screw 06F-310 and the coat hook 06F-300.

(e) Remove the studs 06F-230 and the washers 06F-220 from the cover oxygen container assy 06F-150.

(f) Remove the screws 06F-170, the nuts 06F-180 and the cover oxygen container assy 06F-150 from the angle 06F-160.

(g) Remove the screws 06F-210, the washers 06F-220 and the angle 06F-160 from the aft side wall assembly 06F-010.

(h) Remove the ground cable from the oxygen container assy 06F-200.

(i) Remove the screws 06F-210, the washers 06F-220 and the oxygen container assy 06F-200 from the angles 06F-190.

(j) Remove the screws 06F-210, the washers 06F-220 and the angles 06F-190 from the aft side wall assembly 06F-010.

(k) Remove the caps 06F-260, the screws 06F-250, 06F-270, the washers 06F-220 and the post assembly 06F-240.

(l) Disassemble the post assembly 06F-240 as follows:

1 Remove the screws 06F-243.

(m) Remove the screws 06F-030 and the fittings 06F-020 from the brackets 06F-013.

(n) Remove the brackets 06F-013, 06F-017 from the aft side wall assembly 06F-010.

SUB TASK 25-41-51-010-026-B01
D2549020609200 D2549030506000 R225401160-002

2. Removal of the Side Wall (06F-1)

NOTE: **See TABLE 3096 for the references for the replacement procedures of permanent installed parts.**

IPL FIG. ITEM	COMPONENT PART NAME	IPL FIG. ITEM	REPLACEMENT PART NAME	SEE REPAIR TASK
06F-001 06F-240	Side Wall Post Assembly	06F-245	Nut	Replacement of the Riveted Parts

Table 3096
Reference list for the replacement of permanent installed parts

(a) Remove and disassemble the handle assembly 06F-110 as follows:

1 Remove the security pins 06F-130 from the handle assembly 06F-110.

2 Remove the handle assembly 06F-110 from the aft side wall assembly 06F-010.

3 Remove the special screws 06F-120 and the special washers 06F-140 from the aft side wall assembly 06F-010.

(b) Remove and disassemble the handle assembly 06F-340 as follows:

1 Remove the security pins 06F-360 from the handle assembly 06F-340.

2 Remove the handle assembly 06F-340 from the aft side wall assembly 06F-010.

3 Remove the special screws 06F-350 and the special washers 06F-370 from the aft side wall assembly 06F-010.

(c) Remove the studs 06F-230 and the washers 06F-220 from the cover oxygen container assy 06F-150.

(d) Remove the screws 06F-170, the nuts 06F-180 and the cover oxygen container assy 06F-150 from the angle 06F-160.

(e) Remove the screws 06F-210, the washers 06F-220 and the angle 06F-160 from the aft side wall assembly 06F-010.

(f) Remove the ground cable from the oxygen container assy 06F-200.

(g) Remove the screws 06F-210, 06F-215, the washers 06F-220 and the oxygen container assy 06F-200 from the angles 06F-190.

(h) Remove the screws 06F-210, the washers 06F-220 and the angles 06F-190 from the aft side wall assembly 06F-010.

(i) Remove the caps 06F-260, the screws 06F-250, 06F-270, the washers 06F-220 and the post assembly 06F-240.

(j) Disassemble the post assembly 06F-240 as follows:

1 Remove the screws 06F-243.

(k) Remove the screws 06F-030 and the fittings 06F-020 from the brackets 06F-013.

(l) Remove the brackets 06F-013, 06F-017 from the aft side wall assembly 06F-010.

SUB TASK 25-41-51-010-026-E01
D2549030504000

3. Removal of the Side Wall (06F-1)

NOTE: **See TABLE 3097 for the references for the replacement procedures of permanent installed parts.**

IPL FIG. ITEM	COMPONENT PART NAME	IPL FIG. ITEM	REPLACEMENT PART NAME	SEE REPAIR TASK
06F-001 06F-240	Side Wall Post Assembly	06F-245	Nut	Replacement of the Riveted Parts

Table 3097
Reference list for the replacement of permanent installed parts

(a) Remove and disassemble the handle assembly 06F-110 as follows:

1 Remove the security pins 06F-130 from the handle assembly 06F-110.

2 Remove the handle assembly 06F-110 from the aft side wall assembly 06F-010.

3 Remove the special screws 06F-120 and the special washers 06F-140 from the aft side wall assembly 06F-010.

(b) Remove the toilet seat cover dispenser 06F-280 from the screws 06F-290.

(c) Remove the screws 06F-290 from the aft side wall assembly 06F-010.

(d) Remove the studs 06F-230 and the washers 06F-220 from the cover oxygen container assy 06F-150.

(e) Remove the screws 06F-170, the nuts 06F-180 and the cover oxygen container assy 06F-150 from the angle 06F-160.

(f) Remove the screws 06F-210, the washers 06F-220 and the angle 06F-160 from the aft side wall assembly 06F-010.

(g) Remove the ground cable from the oxygen container assy 06F-200.

(h) Remove the screws 06F-210, the washers 06F-220 and the oxygen container assy 06F-200 from the angles 06F-190.

(i) Remove the screws 06F-210, the washers 06F-220 and the angles 06F-190 from the aft side wall assembly 06F-010.

(j) Remove the screws 06F-440, 06F-460, the washers 06F-430 and the angle 06F-420 from the lavatory structure.

(k) Remove the caps 06F-260, the screws 06F-250, 06F-270, the washers 06F-220 and the post assembly 06F-240.

(l) Disassemble the post assembly 06F-240 as follows:

1 Remove the screws 06F-243.

(m) Remove the screws 06F-030 and the fittings 06F-020 from the brackets 06F-013.

(n) Remove the brackets 06F-013, 06F-017 from the aft side wall assembly 06F-010.

SUB TASK 25-41-51-010-026-F01
D2549020604200 D2549020607200

4. Removal of the Side Wall (06F-1)

NOTE: **See TABLE 3098 for the references for the replacement procedures of permanent installed parts.**

IPL FIG. ITEM	COMPONENT PART NAME	IPL FIG. ITEM	REPLACEMENT PART NAME	SEE REPAIR TASK
06F-001 06F-240	Side Wall Post Assembly	06F-245	Nut	Replacement of the Riveted Parts

Table 3098
Reference list for the replacement of permanent installed parts

(a) Remove and disassemble the handle assembly 06F-110 as follows:

1 Remove the security pins 06F-130 from the handle assembly 06F-110.

2 Remove the handle assembly 06F-110 from the aft side wall assembly 06F-010.

3 Remove the special screws 06F-120 and the special washers 06F-140 from the aft side wall assembly 06F-010.

(b) Remove the toilet seat cover dispenser 06F-280 from the screws 06F-290.

(c) Remove the screws 06F-290 from the aft side wall assembly 06F-010.

(d) Remove the studs 06F-230 and the washers 06F-220 from the cover oxygen container assy 06F-150.

(e) Remove the screws 06F-170, the nuts 06F-180 and the cover oxygen container assy 06F-150 from the angle 06F-160.

(f) Remove the screws 06F-210, the washers 06F-220 and the angle 06F-160 from the aft side wall assembly 06F-010.

(g) Remove the ground cable from the oxygen container assy 06F-200.

(h) Remove the screws 06F-210, the washers 06F-220 and the oxygen container assy 06F-200 from the angles 06F-190.

(i) Remove the screws 06F-210, the washers 06F-220 and the angles 06F-190 from the aft side wall assembly 06F-010.

(j) Remove the caps 06F-260, the screws 06F-250, 06F-270, the washers 06F-220 and the post assembly 06F-240.

(k) Disassemble the post assembly 06F-240 as follows:

1 Remove the screws 06F-243.

(l) Remove the screws 06F-030 and the fittings 06F-020 from the brackets 06F-013.

(m) Remove the brackets 06F-013, 06F-017 from the aft side wall assembly 06F-010.

SUB TASK 25-41-51-010-026-G01
D2549020605200

5. Removal of the Side Wall (06F-1)

NOTE: **See TABLE 3099 for the references for the replacement procedures of permanent installed parts.**

IPL FIG. ITEM	COMPONENT PART NAME	IPL FIG. ITEM	REPLACEMENT PART NAME	SEE REPAIR TASK
06F-001 06F-240	Side Wall Post Assembly	06F-245	Nut	Replacement of the Riveted Parts

Table 3099
Reference list for the replacement of permanent installed parts

(a) Remove and disassemble the handle assembly 06F-110 as follows:

1 Remove the security pins 06F-130 from the handle assembly 06F-110.

2 Remove the handle assembly 06F-110 from the aft side wall assembly 06F-010.

3 Remove the special screws 06F-120 and the special washers 06F-140 from the aft side wall assembly 06F-010.

(b) Remove the studs 06F-230 and the washers 06F-220 from the cover oxygen container assy 06F-150.

(c) Remove the screws 06F-170, the nuts 06F-180 and the cover oxygen container assy 06F-150 from the angle 06F-160.

(d) Remove the screws 06F-210, the washers 06F-220 and the angle 06F-160 from the aft side wall assembly 06F-010.

(e) Remove the ground cable from the oxygen container assy 06F-200.

(f) Remove the screws 06F-210, the washers 06F-220 and the oxygen container assy 06F-200 from the angles 06F-190.

(g) Remove the screws 06F-210, the washers 06F-220 and the angles 06F-190 from the aft side wall assembly 06F-010.

(h) Remove the caps 06F-260, the screws 06F-250, 06F-270, the washers 06F-220 and the post assembly 06F-240.

(i) Disassemble the post assembly 06F-240 as follows:

1 Remove the screws 06F-243.

(j) Remove the screws 06F-030 and the fittings 06F-020 from the brackets 06F-013.

(k) Remove the brackets 06F-013, 06F-017 from the aft side wall assembly 06F-010.

SUB TASK 25-41-51-010-026-H01
D2549030504600

6. Removal of the Side Wall (06F-1)

NOTE: **See TABLE 3100 for the references for the replacement procedures of permanent installed parts.**

IPL FIG. ITEM	COMPONENT PART NAME	IPL FIG. ITEM	REPLACEMENT PART NAME	SEE REPAIR TASK
06F-001 06F-240	Side Wall Post Assembly	06F-245	Nut	Replacement of the Riveted Parts

Table 3100
Reference list for the replacement of permanent installed parts

(a) Remove and disassemble the handle assembly 06F-110 as follows:

1 Remove the security pins 06F-130 from the handle assembly 06F-110.

2 Remove the handle assembly 06F-110 from the aft side wall assembly 06F-010.

3 Remove the special screws 06F-120 and the special washers 06F-140 from the aft side wall assembly 06F-010.

(b) Remove the studs 06F-230 and the washers 06F-220 from the cover oxygen container assy 06F-150.

(c) Remove the screws 06F-170, the nuts 06F-180 and the cover oxygen container assy 06F-150 from the angle 06F-160.

(d) Remove the screws 06F-210, the washers 06F-220 and the angle 06F-160 from the aft side wall assembly 06F-010.

(e) Remove the ground cable from the oxygen container assy 06F-200.

(f) Remove the screws 06F-210, the washers 06F-220 and the oxygen container assy 06F-200 from the angles 06F-190.

(g) Remove the screws 06F-210, the washers 06F-220 and the angles 06F-190 from the aft side wall assembly 06F-010.

(h) Remove the caps 06F-260, the screws 06F-250, 06F-270, the washers 06F-220 and the post assembly 06F-240.

(i) Disassemble the post assembly 06F-240 as follows:

1 Remove the screws 06F-243.

(j) Remove the screws 06F-030 and the fittings 06F-020 from the brackets 06F-013.

(k) Remove the brackets 06F-013, 06F-017 from the aft side wall assembly 06F-010.

SUB TASK 25-41-51-010-026-J01
D2549010509400 D2549010509600 D2549030505600

7. Removal of the Side Wall (06F-1)

NOTE: **See TABLE 3101 for the references for the replacement procedures of permanent installed parts.**

IPL FIG. ITEM	COMPONENT PART NAME	IPL FIG. ITEM	REPLACEMENT PART NAME	SEE REPAIR TASK
06F-001 06F-240	Side Wall Post Assembly	06F-245	Nut	Replacement of the Riveted Parts

Table 3101
Reference list for the replacement of permanent installed parts

(a) Remove and disassemble the handle assembly 06F-110 as follows:

1 Remove the security pins 06F-130 from the handle assembly 06F-110.

2 Remove the handle assembly 06F-110 from the aft side wall assembly 06F-010.

3 Remove the special screws 06F-120 and the special washers 06F-140 from the aft side wall assembly 06F-010.

(b) Remove the studs 06F-230 and the washers 06F-220 from the cover oxygen container assy 06F-150.

(c) Remove the screws 06F-170, the nuts 06F-180 and the cover oxygen container assy 06F-150 from the angle 06F-160.

(d) Remove the screws 06F-210, the washers 06F-220 and the angle 06F-160 from the aft side wall assembly 06F-010.

(e) Remove the ground cable from the oxygen container assy 06F-200.

(f) Remove the screws 06F-210, the washers 06F-220 and the oxygen container assy 06F-200 from the angles 06F-190.

(g) Remove the screws 06F-210, the washers 06F-220 and the angles 06F-190 from the aft side wall assembly 06F-010.

(h) Remove the caps 06F-260, the screws 06F-250, 06F-270, the washers 06F-220 and the post assembly 06F-240.

(i) Disassemble the post assembly 06F-240 as follows:

1 Remove the screws 06F-243.

(j) Remove the screws 06F-030 and the fittings 06F-020 from the brackets 06F-013.

(k) Remove the brackets 06F-013, 06F-017 from the aft side wall assembly 06F-010.

SUB TASK 25-41-51-010-026-K01
D2549020506200

8. Removal of the Side Wall (06F-1)

NOTE: **See TABLE 3102 for the references for the replacement procedures of permanent installed parts.**

IPL FIG. ITEM	COMPONENT PART NAME	IPL FIG. ITEM	REPLACEMENT PART NAME	SEE REPAIR TASK
06F-001 06F-240	Side Wall Post Assembly	06F-245	Nut	Replacement of the Riveted Parts

Table 3102
Reference list for the replacement of permanent installed parts

(a) Remove and disassemble the handle assembly 06F-110 as follows:

1 Remove the security pins 06F-130 from the handle assembly 06F-110.

2 Remove the handle assembly 06F-110 from the aft side wall assembly 06F-010.

3 Remove the special screws 06F-120 and the special washers 06F-140 from the aft side wall assembly 06F-010.

(b) Remove the studs 06F-230 and the washers 06F-220 from the cover oxygen container assy 06F-150.

(c) Remove the screws 06F-170, the nuts 06F-180 and the cover oxygen container assy 06F-150 from the angle 06F-160.

(d) Remove the screws 06F-210, the washers 06F-220 and the angle 06F-160 from the aft side wall assembly 06F-010.

(e) Remove the ground cable from the oxygen container assy 06F-200.

(f) Remove the screws 06F-210, the washers 06F-220 and the oxygen container assy 06F-200 from the angles 06F-190.

(g) Remove the screws 06F-210, the washers 06F-220 and the angles 06F-190 from the aft side wall assembly 06F-010.

(h) Remove the screws 06F-440, 06F-460, the washers 06F-430 and the angle 06F-420 from the lavatory structure.

(i) Remove the caps 06F-260, the screws 06F-250, 06F-270, the washers 06F-220 and the post assembly 06F-240.

(j) Disassemble the post assembly 06F-240 as follows:

1 Remove the screws 06F-243.

(k) Remove the screws 06F-030 and the fittings 06F-020 from the brackets 06F-013.

(l) Remove the brackets 06F-013, 06F-017 from the aft side wall assembly 06F-010.

SUB TASK 25-41-51-010-026-L01
D2549010510400

9. Removal of the Side Wall (06F-1)

NOTE: **See TABLE 3103 for the references for the replacement procedures of permanent installed parts.**

IPL FIG. ITEM	COMPONENT PART NAME	IPL FIG. ITEM	REPLACEMENT PART NAME	SEE REPAIR TASK
06F-001 06F-240	Side Wall Post Assembly	06F-245	Nut	Replacement of the Riveted Parts

Table 3103
Reference list for the replacement of permanent installed parts

(a) Remove and disassemble the handle assembly 06F-110 as follows:

1 Remove the security pins 06F-130 from the handle assembly 06F-110.

2 Remove the handle assembly 06F-110 from the aft side wall assembly 06F-010.

3 Remove the special screws 06F-120 and the special washers 06F-140 from the aft side wall assembly 06F-010.

(b) Remove the toilet seat cover dispenser 06F-280 from the screws 06F-290.

(c) Remove the screws 06F-290 from the aft side wall assembly 06F-010.

(d) Remove the studs 06F-230 and the washers 06F-220 from the cover oxygen container assy 06F-150.

(e) Remove the screws 06F-170, the nuts 06F-180 and the cover oxygen container assy 06F-150 from the angle 06F-160.

(f) Remove the screws 06F-210, the washers 06F-220 and the angle 06F-160 from the aft side wall assembly 06F-010.

(g) Remove the ground cable from the oxygen container assy 06F-200.

(h) Remove the screws 06F-210, the washers 06F-220 and the oxygen container assy 06F-200 from the angles 06F-190.

(i) Remove the screws 06F-210, the washers 06F-220 and the angles 06F-190 from the aft side wall assembly 06F-010.

(j) Remove the caps 06F-260, the screws 06F-250, 06F-270, the washers 06F-220 and the post assembly 06F-240.

(k) Disassemble the post assembly 06F-240 as follows:

1 Remove the screws 06F-243.

(l) Remove the screws 06F-030 and the fittings 06F-020 from the brackets 06F-013.

(m) Remove the brackets 06F-013, 06F-017 from the aft side wall assembly 06F-010.

TASK 25-41-51-000-804-H01
D2549010509800 D2549010510000 D2549010512000 D2549020604400 D2549020604800 D2549020606800 D2549020607600 D2549020608600 D2549020609000 D2549020609600 D2549020610400 D2549020701200 D2549030505800 D2549030506200 D2549030506800 D2549030507000 R225401172-002

27. Removal of the Side Wall

A. General

A complete disassembly of the component is not necessary and not recommended.

Do not disassemble the component more than it is necessary for:

- Cleaning
- Visual Inspection
- Replacement of defective parts.

B. Job Set-up Information
(1) Consumable Materials

REFERENCE	DESIGNATION
08-007	Sealant, High Temperature

Table 3104
Consumable Materials

(2) Fixtures, Tools, Test and Support Equipment

REFERENCE	DESIGNATION
	hot air blower

Table 3105
Fixtures, Tools, Test and Support Equipment

C. Procedure

WARNING: **BE CAREFUL WHEN YOU USE SOLVENTS/CLEANING AGENTS, SEALANTS AND OTHER MATERIALS. OBEY THE MATERIAL MANUFACTURER'S INSTRUCTIONS AND THE LOCAL REGULATIONS. MAKE SURE THAT THERE IS A GOOD FLOW OF AIR THROUGH THE WORK AREA. DO NOT BREATHE THE FUMES. DO NOT SMOKE. DO NOT USE THESE MATERIALS NEAR A FLAME, SPARKS OR SOURCES OF HEAT. USE PROTECTIVE CLOTHING, GOGGLES AND GLOVES. IF YOU GET ONE OF THESE MATERIALS ON YOUR SKIN OR IN YOUR EYES, FLUSH IT AWAY WITH A FLOW OF CLEAN WATER. IF YOU GET ONE OF THESE MATERIALS IN YOUR MOUTH, GET IMMEDIATE MEDICAL AID. IN GENERAL, THESE MATERIALS ARE POISONOUS, FLAMMABLE AND SKIN IRRITANTS.**

WARNING: **KEEP ALL HYDROCARBONS (FUELS, LUBRICANTS, ETC.) AWAY FROM ALL SOURCES OF OXYGEN. OXYGEN BECOMES EXPLOSIVE WHEN IT TOUCHES HYDROCARBONS.**

WARNING: **TO PREVENT CONTAMINATION OF THE OXYGEN SYSTEM, MAKE SURE THAT YOUR HANDS AND ALL THE TOOLS ARE CLEAN.**

CAUTION: **PUT DRY, CLEAN, METAL OR PLASTIC PLUGS ON ALL PIPES OR UNITS REMOVED TEMPORARILY. PUT EACH PIPE OR UNIT IN A SEALED VINYL BAG. UNWANTED MATERIALS IN THE OXYGEN SYSTEM CAN DAMAGE THE SYSTEM.**

CAUTION: **DO ALL THE WORK ON A CLEAN, SOFT SURFACE TO PREVENT DAMAGE TO THE COMPONENTS.**

SUB TASK 25-41-51-010-027-A01
D2549010509800 D2549010512000

1. Removal of the Side Wall (06G-1)

NOTE: **See TABLE 3106 for the references for the replacement procedures of permanent installed parts.**

IPL FIG. ITEM	COMPONENT PART NAME	IPL FIG. ITEM	REPLACEMENT PART NAME	SEE REPAIR TASK
06G-001 06G-240	Side Wall Post Assembly	06G-245	Nut	Replacement of the Riveted Parts

Table 3106
Reference list for the replacement of permanent installed parts

(a) Remove and disassemble the handle assembly 06G-110 as follows:

1 Remove the security pins 06G-130 from the handle assembly 06G-110.

2 Remove the handle assembly 06G-110 from the aft side wall assembly 06G-010.

3 Remove the special screws 06G-120 and the special washers 06G-140 from the aft side wall assembly 06G-010.

(b) Remove the screws 06G-251, the washers 06G-221 and the support 06G-300 from the aft side wall assembly 06G-010.

(c) Remove the studs 06G-230 and the washers 06G-220 from the cover oxygen container assy 06G-150.

(d) Remove the screws 06G-170, the nuts 06G-180 and the cover oxygen container assy 06G-150 from the angle 06G-160.

(e) Remove the screws 06G-210, the washers 06G-220 and the angle 06G-160 from the aft side wall assembly 06G-010.

(f) Remove the ground cable from the oxygen container assy 06G-200.

(g) Remove the screws 06G-210, the washers 06G-220 and the oxygen container assy 06G-200 from the angles 06G-190.

(h) Remove the screws 06G-210, the washers 06G-220 and the angles 06G-190 from the aft side wall assembly 06G-010.

(i) Remove the caps 06G-260, the screws 06G-250, 06G-270, the washers 06G-220 and the post assembly 06G-240.

(j) Disassemble the post assembly 06G-240 as follows:

1 Remove the screws 06G-243.

(k) Remove the screws 06G-030 and the fittings 06G-020 from the brackets 06G-013.

(l) Remove the brackets 06G-013, 06G-017 from the aft side wall assembly 06G-010.

SUB TASK 25-41-51-010-027-B01
D2549020604400 D2549020608600 D2549020610400 D2549030505800 D2549030506800

2. Removal of the Side Wall (06G-1)

NOTE: **See TABLE 3107 for the references for the replacement procedures of permanent installed parts.**

IPL FIG. ITEM	COMPONENT PART NAME	IPL FIG. ITEM	REPLACEMENT PART NAME	SEE REPAIR TASK
06G-001 06G-240	Side Wall Post Assembly	06G-245	Nut	Replacement of the Riveted Parts

Table 3107
Reference list for the replacement of permanent installed parts

(a) Remove and disassemble the handle assembly 06G-110 as follows:

1 Remove the security pins 06G-130 from the handle assembly 06G-110.

2 Remove the handle assembly 06G-110 from the aft side wall assembly 06G-010.

3 Remove the special screws 06G-120 and the special washers 06G-140 from the aft side wall assembly 06G-010.

(b) Remove the toilet seat cover dispenser 06G-280 from the screws 06G-290.

(c) Remove the screws 06G-290 from the aft side wall assembly 06G-010.

(d) Remove the studs 06G-230 and the washers 06G-220 from the cover oxygen container assy 06G-150.

(e) Remove the screws 06G-170, the nuts 06G-180 and the cover oxygen container assy 06G-150 from the angle 06G-160.

(f) Remove the screws 06G-210, the washers 06G-220 and the angle 06G-160 from the aft side wall assembly 06G-010.

(g) Remove the ground cable from the oxygen container assy 06G-200.

(h) Remove the screws 06G-210, the washers 06G-220 and the oxygen container assy 06G-200 from the angles 06G-190.

(i) Remove the screws 06G-210, the washers 06G-220 and the angles 06G-190 from the aft side wall assembly 06G-010.

(j) Remove the caps 06G-260, the screws 06G-250, 06G-270, the washers 06G-220 and the post assembly 06G-240.

(k) Disassemble the post assembly 06G-240 as follows:

1 Remove the screws 06G-243.

(l) Remove the screws 06G-030 and the fittings 06G-020 from the brackets 06G-013.

(m) Remove the brackets 06G-013, 06G-017 from the aft side wall assembly 06G-010.

SUB TASK 25-41-51-010-027-C01
D2549020701200

3. Removal of the Side Wall (06G-1)

NOTE: **See TABLE 3108 for the references for the replacement procedures of permanent installed parts.**

IPL FIG. ITEM	COMPONENT PART NAME	IPL FIG. ITEM	REPLACEMENT PART NAME	SEE REPAIR TASK
06G-001 06G-240	Side Wall Post Assembly	06G-245	Nut	Replacement of the Riveted Parts

Table 3108
Reference list for the replacement of permanent installed parts

(a) Remove and disassemble the handle assembly 06G-110 as follows:

1 Remove the security pins 06G-130 from the handle assembly 06G-110.

2 Remove the handle assembly 06G-110 from the aft side wall assembly 06G-010.

3 Remove the special screws 06G-120 and the special washers 06G-140 from the aft side wall assembly 06G-010.

(b) Remove the studs 06G-230 and the washers 06G-220 from the cover oxygen container assy 06G-150.

(c) Remove the screws 06G-170, the nuts 06G-180 and the cover oxygen container assy 06G-150 from the angle 06G-160.

(d) Remove the screws 06G-210, the washers 06G-220 and the angle 06G-160 from the aft side wall assembly 06G-010.

(e) Remove the ground cable from the oxygen container assy 06G-200.

(f) Remove the screws 06G-210, the washers 06G-220 and the oxygen container assy 06G-200 from the angles 06G-190.

(g) Remove the screws 06G-210, the washers 06G-220 and the angles 06G-190 from the aft side wall assembly 06G-010.

(h) Remove the screws 06G-440, 06G-460, the washers 06G-430 and the angle 06G-420 from the aft side wall assembly 06G-010.

(i) Remove the screws 06G-400, the nuts 06G-410, the plates 06G-390 and the single door emergency unlocking device assembly 06G-320 from the post assembly 06G-240.

(j) Disassemble the single door emergency unlocking device assembly 06G-320 as follows:

WARNING: BE CAREFUL WHEN YOU USE MATERIAL NO. 08-007 SEALANT, HIGH TEMPERATURE. OBEY THE MATERIAL MANUFACTURER'S INSTRUCTIONS.

1 Remove the bolt 06G-380 and the emergency unlocking-device strike 06G-340 from the emergency unlocking-device housing 06G-330.

NOTE: If necessary use a hot air blower to heat up the Material No. 08-007 Sealant, High Temperature to remove the bolt 06G-380.

WARNING: **BE CAREFUL WHEN YOU USE MATERIAL NO. 08-007 SEALANT, HIGH TEMPERATURE. OBEY THE MATERIAL MANUFACTURER'S INSTRUCTIONS.**

2 Remove the pin 06G-360, the snap catch 06G-370 and the emergency unlocking-device pivot 06G-350 from the emergency unlocking-device housing 06G-330.

NOTE: **If necessary use a hot air blower to heat up the Material No. 08-007 Sealant, High Temperature to remove the snap catch 06G-370 and the pin 06G-360.**

(k) Remove the caps 06G-260, the screws 06G-250, 06G-270, the washers 06G-220 and the post assembly 06G-240.

(l) Disassemble the post assembly 06G-240 as follows:

1 Remove the screws 06G-243.

(m) Remove the screws 06G-030 and the fittings 06G-020 from the brackets 06G-013.

(n) Remove the brackets 06G-013, 06G-017 from the aft side wall assembly 06G-010.

SUB TASK 25-41-51-010-027-D01
D2549020606800 D2549020609600

4. Removal of the Side Wall (06G-1)

NOTE: **See TABLE 3109 for the references for the replacement procedures of permanent installed parts.**

IPL FIG. ITEM	COMPONENT PART NAME	IPL FIG. ITEM	REPLACEMENT PART NAME	SEE REPAIR TASK
06G-001 06G-240	Side Wall Post Assembly	06G-245	Nut	Replacement of the Riveted Parts

Table 3109
Reference list for the replacement of permanent installed parts

(a) Remove and disassemble the handle assembly 06G-110 as follows:

1 Remove the security pins 06G-130 from the handle assembly 06G-110.

2 Remove the handle assembly 06G-110 from the aft side wall assembly 06G-010.

3 Remove the special screws 06G-120 and the special washers 06G-140 from the aft side wall assembly 06G-010.

(b) Remove the studs 06G-230 and the washers 06G-220 from the cover oxygen container assy 06G-150.

(c) Remove the screws 06G-170, the nuts 06G-180 and the cover oxygen container assy 06G-150 from the angle 06G-160.

(d) Remove the screws 06G-210, the washers 06G-220 and the angle 06G-160 from the aft side wall assembly 06G-010.

(e) Remove the ground cable from the oxygen container assy 06G-200.

(f) Remove the screws 06G-210, the washers 06G-220 and the oxygen container assy 06G-200 from the angles 06G-190.

(g) Remove the screws 06G-210, the washers 06G-220 and the angles 06G-190 from the aft side wall assembly 06G-010.

(h) Remove the screws 06G-400, the nuts 06G-410, the plates 06G-390 and the single door emergency unlocking device assembly 06G-320 from the post assembly 06G-240.

(i) Disassemble the single door emergency unlocking device assembly 06G-320 as follows:

WARNING: BE CAREFUL WHEN YOU USE MATERIAL NO. 08-007 SEALANT, HIGH TEMPERATURE. OBEY THE MATERIAL MANUFACTURER'S INSTRUCTIONS.

1 Remove the bolt 06G-380 and the emergency unlocking-device strike 06G-340 from the emergency unlocking-device housing 06G-330.

NOTE: If necessary use a hot air blower to heat up the Material No. 08-007 Sealant, High Temperature to remove the bolt 06G-380.

WARNING: **BE CAREFUL WHEN YOU USE MATERIAL NO. 08-007 SEALANT, HIGH TEMPERATURE. OBEY THE MATERIAL MANUFACTURER'S INSTRUCTIONS.**

2 Remove the pin 06G-360, the snap catch 06G-370 and the emergency unlocking-device pivot 06G-350 from the emergency unlocking-device housing 06G-330.

NOTE: **If necessary use a hot air blower to heat up the Material No. 08-007 Sealant, High Temperature to remove the snap catch 06G-370 and the pin 06G-360.**

(j) Remove the caps 06G-260, the screws 06G-250, 06G-270, the washers 06G-220 and the post assembly 06G-240.

(k) Disassemble the post assembly 06G-240 as follows:

1 Remove the screws 06G-243.

(l) Remove the screws 06G-030 and the fittings 06G-020 from the brackets 06G-013.

(m) Remove the brackets 06G-013, 06G-017 from the aft side wall assembly 06G-010.

SUB TASK 25-41-51-010-027-F01
D2549030507000 R225401172-002

5. Removal of the Side Wall (06G-1)

NOTE: **See TABLE 3110 for the references for the replacement procedures of permanent installed parts.**

IPL FIG. ITEM	COMPONENT PART NAME	IPL FIG. ITEM	REPLACEMENT PART NAME	SEE REPAIR TASK
06G-001 06G-240	Side Wall Post Assembly	06G-245	Nut	Replacement of the Riveted Parts

Table 3110
Reference list for the replacement of permanent installed parts

(a) Remove and disassemble the handle assembly 06G-110 as follows:

1 Remove the security pins 06G-130 from the handle assembly 06G-110.

2 Remove the handle assembly 06G-110 from the aft side wall assembly 06G-010.

3 Remove the special screws 06G-120 and the special washers 06G-140 from the aft side wall assembly 06G-010.

(b) Remove the toilet seat cover dispenser 06G-280 from the screws 06G-290.

(c) Remove the screws 06G-290 from the aft side wall assembly 06G-010.

(d) Remove the studs 06G-230 and the washers 06G-220 from the cover oxygen container assy 06G-150.

(e) Remove the screws 06G-170, the nuts 06G-180 and the cover oxygen container assy 06G-150 from the angle 06G-160.

(f) Remove the screws 06G-210, the washers 06G-220 and the angle 06G-160 from the aft side wall assembly 06G-010.

(g) Remove the ground cable from the oxygen container assy 06G-200.

(h) Remove the screws 06G-210, 06G-212, the washers 06G-220 and the oxygen container assy 06G-200 from the angles 06G-190.

(i) Remove the screws 06G-210, the washers 06G-220 and the angles 06G-190 from the aft side wall assembly 06G-010.

(j) Remove the caps 06G-260, the screws 06G-250, 06G-270, the washers 06G-220 and the post assembly 06G-240.

(k) Disassemble the post assembly 06G-240 as follows:

1 Remove the screws 06G-243.

(l) Remove the screws 06G-030 and the fittings 06G-020 from the brackets 06G-013.

(m) Remove the brackets 06G-013, 06G-017 from the aft side wall assembly 06G-010.

SUB TASK 25-41-51-010-027-G01
D2549010510000

6. Removal of the Side Wall (06G-1)

NOTE: **See TABLE 3111 for the references for the replacement procedures of permanent installed parts.**

IPL FIG. ITEM	COMPONENT PART NAME	IPL FIG. ITEM	REPLACEMENT PART NAME	SEE REPAIR TASK
06G-001 06G-240	Side Wall Post Assembly	06G-245	Nut	Replacement of the Riveted Parts

Table 3111
Reference list for the replacement of permanent installed parts

(a) Remove and disassemble the handle assembly 06G-110 as follows:

1 Remove the security pins 06G-130 from the handle assembly 06G-110.

2 Remove the handle assembly 06G-110 from the aft side wall assembly 06G-010.

3 Remove the special screws 06G-120 and the special washers 06G-140 from the aft side wall assembly 06G-010.

(b) Remove the studs 06G-230 and the washers 06G-220 from the cover oxygen container assy 06G-150.

(c) Remove the screws 06G-170, the nuts 06G-180 and the cover oxygen container assy 06G-150 from the angle 06G-160.

(d) Remove the screws 06G-210, the washers 06G-220 and the angle 06G-160 from the aft side wall assembly 06G-010.

(e) Remove the ground cable from the oxygen container assy 06G-200.

(f) Remove the screws 06G-210, the washers 06G-220 and the oxygen container assy 06G-200 from the angles 06G-190.

(g) Remove the screws 06G-210, the washers 06G-220 and the angles 06G-190 from the aft side wall assembly 06G-010.

(h) Remove the caps 06G-260, the screws 06G-250, 06G-270, the washers 06G-220 and the post assembly 06G-240.

(i) Disassemble the post assembly 06G-240 as follows:

1 Remove the screws 06G-243.

(j) Remove the screws 06G-030 and the fittings 06G-020 from the brackets 06G-013.

(k) Remove the brackets 06G-013, 06G-017 from the aft side wall assembly 06G-010.

SUB TASK 25-41-51-010-027-H01
D2549020607600 D2549020609000 D2549030506200

7. Removal of the Side Wall (06G-1)

NOTE: **See TABLE 3112 for the references for the replacement procedures of permanent installed parts.**

IPL FIG. ITEM	COMPONENT PART NAME	IPL FIG. ITEM	REPLACE-MENT PART NAME	SEE REPAIR TASK
06G-001 06G-240	Side Wall Post Assembly	06G-245	Nut	Replacement of the Riveted Parts

Table 3112
Reference list for the replacement of permanent installed parts

(a) Remove and disassemble the handle assembly 06G-110 as follows:

1 Remove the security pins 06G-130 from the handle assembly 06G-110.

2 Remove the handle assembly 06G-110 from the aft side wall assembly 06G-010.

3 Remove the special screws 06G-120 and the special washers 06G-140 from the aft side wall assembly 06G-010.

(b) Remove the studs 06G-230 and the washers 06G-220 from the cover oxygen container assy 06G-150.

(c) Remove the screws 06G-170, the nuts 06G-180 and the cover oxygen container assy 06G-150 from the angle 06G-160.

(d) Remove the screws 06G-210, the washers 06G-220 and the angle 06G-160 from the aft side wall assembly 06G-010.

(e) Remove the ground cable from the oxygen container assy 06G-200.

(f) Remove the screws 06G-210, the washers 06G-220 and the oxygen container assy 06G-200 from the angles 06G-190.

(g) Remove the screws 06G-210, the washers 06G-220 and the angles 06G-190 from the aft side wall assembly 06G-010.

(h) Remove the caps 06G-260, the screws 06G-250, 06G-270, the washers 06G-220 and the post assembly 06G-240.

(i) Disassemble the post assembly 06G-240 as follows:

1 Remove the screws 06G-243.

(j) Remove the screws 06G-030 and the fittings 06G-020 from the brackets 06G-013.

(k) Remove the brackets 06G-013, 06G-017 from the aft side wall assembly 06G-010.

SUB TASK 25-41-51-010-027-J01
D2549020604800

8. Removal of the Side Wall (06G-1)

NOTE: **See TABLE 3113 for the references for the replacement procedures of permanent installed parts.**

IPL FIG. ITEM	COMPONENT PART NAME	IPL FIG. ITEM	REPLACEMENT PART NAME	SEE REPAIR TASK
06G-001 06G-240	Side Wall Post Assembly	06G-245	Nut	Replacement of the Riveted Parts

Table 3113
Reference list for the replacement of permanent installed parts

(a) Remove and disassemble the handle assembly 06G-110 as follows:

1 Remove the security pins 06G-130 from the handle assembly 06G-110.

2 Remove the handle assembly 06G-110 from the aft side wall assembly 06G-010.

3 Remove the special screws 06G-120 and the special washers 06G-140 from the aft side wall assembly 06G-010.

(b) Remove the studs 06G-230 and the washers 06G-220 from the cover oxygen container assy 06G-150.

(c) Remove the screws 06G-170, the nuts 06G-180 and the cover oxygen container assy 06G-150 from the angle 06G-160.

(d) Remove the screws 06G-210, the washers 06G-220 and the angle 06G-160 from the aft side wall assembly 06G-010.

(e) Remove the ground cable from the oxygen container assy 06G-200.

(f) Remove the screws 06G-210, the washers 06G-220 and the oxygen container assy 06G-200 from the angles 06G-190.

(g) Remove the screws 06G-210, the washers 06G-220 and the angles 06G-190 from the aft side wall assembly 06G-010.

(h) Remove the caps 06G-260, the screws 06G-250, 06G-270, the washers 06G-220 and the post assembly 06G-240.

(i) Disassemble the post assembly 06G-240 as follows:

1 Remove the screws 06G-243.

(j) Remove the screws 06G-030 and the fittings 06G-020 from the brackets 06G-013.

(k) Remove the brackets 06G-013, 06G-017 from the aft side wall assembly 06G-010.

TASK 25-41-51-000-804-J01
D2549010511600 D2549010513400 D2549010513600 D2549020602800 D2549020605000 D2549020605600 D2549020606000 D2549020607400 D2549020608200 D2549020608400 D2549020609400 D2549020610000 D2549020611200 D2549020611800 D2549020709400 D2549030510600 R225401134-000 R225401134-002 R225401134-004 R225401136-016

28. Removal of the Side Wall

A. General

A complete disassembly of the component is not necessary and not recommended.

Do not disassemble the component more than it is necessary for:

- Cleaning
- Visual Inspection
- Replacement of defective parts.

B. Job Set-up Information
(1) Consumable Materials

REFERENCE	DESIGNATION
08-007	Sealant, High Temperature

Table 3114
Consumable Materials

(2) Fixtures, Tools, Test and Support Equipment

REFERENCE	DESIGNATION
	hot air blower

Table 3115
Fixtures, Tools, Test and Support Equipment

C. Procedure

WARNING: **BE CAREFUL WHEN YOU USE SOLVENTS/CLEANING AGENTS, SEALANTS AND OTHER MATERIALS. OBEY THE MATERIAL MANUFACTURER'S INSTRUCTIONS AND THE LOCAL REGULATIONS. MAKE SURE THAT THERE IS A GOOD FLOW OF AIR THROUGH THE WORK AREA. DO NOT BREATHE THE FUMES. DO NOT SMOKE. DO NOT USE THESE MATERIALS NEAR A FLAME, SPARKS OR SOURCES OF HEAT. USE PROTECTIVE CLOTHING, GOGGLES AND GLOVES. IF YOU GET ONE OF THESE MATERIALS ON YOUR SKIN OR IN YOUR EYES, FLUSH IT AWAY WITH A FLOW OF CLEAN WATER. IF YOU GET ONE OF THESE MATERIALS IN YOUR MOUTH, GET IMMEDIATE MEDICAL AID. IN GENERAL, THESE MATERIALS ARE POISONOUS, FLAMMABLE AND SKIN IRRITANTS.**

WARNING: **KEEP ALL HYDROCARBONS (FUELS, LUBRICANTS, ETC.) AWAY FROM ALL SOURCES OF OXYGEN. OXYGEN BECOMES EXPLOSIVE WHEN IT TOUCHES HYDROCARBONS.**

WARNING: **TO PREVENT CONTAMINATION OF THE OXYGEN SYSTEM, MAKE SURE THAT YOUR HANDS AND ALL THE TOOLS ARE CLEAN.**

CAUTION: **PUT DRY, CLEAN, METAL OR PLASTIC PLUGS ON ALL PIPES OR UNITS REMOVED TEMPORARILY. PUT EACH PIPE OR UNIT IN A SEALED VINYL BAG. UNWANTED MATERIALS IN THE OXYGEN SYSTEM CAN DAMAGE THE SYSTEM.**

CAUTION: **DO ALL THE WORK ON A CLEAN, SOFT SURFACE TO PREVENT DAMAGE TO THE COMPONENTS.**

SUB TASK 25-41-51-010-028-A01
D2549020606000

1. Removal of the Side Wall (06H-1)

NOTE: **See TABLE 3116 for the references for the replacement procedures of permanent installed parts.**

IPL FIG. ITEM	COMPONENT PART NAME	IPL FIG. ITEM	REPLACEMENT PART NAME	SEE REPAIR TASK
06H-001 06H-240	Side Wall Post Assembly	06H-245	Nut	Replacement of the Riveted Parts

Table 3116
Reference list for the replacement of permanent installed parts

(a) Remove and disassemble the handle assembly 06H-110 as follows:

1 Remove the security pins 06H-130 from the handle assembly 06H-110.

2 Remove the handle assembly 06H-110 from the aft side wall assembly 06H-010.

3 Remove the special screws 06H-120 and the special washers 06H-140 from the aft side wall assembly 06H-010.

(b) Remove the toilet seat cover dispenser 06H-280 from the screws 06H-290.

(c) Remove the screws 06H-290 from the aft side wall assembly 06H-010.

(d) Remove the studs 06H-230 and the washers 06H-220 from the cover oxygen container assy 06H-150.

(e) Remove the screws 06H-170, the nuts 06H-180 and the cover oxygen container assy 06H-150 from the angle 06H-160.

(f) Remove the screws 06H-210, the washers 06H-220 and the angle 06H-160 from the aft side wall assembly 06H-010.

(g) Remove the ground cable from the oxygen container assy 06H-200.

(h) Remove the screws 06H-210, the washers 06H-220 and the oxygen container assy 06H-200 from the angles 06H-190.

(i) Remove the screws 06H-210, the washers 06H-220 and the angles 06H-190 from the aft side wall assembly 06H-010.

(j) Remove the screws 06H-510, the nuts 06H-520, the plates 06H-500 and the single door emergency unlocking device assembly 06H-430 from the post assembly 06H-240.

(k) Disassemble the single door emergency unlocking device assembly 06H-430 as follows:

WARNING: BE CAREFUL WHEN YOU USE MATERIAL NO. 08-007 SEALANT, HIGH TEMPERATURE. OBEY THE MATERIAL MANUFACTURER'S INSTRUCTIONS.

1 Remove the bolt 06H-490 and the emergency unlocking-device strike 06H-450 from the emergency unlocking-device housing 06H-440.

NOTE: If necessary use a hot air blower to heat up the Material No. 08-007 Sealant, High Temperature to remove the bolt 06H-490.

WARNING: **BE CAREFUL WHEN YOU USE MATERIAL NO. 08-007 SEALANT, HIGH TEMPERATURE. OBEY THE MATERIAL MANUFACTURER'S INSTRUCTIONS.**

2 Remove the pin 06H-470, the snap catch 06H-480 and the emergency unlocking-device pivot 06H-460 from the emergency unlocking-device housing 06H-440.

NOTE: **If necessary use a hot air blower to heat up the Material No. 08-007 Sealant, High Temperature to remove the snap catch 06H-480 and the pin 06H-470.**

(l) Remove the caps 06H-260, the screws 06H-250, 06H-270, the washers 06H-220 and the post assembly 06H-240.

(m) Disassemble the post assembly 06H-240 as follows:

1 Remove the screws 06H-243.

(n) Remove the screws 06H-030 and the fittings 06H-020 from the brackets 06H-013.

(o) Remove the brackets 06H-013, 06H-017 from the aft side wall assembly 06H-010.

SUB TASK 25-41-51-010-028-B01
D2549020709400

2. Removal of the Side Wall (06H-1)

NOTE: **See TABLE 3117 for the references for the replacement procedures of permanent installed parts.**

IPL FIG. ITEM	COMPONENT PART NAME	IPL FIG. ITEM	REPLACEMENT PART NAME	SEE REPAIR TASK
06H-001 06H-240	Side Wall Retainer Space	06H-245	Nut	Replacement of the Riveted Parts

Table 3117
Reference list for the replacement of permanent installed parts

(a) Remove and disassemble the handle assembly 06H-300 as follows:

1 Remove the security pins 06H-320 from the handle assembly 06H-300.

2 Remove the handle assembly 06H-300 from the aft side wall assembly 06H-010.

3 Remove the special screws 06H-310 and the special washers 06H-330 from the aft side wall assembly 06H-010.

(b) Remove the screws 06H-350, the washers 06H-360 and the support 06H-340 from the aft side wall assembly 06H-010.

(c) Remove the toilet seat cover dispenser 06H-280 from the screws 06H-290.

(d) Remove the screws 06H-290 from the aft side wall assembly 06H-010.

(e) Remove the studs 06H-230 and the washers 06H-220 from the cover oxygen container assy 06H-150.

(f) Remove the screws 06H-170, the nuts 06H-180 and the cover oxygen container assy 06H-150 from the angle 06H-160.

(g) Remove the screws 06H-210, the washers 06H-220 and the angle 06H-160 from the aft side wall assembly 06H-010.

(h) Remove the ground cable from the oxygen container assy 06H-200.

(i) Remove the screws 06H-210, the washers 06H-220 and the oxygen container assy 06H-200 from the angles 06H-190.

(j) Remove the screws 06H-210, the washers 06H-220 and the angles 06H-190 from the aft side wall assembly 06H-010.

(k) Remove the screws 06H-510, the nuts 06H-520, the plates 06H-500 and the single door emergency unlocking device assembly 06H-430 from the retainer space 06H-240.

(l) Disassemble the single door emergency unlocking device assembly 06H-430 as follows:

WARNING: **BE CAREFUL WHEN YOU USE MATERIAL NO. 08-007 SEALANT, HIGH TEMPERATURE. OBEY THE MATERIAL MANUFACTURER'S INSTRUCTIONS.**

1 Remove the bolt 06H-490 and the emergency unlocking-device strike 06H-450 from the emergency unlocking-device housing 06H-440.

NOTE: **If necessary use a hot air blower to heat up the Material No. 08-007 Sealant, High Temperature to remove the bolt 06H-490.**

WARNING: **BE CAREFUL WHEN YOU USE MATERIAL NO. 08-007 SEALANT, HIGH TEMPERATURE. OBEY THE MATERIAL MANUFACTURER'S INSTRUCTIONS.**

2 Remove the pin 06H-470, the snap catch 06H-480 and the emergency unlocking-device pivot 06H-460 from the emergency unlocking-device housing 06H-440.

NOTE: **If necessary use a hot air blower to heat up the Material No. 08-007 Sealant, High Temperature to remove the snap catch 06H-480 and the pin 06H-470.**

(m) Remove the caps 06H-260, the screws 06H-250, 06H-270, the washers 06H-220 and the retainer space 06H-240.

(n) Disassemble the retainer space 06H-240 as follows:

1 Remove the screws 06H-243.

(o) Remove the screws 06H-030 and the fittings 06H-020 from the brackets 06H-013.

(p) Remove the brackets 06H-013, 06H-017 from the aft side wall assembly 06H-010.

SUB TASK 25-41-51-010-028-C01
D2549030510600

3. Removal of the Side Wall (06H-1)

NOTE: **See TABLE 3118 for the references for the replacement procedures of permanent installed parts.**

IPL FIG. ITEM	COMPONENT PART NAME	IPL FIG. ITEM	REPLACEMENT PART NAME	SEE REPAIR TASK
06H-001 06H-240	Side Wall Retainer Space	06H-245	Nut	Replacement of the Riveted Parts

Table 3118
Reference list for the replacement of permanent installed parts

(a) Remove and disassemble the handle assembly 06H-300 as follows:

1 Remove the security pins 06H-320 from the handle assembly 06H-300.

2 Remove the handle assembly 06H-300 from the aft side wall assembly 06H-010.

3 Remove the special screws 06H-310 and the special washers 06H-330 from the aft side wall assembly 06H-010.

(b) Remove the screws 06H-350, the washers 06H-360 and the support 06H-340 from the aft side wall assembly 06H-010.

(c) Remove the studs 06H-230 and the washers 06H-220 from the cover oxygen container assy 06H-150.

(d) Remove the screws 06H-170, the nuts 06H-180 and the cover oxygen container assy 06H-150 from the angle 06H-160.

(e) Remove the screws 06H-210, the washers 06H-220 and the angle 06H-160 from the aft side wall assembly 06H-010.

(f) Remove the ground cable from the oxygen container assy 06H-200.

(g) Remove the screws 06H-210, the washers 06H-220 and the oxygen container assy 06H-200 from the angles 06H-190.

(h) Remove the screws 06H-210, the washers 06H-220 and the angles 06H-190 from the aft side wall assembly 06H-010.

(i) Remove the screws 06H-510, the nuts 06H-520, the plates 06H-500 and the single door emergency unlocking device assembly 06H-430 from the retainer space 06H-240.

(j) Disassemble the single door emergency unlocking device assembly 06H-430 as follows:

WARNING: BE CAREFUL WHEN YOU USE MATERIAL NO. 08-007 SEALANT, HIGH TEMPERATURE. OBEY THE MATERIAL MANUFACTURER'S INSTRUCTIONS.

1 Remove the bolt 06H-490 and the emergency unlocking-device strike 06H-450 from the emergency unlocking-device housing 06H-440.

NOTE: If necessary use a hot air blower to heat up the Material No. 08-007 Sealant, High Temperature to remove the bolt 06H-490.

WARNING: BE CAREFUL WHEN YOU USE MATERIAL NO. 08-007 SEALANT, HIGH TEMPERATURE. OBEY THE MATERIAL MANUFACTURER'S INSTRUCTIONS.

2 Remove the pin 06H-470, the snap catch 06H-480 and the emergency unlocking-device pivot 06H-460 from the emergency unlocking-device housing 06H-440.

NOTE: If necessary use a hot air blower to heat up the Material No. 08-007 Sealant, High Temperature to remove the snap catch 06H-480 and the pin 06H-470.

(k) Remove the caps 06H-260, the screws 06H-250, 06H-270, the washers 06H-220 and the retainer space 06H-240.

(l) Disassemble the retainer space 06H-240 as follows:

1 Remove the screws 06H-243.

(m) Remove the screws 06H-030 and the fittings 06H-020 from the brackets 06H-013.

(n) Remove the brackets 06H-013, 06H-017 from the aft side wall assembly 06H-010.

SUB TASK 25-41-51-010-028-D01
D2549020605000 D2549020608400 R225401136-016

4. Removal of the Side Wall (06H-1)

NOTE: **See TABLE 3119 for the references for the replacement procedures of permanent installed parts.**

IPL FIG. ITEM	COMPONENT PART NAME	IPL FIG. ITEM	REPLACEMENT PART NAME	SEE REPAIR TASK
06H-001 06H-240	Side Wall Post Assembly	06H-245	Nut	Replacement of the Riveted Parts

Table 3119
Reference list for the replacement of permanent installed parts

(a) Remove and disassemble the handle assembly 06H-110 as follows:

1 Remove the security pins 06H-130 from the handle assembly 06H-110.

2 Remove the handle assembly 06H-110 from the aft side wall assembly 06H-010.

3 Remove the special screws 06H-120 and the special washers 06H-140 from the aft side wall assembly 06H-010.

(b) Remove and disassemble the handle assembly 06H-380 as follows:

1 Remove the security pins 06H-400 from the handle assembly 06H-380.

2 Remove the handle assembly 06H-380 from the aft side wall assembly 06H-010.

3 Remove the special screws 06H-390 and the special washers 06H-410 from the aft side wall assembly 06H-010.

(c) Remove the studs 06H-230 and the washers 06H-220 from the cover oxygen container assy 06H-150.

(d) Remove the screws 06H-170, the nuts 06H-180 and the cover oxygen container assy 06H-150 from the angle 06H-160.

(e) Remove the screws 06H-210, the washers 06H-220 and the angle 06H-160 from the aft side wall assembly 06H-010.

(f) Remove the ground cable from the oxygen container assy 06H-200.

(g) Remove the screws 06H-210, 06H-215, the washers 06H-220 and the oxygen container assy 06H-200 from the angles 06H-190.

(h) Remove the screws 06H-210, the washers 06H-220 and the angles 06H-190 from the aft side wall assembly 06H-010.

(i) Remove the caps 06H-260, the screws 06H-250, 06H-270, the washers 06H-220 and the post assembly 06H-240.

(j) Disassemble the post assembly 06H-240 as follows:

1 Remove the screws 06H-243.

(k) Remove the screws 06H-030 and the fittings 06H-020 from the brackets 06H-013.

(l) Remove the brackets 06H-013, 06H-017 from the aft side wall assembly 06H-010.

SUB TASK 25-41-51-010-028-E01
D2549010513600

5. Removal of the Side Wall (06H-1)

NOTE: **See TABLE 3120 for the references for the replacement procedures of permanent installed parts.**

IPL FIG. ITEM	COMPONENT PART NAME	IPL FIG. ITEM	REPLACEMENT PART NAME	SEE REPAIR TASK
06H-001 06H-240	Side Wall Post Assembly	06H-245	Nut	Replacement of the Riveted Parts

Table 3120
Reference list for the replacement of permanent installed parts

(a) Remove and disassemble the handle assembly 06H-110 as follows:

1 Remove the security pins 06H-130 from the handle assembly 06H-110.

2 Remove the handle assembly 06H-110 from the aft side wall assembly 06H-010.

3 Remove the special screws 06H-120 and the special washers 06H-140 from the aft side wall assembly 06H-010.

(b) Remove and disassemble the handle assembly 06H-380 as follows:

1 Remove the security pins 06H-400 from the handle assembly 06H-380.

2 Remove the handle assembly 06H-380 from the aft side wall assembly 06H-010.

3 Remove the special screws 06H-390 and the special washers 06H-410 from the aft side wall assembly 06H-010.

(c) Remove the toilet seat cover dispenser 06H-280 from the screws 06H-290.

(d) Remove the screws 06H-290 from the aft side wall assembly 06H-010.

(e) Remove the studs 06H-230 and the washers 06H-220 from the cover oxygen container assy 06H-150.

(f) Remove the screws 06H-170, the nuts 06H-180 and the cover oxygen container assy 06H-150 from the angle 06H-160.

(g) Remove the screws 06H-210, the washers 06H-220 and the angle 06H-160 from the aft side wall assembly 06H-010.

(h) Remove the ground cable from the oxygen container assy 06H-200.

(i) Remove the screws 06H-210, the washers 06H-220 and the oxygen container assy 06H-200 from the angles 06H-190.

(j) Remove the screws 06H-210, the washers 06H-220 and the angles 06H-190 from the aft side wall assembly 06H-010.

(k) Remove the caps 06H-260, the screws 06H-250, 06H-270, the washers 06H-220 and the post assembly 06H-240.

(l) Disassemble the post assembly 06H-240 as follows:

1 Remove the screws 06H-243.

(m) Remove the screws 06H-030 and the fittings 06H-020 from the brackets 06H-013.

(n) Remove the brackets 06H-013, 06H-017 from the aft side wall assembly 06H-010.

SUB TASK 25-41-51-010-028-F01
D2549020610000

6. Removal of the Side Wall (06H-1)

NOTE: **See TABLE 3121 for the references for the replacement procedures of permanent installed parts.**

IPL FIG. ITEM	COMPONENT PART NAME	IPL FIG. ITEM	REPLACEMENT PART NAME	SEE REPAIR TASK
06H-001 06H-240	Side Wall Post Assembly	06H-245	Nut	Replacement of the Riveted Parts

Table 3121
Reference list for the replacement of permanent installed parts

(a) Remove and disassemble the handle assembly 06H-300 as follows:

1 Remove the security pins 06H-320 from the handle assembly 06H-300.

2 Remove the handle assembly 06H-300 from the aft side wall assembly 06H-010.

3 Remove the special screws 06H-310 and the special washers 06H-330 from the aft side wall assembly 06H-010.

(b) Remove the screws 06H-350, the washers 06H-360 and the support 06H-340 from the aft side wall assembly 06H-010.

(c) Remove the studs 06H-230 and the washers 06H-220 from the cover oxygen container assy 06H-150.

(d) Remove the screws 06H-170, the nuts 06H-180 and the cover oxygen container assy 06H-150 from the angle 06H-160.

(e) Remove the screws 06H-210, the washers 06H-220 and the angle 06H-160 from the aft side wall assembly 06H-010.

(f) Remove the ground cable from the oxygen container assy 06H-200.

(g) Remove the screws 06H-210, the washers 06H-220 and the oxygen container assy 06H-200 from the angles 06H-190.

(h) Remove the screws 06H-210, the washers 06H-220 and the angles 06H-190 from the aft side wall assembly 06H-010.

(i) Remove the caps 06H-260, the screws 06H-250, 06H-270, the washers 06H-220 and the post assembly 06H-240.

(j) Disassemble the post assembly 06H-240 as follows:

1 Remove the screws 06H-243.

(k) Remove the screws 06H-030 and the fittings 06H-020 from the brackets 06H-013.

(l) Remove the brackets 06H-013, 06H-017 from the aft side wall assembly 06H-010.

SUB TASK 25-41-51-010-028-G01
D2549020602800 D2549020605600 D2549020608200 R225401134-000 R225401134-002 R225401134-004

7. Removal of the Side Wall (06H-1)

NOTE: **See TABLE 3122 for the references for the replacement procedures of permanent installed parts.**

IPL FIG. ITEM	COMPONENT PART NAME	IPL FIG. ITEM	REPLACEMENT PART NAME	SEE REPAIR TASK
06H-001 06H-240	Side Wall Post Assembly	06H-245	Nut	Replacement of the Riveted Parts

Table 3122
Reference list for the replacement of permanent installed parts

(a) Remove and disassemble the handle assembly 06H-300 as follows:

1 Remove the security pins 06H-320 from the handle assembly 06H-300.

2 Remove the handle assembly 06H-300 from the aft side wall assembly 06H-010.

3 Remove the special screws 06H-310 and the special washers 06H-330 from the aft side wall assembly 06H-010.

(b) Remove the screws 06H-350, the washers 06H-360 and the support 06H-340 from the aft side wall assembly 06H-010.

(c) Remove the toilet seat cover dispenser 06H-280 from the screws 06H-290.

(d) Remove the screws 06H-290 from the aft side wall assembly 06H-010.

(e) Remove the studs 06H-230 and the washers 06H-220 from the cover oxygen container assy 06H-150.

(f) Remove the screws 06H-170, the nuts 06H-180 and the cover oxygen container assy 06H-150 from the angle 06H-160.

(g) Remove the screws 06H-210, the washers 06H-220 and the angle 06H-160 from the aft side wall assembly 06H-010.

(h) Remove the ground cable from the oxygen container assy 06H-200.

(i) Remove the screws 06H-210, 06H-215, the washers 06H-220 and the oxygen container assy 06H-200 from the angles 06H-190.

(j) Remove the screws 06H-210, the washers 06H-220 and the angles 06H-190 from the aft side wall assembly 06H-010.

(k) Remove the caps 06H-260, the screws 06H-250, 06H-270, the washers 06H-220 and the post assembly 06H-240.

(l) Disassemble the post assembly 06H-240 as follows:

1 Remove the screws 06H-243.

(m) Remove the screws 06H-030 and the fittings 06H-020 from the brackets 06H-013.

(n) Remove the brackets 06H-013, 06H-017 from the aft side wall assembly 06H-010.

SUB TASK 25-41-51-010-028-H01
D2549010513400 D2549020609400

8. Removal of the Side Wall (06H-1)

NOTE: **See TABLE 3123 for the references for the replacement procedures of permanent installed parts.**

IPL FIG. ITEM	COMPONENT PART NAME	IPL FIG. ITEM	REPLACEMENT PART NAME	SEE REPAIR TASK
06H-001 06H-240	Side Wall Post Assembly	06H-245	Nut	Replacement of the Riveted Parts

Table 3123
Reference list for the replacement of permanent installed parts

(a) Remove and disassemble the handle assembly 06H-300 as follows:

1 Remove the security pins 06H-320 from the handle assembly 06H-300.

2 Remove the handle assembly 06H-300 from the aft side wall assembly 06H-010.

3 Remove the special screws 06H-310 and the special washers 06H-330 from the aft side wall assembly 06H-010.

(b) Remove the toilet seat cover dispenser 06H-280 from the screws 06H-290.

(c) Remove the screws 06H-290 from the aft side wall assembly 06H-010.

(d) Remove the studs 06H-230 and the washers 06H-220 from the cover oxygen container assy 06H-150.

(e) Remove the screws 06H-170, the nuts 06H-180 and the cover oxygen container assy 06H-150 from the angle 06H-160.

(f) Remove the screws 06H-210, the washers 06H-220 and the angle 06H-160 from the aft side wall assembly 06H-010.

(g) Remove the ground cable from the oxygen container assy 06H-200.

(h) Remove the screws 06H-210, the washers 06H-220 and the oxygen container assy 06H-200 from the angles 06H-190.

(i) Remove the screws 06H-210, the washers 06H-220 and the angles 06H-190 from the aft side wall assembly 06H-010.

(j) Remove the caps 06H-260, the screws 06H-250, 06H-270, the washers 06H-220 and the post assembly 06H-240.

(k) Disassemble the post assembly 06H-240 as follows:

1 Remove the screws 06H-243.

(l) Remove the screws 06H-030 and the fittings 06H-020 from the brackets 06H-013.

(m) Remove the brackets 06H-013, 06H-017 from the aft side wall assembly 06H-010.

SUB TASK 25-41-51-010-028-J01
D2549020607400

9. Removal of the Side Wall (06H-1)

NOTE: **See TABLE 3124 for the references for the replacement procedures of permanent installed parts.**

IPL FIG. ITEM	COMPONENT PART NAME	IPL FIG. ITEM	REPLACEMENT PART NAME	SEE REPAIR TASK
06H-001 06H-240	Side Wall Post Assembly	06H-245	Nut	Replacement of the Riveted Parts

Table 3124
Reference list for the replacement of permanent installed parts

(a) Remove and disassemble the handle assembly 06H-300 as follows:

1 Remove the security pins 06H-320 from the handle assembly 06H-300.

2 Remove the handle assembly 06H-300 from the aft side wall assembly 06H-010.

3 Remove the special screws 06H-310 and the special washers 06H-330 from the aft side wall assembly 06H-010.

(b) Remove the studs 06H-230 and the washers 06H-220 from the cover oxygen container assy 06H-150.

(c) Remove the screws 06H-170, the nuts 06H-180 and the cover oxygen container assy 06H-150 from the angle 06H-160.

(d) Remove the screws 06H-210, the washers 06H-220 and the angle 06H-160 from the aft side wall assembly 06H-010.

(e) Remove the ground cable from the oxygen container assy 06H-200.

(f) Remove the screws 06H-210, the washers 06H-220 and the oxygen container assy 06H-200 from the angles 06H-190.

(g) Remove the screws 06H-210, the washers 06H-220 and the angles 06H-190 from the aft side wall assembly 06H-010.

(h) Remove the caps 06H-260, the screws 06H-250, 06H-270, the washers 06H-220 and the post assembly 06H-240.

(i) Disassemble the post assembly 06H-240 as follows:

1 Remove the screws 06H-243.

(j) Remove the screws 06H-030 and the fittings 06H-020 from the brackets 06H-013.

(k) Remove the brackets 06H-013, 06H-017 from the aft side wall assembly 06H-010.

SUB TASK 25-41-51-010-028-K01
D2549020611800

10. Removal of the Side Wall (06H-1)

NOTE: **See TABLE 3125 for the references for the replacement procedures of permanent installed parts.**

IPL FIG. ITEM	COMPONENT PART NAME	IPL FIG. ITEM	REPLACEMENT PART NAME	SEE REPAIR TASK
06H-001 06H-240	Side Wall Post Assembly	06H-245	Nut	Replacement of the Riveted Parts

Table 3125
Reference list for the replacement of permanent installed parts

(a) Remove and disassemble the handle assembly 06H-110 as follows:

1 Remove the security pins 06H-130 from the handle assembly 06H-110.

2 Remove the handle assembly 06H-110 from the aft side wall assembly 06H-010.

3 Remove the special screws 06H-120 and the special washers 06H-140 from the aft side wall assembly 06H-010.

(b) Remove the toilet seat cover dispenser 06H-280 from the screws 06H-290.

(c) Remove the screws 06H-290 from the aft side wall assembly 06H-010.

(d) Remove the studs 06H-230 and the washers 06H-220 from the cover oxygen container assy 06H-150.

(e) Remove the screws 06H-170, the nuts 06H-180 and the cover oxygen container assy 06H-150 from the angle 06H-160.

(f) Remove the screws 06H-210, the washers 06H-220 and the angle 06H-160 from the aft side wall assembly 06H-010.

(g) Remove the ground cable from the oxygen container assy 06H-200.

(h) Remove the screws 06H-210, the washers 06H-220 and the oxygen container assy 06H-200 from the angles 06H-190.

(i) Remove the screws 06H-210, the washers 06H-220 and the angles 06H-190 from the aft side wall assembly 06H-010.

(j) Remove the caps 06H-260, the screws 06H-250, 06H-270, the washers 06H-220 and the post assembly 06H-240.

(k) Disassemble the post assembly 06H-240 as follows:

1 Remove the screws 06H-243.

(l) Remove the screws 06H-030 and the fittings 06H-020 from the brackets 06H-013.

(m) Remove the brackets 06H-013, 06H-017 from the aft side wall assembly 06H-010.

SUB TASK 25-41-51-010-028-L01
D2549010511600 D2549020611200

11. Removal of the Side Wall (06H-1)

NOTE: **See TABLE 3126 for the references for the replacement procedures of permanent installed parts.**

IPL FIG. ITEM	COMPONENT PART NAME	IPL FIG. ITEM	REPLACEMENT PART NAME	SEE REPAIR TASK
06H-001 06H-240	Side Wall Post Assembly	06H-245	Nut	Replacement of the Riveted Parts

Table 3126
Reference list for the replacement of permanent installed parts

(a) Remove and disassemble the handle assembly 06H-110 as follows:

1 Remove the security pins 06H-130 from the handle assembly 06H-110.

2 Remove the handle assembly 06H-110 from the aft side wall assembly 06H-010.

3 Remove the special screws 06H-120 and the special washers 06H-140 from the aft side wall assembly 06H-010.

(b) Remove the toilet seat cover dispenser 06H-280 from the screws 06H-290.

(c) Remove the screws 06H-290 from the aft side wall assembly 06H-010.

(d) Remove the studs 06H-230 and the washers 06H-220 from the cover oxygen container assy 06H-150.

(e) Remove the screws 06H-170, the nuts 06H-180 and the cover oxygen container assy 06H-150 from the angle 06H-160.

(f) Remove the screws 06H-210, the washers 06H-220 and the angle 06H-160 from the aft side wall assembly 06H-010.

(g) Remove the ground cable from the oxygen container assy 06H-200.

(h) Remove the screws 06H-210, the washers 06H-220 and the oxygen container assy 06H-200 from the angles 06H-190.

(i) Remove the screws 06H-210, the washers 06H-220 and the angles 06H-190 from the aft side wall assembly 06H-010.

(j) Remove the caps 06H-260, the screws 06H-250, 06H-270, the washers 06H-220 and the post assembly 06H-240.

(k) Disassemble the post assembly 06H-240 as follows:

1 Remove the screws 06H-243.

(l) Remove the screws 06H-030 and the fittings 06H-020 from the brackets 06H-013.

(m) Remove the brackets 06H-013, 06H-017 from the aft side wall assembly 06H-010.

TASK 25-41-51-000-804-K01
D2549010511800 D2549010512400 D2549010513000 D2549010513800 D2549020506400 D2549020607800 D2549020609800 D2549020610200 D2549020611000 D2549020611400 D2549020611600 D2549030506400 D2549030506600 D2549030507200 R225401137-002 R225401175-000 R225401176-000

29. Removal of the Side Wall

A. General

A complete disassembly of the component is not necessary and not recommended.

Do not disassemble the component more than it is necessary for:

- Cleaning
- Visual Inspection
- Replacement of defective parts.

B. Job Set-up Information
(1) Consumable Materials

REFERENCE	DESIGNATION
08-007	Sealant, High Temperature

Table 3127
Consumable Materials

(2) Fixtures, Tools, Test and Support Equipment

REFERENCE	DESIGNATION
	hot air blower

Table 3128
Fixtures, Tools, Test and Support Equipment

C. Procedure

WARNING: **BE CAREFUL WHEN YOU USE SOLVENTS/CLEANING AGENTS, SEALANTS AND OTHER MATERIALS. OBEY THE MATERIAL MANUFACTURER'S INSTRUCTIONS AND THE LOCAL REGULATIONS. MAKE SURE THAT THERE IS A GOOD FLOW OF AIR THROUGH THE WORK AREA. DO NOT BREATHE THE FUMES. DO NOT SMOKE. DO NOT USE THESE MATERIALS NEAR A FLAME, SPARKS OR SOURCES OF HEAT. USE PROTECTIVE CLOTHING, GOGGLES AND GLOVES. IF YOU GET ONE OF THESE MATERIALS ON YOUR SKIN OR IN YOUR EYES, FLUSH IT AWAY WITH A FLOW OF CLEAN WATER. IF YOU GET ONE OF THESE MATERIALS IN YOUR MOUTH, GET IMMEDIATE MEDICAL AID. IN GENERAL, THESE MATERIALS ARE POISONOUS, FLAMMABLE AND SKIN IRRITANTS.**

WARNING: **KEEP ALL HYDROCARBONS (FUELS, LUBRICANTS, ETC.) AWAY FROM ALL SOURCES OF OXYGEN. OXYGEN BECOMES EXPLOSIVE WHEN IT TOUCHES HYDROCARBONS.**

WARNING: **TO PREVENT CONTAMINATION OF THE OXYGEN SYSTEM, MAKE SURE THAT YOUR HANDS AND ALL THE TOOLS ARE CLEAN.**

CAUTION: **PUT DRY, CLEAN, METAL OR PLASTIC PLUGS ON ALL PIPES OR UNITS REMOVED TEMPORARILY. PUT EACH PIPE OR UNIT IN A SEALED VINYL BAG. UNWANTED MATERIALS IN THE OXYGEN SYSTEM CAN DAMAGE THE SYSTEM.**

CAUTION: **DO ALL THE WORK ON A CLEAN, SOFT SURFACE TO PREVENT DAMAGE TO THE COMPONENTS.**

SUB TASK 25-41-51-010-029-A01
D2549020611600

1. Removal of the Side Wall (06J-1)

NOTE: **See TABLE 3129 for the references for the replacement procedures of permanent installed parts.**

IPL FIG. ITEM	COMPONENT PART NAME	IPL FIG. ITEM	REPLACEMENT PART NAME	SEE REPAIR TASK
06J-001 06J-250	Side Wall Post Assembly	06J-270	Nut	Replacement of the Riveted Parts

Table 3129
Reference list for the replacement of permanent installed parts

(a) Remove and disassemble the handle assembly 06J-120 as follows:

1 Remove the security pins 06J-140 from the handle assembly 06J-120.

2 Remove the handle assembly 06J-120 from the aft side wall assembly 06J-010.

3 Remove the special screws 06J-130 and the special washers 06J-150 from the aft side wall assembly 06J-010.

(b) Remove the toilet seat cover dispenser 06J-310 from the screws 06J-320.

(c) Remove the screws 06J-320 from the aft side wall assembly 06J-010.

(d) Remove the screw 06J-380 and the coat hook 06J-370.

(e) Remove the studs 06J-240 and the washers 06J-230 from the cover oxygen container assy 06J-160.

(f) Remove the screws 06J-180, the nuts 06J-190 and the cover oxygen container assy 06J-160 from the angle 06J-170.

(g) Remove the screws 06J-220, the washers 06J-230 and the angle 06J-170 from the aft side wall assembly 06J-010.

(h) Remove the ground cable from the oxygen container assy 06J-210.

(i) Remove the screws 06J-220, the washers 06J-230 and the oxygen container assy 06J-210 from the angles 06J-200.

(j) Remove the screws 06J-220, the washers 06J-230 and the angles 06J-200 from the aft side wall assembly 06J-010.

(k) Remove the screws 06J-490, 06J-500, the washers 06J-231 and the angle 06J-480 from the aft side wall assembly 06J-010.

(l) Remove the screws 06J-590, the nuts 06J-600, the plates 06J-580 and the single door emergency unlocking device assembly 06J-510 from the post assembly 06J-250.

(m) Disassemble the single door emergency unlocking device assembly 06J-510 as follows:

WARNING: **BE CAREFUL WHEN YOU USE MATERIAL NO. 08-007 SEALANT, HIGH TEMPERATURE. OBEY THE MATERIAL MANUFACTURER'S INSTRUCTIONS.**

1 Remove the bolt 06J-570 and the emergency unlocking-device strike 06J-530 from the emergency unlocking-device housing 06J-520.

NOTE: **If necessary use a hot air blower to heat up the Material No. 08-007 Sealant, High Temperature to remove the bolt 06J-570.**

WARNING: **BE CAREFUL WHEN YOU USE MATERIAL NO. 08-007 SEALANT, HIGH TEMPERATURE. OBEY THE MATERIAL MANUFACTURER'S INSTRUCTIONS.**

2 Remove the pin 06J-550, the snap catch 06J-560 and the emergency unlocking-device pivot 06J-540 from the emergency unlocking-device housing 06J-520.

NOTE: **If necessary use a hot air blower to heat up the Material No. 08-007 Sealant, High Temperature to remove the snap catch 06J-560 and the pin 06J-550.**

(n) Remove the caps 06J-290, the screws 06J-280, the washers 06J-230 and the post assembly 06J-250.

(o) Disassemble the post assembly 06J-250 as follows:

1 Remove the screws 06J-260.

(p) Remove the screws 06J-031, 06J-035 and the fittings 06J-021, 06J-025 from the aft side wall assembly 06J-010.

SUB TASK 25-41-51-010-029-B01
D2549020610200

2. Removal of the Side Wall (06J-1)

NOTE: **See TABLE 3130 for the references for the replacement procedures of permanent installed parts.**

IPL FIG. ITEM	COMPONENT PART NAME	IPL FIG. ITEM	REPLACEMENT PART NAME	SEE REPAIR TASK
06J-001 06J-250	Side Wall Post Assembly	06J-270	Nut	Replacement of the Riveted Parts

Table 3130
Reference list for the replacement of permanent installed parts

(a) Remove and disassemble the handle assembly 06J-120 as follows:

1 Remove the security pins 06J-140 from the handle assembly 06J-120.

2 Remove the handle assembly 06J-120 from the aft side wall assembly 06J-010.

3 Remove the special screws 06J-130 and the special washers 06J-150 from the aft side wall assembly 06J-010.

(b) Remove and disassemble the handle assembly 06J-390 as follows:

1 Remove the security pins 06J-410 from the handle assembly 06J-390.

2 Remove the handle assembly 06J-390 from the aft side wall assembly 06J-010.

3 Remove the special screws 06J-400 and the special washers 06J-420 from the aft side wall assembly 06J-010.

(c) Remove the studs 06J-240 and the washers 06J-230 from the cover oxygen container assy 06J-160.

(d) Remove the screws 06J-180, the nuts 06J-190 and the cover oxygen container assy 06J-160 from the angle 06J-170.

(e) Remove the screws 06J-220, the washers 06J-230 and the angle 06J-170 from the aft side wall assembly 06J-010.

(f) Remove the ground cable from the oxygen container assy 06J-210.

(g) Remove the screws 06J-220, the washers 06J-230 and the oxygen container assy 06J-210 from the angles 06J-200.

(h) Remove the screws 06J-220, the washers 06J-230 and the angles 06J-200 from the aft side wall assembly 06J-010.

(i) Remove the caps 06J-290, the screws 06J-280, the washers 06J-230 and the post assembly 06J-250.

(j) Disassemble the post assembly 06J-250 as follows:

1 Remove the screws 06J-260.

(k) Remove the screws 06J-030 and the fittings 06J-020 from the brackets 06J-013.

(l) Remove the brackets 06J-013, 06J-017 from the aft side wall assembly 06J-010.

SUB TASK 25-41-51-010-029-C01
D2549010511800

3. Removal of the Side Wall (06J-1)

NOTE: **See TABLE 3131 for the references for the replacement procedures of permanent installed parts.**

IPL FIG. ITEM	COMPONENT PART NAME	IPL FIG. ITEM	REPLACEMENT PART NAME	SEE REPAIR TASK
06J-001 06J-250	Side Wall Post Assembly	06J-270	Nut	Replacement of the Riveted Parts

Table 3131
Reference list for the replacement of permanent installed parts

(a) Remove and disassemble the handle assembly 06J-120 as follows:

1 Remove the security pins 06J-140 from the handle assembly 06J-120.

2 Remove the handle assembly 06J-120 from the aft side wall assembly 06J-010.

3 Remove the special screws 06J-130 and the special washers 06J-150 from the aft side wall assembly 06J-010.

(b) Remove the screws 06J-440, the washers 06J-450 and the support 06J-430 from the aft side wall assembly 06J-010.

(c) Remove the studs 06J-240 and the washers 06J-230 from the cover oxygen container assy 06J-160.

(d) Remove the screws 06J-180, the nuts 06J-190 and the cover oxygen container assy 06J-160 from the angle 06J-170.

(e) Remove the screws 06J-220, the washers 06J-230 and the angle 06J-170 from the aft side wall assembly 06J-010.

(f) Remove the ground cable from the oxygen container assy 06J-210.

(g) Remove the screws 06J-220, the washers 06J-230 and the oxygen container assy 06J-210 from the angles 06J-200.

(h) Remove the screws 06J-220, the washers 06J-230 and the angles 06J-200 from the aft side wall assembly 06J-010.

(i) Remove the caps 06J-290, the screws 06J-280, the washers 06J-230 and the post assembly 06J-250.

(j) Disassemble the post assembly 06J-250 as follows:

1 Remove the screws 06J-260.

(k) Remove the screws 06J-030 and the fittings 06J-020 from the brackets 06J-013.

(l) Remove the brackets 06J-013, 06J-017 from the aft side wall assembly 06J-010.

SUB TASK 25-41-51-010-029-D01
D2549010513800 R225401175-000

4. Removal of the Side Wall (06J-1)

NOTE: **See TABLE 3132 for the references for the replacement procedures of permanent installed parts.**

IPL FIG. ITEM	COMPONENT PART NAME	IPL FIG. ITEM	REPLACEMENT PART NAME	SEE REPAIR TASK
06J-001 06J-250	Side Wall Post Assembly	06J-270	Nut	Replacement of the Riveted Parts

Table 3132
Reference list for the replacement of permanent installed parts

(a) Remove and disassemble the handle assembly 06J-120 as follows:

1 Remove the security pins 06J-140 from the handle assembly 06J-120.

2 Remove the handle assembly 06J-120 from the aft side wall assembly 06J-010.

3 Remove the special screws 06J-130 and the special washers 06J-150 from the aft side wall assembly 06J-010.

(b) Remove the screws 06J-440, the washers 06J-450 and the support 06J-430 from the aft side wall assembly 06J-010.

(c) Remove the toilet seat cover dispenser 06J-310 from the screws 06J-320.

(d) Remove the screws 06J-320 from the aft side wall assembly 06J-010.

(e) Remove the studs 06J-240 and the washers 06J-230 from the cover oxygen container assy 06J-160.

(f) Remove the screws 06J-180, the nuts 06J-190 and the cover oxygen container assy 06J-160 from the angle 06J-170.

(g) Remove the screws 06J-220, the washers 06J-230 and the angle 06J-170 from the aft side wall assembly 06J-010.

(h) Remove the ground cable from the oxygen container assy 06J-210.

(i) Remove the screws 06J-220, the washers 06J-230 and the oxygen container assy 06J-210 from the angles 06J-200.

(j) Remove the screws 06J-220, the washers 06J-230 and the angles 06J-200 from the aft side wall assembly 06J-010.

(k) Remove the caps 06J-290, the screws 06J-280, the washers 06J-230 and the post assembly 06J-250.

(l) Disassemble the post assembly 06J-250 as follows:

1 Remove the screws 06J-260.

(m) Remove the screws 06J-030 and the fittings 06J-020 from the brackets 06J-013.

(n) Remove the brackets 06J-013, 06J-017 from the aft side wall assembly 06J-010.

(o) Remove the plugs 06J-045.

SUB TASK 25-41-51-010-029-E01
D2549030506400 D2549030506600 R225401137-002

5. Removal of the Side Wall (06J-1)

NOTE: **See TABLE 3133 for the references for the replacement procedures of permanent installed parts.**

IPL FIG. ITEM	COMPONENT PART NAME	IPL FIG. ITEM	REPLACEMENT PART NAME	SEE REPAIR TASK
06J-001 06J-250	Side Wall Post Assembly	06J-270	Nut	Replacement of the Riveted Parts

Table 3133
Reference list for the replacement of permanent installed parts

(a) Remove and disassemble the handle assembly 06J-120 as follows:

1 Remove the security pins 06J-140 from the handle assembly 06J-120.

2 Remove the handle assembly 06J-120 from the aft side wall assembly 06J-010.

3 Remove the special screws 06J-130 and the special washers 06J-150 from the aft side wall assembly 06J-010.

(b) Remove the toilet seat cover dispenser 06J-310 from the screws 06J-320.

(c) Remove the screws 06J-320 from the aft side wall assembly 06J-010.

(d) Remove the studs 06J-240 and the washers 06J-230 from the cover oxygen container assy 06J-160.

(e) Remove the screws 06J-180, the nuts 06J-190 and the cover oxygen container assy 06J-160 from the angle 06J-170.

(f) Remove the screws 06J-220, the washers 06J-230 and the angle 06J-170 from the aft side wall assembly 06J-010.

(g) Remove the ground cable from the oxygen container assy 06J-210.

(h) Remove the screws 06J-220, the washers 06J-230 and the oxygen container assy 06J-210 from the angles 06J-200.

(i) Remove the screws 06J-220, the washers 06J-230 and the angles 06J-200 from the aft side wall assembly 06J-010.

(j) Remove the caps 06J-290, the screws 06J-280, the washers 06J-230 and the post assembly 06J-250.

(k) Disassemble the post assembly 06J-250 as follows:

1 Remove the screws 06J-260.

(l) Remove the screws 06J-030 and the fittings 06J-020 from the brackets 06J-013.

(m) Remove the brackets 06J-013, 06J-017 from the aft side wall assembly 06J-010.

SUB TASK 25-41-51-010-029-F01
D2549010513000

6. Removal of the Side Wall (06J-1)

NOTE: **See TABLE 3134 for the references for the replacement procedures of permanent installed parts.**

IPL FIG. ITEM	COMPONENT PART NAME	IPL FIG. ITEM	REPLACEMENT PART NAME	SEE REPAIR TASK
06J-001 06J-250	Side Wall Post Assembly	06J-270	Nut	Replacement of the Riveted Parts

Table 3134
Reference list for the replacement of permanent installed parts

(a) Remove and disassemble the handle assembly 06J-120 as follows:

1 Remove the security pins 06J-140 from the handle assembly 06J-120.

2 Remove the handle assembly 06J-120 from the aft side wall assembly 06J-010.

3 Remove the special screws 06J-130 and the special washers 06J-150 from the aft side wall assembly 06J-010.

(b) Remove the toilet seat cover dispenser 06J-310 from the screws 06J-320.

(c) Remove the screws 06J-320 from the aft side wall assembly 06J-010.

(d) Remove the studs 06J-240 and the washers 06J-230 from the cover oxygen container assy 06J-160.

(e) Remove the screws 06J-180, the nuts 06J-190 and the cover oxygen container assy 06J-160 from the angle 06J-170.

(f) Remove the screws 06J-220, the washers 06J-230 and the angle 06J-170 from the aft side wall assembly 06J-010.

(g) Remove the ground cable from the oxygen container assy 06J-210.

(h) Remove the screws 06J-220, the washers 06J-230 and the oxygen container assy 06J-210 from the angles 06J-200.

(i) Remove the screws 06J-220, the washers 06J-230 and the angles 06J-200 from the aft side wall assembly 06J-010.

(j) Remove the caps 06J-290, the screws 06J-280, the washers 06J-230 and the post assembly 06J-250.

(k) Disassemble the post assembly 06J-250 as follows:

1 Remove the screws 06J-260.

(l) Remove the screws 06J-030 and the fittings 06J-020 from the brackets 06J-013.

(m) Remove the brackets 06J-013, 06J-017 from the aft side wall assembly 06J-010.

SUB TASK 25-41-51-010-029-G01
D2549010512400 D2549020506400 D2549020607800 D2549020609800 D2549020611000 D2549020611400 D2549030507200 R225401176-000

7. Removal of the Side Wall (06J-1)

NOTE: **See TABLE 3135 for the references for the replacement procedures of permanent installed parts.**

IPL FIG. ITEM	COMPONENT PART NAME	IPL FIG. ITEM	REPLACEMENT PART NAME	SEE REPAIR TASK
06J-001 06J-250	Side Wall Post Assembly	06J-270	Nut	Replacement of the Riveted Parts

Table 3135
Reference list for the replacement of permanent installed parts

(a) Remove and disassemble the handle assembly 06J-120 as follows:

1 Remove the security pins 06J-140 from the handle assembly 06J-120.

2 Remove the handle assembly 06J-120 from the aft side wall assembly 06J-010.

3 Remove the special screws 06J-130 and the special washers 06J-150 from the aft side wall assembly 06J-010.

(b) Remove the studs 06J-240 and the washers 06J-230 from the cover oxygen container assy 06J-160.

(c) Remove the screws 06J-180, the nuts 06J-190 and the cover oxygen container assy 06J-160 from the angle 06J-170.

(d) Remove the screws 06J-220, the washers 06J-230 and the angle 06J-170 from the aft side wall assembly 06J-010.

(e) Remove the ground cable from the oxygen container assy 06J-210.

(f) Remove the screws 06J-220, 06J-225, the washers 06J-230 and the oxygen container assy 06J-210 from the angles 06J-200.

(g) Remove the screws 06J-220, the washers 06J-230 and the angles 06J-200 from the aft side wall assembly 06J-010.

(h) Remove the caps 06J-290, the screws 06J-280, the washers 06J-230 and the post assembly 06J-250.

(i) Disassemble the post assembly 06J-250 as follows:

1 Remove the screws 06J-260.

(j) Remove the screws 06J-030 and the fittings 06J-020 from the brackets 06J-013.

(k) Remove the brackets 06J-013, 06J-017 from the aft side wall assembly 06J-010.

TASK 25-41-51-000-804-L01

D2549010510600 D2549010512200 D2549010514000 D2549010606000 D2549020508200 D2549020508400 D2549020512800 D2549020604600 D2549020605400 D2549020610800 D2549020612000 D2549020613600 D2549020614800 D2549020702800 D2549020703600 D2549020703800 D2549020704600 D2549020705600 D2549020706800 D2549020709200 D2549020711200 D2549020712200 D2549030504200 D2549030507800 D2549030508200 D2549030508400 D2549030509400 D2549030510000 D2549030602800 D2549030604800 D2549030607000 D2549030610600 R225401134-006 R225401134-008 R225401134-010 R225401134-016 R225401134-020 R225401134-022 R225401134-024 R225401134-026 R225401172-004

30. Removal of the Side Wall

A. General

A complete disassembly of the component is not necessary and not recommended.

Do not disassemble the component more than it is necessary for:

- Cleaning
- Visual Inspection
- Replacement of defective parts.

B. Job Set-up Information

(1) Consumable Materials

REFERENCE	DESIGNATION
08-007	Sealant, High Temperature

Table 3136
Consumable Materials

(2) Fixtures, Tools, Test and Support Equipment

REFERENCE	DESIGNATION
	hot air blower

Table 3137
Fixtures, Tools, Test and Support Equipment

C. Procedure

WARNING: **BE CAREFUL WHEN YOU USE SOLVENTS/CLEANING AGENTS, SEALANTS AND OTHER MATERIALS. OBEY THE MATERIAL MANUFACTURER'S INSTRUCTIONS AND THE LOCAL REGULATIONS. MAKE SURE THAT THERE IS A GOOD FLOW OF AIR THROUGH THE WORK AREA. DO NOT BREATHE THE FUMES. DO NOT SMOKE. DO NOT USE THESE MATERIALS NEAR A FLAME, SPARKS OR SOURCES OF HEAT. USE PROTECTIVE CLOTHING, GOGGLES AND GLOVES. IF YOU GET ONE OF THESE MATERIALS ON YOUR SKIN OR IN YOUR EYES, FLUSH IT AWAY WITH A FLOW OF CLEAN WATER. IF YOU GET ONE OF THESE MATERIALS IN YOUR MOUTH, GET IMMEDIATE MEDICAL AID. IN GENERAL, THESE MATERIALS ARE POISONOUS, FLAMMABLE AND SKIN IRRITANTS.**

WARNING: **KEEP ALL HYDROCARBONS (FUELS, LUBRICANTS, ETC.) AWAY FROM ALL SOURCES OF OXYGEN. OXYGEN BECOMES EXPLOSIVE WHEN IT TOUCHES HYDROCARBONS.**

WARNING: **TO PREVENT CONTAMINATION OF THE OXYGEN SYSTEM, MAKE SURE THAT YOUR HANDS AND ALL THE TOOLS ARE CLEAN.**

CAUTION: **PUT DRY, CLEAN, METAL OR PLASTIC PLUGS ON ALL PIPES OR UNITS REMOVED TEMPORARILY. PUT EACH PIPE OR UNIT IN A SEALED VINYL BAG. UNWANTED MATERIALS IN THE OXYGEN SYSTEM CAN DAMAGE THE SYSTEM.**

CAUTION: **DO ALL THE WORK ON A CLEAN, SOFT SURFACE TO PREVENT DAMAGE TO THE COMPONENTS.**

SUB TASK 25-41-51-010-030-A01
D2549020614800 D2549020705600 D2549020709200

1. Removal of the Side Wall (06K-1)

NOTE: **See TABLE 3138 for the references for the replacement procedures of permanent installed parts.**

IPL FIG. ITEM	COMPONENT PART NAME	IPL FIG. ITEM	REPLACEMENT PART NAME	SEE REPAIR TASK
06K-001 06K-250	Side Wall Post Assembly	06K-255	Nut	Replacement of the Riveted Parts

Table 3138
Reference list for the replacement of permanent installed parts

(a) Remove and disassemble the handle assembly 06K-120 as follows:

1 Remove the security pins 06K-140 from the handle assembly 06K-120.

2 Remove the handle assembly 06K-120 from the aft side wall assembly 06K-010.

3 Remove the special screws 06K-130 and the special washers 06K-150 from the aft side wall assembly 06K-010.

(b) Remove the screws 06K-261, the washers 06K-231 and the support 06K-350 from the aft side wall assembly 06K-010.

(c) Remove the studs 06K-240 and the washers 06K-230 from the cover oxygen container assy 06K-160.

(d) Remove the screws 06K-180, the nuts 06K-190 and the cover oxygen container assy 06K-160 from the angle 06K-170.

(e) Remove the screws 06K-220, the washers 06K-230 and the angle 06K-170 from the aft side wall assembly 06K-010.

(f) Remove the ground cable from the oxygen container assy 06K-210.

(g) Remove the screws 06K-220, the washers 06K-230 and the oxygen container assy 06K-210 from the angles 06K-200.

(h) Remove the screws 06K-220, the washers 06K-230 and the angles 06K-200 from the aft side wall assembly 06K-010.

(i) Remove the screws 06K-460, the nuts 06K-470, the plates 06K-450 and the single door emergency unlocking device assembly 06K-380 from the post assembly 06K-250.

(j) Disassemble the single door emergency unlocking device assembly 06K-380 as follows:

WARNING: BE CAREFUL WHEN YOU USE MATERIAL NO. 08-007 SEALANT, HIGH TEMPERATURE. OBEY THE MATERIAL MANUFACTURER'S INSTRUCTIONS.

1 Remove the bolt 06K-440 and the emergency unlocking-device strike 06K-400 from the emergency unlocking-device housing 06K-390.

NOTE: If necessary use a hot air blower to heat up the Material No. 08-007 Sealant, High Temperature to remove the bolt 06K-440.

WARNING: **BE CAREFUL WHEN YOU USE MATERIAL NO. 08-007 SEALANT, HIGH TEMPERATURE. OBEY THE MATERIAL MANUFACTURER'S INSTRUCTIONS.**

2 Remove the pin 06K-420, the snap catch 06K-430 and the emergency unlocking-device pivot 06K-410 from the emergency unlocking-device housing 06K-390.

NOTE: **If necessary use a hot air blower to heat up the Material No. 08-007 Sealant, High Temperature to remove the snap catch 06K-430 and the pin 06K-420.**

(k) Remove the caps 06K-270, the screws 06K-260, 06K-280, the washers 06K-230 and the post assembly 06K-250.

(l) Disassemble the post assembly 06K-250 as follows:

1 Remove the screws 06K-253.

(m) Remove the screws 06K-030 and the fittings 06K-020 from the brackets 06K-013.

(n) Remove the brackets 06K-013, 06K-017 from the aft side wall assembly 06K-010.

SUB TASK 25-41-51-010-030-B01

D2549020508200 D2549020512800 D2549020613600 D2549030507800 D2549030509400 D2549030602800 D2549030604800 D2549030607000 D2549030610600 R225401134-006 R225401134-008 R225401134-010 R225401134-016 R225401134-020 R225401134-022 R225401134-024 R225401134-026

2. Removal of the Side Wall (06K-1)

NOTE: **See TABLE 3139 for the references for the replacement procedures of permanent installed parts.**

IPL FIG. ITEM	COMPONENT PART NAME	IPL FIG. ITEM	REPLACEMENT PART NAME	SEE REPAIR TASK
06K-001 06K-250	Side Wall Post Assembly	06K-255	Nut	Replacement of the Riveted Parts

Table 3139
Reference list for the replacement of permanent installed parts

(a) Remove and disassemble the handle assembly 06K-120 as follows:

1 Remove the security pins 06K-140 from the handle assembly 06K-120.

2 Remove the handle assembly 06K-120 from the aft side wall assembly 06K-010.

3 Remove the special screws 06K-130 and the special washers 06K-150 from the aft side wall assembly 06K-010.

(b) Remove the screws 06K-261, the washers 06K-231 and the support 06K-350 from the aft side wall assembly 06K-010.

(c) Remove the toilet seat cover dispenser 06K-290 from the screws 06K-300.

(d) Remove the screws 06K-300 from the aft side wall assembly 06K-010.

(e) Remove the studs 06K-240 and the washers 06K-230 from the cover oxygen container assy 06K-160.

(f) Remove the screws 06K-180, the nuts 06K-190 and the cover oxygen container assy 06K-160 from the angle 06K-170.

(g) Remove the screws 06K-220, the washers 06K-230 and the angle 06K-170 from the aft side wall assembly 06K-010.

(h) Remove the ground cable from the oxygen container assy 06K-210.

(i) Remove the screws 06K-220, 06K-222, the washers 06K-230 and the oxygen container assy 06K-210 from the angles 06K-200.

(j) Remove the screws 06K-220, the washers 06K-230 and the angles 06K-200 from the aft side wall assembly 06K-010.

(k) Remove the caps 06K-270, the screws 06K-260, 06K-280, the washers 06K-230 and the post assembly 06K-250.

(l) Disassemble the post assembly 06K-250 as follows:

1 Remove the screws 06K-253.

(m) Remove the screws 06K-030 and the fittings 06K-020 from the brackets 06K-013.

(n) Remove the brackets 06K-013, 06K-017 from the aft side wall assembly 06K-010.

SUB TASK 25-41-51-010-030-C01
D2549030504200

3. Removal of the Side Wall (06K-1)

NOTE: **See TABLE 3140 for the references for the replacement procedures of permanent installed parts.**

IPL FIG. ITEM	COMPONENT PART NAME	IPL FIG. ITEM	REPLACEMENT PART NAME	SEE REPAIR TASK
06K-001 06K-250	Side Wall Post Assembly	06K-255	Nut	Replacement of the Riveted Parts

Table 3140
Reference list for the replacement of permanent installed parts

(a) Remove and disassemble the handle assembly 06K-120 as follows:

1 Remove the security pins 06K-140 from the handle assembly 06K-120.

2 Remove the handle assembly 06K-120 from the aft side wall assembly 06K-010.

3 Remove the special screws 06K-130 and the special washers 06K-150 from the aft side wall assembly 06K-010.

(b) Remove the screws 06K-261, the washers 06K-231 and the support 06K-350 from the aft side wall assembly 06K-010.

(c) Remove the studs 06K-240 and the washers 06K-230 from the cover oxygen container assy 06K-160.

(d) Remove the screws 06K-180, the nuts 06K-190 and the cover oxygen container assy 06K-160 from the angle 06K-170.

(e) Remove the screws 06K-220, the washers 06K-230 and the angle 06K-170 from the aft side wall assembly 06K-010.

(f) Remove the ground cable from the oxygen container assy 06K-210.

(g) Remove the screws 06K-220, the washers 06K-230 and the oxygen container assy 06K-210 from the angles 06K-200.

(h) Remove the screws 06K-220, the washers 06K-230 and the angles 06K-200 from the aft side wall assembly 06K-010.

(i) Remove the caps 06K-270, the screws 06K-260, 06K-280, the washers 06K-230 and the post assembly 06K-250.

(j) Disassemble the post assembly 06K-250 as follows:

1 Remove the screws 06K-253.

(k) Remove the screws 06K-030 and the fittings 06K-020 from the brackets 06K-013.

(l) Remove the brackets 06K-013, 06K-017 from the aft side wall assembly 06K-010.

SUB TASK 25-41-51-010-030-D01
D2549010606000 D2549020508400 D2549020703600 D2549020703800 D2549020706800 D2549020711200 D2549020712200

4. Removal of the Side Wall (06K-1)

NOTE: **See TABLE 3141 for the references for the replacement procedures of permanent installed parts.**

IPL FIG. ITEM	COMPONENT PART NAME	IPL FIG. ITEM	REPLACEMENT PART NAME	SEE REPAIR TASK
06K-001 06K-250	Side Wall Post Assembly	06K-255	Nut	Replacement of the Riveted Parts

Table 3141
Reference list for the replacement of permanent installed parts

(a) Remove and disassemble the handle assembly 06K-120 as follows:

1 Remove the security pins 06K-140 from the handle assembly 06K-120.

2 Remove the handle assembly 06K-120 from the aft side wall assembly 06K-010.

3 Remove the special screws 06K-130 and the special washers 06K-150 from the aft side wall assembly 06K-010.

(b) Remove the screws 06K-261, the washers 06K-231 and the support 06K-350 from the aft side wall assembly 06K-010.

(c) Remove the studs 06K-240 and the washers 06K-230 from the cover oxygen container assy 06K-160.

(d) Remove the screws 06K-180, the nuts 06K-190 and the cover oxygen container assy 06K-160 from the angle 06K-170.

(e) Remove the screws 06K-220, the washers 06K-230 and the angle 06K-170 from the aft side wall assembly 06K-010.

(f) Remove the ground cable from the oxygen container assy 06K-210.

(g) Remove the screws 06K-220, the washers 06K-230 and the oxygen container assy 06K-210 from the angles 06K-200.

(h) Remove the screws 06K-220, the washers 06K-230 and the angles 06K-200 from the aft side wall assembly 06K-010.

(i) Remove the caps 06K-270, the screws 06K-260, 06K-280, the washers 06K-230 and the post assembly 06K-250.

(j) Disassemble the post assembly 06K-250 as follows:

1 Remove the screws 06K-253.

(k) Remove the screws 06K-030 and the fittings 06K-020 from the brackets 06K-013.

(l) Remove the brackets 06K-013, 06K-017 from the aft side wall assembly 06K-010.

SUB TASK 25-41-51-010-030-E01
D2549020605400

5. Removal of the Side Wall (06K-1)

NOTE: **See TABLE 3142 for the references for the replacement procedures of permanent installed parts.**

IPL FIG. ITEM	COMPONENT PART NAME	IPL FIG. ITEM	REPLACEMENT PART NAME	SEE REPAIR TASK
06K-001 06K-250	Side Wall Post Assembly	06K-255	Nut	Replacement of the Riveted Parts

Table 3142
Reference list for the replacement of permanent installed parts

(a) Remove and disassemble the handle assembly 06K-120 as follows:

1 Remove the security pins 06K-140 from the handle assembly 06K-120.

2 Remove the handle assembly 06K-120 from the aft side wall assembly 06K-010.

3 Remove the special screws 06K-130 and the special washers 06K-150 from the aft side wall assembly 06K-010.

(b) Remove the toilet seat cover dispenser 06K-290 from the screws 06K-300.

(c) Remove the screws 06K-300 from the aft side wall assembly 06K-010.

(d) Remove the studs 06K-240 and the washers 06K-230 from the cover oxygen container assy 06K-160.

(e) Remove the screws 06K-180, the nuts 06K-190 and the cover oxygen container assy 06K-160 from the angle 06K-170.

(f) Remove the screws 06K-220, the washers 06K-230 and the angle 06K-170 from the aft side wall assembly 06K-010.

(g) Remove the ground cable from the oxygen container assy 06K-210.

(h) Remove the screws 06K-220, the washers 06K-230 and the oxygen container assy 06K-210 from the angles 06K-200.

(i) Remove the screws 06K-220, the washers 06K-230 and the angles 06K-200 from the aft side wall assembly 06K-010.

(j) Remove the caps 06K-270, the screws 06K-260, 06K-280, the washers 06K-230 and the post assembly 06K-250.

(k) Disassemble the post assembly 06K-250 as follows:

1 Remove the screws 06K-253.

(l) Remove the screws 06K-030 and the fittings 06K-020 from the brackets 06K-013.

(m) Remove the brackets 06K-013, 06K-017 from the aft side wall assembly 06K-010.

SUB TASK 25-41-51-010-030-F01
D2549020604600

6. Removal of the Side Wall (06K-1)

NOTE: **See TABLE 3143 for the references for the replacement procedures of permanent installed parts.**

IPL FIG. ITEM	COMPONENT PART NAME	IPL FIG. ITEM	REPLACEMENT PART NAME	SEE REPAIR TASK
06K-001 06K-250	Side Wall Post Assembly	06K-255	Nut	Replacement of the Riveted Parts

Table 3143
Reference list for the replacement of permanent installed parts

(a) Remove and disassemble the handle assembly 06K-120 as follows:

1 Remove the security pins 06K-140 from the handle assembly 06K-120.

2 Remove the handle assembly 06K-120 from the aft side wall assembly 06K-010.

3 Remove the special screws 06K-130 and the special washers 06K-150 from the aft side wall assembly 06K-010.

(b) Remove the toilet seat cover dispenser 06K-290 from the screws 06K-300.

(c) Remove the screws 06K-300 from the aft side wall assembly 06K-010.

(d) Remove the studs 06K-240 and the washers 06K-230 from the cover oxygen container assy 06K-160.

(e) Remove the screws 06K-180, the nuts 06K-190 and the cover oxygen container assy 06K-160 from the angle 06K-170.

(f) Remove the screws 06K-220, the washers 06K-230 and the angle 06K-170 from the aft side wall assembly 06K-010.

(g) Remove the ground cable from the oxygen container assy 06K-210.

(h) Remove the screws 06K-220, the washers 06K-230 and the oxygen container assy 06K-210 from the angles 06K-200.

(i) Remove the screws 06K-220, the washers 06K-230 and the angles 06K-200 from the aft side wall assembly 06K-010.

(j) Remove the caps 06K-270, the screws 06K-260, 06K-280, the washers 06K-230 and the post assembly 06K-250.

(k) Disassemble the post assembly 06K-250 as follows:

1 Remove the screws 06K-253.

(l) Remove the screws 06K-030 and the fittings 06K-020 from the brackets 06K-013.

(m) Remove the brackets 06K-013, 06K-017 from the aft side wall assembly 06K-010.

SUB TASK 25-41-51-010-030-G01
D2549030508200 R225401172-004

7. Removal of the Side Wall (06K-1)

NOTE: **See TABLE 3144 for the references for the replacement procedures of permanent installed parts.**

IPL FIG. ITEM	COMPONENT PART NAME	IPL FIG. ITEM	REPLACEMENT PART NAME	SEE REPAIR TASK
06K-001 06K-250	Side Wall Post Assembly	06K-255	Nut	Replacement of the Riveted Parts

Table 3144
Reference list for the replacement of permanent installed parts

(a) Remove and disassemble the handle assembly 06K-120 as follows:

1 Remove the security pins 06K-140 from the handle assembly 06K-120.

2 Remove the handle assembly 06K-120 from the aft side wall assembly 06K-010.

3 Remove the special screws 06K-130 and the special washers 06K-150 from the aft side wall assembly 06K-010.

(b) Remove and disassemble the handle assembly 06K-310 as follows:

1 Remove the security pins 06K-330 from the handle assembly 06K-310.

2 Remove the handle assembly 06K-310 from the aft side wall assembly 06K-010.

3 Remove the special screws 06K-320 and the special washers 06K-340 from the aft side wall assembly 06K-010.

(c) Remove the toilet seat cover dispenser 06K-290 from the screws 06K-300.

(d) Remove the screws 06K-300 from the aft side wall assembly 06K-010.

(e) Remove the studs 06K-240 and the washers 06K-230 from the cover oxygen container assy 06K-160.

(f) Remove the screws 06K-180, the nuts 06K-190 and the cover oxygen container assy 06K-160 from the angle 06K-170.

(g) Remove the screws 06K-220, the washers 06K-230 and the angle 06K-170 from the aft side wall assembly 06K-010.

(h) Remove the ground cable from the oxygen container assy 06K-210.

(i) Remove the screws 06K-220, 06K-222, the washers 06K-230 and the oxygen container assy 06K-210 from the angles 06K-200.

(j) Remove the screws 06K-220, the washers 06K-230 and the angles 06K-200 from the aft side wall assembly 06K-010.

(k) Remove the caps 06K-270, the screws 06K-260, 06K-280, the washers 06K-230 and the post assembly 06K-250.

(l) Disassemble the post assembly 06K-250 as follows:

1 Remove the screws 06K-253.

(m) Remove the screws 06K-030 and the fittings 06K-020 from the brackets 06K-013.

(n) Remove the brackets 06K-013, 06K-017 from the aft side wall assembly 06K-010.

SUB TASK 25-41-51-010-030-H01
D2549010510600 D2549010512200 D2549010514000 D2549020612000
D2549020702800 D2549020704600 D2549030508400 D2549030510000

8. Removal of the Side Wall (06K-1)

NOTE: **See TABLE 3145 for the references for the replacement procedures of permanent installed parts.**

IPL FIG. ITEM	COMPONENT PART NAME	IPL FIG. ITEM	REPLACEMENT PART NAME	SEE REPAIR TASK
06K-001 06K-250	Side Wall Post Assembly	06K-255	Nut	Replacement of the Riveted Parts

Table 3145
Reference list for the replacement of permanent installed parts

(a) Remove and disassemble the handle assembly 06K-120 as follows:

1 Remove the security pins 06K-140 from the handle assembly 06K-120.

2 Remove the handle assembly 06K-120 from the aft side wall assembly 06K-010.

3 Remove the special screws 06K-130 and the special washers 06K-150 from the aft side wall assembly 06K-010.

(b) Remove and disassemble the handle assembly 06K-310 as follows:

1 Remove the security pins 06K-330 from the handle assembly 06K-310.

2 Remove the handle assembly 06K-310 from the aft side wall assembly 06K-010.

3 Remove the special screws 06K-320 and the special washers 06K-340 from the aft side wall assembly 06K-010.

(c) Remove the studs 06K-240 and the washers 06K-230 from the cover oxygen container assy 06K-160.

(d) Remove the screws 06K-180, the nuts 06K-190 and the cover oxygen container assy 06K-160 from the angle 06K-170.

(e) Remove the screws 06K-220, the washers 06K-230 and the angle 06K-170 from the aft side wall assembly 06K-010.

(f) Remove the ground cable from the oxygen container assy 06K-210.

(g) Remove the screws 06K-220, the washers 06K-230 and the oxygen container assy 06K-210 from the angles 06K-200.

(h) Remove the screws 06K-220, the washers 06K-230 and the angles 06K-200 from the aft side wall assembly 06K-010.

(i) Remove the caps 06K-270, the screws 06K-260, 06K-280, the washers 06K-230 and the post assembly 06K-250.

(j) Disassemble the post assembly 06K-250 as follows:

1 Remove the screws 06K-253.

(k) Remove the screws 06K-030 and the fittings 06K-020 from the brackets 06K-013.

(l) Remove the brackets 06K-013, 06K-017 from the aft side wall assembly 06K-010.

SUB TASK 25-41-51-010-030-J01
D2549020610800

9. Removal of the Side Wall (06K-1)

NOTE: **See TABLE 3146 for the references for the replacement procedures of permanent installed parts.**

IPL FIG. ITEM	COMPONENT PART NAME	IPL FIG. ITEM	REPLACEMENT PART NAME	SEE REPAIR TASK
06K-001 06K-250	Side Wall Post Assembly	06K-255	Nut	Replacement of the Riveted Parts

Table 3146
Reference list for the replacement of permanent installed parts

(a) Remove and disassemble the handle assembly 06K-120 as follows:

1 Remove the security pins 06K-140 from the handle assembly 06K-120.

2 Remove the handle assembly 06K-120 from the aft side wall assembly 06K-010.

3 Remove the special screws 06K-130 and the special washers 06K-150 from the aft side wall assembly 06K-010.

(b) Remove the toilet seat cover dispenser 06K-290 from the screws 06K-300.

(c) Remove the screws 06K-300 from the aft side wall assembly 06K-010.

(d) Remove the studs 06K-240 and the washers 06K-230 from the cover oxygen container assy 06K-160.

(e) Remove the screws 06K-180, the nuts 06K-190 and the cover oxygen container assy 06K-160 from the angle 06K-170.

(f) Remove the screws 06K-220, the washers 06K-230 and the angle 06K-170 from the aft side wall assembly 06K-010.

(g) Remove the ground cable from the oxygen container assy 06K-210.

(h) Remove the screws 06K-220, the washers 06K-230 and the oxygen container assy 06K-210 from the angles 06K-200.

(i) Remove the screws 06K-220, the washers 06K-230 and the angles 06K-200 from the aft side wall assembly 06K-010.

(j) Remove the screws 06K-500, 06K-510, the washers 06K-490 and the angle 06K-480 from the aft side wall assembly 06K-010.

(k) Remove the caps 06K-270, the screws 06K-260, 06K-280, the washers 06K-230 and the post assembly 06K-250.

(l) Disassemble the post assembly 06K-250 as follows:

1 Remove the screws 06K-253.

(m) Remove the screws 06K-030 and the fittings 06K-020 from the brackets 06K-013.

(n) Remove the brackets 06K-013, 06K-017 from the aft side wall assembly 06K-010.

TASK 25-41-51-000-804-M01

D2549010514400 D2549010600000 D2549010600200 D2549010600400 D2549020506600 D2549020506800 D2549020514000 D2549020612200 D2549020612600 D2549020614400 D2549020614600 D2549020700000 D2549020700800 D2549020701800 D2549020704000 D2549020705400 D2549020707000 D2549020707400 D2549020708000 D2549020709600 D2549020711000 D2549030507600 D2549030508600 D2549030508800 D2549030509600 D2549030514000 D2549030514400 D2549030601200 D2549030602600 D2549030603400 D2549030605200 D2549030605400 D2549030607600 D2549030611400 R225401175-002

31. Removal of the Side Wall

A. General

A complete disassembly of the component is not necessary and not recommended.

Do not disassemble the component more than it is necessary for:

- Cleaning
- Visual Inspection
- Replacement of defective parts.

B. Job Set-up Information

(1) Not applicable

C. Procedure

WARNING: **BE CAREFUL WHEN YOU USE SOLVENTS/CLEANING AGENTS, SEALANTS AND OTHER MATERIALS. OBEY THE MATERIAL MANUFACTURER'S INSTRUCTIONS AND THE LOCAL REGULATIONS. MAKE SURE THAT THERE IS A GOOD FLOW OF AIR THROUGH THE WORK AREA. DO NOT BREATHE THE FUMES. DO NOT SMOKE. DO NOT USE THESE MATERIALS NEAR A FLAME, SPARKS OR SOURCES OF HEAT. USE PROTECTIVE CLOTHING, GOGGLES AND GLOVES. IF YOU GET ONE OF THESE MATERIALS ON YOUR SKIN OR IN YOUR EYES, FLUSH IT AWAY WITH A FLOW OF CLEAN WATER. IF YOU GET ONE OF THESE MATERIALS IN YOUR MOUTH, GET IMMEDIATE MEDICAL AID. IN GENERAL, THESE MATERIALS ARE POISONOUS, FLAMMABLE AND SKIN IRRITANTS.**

WARNING: **KEEP ALL HYDROCARBONS (FUELS, LUBRICANTS, ETC.) AWAY FROM ALL SOURCES OF OXYGEN. OXYGEN BECOMES EXPLOSIVE WHEN IT TOUCHES HYDROCARBONS.**

WARNING: **TO PREVENT CONTAMINATION OF THE OXYGEN SYSTEM, MAKE SURE THAT YOUR HANDS AND ALL THE TOOLS ARE CLEAN.**

CAUTION: **PUT DRY, CLEAN, METAL OR PLASTIC PLUGS ON ALL PIPES OR UNITS REMOVED TEMPORARILY. PUT EACH PIPE OR UNIT IN A SEALED VINYL BAG. UNWANTED MATERIALS IN THE OXYGEN SYSTEM CAN DAMAGE THE SYSTEM.**

CAUTION: **DO ALL THE WORK ON A CLEAN, SOFT SURFACE TO PREVENT DAMAGE TO THE COMPONENTS.**

SUB TASK 25-41-51-010-031-A01
D2549020612600

1. Removal of the Side Wall (06L-1)

NOTE: **See TABLE 3147 for the references for the replacement procedures of permanent installed parts.**

IPL FIG. ITEM	COMPONENT PART NAME	IPL FIG. ITEM	REPLACEMENT PART NAME	SEE REPAIR TASK
06L-001 06L-250	Side Wall Post Assembly	06L-270	Nut	Replacement of the Riveted Parts

Table 3147
Reference list for the replacement of permanent installed parts

(a) Remove and disassemble the handle assembly 06L-120 as follows:

1 Remove the security pins 06L-140 from the handle assembly 06L-120.

2 Remove the handle assembly 06L-120 from the aft side wall assembly 06L-010.

3 Remove the special screws 06L-130 and the special washers 06L-150 from the aft side wall assembly 06L-010.

(b) Remove the screws 06L-281, the washers 06L-231 and the support 06L-310 from the aft side wall assembly 06L-010.

(c) Remove the toilet seat cover dispenser 06L-320 from the screws 06L-330.

(d) Remove the screws 06L-330 from the aft side wall assembly 06L-010.

(e) Remove the screw 06L-390 and the coat hook 06L-380.

(f) Remove the studs 06L-240 and the washers 06L-230 from the cover oxygen container assy 06L-160.

(g) Remove the screws 06L-180, the nuts 06L-190 and the cover oxygen container assy 06L-160 from the angle 06L-170.

(h) Remove the screws 06L-220, the washers 06L-230 and the angle 06L-170 from the aft side wall assembly 06L-010.

(i) Remove the ground cable from the oxygen container assy 06L-210.

(j) Remove the screws 06L-220, the washers 06L-230 and the oxygen container assy 06L-210 from the angles 06L-200.

(k) Remove the screws 06L-220, the washers 06L-230 and the angles 06L-200 from the aft side wall assembly 06L-010.

(l) Remove the caps 06L-290, the screws 06L-280, 06L-300, the washers 06L-230 and the post assembly 06L-250.

(m) Disassemble the post assembly 06L-250 as follows:

1 Remove the screws 06L-260.

(n) Remove the screws 06L-030 and the fittings 06L-020 from the brackets 06L-013.

(o) Remove the brackets 06L-013, 06L-017 from the aft side wall assembly 06L-010.

SUB TASK 25-41-51-010-031-B01
D2549020614600 D2549020707000

2. Removal of the Side Wall (06L-1)

NOTE: **See TABLE 3148 for the references for the replacement procedures of permanent installed parts.**

IPL FIG. ITEM	COMPONENT PART NAME	IPL FIG. ITEM	REPLACEMENT PART NAME	SEE REPAIR TASK
06L-001 06L-250	Side Wall Post Assembly	06L-270	Nut	Replacement of the Riveted Parts

Table 3148
Reference list for the replacement of permanent installed parts

(a) Remove and disassemble the handle assemblies 06L-340 as follows:

1 Remove the security pins 06L-360 from the handle assemblies 06L-340.

2 Remove the handle assemblies 06L-340 from the aft side wall assembly 06L-010.

3 Remove the special screws 06L-350 and the special washers 06L-370 from the aft side wall assembly 06L-010.

(b) Remove the toilet seat cover dispenser 06L-320 from the screws 06L-330.

(c) Remove the screws 06L-330 from the aft side wall assembly 06L-010.

(d) Remove the studs 06L-240 and the washers 06L-230 from the cover oxygen container assy 06L-160.

(e) Remove the screws 06L-180, the nuts 06L-190 and the cover oxygen container assy 06L-160 from the angle 06L-170.

(f) Remove the screws 06L-220, the washers 06L-230 and the angle 06L-170 from the aft side wall assembly 06L-010.

(g) Remove the ground cable from the oxygen container assy 06L-210.

(h) Remove the screws 06L-220, the washers 06L-230 and the oxygen container assy 06L-210 from the angles 06L-200.

(i) Remove the screws 06L-220, the washers 06L-230 and the angles 06L-200 from the aft side wall assembly 06L-010.

(j) Remove the caps 06L-290, the screws 06L-280, 06L-300, the washers 06L-230 and the post assembly 06L-250.

(k) Disassemble the post assembly 06L-250 as follows:

1 Remove the screws 06L-260.

(l) Remove the screws 06L-030 and the fittings 06L-020 from the brackets 06L-013.

(m) Remove the brackets 06L-013, 06L-017 from the aft side wall assembly 06L-010.

SUB TASK 25-41-51-010-031-C01
D2549020701800 D2549030508800

3. Removal of the Side Wall (06L-1)

NOTE: **See TABLE 3149 for the references for the replacement procedures of permanent installed parts.**

IPL FIG. ITEM	COMPONENT PART NAME	IPL FIG. ITEM	REPLACEMENT PART NAME	SEE REPAIR TASK
06L-001 06L-250	Side Wall Post Assembly	06L-270	Nut	Replacement of the Riveted Parts

Table 3149
Reference list for the replacement of permanent installed parts

(a) Remove and disassemble the handle assemblies 06L-340 as follows:

1 Remove the security pins 06L-360 from the handle assemblies 06L-340.

2 Remove the handle assemblies 06L-340 from the aft side wall assembly 06L-010.

3 Remove the special screws 06L-350 and the special washers 06L-370 from the aft side wall assembly 06L-010.

(b) Remove the toilet seat cover dispenser 06L-320 from the screws 06L-330.

(c) Remove the screws 06L-330 from the aft side wall assembly 06L-010.

(d) Remove the studs 06L-240 and the washers 06L-230 from the cover oxygen container assy 06L-160.

(e) Remove the screws 06L-180, the nuts 06L-190 and the cover oxygen container assy 06L-160 from the angle 06L-170.

(f) Remove the screws 06L-220, the washers 06L-230 and the angle 06L-170 from the aft side wall assembly 06L-010.

(g) Remove the ground cable from the oxygen container assy 06L-210.

(h) Remove the screws 06L-220, the washers 06L-230 and the oxygen container assy 06L-210 from the angles 06L-200.

(i) Remove the screws 06L-220, the washers 06L-230 and the angles 06L-200 from the aft side wall assembly 06L-010.

(j) Remove the caps 06L-290, the screws 06L-280, 06L-300, the washers 06L-230 and the post assembly 06L-250.

(k) Disassemble the post assembly 06L-250 as follows:

1 Remove the screws 06L-260.

(l) Remove the screws 06L-030 and the fittings 06L-020 from the brackets 06L-013.

(m) Remove the brackets 06L-013, 06L-017 from the aft side wall assembly 06L-010.

SUB TASK 25-41-51-010-031-D01
D2549010514400 D2549010600200 D2549030507600 R225401175-002

4. Removal of the Side Wall (06L-1)

NOTE: **See TABLE 3150 for the references for the replacement procedures of permanent installed parts.**

IPL FIG. ITEM	COMPONENT PART NAME	IPL FIG. ITEM	REPLACEMENT PART NAME	SEE REPAIR TASK
06L-001 06L-250	Side Wall Post Assembly	06L-270	Nut	Replacement of the Riveted Parts

Table 3150
Reference list for the replacement of permanent installed parts

(a) Remove and disassemble the handle assembly 06L-120 as follows:

1 Remove the security pins 06L-140 from the handle assembly 06L-120.

2 Remove the handle assembly 06L-120 from the aft side wall assembly 06L-010.

3 Remove the special screws 06L-130 and the special washers 06L-150 from the aft side wall assembly 06L-010.

(b) Remove the screws 06L-281, the washers 06L-231 and the support 06L-310 from the aft side wall assembly 06L-010.

(c) Remove the toilet seat cover dispenser 06L-320 from the screws 06L-330.

(d) Remove the screws 06L-330 from the aft side wall assembly 06L-010.

(e) Remove the studs 06L-240 and the washers 06L-230 from the cover oxygen container assy 06L-160.

(f) Remove the screws 06L-180, the nuts 06L-190 and the cover oxygen container assy 06L-160 from the angle 06L-170.

(g) Remove the screws 06L-220, the washers 06L-230 and the angle 06L-170 from the aft side wall assembly 06L-010.

(h) Remove the ground cable from the oxygen container assy 06L-210.

(i) Remove the screws 06L-220, the washers 06L-230 and the oxygen container assy 06L-210 from the angles 06L-200.

(j) Remove the screws 06L-220, the washers 06L-230 and the angles 06L-200 from the aft side wall assembly 06L-010.

(k) Remove the caps 06L-290, the screws 06L-280, 06L-300, the washers 06L-230 and the post assembly 06L-250.

(l) Disassemble the post assembly 06L-250 as follows:

1 Remove the screws 06L-260.

(m) Remove the screws 06L-030 and the fittings 06L-020 from the brackets 06L-013.

(n) Remove the brackets 06L-013, 06L-017 from the aft side wall assembly 06L-010.

(o) Remove the plugs 06L-045.

SUB TASK 25-41-51-010-031-E01
D2549020514000 D2549020614400 D2549020700800 D2549020704000 D2549020709600 D2549020711000 D2549030509600 D2549030514000 D2549030514400 D2549030601200 D2549030603400 D2549030605200 D2549030605400 D2549030607600 D2549030611400

5. Removal of the Side Wall (06L-1)

NOTE: **See TABLE 3151 for the references for the replacement procedures of permanent installed parts.**

IPL FIG. ITEM	COMPONENT PART NAME	IPL FIG. ITEM	REPLACEMENT PART NAME	SEE REPAIR TASK
06L-001 06L-250	Side Wall Post Assembly	06L-270	Nut	Replacement of the Riveted Parts

Table 3151
Reference list for the replacement of permanent installed parts

(a) Remove and disassemble the handle assembly 06L-120 as follows:

1 Remove the security pins 06L-140 from the handle assembly 06L-120.

2 Remove the handle assembly 06L-120 from the aft side wall assembly 06L-010.

3 Remove the special screws 06L-130 and the special washers 06L-150 from the aft side wall assembly 06L-010.

(b) Remove the screws 06L-281, the washers 06L-231 and the support 06L-310 from the aft side wall assembly 06L-010.

(c) Remove the toilet seat cover dispenser 06L-320 from the screws 06L-330.

(d) Remove the screws 06L-330 from the aft side wall assembly 06L-010.

(e) Remove the studs 06L-240 and the washers 06L-230 from the cover oxygen container assy 06L-160.

(f) Remove the screws 06L-180, the nuts 06L-190 and the cover oxygen container assy 06L-160 from the angle 06L-170.

(g) Remove the screws 06L-220, the washers 06L-230 and the angle 06L-170 from the aft side wall assembly 06L-010.

(h) Remove the ground cable from the oxygen container assy 06L-210.

(i) Remove the screws 06L-220, the washers 06L-230 and the oxygen container assy 06L-210 from the angles 06L-200.

(j) Remove the screws 06L-220, the washers 06L-230 and the angles 06L-200 from the aft side wall assembly 06L-010.

(k) Remove the caps 06L-290, the screws 06L-280, 06L-300, the washers 06L-230 and the post assembly 06L-250.

(l) Disassemble the post assembly 06L-250 as follows:

1 Remove the screws 06L-260.

(m) Remove the screws 06L-030 and the fittings 06L-020 from the brackets 06L-013.

(n) Remove the brackets 06L-013, 06L-017 from the aft side wall assembly 06L-010.

SUB TASK 25-41-51-010-031-F01
D2549020506800

6. Removal of the Side Wall (06L-1)

NOTE: **See TABLE 3152 for the references for the replacement procedures of permanent installed parts.**

IPL FIG. ITEM	COMPONENT PART NAME	IPL FIG. ITEM	REPLACEMENT PART NAME	SEE REPAIR TASK
06L-001 06L-250	Side Wall Post Assembly	06L-270	Nut	Replacement of the Riveted Parts

Table 3152
Reference list for the replacement of permanent installed parts

(a) Remove and disassemble the handle assembly 06L-120 as follows:

1 Remove the security pins 06L-140 from the handle assembly 06L-120.

2 Remove the handle assembly 06L-120 from the aft side wall assembly 06L-010.

3 Remove the special screws 06L-130 and the special washers 06L-150 from the aft side wall assembly 06L-010.

(b) Remove the screws 06L-281, the washers 06L-231 and the support 06L-310 from the aft side wall assembly 06L-010.

(c) Remove the studs 06L-240 and the washers 06L-230 from the cover oxygen container assy 06L-160.

(d) Remove the screws 06L-180, the nuts 06L-190 and the cover oxygen container assy 06L-160 from the angle 06L-170.

(e) Remove the screws 06L-220, the washers 06L-230 and the angle 06L-170 from the aft side wall assembly 06L-010.

(f) Remove the ground cable from the oxygen container assy 06L-210.

(g) Remove the screws 06L-220, the washers 06L-230 and the oxygen container assy 06L-210 from the angles 06L-200.

(h) Remove the screws 06L-220, the washers 06L-230 and the angles 06L-200 from the aft side wall assembly 06L-010.

(i) Remove the caps 06L-290, the screws 06L-280, 06L-300, the washers 06L-230 and the post assembly 06L-250.

(j) Disassemble the post assembly 06L-250 as follows:

1 Remove the screws 06L-260.

(k) Remove the screws 06L-030 and the fittings 06L-020 from the brackets 06L-013.

(l) Remove the brackets 06L-013, 06L-017 from the aft side wall assembly 06L-010.

SUB TASK 25-41-51-010-031-G01
D2549010600000 D2549010600400 D2549020506600

7. Removal of the Side Wall (06L-1)

NOTE: **See TABLE 3153 for the references for the replacement procedures of permanent installed parts.**

IPL FIG. ITEM	COMPONENT PART NAME	IPL FIG. ITEM	REPLACEMENT PART NAME	SEE REPAIR TASK
06L-001 06L-250	Side Wall Post Assembly	06L-270	Nut	Replacement of the Riveted Parts

Table 3153
Reference list for the replacement of permanent installed parts

(a) Remove and disassemble the handle assembly 06L-120 as follows:

1 Remove the security pins 06L-140 from the handle assembly 06L-120.

2 Remove the handle assembly 06L-120 from the aft side wall assembly 06L-010.

3 Remove the special screws 06L-130 and the special washers 06L-150 from the aft side wall assembly 06L-010.

(b) Remove the screws 06L-281, the washers 06L-231 and the support 06L-310 from the aft side wall assembly 06L-010.

(c) Remove the studs 06L-240 and the washers 06L-230 from the cover oxygen container assy 06L-160.

(d) Remove the screws 06L-180, the nuts 06L-190 and the cover oxygen container assy 06L-160 from the angle 06L-170.

(e) Remove the screws 06L-220, the washers 06L-230 and the angle 06L-170 from the aft side wall assembly 06L-010.

(f) Remove the ground cable from the oxygen container assy 06L-210.

(g) Remove the screws 06L-220, the washers 06L-230 and the oxygen container assy 06L-210 from the angles 06L-200.

(h) Remove the screws 06L-220, the washers 06L-230 and the angles 06L-200 from the aft side wall assembly 06L-010.

(i) Remove the caps 06L-290, the screws 06L-280, 06L-300, the washers 06L-230 and the post assembly 06L-250.

(j) Disassemble the post assembly 06L-250 as follows:

1 Remove the screws 06L-260.

(k) Remove the screws 06L-030 and the fittings 06L-020 from the brackets 06L-013.

(l) Remove the brackets 06L-013, 06L-017 from the aft side wall assembly 06L-010.

SUB TASK 25-41-51-010-031-H01
D2549020612200 D2549020700000 D2549020705400 D2549020707400 D2549020708000 D2549030602600

8. Removal of the Side Wall (06L-1)

NOTE: **See TABLE 3154 for the references for the replacement procedures of permanent installed parts.**

IPL FIG. ITEM	COMPONENT PART NAME	IPL FIG. ITEM	REPLACEMENT PART NAME	SEE REPAIR TASK
06L-001 06L-250	Side Wall Post Assembly	06L-270	Nut	Replacement of the Riveted Parts

Table 3154
Reference list for the replacement of permanent installed parts

(a) Remove and disassemble the handle assemblies 06L-340 as follows:

1 Remove the security pins 06L-360 from the handle assemblies 06L-340.

2 Remove the handle assemblies 06L-340 from the aft side wall assembly 06L-010.

3 Remove the special screws 06L-350 and the special washers 06L-370 from the aft side wall assembly 06L-010.

(b) Remove the studs 06L-240 and the washers 06L-230 from the cover oxygen container assy 06L-160.

(c) Remove the screws 06L-180, the nuts 06L-190 and the cover oxygen container assy 06L-160 from the angle 06L-170.

(d) Remove the screws 06L-220, the washers 06L-230 and the angle 06L-170 from the aft side wall assembly 06L-010.

(e) Remove the ground cable from the oxygen container assy 06L-210.

(f) Remove the screws 06L-220, the washers 06L-230 and the oxygen container assy 06L-210 from the angles 06L-200.

(g) Remove the screws 06L-220, the washers 06L-230 and the angles 06L-200 from the aft side wall assembly 06L-010.

(h) Remove the caps 06L-290, the screws 06L-280, 06L-300, the washers 06L-230 and the post assembly 06L-250.

(i) Disassemble the post assembly 06L-250 as follows:

1 Remove the screws 06L-260.

(j) Remove the screws 06L-030 and the fittings 06L-020 from the brackets 06L-013.

(k) Remove the brackets 06L-013, 06L-017 from the aft side wall assembly 06L-010.

SUB TASK 25-41-51-010-031-J01
D2549030508600

9. Removal of the Side Wall (06L-1)

NOTE: **See TABLE 3155 for the references for the replacement procedures of permanent installed parts.**

IPL FIG. ITEM	COMPONENT PART NAME	IPL FIG. ITEM	REPLACEMENT PART NAME	SEE REPAIR TASK
06L-001 06L-250	Side Wall Post Assembly	06L-270	Nut	Replacement of the Riveted Parts

Table 3155
Reference list for the replacement of permanent installed parts

(a) Remove and disassemble the handle assemblies 06L-340 as follows:

1 Remove the security pins 06L-360 from the handle assemblies 06L-340.

2 Remove the handle assemblies 06L-340 from the aft side wall assembly 06L-010.

3 Remove the special screws 06L-350 and the special washers 06L-370 from the aft side wall assembly 06L-010.

(b) Remove the studs 06L-240 and the washers 06L-230 from the cover oxygen container assy 06L-160.

(c) Remove the screws 06L-180, the nuts 06L-190 and the cover oxygen container assy 06L-160 from the angle 06L-170.

(d) Remove the screws 06L-220, the washers 06L-230 and the angle 06L-170 from the aft side wall assembly 06L-010.

(e) Remove the ground cable from the oxygen container assy 06L-210.

(f) Remove the screws 06L-220, the washers 06L-230 and the oxygen container assy 06L-210 from the angles 06L-200.

(g) Remove the screws 06L-220, the washers 06L-230 and the angles 06L-200 from the aft side wall assembly 06L-010.

(h) Remove the caps 06L-290, the screws 06L-280, 06L-300, the washers 06L-230 and the post assembly 06L-250.

(i) Disassemble the post assembly 06L-250 as follows:

1 Remove the screws 06L-260.

(j) Remove the screws 06L-030 and the fittings 06L-020 from the brackets 06L-013.

(k) Remove the brackets 06L-013, 06L-017 from the aft side wall assembly 06L-010.

TASK 25-41-51-000-804-N01

D2549010514800 D2549010600600 D2549010601200 D2549010602800 D2549010603200 D2549010603800 D2549010604200 D2549010604800 D2549010606400 D2549010607800 D2549020507000 D2549020507200 D2549020508000 D2549020508600 D2549020509000 D2549020509200 D2549020512600 D2549020514200 D2549020514600 D2549020602200 D2549020612400 D2549020613000 D2549020613200 D2549020700200 D2549020701400 D2549020702000 D2549020702400 D2549020703200 D2549020706200 D2549020706600 D2549020708200 D2549020709000 D2549020710200 D2549020710400 D2549020714400 D2549030508000 D2549030509200 D2549030510800 D2549030511400 D2549030511800 D2549030513400 D2549030513600 D2549030600400 D2549030603000 D2549030607200 D2549030608600 R225401136-000 R225401136-010 R225401136-020 R225401136-022 R225401137-004 R225401137-006 R225401137-008 R225401137-012 R225401137-014 R225401153-000 R225401183-000 R225401183-008 R225401600-000 R225401600-002 R225401603-000 R225401619-002

32. Removal of the Side Wall

A. General

A complete disassembly of the component is not necessary and not recommended.

Do not disassemble the component more than it is necessary for:

- Cleaning
- Visual Inspection
- Replacement of defective parts.

B. Job Set-up Information

(1) Consumable Materials

REFERENCE	DESIGNATION
08-007	Sealant, High Temperature

Table 3156
Consumable Materials

(2) Fixtures, Tools, Test and Support Equipment

REFERENCE	DESIGNATION
	hot air blower

Table 3157
Fixtures, Tools, Test and Support Equipment

C. Procedure

WARNING: **BE CAREFUL WHEN YOU USE SOLVENTS/CLEANING AGENTS, SEALANTS AND OTHER MATERIALS. OBEY THE MATERIAL MANUFACTURER'S INSTRUCTIONS AND THE LOCAL REGULATIONS. MAKE SURE THAT THERE IS A GOOD FLOW OF AIR THROUGH THE WORK AREA. DO NOT BREATHE THE FUMES. DO NOT SMOKE. DO NOT USE THESE MATERIALS NEAR A FLAME, SPARKS OR SOURCES OF HEAT. USE PROTECTIVE CLOTHING, GOGGLES AND GLOVES. IF YOU GET ONE OF THESE MATERIALS ON YOUR SKIN OR IN YOUR EYES, FLUSH IT AWAY WITH A FLOW OF CLEAN WATER. IF YOU GET ONE OF THESE MATERIALS IN YOUR MOUTH, GET IMMEDIATE MEDICAL AID. IN GENERAL, THESE MATERIALS ARE POISONOUS, FLAMMABLE AND SKIN IRRITANTS.**

WARNING: **KEEP ALL HYDROCARBONS (FUELS, LUBRICANTS, ETC.) AWAY FROM ALL SOURCES OF OXYGEN. OXYGEN BECOMES EXPLOSIVE WHEN IT TOUCHES HYDROCARBONS.**

WARNING: **TO PREVENT CONTAMINATION OF THE OXYGEN SYSTEM, MAKE SURE THAT YOUR HANDS AND ALL THE TOOLS ARE CLEAN.**

CAUTION: **PUT DRY, CLEAN, METAL OR PLASTIC PLUGS ON ALL PIPES OR UNITS REMOVED TEMPORARILY. PUT EACH PIPE OR UNIT IN A SEALED VINYL BAG. UNWANTED MATERIALS IN THE OXYGEN SYSTEM CAN DAMAGE THE SYSTEM.**

CAUTION: **DO ALL THE WORK ON A CLEAN, SOFT SURFACE TO PREVENT DAMAGE TO THE COMPONENTS.**

SUB TASK 25-41-51-010-032-A01
D2549020613000

1. Removal of the Side Wall (06M-1)

NOTE: **See TABLE 3158 for the references for the replacement procedures of permanent installed parts.**

IPL FIG. ITEM	COMPONENT PART NAME	IPL FIG. ITEM	REPLACEMENT PART NAME	SEE REPAIR TASK
06M-001 06M-250	Side Wall Post Assembly	06M-270	Nut	Replacement of the Riveted Parts

Table 3158
Reference list for the replacement of permanent installed parts

(a) Remove and disassemble the handle assemblies 06M-340 as follows:

1 Remove the security pins 06M-360 from the handle assemblies 06M-340.

2 Remove the handle assemblies 06M-340 from the aft side wall assembly 06M-010.

3 Remove the special screws 06M-350 and the special washers 06M-370 from the aft side wall assembly 06M-010.

(b) Remove the toilet seat cover dispenser 06M-320 from the screws 06M-330.

(c) Remove the screws 06M-330 from the aft side wall assembly 06M-010.

(d) Remove the studs 06M-240 and the washers 06M-230 from the cover oxygen container assy 06M-160.

(e) Remove the screws 06M-180, the nuts 06M-190 and the cover oxygen container assy 06M-160 from the angle 06M-170.

(f) Remove the screws 06M-220, the washers 06M-230 and the angle 06M-170 from the aft side wall assembly 06M-010.

(g) Remove the ground cable from the oxygen container assy 06M-210.

(h) Remove the screws 06M-220, the washers 06M-230 and the oxygen container assy 06M-210 from the angles 06M-200.

(i) Remove the screws 06M-220, the washers 06M-230 and the angles 06M-200 from the aft side wall assembly 06M-010.

(j) Remove the screws 06M-390, 06M-400, the washers 06M-233 and the angle 06M-380 from the aft side wall assembly 06M-010.

(k) Remove the screws 06M-490, the nuts 06M-500, the plates 06M-480 and the single door emergency unlocking device assembly 06M-410 from the post assembly 06M-250.

(l) Disassemble the single door emergency unlocking device assembly 06M-410 as follows:

WARNING: BE CAREFUL WHEN YOU USE MATERIAL NO. 08-007 SEALANT, HIGH TEMPERATURE. OBEY THE MATERIAL MANUFACTURER'S INSTRUCTIONS.

1 Remove the bolt 06M-470 and the emergency unlocking-device strike 06M-430 from the emergency unlocking-device housing 06M-420.

NOTE: If necessary use a hot air blower to heat up the Material No. 08-007 Sealant, High Temperature to remove the bolt 06M-470.

WARNING: BE CAREFUL WHEN YOU USE MATERIAL NO. 08-007 SEALANT, HIGH TEMPERATURE. OBEY THE MATERIAL MANUFACTURER'S INSTRUCTIONS.

2 Remove the pin 06M-450, the snap catch 06M-460 and the emergency unlocking-device pivot 06M-440 from the emergency unlocking-device housing 06M-420.

NOTE: If necessary use a hot air blower to heat up the Material No. 08-007 Sealant, High Temperature to remove the snap catch 06M-460 and the pin 06M-450.

(m) Remove the caps 06M-290, the screws 06M-280, 06M-300, the washers 06M-230 and the post assembly 06M-250.

(n) Disassemble the post assembly 06M-250 as follows:

1 Remove the screws 06M-260.

(o) Remove the screws 06M-030, 06M-031, 06M-035 and the fittings 06M-021, 06M-025 from the aft side wall assembly 06M-010.

SUB TASK 25-41-51-010-032-B01
D2549020706200

2. Removal of the Side Wall (06M-1)

NOTE: **See TABLE 3159 for the references for the replacement procedures of permanent installed parts.**

IPL FIG. ITEM	COMPONENT PART NAME	IPL FIG. ITEM	REPLACEMENT PART NAME	SEE REPAIR TASK
06M-001 06M-250	Side Wall Post Assembly	06M-270	Nut	Replacement of the Riveted Parts

Table 3159
Reference list for the replacement of permanent installed parts

(a) Remove and disassemble the handle assemblies 06M-340 as follows:

1 Remove the security pins 06M-360 from the handle assemblies 06M-340.

2 Remove the handle assemblies 06M-340 from the aft side wall assembly 06M-010.

3 Remove the special screws 06M-350 and the special washers 06M-370 from the aft side wall assembly 06M-010.

(b) Remove the studs 06M-240 and the washers 06M-230 from the cover oxygen container assy 06M-160.

(c) Remove the screws 06M-180, the nuts 06M-190 and the cover oxygen container assy 06M-160 from the angle 06M-170.

(d) Remove the screws 06M-220, the washers 06M-230 and the angle 06M-170 from the aft side wall assembly 06M-010.

(e) Remove the ground cable from the oxygen container assy 06M-210.

(f) Remove the screws 06M-220, the washers 06M-230 and the oxygen container assy 06M-210 from the angles 06M-200.

(g) Remove the screws 06M-220, the washers 06M-230 and the angles 06M-200 from the aft side wall assembly 06M-010.

(h) Remove the screws 06M-490, the nuts 06M-500, the plates 06M-480 and the single door emergency unlocking device assembly 06M-410 from the post assembly 06M-250.

(i) Disassemble the single door emergency unlocking device assembly 06M-410 as follows:

WARNING: BE CAREFUL WHEN YOU USE MATERIAL NO. 08-007 SEALANT, HIGH TEMPERATURE. OBEY THE MATERIAL MANUFACTURER'S INSTRUCTIONS.

1 Remove the bolt 06M-470 and the emergency unlocking-device strike 06M-430 from the emergency unlocking-device housing 06M-420.

NOTE: If necessary use a hot air blower to heat up the Material No. 08-007 Sealant, High Temperature to remove the bolt 06M-470.

WARNING: BE CAREFUL WHEN YOU USE MATERIAL NO. 08-007 SEALANT, HIGH TEMPERATURE. OBEY THE MATERIAL MANUFACTURER'S INSTRUCTIONS.

2 Remove the pin 06M-450, the snap catch 06M-460 and the emergency unlocking-device pivot 06M-440 from the emergency unlocking-device housing 06M-420.

NOTE: If necessary use a hot air blower to heat up the Material No. 08-007 Sealant, High Temperature to remove the snap catch 06M-460 and the pin 06M-450.

(j) Remove the caps 06M-290, the screws 06M-280, 06M-300, the washers 06M-230 and the post assembly 06M-250.

(k) Disassemble the post assembly 06M-250 as follows:

1 Remove the screws 06M-260.

(l) Remove the screws 06M-030 and the fittings 06M-020 from the brackets 06M-013.

(m) Remove the brackets 06M-013, 06M-017 from the aft side wall assembly 06M-010.

SUB TASK 25-41-51-010-032-C01

D2549010603800 D2549010604200 D2549020702400 D2549020703200 D2549030509200 D2549030513600 R225401137-004 R225401137-006 R225401137-008 R225401137-012 R225401137-014 R225401600-000 R225401600-002

3. Removal of the Side Wall (06M-1)

NOTE: **See TABLE 3160 for the references for the replacement procedures of permanent installed parts.**

IPL FIG. ITEM	COMPONENT PART NAME	IPL FIG. ITEM	REPLACEMENT PART NAME	SEE REPAIR TASK
06M-001 06M-250	Side Wall Post Assembly	06M-270	Nut	Replacement of the Riveted Parts

Table 3160
Reference list for the replacement of permanent installed parts

(a) Remove and disassemble the handle assembly 06M-120 as follows:

1 Remove the security pins 06M-140 from the handle assembly 06M-120.

2 Remove the handle assembly 06M-120 from the aft side wall assembly 06M-010.

3 Remove the special screws 06M-130 and the special washers 06M-150 from the aft side wall assembly 06M-010.

(b) Remove the screws 06M-221, the washers 06M-231 and the support 06M-310 from the aft side wall assembly 06M-010.

(c) Remove the toilet seat cover dispenser 06M-320 from the screws 06M-330.

(d) Remove the screws 06M-330 from the aft side wall assembly 06M-010.

(e) Remove the studs 06M-240 and the washers 06M-230 from the cover oxygen container assy 06M-160.

(f) Remove the screws 06M-180, the nuts 06M-190 and the cover oxygen container assy 06M-160 from the angle 06M-170.

(g) Remove the screws 06M-220, the washers 06M-230 and the angle 06M-170 from the aft side wall assembly 06M-010.

(h) Remove the ground cable from the oxygen container assy 06M-210.

(i) Remove the screws 06M-220, the washers 06M-230 and the oxygen container assy 06M-210 from the angles 06M-200.

(j) Remove the screws 06M-220, the washers 06M-230 and the angles 06M-200 from the aft side wall assembly 06M-010.

(k) Remove the caps 06M-290, the screws 06M-280, 06M-300, the washers 06M-230 and the post assembly 06M-250.

(l) Disassemble the post assembly 06M-250 as follows:

1 Remove the screws 06M-260.

(m) Remove the screws 06M-030 and the fittings 06M-020 from the brackets 06M-013.

(n) Remove the brackets 06M-013, 06M-017 from the aft side wall assembly 06M-010.

SUB TASK 25-41-51-010-032-D01
D2549020509000 D2549020702000 D2549020714400 D2549030511800 D2549030600400 D2549030603000 D2549030607200

4. Removal of the Side Wall (06M-1)

NOTE: **See TABLE 3161 for the references for the replacement procedures of permanent installed parts.**

IPL FIG. ITEM	COMPONENT PART NAME	IPL FIG. ITEM	REPLACEMENT PART NAME	SEE REPAIR TASK
06M-001 06M-250	Side Wall Post Assembly	06M-270	Nut	Replacement of the Riveted Parts

Table 3161
Reference list for the replacement of permanent installed parts

(a) Remove and disassemble the handle assembly 06M-120 as follows:

1 Remove the security pins 06M-140 from the handle assembly 06M-120.

2 Remove the handle assembly 06M-120 from the aft side wall assembly 06M-010.

3 Remove the special screws 06M-130 and the special washers 06M-150 from the aft side wall assembly 06M-010.

(b) Remove the screws 06M-221, the washers 06M-231 and the support 06M-310 from the aft side wall assembly 06M-010.

(c) Remove the toilet seat cover dispenser 06M-320 from the screws 06M-330.

(d) Remove the screws 06M-330 from the aft side wall assembly 06M-010.

(e) Remove the studs 06M-240 and the washers 06M-230 from the cover oxygen container assy 06M-160.

(f) Remove the screws 06M-180, the nuts 06M-190 and the cover oxygen container assy 06M-160 from the angle 06M-170.

(g) Remove the screws 06M-220, the washers 06M-230 and the angle 06M-170 from the aft side wall assembly 06M-010.

(h) Remove the ground cable from the oxygen container assy 06M-210.

(i) Remove the screws 06M-220, the washers 06M-230 and the oxygen container assy 06M-210 from the angles 06M-200.

(j) Remove the screws 06M-220, the washers 06M-230 and the angles 06M-200 from the aft side wall assembly 06M-010.

(k) Remove the caps 06M-290, the screws 06M-280, 06M-300, the washers 06M-230 and the post assembly 06M-250.

(l) Disassemble the post assembly 06M-250 as follows:

1 Remove the screws 06M-260.

(m) Remove the screws 06M-030 and the fittings 06M-020 from the brackets 06M-013.

(n) Remove the brackets 06M-013, 06M-017 from the aft side wall assembly 06M-010.

SUB TASK 25-41-51-010-032-E01
D2549010601200 D2549010603200 D2549010604800 D2549010606400 D2549010607800 D2549020508000 D2549020512600 D2549020701400 D2549020706600 D2549020709000 R225401183-000 R225401183-008 R225401603-000

5. Removal of the Side Wall (06M-1)

NOTE: **See TABLE 3162 for the references for the replacement procedures of permanent installed parts.**

IPL FIG. ITEM	COMPONENT PART NAME	IPL FIG. ITEM	REPLACEMENT PART NAME	SEE REPAIR TASK
06M-001 06M-250	Side Wall Post Assembly	06M-270	Nut	Replacement of the Riveted Parts

Table 3162
Reference list for the replacement of permanent installed parts

(a) Remove and disassemble the handle assemblies 06M-340 as follows:

1 Remove the security pins 06M-360 from the handle assemblies 06M-340.

2 Remove the handle assemblies 06M-340 from the aft side wall assembly 06M-010.

3 Remove the special screws 06M-350 and the special washers 06M-370 from the aft side wall assembly 06M-010.

(b) Remove the toilet seat cover dispenser 06M-320 from the screws 06M-330.

(c) Remove the screws 06M-330 from the aft side wall assembly 06M-010.

(d) Remove the studs 06M-240 and the washers 06M-230 from the cover oxygen container assy 06M-160.

(e) Remove the screws 06M-180, the nuts 06M-190 and the cover oxygen container assy 06M-160 from the angle 06M-170.

(f) Remove the screws 06M-220, the washers 06M-230 and the angle 06M-170 from the aft side wall assembly 06M-010.

(g) Remove the ground cable from the oxygen container assy 06M-210.

(h) Remove the screws 06M-220, 06M-225, the washers 06M-230 and the oxygen container assy 06M-210 from the angles 06M-200.

(i) Remove the screws 06M-220, the washers 06M-230 and the angles 06M-200 from the aft side wall assembly 06M-010.

(j) Remove the caps 06M-290, the screws 06M-280, 06M-300, the washers 06M-230 and the post assembly 06M-250.

(k) Disassemble the post assembly 06M-250 as follows:

1 Remove the screws 06M-260.

(l) Remove the screws 06M-030 and the fittings 06M-020 from the brackets 06M-013.

(m) Remove the brackets 06M-013, 06M-017 from the aft side wall assembly 06M-010.

SUB TASK 25-41-51-010-032-F01
D2549020508600 D2549020710200 D2549020710400 D2549030510800 D2549030513400 D2549030608600 R225401136-000 R225401136-010 R225401136-020 R225401136-022

6. Removal of the Side Wall (06M-1)

NOTE: **See TABLE 3163 for the references for the replacement procedures of permanent installed parts.**

IPL FIG. ITEM	COMPONENT PART NAME	IPL FIG. ITEM	REPLACEMENT PART NAME	SEE REPAIR TASK
06M-001 06M-250	Side Wall Post Assembly	06M-270	Nut	Replacement of the Riveted Parts

Table 3163
Reference list for the replacement of permanent installed parts

(a) Remove and disassemble the handle assemblies 06M-340 as follows:

1 Remove the security pins 06M-360 from the handle assemblies 06M-340.

2 Remove the handle assemblies 06M-340 from the aft side wall assembly 06M-010.

3 Remove the special screws 06M-350 and the special washers 06M-370 from the aft side wall assembly 06M-010.

(b) Remove the studs 06M-240 and the washers 06M-230 from the cover oxygen container assy 06M-160.

(c) Remove the screws 06M-180, the nuts 06M-190 and the cover oxygen container assy 06M-160 from the angle 06M-170.

(d) Remove the screws 06M-220, the washers 06M-230 and the angle 06M-170 from the aft side wall assembly 06M-010.

(e) Remove the ground cable from the oxygen container assy 06M-210.

(f) Remove the screws 06M-220, 06M-225, the washers 06M-230 and the oxygen container assy 06M-210 from the angles 06M-200.

(g) Remove the screws 06M-220, the washers 06M-230 and the angles 06M-200 from the aft side wall assembly 06M-010.

(h) Remove the caps 06M-290, the screws 06M-280, 06M-300, the washers 06M-230 and the post assembly 06M-250.

(i) Disassemble the post assembly 06M-250 as follows:

1 Remove the screws 06M-260.

(j) Remove the screws 06M-030 and the fittings 06M-020 from the brackets 06M-013.

(k) Remove the brackets 06M-013, 06M-017 from the aft side wall assembly 06M-010.

SUB TASK 25-41-51-010-032-G01

D2549020514200 D2549020514600 D2549020602200 D2549020613200 R225401619-002

7. Removal of the Side Wall (06M-1)

NOTE: **See TABLE 3164 for the references for the replacement procedures of permanent installed parts.**

IPL FIG. ITEM	COMPONENT PART NAME	IPL FIG. ITEM	REPLACEMENT PART NAME	SEE REPAIR TASK
06M-001 06M-250	Side Wall Post Assembly	06M-270	Nut	Replacement of the Riveted Parts

Table 3164
Reference list for the replacement of permanent installed parts

(a) Remove and disassemble the handle assemblies 06M-340 as follows:

1 Remove the security pins 06M-360 from the handle assemblies 06M-340.

2 Remove the handle assemblies 06M-340 from the aft side wall assembly 06M-010.

3 Remove the special screws 06M-350 and the special washers 06M-370 from the aft side wall assembly 06M-010.

(b) Remove the studs 06M-240 and the washers 06M-230 from the cover oxygen container assy 06M-160.

(c) Remove the screws 06M-180, the nuts 06M-190 and the cover oxygen container assy 06M-160 from the angle 06M-170.

(d) Remove the screws 06M-220, the washers 06M-230 and the angle 06M-170 from the aft side wall assembly 06M-010.

(e) Remove the ground cable from the oxygen container assy 06M-210.

(f) Remove the screws 06M-220, the washers 06M-230 and the oxygen container assy 06M-210 from the angles 06M-200.

(g) Remove the screws 06M-220, the washers 06M-230 and the angles 06M-200 from the aft side wall assembly 06M-010.

(h) Remove the caps 06M-290, the screws 06M-280, 06M-300, the washers 06M-230 and the post assembly 06M-250.

(i) Disassemble the post assembly 06M-250 as follows:

1 Remove the screws 06M-260.

(j) Remove the screws 06M-030 and the fittings 06M-020 from the brackets 06M-013.

(k) Remove the brackets 06M-013, 06M-017 from the aft side wall assembly 06M-010.

SUB TASK 25-41-51-010-032-H01
D2549010514800 D2549010600600 D2549010602800 D2549020509200

D2549020612400 D2549020700200 D2549020708200 D2549030508000
D2549030511400 R225401153-000

8. Removal of the Side Wall (06M-1)

NOTE: **See TABLE 3165 for the references for the replacement procedures of permanent installed parts.**

IPL FIG. ITEM	COMPONENT PART NAME	IPL FIG. ITEM	REPLACEMENT PART NAME	SEE REPAIR TASK
06M-001 06M-250	Side Wall Post Assembly	06M-270	Nut	Replacement of the Riveted Parts

Table 3165
Reference list for the replacement of permanent installed parts

(a) Remove and disassemble the handle assembly 06M-120 as follows:

1 Remove the security pins 06M-140 from the handle assembly 06M-120.

2 Remove the handle assembly 06M-120 from the aft side wall assembly 06M-010.

3 Remove the special screws 06M-130 and the special washers 06M-150 from the aft side wall assembly 06M-010.

(b) Remove the screws 06M-221, the washers 06M-231 and the support 06M-310 from the aft side wall assembly 06M-010.

(c) Remove the studs 06M-240 and the washers 06M-230 from the cover oxygen container assy 06M-160.

(d) Remove the screws 06M-180, the nuts 06M-190 and the cover oxygen container assy 06M-160 from the angle 06M-170.

(e) Remove the screws 06M-220, the washers 06M-230 and the angle 06M-170 from the aft side wall assembly 06M-010.

(f) Remove the ground cable from the oxygen container assy 06M-210.

(g) Remove the screws 06M-220, 06M-225, the washers 06M-230 and the oxygen container assy 06M-210 from the angles 06M-200.

(h) Remove the screws 06M-220, the washers 06M-230 and the angles 06M-200 from the aft side wall assembly 06M-010.

(i) Remove the caps 06M-290, the screws 06M-280, 06M-300, the washers 06M-230 and the post assembly 06M-250.

(j) Disassemble the post assembly 06M-250 as follows:

1 Remove the screws 06M-260.

(k) Remove the screws 06M-030 and the fittings 06M-020 from the brackets 06M-013.

(l) Remove the brackets 06M-013, 06M-017 from the aft side wall assembly 06M-010.

SUB TASK 25-41-51-010-032-J01
D2549020507000 D2549020507200

9. Removal of the Side Wall (06M-1)

NOTE: **See TABLE 3166 for the references for the replacement procedures of permanent installed parts.**

IPL FIG. ITEM	COMPONENT PART NAME	IPL FIG. ITEM	REPLACEMENT PART NAME	SEE REPAIR TASK
06M-001 06M-250	Side Wall Post Assembly	06M-270	Nut	Replacement of the Riveted Parts

Table 3166
Reference list for the replacement of permanent installed parts

(a) Remove and disassemble the handle assembly 06M-120 as follows:

1 Remove the security pins 06M-140 from the handle assembly 06M-120.

2 Remove the handle assembly 06M-120 from the aft side wall assembly 06M-010.

3 Remove the special screws 06M-130 and the special washers 06M-150 from the aft side wall assembly 06M-010.

(b) Remove the screws 06M-221, the washers 06M-231 and the support 06M-310 from the aft side wall assembly 06M-010.

(c) Remove the studs 06M-240 and the washers 06M-230 from the cover oxygen container assy 06M-160.

(d) Remove the screws 06M-180, the nuts 06M-190 and the cover oxygen container assy 06M-160 from the angle 06M-170.

(e) Remove the screws 06M-220, the washers 06M-230 and the angle 06M-170 from the aft side wall assembly 06M-010.

(f) Remove the ground cable from the oxygen container assy 06M-210.

(g) Remove the screws 06M-220, the washers 06M-230 and the oxygen container assy 06M-210 from the angles 06M-200.

(h) Remove the screws 06M-220, the washers 06M-230 and the angles 06M-200 from the aft side wall assembly 06M-010.

(i) Remove the caps 06M-290, the screws 06M-280, 06M-300, the washers 06M-230 and the post assembly 06M-250.

(j) Disassemble the post assembly 06M-250 as follows:

1 Remove the screws 06M-260.

(k) Remove the screws 06M-030 and the fittings 06M-020 from the brackets 06M-013.

(l) Remove the brackets 06M-013, 06M-017 from the aft side wall assembly 06M-010.

TASK 25-41-51-000-804-P01

D2549010514600 D2549010601400 D2549010602000 D2549010602200 D2549010603000 D2549010603400 D2549010604400 D2549010604600 D2549010605000 D2549010605800 D2549010607200 D2549020514400 D2549020612800 D2549020613800 D2549020614000 D2549020700400 D2549020700600 D2549020701000 D2549020706000 D2549020707800 D2549020710600 D2549020713800 D2549030507400 D2549030509800 D2549030510200 D2549030511000 D2549030511200 D2549030511600 D2549030512000 D2549030512200 D2549030512800 D2549030514800 D2549030600000 D2549030600800 D2549030601000 D2549030601600 D2549030602000 D2549030603600 D2549030604600 D2549030605000 D2549030606200 D2549030606600 D2549030607800 D2549030609200 D2549030611600 R225401145-002 R225401145-004 R225401145-006 R225401145-012 R225401168-000 R225401168-004 R225401168-006 R225401168-014 R225401168-016 R225401168-018 R225401168-020 R225401168-028 R225401172-006 R225401172-008 R225401172-010 R225401172-012 R225401172-014 R225401172-016 R225401619-000

33. Removal of the Side Wall

A. General

A complete disassembly of the component is not necessary and not recommended.

Do not disassemble the component more than it is necessary for:

- Cleaning
- Visual Inspection
- Replacement of defective parts.

B. Job Set-up Information
(1) Consumable Materials

REFERENCE	DESIGNATION
08-017A	Adhesive Structuralflexible

Table 3167
Consumable Materials

C. Procedure

WARNING: **BE CAREFUL WHEN YOU USE SOLVENTS/CLEANING AGENTS, SEALANTS AND OTHER MATERIALS. OBEY THE MATERIAL MANUFACTURER'S INSTRUCTIONS AND THE LOCAL REGULATIONS. MAKE SURE THAT THERE IS A GOOD FLOW OF AIR THROUGH THE WORK AREA. DO NOT BREATHE THE FUMES. DO NOT SMOKE. DO NOT USE THESE MATERIALS NEAR A FLAME, SPARKS OR SOURCES OF HEAT. USE PROTECTIVE CLOTHING, GOGGLES AND GLOVES. IF YOU GET ONE OF THESE MATERIALS ON YOUR SKIN OR IN YOUR EYES, FLUSH IT AWAY WITH A FLOW OF CLEAN WATER. IF YOU GET ONE OF THESE MATERIALS IN YOUR MOUTH, GET IMMEDIATE MEDICAL AID. IN GENERAL, THESE MATERIALS ARE POISONOUS, FLAMMABLE AND SKIN IRRITANTS.**

WARNING: **KEEP ALL HYDROCARBONS (FUELS, LUBRICANTS, ETC.) AWAY FROM ALL SOURCES OF OXYGEN. OXYGEN BECOMES EXPLOSIVE WHEN IT TOUCHES HYDROCARBONS.**

WARNING: **TO PREVENT CONTAMINATION OF THE OXYGEN SYSTEM, MAKE SURE THAT YOUR HANDS AND ALL THE TOOLS ARE CLEAN.**

CAUTION: **PUT DRY, CLEAN, METAL OR PLASTIC PLUGS ON ALL PIPES OR UNITS REMOVED TEMPORARILY. PUT EACH PIPE OR UNIT IN A SEALED VINYL BAG. UNWANTED MATERIALS IN THE OXYGEN SYSTEM CAN DAMAGE THE SYSTEM.**

CAUTION: **DO ALL THE WORK ON A CLEAN, SOFT SURFACE TO PREVENT DAMAGE TO THE COMPONENTS.**

SUB TASK 25-41-51-010-033-A01
D2549020707800

1. Removal of the Side Wall (06N-1)

NOTE: **See TABLE 3168 for the references for the replacement procedures of permanent installed parts.**

More data for bonded parts are given in column SEE REPAIR TASK. Use the data for the selection of the related repair solution.

IPL FIG. ITEM	COMPONENT PART NAME	IPL FIG. ITEM	REPLACEMENT PART NAME	SEE REPAIR TASK
06N-001 06N-250	Side Wall Post Assembly	06N-270	Nut	Replacement of the Riveted Parts
06N-001	Side Wall	06N-380	Reinforcing Strip	Replacement of the Bonded Parts Material No. 08-017A Adhesive Structuralflexible

Table 3168
Reference list for the replacement of permanent installed parts

(a) Remove and disassemble the handle assemblies 06N-120 as follows:

1 Remove the security pins 06N-140 from the handle assemblies 06N-120.

2 Remove the handle assemblies 06N-120 from the aft side wall assembly 06N-010.

3 Remove the special screws 06N-130 and the special washers 06N-150 from the aft side wall assembly 06N-010.

(b) Remove the toilet seat cover dispenser 06N-320 from the screws 06N-330.

(c) Remove the screws 06N-330 from the aft side wall assembly 06N-010.

(d) Remove the studs 06N-240 and the washers 06N-230 from the cover oxygen container assy 06N-160.

(e) Remove the screws 06N-180, the nuts 06N-190 and the cover oxygen container assy 06N-160 from the angle 06N-170.

(f) Remove the screws 06N-220, the washers 06N-230 and the angle 06N-170 from the aft side wall assembly 06N-010.

(g) Remove the ground cable from the oxygen container assy 06N-210.

(h) Remove the screws 06N-220, the washers 06N-230 and the oxygen container assy 06N-210 from the angles 06N-200.

(i) Remove the screws 06N-220, the washers 06N-230 and the angles 06N-200 from the aft side wall assembly 06N-010.

(j) Remove the caps 06N-290, the screws 06N-280, 06N-300, the washers 06N-230 and the post assembly 06N-250.

(k) Disassemble the post assembly 06N-250 as follows:

1 Remove the screws 06N-260.

(l) Remove the screws 06N-030 and the fittings 06N-020 from the brackets 06N-013.

(m) Remove the brackets 06N-013, 06N-017 from the aft side wall assembly 06N-010.

SUB TASK 25-41-51-010-033-B01
D2549010514600 D2549010604400 D2549010605000 D2549010607200 D2549020710600 D2549030511200 D2549030512800 R225401145-002 R225401145-004 R225401145-006 R225401145-012

2. Removal of the Side Wall (06N-1)

NOTE: **See TABLE 3169 for the references for the replacement procedures of permanent installed parts.**

IPL FIG. ITEM	COMPONENT PART NAME	IPL FIG. ITEM	REPLACEMENT PART NAME	SEE REPAIR TASK
06N-001 06N-250	Side Wall Post Assembly	06N-270	Nut	Replacement of the Riveted Parts

Table 3169
Reference list for the replacement of permanent installed parts

(a) Remove and disassemble the handle assembly 06N-340 as follows:

1 Remove the security pins 06N-360 from the handle assembly 06N-340.

2 Remove the handle assembly 06N-340 from the aft side wall assembly 06N-010.

3 Remove the special screws 06N-350 and the special washers 06N-370 from the aft side wall assembly 06N-010.

(b) Remove the screws 06N-221, the washers 06N-231 and the support 06N-310 from the aft side wall assembly 06N-010.

(c) Remove the toilet seat cover dispenser 06N-320 from the screws 06N-330.

(d) Remove the screws 06N-330 from the aft side wall assembly 06N-010.

(e) Remove the studs 06N-240 and the washers 06N-230 from the cover oxygen container assy 06N-160.

(f) Remove the screws 06N-180, the nuts 06N-190 and the cover oxygen container assy 06N-160 from the angle 06N-170.

(g) Remove the screws 06N-220, the washers 06N-230 and the angle 06N-170 from the aft side wall assembly 06N-010.

(h) Remove the ground cable from the oxygen container assy 06N-210.

(i) Remove the screws 06N-220, 06N-222, the washers 06N-230 and the oxygen container assy 06N-210 from the angles 06N-200.

(j) Remove the screws 06N-220, the washers 06N-230 and the angles 06N-200 from the aft side wall assembly 06N-010.

(k) Remove the caps 06N-290, the screws 06N-280, 06N-300, the washers 06N-230 and the post assembly 06N-250.

(l) Disassemble the post assembly 06N-250 as follows:

1 Remove the screws 06N-260.

(m) Remove the screws 06N-030 and the fittings 06N-020 from the brackets 06N-013.

(n) Remove the brackets 06N-013, 06N-017 from the aft side wall assembly 06N-010.

SUB TASK 25-41-51-010-033-C01

D2549010601400 D2549020612800 D2549020713800 D2549030509800 D2549030511000 D2549030512000 D2549030514800 D2549030602000 D2549030605000 D2549030606200 D2549030609200 D2549030611600 R225401172-

006 R225401172-008 R225401172-010 R225401172-012 R225401172-014 R225401172-016

3. Removal of the Side Wall (06N-1)

NOTE: **See TABLE 3170 for the references for the replacement procedures of permanent installed parts.**

IPL FIG. ITEM	COMPONENT PART NAME	IPL FIG. ITEM	REPLACEMENT PART NAME	SEE REPAIR TASK
06N-001 06N-250	Side Wall Post Assembly	06N-270	Nut	Replacement of the Riveted Parts

Table 3170
Reference list for the replacement of permanent installed parts

(a) Remove and disassemble the handle assemblies 06N-120 as follows:

1 Remove the security pins 06N-140 from the handle assemblies 06N-120.

2 Remove the handle assemblies 06N-120 from the aft side wall assembly 06N-010.

3 Remove the special screws 06N-130 and the special washers 06N-150 from the aft side wall assembly 06N-010.

(b) Remove the toilet seat cover dispenser 06N-320 from the screws 06N-330.

(c) Remove the screws 06N-330 from the aft side wall assembly 06N-010.

(d) Remove the studs 06N-240 and the washers 06N-230 from the cover oxygen container assy 06N-160.

(e) Remove the screws 06N-180, the nuts 06N-190 and the cover oxygen container assy 06N-160 from the angle 06N-170.

(f) Remove the screws 06N-220, the washers 06N-230 and the angle 06N-170 from the aft side wall assembly 06N-010.

(g) Remove the ground cable from the oxygen container assy 06N-210.

(h) Remove the screws 06N-220, 06N-222, the washers 06N-230 and the oxygen container assy 06N-210 from the angles 06N-200.

(i) Remove the screws 06N-220, the washers 06N-230 and the angles 06N-200 from the aft side wall assembly 06N-010.

(j) Remove the caps 06N-290, the screws 06N-280, 06N-300, the washers 06N-230 and the post assembly 06N-250.

(k) Disassemble the post assembly 06N-250 as follows:

1 Remove the screws 06N-260.

(l) Remove the screws 06N-030 and the fittings 06N-020 from the brackets 06N-013.

(m) Remove the brackets 06N-013, 06N-017 from the aft side wall assembly 06N-010.

SUB TASK 25-41-51-010-033-D01
D2549020613800

4. Removal of the Side Wall (06N-1)

NOTE: **See TABLE 3171 for the references for the replacement procedures of permanent installed parts.**

IPL FIG. ITEM	COMPONENT PART NAME	IPL FIG. ITEM	REPLACE-MENT PART NAME	SEE REPAIR TASK
06N-001 06N-250	Side Wall Post Assembly	06N-270	Nut	Replacement of the Riveted Parts

Table 3171
Reference list for the replacement of permanent installed parts

(a) Remove and disassemble the handle assembly 06N-340 as follows:

1 Remove the security pins 06N-360 from the handle assembly 06N-340.

2 Remove the handle assembly 06N-340 from the aft side wall assembly 06N-010.

3 Remove the special screws 06N-350 and the special washers 06N-370 from the aft side wall assembly 06N-010.

(b) Remove the screws 06N-221, the washers 06N-231 and the support 06N-310 from the aft side wall assembly 06N-010.

(c) Remove the studs 06N-240 and the washers 06N-230 from the cover oxygen container assy 06N-160.

(d) Remove the screws 06N-180, the nuts 06N-190 and the cover oxygen container assy 06N-160 from the angle 06N-170.

(e) Remove the screws 06N-220, the washers 06N-230 and the angle 06N-170 from the aft side wall assembly 06N-010.

(f) Remove the ground cable from the oxygen container assy 06N-210.

(g) Remove the screws 06N-220, the washers 06N-230 and the oxygen container assy 06N-210 from the angles 06N-200.

(h) Remove the screws 06N-220, the washers 06N-230 and the angles 06N-200 from the aft side wall assembly 06N-010.

(i) Remove the caps 06N-290, the screws 06N-280, 06N-300, the washers 06N-230 and the post assembly 06N-250.

(j) Disassemble the post assembly 06N-250 as follows:

1 Remove the screws 06N-260.

(k) Remove the screws 06N-030 and the fittings 06N-020 from the brackets 06N-013.

(l) Remove the brackets 06N-013, 06N-017 from the aft side wall assembly 06N-010.

SUB TASK 25-41-51-010-033-E01
D2549010602000 D2549010602200 D2549010604600 D2549020701000

5. Removal of the Side Wall (06N-1)

NOTE: **See TABLE 3172 for the references for the replacement procedures of permanent installed parts.**

IPL FIG. ITEM	COMPONENT PART NAME	IPL FIG. ITEM	REPLACEMENT PART NAME	SEE REPAIR TASK
06N-001 06N-250	Side Wall Post Assembly	06N-270	Nut	Replacement of the Riveted Parts

Table 3172
Reference list for the replacement of permanent installed parts

(a) Remove and disassemble the handle assembly 06N-340 as follows:

1 Remove the security pins 06N-360 from the handle assembly 06N-340.

2 Remove the handle assembly 06N-340 from the aft side wall assembly 06N-010.

3 Remove the special screws 06N-350 and the special washers 06N-370 from the aft side wall assembly 06N-010.

(b) Remove the screws 06N-221, the washers 06N-231 and the support 06N-310 from the aft side wall assembly 06N-010.

(c) Remove the studs 06N-240 and the washers 06N-230 from the cover oxygen container assy 06N-160.

(d) Remove the screws 06N-180, the nuts 06N-190 and the cover oxygen container assy 06N-160 from the angle 06N-170.

(e) Remove the screws 06N-220, the washers 06N-230 and the angle 06N-170 from the aft side wall assembly 06N-010.

(f) Remove the ground cable from the oxygen container assy 06N-210.

(g) Remove the screws 06N-220, the washers 06N-230 and the oxygen container assy 06N-210 from the angles 06N-200.

(h) Remove the screws 06N-220, the washers 06N-230 and the angles 06N-200 from the aft side wall assembly 06N-010.

(i) Remove the caps 06N-290, the screws 06N-280, 06N-300, the washers 06N-230 and the post assembly 06N-250.

(j) Disassemble the post assembly 06N-250 as follows:

1 Remove the screws 06N-260.

(k) Remove the screws 06N-030 and the fittings 06N-020 from the brackets 06N-013.

(l) Remove the brackets 06N-013, 06N-017 from the aft side wall assembly 06N-010.

SUB TASK 25-41-51-010-033-F01
D2549010603000 D2549010603400 D2549010605800 D2549020514400 D2549020614000 D2549020700400 D2549020700600 D2549020706000 D2549030601000 D2549030606600 R225401619-000

6. Removal of the Side Wall (06N-1)

NOTE: **See TABLE 3173 for the references for the replacement procedures of permanent installed parts.**

IPL FIG. ITEM	COMPONENT PART NAME	IPL FIG. ITEM	REPLACEMENT PART NAME	SEE REPAIR TASK
06N-001 06N-250	Side Wall Post Assembly	06N-270	Nut	Replacement of the Riveted Parts

Table 3173
Reference list for the replacement of permanent installed parts

(a) Remove and disassemble the handle assemblies 06N-120 as follows:

1 Remove the security pins 06N-140 from the handle assemblies 06N-120.

2 Remove the handle assemblies 06N-120 from the aft side wall assembly 06N-010.

3 Remove the special screws 06N-130 and the special washers 06N-150 from the aft side wall assembly 06N-010.

(b) Remove the studs 06N-240 and the washers 06N-230 from the cover oxygen container assy 06N-160.

(c) Remove the screws 06N-180, the nuts 06N-190 and the cover oxygen container assy 06N-160 from the angle 06N-170.

(d) Remove the screws 06N-220, the washers 06N-230 and the angle 06N-170 from the aft side wall assembly 06N-010.

(e) Remove the ground cable from the oxygen container assy 06N-210.

(f) Remove the screws 06N-220, the washers 06N-230 and the oxygen container assy 06N-210 from the angles 06N-200.

(g) Remove the screws 06N-220, the washers 06N-230 and the angles 06N-200 from the aft side wall assembly 06N-010.

(h) Remove the caps 06N-290, the screws 06N-280, 06N-300, the washers 06N-230 and the post assembly 06N-250.

(i) Disassemble the post assembly 06N-250 as follows:

1 Remove the screws 06N-260.

(j) Remove the screws 06N-030 and the fittings 06N-020 from the brackets 06N-013.

(k) Remove the brackets 06N-013, 06N-017 from the aft side wall assembly 06N-010.

SUB TASK 25-41-51-010-033-G01
D2549030511600 D2549030512200 D2549030600000 D2549030604600

7. Removal of the Side Wall (06N-1)

NOTE: **See TABLE 3174 for the references for the replacement procedures of permanent installed parts.**

IPL FIG. ITEM	COMPONENT PART NAME	IPL FIG. ITEM	REPLACEMENT PART NAME	SEE REPAIR TASK
06N-001 06N-250	Side Wall Post Assembly	06N-270	Nut	Replacement of the Riveted Parts

Table 3174
Reference list for the replacement of permanent installed parts

(a) Remove and disassemble the handle assemblies 06N-120 as follows:

1 Remove the security pins 06N-140 from the handle assemblies 06N-120.

2 Remove the handle assemblies 06N-120 from the aft side wall assembly 06N-010.

3 Remove the special screws 06N-130 and the special washers 06N-150 from the aft side wall assembly 06N-010.

(b) Remove the studs 06N-240 and the washers 06N-230 from the cover oxygen container assy 06N-160.

(c) Remove the screws 06N-180, the nuts 06N-190 and the cover oxygen container assy 06N-160 from the angle 06N-170.

(d) Remove the screws 06N-220, the washers 06N-230 and the angle 06N-170 from the aft side wall assembly 06N-010.

(e) Remove the ground cable from the oxygen container assy 06N-210.

(f) Remove the screws 06N-220, the washers 06N-230 and the oxygen container assy 06N-210 from the angles 06N-200.

(g) Remove the screws 06N-220, the washers 06N-230 and the angles 06N-200 from the aft side wall assembly 06N-010.

(h) Remove the caps 06N-290, the screws 06N-280, 06N-300, the washers 06N-230 and the post assembly 06N-250.

(i) Disassemble the post assembly 06N-250 as follows:

1 Remove the screws 06N-260.

(j) Remove the screws 06N-030 and the fittings 06N-020 from the brackets 06N-013.

(k) Remove the brackets 06N-013, 06N-017 from the aft side wall assembly 06N-010.

SUB TASK 25-41-51-010-033-H01
D2549030507400 D2549030510200 D2549030600800 D2549030601600 D2549030603600 D2549030607800 R225401168-000 R225401168-004 R225401168-006 R225401168-014 R225401168-016 R225401168-018 R225401168-020 R225401168-028

8. Removal of the Side Wall (06N-1)

NOTE: **See TABLE 3175 for the references for the replacement procedures of permanent installed parts.**

IPL FIG. ITEM	COMPONENT PART NAME	IPL FIG. ITEM	REPLACEMENT PART NAME	SEE REPAIR TASK
06N-001 06N-250	Side Wall Post Assembly	06N-270	Nut	Replacement of the Riveted Parts

Table 3175
Reference list for the replacement of permanent installed parts

(a) Remove and disassemble the handle assemblies 06N-120 as follows:

1 Remove the security pins 06N-140 from the handle assemblies 06N-120.

2 Remove the handle assemblies 06N-120 from the aft side wall assembly 06N-010.

3 Remove the special screws 06N-130 and the special washers 06N-150 from the aft side wall assembly 06N-010.

(b) Remove the studs 06N-240 and the washers 06N-230 from the cover oxygen container assy 06N-160.

(c) Remove the screws 06N-180, the nuts 06N-190 and the cover oxygen container assy 06N-160 from the angle 06N-170.

(d) Remove the screws 06N-220, the washers 06N-230 and the angle 06N-170 from the aft side wall assembly 06N-010.

(e) Remove the ground cable from the oxygen container assy 06N-210.

(f) Remove the screws 06N-220, 06N-222, the washers 06N-230 and the oxygen container assy 06N-210 from the angles 06N-200.

(g) Remove the screws 06N-220, the washers 06N-230 and the angles 06N-200 from the aft side wall assembly 06N-010.

(h) Remove the caps 06N-290, the screws 06N-280, 06N-300, the washers 06N-230 and the post assembly 06N-250.

(i) Disassemble the post assembly 06N-250 as follows:

1 Remove the screws 06N-260.

(j) Remove the screws 06N-030 and the fittings 06N-020 from the brackets 06N-013.

(k) Remove the brackets 06N-013, 06N-017 from the aft side wall assembly 06N-010.

TASK 25-41-51-000-804-Q01

D2549010601600 D2549010602400 D2549010602600 D2549010606200 D2549020508800 D2549020512000 D2549020610600 D2549020702600 D2549020703400 D2549020704200 D2549020704400 D2549020705200 D2549020709800 D2549020711400 D2549020713200 D2549030512400 D2549030513000 D2549030513800 D2549030514200 D2549030514600 D2549030600600 D2549030601800 D2549030603800 D2549030604200 D2549030605600 D2549030605800 D2549030607400 D2549030608800 D2549030611200 R225401134-018 R225401137-010 R225401142-000 R225401142-002 R225401152-000 R225401152-002 R225401152-004 R225401152-006 R225401196-000 R225401196-002 R225401196-004 R225401196-034 R225401196-036 R225401196-046 R225401196-048 R225401196-050

34. Removal of the Side Wall

A. General

A complete disassembly of the component is not necessary and not recommended.

Do not disassemble the component more than it is necessary for:

- Cleaning
- Visual Inspection
- Replacement of defective parts.

B. Job Set-up Information

(1) Consumable Materials

REFERENCE	DESIGNATION
08-007	Sealant, High Temperature

Table 3176
Consumable Materials

(2) Fixtures, Tools, Test and Support Equipment

REFERENCE	DESIGNATION
	hot air blower

Table 3177
Fixtures, Tools, Test and Support Equipment

C. Procedure

WARNING: **BE CAREFUL WHEN YOU USE SOLVENTS/CLEANING AGENTS, SEALANTS AND OTHER MATERIALS. OBEY THE MATERIAL MANUFACTURER'S INSTRUCTIONS AND THE LOCAL REGULATIONS. MAKE SURE THAT THERE IS A GOOD FLOW OF AIR THROUGH THE WORK AREA. DO NOT BREATHE THE FUMES. DO NOT SMOKE. DO NOT USE THESE MATERIALS NEAR A FLAME, SPARKS OR SOURCES OF HEAT. USE PROTECTIVE CLOTHING, GOGGLES AND GLOVES. IF YOU GET ONE OF THESE MATERIALS ON YOUR SKIN OR IN YOUR EYES, FLUSH IT AWAY WITH A FLOW OF CLEAN WATER. IF YOU GET ONE OF THESE MATERIALS IN YOUR MOUTH, GET IMMEDIATE MEDICAL AID. IN GENERAL, THESE MATERIALS ARE POISONOUS, FLAMMABLE AND SKIN IRRITANTS.**

WARNING: **KEEP ALL HYDROCARBONS (FUELS, LUBRICANTS, ETC.) AWAY FROM ALL SOURCES OF OXYGEN. OXYGEN BECOMES EXPLOSIVE WHEN IT TOUCHES HYDROCARBONS.**

WARNING: **TO PREVENT CONTAMINATION OF THE OXYGEN SYSTEM, MAKE SURE THAT YOUR HANDS AND ALL THE TOOLS ARE CLEAN.**

CAUTION: **PUT DRY, CLEAN, METAL OR PLASTIC PLUGS ON ALL PIPES OR UNITS REMOVED TEMPORARILY. PUT EACH PIPE OR UNIT IN A SEALED VINYL BAG. UNWANTED MATERIALS IN THE OXYGEN SYSTEM CAN DAMAGE THE SYSTEM.**

CAUTION: **DO ALL THE WORK ON A CLEAN, SOFT SURFACE TO PREVENT DAMAGE TO THE COMPONENTS.**

SUB TASK 25-41-51-010-034-A01
D2549010606200

1. Removal of the Side Wall (06P-1)

NOTE: **See TABLE 3178 for the references for the replacement procedures of permanent installed parts.**

IPL FIG. ITEM	COMPONENT PART NAME	IPL FIG. ITEM	REPLACEMENT PART NAME	SEE REPAIR TASK
06P-001 06P-260	Side Wall Post Assembly	06P-280	Nut	Replacement of the Riveted Parts

Table 3178
Reference list for the replacement of permanent installed parts

(a) Remove and disassemble the handle assembly 06P-120 as follows:

1 Remove the security pins 06P-140 from the handle assembly 06P-120.

2 Remove the handle assembly 06P-120 from the aft side wall assembly 06P-010.

3 Remove the special screws 06P-130 and the special washers 06P-150 from the aft side wall assembly 06P-010.

(b) Remove the screws 06P-230, the washers 06P-241 and the support 06P-320 from the aft side wall assembly 06P-010.

(c) Remove the studs 06P-250 and the washers 06P-240 from the cover oxygen container assy 06P-160.

(d) Remove the screws 06P-180, the nuts 06P-190 and the cover oxygen container assy 06P-160 from the angle 06P-170.

(e) Remove the screws 06P-220, the washers 06P-240 and the angle 06P-170 from the aft side wall assembly 06P-010.

(f) Remove the ground cable from the oxygen container assy 06P-210.

(g) Remove the screws 06P-220, the washers 06P-240 and the oxygen container assy 06P-210 from the angles 06P-200.

(h) Remove the screws 06P-220, the washers 06P-240 and the angles 06P-200 from the aft side wall assembly 06P-010.

(i) Remove the screws 06P-470, the nuts 06P-480, the plates 06P-460 and the single door emergency unlocking device assembly 06P-390 from the post assembly 06P-260.

(j) Disassemble the single door emergency unlocking device assembly 06P-390 as follows:

WARNING: BE CAREFUL WHEN YOU USE MATERIAL NO. 08-007 SEALANT, HIGH TEMPERATURE. OBEY THE MATERIAL MANUFACTURER'S INSTRUCTIONS.

1 Remove the bolt 06P-450 and the emergency unlocking-device strike 06P-410 from the emergency unlocking-device housing 06P-400.

NOTE: If necessary use a hot air blower to heat up the Material No. 08-007 Sealant, High Temperature to remove the bolt 06P-450.

WARNING: **BE CAREFUL WHEN YOU USE MATERIAL NO. 08-007 SEALANT, HIGH TEMPERATURE. OBEY THE MATERIAL MANUFACTURER'S INSTRUCTIONS.**

2 Remove the pin 06P-430, the snap catch 06P-440 and the emergency unlocking-device pivot 06P-420 from the emergency unlocking-device housing 06P-400.

NOTE: **If necessary use a hot air blower to heat up the Material No. 08-007 Sealant, High Temperature to remove the snap catch 06P-440 and the pin 06P-430.**

(k) Remove the caps 06P-300, the screws 06P-290, 06P-310, the washers 06P-240 and the post assembly 06P-260.

(l) Disassemble the post assembly 06P-260 as follows:

1 Remove the screws 06P-270.

(m) Remove the screws 06P-030 and the fittings 06P-020 from the brackets 06P-013.

(n) Remove the brackets 06P-013, 06P-017 from the aft side wall assembly 06P-010.

SUB TASK 25-41-51-010-034-B01
D2549030514200 D2549030600600 D2549030605800

2. Removal of the Side Wall (06P-1)

NOTE: **See TABLE 3179 for the references for the replacement procedures of permanent installed parts.**

IPL FIG. ITEM	COMPONENT PART NAME	IPL FIG. ITEM	REPLACEMENT PART NAME	SEE REPAIR TASK
06P-001 06P-260	Side Wall Post Assembly	06P-280	Nut	Replacement of the Riveted Parts

Table 3179
Reference list for the replacement of permanent installed parts

(a) Remove and disassemble the handle assemblies 06P-350 as follows:

1 Remove the security pins 06P-370 from the handle assemblies 06P-350.

2 Remove the handle assemblies 06P-350 from the aft side wall assembly 06P-010.

3 Remove the special screws 06P-360 and the special washers 06P-380 from the aft side wall assembly 06P-010.

(b) Remove the toilet seat cover dispenser 06P-330 from the screws 06P-340.

(c) Remove the screws 06P-340 from the aft side wall assembly 06P-010.

(d) Remove the studs 06P-250 and the washers 06P-240 from the cover oxygen container assy 06P-160.

(e) Remove the screws 06P-180, the nuts 06P-190 and the cover oxygen container assy 06P-160 from the angle 06P-170.

(f) Remove the screws 06P-220, the washers 06P-240 and the angle 06P-170 from the aft side wall assembly 06P-010.

(g) Remove the ground cable from the oxygen container assy 06P-210.

(h) Remove the screws 06P-220, the washers 06P-240 and the oxygen container assy 06P-210 from the angles 06P-200.

(i) Remove the screws 06P-220, the washers 06P-240 and the angles 06P-200 from the aft side wall assembly 06P-010.

(j) Remove the caps 06P-300, the screws 06P-290, 06P-310, the washers 06P-240 and the post assembly 06P-260.

(k) Disassemble the post assembly 06P-260 as follows:

1 Remove the screws 06P-270.

(l) Remove the screws 06P-030 and the fittings 06P-020 from the brackets 06P-013.

(m) Remove the brackets 06P-013, 06P-017 from the aft side wall assembly 06P-010.

SUB TASK 25-41-51-010-034-C01
D2549010602600

3. Removal of the Side Wall (06P-1)

NOTE: **See TABLE 3180 for the references for the replacement procedures of permanent installed parts.**

IPL FIG. ITEM	COMPONENT PART NAME	IPL FIG. ITEM	REPLACEMENT PART NAME	SEE REPAIR TASK
06P-001 06P-260	Side Wall Post Assembly	06P-280	Nut	Replacement of the Riveted Parts

Table 3180
Reference list for the replacement of permanent installed parts

(a) Remove and disassemble the handle assemblies 06P-350 as follows:

1 Remove the security pins 06P-370 from the handle assemblies 06P-350.

2 Remove the handle assemblies 06P-350 from the aft side wall assembly 06P-010.

3 Remove the special screws 06P-360 and the special washers 06P-380 from the aft side wall assembly 06P-010.

(b) Remove the toilet seat cover dispenser 06P-330 from the screws 06P-340.

(c) Remove the screws 06P-340 from the aft side wall assembly 06P-010.

(d) Remove the studs 06P-250 and the washers 06P-240 from the cover oxygen container assy 06P-160.

(e) Remove the screws 06P-180, the nuts 06P-190 and the cover oxygen container assy 06P-160 from the angle 06P-170.

(f) Remove the screws 06P-220, the washers 06P-240 and the angle 06P-170 from the aft side wall assembly 06P-010.

(g) Remove the ground cable from the oxygen container assy 06P-210.

(h) Remove the screws 06P-220, the washers 06P-240 and the oxygen container assy 06P-210 from the angles 06P-200.

(i) Remove the screws 06P-220, the washers 06P-240 and the angles 06P-200 from the aft side wall assembly 06P-010.

(j) Remove the caps 06P-300, the screws 06P-290, 06P-310, the washers 06P-240 and the post assembly 06P-260.

(k) Disassemble the post assembly 06P-260 as follows:

1 Remove the screws 06P-270.

(l) Remove the screws 06P-030 and the fittings 06P-020 from the brackets 06P-013.

(m) Remove the brackets 06P-013, 06P-017 from the aft side wall assembly 06P-010.

SUB TASK 25-41-51-010-034-D01
D2549020704200 D2549020704400 D2549030513800 D2549030601800 D2549030603800 D2549030607400 D2549030608800 D2549030611200 R225401142-000 R225401142-002

4. Removal of the Side Wall (06P-1)

NOTE: **See TABLE 3181 for the references for the replacement procedures of permanent installed parts.**

IPL FIG. ITEM	COMPONENT PART NAME	IPL FIG. ITEM	REPLACEMENT PART NAME	SEE REPAIR TASK
06P-001 06P-260	Side Wall Post Assembly	06P-280	Nut	Replacement of the Riveted Parts

Table 3181
Reference list for the replacement of permanent installed parts

(a) Remove and disassemble the handle assembly 06P-120 as follows:

1 Remove the security pins 06P-140 from the handle assembly 06P-120.

2 Remove the handle assembly 06P-120 from the aft side wall assembly 06P-010.

3 Remove the special screws 06P-130 and the special washers 06P-150 from the aft side wall assembly 06P-010.

(b) Remove the screws 06P-230, the washers 06P-241 and the support 06P-320 from the aft side wall assembly 06P-010.

(c) Remove the toilet seat cover dispenser 06P-330 from the screws 06P-340.

(d) Remove the screws 06P-340 from the aft side wall assembly 06P-010.

(e) Remove the studs 06P-250 and the washers 06P-240 from the cover oxygen container assy 06P-160.

(f) Remove the screws 06P-180, the nuts 06P-190 and the cover oxygen container assy 06P-160 from the angle 06P-170.

(g) Remove the screws 06P-220, the washers 06P-240 and the angle 06P-170 from the aft side wall assembly 06P-010.

(h) Remove the ground cable from the oxygen container assy 06P-210.

(i) Remove the screws 06P-220, 06P-225, the washers 06P-240, 06P-245 and the oxygen container assy 06P-210 from the angles 06P-200.

(j) Remove the screws 06P-220, the washers 06P-240 and the angles 06P-200 from the aft side wall assembly 06P-010.

(k) Remove the caps 06P-300, the screws 06P-290, 06P-310, the washers 06P-240 and the post assembly 06P-260.

(l) Disassemble the post assembly 06P-260 as follows:

1 Remove the screws 06P-270.

(m) Remove the screws 06P-030 and the fittings 06P-020 from the brackets 06P-013.

(n) Remove the brackets 06P-013, 06P-017 from the aft side wall assembly 06P-010.

SUB TASK 25-41-51-010-034-E01

D2549020508800 D2549020512000 D2549020703400 D2549020705200 D2549020709800 D2549020711400 D2549020713200 D2549030513000 R225401134-018 R225401152-000 R225401152-002 R225401152-004 R225401152-006 R225401196-

000 R225401196-002 R225401196-004 R225401196-034 R225401196-036 R225401196-046 R225401196-048 R225401196-050

5. Removal of the Side Wall (06P-1)

NOTE: **See TABLE 3182 for the references for the replacement procedures of permanent installed parts.**

IPL FIG. ITEM	COMPONENT PART NAME	IPL FIG. ITEM	REPLACEMENT PART NAME	SEE REPAIR TASK
06P-001 06P-260	Side Wall Post Assembly	06P-280	Nut	Replacement of the Riveted Parts

Table 3182
Reference list for the replacement of permanent installed parts

(a) Remove and disassemble the handle assembly 06P-120 as follows:

1 Remove the security pins 06P-140 from the handle assembly 06P-120.

2 Remove the handle assembly 06P-120 from the aft side wall assembly 06P-010.

3 Remove the special screws 06P-130 and the special washers 06P-150 from the aft side wall assembly 06P-010.

(b) Remove the screws 06P-230, the washers 06P-241 and the support 06P-320 from the aft side wall assembly 06P-010.

(c) Remove the toilet seat cover dispenser 06P-330 from the screws 06P-340.

(d) Remove the screws 06P-340 from the aft side wall assembly 06P-010.

(e) Remove the studs 06P-250 and the washers 06P-240 from the cover oxygen container assy 06P-160.

(f) Remove the screws 06P-180, the nuts 06P-190 and the cover oxygen container assy 06P-160 from the angle 06P-170.

(g) Remove the screws 06P-220, the washers 06P-240 and the angle 06P-170 from the aft side wall assembly 06P-010.

(h) Remove the ground cable from the oxygen container assy 06P-210.

(i) Remove the screws 06P-220, 06P-225, the washers 06P-240 06P-245, and the oxygen container assy 06P-210 from the angles 06P-200.

(j) Remove the screws 06P-220, the washers 06P-240 and the angles 06P-200 from the aft side wall assembly 06P-010.

(k) Remove the caps 06P-300, the screws 06P-290, 06P-310, the washers 06P-240 and the post assembly 06P-260.

(l) Disassemble the post assembly 06P-260 as follows:

1 Remove the screws 06P-270.

(m) Remove the screws 06P-030 and the fittings 06P-020 from the brackets 06P-013.

(n) Remove the brackets 06P-013, 06P-017 from the aft side wall assembly 06P-010.

(o) Remove the bushings 06P-385.

(p) If necessary, remove the kick strip 06P-490 from the aft side wall assembly 06P-010.

SUB TASK 25-41-51-010-034-F01
D2549020610600 R225401137-010

6. Removal of the Side Wall (06P-1)

NOTE: **See TABLE 3183 for the references for the replacement procedures of permanent installed parts.**

IPL FIG. ITEM	COMPONENT PART NAME	IPL FIG. ITEM	REPLACEMENT PART NAME	SEE REPAIR TASK
06P-001 06P-260	Side Wall Post Assembly	06P-280	Nut	Replacement of the Riveted Parts

Table 3183
Reference list for the replacement of permanent installed parts

(a) Remove and disassemble the handle assembly 06P-120 as follows:

1 Remove the security pins 06P-140 from the handle assembly 06P-120.

2 Remove the handle assembly 06P-120 from the aft side wall assembly 06P-010.

3 Remove the special screws 06P-130 and the special washers 06P-150 from the aft side wall assembly 06P-010.

(b) Remove the toilet seat cover dispenser 06P-330 from the screws 06P-340.

(c) Remove the screws 06P-340 from the aft side wall assembly 06P-010.

(d) Remove the studs 06P-250 and the washers 06P-240 from the cover oxygen container assy 06P-160.

(e) Remove the screws 06P-180, the nuts 06P-190 and the cover oxygen container assy 06P-160 from the angle 06P-170.

(f) Remove the screws 06P-220, the washers 06P-240 and the angle 06P-170 from the aft side wall assembly 06P-010.

(g) Remove the ground cable from the oxygen container assy 06P-210.

(h) Remove the screws 06P-220, the washers 06P-240 and the oxygen container assy 06P-210 from the angles 06P-200.

(i) Remove the screws 06P-220, the washers 06P-240 and the angles 06P-200 from the aft side wall assembly 06P-010.

(j) Remove the caps 06P-300, the screws 06P-290, 06P-310, the washers 06P-240 and the post assembly 06P-260.

(k) Disassemble the post assembly 06P-260 as follows:

1 Remove the screws 06P-270.

(l) Remove the screws 06P-030 and the fittings 06P-020 from the brackets 06P-013.

(m) Remove the brackets 06P-013, 06P-017 from the aft side wall assembly 06P-010.

SUB TASK 25-41-51-010-034-G01
D2549010601600 D2549010602400 D2549030512400

7. Removal of the Side Wall (06P-1)

NOTE: **See TABLE 3184 for the references for the replacement procedures of permanent installed parts.**

IPL FIG. ITEM	COMPONENT PART NAME	IPL FIG. ITEM	REPLACEMENT PART NAME	SEE REPAIR TASK
06P-001 06P-260	Side Wall Post Assembly	06P-280	Nut	Replacement of the Riveted Parts

Table 3184
Reference list for the replacement of permanent installed parts

(a) Remove and disassemble the handle assembly 06P-120 as follows:

1 Remove the security pins 06P-140 from the handle assembly 06P-120.

2 Remove the handle assembly 06P-120 from the aft side wall assembly 06P-010.

3 Remove the special screws 06P-130 and the special washers 06P-150 from the aft side wall assembly 06P-010.

(b) Remove the screws 06P-230, the washers 06P-241 and the support 06P-320 from the aft side wall assembly 06P-010.

(c) Remove the studs 06P-250 and the washers 06P-240 from the cover oxygen container assy 06P-160.

(d) Remove the screws 06P-180, the nuts 06P-190 and the cover oxygen container assy 06P-160 from the angle 06P-170.

(e) Remove the screws 06P-220, the washers 06P-240 and the angle 06P-170 from the aft side wall assembly 06P-010.

(f) Remove the ground cable from the oxygen container assy 06P-210.

(g) Remove the screws 06P-220, the washers 06P-240 and the oxygen container assy 06P-210 from the angles 06P-200.

(h) Remove the screws 06P-220, the washers 06P-240 and the angles 06P-200 from the aft side wall assembly 06P-010.

(i) Remove the caps 06P-300, the screws 06P-290, 06P-310, the washers 06P-240 and the post assembly 06P-260.

(j) Disassemble the post assembly 06P-260 as follows:

1 Remove the screws 06P-270.

(k) Remove the screws 06P-030 and the fittings 06P-020 from the brackets 06P-013.

(l) Remove the brackets 06P-013, 06P-017 from the aft side wall assembly 06P-010.

SUB TASK 25-41-51-010-034-H01
D2549020702600 D2549030514600 D2549030604200 D2549030605600

8. Removal of the Side Wall (06P-1)

NOTE: **See TABLE 3185 for the references for the replacement procedures of permanent installed parts.**

IPL FIG. ITEM	COMPONENT PART NAME	IPL FIG. ITEM	REPLACEMENT PART NAME	SEE REPAIR TASK
06P-001 06P-260	Side Wall Post Assembly	06P-280	Nut	Replacement of the Riveted Parts

Table 3185
Reference list for the replacement of permanent installed parts

(a) Remove and disassemble the handle assembly 06P-120 as follows:

1 Remove the security pins 06P-140 from the handle assembly 06P-120.

2 Remove the handle assembly 06P-120 from the aft side wall assembly 06P-010.

3 Remove the special screws 06P-130 and the special washers 06P-150 from the aft side wall assembly 06P-010.

(b) Remove the screws 06P-230, the washers 06P-241 and the support 06P-320 from the aft side wall assembly 06P-010.

(c) Remove the studs 06P-250 and the washers 06P-240 from the cover oxygen container assy 06P-160.

(d) Remove the screws 06P-180, the nuts 06P-190 and the cover oxygen container assy 06P-160 from the angle 06P-170.

(e) Remove the screws 06P-220, the washers 06P-240 and the angle 06P-170 from the aft side wall assembly 06P-010.

(f) Remove the ground cable from the oxygen container assy 06P-210.

(g) Remove the screws 06P-220, the washers 06P-240 and the oxygen container assy 06P-210 from the angles 06P-200.

(h) Remove the screws 06P-220, the washers 06P-240 and the angles 06P-200 from the aft side wall assembly 06P-010.

(i) Remove the caps 06P-300, the screws 06P-290, 06P-310, the washers 06P-240 and the post assembly 06P-260.

(j) Disassemble the post assembly 06P-260 as follows:

1 Remove the screws 06P-270.

(k) Remove the screws 06P-030 and the fittings 06P-020 from the brackets 06P-013.

(l) Remove the brackets 06P-013, 06P-017 from the aft side wall assembly 06P-010.

TASK 25-41-51-000-804-R01

D2549010600800 D2549010603600 D2549010607400 D2549020502200 D2549020507600 D2549020507800 D2549020511000 D2549020512200 D2549020702200 D2549020704800 D2549020705000 D2549020707200 D2549020707600 D2549020708400 D2549020708600 D2549020708800 D2549020710000 D2549020710800 D2549020712400 D2549020712800 D2549020713400 D2549020812800 D2549030510400 D2549030601400 D2549030602200 D2549030604400 D2549030608200 R225401160-000 R225401195-000

35. Removal of the Side Wall

A. General

A complete disassembly of the component is not necessary and not recommended.

Do not disassemble the component more than it is necessary for:

- Cleaning
- Visual Inspection
- Replacement of defective parts.

B. Job Set-up Information
(1) Consumable Materials

REFERENCE	DESIGNATION
08-017A	Adhesive Structuralflexible

Table 3186
Consumable Materials

C. Procedure

WARNING: BE CAREFUL WHEN YOU USE SOLVENTS/CLEANING AGENTS, SEALANTS AND OTHER MATERIALS. OBEY THE MATERIAL MANUFACTURER'S INSTRUCTIONS AND THE LOCAL REGULATIONS. MAKE SURE THAT THERE IS A GOOD FLOW OF AIR THROUGH THE WORK AREA. DO NOT BREATHE THE FUMES. DO NOT SMOKE. DO NOT USE THESE MATERIALS NEAR A FLAME, SPARKS OR SOURCES OF HEAT. USE PROTECTIVE CLOTHING, GOGGLES AND GLOVES. IF YOU GET ONE OF THESE MATERIALS ON YOUR SKIN OR IN YOUR EYES, FLUSH IT AWAY WITH A FLOW OF CLEAN WATER. IF YOU GET ONE OF THESE MATERIALS IN YOUR MOUTH, GET IMMEDIATE MEDICAL AID. IN GENERAL, THESE MATERIALS ARE POISONOUS, FLAMMABLE AND SKIN IRRITANTS.

WARNING: **KEEP ALL HYDROCARBONS (FUELS, LUBRICANTS, ETC.) AWAY FROM ALL SOURCES OF OXYGEN. OXYGEN BECOMES EXPLOSIVE WHEN IT TOUCHES HYDROCARBONS.**

WARNING: **TO PREVENT CONTAMINATION OF THE OXYGEN SYSTEM, MAKE SURE THAT YOUR HANDS AND ALL THE TOOLS ARE CLEAN.**

CAUTION: **PUT DRY, CLEAN, METAL OR PLASTIC PLUGS ON ALL PIPES OR UNITS REMOVED TEMPORARILY. PUT EACH PIPE OR UNIT IN A SEALED VINYL BAG. UNWANTED MATERIALS IN THE OXYGEN SYSTEM CAN DAMAGE THE SYSTEM.**

CAUTION: **DO ALL THE WORK ON A CLEAN, SOFT SURFACE TO PREVENT DAMAGE TO THE COMPONENTS.**

SUB TASK 25-41-51-010-035-A01
D2549020708800

1. Removal of the Side Wall (06Q-1)

NOTE: **See TABLE 3187 for the references for the replacement procedures of permanent installed parts.**
More data for bonded parts are given in column SEE REPAIR TASK. Use the data for the selection of the related repair solution.

IPL FIG. ITEM	COMPONENT PART NAME	IPL FIG. ITEM	REPLACEMENT PART NAME	SEE REPAIR TASK
06Q-001 06Q-260	Side Wall Post Assembly	06Q-280	Nut	Replacement of the Riveted Parts
06Q-001	Side Wall	06Q-400	Reinforcing Strip	Replacement of the Bonded Parts Material No. 08-017A Adhesive Structuralflexible

Table 3187
Reference list for the replacement of permanent installed parts

(a) Remove and disassemble the handle assemblies 06Q-350 as follows:

1 Remove the security pins 06Q-370 from the handle assemblies 06Q-350.

2 Remove the handle assemblies 06Q-350 from the aft side wall assembly 06Q-010.

3 Remove the special screws 06Q-360 and the special washers 06Q-380 from the aft side wall assembly 06Q-010.

(b) Remove the toilet seat cover dispenser 06Q-330 from the screws 06Q-340.

(c) Remove the screws 06Q-340 from the aft side wall assembly 06Q-010.

(d) Remove the studs 06Q-250 and the washers 06Q-240 from the cover oxygen container assy 06Q-160.

(e) Remove the screws 06Q-180, the nuts 06Q-190 and the cover oxygen container assy 06Q-160 from the angle 06Q-170.

(f) Remove the screws 06Q-220, the washers 06Q-240 and the angle 06Q-170 from the aft side wall assembly 06Q-010.

(g) Remove the ground cable from the oxygen container assy 06Q-210.

(h) Remove the screws 06Q-220, the washers 06Q-240 and the oxygen container assy 06Q-210 from the angles 06Q-200.

(i) Remove the screws 06Q-220, the washers 06Q-240 and the angles 06Q-200 from the aft side wall assembly 06Q-010.

(j) Remove the screws 06Q-290, the washers 06Q-240 and the angle 06Q-410 from the lavatory structure.

(k) Remove the caps 06Q-300, the screws 06Q-290, 06Q-310, the washers 06Q-240 and the post assembly 06Q-260.

(l) Disassemble the post assembly 06Q-260 as follows:

1 Remove the screws 06Q-270.

(m) Remove the screws 06Q-030, 06Q-035 and the fittings 06Q-020, 06Q-025 from the brackets 06Q-013.

(n) Remove the brackets 06Q-013, 06Q-017 from the aft side wall assembly 06Q-010.

SUB TASK 25-41-51-010-035-B01
D2549020702200

2. Removal of the Side Wall (06Q-1)

NOTE: **See TABLE 3188 for the references for the replacement procedures of permanent installed parts.**

IPL FIG. ITEM	COMPONENT PART NAME	IPL FIG. ITEM	REPLACEMENT PART NAME	SEE REPAIR TASK
06Q-001 06Q-260	Side Wall Post Assembly	06Q-280	Nut	Replacement of the Riveted Parts

Table 3188
Reference list for the replacement of permanent installed parts

(a) Remove and disassemble the handle assembly 06Q-120 as follows:

1 Remove the security pins 06Q-140 from the handle assembly 06Q-120.

2 Remove the handle assembly 06Q-120 from the aft side wall assembly 06Q-010.

3 Remove the special screws 06Q-130 and the special washers 06Q-150 from the aft side wall assembly 06Q-010.

(b) Remove the screws 06Q-230, the washers 06Q-241 and the support 06Q-320 from the aft side wall assembly 06Q-010.

(c) Remove the toilet seat cover dispenser 06Q-330 from the screws 06Q-340.

(d) Remove the screws 06Q-340 from the aft side wall assembly 06Q-010.

(e) Remove the studs 06Q-250 and the washers 06Q-240 from the cover oxygen container assy 06Q-160.

(f) Remove the screws 06Q-180, the nuts 06Q-190 and the cover oxygen container assy 06Q-160 from the angle 06Q-170.

(g) Remove the screws 06Q-220, the washers 06Q-240 and the angle 06Q-170 from the aft side wall assembly 06Q-010.

(h) Remove the ground cable from the oxygen container assy 06Q-210.

(i) Remove the screws 06Q-220, the washers 06Q-240 and the oxygen container assy 06Q-210 from the angles 06Q-200.

(j) Remove the screws 06Q-220, the washers 06Q-240 and the angles 06Q-200 from the aft side wall assembly 06Q-010.

(k) Remove the screws 06Q-290, the washers 06Q-240 and the angle 06Q-410 from the lavatory structure.

(l) Remove the caps 06Q-300, the screws 06Q-290, 06Q-310, the washers 06Q-240 and the post assembly 06Q-260.

(m) Disassemble the post assembly 06Q-260 as follows:

1 Remove the screws 06Q-270.

(n) Remove the screws 06Q-030, 06Q-035 and the fittings 06Q-020, 06Q-025 from the brackets 06Q-013.

(o) Remove the brackets 06Q-013, 06Q-017 from the aft side wall assembly 06Q-010.

SUB TASK 25-41-51-010-035-C01
D2549010607400 D2549020707600 D2549030601400 D2549030602200 D2549030604400 D2549030608200 R225401160-000

3. Removal of the Side Wall (06Q-1)

NOTE: **See TABLE 3189 for the references for the replacement procedures of permanent installed parts.**

IPL FIG. ITEM	COMPONENT PART NAME	IPL FIG. ITEM	REPLACEMENT PART NAME	SEE REPAIR TASK
06Q-001 06Q-260	Side Wall Post Assembly	06Q-280	Nut	Replacement of the Riveted Parts

Table 3189
Reference list for the replacement of permanent installed parts

(a) Remove and disassemble the handle assemblies 06Q-350 as follows:

1 Remove the security pins 06Q-370 from the handle assemblies 06Q-350.

2 Remove the handle assemblies 06Q-350 from the aft side wall assembly 06Q-010.

3 Remove the special screws 06Q-360 and the special washers 06Q-380 from the aft side wall assembly 06Q-010.

(b) Remove the toilet seat cover dispenser 06Q-330 from the screws 06Q-345.

(c) Remove the screws 06Q-345 and the washers 06Q-390 from the aft side wall assembly 06Q-010.

(d) Remove the studs 06Q-250 and the washers 06Q-240 from the cover oxygen container assy 06Q-160.

(e) Remove the screws 06Q-180, the nuts 06Q-190 and the cover oxygen container assy 06Q-160 from the angle 06Q-170.

(f) Remove the screws 06Q-220, the washers 06Q-240 and the angle 06Q-170 from the aft side wall assembly 06Q-010.

(g) Remove the ground cable from the oxygen container assy 06Q-210.

(h) Remove the screws 06Q-220, 06Q-222, the washers 06Q-240 and the oxygen container assy 06Q-210 from the angles 06Q-200.

(i) Remove the screws 06Q-220, the washers 06Q-240 and the angles 06Q-200 from the aft side wall assembly 06Q-010.

(j) Remove the screws 06Q-290, the washers 06Q-240 and the angle 06Q-410 from the lavatory structure.

(k) Remove the caps 06Q-300, the screws 06Q-290, 06Q-310, the washers 06Q-240 and the post assembly 06Q-260.

(l) Disassemble the post assembly 06Q-260 as follows:

1 Remove the screws 06Q-270.

(m) Remove the screws 06Q-030, 06Q-035 and the fittings 06Q-020, 06Q-025 from the brackets 06Q-013.

(n) Remove the brackets 06Q-013, 06Q-017 from the aft side wall assembly 06Q-010.

SUB TASK 25-41-51-010-035-D01
D2549010603600 D2549020512200 D2549020704800 D2549020705000 D2549020710000 D2549020712400 D2549020712800 D2549030510400 R225401195-000

4. Removal of the Side Wall (06Q-1)

NOTE: **See TABLE 3190 for the references for the replacement procedures of permanent installed parts.**

IPL FIG. ITEM	COMPONENT PART NAME	IPL FIG. ITEM	REPLACE-MENT PART NAME	SEE REPAIR TASK
06Q-001 06Q-260	Side Wall Post Assembly	06Q-280	Nut	Replacement of the Riveted Parts

Table 3190
Reference list for the replacement of permanent installed parts

(a) Remove and disassemble the handle assemblies 06Q-350 as follows:

1 Remove the security pins 06Q-370 from the handle assemblies 06Q-350.

2 Remove the handle assemblies 06Q-350 from the aft side wall assembly 06Q-010.

3 Remove the special screws 06Q-360 and the special washers 06Q-380 from the aft side wall assembly 06Q-010.

(b) Remove the toilet seat cover dispenser 06Q-330 from the screws 06Q-340.

(c) Remove the screws 06Q-340 from the aft side wall assembly 06Q-010.

(d) Remove the studs 06Q-250 and the washers 06Q-240 from the cover oxygen container assy 06Q-160.

(e) Remove the screws 06Q-180, the nuts 06Q-190 and the cover oxygen container assy 06Q-160 from the angle 06Q-170.

(f) Remove the screws 06Q-220, the washers 06Q-240 and the angle 06Q-170 from the aft side wall assembly 06Q-010.

(g) Remove the ground cable from the oxygen container assy 06Q-210.

(h) Remove the screws 06Q-220, 06Q-222, the washers 06Q-240 and the oxygen container assy 06Q-210 from the angles 06Q-200.

(i) Remove the screws 06Q-220, the washers 06Q-240 and the angles 06Q-200 from the aft side wall assembly 06Q-010.

(j) Remove the screws 06Q-290, the washers 06Q-240 and the angle 06Q-410 from the lavatory structure.

(k) Remove the caps 06Q-300, the screws 06Q-290, 06Q-310, the washers 06Q-240 and the post assembly 06Q-260.

(l) Disassemble the post assembly 06Q-260 as follows:

1 Remove the screws 06Q-270.

(m) Remove the screws 06Q-030, 06Q-035 and the fittings 06Q-020, 06Q-025 from the brackets 06Q-013.

(n) Remove the brackets 06Q-013, 06Q-017 from the aft side wall assembly 06Q-010.

SUB TASK 25-41-51-010-035-E01
D2549020507800 D2549020708400 D2549020812800

5. Removal of the Side Wall (06Q-1)

NOTE: **See TABLE 3191 for the references for the replacement procedures of permanent installed parts.**

IPL FIG. ITEM	COMPONENT PART NAME	IPL FIG. ITEM	REPLACEMENT PART NAME	SEE REPAIR TASK
06Q-001 06Q-260	Side Wall Post Assembly	06Q-280	Nut	Replacement of the Riveted Parts

Table 3191
Reference list for the replacement of permanent installed parts

(a) Remove and disassemble the handle assemblies 06Q-350 as follows:

1 Remove the security pins 06Q-370 from the handle assemblies 06Q-350.

2 Remove the handle assemblies 06Q-350 from the aft side wall assembly 06Q-010.

3 Remove the special screws 06Q-360 and the special washers 06Q-380 from the aft side wall assembly 06Q-010.

(b) Remove the toilet seat cover dispenser 06Q-330 from the screws 06Q-340.

(c) Remove the screws 06Q-340 from the aft side wall assembly 06Q-010.

(d) Remove the studs 06Q-250 and the washers 06Q-240 from the cover oxygen container assy 06Q-160.

(e) Remove the screws 06Q-180, the nuts 06Q-190 and the cover oxygen container assy 06Q-160 from the angle 06Q-170.

(f) Remove the screws 06Q-220, the washers 06Q-240 and the angle 06Q-170 from the aft side wall assembly 06Q-010.

(g) Remove the ground cable from the oxygen container assy 06Q-210.

(h) Remove the screws 06Q-220, the washers 06Q-240 and the oxygen container assy 06Q-210 from the angles 06Q-200.

(i) Remove the screws 06Q-220, the washers 06Q-240 and the angles 06Q-200 from the aft side wall assembly 06Q-010.

(j) Remove the screws 06Q-290, the washers 06Q-240 and the angle 06Q-410 from the lavatory structure.

(k) Remove the caps 06Q-300, the screws 06Q-290, 06Q-310, the washers 06Q-240 and the post assembly 06Q-260.

(l) Disassemble the post assembly 06Q-260 as follows:

1 Remove the screws 06Q-270.

(m) Remove the screws 06Q-030, 06Q-035 and the fitting 06Q-020 from the aft side wall assembly 06Q-010.

SUB TASK 25-41-51-010-035-F01
D2549020507600 D2549020707200 D2549020708600

6. Removal of the Side Wall (06Q-1)

NOTE: **See TABLE 3192 for the references for the replacement procedures of permanent installed parts.**

IPL FIG. ITEM	COMPONENT PART NAME	IPL FIG. ITEM	REPLACEMENT PART NAME	SEE REPAIR TASK
06Q-001 06Q-260	Side Wall Post Assembly	06Q-280	Nut	Replacement of the Riveted Parts

Table 3192
Reference list for the replacement of permanent installed parts

(a) Remove and disassemble the handle assemblies 06Q-350 as follows:

1 Remove the security pins 06Q-370 from the handle assemblies 06Q-350.

2 Remove the handle assemblies 06Q-350 from the aft side wall assembly 06Q-010.

3 Remove the special screws 06Q-360 and the special washers 06Q-380 from the aft side wall assembly 06Q-010.

(b) Remove the studs 06Q-250 and the washers 06Q-240 from the cover oxygen container assy 06Q-160.

(c) Remove the screws 06Q-180, the nuts 06Q-190 and the cover oxygen container assy 06Q-160 from the angle 06Q-170.

(d) Remove the screws 06Q-220, the washers 06Q-240 and the angle 06Q-170 from the aft side wall assembly 06Q-010.

(e) Remove the ground cable from the oxygen container assy 06Q-210.

(f) Remove the screws 06Q-220, the washers 06Q-240 and the oxygen container assy 06Q-210 from the angles 06Q-200.

(g) Remove the screws 06Q-220, the washers 06Q-240 and the angles 06Q-200 from the aft side wall assembly 06Q-010.

(h) Remove the screws 06Q-290, the washers 06Q-240 and the angle 06Q-410 from the lavatory structure.

(i) Remove the caps 06Q-300, the screws 06Q-290, 06Q-310, the washers 06Q-240 and the post assembly 06Q-260.

(j) Disassemble the post assembly 06Q-260 as follows:

1 Remove the screws 06Q-270.

(k) Remove the screws 06Q-030, 06Q-035 and the fittings 06Q-020, 06Q-025 from the brackets 06Q-013.

(l) Remove the brackets 06Q-013, 06Q-017 from the aft side wall assembly 06Q-010.

SUB TASK 25-41-51-010-035-G01
D2549010600800 D2549020502200 D2549020511000 D2549020710800 D2549020713400

7. Removal of the Side Wall (06Q-1)

NOTE: **See TABLE 3193 for the references for the replacement procedures of permanent installed parts.**

IPL FIG. ITEM	COMPONENT PART NAME	IPL FIG. ITEM	REPLACEMENT PART NAME	SEE REPAIR TASK
06Q-001 06Q-260	Side Wall Post Assembly	06Q-280	Nut	Replacement of the Riveted Parts

Table 3193
Reference list for the replacement of permanent installed parts

(a) Remove and disassemble the handle assemblies 06Q-350 as follows:

1 Remove the security pins 06Q-370 from the handle assemblies 06Q-350.

2 Remove the handle assemblies 06Q-350 from the aft side wall assembly 06Q-010.

3 Remove the special screws 06Q-360 and the special washers 06Q-380 from the aft side wall assembly 06Q-010.

(b) Remove the studs 06Q-250 and the washers 06Q-240 from the cover oxygen container assy 06Q-160.

(c) Remove the screws 06Q-180, the nuts 06Q-190 and the cover oxygen container assy 06Q-160 from the angle 06Q-170.

(d) Remove the screws 06Q-220, the washers 06Q-240 and the angle 06Q-170 from the aft side wall assembly 06Q-010.

(e) Remove the ground cable from the oxygen container assy 06Q-210.

(f) Remove the screws 06Q-220, the washers 06Q-240 and the oxygen container assy 06Q-210 from the angles 06Q-200.

(g) Remove the screws 06Q-220, the washers 06Q-240 and the angles 06Q-200 from the aft side wall assembly 06Q-010.

(h) Remove the screws 06Q-290, the washers 06Q-240 and the angle 06Q-410 from the lavatory structure.

(i) Remove the caps 06Q-300, the screws 06Q-290, 06Q-310, the washers 06Q-240 and the post assembly 06Q-260.

(j) Disassemble the post assembly 06Q-260 as follows:

1 Remove the screws 06Q-270.

(k) Remove the screws 06Q-030, 06Q-035 and the fittings 06Q-020, 06Q-025 from the brackets 06Q-013.

(l) Remove the brackets 06Q-013, 06Q-017 from the aft side wall assembly 06Q-010.

TASK 25-41-51-000-804-S01
D2549010605600 D2549010609800 D2549010611800 D2549020404800 D2549020405000 D2549020514800 D2549020805000 D2549020808200 D2549020809800 D2549020814200 D2549030602400 D2549030606400

36. Removal of the Side Wall

A. General

A complete disassembly of the component is not necessary and not recommended.

Do not disassemble the component more than it is necessary for:

- Cleaning
- Visual Inspection
- Replacement of defective parts.

B. Job Set-up Information

(1) Not applicable

C. Procedure

WARNING: BE CAREFUL WHEN YOU USE SOLVENTS/CLEANING AGENTS, SEALANTS AND OTHER MATERIALS. OBEY THE MATERIAL MANUFACTURER'S INSTRUCTIONS AND THE LOCAL REGULATIONS. MAKE SURE THAT THERE IS A GOOD FLOW OF AIR THROUGH THE WORK AREA. DO NOT BREATHE THE FUMES. DO NOT SMOKE. DO NOT USE THESE MATERIALS NEAR A FLAME, SPARKS OR SOURCES OF HEAT. USE PROTECTIVE CLOTHING, GOGGLES AND GLOVES. IF YOU GET ONE OF THESE MATERIALS ON YOUR SKIN OR IN YOUR EYES, FLUSH IT AWAY WITH A FLOW OF CLEAN WATER. IF YOU GET ONE OF THESE MATERIALS IN YOUR MOUTH, GET IMMEDIATE MEDICAL AID. IN GENERAL, THESE MATERIALS ARE POISONOUS, FLAMMABLE AND SKIN IRRITANTS.

WARNING: KEEP ALL HYDROCARBONS (FUELS, LUBRICANTS, ETC.) AWAY FROM ALL SOURCES OF OXYGEN. OXYGEN BECOMES EXPLOSIVE WHEN IT TOUCHES HYDROCARBONS.

WARNING: TO PREVENT CONTAMINATION OF THE OXYGEN SYSTEM, MAKE SURE THAT YOUR HANDS AND ALL THE TOOLS ARE CLEAN.

CAUTION: **PUT DRY, CLEAN, METAL OR PLASTIC PLUGS ON ALL PIPES OR UNITS REMOVED TEMPORARILY. PUT EACH PIPE OR UNIT IN A SEALED VINYL BAG. UNWANTED MATERIALS IN THE OXYGEN SYSTEM CAN DAMAGE THE SYSTEM.**

CAUTION: **DO ALL THE WORK ON A CLEAN, SOFT SURFACE TO PREVENT DAMAGE TO THE COMPONENTS.**

SUB TASK 25-41-51-010-036-A01
D2549010605600 D2549030602400 D2549030606400

1. Removal of the Side Wall (06R-1)

NOTE: **See TABLE 3194 for the references for the replacement procedures of permanent installed parts.**

IPL FIG. ITEM	COMPONENT PART NAME	IPL FIG. ITEM	REPLACEMENT PART NAME	SEE REPAIR TASK
06R-001 06R-250	Side Wall Post Assembly	06R-270	Nut	Replacement of the Riveted Parts

Table 3194
Reference list for the replacement of permanent installed parts

(a) Remove and disassemble the handle assemblies 06R-120 as follows:

1 Remove the security pins 06R-140 from the handle assemblies 06R-120.

2 Remove the handle assemblies 06R-120 from the aft side wall assembly 06R-010.

3 Remove the special screws 06R-130 and the special washers 06R-150 from the aft side wall assembly 06R-010.

(b) Remove the screws 06R-320 and the lavatory picture frame kit 06R-310 from the aft side wall assembly 06R-010.

(c) Remove the studs 06R-240 and the washers 06R-230 from the cover oxygen container assy 06R-160.

(d) Remove the screws 06R-180, the nuts 06R-190 and the cover oxygen container assy 06R-160 from the angle 06R-170.

(e) Remove the screws 06R-220, the washers 06R-230 and the angle 06R-170 from the aft side wall assembly 06R-010.

(f) Remove the ground cable from the oxygen container assy 06R-210.

(g) Remove the screws 06R-220, the washers 06R-230 and the oxygen container assy 06R-210 from the angles 06R-200.

(h) Remove the screws 06R-220, the washers 06R-230 and the angles 06R-200 from the aft side wall assembly 06R-010.

(i) Remove the caps 06R-290, the screws 06R-280, 06R-300, the washers 06R-230 and the post assembly 06R-250.

(j) Disassemble the post assembly 06R-250 as follows:

1 Remove the screws 06R-260.

(k) Remove the screws 06R-030 and the fittings 06R-020 from the brackets 06R-013.

(l) Remove the brackets 06R-013, 06R-017 from the aft side wall assembly 06R-010.

SUB TASK 25-41-51-010-036-B01
D2549010609800

2. Removal of the Side Wall (06R-1)

NOTE: **See TABLE 3195 for the references for the replacement procedures of permanent installed parts.**

IPL FIG. ITEM	COMPONENT PART NAME	IPL FIG. ITEM	REPLACEMENT PART NAME	SEE REPAIR TASK
06R-001 06R-250	Side Wall Post Assembly	06R-270	Nut	Replacement of the Riveted Parts

Table 3195
Reference list for the replacement of permanent installed parts

(a) Remove and disassemble the handle assembly 06R-340 as follows:

1 Remove the security pins 06R-360 from the handle assembly 06R-340.

2 Remove the handle assembly 06R-340 from the aft side wall assembly 06R-010.

3 Remove the special screws 06R-350 and the special washers 06R-370 from the aft side wall assembly 06R-010.

(b) Remove the screws 06R-410, the washers 06R-231 and the support 06R-330 from the aft side wall assembly 06R-010.

(c) Remove the screws 06R-320 and the lavatory picture frame kit 06R-310 from the aft side wall assembly 06R-010.

(d) Remove the studs 06R-240 and the washers 06R-230 from the cover oxygen container assy 06R-160.

(e) Remove the screws 06R-180, the nuts 06R-190 and the cover oxygen container assy 06R-160 from the angle 06R-170.

(f) Remove the screws 06R-220, the washers 06R-230 and the angle 06R-170 from the aft side wall assembly 06R-010.

(g) Remove the ground cable from the oxygen container assy 06R-210.

(h) Remove the screws 06R-220, the washers 06R-230 and the oxygen container assy 06R-210 from the angles 06R-200.

(i) Remove the screws 06R-220, the washers 06R-230 and the angles 06R-200 from the aft side wall assembly 06R-010.

(j) Remove the screws 06R-390, the washers 06R-400 and the angle 06R-380 from the aft side wall assembly 06R-010.

(k) Remove the caps 06R-290, the screws 06R-280, 06R-300, the washers 06R-230 and the post assembly 06R-250.

(l) Disassemble the post assembly 06R-250 as follows:

1 Remove the screws 06R-260.

(m) Remove the screws 06R-030 and the fittings 06R-020 from the aft side wall assembly 06R-010.

SUB TASK 25-41-51-010-036-C01
D2549020404800 D2549020405000 D2549020514800 D2549020805000 D2549020808200 D2549020809800 D2549020814200

3. Removal of the Side Wall (06R-1)

NOTE: **See TABLE 3196 for the references for the replacement procedures of permanent installed parts.**

IPL FIG. ITEM	COMPONENT PART NAME	IPL FIG. ITEM	REPLACEMENT PART NAME	SEE REPAIR TASK
06R-001 06R-250	Side Wall Post Assembly	06R-270	Nut	Replacement of the Riveted Parts

Table 3196
Reference list for the replacement of permanent installed parts

(a) Remove and disassemble the handle assemblies 06R-120 as follows:

1 Remove the security pins 06R-140 from the handle assemblies 06R-120.

2 Remove the handle assemblies 06R-120 from the aft side wall assembly 06R-010.

3 Remove the special screws 06R-130 and the special washers 06R-150 from the aft side wall assembly 06R-010.

(b) Remove the screws 06R-320 and the lavatory picture frame kit 06R-310 from the aft side wall assembly 06R-010.

(c) Remove the studs 06R-240 and the washers 06R-230 from the cover oxygen container assy 06R-160.

(d) Remove the screws 06R-180, the nuts 06R-190 and the cover oxygen container assy 06R-160 from the angle 06R-170.

(e) Remove the screws 06R-220, the washers 06R-230 and the angle 06R-170 from the aft side wall assembly 06R-010.

(f) Remove the ground cable from the oxygen container assy 06R-210.

(g) Remove the screws 06R-220, the washers 06R-230 and the oxygen container assy 06R-210 from the angles 06R-200.

(h) Remove the screws 06R-220, the washers 06R-230 and the angles 06R-200 from the aft side wall assembly 06R-010.

(i) Remove the screws 06R-390, the washers 06R-400 and the angle 06R-380 from the aft side wall assembly 06R-010.

(j) Remove the caps 06R-290, the screws 06R-280, 06R-300, the washers 06R-230 and the post assembly 06R-250.

(k) Disassemble the post assembly 06R-250 as follows:

1 Remove the screws 06R-260.

(l) Remove the screws 06R-030 and the fittings 06R-020 from the aft side wall assembly 06R-010.

SUB TASK 25-41-51-010-036-D01
D2549010611800

4. Removal of the Side Wall (06R-1)

NOTE: **See TABLE 3197 for the references for the replacement procedures of permanent installed parts.**

IPL FIG. ITEM	COMPONENT PART NAME	IPL FIG. ITEM	REPLACEMENT PART NAME	SEE REPAIR TASK
06R-001 06R-250	Side Wall Post Assembly	06R-270	Nut	Replacement of the Riveted Parts

Table 3197
Reference list for the replacement of permanent installed parts

(a) Remove and disassemble the handle assemblies 06R-120 as follows:

1 Remove the security pins 06R-140 from the handle assemblies 06R-120.

2 Remove the handle assemblies 06R-120 from the aft side wall assembly 06R-010.

3 Remove the special screws 06R-130 and the special washers 06R-150 from the aft side wall assembly 06R-010.

(b) Remove the screws 06R-320 and the lavatory picture frame kit 06R-310 from the aft side wall assembly 06R-010.

(c) Remove the studs 06R-240 and the washers 06R-230 from the cover oxygen container assy 06R-160.

(d) Remove the screws 06R-180, the nuts 06R-190 and the cover oxygen container assy 06R-160 from the angle 06R-170.

(e) Remove the screws 06R-220, the washers 06R-230 and the angle 06R-170 from the aft side wall assembly 06R-010.

(f) Remove the ground cable from the oxygen container assy 06R-210.

(g) Remove the screws 06R-220, the washers 06R-230 and the oxygen container assy 06R-210 from the angles 06R-200.

(h) Remove the screws 06R-220, the washers 06R-230 and the angles 06R-200 from the aft side wall assembly 06R-010.

(i) Remove the screws 06R-390, the washers 06R-400 and the angle 06R-380 from the aft side wall assembly 06R-010.

(j) Remove the caps 06R-290, the screws 06R-280, 06R-300, the washers 06R-230 and the post assembly 06R-250.

(k) Disassemble the post assembly 06R-250 as follows:

1 Remove the screws 06R-260.

TASK 25-41-51-000-804-T01
D2549020712000 D2549020712600

37. Removal of the Side Wall

A. General

A complete disassembly of the component is not necessary and not recommended.

Do not disassemble the component more than it is necessary for:

- Cleaning
- Visual Inspection
- Replacement of defective parts.

B. Job Set-up Information

(1) Not applicable

C. Procedure

WARNING: BE CAREFUL WHEN YOU USE SOLVENTS/CLEANING AGENTS, SEALANTS AND OTHER MATERIALS. OBEY THE MATERIAL MANUFACTURER'S INSTRUCTIONS AND THE LOCAL REGULATIONS. MAKE SURE THAT THERE IS A GOOD FLOW OF AIR THROUGH THE WORK AREA. DO NOT BREATHE THE FUMES. DO NOT SMOKE. DO NOT USE THESE MATERIALS NEAR A FLAME, SPARKS OR SOURCES OF HEAT. USE PROTECTIVE CLOTHING, GOGGLES AND GLOVES. IF YOU GET ONE OF THESE MATERIALS ON YOUR SKIN OR IN YOUR EYES, FLUSH IT AWAY WITH A FLOW OF CLEAN WATER. IF YOU GET ONE OF THESE MATERIALS IN YOUR MOUTH, GET IMMEDIATE MEDICAL AID. IN GENERAL, THESE MATERIALS ARE POISONOUS, FLAMMABLE AND SKIN IRRITANTS.

CAUTION: DO ALL THE WORK ON A CLEAN, SOFT SURFACE TO PREVENT DAMAGE TO THE COMPONENTS.

SUB TASK 25-41-51-010-037-A01
1. Removal of the Side Wall (06S-1)

NOTE: **See TABLE 3198 for the references for the replacement procedures of permanent installed parts.**

More data for bonded parts are given in column SEE REPAIR TASK. Use the data for the selection of the related repair solution.

IPL FIG. ITEM	COMPONENT PART NAME	IPL FIG. ITEM	REPLACEMENT PART NAME	SEE REPAIR TASK
06S-001 06S-200	Side Wall Post Assembly	06S-220	Nut	Replacement of the Riveted Parts
06S-001	Side Wall	06S-330	Placard	Replacement of the Self-adhesive Placards self adhesive
06S-001	Side Wall	06S-340	Placard	Replacement of the Self-adhesive Placards self adhesive
06S-001	Side Wall	06S-350	Placard	Replacement of the Self-adhesive Placards self adhesive

Table 3198
Reference list for the replacement of permanent installed parts

(a) Remove the screws 06S-270, the washers 06S-280 and the overhead storage compartment assembly 06S-290 from the aft side wall assembly 06S-010.

(b) Remove the screws 06S-270, the washers 06S-280 and the L-angles 06S-260 from the aft side wall assembly 06S-010.

(c) Remove the wardrobe-rail 06S-320 from the bracket 06S-300.

(d) Remove the screws 06S-310 and the bracket 06S-300 from the aft side wall assembly 06S-010.

(e) Remove the studs 06S-190 and the washers 06S-180 from the cover oxygen container assy 06S-120.

(f) Remove the screws 06S-140, the nuts 06S-150 and the cover oxygen container assy 06S-120 from the angle 06S-130.

(g) Remove the screws 06S-170, the washers 06S-180 and the angle 06S-130 from the aft side wall assembly 06S-010.

(h) Remove the screws 06S-170, the washers 06S-180 and the angles 06S-160 from the aft side wall assembly 06S-010.

(i) Remove the caps 06S-240, the screws 06S-230, 06S-250, the washers 06S-180 and the post assembly 06S-200.

(j) Disassemble the post assembly 06S-200 as follows:

1 Remove the screws 06S-210.

(k) Remove the screws 06S-030 and the fittings 06S-020 from the brackets 06S-013.

(l) Remove the brackets 06S-013, 06S-017 from the aft side wall assembly 06S-010.

TASK 25-41-51-000-804-U01
D2549010605200 D2549010606600 D2549020507400 D2549020509600 D2549020509800 D2549020511600 D2549020513000 D2549020606400 D2549020701600 D2549020705800 D2549020713600 D2549020714600 D2549030513200 D2549030600200 D2549030609000 D2549030610200 R225401115-000 R225401605-000 R225401613-000

38. Removal of the Side Wall

A. General

A complete disassembly of the component is not necessary and not recommended.

Do not disassemble the component more than it is necessary for:

- Cleaning
- Visual Inspection
- Replacement of defective parts.

B. Job Set-up Information

(1) Not applicable

C. Procedure

WARNING: BE CAREFUL WHEN YOU USE SOLVENTS/CLEANING AGENTS, SEALANTS AND OTHER MATERIALS. OBEY THE MATERIAL MANUFACTURER'S INSTRUCTIONS AND THE LOCAL REGULATIONS. MAKE SURE THAT THERE IS A GOOD FLOW OF AIR THROUGH THE WORK AREA. DO NOT BREATHE THE FUMES. DO NOT SMOKE. DO NOT USE THESE MATERIALS NEAR A FLAME, SPARKS OR SOURCES OF HEAT. USE PROTECTIVE CLOTHING, GOGGLES AND GLOVES. IF YOU GET ONE OF THESE MATERIALS ON YOUR SKIN OR IN YOUR EYES, FLUSH IT AWAY WITH A FLOW OF CLEAN WATER. IF YOU GET ONE OF THESE MATERIALS IN YOUR MOUTH, GET IMMEDIATE MEDICAL AID. IN GENERAL, THESE MATERIALS ARE POISONOUS, FLAMMABLE AND SKIN IRRITANTS.

WARNING: KEEP ALL HYDROCARBONS (FUELS, LUBRICANTS, ETC.) AWAY FROM ALL SOURCES OF OXYGEN. OXYGEN BECOMES EXPLOSIVE WHEN IT TOUCHES HYDROCARBONS.

WARNING: TO PREVENT CONTAMINATION OF THE OXYGEN SYSTEM, MAKE SURE THAT YOUR HANDS AND ALL THE TOOLS ARE CLEAN.

CAUTION: **PUT DRY, CLEAN, METAL OR PLASTIC PLUGS ON ALL PIPES OR UNITS REMOVED TEMPORARILY. PUT EACH PIPE OR UNIT IN A SEALED VINYL BAG. UNWANTED MATERIALS IN THE OXYGEN SYSTEM CAN DAMAGE THE SYSTEM.**

CAUTION: **DO ALL THE WORK ON A CLEAN, SOFT SURFACE TO PREVENT DAMAGE TO THE COMPONENTS.**

SUB TASK 25-41-51-010-038-A01
D2549020509800 D2549020714600 R225401605-000

1. Removal of the Side Wall (06T-1)

NOTE: **See TABLE 3199 for the references for the replacement procedures of permanent installed parts.**

IPL FIG. ITEM	COMPONENT PART NAME	IPL FIG. ITEM	REPLACEMENT PART NAME	SEE REPAIR TASK
06T-001 06T-250	Side Wall Post Assembly	06T-270	Nut	Replacement of the Riveted Parts

Table 3199
Reference list for the replacement of permanent installed parts

(a) Remove and disassemble the handle assemblies 06T-120 as follows:

1 Remove the security pins 06T-140 from the handle assemblies 06T-120.

2 Remove the handle assemblies 06T-120 from the aft side wall assembly 06T-010.

3 Remove the special screws 06T-130 and the special washers 06T-150 from the aft side wall assembly 06T-010.

(b) Remove the screw 06T-390 and the coat hook 06T-380.

(c) Remove the studs 06T-240 and the washers 06T-230 from the cover oxygen container assy 06T-160.

(d) Remove the screws 06T-180, the nuts 06T-190 and the cover oxygen container assy 06T-160 from the angle 06T-170.

(e) Remove the screws 06T-220, the washers 06T-230 and the angle 06T-170 from the aft side wall assembly 06T-010.

(f) Remove the ground cable from the oxygen container assy 06T-210.

(g) Remove the screws 06T-220, the washers 06T-230 and the oxygen container assy 06T-210 from the angles 06T-200.

(h) Remove the screws 06T-220, the washers 06T-230 and the angles 06T-200 from the aft side wall assembly 06T-010.

(i) Remove the caps 06T-290, the screws 06T-280, 06T-300, the washers 06T-230 and the post assembly 06T-250.

(j) Disassemble the post assembly 06T-250 as follows:

1 Remove the screws 06T-260.

(k) Remove the screws 06T-030 and the fittings 06T-020 from the brackets 06T-013.

(l) Remove the brackets 06T-013, 06T-017, 06T-019 from the aft side wall assembly 06T-010.

SUB TASK 25-41-51-010-038-B01
D2549030609000

2. Removal of the Side Wall (06T-1)

NOTE: **See TABLE 3200 for the references for the replacement procedures of permanent installed parts.**

IPL FIG. ITEM	COMPONENT PART NAME	IPL FIG. ITEM	REPLACEMENT PART NAME	SEE REPAIR TASK
06T-001 06T-250	Side Wall Post Assembly	06T-270	Nut	Replacement of the Riveted Parts

Table 3200
Reference list for the replacement of permanent installed parts

(a) Remove and disassemble the handle assembly 06T-340 as follows:

1 Remove the security pins 06T-360 from the handle assembly 06T-340.

2 Remove the handle assembly 06T-340 from the aft side wall assembly 06T-010.

3 Remove the special screws 06T-350 and the special washers 06T-370 from the aft side wall assembly 06T-010.

(b) Remove the screws 06T-281, the washers 06T-231 and the support 06T-330 from the aft side wall assembly 06T-010.

(c) Remove the toilet seat cover dispenser 06T-310 from the screws 06T-320.

(d) Remove the screws 06T-320 from the aft side wall assembly 06T-010.

(e) Remove the studs 06T-240 and the washers 06T-230 from the cover oxygen container assy 06T-160.

(f) Remove the screws 06T-180, the nuts 06T-190 and the cover oxygen container assy 06T-160 from the angle 06T-170.

(g) Remove the screws 06T-220, the washers 06T-230 and the angle 06T-170 from the aft side wall assembly 06T-010.

(h) Remove the ground cable from the oxygen container assy 06T-210.

(i) Remove the screws 06T-220, the washers 06T-230 and the oxygen container assy 06T-210 from the angles 06T-200.

(j) Remove the screws 06T-220, the washers 06T-230 and the angles 06T-200 from the aft side wall assembly 06T-010.

(k) Remove the screws 06T-440, 06T-460, the washers 06T-430 and the angle 06T-420 from the aft side wall assembly 06T-010.

(l) Remove the caps 06T-290, the screws 06T-280, 06T-300, the washers 06T-230 and the post assembly 06T-250.

(m) Disassemble the post assembly 06T-250 as follows:

1 Remove the screws 06T-260.

(n) Remove the screws 06T-030 and the fittings 06T-020 from the brackets 06T-013.

(o) Remove the brackets 06T-013, 06T-017 from the aft side wall assembly 06T-010.

SUB TASK 25-41-51-010-038-C01
D2549020509600 D2549020513000 D2549020701600 D2549020705800 R225401613-000

3. Removal of the Side Wall (06T-1)

NOTE: **See TABLE 3201 for the references for the replacement procedures of permanent installed parts.**

IPL FIG. ITEM	COMPONENT PART NAME	IPL FIG. ITEM	REPLACEMENT PART NAME	SEE REPAIR TASK
06T-001 06T-250	Side Wall Post Assembly	06T-270	Nut	Replacement of the Riveted Parts

Table 3201
Reference list for the replacement of permanent installed parts

(a) Remove and disassemble the handle assemblies 06T-120 as follows:

1 Remove the security pins 06T-140 from the handle assemblies 06T-120.

2 Remove the handle assemblies 06T-120 from the aft side wall assembly 06T-010.

3 Remove the special screws 06T-130 and the special washers 06T-150 from the aft side wall assembly 06T-010.

(b) Remove the toilet seat cover dispenser 06T-310 from the screws 06T-320.

(c) Remove the screws 06T-320 from the aft side wall assembly 06T-010.

(d) Remove the studs 06T-240 and the washers 06T-230 from the cover oxygen container assy 06T-160.

(e) Remove the screws 06T-180, the nuts 06T-190 and the cover oxygen container assy 06T-160 from the angle 06T-170.

(f) Remove the screws 06T-220, the washers 06T-230 and the angle 06T-170 from the aft side wall assembly 06T-010.

(g) Remove the ground cable from the oxygen container assy 06T-210.

(h) Remove the screws 06T-220, 06T-222, the washers 06T-230 and the oxygen container assy 06T-210 from the angles 06T-200.

(i) Remove the screws 06T-220, the washers 06T-230 and the angles 06T-200 from the aft side wall assembly 06T-010.

(j) Remove the caps 06T-290, the screws 06T-280, 06T-300, the washers 06T-230 and the post assembly 06T-250.

(k) Disassemble the post assembly 06T-250 as follows:

1 Remove the screws 06T-260.

(l) Remove the screws 06T-030 and the fittings 06T-020 from the brackets 06T-013.

(m) Remove the brackets 06T-013, 06T-017 from the aft side wall assembly 06T-010.

SUB TASK 25-41-51-010-038-D01
D2549030610200

4. Removal of the Side Wall (06T-1)

NOTE: **See TABLE 3202 for the references for the replacement procedures of permanent installed parts.**

IPL FIG. ITEM	COMPONENT PART NAME	IPL FIG. ITEM	REPLACEMENT PART NAME	SEE REPAIR TASK
06T-001 06T-250	Side Wall Post Assembly	06T-270	Nut	Replacement of the Riveted Parts

Table 3202
Reference list for the replacement of permanent installed parts

(a) Remove and disassemble the handle assemblies 06T-120 as follows:

1 Remove the security pins 06T-140 from the handle assemblies 06T-120.

2 Remove the handle assemblies 06T-120 from the aft side wall assembly 06T-010.

3 Remove the special screws 06T-130 and the special washers 06T-150 from the aft side wall assembly 06T-010.

(b) Remove the toilet seat cover dispenser 06T-310 from the screws 06T-320.

(c) Remove the screws 06T-320 from the aft side wall assembly 06T-010.

(d) Remove the studs 06T-240 and the washers 06T-230 from the cover oxygen container assy 06T-160.

(e) Remove the screws 06T-180, the nuts 06T-190 and the cover oxygen container assy 06T-160 from the angle 06T-170.

(f) Remove the screws 06T-220, the washers 06T-230 and the angle 06T-170 from the aft side wall assembly 06T-010.

(g) Remove the ground cable from the oxygen container assy 06T-210.

(h) Remove the screws 06T-220, the washers 06T-230 and the oxygen container assy 06T-210 from the angles 06T-200.

(i) Remove the screws 06T-220, the washers 06T-230 and the angles 06T-200 from the aft side wall assembly 06T-010.

(j) Remove the caps 06T-290, the screws 06T-280, 06T-300, the washers 06T-230 and the post assembly 06T-250.

(k) Disassemble the post assembly 06T-250 as follows:

1 Remove the screws 06T-260.

(l) Remove the screws 06T-030 and the fittings 06T-020 from the brackets 06T-013.

(m) Remove the brackets 06T-013, 06T-017 from the aft side wall assembly 06T-010.

SUB TASK 25-41-51-010-038-E01
D2549010605200 D2549010606600 D2549030513200

5. Removal of the Side Wall (06T-1)

NOTE: **See TABLE 3203 for the references for the replacement procedures of permanent installed parts.**

IPL FIG. ITEM	COMPONENT PART NAME	IPL FIG. ITEM	REPLACEMENT PART NAME	SEE REPAIR TASK
06T-001 06T-250	Side Wall Post Assembly	06T-270	Nut	Replacement of the Riveted Parts

Table 3203
Reference list for the replacement of permanent installed parts

(a) Remove and disassemble the handle assembly 06T-340 as follows:

1 Remove the security pins 06T-360 from the handle assembly 06T-340.

2 Remove the handle assembly 06T-340 from the aft side wall assembly 06T-010.

3 Remove the special screws 06T-350 and the special washers 06T-370 from the aft side wall assembly 06T-010.

(b) Remove the screws 06T-281, the washers 06T-231 and the support 06T-330 from the aft side wall assembly 06T-010.

(c) Remove the toilet seat cover dispenser 06T-310 from the screws 06T-320.

(d) Remove the screws 06T-320 from the aft side wall assembly 06T-010.

(e) Remove the studs 06T-240 and the washers 06T-230 from the cover oxygen container assy 06T-160.

(f) Remove the screws 06T-180, the nuts 06T-190 and the cover oxygen container assy 06T-160 from the angle 06T-170.

(g) Remove the screws 06T-220, the washers 06T-230 and the angle 06T-170 from the aft side wall assembly 06T-010.

(h) Remove the ground cable from the oxygen container assy 06T-210.

(i) Remove the screws 06T-220, the washers 06T-230 and the oxygen container assy 06T-210 from the angles 06T-200.

(j) Remove the screws 06T-220, the washers 06T-230 and the angles 06T-200 from the aft side wall assembly 06T-010.

(k) Remove the caps 06T-290, the screws 06T-280, 06T-300, the washers 06T-230 and the post assembly 06T-250.

(l) Disassemble the post assembly 06T-250 as follows:

1 Remove the screws 06T-260.

(m) Remove the screws 06T-030 and the fittings 06T-020 from the brackets 06T-013.

(n) Remove the brackets 06T-013, 06T-017 from the aft side wall assembly 06T-010.

SUB TASK 25-41-51-010-038-F01
D2549030600200

6. Removal of the Side Wall (06T-1)

NOTE: **See TABLE 3204 for the references for the replacement procedures of permanent installed parts.**

IPL FIG. ITEM	COMPONENT PART NAME	IPL FIG. ITEM	REPLACEMENT PART NAME	SEE REPAIR TASK
06T-001 06T-250	Side Wall Post Assembly	06T-270	Nut	Replacement of the Riveted Parts

Table 3204
Reference list for the replacement of permanent installed parts

(a) Remove and disassemble the handle assembly 06T-340 as follows:

1 Remove the security pins 06T-360 from the handle assembly 06T-340.

2 Remove the handle assembly 06T-340 from the aft side wall assembly 06T-010.

3 Remove the special screws 06T-350 and the special washers 06T-370 from the aft side wall assembly 06T-010.

(b) Remove the screws 06T-281, the washers 06T-231 and the support 06T-330 from the aft side wall assembly 06T-010.

(c) Remove the toilet seat cover dispenser 06T-310 from the screws 06T-320.

(d) Remove the screws 06T-320 from the aft side wall assembly 06T-010.

(e) Remove the studs 06T-240 and the washers 06T-230 from the cover oxygen container assy 06T-160.

(f) Remove the screws 06T-180, the nuts 06T-190 and the cover oxygen container assy 06T-160 from the angle 06T-170.

(g) Remove the screws 06T-220, the washers 06T-230 and the angle 06T-170 from the aft side wall assembly 06T-010.

(h) Remove the ground cable from the oxygen container assy 06T-210.

(i) Remove the screws 06T-220, the washers 06T-230 and the oxygen container assy 06T-210 from the angles 06T-200.

(j) Remove the screws 06T-220, the washers 06T-230 and the angles 06T-200 from the aft side wall assembly 06T-010.

(k) Remove the caps 06T-290, the screws 06T-280, 06T-300, the washers 06T-230 and the post assembly 06T-250.

(l) Disassemble the post assembly 06T-250 as follows:

1 Remove the screws 06T-260.

(m) Remove the screws 06T-030 and the fittings 06T-020 from the brackets 06T-013.

(n) Remove the brackets 06T-013, 06T-017 from the aft side wall assembly 06T-010.

SUB TASK 25-41-51-010-038-G01
D2549020713600

7. Removal of the Side Wall (06T-1)

NOTE: **See TABLE 3205 for the references for the replacement procedures of permanent installed parts.**

IPL FIG. ITEM	COMPONENT PART NAME	IPL FIG. ITEM	REPLACEMENT PART NAME	SEE REPAIR TASK
06T-001 06T-250	Side Wall Post Assembly	06T-270	Nut	Replacement of the Riveted Parts

Table 3205
Reference list for the replacement of permanent installed parts

(a) Remove and disassemble the handle assemblies 06T-120 as follows:

1 Remove the security pins 06T-140 from the handle assemblies 06T-120.

2 Remove the handle assemblies 06T-120 from the aft side wall assembly 06T-010.

3 Remove the special screws 06T-130 and the special washers 06T-150 from the aft side wall assembly 06T-010.

(b) Remove the studs 06T-240 and the washers 06T-230 from the cover oxygen container assy 06T-160.

(c) Remove the screws 06T-180, the nuts 06T-190 and the cover oxygen container assy 06T-160 from the angle 06T-170.

(d) Remove the screws 06T-220, the washers 06T-230 and the angle 06T-170 from the aft side wall assembly 06T-010.

(e) Remove the ground cable from the oxygen container assy 06T-210.

(f) Remove the screws 06T-220, the washers 06T-230 and the oxygen container assy 06T-210 from the angles 06T-200.

(g) Remove the screws 06T-220, the washers 06T-230 and the angles 06T-200 from the aft side wall assembly 06T-010.

(h) Remove the caps 06T-290, the screws 06T-280, 06T-300, the washers 06T-230 and the post assembly 06T-250.

(i) Disassemble the post assembly 06T-250 as follows:

1 Remove the screws 06T-260.

(j) Remove the screws 06T-030 and the fittings 06T-020 from the brackets 06T-013.

(k) Remove the brackets 06T-013, 06T-017 from the aft side wall assembly 06T-010.

SUB TASK 25-41-51-010-038-H01
D2549020511600 D2549020606400

8. Removal of the Side Wall (06T-1)

NOTE: **See TABLE 3206 for the references for the replacement procedures of permanent installed parts.**

IPL FIG. ITEM	COMPONENT PART NAME	IPL FIG. ITEM	REPLACEMENT PART NAME	SEE REPAIR TASK
06T-001 06T-250	Side Wall Post Assembly	06T-270	Nut	Replacement of the Riveted Parts

Table 3206
Reference list for the replacement of permanent installed parts

(a) Remove and disassemble the handle assemblies 06T-120 as follows:

1 Remove the security pins 06T-140 from the handle assemblies 06T-120.

2 Remove the handle assemblies 06T-120 from the aft side wall assembly 06T-010.

3 Remove the special screws 06T-130 and the special washers 06T-150 from the aft side wall assembly 06T-010.

(b) Remove the studs 06T-240 and the washers 06T-230 from the cover oxygen container assy 06T-160.

(c) Remove the screws 06T-180, the nuts 06T-190 and the cover oxygen container assy 06T-160 from the angle 06T-170.

(d) Remove the screws 06T-220, the washers 06T-230 and the angle 06T-170 from the aft side wall assembly 06T-010.

(e) Remove the ground cable from the oxygen container assy 06T-210.

(f) Remove the screws 06T-220, the washers 06T-230 and the oxygen container assy 06T-210 from the angles 06T-200.

(g) Remove the screws 06T-220, the washers 06T-230 and the angles 06T-200 from the aft side wall assembly 06T-010.

(h) Remove the caps 06T-290, the screws 06T-280, 06T-300, the washers 06T-230 and the post assembly 06T-250.

(i) Disassemble the post assembly 06T-250 as follows:

1 Remove the screws 06T-260.

(j) Remove the screws 06T-030 and the fittings 06T-020 from the brackets 06T-013.

(k) Remove the brackets 06T-013, 06T-017 from the aft side wall assembly 06T-010.

SUB TASK 25-41-51-010-038-J01
D2549020507400 R225401115-000

9. Removal of the Side Wall (06T-1)

NOTE: **See TABLE 3207 for the references for the replacement procedures of permanent installed parts.**

IPL FIG. ITEM	COMPONENT PART NAME	IPL FIG. ITEM	REPLACEMENT PART NAME	SEE REPAIR TASK
06T-001 06T-250	Side Wall Post Assembly	06T-270	Nut	Replacement of the Riveted Parts

Table 3207
Reference list for the replacement of permanent installed parts

(a) Remove and disassemble the handle assembly 06T-340 as follows:

1 Remove the security pins 06T-360 from the handle assembly 06T-340.

2 Remove the handle assembly 06T-340 from the aft side wall assembly 06T-010.

3 Remove the special screws 06T-350 and the special washers 06T-370 from the aft side wall assembly 06T-010.

(b) Remove the screws 06T-281, the washers 06T-231 and the support 06T-330 from the aft side wall assembly 06T-010.

(c) Remove the studs 06T-240 and the washers 06T-230 from the cover oxygen container assy 06T-160.

(d) Remove the screws 06T-180, the nuts 06T-190 and the cover oxygen container assy 06T-160 from the angle 06T-170.

(e) Remove the screws 06T-220, the washers 06T-230 and the angle 06T-170 from the aft side wall assembly 06T-010.

(f) Remove the ground cable from the oxygen container assy 06T-210.

(g) Remove the screws 06T-220, 06T-222, the washers 06T-230 and the oxygen container assy 06T-210 from the angles 06T-200.

(h) Remove the screws 06T-220, the washers 06T-230 and the angles 06T-200 from the aft side wall assembly 06T-010.

(i) Remove the caps 06T-290, the screws 06T-280, 06T-300, the washers 06T-230 and the post assembly 06T-250.

(j) Disassemble the post assembly 06T-250 as follows:

1 Remove the screws 06T-260.

(k) Remove the screws 06T-030 and the fittings 06T-020 from the brackets 06T-013.

(l) Remove the brackets 06T-013, 06T-017 from the aft side wall assembly 06T-010.

TASK 25-41-51-000-804-V01
D2549010606800 D2549010607000 D2549010609000 D2549020505600 D2549020510000 D2549020801000 D2549020803600 D2549030400200 D2549030400400 D2549030403800 D2549030606800 D2549030608000 D2549030609800 D2549030611000 D2549030612800 D2549030613400 D2549030614200 D2549030614400 R225401134-012 R225401134-028 R225401172-000 R225401192-000 R225401614-000 R225401618-000 R225401618-002 R225401625-000

39. Removal of the Side Wall

A. General

A complete disassembly of the component is not necessary and not recommended.

Do not disassemble the component more than it is necessary for:

- Cleaning
- Visual Inspection
- Replacement of defective parts.

B. Job Set-up Information
(1) Consumable Materials

REFERENCE	DESIGNATION
08-007	Sealant, High Temperature

Table 3208
Consumable Materials

(2) Fixtures, Tools, Test and Support Equipment

REFERENCE	DESIGNATION
	hot air blower

Table 3209
Fixtures, Tools, Test and Support Equipment

C. Procedure

WARNING: **BE CAREFUL WHEN YOU USE SOLVENTS/CLEANING AGENTS, SEALANTS AND OTHER MATERIALS. OBEY THE MATERIAL MANUFACTURER'S INSTRUCTIONS AND THE LOCAL REGULATIONS. MAKE SURE THAT THERE IS A GOOD FLOW OF AIR THROUGH THE WORK AREA. DO NOT BREATHE THE FUMES. DO NOT SMOKE. DO NOT USE THESE MATERIALS NEAR A FLAME, SPARKS OR SOURCES OF HEAT. USE PROTECTIVE CLOTHING, GOGGLES AND GLOVES. IF YOU GET ONE OF THESE MATERIALS ON YOUR SKIN OR IN YOUR EYES, FLUSH IT AWAY WITH A FLOW OF CLEAN WATER. IF YOU GET ONE OF THESE MATERIALS IN YOUR MOUTH, GET IMMEDIATE MEDICAL AID. IN GENERAL, THESE MATERIALS ARE POISONOUS, FLAMMABLE AND SKIN IRRITANTS.**

WARNING: **KEEP ALL HYDROCARBONS (FUELS, LUBRICANTS, ETC.) AWAY FROM ALL SOURCES OF OXYGEN. OXYGEN BECOMES EXPLOSIVE WHEN IT TOUCHES HYDROCARBONS.**

WARNING: **TO PREVENT CONTAMINATION OF THE OXYGEN SYSTEM, MAKE SURE THAT YOUR HANDS AND ALL THE TOOLS ARE CLEAN.**

CAUTION: **PUT DRY, CLEAN, METAL OR PLASTIC PLUGS ON ALL PIPES OR UNITS REMOVED TEMPORARILY. PUT EACH PIPE OR UNIT IN A SEALED VINYL BAG. UNWANTED MATERIALS IN THE OXYGEN SYSTEM CAN DAMAGE THE SYSTEM.**

CAUTION: **DO ALL THE WORK ON A CLEAN, SOFT SURFACE TO PREVENT DAMAGE TO THE COMPONENTS.**

SUB TASK 25-41-51-010-039-A01
D2549010609000

1. Removal of the Side Wall (06U-1)

NOTE: **See TABLE 3210 for the references for the replacement procedures of permanent installed parts.**

IPL FIG. ITEM	COMPONENT PART NAME	IPL FIG. ITEM	REPLACEMENT PART NAME	SEE REPAIR TASK
06U-001 06U-250	Side Wall Post Assembly	06U-255	Nut	Replacement of the Riveted Parts

Table 3210
Reference list for the replacement of permanent installed parts

(a) Remove and disassemble the handle assemblies 06U-120 as follows:

1 Remove the security pins 06U-140 from the handle assemblies 06U-120.

2 Remove the handle assemblies 06U-120 from the aft side wall assembly 06U-010.

3 Remove the special screws 06U-130 and the special washers 06U-150 from the aft side wall assembly 06U-010.

(b) Remove the toilet seat cover dispenser 06U-290 from the screws 06U-305.

(c) Remove the screws 06U-305 and the washers 06U-360 from the aft side wall assembly 06U-010.

(d) Remove the studs 06U-240 and the washers 06U-230 from the cover oxygen container assy 06U-160.

(e) Remove the screws 06U-180, the nuts 06U-190 and the cover oxygen container assy 06U-160 from the angle 06U-170.

(f) Remove the screws 06U-220, the washers 06U-230 and the angle 06U-170 from the aft side wall assembly 06U-010.

(g) Remove the ground cable from the oxygen container assy 06U-210.

(h) Remove the screws 06U-220, the washers 06U-230 and the oxygen container assy 06U-210 from the angles 06U-200.

(i) Remove the screws 06U-220, the washers 06U-230 and the angles 06U-200 from the aft side wall assembly 06U-010.

(j) Remove the screws 06U-380, the washers 06U-390 and the angle 06U-370 from the aft side wall assembly 06U-010.

(k) Remove the caps 06U-270, the screws 06U-260, 06U-280, the washers 06U-230 and the post assembly 06U-250.

(l) Disassemble the post assembly 06U-250 as follows:

1 Remove the screws 06U-253.

(m) Remove the screws 06U-030 and the fittings 06U-020 from the aft side wall assembly 06U-010.

SUB TASK 25-41-51-010-039-B01
D2549030400200 D2549030613400

2. Removal of the Side Wall (06U-1)

NOTE: **See TABLE 3211 for the references for the replacement procedures of permanent installed parts.**

IPL FIG. ITEM	COMPONENT PART NAME	IPL FIG. ITEM	REPLACEMENT PART NAME	SEE REPAIR TASK
06U-001 06U-250	Side Wall Post Assembly	06U-255	Nut	Replacement of the Riveted Parts

Table 3211
Reference list for the replacement of permanent installed parts

(a) Remove and disassemble the handle assemblies 06U-120 as follows:

1 Remove the security pins 06U-140 from the handle assemblies 06U-120.

2 Remove the handle assemblies 06U-120 from the aft side wall assembly 06U-010.

3 Remove the special screws 06U-130 and the special washers 06U-150 from the aft side wall assembly 06U-010.

(b) Remove the studs 06U-240 and the washers 06U-230 from the cover oxygen container assy 06U-160.

(c) Remove the screws 06U-180, the nuts 06U-190 and the cover oxygen container assy 06U-160 from the angle 06U-170.

(d) Remove the screws 06U-220, the washers 06U-230 and the angle 06U-170 from the aft side wall assembly 06U-010.

(e) Remove the ground cable from the oxygen container assy 06U-210.

(f) Remove the screws 06U-220, the washers 06U-230 and the oxygen container assy 06U-210 from the angles 06U-200.

(g) Remove the screws 06U-220, the washers 06U-230 and the angles 06U-200 from the aft side wall assembly 06U-010.

(h) Remove the screws 06U-380, the washers 06U-390 and the angle 06U-370 from the aft side wall assembly 06U-010.

(i) Remove the screws 06U-490, the nuts 06U-500, the plates 06U-480 and the single door emergency unlocking device assembly 06U-410 from the post assembly 06U-250.

(j) Disassemble the single door emergency unlocking device assembly 06U-410 as follows:

WARNING: BE CAREFUL WHEN YOU USE MATERIAL NO. 08-007 SEALANT, HIGH TEMPERATURE. OBEY THE MATERIAL MANUFACTURER'S INSTRUCTIONS.

1 Remove the bolt 06U-470 and the emergency unlocking-device strike 06U-430 from the emergency unlocking-device housing 06U-420.

NOTE: If necessary use a hot air blower to heat up the Material No. 08-007 Sealant, High Temperature to remove the bolt 06U-470.

WARNING: BE CAREFUL WHEN YOU USE MATERIAL NO. 08-007 SEALANT, HIGH TEMPERATURE. OBEY THE MATERIAL MANUFACTURER'S INSTRUCTIONS.

2 Remove the pin 06U-450, the snap catch 06U-460 and the emergency unlocking-device pivot 06U-440 from the emergency unlocking-device housing 06U-420.

NOTE: If necessary use a hot air blower to heat up the Material No. 08-007 Sealant, High Temperature to remove the snap catch 06U-460 and the pin 06U-450.

(k) Remove the caps 06U-270, the screws 06U-260, 06U-280, the washers 06U-230 and the post assembly 06U-250.

(l) Disassemble the post assembly 06U-250 as follows:

1 Remove the screws 06U-253.

(m) Remove the screws 06U-030 and the fittings 06U-020 from the aft side wall assembly 06U-010.

SUB TASK 25-41-51-010-039-C01
D2549020510000 D2549030606800 R225401192-000 R225401618-000 R225401618-002

3. Removal of the Side Wall (06U-1)

NOTE: **See TABLE 3212 for the references for the replacement procedures of permanent installed parts.**

IPL FIG. ITEM	COMPONENT PART NAME	IPL FIG. ITEM	REPLACEMENT PART NAME	SEE REPAIR TASK
06U-001 06U-250	Side Wall Post Assembly	06U-255	Nut	Replacement of the Riveted Parts

Table 3212
Reference list for the replacement of permanent installed parts

(a) Remove and disassemble the handle assemblies 06U-120 as follows:

1 Remove the security pins 06U-140 from the handle assemblies 06U-120.

2 Remove the handle assemblies 06U-120 from the aft side wall assembly 06U-010.

3 Remove the special screws 06U-130 and the special washers 06U-150 from the aft side wall assembly 06U-010.

(b) Remove the studs 06U-240 and the washers 06U-230 from the cover oxygen container assy 06U-160.

(c) Remove the screws 06U-180, the nuts 06U-190 and the cover oxygen container assy 06U-160 from the angle 06U-170.

(d) Remove the screws 06U-220, the washers 06U-230 and the angle 06U-170 from the aft side wall assembly 06U-010.

(e) Remove the ground cable from the oxygen container assy 06U-210.

(f) Remove the screws 06U-220, 06U-222, the washers 06U-230 and the oxygen container assy 06U-210 from the angles 06U-200.

(g) Remove the screws 06U-220, the washers 06U-230 and the angles 06U-200 from the aft side wall assembly 06U-010.

(h) Remove the caps 06U-270, the screws 06U-260, 06U-280, the washers 06U-230 and the post assembly 06U-250.

(i) Disassemble the post assembly 06U-250 as follows:

1 Remove the screws 06U-253.

(j) Remove the screws 06U-030 and the fittings 06U-020 from the brackets 06U-013.

(k) Remove the brackets 06U-013, 06U-017 from the aft side wall assembly 06U-010.

SUB TASK 25-41-51-010-039-D01
D2549010606800 D2549010607000

4. Removal of the Side Wall (06U-1)

NOTE: **See TABLE 3213 for the references for the replacement procedures of permanent installed parts.**

IPL FIG. ITEM	COMPONENT PART NAME	IPL FIG. ITEM	REPLACE-MENT PART NAME	SEE REPAIR TASK
06U-001 06U-250	Side Wall Post Assembly	06U-255	Nut	Replacement of the Riveted Parts

Table 3213
Reference list for the replacement of permanent installed parts

(a) Remove and disassemble the handle assemblies 06U-120 as follows:

1 Remove the security pins 06U-140 from the handle assemblies 06U-120.

2 Remove the handle assemblies 06U-120 from the aft side wall assembly 06U-010.

3 Remove the special screws 06U-130 and the special washers 06U-150 from the aft side wall assembly 06U-010.

(b) Remove the toilet seat cover dispenser 06U-290 from the screws 06U-300.

(c) Remove the screws 06U-300 from the aft side wall assembly 06U-010.

(d) Remove the studs 06U-240 and the washers 06U-230 from the cover oxygen container assy 06U-160.

(e) Remove the screws 06U-180, the nuts 06U-190 and the cover oxygen container assy 06U-160 from the angle 06U-170.

(f) Remove the screws 06U-220, the washers 06U-230 and the angle 06U-170 from the aft side wall assembly 06U-010.

(g) Remove the ground cable from the oxygen container assy 06U-210.

(h) Remove the screws 06U-220, the washers 06U-230 and the oxygen container assy 06U-210 from the angles 06U-200.

(i) Remove the screws 06U-220, the washers 06U-230 and the angles 06U-200 from the aft side wall assembly 06U-010.

(j) Remove the caps 06U-270, the screws 06U-260, 06U-280, the washers 06U-230 and the post assembly 06U-250.

(k) Disassemble the post assembly 06U-250 as follows:

1 Remove the screws 06U-253.

(l) Remove the screws 06U-030 and the fittings 06U-020 from the brackets 06U-013.

(m) Remove the brackets 06U-013, 06U-017 from the aft side wall assembly 06U-010.

SUB TASK 25-41-51-010-039-E01
D2549020505600

5. Removal of the Side Wall (06U-1)

NOTE: **See TABLE 3214 for the references for the replacement procedures of permanent installed parts.**

IPL FIG. ITEM	COMPONENT PART NAME	IPL FIG. ITEM	REPLACEMENT PART NAME	SEE REPAIR TASK
06U-001 06U-250	Side Wall Post Assembly	06U-255	Nut	Replacement of the Riveted Parts

Table 3214
Reference list for the replacement of permanent installed parts

(a) Remove and disassemble the handle assembly 06U-310 as follows:

1 Remove the security pins 06U-330 from the handle assembly 06U-310.

2 Remove the handle assembly 06U-310 from the aft side wall assembly 06U-010.

3 Remove the special screws 06U-320 and the special washers 06U-340 from the aft side wall assembly 06U-010.

(b) Remove the screws 06U-261, the washers 06U-231 and the support 06U-350 from the aft side wall assembly 06U-010.

(c) Remove the studs 06U-240 and the washers 06U-230 from the cover oxygen container assy 06U-160.

(d) Remove the screws 06U-180, the nuts 06U-190 and the cover oxygen container assy 06U-160 from the angle 06U-170.

(e) Remove the screws 06U-220, the washers 06U-230 and the angle 06U-170 from the aft side wall assembly 06U-010.

(f) Remove the ground cable from the oxygen container assy 06U-210.

(g) Remove the screws 06U-220, the washers 06U-230 and the oxygen container assy 06U-210 from the angles 06U-200.

(h) Remove the screws 06U-220, the washers 06U-230 and the angles 06U-200 from the aft side wall assembly 06U-010.

(i) Remove the caps 06U-270, the screws 06U-260, 06U-280, the washers 06U-230 and the post assembly 06U-250.

(j) Disassemble the post assembly 06U-250 as follows:

1 Remove the screws 06U-253.

(k) Remove the screws 06U-030 and the fittings 06U-020 from the brackets 06U-013.

(l) Remove the brackets 06U-013, 06U-017 from the aft side wall assembly 06U-010.

SUB TASK 25-41-51-010-039-F01
D2549030614200 D2549030614400 R225401625-000

6. Removal of the Side Wall (06U-1)

NOTE: **See TABLE 3215 for the references for the replacement procedures of permanent installed parts.**

IPL FIG. ITEM	COMPONENT PART NAME	IPL FIG. ITEM	REPLACEMENT PART NAME	SEE REPAIR TASK
06U-001 06U-250	Side Wall Post Assembly	06U-255	Nut	Replacement of the Riveted Parts

Table 3215
Reference list for the replacement of permanent installed parts

(a) Remove and disassemble the handle assembly 06U-310 as follows:

1 Remove the security pins 06U-330 from the handle assembly 06U-310.

2 Remove the handle assembly 06U-310 from the aft side wall assembly 06U-010.

3 Remove the special screws 06U-320 and the special washers 06U-340 from the aft side wall assembly 06U-010.

(b) Remove the screws 06U-261, the washers 06U-231 and the support 06U-350 from the aft side wall assembly 06U-010.

(c) Remove the toilet seat cover dispenser 06U-290 from the screws 06U-300.

(d) Remove the screws 06U-300 from the aft side wall assembly 06U-010.

(e) Remove the studs 06U-240 and the washers 06U-230 from the cover oxygen container assy 06U-160.

(f) Remove the screws 06U-180, the nuts 06U-190 and the cover oxygen container assy 06U-160 from the angle 06U-170.

(g) Remove the screws 06U-220, the washers 06U-230 and the angle 06U-170 from the aft side wall assembly 06U-010.

(h) Remove the ground cable from the oxygen container assy 06U-210.

(i) Remove the screws 06U-220, 06U-222, the washers 06U-230 and the oxygen container assy 06U-210 from the angles 06U-200.

(j) Remove the screws 06U-220, the washers 06U-230 and the angles 06U-200 from the aft side wall assembly 06U-010.

(k) Remove the caps 06U-270, the screws 06U-260, 06U-280, the washers 06U-230 and the post assembly 06U-250.

(l) Disassemble the post assembly 06U-250 as follows:

1 Remove the screws 06U-253.

(m) Remove the screws 06U-030 and the fittings 06U-020 from the brackets 06U-013.

(n) Remove the brackets 06U-013, 06U-017 from the aft side wall assembly 06U-010.

SUB TASK 25-41-51-010-039-G01
D2549030611000

7. Removal of the Side Wall (06U-1)

NOTE: **See TABLE 3216 for the references for the replacement procedures of permanent installed parts.**

IPL FIG. ITEM	COMPONENT PART NAME	IPL FIG. ITEM	REPLACEMENT PART NAME	SEE REPAIR TASK
06U-001 06U-250	Side Wall Post Assembly	06U-255	Nut	Replacement of the Riveted Parts

Table 3216
Reference list for the replacement of permanent installed parts

(a) Remove and disassemble the handle assemblies 06U-120 as follows:

1 Remove the security pins 06U-140 from the handle assemblies 06U-120.

2 Remove the handle assemblies 06U-120 from the aft side wall assembly 06U-010.

3 Remove the special screws 06U-130 and the special washers 06U-150 from the aft side wall assembly 06U-010.

(b) Remove the studs 06U-240 and the washers 06U-230 from the cover oxygen container assy 06U-160.

(c) Remove the screws 06U-180, the nuts 06U-190 and the cover oxygen container assy 06U-160 from the angle 06U-170.

(d) Remove the screws 06U-220, the washers 06U-230 and the angle 06U-170 from the aft side wall assembly 06U-010.

(e) Remove the ground cable from the oxygen container assy 06U-210.

(f) Remove the screws 06U-220, the washers 06U-230 and the oxygen container assy 06U-210 from the angles 06U-200.

(g) Remove the screws 06U-220, the washers 06U-230 and the angles 06U-200 from the aft side wall assembly 06U-010.

(h) Remove the screws 06U-380, the washers 06U-390 and the angle 06U-370 from the aft side wall assembly 06U-010.

(i) Remove the caps 06U-270, the screws 06U-260, 06U-280, the washers 06U-230 and the post assembly 06U-250.

(j) Disassemble the post assembly 06U-250 as follows:

1 Remove the screws 06U-253.

(k) Remove the screws 06U-030 and the fittings 06U-020 from the aft side wall assembly 06U-010.

SUB TASK 25-41-51-010-039-H01
D2549020803600 D2549030609800

8. Removal of the Side Wall (06U-1)

NOTE: **See TABLE 3217 for the references for the replacement procedures of permanent installed parts.**

IPL FIG. ITEM	COMPONENT PART NAME	IPL FIG. ITEM	REPLACEMENT PART NAME	SEE REPAIR TASK
06U-001 06U-250	Side Wall Post Assembly	06U-255	Nut	Replacement of the Riveted Parts

Table 3217
Reference list for the replacement of permanent installed parts

(a) Remove and disassemble the handle assemblies 06U-120 as follows:

1 Remove the security pins 06U-140 from the handle assemblies 06U-120.

2 Remove the handle assemblies 06U-120 from the aft side wall assembly 06U-010.

3 Remove the special screws 06U-130 and the special washers 06U-150 from the aft side wall assembly 06U-010.

(b) Remove the studs 06U-240 and the washers 06U-230 from the cover oxygen container assy 06U-160.

(c) Remove the screws 06U-180, the nuts 06U-190 and the cover oxygen container assy 06U-160 from the angle 06U-170.

(d) Remove the screws 06U-220, the washers 06U-230 and the angle 06U-170 from the aft side wall assembly 06U-010.

(e) Remove the ground cable from the oxygen container assy 06U-210.

(f) Remove the screws 06U-220, the washers 06U-230 and the oxygen container assy 06U-210 from the angles 06U-200.

(g) Remove the screws 06U-220, the washers 06U-230 and the angles 06U-200 from the aft side wall assembly 06U-010.

(h) Remove the screws 06U-380, the washers 06U-390 and the angle 06U-370 from the aft side wall assembly 06U-010.

(i) Remove the caps 06U-270, the screws 06U-260, 06U-280, the washers 06U-230 and the post assembly 06U-250.

(j) Disassemble the post assembly 06U-250 as follows:

1 Remove the screws 06U-253.

(k) Remove the screws 06U-030 and the fittings 06U-020 from the aft side wall assembly 06U-010.

SUB TASK 25-41-51-010-039-J01
D2549030403800 R225401172-000

9. Removal of the Side Wall (06U-1)

NOTE: **See TABLE 3218 for the references for the replacement procedures of permanent installed parts.**

IPL FIG. ITEM	COMPONENT PART NAME	IPL FIG. ITEM	REPLACEMENT PART NAME	SEE REPAIR TASK
06U-001 06U-250	Side Wall Post Assembly	06U-255	Nut	Replacement of the Riveted Parts

Table 3218
Reference list for the replacement of permanent installed parts

(a) Remove and disassemble the handle assemblies 06U-120 as follows:

1 Remove the security pins 06U-140 from the handle assemblies 06U-120.

2 Remove the handle assemblies 06U-120 from the aft side wall assembly 06U-010.

3 Remove the special screws 06U-130 and the special washers 06U-150 from the aft side wall assembly 06U-010.

(b) Remove the toilet seat cover dispenser 06U-290 from the screws 06U-300.

(c) Remove the screws 06U-300 from the aft side wall assembly 06U-010.

(d) Remove the studs 06U-240 and the washers 06U-230 from the cover oxygen container assy 06U-160.

(e) Remove the screws 06U-180, the nuts 06U-190 and the cover oxygen container assy 06U-160 from the angle 06U-170.

(f) Remove the screws 06U-220, the washers 06U-230 and the angle 06U-170 from the aft side wall assembly 06U-010.

(g) Remove the ground cable from the oxygen container assy 06U-210.

(h) Remove the screws 06U-220, 06U-222, the washers 06U-230 and the oxygen container assy 06U-210 from the angles 06U-200.

(i) Remove the screws 06U-220, the washers 06U-230 and the angles 06U-200 from the aft side wall assembly 06U-010.

(j) Remove the screws 06U-380, the washers 06U-390 and the angle 06U-370 from the aft side wall assembly 06U-010.

(k) Remove the caps 06U-270, the screws 06U-260, 06U-280, the washers 06U-230 and the post assembly 06U-250.

(l) Disassemble the post assembly 06U-250 as follows:

1 Remove the screws 06U-253.

(m) Remove the screws 06U-030 and the fittings 06U-020 from the aft side wall assembly 06U-010.

SUB TASK 25-41-51-010-039-K01
D2549020801000 D2549030400400 D2549030608000 D2549030612800 R225401134-012 R225401134-028 R225401614-000

10. Removal of the Side Wall (06U-1)

NOTE: **See TABLE 3219 for the references for the replacement procedures of permanent installed parts.**

IPL FIG. ITEM	COMPONENT PART NAME	IPL FIG. ITEM	REPLACEMENT PART NAME	SEE REPAIR TASK
06U-001 06U-250	Side Wall Post Assembly	06U-255	Nut	Replacement of the Riveted Parts

Table 3219
Reference list for the replacement of permanent installed parts

(a) Remove and disassemble the handle assembly 06U-310 as follows:

1 Remove the security pins 06U-330 from the handle assembly 06U-310.

2 Remove the handle assembly 06U-310 from the aft side wall assembly 06U-010.

3 Remove the special screws 06U-320 and the special washers 06U-340 from the aft side wall assembly 06U-010.

(b) Remove the screws 06U-261, the washers 06U-231 and the support 06U-350 from the aft side wall assembly 06U-010.

(c) Remove the toilet seat cover dispenser 06U-290 from the screws 06U-300.

(d) Remove the screws 06U-300 from the aft side wall assembly 06U-010.

(e) Remove the studs 06U-240 and the washers 06U-230 from the cover oxygen container assy 06U-160.

(f) Remove the screws 06U-180, the nuts 06U-190 and the cover oxygen container assy 06U-160 from the angle 06U-170.

(g) Remove the screws 06U-220, the washers 06U-230 and the angle 06U-170 from the aft side wall assembly 06U-010.

(h) Remove the ground cable from the oxygen container assy 06U-210.

(i) Remove the screws 06U-220, 06U-222, the washers 06U-230 and the oxygen container assy 06U-210 from the angles 06U-200.

(j) Remove the screws 06U-220, the washers 06U-230 and the angles 06U-200 from the aft side wall assembly 06U-010.

(k) Remove the screws 06U-380, the washers 06U-390 and the angle 06U-370 from the aft side wall assembly 06U-010.

(l) Remove the caps 06U-270, the screws 06U-260, 06U-280, the washers 06U-230 and the post assembly 06U-250.

(m) Disassemble the post assembly 06U-250 as follows:

1 Remove the screws 06U-253.

(n) Remove the screws 06U-030 and the fittings 06U-020 from the aft side wall assembly 06U-010.

(o) If necessary, remove the kick strip 06U-510 from the aft side wall assembly 06U-010.

TASK 25-41-51-000-804-W01
D2549010608200 D2549010608400 D2549010609400 D2549020510800 D2549020511200 D2549020511800 D2549020512400 D2549020802800 D2549030503800 D2549030611800 D2549030614600 R225401168-002 R225401168-022 R225401183-002 R225401605-002

40. Removal of the Side Wall

A. General

A complete disassembly of the component is not necessary and not recommended.

Do not disassemble the component more than it is necessary for:

- Cleaning
- Visual Inspection
- Replacement of defective parts.

B. Job Set-up Information
(1) Consumable Materials

REFERENCE	DESIGNATION
08-007	Sealant, High Temperature

Table 3220
Consumable Materials

(2) Fixtures, Tools, Test and Support Equipment

REFERENCE	DESIGNATION
	hot air blower

Table 3221
Fixtures, Tools, Test and Support Equipment

C. Procedure

WARNING: **BE CAREFUL WHEN YOU USE SOLVENTS/CLEANING AGENTS, SEALANTS AND OTHER MATERIALS. OBEY THE MATERIAL MANUFACTURER'S INSTRUCTIONS AND THE LOCAL REGULATIONS. MAKE SURE THAT THERE IS A GOOD FLOW OF AIR THROUGH THE WORK AREA. DO NOT BREATHE THE FUMES. DO NOT SMOKE. DO NOT USE THESE MATERIALS NEAR A FLAME, SPARKS OR SOURCES OF HEAT. USE PROTECTIVE CLOTHING, GOGGLES AND GLOVES. IF YOU GET ONE OF THESE MATERIALS ON YOUR SKIN OR IN YOUR EYES, FLUSH IT AWAY WITH A FLOW OF CLEAN WATER. IF YOU GET ONE OF THESE MATERIALS IN YOUR MOUTH, GET IMMEDIATE MEDICAL AID. IN GENERAL, THESE MATERIALS ARE POISONOUS, FLAMMABLE AND SKIN IRRITANTS.**

WARNING: **KEEP ALL HYDROCARBONS (FUELS, LUBRICANTS, ETC.) AWAY FROM ALL SOURCES OF OXYGEN. OXYGEN BECOMES EXPLOSIVE WHEN IT TOUCHES HYDROCARBONS.**

WARNING: **TO PREVENT CONTAMINATION OF THE OXYGEN SYSTEM, MAKE SURE THAT YOUR HANDS AND ALL THE TOOLS ARE CLEAN.**

CAUTION: **PUT DRY, CLEAN, METAL OR PLASTIC PLUGS ON ALL PIPES OR UNITS REMOVED TEMPORARILY. PUT EACH PIPE OR UNIT IN A SEALED VINYL BAG. UNWANTED MATERIALS IN THE OXYGEN SYSTEM CAN DAMAGE THE SYSTEM.**

CAUTION: **DO ALL THE WORK ON A CLEAN, SOFT SURFACE TO PREVENT DAMAGE TO THE COMPONENTS.**

SUB TASK 25-41-51-010-122-A01
D2549020802000 D2549030611800 R225401629-000

1. Removal of the Side Wall (06V-1)

NOTE: **See TABLE 3222 for the references for the replacement procedures of permanent installed parts.**

IPL FIG. ITEM	COMPONENT PART NAME	IPL FIG. ITEM	REPLACEMENT PART NAME	SEE REPAIR TASK
06V-001 06V-250	Side Wall Post Assembly	06V-270	Nut	Replacement of the Riveted Parts

Table 3222
Reference list for the replacement of permanent installed parts

(a) Remove and disassemble the handle assemblies 06V-120 as follows:

1 Remove the security pins 06V-140 from the handle assemblies 06V-120.

2 Remove the handle assemblies 06V-120 from the aft side wall assembly 06V-010.

3 Remove the special screws 06V-130 and the special washers 06V-150 from the aft side wall assembly 06V-010.

(b) Remove the studs 06V-240 and the washers 06V-230 from the cover oxygen container assy 06V-160.

(c) Remove the screws 06V-180, the nuts 06V-190 and the cover oxygen container assy 06V-160 from the angle 06V-170.

(d) Remove the screws 06V-220, the washers 06V-230 and the angle 06V-170 from the aft side wall assembly 06V-010.

(e) Remove the ground cable from the oxygen container assy 06V-210.

(f) Remove the screws 06V-220, 06V-222, the washers 06V-230 and the oxygen container assy 06V-210 from the angles 06V-200.

(g) Remove the screws 06V-220, the washers 06V-230 and the angles 06V-200 from the aft side wall assembly 06V-010.

(h) Remove the screws 06V-460, the nuts 06V-470, the plates 06V-450 and the single door emergency unlocking device assembly 06V-380 from the post assembly 06V-250.

(i) Disassemble the single door emergency unlocking device assembly 06V-380 as follows:

WARNING: BE CAREFUL WHEN YOU USE MATERIAL NO. 08-007 SEALANT, HIGH TEMPERATURE. OBEY THE MATERIAL MANUFACTURER'S INSTRUCTIONS.

1 Remove the bolt 06V-440 and the emergency unlocking-device strike 06V-400 from the emergency unlocking-device housing 06V-390.

NOTE: If necessary use a hot air blower to heat up the Material No. 08-007 Sealant, High Temperature to remove the bolt 06V-440.

WARNING: **BE CAREFUL WHEN YOU USE MATERIAL NO. 08-007 SEALANT, HIGH TEMPERATURE. OBEY THE MATERIAL MANUFACTURER'S INSTRUCTIONS.**

2 Remove the pin 06V-420, the snap catch 06V-430 and the emergency unlocking-device pivot 06V-410 from the emergency unlocking-device housing 06V-390.

NOTE: **If necessary use a hot air blower to heat up the Material No. 08-007 Sealant, High Temperature to remove the snap catch 06V-430 and the pin 06V-420.**

(j) Remove the caps 06V-290, the screws 06V-280, 06V-300, the washers 06V-230 and the post assembly 06V-250.

(k) Disassemble the post assembly 06V-250 as follows:

1 Remove the screws 06V-260.

(l) Remove the screws 06V-030 and the fittings 06V-020 from the brackets 06V-013.

(m) Remove the brackets 06V-013, 06V-017 from the aft side wall assembly 06V-010.

SUB TASK 25-41-51-010-122-B01
D2549020511800 R225401605-002

2. Removal of the Side Wall (06V-1)

NOTE: **See TABLE 3223 for the references for the replacement procedures of permanent installed parts.**

IPL FIG. ITEM	COMPONENT PART NAME	IPL FIG. ITEM	REPLACEMENT PART NAME	SEE REPAIR TASK
06V-001 06V-250	Side Wall Post Assembly	06V-270	Nut	Replacement of the Riveted Parts

Table 3223
Reference list for the replacement of permanent installed parts

(a) Remove and disassemble the handle assemblies 06V-120 as follows:

1 Remove the security pins 06V-140 from the handle assemblies 06V-120.

2 Remove the handle assemblies 06V-120 from the aft side wall assembly 06V-010.

3 Remove the special screws 06V-130 and the special washers 06V-150 from the aft side wall assembly 06V-010.

(b) Remove the screw 06V-340 and the coat hook 06V-330.

(c) Remove the studs 06V-240 and the washers 06V-230 from the cover oxygen container assy 06V-160.

(d) Remove the screws 06V-180, the nuts 06V-190 and the cover oxygen container assy 06V-160 from the angle 06V-170.

(e) Remove the screws 06V-220, the washers 06V-230 and the angle 06V-170 from the aft side wall assembly 06V-010.

(f) Remove the ground cable from the oxygen container assy 06V-210.

(g) Remove the screws 06V-220, the washers 06V-230 and the oxygen container assy 06V-210 from the angles 06V-200.

(h) Remove the screws 06V-220, the washers 06V-230 and the angles 06V-200 from the aft side wall assembly 06V-010.

(i) Remove the screws 06V-360, the washers 06V-370 and the angle 06V-350 from the aft side wall assembly 06V-010.

(j) Remove the caps 06V-290, the screws 06V-280, 06V-300, the washers 06V-230 and the post assembly 06V-250.

(k) Disassemble the post assembly 06V-250 as follows:

1 Remove the screws 06V-260.

(l) Remove the screws 06V-030 and the fittings 06V-020 from the aft side wall assembly 06V-010.

SUB TASK 25-41-51-010-122-C01
D2549010608400 D2549030503800

3. Removal of the Side Wall (06V-1)

NOTE: **See TABLE 3224 for the references for the replacement procedures of permanent installed parts.**

IPL FIG. ITEM	COMPONENT PART NAME	IPL FIG. ITEM	REPLACEMENT PART NAME	SEE REPAIR TASK
06V-001 06V-250	Side Wall Post Assembly	06V-270	Nut	Replacement of the Riveted Parts

Table 3224
Reference list for the replacement of permanent installed parts

(a) Remove and disassemble the handle assemblies 06V-120 as follows:

1 Remove the security pins 06V-140 from the handle assemblies 06V-120.

2 Remove the handle assemblies 06V-120 from the aft side wall assembly 06V-010.

3 Remove the special screws 06V-130 and the special washers 06V-150 from the aft side wall assembly 06V-010.

(b) Remove the toilet seat cover dispenser 06V-310 from the screws 06V-320.

(c) Remove the screws 06V-320 from the aft side wall assembly 06V-010.

(d) Remove the studs 06V-240 and the washers 06V-230 from the cover oxygen container assy 06V-160.

(e) Remove the screws 06V-180, the nuts 06V-190 and the cover oxygen container assy 06V-160 from the angle 06V-170.

(f) Remove the screws 06V-220, the washers 06V-230 and the angle 06V-170 from the aft side wall assembly 06V-010.

(g) Remove the ground cable from the oxygen container assy 06V-210.

(h) Remove the screws 06V-220, the washers 06V-230 and the oxygen container assy 06V-210 from the angles 06V-200.

(i) Remove the screws 06V-220, the washers 06V-230 and the angles 06V-200 from the aft side wall assembly 06V-010.

(j) Remove the caps 06V-290, the screws 06V-280, 06V-300, the washers 06V-230 and the post assembly 06V-250.

(k) Disassemble the post assembly 06V-250 as follows:

1 Remove the screws 06V-260.

(l) Remove the screws 06V-030 and the fittings 06V-020 from the brackets 06V-013.

(m) Remove the brackets 06V-013, 06V-017 from the aft side wall assembly 06V-010.

SUB TASK 25-41-51-010-122-D01
D2549010608200

4. Removal of the Side Wall (06V-1)

NOTE: **See TABLE 3225 for the references for the replacement procedures of permanent installed parts.**

IPL FIG. ITEM	COMPONENT PART NAME	IPL FIG. ITEM	REPLACEMENT PART NAME	SEE REPAIR TASK
06V-001 06V-250	Side Wall Post Assembly	06V-270	Nut	Replacement of the Riveted Parts

Table 3225
Reference list for the replacement of permanent installed parts

(a) Remove and disassemble the handle assemblies 06V-120 as follows:

1 Remove the security pins 06V-140 from the handle assemblies 06V-120.

2 Remove the handle assemblies 06V-120 from the aft side wall assembly 06V-010.

3 Remove the special screws 06V-130 and the special washers 06V-150 from the aft side wall assembly 06V-010.

(b) Remove the studs 06V-240 and the washers 06V-230 from the cover oxygen container assy 06V-160.

(c) Remove the screws 06V-180, the nuts 06V-190 and the cover oxygen container assy 06V-160 from the angle 06V-170.

(d) Remove the screws 06V-220, the washers 06V-230 and the angle 06V-170 from the aft side wall assembly 06V-010.

(e) Remove the ground cable from the oxygen container assy 06V-210.

(f) Remove the screws 06V-220, the washers 06V-230 and the oxygen container assy 06V-210 from the angles 06V-200.

(g) Remove the screws 06V-220, the washers 06V-230 and the angles 06V-200 from the aft side wall assembly 06V-010.

(h) Remove the caps 06V-290, the screws 06V-280, 06V-300, the washers 06V-230 and the post assembly 06V-250.

(i) Disassemble the post assembly 06V-250 as follows:

1 Remove the screws 06V-260.

(j) Remove the screws 06V-030 and the fittings 06V-020 from the brackets 06V-013.

(k) Remove the brackets 06V-013, 06V-017 from the aft side wall assembly 06V-010.

SUB TASK 25-41-51-010-122-E01
D2549010609400 D2549020802800 R225401183-002

5. Removal of the Side Wall (06V-1)

NOTE: **See TABLE 3226 for the references for the replacement procedures of permanent installed parts.**

IPL FIG. ITEM	COMPONENT PART NAME	IPL FIG. ITEM	REPLACEMENT PART NAME	SEE REPAIR TASK
06V-001 06V-250	Side Wall Post Assembly	06V-270	Nut	Replacement of the Riveted Parts

Table 3226
Reference list for the replacement of permanent installed parts

(a) Remove and disassemble the handle assemblies 06V-120 as follows:

1 Remove the security pins 06V-140 from the handle assemblies 06V-120.

2 Remove the handle assemblies 06V-120 from the aft side wall assembly 06V-010.

3 Remove the special screws 06V-130 and the special washers 06V-150 from the aft side wall assembly 06V-010.

(b) Remove the toilet seat cover dispenser 06V-310 from the screws 06V-320.

(c) Remove the screws 06V-320 from the aft side wall assembly 06V-010.

(d) Remove the studs 06V-240 and the washers 06V-230 from the cover oxygen container assy 06V-160.

(e) Remove the screws 06V-180, the nuts 06V-190 and the cover oxygen container assy 06V-160 from the angle 06V-170.

(f) Remove the screws 06V-220, 06V-222, the washers 06V-230 and the angle 06V-170 from the aft side wall assembly 06V-010.

(g) Remove the ground cable from the oxygen container assy 06V-210.

(h) Remove the screws 06V-220, the washers 06V-230 and the oxygen container assy 06V-210 from the angles 06V-200.

(i) Remove the screws 06V-220, the washers 06V-230 and the angles 06V-200 from the aft side wall assembly 06V-010.

(j) Remove the screws 06V-360, the washers 06V-370 and the angle 06V-350 from the aft side wall assembly 06V-010.

(k) Remove the caps 06V-290, the screws 06V-280, 06V-300, the washers 06V-230 and the post assembly 06V-250.

(l) Disassemble the post assembly 06V-250 as follows:

1 Remove the screws 06V-260.

(m) Remove the screws 06V-030 and the fittings 06V-020 from the aft side wall assembly 06V-010.

SUB TASK 25-41-51-010-122-F01
D2549020512400 R225401168-002 R225401168-022

6. Removal of the Side Wall (06V-1)

NOTE: **See TABLE 3227 for the references for the replacement procedures of permanent installed parts.**

IPL FIG. ITEM	COMPONENT PART NAME	IPL FIG. ITEM	REPLACEMENT PART NAME	SEE REPAIR TASK
06V-001 06V-250	Side Wall Post Assembly	06V-270	Nut	Replacement of the Riveted Parts

Table 3227
Reference list for the replacement of permanent installed parts

(a) Remove and disassemble the handle assemblies 06V-120 as follows:

1 Remove the security pins 06V-140 from the handle assemblies 06V-120.

2 Remove the handle assemblies 06V-120 from the aft side wall assembly 06V-010.

3 Remove the special screws 06V-130 and the special washers 06V-150 from the aft side wall assembly 06V-010.

(b) Remove the studs 06V-240 and the washers 06V-230 from the cover oxygen container assy 06V-160.

(c) Remove the screws 06V-180, the nuts 06V-190 and the cover oxygen container assy 06V-160 from the angle 06V-170.

(d) Remove the screws 06V-220, the washers 06V-230 and the angle 06V-170 from the aft side wall assembly 06V-010.

(e) Remove the ground cable from the oxygen container assy 06V-210.

(f) Remove the screws 06V-220, the washers 06V-230 and the oxygen container assy 06V-210 from the angles 06V-200.

(g) Remove the screws 06V-220, the washers 06V-230 and the angles 06V-200 from the aft side wall assembly 06V-010.

(h) Remove the screws 06V-360, the washers 06V-370 and the angle 06V-350 from the aft side wall assembly 06V-010.

(i) Remove the caps 06V-290, the screws 06V-280, 06V-300, the washers 06V-230 and the post assembly 06V-250.

(j) Disassemble the post assembly 06V-250 as follows:

1 Remove the screws 06V-260.

(k) Remove the screws 06V-030 and the fittings 06V-020 from the aft side wall assembly 06V-010.

SUB TASK 25-41-51-010-122-G01
D2549020511200

7. Removal of the Side Wall (06V-1)

NOTE: **See TABLE 3228 for the references for the replacement procedures of permanent installed parts.**

IPL FIG. ITEM	COMPONENT PART NAME	IPL FIG. ITEM	REPLACEMENT PART NAME	SEE REPAIR TASK
06V-001 06V-250	Side Wall Post Assembly	06V-270	Nut	Replacement of the Riveted Parts

Table 3228
Reference list for the replacement of permanent installed parts

(a) Remove and disassemble the handle assemblies 06V-120 as follows:

1 Remove the security pins 06V-140 from the handle assemblies 06V-120.

2 Remove the handle assemblies 06V-120 from the aft side wall assembly 06V-010.

3 Remove the special screws 06V-130 and the special washers 06V-150 from the aft side wall assembly 06V-010.

(b) Remove the studs 06V-240 and the washers 06V-230 from the cover oxygen container assy 06V-160.

(c) Remove the screws 06V-180, the nuts 06V-190 and the cover oxygen container assy 06V-160 from the angle 06V-170.

(d) Remove the screws 06V-220, the washers 06V-230 and the angle 06V-170 from the aft side wall assembly 06V-010.

(e) Remove the ground cable from the oxygen container assy 06V-210.

(f) Remove the screws 06V-220, the washers 06V-230 and the oxygen container assy 06V-210 from the angles 06V-200.

(g) Remove the screws 06V-220, the washers 06V-230 and the angles 06V-200 from the aft side wall assembly 06V-010.

(h) Remove the screws 06V-360, the washers 06V-370 and the angle 06V-350 from the aft side wall assembly 06V-010.

(i) Remove the caps 06V-290, the screws 06V-280, 06V-300, the washers 06V-230 and the post assembly 06V-250.

(j) Disassemble the post assembly 06V-250 as follows:

1 Remove the screws 06V-260.

(k) Remove the screws 06V-030 and the fittings 06V-020 from the aft side wall assembly 06V-010.

SUB TASK 25-41-51-010-122-H01
D2549020510800 D2549030614600

8. Removal of the Side Wall (06V-1)

NOTE: **See TABLE 3229 for the references for the replacement procedures of permanent installed parts.**

IPL FIG. ITEM	COMPONENT PART NAME	IPL FIG. ITEM	REPLACEMENT PART NAME	SEE REPAIR TASK
06V-001 06V-250	Side Wall Post Assembly	06V-270	Nut	Replacement of the Riveted Parts

Table 3229
Reference list for the replacement of permanent installed parts

(a) Remove and disassemble the handle assemblies 06V-120 as follows:

1 Remove the security pins 06V-140 from the handle assemblies 06V-120.

2 Remove the handle assemblies 06V-120 from the aft side wall assembly 06V-010.

3 Remove the special screws 06V-130 and the special washers 06V-150 from the aft side wall assembly 06V-010.

(b) Remove the studs 06V-240 and the washers 06V-230 from the cover oxygen container assy 06V-160.

(c) Remove the screws 06V-180, the nuts 06V-190 and the cover oxygen container assy 06V-160 from the angle 06V-170.

(d) Remove the screws 06V-220, the washers 06V-230 and the angle 06V-170 from the aft side wall assembly 06V-010.

(e) Remove the ground cable from the oxygen container assy 06V-210.

(f) Remove the screws 06V-220, the washers 06V-230 and the oxygen container assy 06V-210 from the angles 06V-200.

(g) Remove the screws 06V-220, the washers 06V-230 and the angles 06V-200 from the aft side wall assembly 06V-010.

(h) Remove the screws 06V-360, the washers 06V-370 and the angle 06V-350 from the aft side wall assembly 06V-010.

(i) Remove the caps 06V-290, the screws 06V-280, 06V-300, the washers 06V-230 and the post assembly 06V-250.

(j) Disassemble the post assembly 06V-250 as follows:

1 Remove the screws 06V-260.

(k) Remove the screws 06V-030 and the fittings 06V-020 from the aft side wall assembly 06V-010.

TASK 25-41-51-000-804-X01
D2549010610000 D2549010610200 D2549010610400 D2549020510400 D2549020513600 D2549020711600 D2549020800800 D2549020801600 D2549020802200 D2549020803000 D2549020803800 D2549030610400 D2549030613200 D2549030613800 R225401172-018

41. Removal of the Side Wall

A. General

A complete disassembly of the component is not necessary and not recommended.

Do not disassemble the component more than it is necessary for:

- Cleaning
- Visual Inspection
- Replacement of defective parts.

B. Job Set-up Information
(1) Consumable Materials

REFERENCE	DESIGNATION
08-007	Sealant, High Temperature

Table 3230
Consumable Materials

(2) Fixtures, Tools, Test and Support Equipment

REFERENCE	DESIGNATION
	hot air blower

Table 3231
Fixtures, Tools, Test and Support Equipment

C. Procedure

WARNING: **BE CAREFUL WHEN YOU USE SOLVENTS/CLEANING AGENTS, SEALANTS AND OTHER MATERIALS. OBEY THE MATERIAL MANUFACTURER'S INSTRUCTIONS AND THE LOCAL REGULATIONS. MAKE SURE THAT THERE IS A GOOD FLOW OF AIR THROUGH THE WORK AREA. DO NOT BREATHE THE FUMES. DO NOT SMOKE. DO NOT USE THESE MATERIALS NEAR A FLAME, SPARKS OR SOURCES OF HEAT. USE PROTECTIVE CLOTHING, GOGGLES AND GLOVES. IF YOU GET ONE OF THESE MATERIALS ON YOUR SKIN OR IN YOUR EYES, FLUSH IT AWAY WITH A FLOW OF CLEAN WATER. IF YOU GET ONE OF THESE MATERIALS IN YOUR MOUTH, GET IMMEDIATE MEDICAL AID. IN GENERAL, THESE MATERIALS ARE POISONOUS, FLAMMABLE AND SKIN IRRITANTS.**

WARNING: **KEEP ALL HYDROCARBONS (FUELS, LUBRICANTS, ETC.) AWAY FROM ALL SOURCES OF OXYGEN. OXYGEN BECOMES EXPLOSIVE WHEN IT TOUCHES HYDROCARBONS.**

WARNING: **TO PREVENT CONTAMINATION OF THE OXYGEN SYSTEM, MAKE SURE THAT YOUR HANDS AND ALL THE TOOLS ARE CLEAN.**

CAUTION: **PUT DRY, CLEAN, METAL OR PLASTIC PLUGS ON ALL PIPES OR UNITS REMOVED TEMPORARILY. PUT EACH PIPE OR UNIT IN A SEALED VINYL BAG. UNWANTED MATERIALS IN THE OXYGEN SYSTEM CAN DAMAGE THE SYSTEM.**

CAUTION: **DO ALL THE WORK ON A CLEAN, SOFT SURFACE TO PREVENT DAMAGE TO THE COMPONENTS.**

SUB TASK 25-41-51-010-123-A01
D2549010610000

1. Removal of the Side Wall (06W-1)

NOTE: **See TABLE 3232 for the references for the replacement procedures of permanent installed parts.**

IPL FIG. ITEM	COMPONENT PART NAME	IPL FIG. ITEM	REPLACEMENT PART NAME	SEE REPAIR TASK
06W-001 06W-270	Side Wall Post Assembly	06W-275	Nut	Replacement of the Riveted Parts

Table 3232
Reference list for the replacement of permanent installed parts

(a) Remove and disassemble the handle assembly 06W-140 as follows:

1 Remove the security pins 06W-160 from the handle assembly 06W-140.

2 Remove the handle assembly 06W-140 from the aft side wall assembly 06W-010.

3 Remove the bushing 06W-145 from the aft side wall assembly 06W-010.

4 Remove the special screws 06W-150 and the special washers 06W-170 from the aft side wall assembly 06W-010.

(b) Remove the screws 06W-281, the washers 06W-251 and the support 06W-330 from the aft side wall assembly 06W-010.

(c) Remove the toilet seat cover dispenser 06W-310 from the screws 06W-320.

(d) Remove the screws 06W-320 from the aft side wall assembly 06W-010.

(e) Remove the studs 06W-260 and the washers 06W-250 from the cover oxygen container assy 06W-180.

(f) Remove the screws 06W-200, the nuts 06W-210 and the cover oxygen container assy 06W-180 from the angle 06W-190.

(g) Remove the screws 06W-240, the washers 06W-250 and the angle 06W-190 from the aft side wall assembly 06W-010.

(h) Remove the ground cable from the oxygen container assy 06W-230.

(i) Remove the screws 06W-240, the washers 06W-250 and the oxygen container assy 06W-230 from the angles 06W-220.

(j) Remove the screws 06W-240, the washers 06W-250 and the angles 06W-220 from the aft side wall assembly 06W-010.

(k) Remove the screws 06W-390, the washers 06W-400 and the angle 06W-380 from the aft side wall assembly 06W-010.

(l) Remove the screws 06W-490, the nuts 06W-500, the plates 06W-480 and the single door emergency unlocking device assembly 06W-410 from the post assembly 06W-270.

(m) Disassemble the single door emergency unlocking device assembly 06W-410 as follows:

WARNING: **BE CAREFUL WHEN YOU USE MATERIAL NO. 08-007 SEALANT, HIGH TEMPERATURE. OBEY THE MATERIAL MANUFACTURER'S INSTRUCTIONS.**

1 Remove the bolt 06W-470 and the emergency unlocking-device strike 06W-430 from the emergency unlocking-device housing 06W-420.

NOTE: **If necessary use a hot air blower to heat up the Material No. 08-007 Sealant, High Temperature to remove the bolt 06W-470.**

WARNING: **BE CAREFUL WHEN YOU USE MATERIAL NO. 08-007 SEALANT, HIGH TEMPERATURE. OBEY THE MATERIAL MANUFACTURER'S INSTRUCTIONS.**

2 Remove the pin 06W-450, the snap catch 06W-460 and the emergency unlocking-device pivot 06W-440 from the emergency unlocking-device housing 06W-420.

NOTE: **If necessary use a hot air blower to heat up the Material No. 08-007 Sealant, High Temperature to remove the snap catch 06W-460 and the pin 06W-450.**

(n) Remove the caps 06W-290, the screws 06W-280, 06W-300, the washers 06W-250 and the post assembly 06W-270.

(o) Disassemble the post assembly 06W-270 as follows:

1 Remove the screws 06W-273.

(p) Remove the screws 06W-050 and the fittings 06W-040 from the aft side wall assembly 06W-010.

SUB TASK 25-41-51-010-123-B01
D2549030610400 D2549030613200

2. Removal of the Side Wall (06W-1)

NOTE: **See TABLE 3233 for the references for the replacement procedures of permanent installed parts.**

IPL FIG. ITEM	COMPONENT PART NAME	IPL FIG. ITEM	REPLACEMENT PART NAME	SEE REPAIR TASK
06W-001 06W-270	Side Wall Post Assembly	06W-275	Nut	Replacement of the Riveted Parts

Table 3233
Reference list for the replacement of permanent installed parts

(a) Remove and disassemble the handle assembly 06W-140 as follows:

1 Remove the security pins 06W-160 from the handle assembly 06W-140.

2 Remove the handle assembly 06W-140 from the aft side wall assembly 06W-010.

3 Remove the bushing 06W-145 from the aft side wall assembly 06W-010.

4 Remove the special screws 06W-150 and the special washers 06W-170 from the aft side wall assembly 06W-010.

(b) Remove the screws 06W-281, the washers 06W-251 and the support 06W-330 from the aft side wall assembly 06W-010.

(c) Remove the toilet seat cover dispenser 06W-310 from the screws 06W-320.

(d) Remove the screws 06W-320 from the aft side wall assembly 06W-010.

(e) Remove the studs 06W-260 and the washers 06W-250 from the cover oxygen container assy 06W-180.

(f) Remove the screws 06W-200, the nuts 06W-210 and the cover oxygen container assy 06W-180 from the angle 06W-190.

(g) Remove the screws 06W-240, the washers 06W-250 and the angle 06W-190 from the aft side wall assembly 06W-010.

(h) Remove the ground cable from the oxygen container assy 06W-230.

(i) Remove the screws 06W-240, the washers 06W-250 and the oxygen container assy 06W-230 from the angles 06W-220.

(j) Remove the screws 06W-240, the washers 06W-250 and the angles 06W-220 from the aft side wall assembly 06W-010.

(k) Remove the screws 06W-390, the washers 06W-400 and the angle 06W-380 from the aft side wall assembly 06W-010.

(l) Remove the caps 06W-290, the screws 06W-280, 06W-300, the washers 06W-250 and the post assembly 06W-270.

(m) Disassemble the post assembly 06W-270 as follows:

1 Remove the screws 06W-273.

(n) Remove the screws 06W-050 and the fittings 06W-040 from the aft side wall assembly 06W-010.

SUB TASK 25-41-51-010-123-C01
D2549020801600

3. Removal of the Side Wall (06W-1)

NOTE: **See TABLE 3234 for the references for the replacement procedures of permanent installed parts.**

IPL FIG. ITEM	COMPONENT PART NAME	IPL FIG. ITEM	REPLACEMENT PART NAME	SEE REPAIR TASK
06W-001 06W-270	Side Wall Post Assembly	06W-275	Nut	Replacement of the Riveted Parts

Table 3234
Reference list for the replacement of permanent installed parts

(a) Remove and disassemble the handle assembly 06W-140 as follows:

1 Remove the security pins 06W-160 from the handle assembly 06W-140.

2 Remove the handle assembly 06W-140 from the aft side wall assembly 06W-010.

3 Remove the bushing 06W-145 from the aft side wall assembly 06W-010.

4 Remove the special screws 06W-150 and the special washers 06W-170 from the aft side wall assembly 06W-010.

(b) Remove the screws 06W-281, the washers 06W-251 and the support 06W-330 from the aft side wall assembly 06W-010.

(c) Remove the toilet seat cover dispenser 06W-310 from the screws 06W-320.

(d) Remove the screws 06W-320 from the aft side wall assembly 06W-010.

(e) Remove the studs 06W-260 and the washers 06W-250 from the cover oxygen container assy 06W-180.

(f) Remove the screws 06W-200, the nuts 06W-210 and the cover oxygen container assy 06W-180 from the angle 06W-190.

(g) Remove the screws 06W-240, the washers 06W-250 and the angle 06W-190 from the aft side wall assembly 06W-010.

(h) Remove the ground cable from the oxygen container assy 06W-230.

(i) Remove the screws 06W-240, the washers 06W-250 and the oxygen container assy 06W-230 from the angles 06W-220.

(j) Remove the screws 06W-240, the washers 06W-250 and the angles 06W-220 from the aft side wall assembly 06W-010.

(k) Remove the screws 06W-390, the washers 06W-400 and the angle 06W-380 from the aft side wall assembly 06W-010.

(l) Remove the caps 06W-290, the screws 06W-280, 06W-300, the washers 06W-250 and the post assembly 06W-270.

(m) Disassemble the post assembly 06W-270 as follows:

1 Remove the screws 06W-273.

(n) Remove the screws 06W-050 and the fittings 06W-040 from the aft side wall assembly 06W-010.

SUB TASK 25-41-51-010-123-D01
D2549020513600

4. Removal of the Side Wall (06W-1)

NOTE: **See TABLE 3235 for the references for the replacement procedures of permanent installed parts.**

IPL FIG. ITEM	COMPONENT PART NAME	IPL FIG. ITEM	REPLACEMENT PART NAME	SEE REPAIR TASK
06W-001 06W-270	Side Wall Post Assembly	06W-275	Nut	Replacement of the Riveted Parts

Table 3235
Reference list for the replacement of permanent installed parts

(a) Remove and disassemble the handle assembly 06W-140 as follows:

1 Remove the security pins 06W-160 from the handle assembly 06W-140.

2 Remove the handle assembly 06W-140 from the aft side wall assembly 06W-010.

3 Remove the bushing 06W-145 from the aft side wall assembly 06W-010.

4 Remove the special screws 06W-150 and the special washers 06W-170 from the aft side wall assembly 06W-010.

(b) Remove the screws 06W-281, the washers 06W-251 and the support 06W-330 from the aft side wall assembly 06W-010.

(c) Remove the studs 06W-260 and the washers 06W-250 from the cover oxygen container assy 06W-180.

(d) Remove the screws 06W-200, the nuts 06W-210 and the cover oxygen container assy 06W-180 from the angle 06W-190.

(e) Remove the screws 06W-240, the washers 06W-250 and the angle 06W-190 from the aft side wall assembly 06W-010.

(f) Remove the ground cable from the oxygen container assy 06W-230.

(g) Remove the screws 06W-240, the washers 06W-250 and the oxygen container assy 06W-230 from the angles 06W-220.

(h) Remove the screws 06W-240, the washers 06W-250 and the angles 06W-220 from the aft side wall assembly 06W-010.

(i) Remove the screws 06W-390, the washers 06W-400 and the angle 06W-380 from the aft side wall assembly 06W-010.

(j) Remove the caps 06W-290, the screws 06W-280, 06W-300, the washers 06W-250 and the post assembly 06W-270.

(k) Disassemble the post assembly 06W-270 as follows:

1 Remove the screws 06W-273.

(l) Remove the screws 06W-050 and the fittings 06W-040 from the aft side wall assembly 06W-010.

SUB TASK 25-41-51-010-123-E01
D2549020802200

5. Removal of the Side Wall (06W-1)

NOTE: **See TABLE 3236 for the references for the replacement procedures of permanent installed parts.**

IPL FIG. ITEM	COMPONENT PART NAME	IPL FIG. ITEM	REPLACEMENT PART NAME	SEE REPAIR TASK
06W-001 06W-270	Side Wall Post Assembly	06W-275	Nut	Replacement of the Riveted Parts

Table 3236
Reference list for the replacement of permanent installed parts

(a) Remove and disassemble the handle assemblies 06W-340 as follows:

1 Remove the security pins 06W-360 from the handle assemblies 06W-340.

2 Remove the handle assemblies 06W-340 from the aft side wall assembly 06W-010.

3 Remove the special screws 06W-350 and the special washers 06W-370 from the aft side wall assembly 06W-010.

(b) Remove the toilet seat cover dispenser 06W-310 from the screws 06W-320.

(c) Remove the screws 06W-320 from the aft side wall assembly 06W-010.

(d) Remove the studs 06W-260 and the washers 06W-250 from the cover oxygen container assy 06W-180.

(e) Remove the screws 06W-200, the nuts 06W-210 and the cover oxygen container assy 06W-180 from the angle 06W-190.

(f) Remove the screws 06W-240, the washers 06W-250 and the angle 06W-190 from the aft side wall assembly 06W-010.

(g) Remove the ground cable from the oxygen container assy 06W-230.

(h) Remove the screws 06W-240, the washers 06W-250 and the oxygen container assy 06W-230 from the angles 06W-220.

(i) Remove the screws 06W-240, the washers 06W-250 and the angles 06W-220 from the aft side wall assembly 06W-010.

(j) Remove the screws 06W-390, the washers 06W-400 and the angle 06W-380 from the aft side wall assembly 06W-010.

(k) Remove the caps 06W-290, the screws 06W-280, 06W-300, the washers 06W-250 and the post assembly 06W-270.

(l) Disassemble the post assembly 06W-270 as follows:

1 Remove the screws 06W-273.

(m) Remove the screws 06W-050 and the fittings 06W-040 from the aft side wall assembly 06W-010.

SUB TASK 25-41-51-010-123-F01

D2549020510400 D2549020800800 D2549020803800 D2549030613800 R225401172-018

6. Removal of the Side Wall (06W-1)

NOTE: **See TABLE 3237 for the references for the replacement procedures of permanent installed parts.**

IPL FIG. ITEM	COMPONENT PART NAME	IPL FIG. ITEM	REPLACEMENT PART NAME	SEE REPAIR TASK
06W-001 06W-270	Side Wall Post Assembly	06W-275	Nut	Replacement of the Riveted Parts

Table 3237
Reference list for the replacement of permanent installed parts

(a) Remove and disassemble the handle assemblies 06W-340 as follows:

1 Remove the security pins 06W-360 from the handle assemblies 06W-340.

2 Remove the handle assemblies 06W-340 from the aft side wall assembly 06W-010.

3 Remove the special screws 06W-350 and the special washers 06W-370 from the aft side wall assembly 06W-010.

(b) Remove the toilet seat cover dispenser 06W-310 from the screws 06W-320.

(c) Remove the screws 06W-320 from the aft side wall assembly 06W-010.

(d) Remove the studs 06W-260 and the washers 06W-250 from the cover oxygen container assy 06W-180.

(e) Remove the screws 06W-200, the nuts 06W-210 and the cover oxygen container assy 06W-180 from the angle 06W-190.

(f) Remove the screws 06W-240, the washers 06W-250 and the angle 06W-190 from the aft side wall assembly 06W-010.

(g) Remove the ground cable from the oxygen container assy 06W-230.

(h) Remove the screws 06W-240, 06W-242, the washers 06W-250 and the oxygen container assy 06W-230 from the angles 06W-220.

(i) Remove the screws 06W-240, the washers 06W-250 and the angles 06W-220 from the aft side wall assembly 06W-010.

(j) Remove the screws 06W-390, the washers 06W-400 and the angle 06W-380 from the aft side wall assembly 06W-010.

(k) Remove the caps 06W-290, the screws 06W-280, 06W-300, the washers 06W-250 and the post assembly 06W-270.

(l) Disassemble the post assembly 06W-270 as follows:

1 Remove the screws 06W-273.

(m) Remove the screws 06W-050 and the fittings 06W-040 from the aft side wall assembly 06W-010.

SUB TASK 25-41-51-010-123-G01
D2549010610200 D2549010610400 D2549020711600 D2549020803000

7. Removal of the Side Wall (06W-1)

NOTE: **See TABLE 3238 for the references for the replacement procedures of permanent installed parts.**

IPL FIG. ITEM	COMPONENT PART NAME	IPL FIG. ITEM	REPLACEMENT PART NAME	SEE REPAIR TASK
06W-001 06W-270	Side Wall Post Assembly	06W-275	Nut	Replacement of the Riveted Parts

Table 3238
Reference list for the replacement of permanent installed parts

(a) Remove and disassemble the handle assemblies 06W-340 as follows:

1 Remove the security pins 06W-360 from the handle assemblies 06W-340.

2 Remove the handle assemblies 06W-340 from the aft side wall assembly 06W-010.

3 Remove the special screws 06W-350 and the special washers 06W-370 from the aft side wall assembly 06W-010.

(b) Remove the studs 06W-260 and the washers 06W-250 from the cover oxygen container assy 06W-180.

(c) Remove the screws 06W-200, the nuts 06W-210 and the cover oxygen container assy 06W-180 from the angle 06W-190.

(d) Remove the screws 06W-240, the washers 06W-250 and the angle 06W-190 from the aft side wall assembly 06W-010.

(e) Remove the ground cable from the oxygen container assy 06W-230.

(f) Remove the screws 06W-240, the washers 06W-250 and the oxygen container assy 06W-230 from the angles 06W-220.

(g) Remove the screws 06W-240, the washers 06W-250 and the angles 06W-220 from the aft side wall assembly 06W-010.

(h) Remove the screws 06W-390, the washers 06W-400 and the angle 06W-380 from the aft side wall assembly 06W-010.

(i) Remove the caps 06W-290, the screws 06W-280, 06W-300, the washers 06W-250 and the post assembly 06W-270.

(j) Disassemble the post assembly 06W-270 as follows:

1 Remove the screws 06W-273.

(k) Remove the screws 06W-050 and the fittings 06W-040 from the aft side wall assembly 06W-010.

TASK 25-41-51-000-804-Y01
D2549010607600 D2549010608600 D2549010608800 D2549010609600 D2549020510600 D2549020513400 D2549020800000 D2549020800400 D2549020800600 D2549020803200 D2549020803400 D2549030400000 D2549030610000 D2549030614800 R225401137-016 R225401145-008 R225401145-014 R225401196-006 R225401196-038 R225401196-052 R225401199-004 R225401600-004 R225401693-000

42. Removal of the Side Wall

A. General

A complete disassembly of the component is not necessary and not recommended.

Do not disassemble the component more than it is necessary for:

- Cleaning
- Visual Inspection
- Replacement of defective parts.

B. Job Set-up Information
(1) Consumable Materials

REFERENCE	DESIGNATION
08-007	Sealant, High Temperature

Table 3239
Consumable Materials

(2) Fixtures, Tools, Test and Support Equipment

REFERENCE	DESIGNATION
	hot air blower

Table 3240
Fixtures, Tools, Test and Support Equipment

C. Procedure

WARNING: **BE CAREFUL WHEN YOU USE SOLVENTS/CLEANING AGENTS, SEALANTS AND OTHER MATERIALS. OBEY THE MATERIAL MANUFACTURER'S INSTRUCTIONS AND THE LOCAL REGULATIONS. MAKE SURE THAT THERE IS A GOOD FLOW OF AIR THROUGH THE WORK AREA. DO NOT BREATHE THE FUMES. DO NOT SMOKE. DO NOT USE THESE MATERIALS NEAR A FLAME, SPARKS OR SOURCES OF HEAT. USE PROTECTIVE CLOTHING, GOGGLES AND GLOVES. IF YOU GET ONE OF THESE MATERIALS ON YOUR SKIN OR IN YOUR EYES, FLUSH IT AWAY WITH A FLOW OF CLEAN WATER. IF YOU GET ONE OF THESE MATERIALS IN YOUR MOUTH, GET IMMEDIATE MEDICAL AID. IN GENERAL, THESE MATERIALS ARE POISONOUS, FLAMMABLE AND SKIN IRRITANTS.**

WARNING: **KEEP ALL HYDROCARBONS (FUELS, LUBRICANTS, ETC.) AWAY FROM ALL SOURCES OF OXYGEN. OXYGEN BECOMES EXPLOSIVE WHEN IT TOUCHES HYDROCARBONS.**

WARNING: **TO PREVENT CONTAMINATION OF THE OXYGEN SYSTEM, MAKE SURE THAT YOUR HANDS AND ALL THE TOOLS ARE CLEAN.**

CAUTION: **PUT DRY, CLEAN, METAL OR PLASTIC PLUGS ON ALL PIPES OR UNITS REMOVED TEMPORARILY. PUT EACH PIPE OR UNIT IN A SEALED VINYL BAG. UNWANTED MATERIALS IN THE OXYGEN SYSTEM CAN DAMAGE THE SYSTEM.**

CAUTION: **DO ALL THE WORK ON A CLEAN, SOFT SURFACE TO PREVENT DAMAGE TO THE COMPONENTS.**

SUB TASK 25-41-51-010-124-A01
D2549030614800

1. Removal of the Side Wall (06X-1)

NOTE: **See TABLE 3241 for the references for the replacement procedures of permanent installed parts.**

IPL FIG. ITEM	COMPONENT PART NAME	IPL FIG. ITEM	REPLACEMENT PART NAME	SEE REPAIR TASK
06X-001 06X-250	Side Wall Post Assembly	06X-270	Nut	Replacement of the Riveted Parts

Table 3241
Reference list for the replacement of permanent installed parts

(a) Remove and disassemble the handle assemblies 06X-350 as follows:

1 Remove the security pins 06X-370 from the handle assemblies 06X-350.

2 Remove the handle assemblies 06X-350 from the aft side wall assembly 06X-010.

3 Remove the special screws 06X-360 and the special washers 06X-380 from the aft side wall assembly 06X-010.

(b) Remove the toilet seat cover dispenser 06X-310 from the screws 06X-320.

(c) Remove the screws 06X-320 from the aft side wall assembly 06X-010.

(d) Remove the screw 06X-400 and the coat hook 06X-390.

(e) Remove the studs 06X-240 and the washers 06X-230 from the cover oxygen container assy 06X-160.

(f) Remove the screws 06X-180, the nuts 06X-190 and the cover oxygen container assy 06X-160 from the angle 06X-170.

(g) Remove the screws 06X-220, the washers 06X-230 and the angle 06X-170 from the aft side wall assembly 06X-010.

(h) Remove the ground cable from the oxygen container assy 06X-210.

(i) Remove the screws 06X-220, the washers 06X-230 and the oxygen container assy 06X-210 from the angles 06X-200.

(j) Remove the screws 06X-220, the washers 06X-230 and the angles 06X-200 from the aft side wall assembly 06X-010.

(k) Remove the screws 06X-280, the washers 06X-230 and the angle 06X-340 from the aft side wall assembly 06X-010.

(l) Remove the screws 06X-490, the nuts 06X-500, the plates 06X-480 and the single door emergency unlocking device assembly 06X-410 from the post assembly 06X-250.

(m) Disassemble the single door emergency unlocking device assembly 06X-410 as follows:

WARNING: **BE CAREFUL WHEN YOU USE MATERIAL NO. 08-007 SEALANT, HIGH TEMPERATURE. OBEY THE MATERIAL MANUFACTURER'S INSTRUCTIONS.**

1 Remove the bolt 06X-470 and the emergency unlocking-device strike 06X-430 from the emergency unlocking-device housing 06X-420.

NOTE: **If necessary use a hot air blower to heat up the Material No. 08-007 Sealant, High Temperature to remove the bolt 06X-470.**

WARNING: **BE CAREFUL WHEN YOU USE MATERIAL NO. 08-007 SEALANT, HIGH TEMPERATURE. OBEY THE MATERIAL MANUFACTURER'S INSTRUCTIONS.**

2 Remove the pin 06X-450, the snap catch 06X-460 and the emergency unlocking-device pivot 06X-440 from the emergency unlocking-device housing 06X-420.

NOTE: **If necessary use a hot air blower to heat up the Material No. 08-007 Sealant, High Temperature to remove the snap catch 06X-460 and the pin 06X-450.**

(n) Remove the caps 06X-290, the screws 06X-280, 06X-300, the washers 06X-230 and the post assembly 06X-250.

(o) Disassemble the post assembly 06X-250 as follows:

1 Remove the screws 06X-260.

(p) Remove the screws 06X-030 and the fittings 06X-020 from the aft side wall assembly 06X-010.

SUB TASK 25-41-51-010-124-B01
D2549010609600 D2549020513400 D2549020800600 R225401137-016 R225401196-006 R225401196-038 R225401196-052 R225401600-004

2. Removal of the Side Wall (06X-1)

NOTE: **See TABLE 3242 for the references for the replacement procedures of permanent installed parts.**

IPL FIG. ITEM	COMPONENT PART NAME	IPL FIG. ITEM	REPLACEMENT PART NAME	SEE REPAIR TASK
06X-001 06X-250	Side Wall Post Assembly	06X-270	Nut	Replacement of the Riveted Parts

Table 3242
Reference list for the replacement of permanent installed parts

(a) Remove and disassemble the handle assembly 06X-120 as follows:

1 Remove the security pins 06X-140 from the handle assembly 06X-120.

2 Remove the handle assembly 06X-120 from the aft side wall assembly 06X-010.

3 Remove the special screws 06X-130 and the special washers 06X-150 from the aft side wall assembly 06X-010.

(b) Remove the screws 06X-281, the washers 06X-231 and the support 06X-330 from the aft side wall assembly 06X-010.

(c) Remove the toilet seat cover dispenser 06X-310 from the screws 06X-320.

(d) Remove the screws 06X-320 from the aft side wall assembly 06X-010.

(e) Remove the studs 06X-240 and the washers 06X-230 from the cover oxygen container assy 06X-160.

(f) Remove the screws 06X-180, the nuts 06X-190 and the cover oxygen container assy 06X-160 from the angle 06X-170.

(g) Remove the screws 06X-220, the washers 06X-230 and the angle 06X-170 from the aft side wall assembly 06X-010.

(h) Remove the ground cable from the oxygen container assy 06X-210.

(i) Remove the screws 06X-220, 06X-225 the washers 06X-230, 06X-227 and the oxygen container assy 06X-210 from the angles 06X-200.

(j) Remove the screws 06X-220, the washers 06X-230 and the angles 06X-200 from the aft side wall assembly 06X-010.

(k) Remove the screws 06X-280, the washers 06X-230 and the angle 06X-340 from the aft side wall assembly 06X-010.

(l) Remove the caps 06X-290, the screws 06X-280, 06X-300, the washers 06X-230 and the post assembly 06X-250.

(m) Disassemble the post assembly 06X-250 as follows:

1 Remove the screws 06X-260.

(n) Remove the screws 06X-030 and the fittings 06X-020 from the aft side wall assembly 06X-010.

(o) Remove the bushing 06X-385.

(p) If necessary, remove the kick strip 06X-510 from the aft side wall assembly 06X-010.

SUB TASK 25-41-51-010-124-C01
D2549010607600 D2549010608800 R225401145-008 R225401145-014

3. Removal of the Side Wall (06X-1)

NOTE: **See TABLE 3243 for the references for the replacement procedures of permanent installed parts.**

IPL FIG. ITEM	COMPONENT PART NAME	IPL FIG. ITEM	REPLACEMENT PART NAME	SEE REPAIR TASK
06X-001 06X-250	Side Wall Post Assembly	06X-270	Nut	Replacement of the Riveted Parts

Table 3243
Reference list for the replacement of permanent installed parts

(a) Remove and disassemble the handle assembly 06X-120 as follows:

1 Remove the security pins 06X-140 from the handle assembly 06X-120.

2 Remove the handle assembly 06X-120 from the aft side wall assembly 06X-010.

3 Remove the special screws 06X-130 and the special washers 06X-150 from the aft side wall assembly 06X-010.

(b) Remove the screws 06X-281, the washers 06X-231 and the support 06X-330 from the aft side wall assembly 06X-010.

(c) Remove the toilet seat cover dispenser 06X-310 from the screws 06X-320.

(d) Remove the screws 06X-320 from the aft side wall assembly 06X-010.

(e) Remove the studs 06X-240 and the washers 06X-230 from the cover oxygen container assy 06X-160.

(f) Remove the screws 06X-180, the nuts 06X-190 and the cover oxygen container assy 06X-160 from the angle 06X-170.

(g) Remove the screws 06X-220, the washers 06X-230 and the angle 06X-170 from the aft side wall assembly 06X-010.

(h) Remove the ground cable from the oxygen container assy 06X-210.

(i) Remove the screws 06X-220, 06X-225, the washers 06X-230 and the oxygen container assy 06X-210 from the angles 06X-200.

(j) Remove the screws 06X-220, the washers 06X-230 and the angles 06X-200 from the aft side wall assembly 06X-010.

(k) Remove the screws 06X-280, the washers 06X-230 and the angle 06X-340 from the aft side wall assembly 06X-010.

(l) Remove the caps 06X-290, the screws 06X-280, 06X-300, the washers 06X-230 and the post assembly 06X-250.

(m) Disassemble the post assembly 06X-250 as follows:

1 Remove the screws 06X-260.

(n) Remove the screws 06X-030 and the fittings 06X-020 from the aft side wall assembly 06X-010.

SUB TASK 25-41-51-010-124-D01
D2549020510600

4. Removal of the Side Wall (06X-1)

NOTE: **See TABLE 3244 for the references for the replacement procedures of permanent installed parts.**

IPL FIG. ITEM	COMPONENT PART NAME	IPL FIG. ITEM	REPLACEMENT PART NAME	SEE REPAIR TASK
06X-001 06X-250	Side Wall Post Assembly	06X-270	Nut	Replacement of the Riveted Parts

Table 3244
Reference list for the replacement of permanent installed parts

(a) Remove and disassemble the handle assembly 06X-120 as follows:

1 Remove the security pins 06X-140 from the handle assembly 06X-120.

2 Remove the handle assembly 06X-120 from the aft side wall assembly 06X-010.

3 Remove the special screws 06X-130 and the special washers 06X-150 from the aft side wall assembly 06X-010.

(b) Remove the screws 06X-281, the washers 06X-231 and the support 06X-330 from the aft side wall assembly 06X-010.

(c) Remove the studs 06X-240 and the washers 06X-230 from the cover oxygen container assy 06X-160.

(d) Remove the screws 06X-180, the nuts 06X-190 and the cover oxygen container assy 06X-160 from the angle 06X-170.

(e) Remove the screws 06X-220, the washers 06X-230 and the angle 06X-170 from the aft side wall assembly 06X-010.

(f) Remove the ground cable from the oxygen container assy 06X-210.

(g) Remove the screws 06X-220, the washers 06X-230 and the oxygen container assy 06X-210 from the angles 06X-200.

(h) Remove the screws 06X-220, the washers 06X-230 and the angles 06X-200 from the aft side wall assembly 06X-010.

(i) Remove the screws 06X-280, the washers 06X-230 and the angle 06X-340 from the aft side wall assembly 06X-010.

(j) Remove the caps 06X-290, the screws 06X-280, 06X-300, the washers 06X-230 and the post assembly 06X-250.

(k) Disassemble the post assembly 06X-250 as follows:

1 Remove the screws 06X-260.

(l) Remove the screws 06X-030 and the fittings 06X-020 from the aft side wall assembly 06X-010.

SUB TASK 25-41-51-010-124-E01
D2549010608600 D2549020800000 D2549020800400 D2549020803400

5. Removal of the Side Wall (06X-1)

NOTE: **See TABLE 3245 for the references for the replacement procedures of permanent installed parts.**

IPL FIG. ITEM	COMPONENT PART NAME	IPL FIG. ITEM	REPLACEMENT PART NAME	SEE REPAIR TASK
06X-001 06X-250	Side Wall Post Assembly	06X-270	Nut	Replacement of the Riveted Parts

Table 3245
Reference list for the replacement of permanent installed parts

(a) Remove and disassemble the handle assemblies 06X-350 as follows:

1 Remove the security pins 06X-370 from the handle assemblies 06X-350.

2 Remove the handle assemblies 06X-350 from the aft side wall assembly 06X-010.

3 Remove the special screws 06X-360 and the special washers 06X-380 from the aft side wall assembly 06X-010.

(b) Remove the toilet seat cover dispenser 06X-310 from the screws 06X-320.

(c) Remove the screws 06X-320 from the aft side wall assembly 06X-010.

(d) Remove the studs 06X-240 and the washers 06X-230 from the cover oxygen container assy 06X-160.

(e) Remove the screws 06X-180, the nuts 06X-190 and the cover oxygen container assy 06X-160 from the angle 06X-170.

(f) Remove the screws 06X-220, the washers 06X-230 and the angle 06X-170 from the aft side wall assembly 06X-010.

(g) Remove the ground cable from the oxygen container assy 06X-210.

(h) Remove the screws 06X-220, the washers 06X-230 and the oxygen container assy 06X-210 from the angles 06X-200.

(i) Remove the screws 06X-220, the washers 06X-230 and the angles 06X-200 from the aft side wall assembly 06X-010.

(j) Remove the screws 06X-280, the washers 06X-230 and the angle 06X-340 from the aft side wall assembly 06X-010.

(k) Remove the caps 06X-290, the screws 06X-280, 06X-300, the washers 06X-230 and the post assembly 06X-250.

(l) Disassemble the post assembly 06X-250 as follows:

1 Remove the screws 06X-260.

(m) Remove the screws 06X-030 and the fittings 06X-020 from the aft side wall assembly 06X-010.

(n) If necessary, remove the kick strip 06X-510 from the aft side wall assembly 06X-010.

SUB TASK 25-41-51-010-124-G01
D2549020803200 D2549030400000 R225401693-000

6. Removal of the Side Wall (06X-1)

NOTE: **See TABLE 3246 for the references for the replacement procedures of permanent installed parts.**

IPL FIG. ITEM	COMPONENT PART NAME	IPL FIG. ITEM	REPLACEMENT PART NAME	SEE REPAIR TASK
06X-001 06X-250	Side Wall Post Assembly	06X-270	Nut	Replacement of the Riveted Parts

Table 3246
Reference list for the replacement of permanent installed parts

(a) Remove and disassemble the handle assemblies 06X-350 as follows:

1 Remove the security pins 06X-370 from the handle assemblies 06X-350.

2 Remove the handle assemblies 06X-350 from the aft side wall assembly 06X-010.

3 Remove the special screws 06X-360 and the special washers 06X-380 from the aft side wall assembly 06X-010.

(b) Remove the toilet seat cover dispenser 06X-310 from the screws 06X-320.

(c) Remove the screws 06X-320 from the aft side wall assembly 06X-010.

(d) Remove the studs 06X-240 and the washers 06X-230 from the cover oxygen container assy 06X-160.

(e) Remove the screws 06X-180, the nuts 06X-190 and the cover oxygen container assy 06X-160 from the angle 06X-170.

(f) Remove the screws 06X-220, the washers 06X-230 and the angle 06X-170 from the aft side wall assembly 06X-010.

(g) Remove the ground cable from the oxygen container assy 06X-210.

(h) Remove the screws 06X-220, 06X-225, the washers 06X-230 and the oxygen container assy 06X-210 from the angles 06X-200.

(i) Remove the screws 06X-220, the washers 06X-230 and the angles 06X-200 from the aft side wall assembly 06X-010.

(j) Remove the screws 06X-280, the washers 06X-230 and the angle 06X-340 from the aft side wall assembly 06X-010.

(k) Remove the caps 06X-290, the screws 06X-280, 06X-300, the washers 06X-230 and the post assembly 06X-250.

(l) Disassemble the post assembly 06X-250 as follows:

1 Remove the screws 06X-260.

(m) Remove the screws 06X-030 and the fittings 06X-020 from the aft side wall assembly 06X-010.

SUB TASK 25-41-51-010-124-H01
D2549030610000 R225401199-004

7. Removal of the Side Wall (06X-1)

NOTE: **See TABLE 3247 for the references for the replacement procedures of permanent installed parts.**

IPL FIG. ITEM	COMPONENT PART NAME	IPL FIG. ITEM	REPLACEMENT PART NAME	SEE REPAIR TASK
06X-001 06X-250	Side Wall Post Assembly	06X-270	Nut	Replacement of the Riveted Parts

Table 3247
Reference list for the replacement of permanent installed parts

(a) Remove and disassemble the handle assemblies 06X-350 as follows:

1 Remove the security pins 06X-370 from the handle assemblies 06X-350.

2 Remove the handle assemblies 06X-350 from the aft side wall assembly 06X-010.

3 Remove the special screws 06X-360 and the special washers 06X-380 from the aft side wall assembly 06X-010.

(b) Remove the studs 06X-240 and the washers 06X-230 from the cover oxygen container assy 06X-160.

(c) Remove the screws 06X-180, the nuts 06X-190 and the cover oxygen container assy 06X-160 from the angle 06X-170.

(d) Remove the screws 06X-220, the washers 06X-230 and the angle 06X-170 from the aft side wall assembly 06X-010.

(e) Remove the ground cable from the oxygen container assy 06X-210.

(f) Remove the screws 06X-220, the washers 06X-230 and the oxygen container assy 06X-210 from the angles 06X-200.

(g) Remove the screws 06X-220, the washers 06X-230 and the angles 06X-200 from the aft side wall assembly 06X-010.

(h) Remove the screws 06X-280, the washers 06X-230 and the angle 06X-340 from the aft side wall assembly 06X-010.

(i) Remove the caps 06X-290, the screws 06X-280, 06X-300, the washers 06X-230 and the post assembly 06X-250.

(j) Disassemble the post assembly 06X-250 as follows:

1 Remove the screws 06X-260.

(k) Remove the screws 06X-030 and the fittings 06X-020 from the aft side wall assembly 06X-010.

TASK 25-41-51-000-804-Z01

D2547160900200 D2547160900400 D2547161903000 D2549010400000 D2549010400200
D2549010400400 D2549010400600 D2549010400800 D2549010401000 D2549010401400
D2549010401600 D2549010401800 D2549010402000 D2549010402200 D2549010402400
D2549010402600 D2549010402800 D2549010403000 D2549010403200 D2549010403400
D2549010403600 D2549010403800 D2549010404000 D2549010404200 D2549010404400
D2549010404600 D2549010404800 D2549010405000 D2549010405200 D2549010405400
D2549010405600 D2549010405800 D2549010406000 D2549010406200 D2549010406400
D2549010406800 D2549010407000 D2549010504200 D2549010504400 D2549010507400
D2549010511200 D2549010512600 D2549010514200 D2549010601800 D2549010609200
D2549010610600 D2549010610800 D2549010611000 D2549010611200 D2549010611400
D2549010611600 D2549010612000 D2549010612200 D2549010612400 D2549010612600
D2549010613000 D2549010613200 D2549010613400 D2549010613600 D2549010613800
D2549010614200 D2549010614400 D2549010614600 D2549010614800 D2549020300000
D2549020300400 D2549020300600 D2549020300800 D2549020301000 D2549020301600
D2549020301800 D2549020302000 D2549020302800 D2549020400000 D2549020400200
D2549020400400 D2549020400600 D2549020400800 D2549020401000 D2549020401200
D2549020401400 D2549020401600 D2549020402000 D2549020402200 D2549020402400
D2549020402600 D2549020403000 D2549020403200 D2549020403400 D2549020403600
D2549020403800 D2549020404000 D2549020404200 D2549020404400 D2549020404600
D2549020405200 D2549020405400 D2549020405600 D2549020405800 D2549020406000
D2549020406200 D2549020406400 D2549020406600 D2549020406800 D2549020407000
D2549020407200 D2549020407400 D2549020407600 D2549020407800 D2549020408000
D2549020408200 D2549020408600 D2549020408800 D2549020409000 D2549020409200
D2549020409400 D2549020409600 D2549020409800 D2549020410200 D2549020410400
D2549020410600 D2549020410800 D2549020411000 D2549020411200 D2549020411400
D2549020411600 D2549020411800 D2549020412000 D2549020412200 D2549020412400
D2549020412600 D2549020412800 D2549020413000 D2549020413200 D2549020413400
D2549020413600 D2549020413800 D2549020414000 D2549020414200 D2549020414600
D2549020414800 D2549020505400 D2549020505800 D2549020513200 D2549020513800
D2549020603200 D2549020608800 D2549020706400 D2549020713000 D2549020714000
D2549020800200 D2549020801200 D2549020801400 D2549020801800 D2549020802400
D2549020802600 D2549020804000 D2549020804200 D2549020804400 D2549020804800
D2549020805200 D2549020805400 D2549020805600 D2549020805800 D2549020806000
D2549020806200 D2549020806400 D2549020806600 D2549020806800 D2549020807000
D2549020807200 D2549020807400 D2549020807600 D2549020807800 D2549020808400
D2549020808600 D2549020808800 D2549020809000 D2549020809400 D2549020809600
D2549020810000 D2549020810200 D2549020810400 D2549020810600 D2549020810800
D2549020811200 D2549020811400 D2549020811600 D2549020811800 D2549020812000
D2549020812200 D2549020812400 D2549020812600 D2549020813000 D2549020813200
D2549020813400 D2549020813600 D2549020813800 D2549020814000 D2549020814400
D2549020814600 D2549020814800 D2549030400600 D2549030401000 D2549030401200
D2549030401400 D2549030401800 D2549030402000 D2549030402200 D2549030402400
D2549030402600 D2549030402800 D2549030403400 D2549030403600 D2549030404000
D2549030404200 D2549030404400 D2549030404600 D2549030404800 D2549030405000
D2549030405200 D2549030405400 D2549030405600 D2549030405800 D2549030406000
D2549030406400 D2549030406600 D2549030406800 D2549030407000 D2549030407200

D2549030407600 D2549030407800 D2549030408000 D2549030408200 D2549030408400
D2549030408600 D2549030409000 D2549030409200 D2549030409400 D2549030409600
D2549030409800 D2549030410000 D2549030410200 D2549030410400 D2549030410600
D2549030410800 D2549030411200 D2549030411400 D2549030411600 D2549030411800
D2549030412000 D2549030412200 D2549030412400 D2549030412600 D2549030412800
D2549030413000 D2549030413200 D2549030413400 D2549030413600 D2549030414000
D2549030414200 D2549030414400 D2549030414600 D2549030414800 D2549030502200
D2549030509000 D2549030603200 D2549030608400 D2549030612000 D2549030612200
D2549030612400 D2549030612600 D2549030613600 D2549030614000 D2549030700000
D2549030700200 D2549030700400 D2549030700600 D2549030700800 D2549030701000
D2549030701200 D2549030701400 D2549030701600 D2549030701800 D2549030702000
D2549030702200 D2549030702400 D2549030702600 D2549030702800 D2549030703000
D2549030703200 D2549030703400 D2549030703600 D2549030703800 D2549030704000
D2549030704200 D2549030704400 D2549030704600 D2549030704800 D2549030705200
D2549030705600 D2549040500200 D2549040500400 D2549040500600 D2549040500800
D2549040501000 D2549040501200 D2549040501400 D2549040501600 D2549040501800
D2549040502000 R225401107-002 R225401134-014 R225401134-030 R225401134-032
R225401134-034 R225401134-036 R225401134-038 R225401136-004 R225401136-006
R225401136-008 R225401136-012 R225401136-014 R225401136-018 R225401136-024
R225401145-010 R225401152-008 R225401152-010 R225401168-008 R225401168-010
R225401168-012 R225401168-024 R225401168-026 R225401183-004 R225401183-006
R225401192-002 R225401196-008 R225401196-010 R225401196-012 R225401196-014
R225401196-016 R225401196-018 R225401196-020 R225401196-022 R225401196-024
R225401196-040 R225401196-042 R225401196-044 R225401196-054 R225401196-056
R225401196-058 R225401196-060 R225401196-062 R225401196-064 R225401196-066
R225401196-068 R225401196-070 R225401199-002 R225401199-006 R225401199-012
R225401602-000 R225401609-000 R225401611-000 R225401611-006 R225401611-010
R225401611-012 R225401611-014 R225401611-016 R225401611-018 R225401611-020
R225401622-000 R225401622-002 R225401624-000 R225401627-000 R225401627-002
R225401627-004 R225401639-000 R225401639-002 R225401643-000 R225401643-002
R225401643-004 R225401643-006 R225401643-008 R225401646-000 R225401646-002
R225401647-000 R225401648-000 R225401648-002 R225401648-004 R225401648-006
R225401648-008 R225401649-000 R225401656-000 R225401656-002 R225401658-000
R225401662-000 R225401662-002 R225401671-000 R225401671-002 R225401673-000
R225401673-002 R225401673-004 R225401673-006 R225401675-000 R225401676-000
R225401683-000 R225401685-000 R225401685-002 R225401688-000 R225401689-004
R225401689-006 R225401691-000 R225401691-002 R225401697-000 R225401697-002
R225401803-000 R225401803-002 R225401808-000 R225401811-000 R225401814-000

43. Removal of the Side Wall

A. General

A complete disassembly of the component is not necessary and not recommended.

Do not disassemble the component more than it is necessary for:

- Cleaning
- Visual Inspection
- Replacement of defective parts.

B. Job Set-up Information

(1) Not applicable

C. Procedure

WARNING: **BE CAREFUL WHEN YOU USE SOLVENTS/CLEANING AGENTS, SEALANTS AND OTHER MATERIALS. OBEY THE MATERIAL MANUFACTURER'S INSTRUCTIONS AND THE LOCAL REGULATIONS. MAKE SURE THAT THERE IS A GOOD FLOW OF AIR THROUGH THE WORK AREA. DO NOT BREATHE THE FUMES. DO NOT SMOKE. DO NOT USE THESE MATERIALS NEAR A FLAME, SPARKS OR SOURCES OF HEAT. USE PROTECTIVE CLOTHING, GOGGLES AND GLOVES. IF YOU GET ONE OF THESE MATERIALS ON YOUR SKIN OR IN YOUR EYES, FLUSH IT AWAY WITH A FLOW OF CLEAN WATER. IF YOU GET ONE OF THESE MATERIALS IN YOUR MOUTH, GET IMMEDIATE MEDICAL AID. IN GENERAL, THESE MATERIALS ARE POISONOUS, FLAMMABLE AND SKIN IRRITANTS.**

WARNING: **KEEP ALL HYDROCARBONS (FUELS, LUBRICANTS, ETC.) AWAY FROM ALL SOURCES OF OXYGEN. OXYGEN BECOMES EXPLOSIVE WHEN IT TOUCHES HYDROCARBONS.**

WARNING: **TO PREVENT CONTAMINATION OF THE OXYGEN SYSTEM, MAKE SURE THAT YOUR HANDS AND ALL THE TOOLS ARE CLEAN.**

CAUTION: **PUT DRY, CLEAN, METAL OR PLASTIC PLUGS ON ALL PIPES OR UNITS REMOVED TEMPORARILY. PUT EACH PIPE OR UNIT IN A SEALED VINYL BAG. UNWANTED MATERIALS IN THE OXYGEN SYSTEM CAN DAMAGE THE SYSTEM.**

CAUTION: **DO ALL THE WORK ON A CLEAN, SOFT SURFACE TO PREVENT DAMAGE TO THE COMPONENTS.**

SUB TASK 25-41-51-010-125-A01
D2549010611600 D2549010612000

1. Removal of the Side Wall (06Y-1)

NOTE: **See TABLE 3248 for the references for the replacement procedures of permanent installed parts.**

IPL FIG. ITEM	COMPONENT PART NAME	IPL FIG. ITEM	REPLACEMENT PART NAME	SEE REPAIR TASK
06Y-001 06Y-210	Side Wall Post Assembly	06Y-230	Nut	Replacement of the Riveted Parts

Table 3248
Reference list for the replacement of permanent installed parts

(a) Remove and disassemble the handle assemblies 06Y-330 as follows:

1 Remove the security pins 06Y-350 from the handle assemblies 06Y-330.

2 Remove the handle assemblies 06Y-330 from the aft side wall assembly 06Y-010.

3 Remove the special screws 06Y-340 and the special washers 06Y-360 from the aft side wall assembly 06Y-010.

(b) Remove the toilet seat cover dispenser 06Y-370 from the screws 06Y-390.

(c) Remove the screws 06Y-390 and the washers 06Y-400 from the aft side wall assembly 06Y-010.

(d) Remove the studs 06Y-200 and the washers 06Y-190 from the cover oxygen container assy 06Y-120.

(e) Remove the screws 06Y-140, the nuts 06Y-150 and the cover oxygen container assy 06Y-120 from the angle 06Y-130.

(f) Remove the screws 06Y-180, the washers 06Y-190 and the angle 06Y-130 from the aft side wall assembly 06Y-010.

(g) Remove the ground cable from the oxygen container assy 06Y-170.

(h) Remove the screws 06Y-180, the washers 06Y-190 and the oxygen container assy 06Y-170 from the angles 06Y-160.

(i) Remove the screws 06Y-180, the washers 06Y-190 and the angles 06Y-160 from the aft side wall assembly 06Y-010.

(j) Remove the screws 06Y-240, the washers 06Y-190 and the angle 06Y-320 from the aft side wall assembly 06Y-010.

(k) Remove the caps 06Y-250, the screws 06Y-240, 06Y-260, the washers 06Y-190 and the post assembly 06Y-210.

(l) Disassemble the post assembly 06Y-210 as follows:

1 Remove the screws 06Y-220.

(m) Remove the screws 06Y-030 and the fittings 06Y-020 from the aft side wall assembly 06Y-010.

SUB TASK 25-41-51-010-125-B01
D2549030402000 D2549030402600 D2549030403400 D2549030404600 D2549030405200 R225401134-030 R225401134-032 R225401134-034 R225401134-036

2. Removal of the Side Wall (06Y-1)

NOTE: **See TABLE 3249 for the references for the replacement procedures of permanent installed parts.**

IPL FIG. ITEM	COMPONENT PART NAME	IPL FIG. ITEM	REPLACEMENT PART NAME	SEE REPAIR TASK
06Y-001 06Y-210	Side Wall Post Assembly	06Y-230	Nut	Replacement of the Riveted Parts

Table 3249
Reference list for the replacement of permanent installed parts

(a) Remove and disassemble the handle assembly 06Y-270 as follows:

1 Remove the security pins 06Y-290 from the handle assembly 06Y-270.

2 Remove the handle assembly 06Y-270 from the aft side wall assembly 06Y-010.

3 Remove the special screws 06Y-280 and the special washers 06Y-300 from the aft side wall assembly 06Y-010.

(b) Remove the screws 06Y-241, the washers 06Y-191 and the support 06Y-310 from the aft side wall assembly 06Y-010.

(c) Remove the toilet seat cover dispenser 06Y-370 from the screws 06Y-380.

(d) Remove the screws 06Y-380 from the aft side wall assembly 06Y-010.

(e) Remove the studs 06Y-200 and the washers 06Y-190 from the cover oxygen container assy 06Y-120.

(f) Remove the screws 06Y-140, the nuts 06Y-150 and the cover oxygen container assy 06Y-120 from the angle 06Y-130.

(g) Remove the screws 06Y-180, the washers 06Y-190 and the angle 06Y-130 from the aft side wall assembly 06Y-010.

(h) Remove the ground cable from the oxygen container assy 06Y-170.

(i) Remove the screws 06Y-180, 06Y-182, the washers 06Y-190 and the oxygen container assy 06Y-170 from the angles 06Y-160.

(j) Remove the screws 06Y-180, the washers 06Y-190 and the angles 06Y-160 from the aft side wall assembly 06Y-010.

(k) Remove the screws 06Y-240, the washers 06Y-190 and the angle 06Y-320 from the aft side wall assembly 06Y-010.

(l) Remove the caps 06Y-250, the screws 06Y-240, 06Y-260, the washers 06Y-190 and the post assembly 06Y-210.

(m) Disassemble the post assembly 06Y-210 as follows:

1 Remove the screws 06Y-220.

(n) Remove the screws 06Y-030 and the fittings 06Y-020 from the aft side wall assembly 06Y-010.

SUB TASK 25-41-51-010-125-C01
D2549010609200

3. Removal of the Side Wall (06Y-1)

NOTE: **See TABLE 3250 for the references for the replacement procedures of permanent installed parts.**

IPL FIG. ITEM	COMPONENT PART NAME	IPL FIG. ITEM	REPLACEMENT PART NAME	SEE REPAIR TASK
06Y-001 06Y-210	Side Wall Post Assembly	06Y-230	Nut	Replacement of the Riveted Parts

Table 3250
Reference list for the replacement of permanent installed parts

(a) Remove and disassemble the handle assembly 06Y-270 as follows:

1 Remove the security pins 06Y-290 from the handle assembly 06Y-270.

2 Remove the handle assembly 06Y-270 from the aft side wall assembly 06Y-010.

3 Remove the special screws 06Y-280 and the special washers 06Y-300 from the aft side wall assembly 06Y-010.

(b) Remove the screws 06Y-241, the washers 06Y-191 and the support 06Y-310 from the aft side wall assembly 06Y-010.

(c) Remove the toilet seat cover dispenser 06Y-370 from the screws 06Y-380.

(d) Remove the screws 06Y-380 from the aft side wall assembly 06Y-010.

(e) Remove the studs 06Y-200 and the washers 06Y-190 from the cover oxygen container assy 06Y-120.

(f) Remove the screws 06Y-140, the nuts 06Y-150 and the cover oxygen container assy 06Y-120 from the angle 06Y-130.

(g) Remove the screws 06Y-180, the washers 06Y-190 and the angle 06Y-130 from the aft side wall assembly 06Y-010.

(h) Remove the ground cable from the oxygen container assy 06Y-170.

(i) Remove the screws 06Y-180, the washers 06Y-190 and the oxygen container assy 06Y-170 from the angles 06Y-160.

(j) Remove the screws 06Y-180, the washers 06Y-190 and the angles 06Y-160 from the aft side wall assembly 06Y-010.

(k) Remove the screws 06Y-240, the washers 06Y-190 and the angle 06Y-320 from the aft side wall assembly 06Y-010.

(l) Remove the caps 06Y-250, the screws 06Y-240, 06Y-260, the washers 06Y-190 and the post assembly 06Y-210.

(m) Disassemble the post assembly 06Y-210 as follows:

1 Remove the screws 06Y-220.

(n) Remove the screws 06Y-030 and the fittings 06Y-020 from the aft side wall assembly 06Y-010.

SUB TASK 25-41-51-010-125-D01
D2549010614400 D2549020801200 D2549020805400 D2549030404000 D2549030603200 D2549030613600

4. Removal of the Side Wall (06Y-1)

NOTE: **See TABLE 3251 for the references for the replacement procedures of permanent installed parts.**

IPL FIG. ITEM	COMPONENT PART NAME	IPL FIG. ITEM	REPLACEMENT PART NAME	SEE REPAIR TASK
06Y-001 06Y-210	Side Wall Post Assembly	06Y-230	Nut	Replacement of the Riveted Parts

Table 3251
Reference list for the replacement of permanent installed parts

(a) Remove and disassemble the handle assemblies 06Y-330 as follows:

1 Remove the security pins 06Y-350 from the handle assemblies 06Y-330.

2 Remove the handle assemblies 06Y-330 from the aft side wall assembly 06Y-010.

3 Remove the special screws 06Y-340 and the special washers 06Y-360 from the aft side wall assembly 06Y-010.

(b) Remove the toilet seat cover dispenser 06Y-370 from the screws 06Y-380.

(c) Remove the screws 06Y-380 from the aft side wall assembly 06Y-010.

(d) Remove the studs 06Y-200 and the washers 06Y-190 from the cover oxygen container assy 06Y-120.

(e) Remove the screws 06Y-140, the nuts 06Y-150 and the cover oxygen container assy 06Y-120 from the angle 06Y-130.

(f) Remove the screws 06Y-180, the washers 06Y-190 and the angle 06Y-130 from the aft side wall assembly 06Y-010.

(g) Remove the ground cable from the oxygen container assy 06Y-170.

(h) Remove the screws 06Y-180, the washers 06Y-190 and the oxygen container assy 06Y-170 from the angles 06Y-160.

(i) Remove the screws 06Y-180, the washers 06Y-190 and the angles 06Y-160 from the aft side wall assembly 06Y-010.

(j) Remove the screws 06Y-240, the washers 06Y-190 and the angle 06Y-320 from the aft side wall assembly 06Y-010.

(k) Remove the caps 06Y-250, the screws 06Y-240, 06Y-260, the washers 06Y-190 and the post assembly 06Y-210.

(l) Disassemble the post assembly 06Y-210 as follows:

1 Remove the screws 06Y-220.

(m) Remove the screws 06Y-030 and the fittings 06Y-020 from the aft side wall assembly 06Y-010.

SUB TASK 25-41-51-010-125-E01
D2549030401200 D2549030402800 D2549030612400

5. Removal of the Side Wall (06Y-1)

NOTE: **See TABLE 3252 for the references for the replacement procedures of permanent installed parts.**

IPL FIG. ITEM	COMPONENT PART NAME	IPL FIG. ITEM	REPLACEMENT PART NAME	SEE REPAIR TASK
06Y-001 06Y-210	Side Wall Post Assembly	06Y-230	Nut	Replacement of the Riveted Parts

Table 3252
Reference list for the replacement of permanent installed parts

(a) Remove and disassemble the handle assembly 06Y-270 as follows:

1 Remove the security pins 06Y-290 from the handle assembly 06Y-270.

2 Remove the handle assembly 06Y-270 from the aft side wall assembly 06Y-010.

3 Remove the special screws 06Y-280 and the special washers 06Y-300 from the aft side wall assembly 06Y-010.

(b) Remove the screws 06Y-241, the washers 06Y-191 and the support 06Y-310 from the aft side wall assembly 06Y-010.

(c) Remove the studs 06Y-200 and the washers 06Y-190 from the cover oxygen container assy 06Y-120.

(d) Remove the screws 06Y-140, the nuts 06Y-150 and the cover oxygen container assy 06Y-120 from the angle 06Y-130.

(e) Remove the screws 06Y-180, the washers 06Y-190 and the angle 06Y-130 from the aft side wall assembly 06Y-010.

(f) Remove the ground cable from the oxygen container assy 06Y-170.

(g) Remove the screws 06Y-180, the washers 06Y-190 and the oxygen container assy 06Y-170 from the angles 06Y-160.

(h) Remove the screws 06Y-180, the washers 06Y-190 and the angles 06Y-160 from the aft side wall assembly 06Y-010.

(i) Remove the screws 06Y-240, the washers 06Y-190 and the angle 06Y-320 from the aft side wall assembly 06Y-010.

(j) Remove the caps 06Y-250, the screws 06Y-240, 06Y-260, the washers 06Y-190 and the post assembly 06Y-210.

(k) Disassemble the post assembly 06Y-210 as follows:

1 Remove the screws 06Y-220.

(l) Remove the screws 06Y-030 and the fittings 06Y-020 from the aft side wall assembly 06Y-010.

SUB TASK 25-41-51-010-125-F01
D2549020807400 D2549020809400 D2549030402200 D2549030405400 D2549030407200 D2549030612600 R225401168-008 R225401168-010 R225401168-012 R225401168-024 R225401168-026

6. Removal of the Side Wall (06Y-1)

NOTE: **See TABLE 3253 for the references for the replacement procedures of permanent installed parts.**

IPL FIG. ITEM	COMPONENT PART NAME	IPL FIG. ITEM	REPLACEMENT PART NAME	SEE REPAIR TASK
06Y-001 06Y-210	Side Wall Post Assembly	06Y-230	Nut	Replacement of the Riveted Parts

Table 3253
Reference list for the replacement of permanent installed parts

(a) Remove and disassemble the handle assemblies 06Y-330 as follows:

1 Remove the security pins 06Y-350 from the handle assemblies 06Y-330.

2 Remove the handle assemblies 06Y-330 from the aft side wall assembly 06Y-010.

3 Remove the special screws 06Y-340 and the special washers 06Y-360 from the aft side wall assembly 06Y-010.

(b) Remove the studs 06Y-200 and the washers 06Y-190 from the cover oxygen container assy 06Y-120.

(c) Remove the screws 06Y-140, the nuts 06Y-150 and the cover oxygen container assy 06Y-120 from the angle 06Y-130.

(d) Remove the screws 06Y-180, the washers 06Y-190 and the angle 06Y-130 from the aft side wall assembly 06Y-010.

(e) Remove the ground cable from the oxygen container assy 06Y-170.

(f) Remove the screws 06Y-180, 06Y-182, the washers 06Y-190 and the oxygen container assy 06Y-170 from the angles 06Y-160.

(g) Remove the screws 06Y-180, the washers 06Y-190 and the angles 06Y-160 from the aft side wall assembly 06Y-010.

(h) Remove the screws 06Y-240, the washers 06Y-190 and the angle 06Y-320 from the aft side wall assembly 06Y-010.

(i) Remove the caps 06Y-250, the screws 06Y-240, 06Y-260, the washers 06Y-190 and the post assembly 06Y-210.

(j) Disassemble the post assembly 06Y-210 as follows:

1 Remove the screws 06Y-220.

(k) Remove the screws 06Y-030 and the fittings 06Y-020 from the aft side wall assembly 06Y-010.

SUB TASK 25-41-51-010-125-G01
D2549020800200 D2549030612000 D2549030612200 R225401199-006 R225401611-010

7. Removal of the Side Wall (06Y-1)

NOTE: **See TABLE 3254 for the references for the replacement procedures of permanent installed parts.**

IPL FIG. ITEM	COMPONENT PART NAME	IPL FIG. ITEM	REPLACEMENT PART NAME	SEE REPAIR TASK
06Y-001 06Y-210	Side Wall Post Assembly	06Y-230	Nut	Replacement of the Riveted Parts

Table 3254
Reference list for the replacement of permanent installed parts

(a) Remove and disassemble the handle assemblies 06Y-330 as follows:

1 Remove the security pins 06Y-350 from the handle assemblies 06Y-330.

2 Remove the handle assemblies 06Y-330 from the aft side wall assembly 06Y-010.

3 Remove the special screws 06Y-340 and the special washers 06Y-360 from the aft side wall assembly 06Y-010.

(b) Remove the studs 06Y-200 and the washers 06Y-190 from the cover oxygen container assy 06Y-120.

(c) Remove the screws 06Y-140, the nuts 06Y-150 and the cover oxygen container assy 06Y-120 from the angle 06Y-130.

(d) Remove the screws 06Y-180, the washers 06Y-190 and the angle 06Y-130 from the aft side wall assembly 06Y-010.

(e) Remove the ground cable from the oxygen container assy 06Y-170.

(f) Remove the screws 06Y-180, 06Y-182, the washers 06Y-190 and the oxygen container assy 06Y-170 from the angles 06Y-160.

(g) Remove the screws 06Y-180, the washers 06Y-190 and the angles 06Y-160 from the aft side wall assembly 06Y-010.

(h) Remove the screws 06Y-240, the washers 06Y-190 and the angle 06Y-320 from the aft side wall assembly 06Y-010.

(i) Remove the caps 06Y-250, the screws 06Y-240, 06Y-260, the washers 06Y-190 and the post assembly 06Y-210.

(j) Disassemble the post assembly 06Y-210 as follows:

1 Remove the screws 06Y-220.

(k) Remove the screws 06Y-030 and the fittings 06Y-020 from the aft side wall assembly 06Y-010.

SUB TASK 25-41-51-010-125-H01

D2547160900200 D2547160900400 D2547161903000 D2549010400000
D2549010400200 D2549010400400 D2549010400600 D2549010400800
D2549010401000 D2549010401400 D2549010401600 D2549010401800
D2549010402000 D2549010402200 D2549010402400 D2549010402600
D2549010402800 D2549010403000 D2549010403200 D2549010403400
D2549010403600 D2549010403800 D2549010404000 D2549010404200
D2549010404400 D2549010404600 D2549010404800 D2549010405000

D2549010405200 D2549010405400 D2549010405600 D2549010405800
D2549010406000 D2549010406200 D2549010406400 D2549010406800
D2549010407000 D2549010504200 D2549010504400 D2549010507400
D2549010511200 D2549010512600 D2549010514200 D2549010601800
D2549010610600 D2549010610800 D2549010611000 D2549010611200
D2549010611400 D2549010612200 D2549010612400 D2549010612600
D2549010613000 D2549010613200 D2549010613400 D2549010613600
D2549010613800 D2549010614200 D2549010614600 D2549010614800
D2549020300000 D2549020300400 D2549020300600 D2549020300800
D2549020301000 D2549020301600 D2549020301800 D2549020302000
D2549020302800 D2549020400000 D2549020400200 D2549020400400
D2549020400600 D2549020400800 D2549020401000 D2549020401200
D2549020401400 D2549020401600 D2549020402000 D2549020402200
D2549020402400 D2549020402600 D2549020403000 D2549020403200
D2549020403400 D2549020403600 D2549020403800 D2549020404000
D2549020404200 D2549020404400 D2549020404600 D2549020405200
D2549020405400 D2549020405600 D2549020405800 D2549020406000
D2549020406200 D2549020406400 D2549020406600 D2549020406800
D2549020407000 D2549020407200 D2549020407400 D2549020407600
D2549020407800 D2549020408000 D2549020408200 D2549020408600
D2549020408800 D2549020409000 D2549020409200 D2549020409400
D2549020409600 D2549020409800 D2549020410200 D2549020410400
D2549020410600 D2549020410800 D2549020411000 D2549020411200
D2549020411400 D2549020411600 D2549020411800 D2549020412000
D2549020412200 D2549020412400 D2549020412600 D2549020412800
D2549020413000 D2549020413200 D2549020413400 D2549020413600
D2549020413800 D2549020414000 D2549020414200 D2549020414600
D2549020414800 D2549020505400 D2549020505800 D2549020513200
D2549020513800 D2549020603200 D2549020608800 D2549020706400
D2549020713000 D2549020714000 D2549020801400 D2549020801800
D2549020802400 D2549020802600 D2549020804000 D2549020804200
D2549020804400 D2549020804800 D2549020805200 D2549020805600
D2549020805800 D2549020806000 D2549020806200 D2549020806400
D2549020806600 D2549020806800 D2549020807000 D2549020807200
D2549020807600 D2549020807800 D2549020808400 D2549020808600
D2549020808800 D2549020809000 D2549020809600 D2549020810000
D2549020810200 D2549020810400 D2549020810600 D2549020810800
D2549020811200 D2549020811400 D2549020811600 D2549020811800
D2549020812000 D2549020812200 D2549020812400 D2549020812600
D2549020813000 D2549020813200 D2549020813400 D2549020813600
D2549020813800 D2549020814000 D2549020814400 D2549020814600
D2549020814800 D2549030400600 D2549030401000 D2549030401400
D2549030401800 D2549030402400 D2549030403600 D2549030404200
D2549030404400 D2549030404800 D2549030405000 D2549030405600
D2549030405800 D2549030406000 D2549030406400 D2549030406600
D2549030406800 D2549030407000 D2549030407600 D2549030407800
D2549030408000 D2549030408200 D2549030408400 D2549030408600

D2549030409000 D2549030409200 D2549030409400 D2549030409600
D2549030409800 D2549030410000 D2549030410200 D2549030410400
D2549030410600 D2549030410800 D2549030411200 D2549030411400
D2549030411600 D2549030411800 D2549030412000 D2549030412200
D2549030412400 D2549030412600 D2549030412800 D2549030413000
D2549030413200 D2549030413400 D2549030413600 D2549030414000
D2549030414200 D2549030414400 D2549030414600 D2549030414800
D2549030502200 D2549030509000 D2549030608400 D2549030614000
D2549030700000 D2549030700200 D2549030700400 D2549030700600
D2549030700800 D2549030701000 D2549030701200 D2549030701400
D2549030701600 D2549030701800 D2549030702000 D2549030702200
D2549030702400 D2549030702600 D2549030702800 D2549030703000
D2549030703200 D2549030703400 D2549030703600 D2549030703800
D2549030704000 D2549030704200 D2549030704400 D2549030704600
D2549030704800 D2549030705200 D2549030705600 D2549040500200
D2549040500400 D2549040500600 D2549040500800 D2549040501000
D2549040501200 D2549040501400 D2549040501600 D2549040501800
D2549040502000 R225401107-002 R225401134-014 R225401134-038 R225401136-004 R225401136-006 R225401136-008 R225401136-012 R225401136-014 R225401136-018 R225401136-024 R225401145-010 R225401152-008 R225401152-010 R225401183-004 R225401183-006 R225401192-002 R225401196-008 R225401196-010 R225401196-012 R225401196-014 R225401196-016 R225401196-018 R225401196-020 R225401196-022 R225401196-024 R225401196-040 R225401196-042 R225401196-044 R225401196-054 R225401196-056 R225401196-058 R225401196-060 R225401196-062 R225401196-064 R225401196-066 R225401196-068 R225401196-070 R225401199-002 R225401199-012 R225401602-000 R225401609-000 R225401611-000 R225401611-006
R225401611-012 R225401611-014 R225401611-016 R225401611-018 R225401611-020
R225401622-000 R225401622-002 R225401624-000 R225401627-000 R225401627-002 R225401627-004 R225401639-000 R225401639-002 R225401643-000
R225401643-002 R225401643-004 R225401643-006 R225401643-008 R225401646-002 R225401646-002 R225401647-000 R225401648-000 R225401648-002
R225401648-004 R225401648-006 R225401648-008 R225401649-000 R225401656-000 R225401656-002 R225401658-000 R225401662-000 R225401662-002
R225401671-000 R225401671-002 R225401673-000 R225401673-002 R225401673-004 R225401673-006 R225401675-000 R225401676-000 R225401683-000
R225401685-000 R225401685-002 R225401688-000 R225401689-004 R225401689-006 R225401691-000 R225401691-002 R225401697-000 R225401697-002
R225401803-000 R225401803-002 R225401808-000 R225401811-000 R225401814-000

8. Removal of the Side Wall

(a) Not applicable.

TASK 25-41-51-000-805-A01
D2549010500400 D2549010500600 D2549010501400 D2549010501600 D2549010501800 D2549010502200 D2549010502400 D2549010502600 D2549010502800 D2549010503200 D2549010503400 D2549010503600 D2549010503800 D2549010504600 D2549010505200 D2549010506000 D2549010506200 D2549010506400 D2549010507000 D2549010507200 D2549010507600 D2549020500000 D2549020500600 D2549020501000 D2549020501400 D2549020502400 D2549020502600 D2549020502800 D2549020503000 D2549020503200 D2549020504200 D2549020504400 D2549020504800 D2549020505000 D2549020505200 D2549020506000 D2549020600800 D2549020602000 R225401115-002 R225401146-000 R225401146-002

44. Removal of the Housing

A. General

A complete disassembly of the component is not necessary and not recommended.

Do not disassemble the component more than it is necessary for:

- Cleaning
- Visual Inspection
- Replacement of defective parts.

B. Job Set-up Information
(1) Consumable Materials

REFERENCE	DESIGNATION
08-010A	Epoxy Resin and Hardener Adhesive
08-026	Adhesive/Sealant one Part, RTV Silicone Rubber

Table 3255
Consumable Materials

C. Procedure

WARNING: **BE CAREFUL WHEN YOU USE SOLVENTS/CLEANING AGENTS, SEALANTS AND OTHER MATERIALS. OBEY THE MATERIAL MANUFACTURER'S INSTRUCTIONS AND THE LOCAL REGULATIONS. MAKE SURE THAT THERE IS A GOOD FLOW OF AIR THROUGH THE WORK AREA. DO NOT BREATHE THE FUMES. DO NOT SMOKE. DO NOT USE THESE MATERIALS NEAR A FLAME, SPARKS OR SOURCES OF HEAT. USE PROTECTIVE CLOTHING, GOGGLES AND GLOVES. IF YOU GET ONE OF THESE MATERIALS ON YOUR SKIN OR IN YOUR EYES, FLUSH IT AWAY WITH A FLOW OF CLEAN WATER. IF YOU GET ONE OF THESE MATERIALS IN YOUR MOUTH, GET IMMEDIATE MEDICAL AID. IN GENERAL, THESE MATERIALS ARE POISONOUS, FLAMMABLE AND SKIN IRRITANTS.**

CAUTION: **DO ALL THE WORK ON A CLEAN, SOFT SURFACE TO PREVENT DAMAGE TO THE COMPONENTS.**

SUB TASK 25-41-51-000-139-A01
D2549010502800 D2549010503400 D2549010506200 D2549010507000

1. Removal of the Housing (07-1)

NOTE: **See TABLE 3256 for the references for the replacement procedure of permanent installed parts.**

More data for bonded parts are given in column SEE REPAIR TASK for the selection of the related repair solution.

IPL FIG. ITEM	COMPONENT PART NAME	IPL FIG. ITEM	REPLACEMENT PART NAME	SEE REPAIR TASK
07-001 07-010	Housing Housing Assembly	07-020	Sliding Strip	Replacement of the Bonded Parts self adhesive
07-001 07-010	Housing Housing Assembly	07-030	Sliding Strip	Replacement of the Bonded Parts self adhesive

Table 3256
Reference list for the replacement of permanent installed parts

07-001 07-010	Housing Housing Assembly	07-040	Scuff Plate	Replacement of the Bonded Parts Material No. 08-010A Epoxy Resin and Hardener Adhesive
07-001	Housing	07-180	Section	Replacement of the Bonded Parts Material No. 08-026 Adhesive/ Sealant one Part, RTV Silicone Rubber
07-001	Housing	07-190	Sealing Section	Replacement of the Bonded Parts Material No. 08-026 Adhesive/ Sealant one Part, RTV Silicone Rubber
07-001	Housing	07-200	Placard	Replacement of the Self-adhesive Placards self adhesive

Table 3256
Reference list for the replacement of permanent installed parts

(b) Remove the screw 07-220, the washer 07-230 and the housing assembly 07-010 from the lavatory structure.

(c) Remove the stud 07-160 from the housing assembly 07-010.

(d) Remove the glass mirror 07-150 from the screws 07-170.

(e) Remove the screws 07-170 from the housing assembly 07-010.

(f) Remove the screws 07-070 and the fittings 07-060.

SUB TASK 25-41-51-000-139-B01

D2549010500400 D2549010500600 D2549010501400 D2549010501600 D2549010501800 D2549010502200 D2549010502400 D2549010502600 D2549010503200 D2549010503600 D2549010503800 D2549010504600 D2549010505200 D2549010506000 D2549010506400 D2549010507200 D2549010507600 D2549020500000 D2549020500600 D2549020501000 D2549020501400 D2549020502400 D2549020502600 D2549020502800 D2549020503000 D2549020503200 D2549020504200 D2549020504400 D2549020504800 D2549020505000 D2549020505200 D2549020506000 D2549020600800 D2549020602000 R225401115-002 R225401146-000 R225401146-002

2. Removal of the Housing (07-1)

NOTE: **See TABLE 3257 for the references for the replacement procedure of permanent installed parts.**

More data for bonded parts are given in column SEE REPAIR TASK. Use the data for the selection of the related repair solution.

IPL FIG. ITEM	COMPONENT PART NAME	IPL FIG. ITEM	REPLACEMENT PART NAME	SEE REPAIR TASK
07-001 07-010	Housing Housing Assembly	07-020	Sliding Strip	Replacement of the Bonded Parts self adhesive
07-001 07-010	Housing Housing Assembly	07-030	Sliding Strip	Replacement of the Bonded Parts self adhesive
07-001 07-010	Housing Housing Assembly	07-040	Scuff Plate	Replacement of the Bonded Parts Material No. 08-010A Epoxy

Table 3257
Reference list for the replacement of permanent installed parts

				Resin and Hardener Adhesive
07-001	Housing	07-180	Section	Replacement of the Bonded Parts Material No. 08-026 Adhesive/ Sealant one Part, RTV Silicone Rubber
07-001	Housing	07-190	Sealing Section	Replacement of the Bonded Parts Material No. 08-026 Adhesive/ Sealant one Part, RTV Silicone Rubber
07-001	Housing	07-200	Placard	Replacement of the Self-adhesive Placards self adhesive
07-001	Housing	07-210	Placard	Replacement of the Self-adhesive Placards self adhesive

Table 3257
Reference list for the replacement of permanent installed parts

(b) Remove the screw 07-220, the washer 07-230 and the housing assembly 07-010 from the lavatory structure.

(c) Remove the stud 07-160 from the housing assembly 07-010.

(d) Remove the glass mirror 07-150 from the screws 07-170.

(e) Remove the screws 07-170 from the housing assembly 07-010.

(f) Remove the screws 07-070 and the fittings 07-060.

TASK 25-41-51-000-805-B01
D2549010501000 D2549010502000 D2549010504200 D2549010505000 D2549010505600 D2549010505800 D2549010507800 D2549010510200 D2549010511200 D2549010512600 D2549010601800 D2549020501600 D2549020503400 D2549020503800 D2549020504000 D2549020505400 D2549020505800 D2549020600000 D2549020600200 D2549020600400 D2549030500200 D2549030500600 D2549030500800 D2549030501400 D2549030501600 D2549030502000 D2549030502200 D2549030502800 D2549030503000 D2549030503200 D2549030509000 R225401107-000 R225401107-002 R225401107-004 R225401128-000 R225401188-004

45. Removal of the Housing

A. General

A complete disassembly of the component is not necessary and not recommended.

Do not disassemble the component more than it is necessary for:

- Cleaning
- Visual Inspection
- Replacement of defective parts.

B. Job Set-up Information
(1) Consumable Materials

REFERENCE	DESIGNATION
08-001	General Purpose Adhesive Honeycomb Filler
08-026	Adhesive/Sealant one Part, RTV Silicone Rubber

Table 3258
Consumable Materials

C. Procedure

WARNING: **BE CAREFUL WHEN YOU USE SOLVENTS/CLEANING AGENTS, SEALANTS AND OTHER MATERIALS. OBEY THE MATERIAL MANUFACTURER'S INSTRUCTIONS AND THE LOCAL REGULATIONS. MAKE SURE THAT THERE IS A GOOD FLOW OF AIR THROUGH THE WORK AREA. DO NOT BREATHE THE FUMES. DO NOT SMOKE. DO NOT USE THESE MATERIALS NEAR A FLAME, SPARKS OR SOURCES OF HEAT. USE PROTECTIVE CLOTHING, GOGGLES AND GLOVES. IF YOU GET ONE OF THESE MATERIALS ON YOUR SKIN OR IN YOUR EYES, FLUSH IT AWAY WITH A FLOW OF CLEAN WATER. IF YOU GET ONE OF THESE MATERIALS IN YOUR MOUTH, GET IMMEDIATE MEDICAL AID. IN GENERAL, THESE MATERIALS ARE POISONOUS, FLAMMABLE AND SKIN IRRITANTS.**

CAUTION: **DO ALL THE WORK ON A CLEAN, SOFT SURFACE TO PREVENT DAMAGE TO THE COMPONENTS.**

SUB TASK 25-41-51-000-140-A01

D2549010501000 D2549010502000 D2549010510200 D2549010511200 D2549010512600 D2549010601800 D2549020501600 D2549020503400 D2549020503800 D2549020505400 D2549020505800 D2549030500200 D2549030501600 D2549030502200 D2549030503200 D2549030509000 R225401107-000 R225401107-002 R225401107-004

1. Removal of the Housing (07A-1)

NOTE: **See TABLE 3259 for the references for the replacement procedure of permanent installed parts.**

More data for bonded parts are given in column SEE REPAIR TASK. Use the data for the selection of the related repair solution.

IPL FIG. ITEM	COMPONENT PART NAME	IPL FIG. ITEM	REPLACEMENT PART NAME	SEE REPAIR TASK
07A-001 07A-010	Housing Housing Assembly	07A-020	Sliding Strip	Replacement of the Bonded Parts self adhesive
07A-001 07A-010	Housing	07A-030	Sliding Strip	Replacement of the Bonded Parts

Table 3259
Reference list for the replacement of permanent installed parts

	Housing Assembly			self adhesive
07A-001 07A-010	Housing Housing Assembly	07A-040	Scuff Plate	Replacement of the Bonded Parts Material No. 08-001 General Purpose Adhesive Honeycomb Filler
07A-001	Housing	07A-180	Section	Replacement of the Bonded Parts Material No. 08-026 Adhesive/ Sealant one Part, RTV Silicone Rubber
07A-001	Housing	07A-190	Sealing Section	Replacement of the Bonded Parts Material No. 08-026 Adhesive/ Sealant one Part, RTV Silicone Rubber
07A-001	Housing	07A-240	Placard	Replacement of the Self-adhesive Placards self adhesive
07A-001	Housing	07A-250	Placard	Replacement of the Self-adhesive Placards self adhesive

Table 3259
Reference list for the replacement of permanent installed parts

(b) Remove the screw 07A-260, the washer 07A-270 and the housing assembly 07A-010 from the lavatory structure.

(c) Remove the stud 07A-160 from the housing assembly 07A-010.

(d) Remove the glass mirror 07A-150 from the screws 07A-170.

(e) Remove the screws 07A-170 from the housing assembly 07A-010.

(f) Remove the screws 07A-057 and the armor plates 07A-053, 07A-055 from the housing assembly 07A-010.

(g) Remove the screws 07A-070 and the fittings 07A-060.

SUB TASK 25-41-51-000-140-B01
D2549010504200 D2549010505000 D2549010505800 D2549020504000 D2549020600000 D2549020600200 D2549020600400 D2549030500600 D2549030500800 D2549030501400 D2549030502000 D2549030502800 D2549030503000 R225401128-000 R225401188-004

2. Removal of the Housing (07A-1)

NOTE: **See TABLE 3260 for the references for the replacement procedure of permanent installed parts.**

More data for bonded parts are given in column SEE REPAIR TASK. Use the data for the selection of the related repair solution.

IPL FIG. ITEM	COMPONENT PART NAME	IPL FIG. ITEM	REPLACEMENT PART NAME	SEE REPAIR TASK
07A-001 07A-010	Housing Housing Assembly	07A-020	Sliding Strip	Replacement of the Bonded Parts self adhesive
07A-001 07A-010	Housing Housing Assembly	07A-030	Sliding Strip	Replacement of the Bonded Parts self adhesive
07A-001 07A-010	Housing	07A-040	Scuff Plate	Replacement of the Bonded Parts

Table 3260
Reference list for the replacement of permanent installed parts

	Housing Assembly			Material No. 08-001 General Purpose Adhesive Honeycomb Filler
07A-001	Housing	07A-180	Section	Replacement of the Bonded Parts Material No. 08-026 Adhesive/ Sealant one Part, RTV Silicone Rubber
07A-001	Housing	07A-190	Sealing Section	Replacement of the Bonded Parts Material No. 08-026 Adhesive/ Sealant one Part, RTV Silicone Rubber
07A-001	Housing	07A-240	Placard	Replacement of the Self-adhesive Placards self adhesive
07A-001	Housing	07A-250	Placard	Replacement of the Self-adhesive Placards self adhesive

Table 3260
Reference list for the replacement of permanent installed parts

(b) Remove the screw 07A-260, the washer 07A-270 and the housing assembly 07A-010 from the lavatory structure.

(c) Remove the stud 07A-160 from the housing assembly 07A-010.

(d) Remove the glass mirror 07A-150 from the screws 07A-170.

(e) Remove the screws 07A-170 from the housing assembly 07A-010.

(f) Remove the screws 07A-070 and the fittings 07A-060.

SUB TASK 25-41-51-000-140-C01
D2549010505600 D2549010507800

3. Removal of the Housing (07A-1)

NOTE: **See TABLE 3261 for the references for the replacement procedure of permanent installed parts.**

More data for bonded parts are given in column SEE REPAIR TASK. Use the data for the selection of the related repair solution.

IPL FIG. ITEM	COMPONENT PART NAME	IPL FIG. ITEM	REPLACEMENT PART NAME	SEE REPAIR TASK
07A-001 07A-010	Housing Housing Assembly	07A-020	Sliding Strip	Replacement of the Bonded Parts self adhesive
07A-001 07A-010	Housing Housing Assembly	07A-030	Sliding Strip	Replacement of the Bonded Parts self adhesive
07A-001 07A-010	Housing Housing Assembly	07A-040	Scuff Plate	Replacement of the Bonded Parts Material No. 08-001 General Purpose Adhesive Honeycomb Filler
07A-001	Housing	07A-180	Section	Replacement of the Bonded Parts Material No. 08-026 Adhesive/

Table 3261
Reference list for the replacement of permanent installed parts

				Sealant one Part, RTV Silicone Rubber
07A-001	Housing	07A-190	Sealing Section	Replacement of the Bonded Parts Material No. 08-026 Adhesive/ Sealant one Part, RTV Silicone Rubber
07A-001	Housing	07A-240	Placard	Replacement of the Self-adhesive Placards self adhesive
07A-001	Housing	07A-250	Placard	Replacement of the Self-adhesive Placards self adhesive

Table 3261
Reference list for the replacement of permanent installed parts

(b) Remove the screw 07A-260, the washer 07A-270 and the housing assembly 07A-010 from the lavatory structure.

(c) Remove the stud 07A-160 from the housing assembly 07A-010.

(d) Remove the glass mirror 07A-150 from the screws 07A-170.

(e) Remove the screws 07A-170 from the housing assembly 07A-010.

(f) Remove the screws 07A-290, 07A-300, the washers 07A-310, the nuts 07A-320 and the cosmetics holder 07A-280.

(g) Remove the screws 07A-070 and the fittings 07A-060.

TASK 25-41-51-000-805-C01

D2549010500000 D2549010500800 D2549010501200 D2549010508400 D2549010508800 D2549010510800 D2549010511000 D2549010512400 D2549010514800 D2549010603800 D2549010604200 D2549010606200 D2549020402000 D2549020500200 D2549020500400 D2549020500800 D2549020501200 D2549020501800 D2549020502000 D2549020509200 D2549020601200 D2549020601800 D2549020603400 D2549020603800 D2549020606600 D2549020610600 D2549020611000 D2549020700200 D2549020701800 D2549020702400 D2549020703200 D2549020704800 D2549020708200 D2549030501800 D2549030502400 D2549030504800 D2549030505200 D2549030506400 D2549030508800 D2549030509200 D2549030510400 D2549030513600 R225401137-000 R225401137-002 R225401137-004 R225401137-006 R225401137-008 R225401137-010 R225401137-012 R225401137-014 R225401153-000 R225401176-000 R225401600-000 R225401600-002

46. Removal of the Housing

A. General

A complete disassembly of the component is not necessary and not recommended.

Do not disassemble the component more than it is necessary for:

- Cleaning
- Visual Inspection
- Replacement of defective parts.

B. Job Set-up Information
(1) Consumable Materials

REFERENCE	DESIGNATION
08-001	General Purpose Adhesive Honeycomb Filler
08-026	Adhesive/Sealant one Part, RTV Silicone Rubber

Table 3262
Consumable Materials

C. Procedure

WARNING: **BE CAREFUL WHEN YOU USE SOLVENTS/CLEANING AGENTS, SEALANTS AND OTHER MATERIALS. OBEY THE MATERIAL MANUFACTURER'S INSTRUCTIONS AND THE LOCAL REGULATIONS. MAKE SURE THAT THERE IS A GOOD FLOW OF AIR THROUGH THE WORK AREA. DO NOT BREATHE THE FUMES. DO NOT SMOKE. DO NOT USE THESE MATERIALS NEAR A FLAME, SPARKS OR SOURCES OF HEAT. USE PROTECTIVE CLOTHING, GOGGLES AND GLOVES. IF YOU GET ONE OF THESE MATERIALS ON YOUR SKIN OR IN YOUR EYES, FLUSH IT AWAY WITH A FLOW OF CLEAN WATER. IF YOU GET ONE OF THESE MATERIALS IN YOUR MOUTH, GET IMMEDIATE MEDICAL AID. IN GENERAL, THESE MATERIALS ARE POISONOUS, FLAMMABLE AND SKIN IRRITANTS.**

CAUTION: **DO ALL THE WORK ON A CLEAN, SOFT SURFACE TO PREVENT DAMAGE TO THE COMPONENTS.**

SUB TASK 25-41-51-000-144-A01

D2549010500000 D2549010500800 D2549010501200 D2549010508400 D2549010508800 D2549010510800 D2549010511000 D2549010512400 D2549010514800 D2549010603800 D2549010604200 D2549020402000 D2549020500200 D2549020500400 D2549020500800 D2549020501200 D2549020501800 D2549020502000 D2549020509200 D2549020601200 D2549020601800 D2549020603400 D2549020603800 D2549020610600 D2549020611000 D2549020700200 D2549020701800 D2549020702400 D2549020703200 D2549020704800 D2549020708200 D2549030501800 D2549030502400 D2549030504800 D2549030505200 D2549030506400 D2549030508800 D2549030509200 D2549030510400 D2549030513600 R225401137-000 R225401137-002 R225401137-004 R225401137-006 R225401137-008 R225401137-010 R225401137-012 R225401137-014 R225401153-000 R225401176-000 R225401600-000 R225401600-002

1. Removal of the Housing (07B-1)

NOTE: **See TABLE 3263 for the references for the replacement procedure of permanent installed parts.**

More data for bonded parts are given in column SEE REPAIR TASK. Use the data for the selection of the related repair solution.

IPL FIG. ITEM	COMPONENT PART NAME	IPL FIG. ITEM	REPLACEMENT PART NAME	SEE REPAIR TASK
07B-001 07B-010	Housing Housing Assembly	07B-020	Sliding Strip	Replacement of the Bonded Parts self adhesive
07B-001 07B-010	Housing Housing Assembly	07B-030	Sliding Strip	Replacement of the Bonded Parts self adhesive
07B-001 07B-010	Housing Housing Assembly	07B-040	Scuff Plate	Replacement of the Bonded Parts Material No. 08-001 General Purpose Adhesive Honeycomb Filler
07B-001	Housing	07B-170	Section	Replacement of the Bonded Parts Material No. 08-026 Adhesive/ Sealant one Part, RTV Silicone Rubber
07B-001	Housing	07B-180	Sealing Section	Replacement of the Bonded Parts Material No. 08-026 Adhesive/ Sealant one Part, RTV Silicone Rubber

Table 3263
Reference list for the replacement of permanent installed parts

07B-001	Housing	07B-280	Placard	Replacement of the Self-adhesive Placards self adhesive
07B-001	Housing	07B-290	Placard	Replacement of the Self-adhesive Placards self adhesive

Table 3263
Reference list for the replacement of permanent installed parts

(b) Remove the screw 07B-190, the washer 07B-200 and the housing assembly 07B-010 from the lavatory structure.

(c) Remove the stud 07B-150 from the housing assembly 07B-010.

(d) Remove the glass mirror 07B-140 from the screws 07B-160.

(e) Remove the screws 07B-160 from the housing assembly 07B-010.

(f) Remove the screws 07B-070 and the fittings 07B-060.

SUB TASK 25-41-51-000-144-B01
D2549020606600

2. Removal of the Housing (07B-1)

NOTE: **See TABLE 3264 for the references for the replacement procedure of permanent installed parts.**

More data for bonded parts are given in column SEE REPAIR TASK. Use the data for the selection of the related repair solution.

IPL FIG. ITEM	COMPONENT PART NAME	IPL FIG. ITEM	REPLACEMENT PART NAME	SEE REPAIR TASK
07B-001 07B-010	Housing Housing Assembly	07B-020	Sliding Strip	Replacement of the Bonded Parts self adhesive
07B-001 07B-010	Housing Housing Assembly	07B-030	Sliding Strip	Replacement of the Bonded Parts self adhesive
07B-001 07B-010	Housing Housing Assembly	07B-040	Scuff Plate	Replacement of the Bonded Parts Material No. 08-001 General Purpose Adhesive Honeycomb Filler
07B-001	Housing	07B-170	Section	Replacement of the Bonded Parts Material No. 08-026 Adhesive/ Sealant one Part, RTV Silicone Rubber
07B-001	Housing	07B-180	Sealing Section	Replacement of the Bonded Parts Material No. 08-026 Adhesive/ Sealant one Part, RTV Silicone Rubber

Table 3264
Reference list for the replacement of permanent installed parts

07B-001	Housing	07B-280	Placard	Replacement of the Self-adhesive Placards self adhesive
07B-001	Housing	07B-290	Placard	Replacement of the Self-adhesive Placards self adhesive

Table 3264
Reference list for the replacement of permanent installed parts

(b) Remove the screw 07B-190, the washer 07B-200 and the housing assembly 07B-010 from the lavatory structure.

(c) Remove the stud 07B-150 from the housing assembly 07B-010.

(d) Remove the glass mirror 07B-140 from the screws 07B-160.

(e) Remove the screws 07B-160 from the housing assembly 07B-010.

(f) Remove the screws 07B-057 and the armor plates 07B-053, 07B-055 from the housing assembly 07B-010.

(g) Remove the screws 07B-070 and the fittings 07B-060.

SUB TASK 25-41-51-000-144-C01
D2549010606200

3. Removal of the Housing (07B-1)

NOTE: **See TABLE 3265 for the references for the replacement procedure of permanent installed parts.**

More data for bonded parts are given in column SEE REPAIR TASK. Use the data for the selection of the related repair solution.

IPL FIG. ITEM	COMPONENT PART NAME	IPL FIG. ITEM	REPLACEMENT PART NAME	SEE REPAIR TASK
07B-001 07B-010	Housing Housing Assembly	07B-020	Sliding Strip	Replacement of the Bonded Parts self adhesive
07B-001 07B-010	Housing Housing Assembly	07B-030	Sliding Strip	Replacement of the Bonded Parts self adhesive
07B-001 07B-010	Housing Housing Assembly	07B-040	Scuff Plate	Replacement of the Bonded Parts Material No. 08-001 General Purpose Adhesive Honeycomb Filler
07B-001	Housing	07B-170	Section	Replacement of the Bonded Parts Material No. 08-026 Adhesive/ Sealant one Part, RTV Silicone Rubber
07B-001	Housing	07B-180	Sealing Section	Replacement of the Bonded Parts Material No. 08-026 Adhesive/ Sealant one Part, RTV Silicone Rubber

Table 3265
Reference list for the replacement of permanent installed parts

07B-001	Housing	07B-280	Placard	Replacement of the Self-adhesive Placards self adhesive
07B-001	Housing	07B-290	Placard	Replacement of the Self-adhesive Placards self adhesive

Table 3265
Reference list for the replacement of permanent installed parts

(b) Remove the screw 07B-190 and the housing assembly 07B-010 from the lavatory structure.

(c) Remove the stud 07B-150 from the housing assembly 07B-010.

(d) Remove the glass mirror 07B-140 from the screws 07B-160.

(e) Remove the screws 07B-160 from the housing assembly 07B-010.

(f) Remove the screws 07B-070 and the fittings 07B-060.

TASK 25-41-51-000-805-D01

D2549010506800 D2549010508000 D2549010509200 D2549010511400 D2549010513400 D2549010607400 D2549020602600 D2549020602800 D2549020603600 D2549020604000 D2549020607200 D2549020609200 D2549020609400 D2549020612000 D2549020612600 D2549020702800 D2549020704600 D2549020707600 D2549030502600 D2549030506000 D2549030508400 D2549030509800 D2549030510000 D2549030601400 D2549030602200 D2549030604400 D2549030608200 R225401134-000 R225401160-000 R225401160-002 R225401172-006 R225401188-006

47. Removal of the Housing

A. General

A complete disassembly of the component is not necessary and not recommended.

Do not disassemble the component more than it is necessary for:

- Cleaning
- Visual Inspection
- Replacement of defective parts.

B. Job Set-up Information
(1) Consumable Materials

REFERENCE	DESIGNATION
08-001	General Purpose Adhesive Honeycomb Filler
08-026	Adhesive/Sealant one Part, RTV Silicone Rubber

Table 3266
Consumable Materials

C. Procedure

WARNING: **BE CAREFUL WHEN YOU USE SOLVENTS/CLEANING AGENTS, SEALANTS AND OTHER MATERIALS. OBEY THE MATERIAL MANUFACTURER'S INSTRUCTIONS AND THE LOCAL REGULATIONS. MAKE SURE THAT THERE IS A GOOD FLOW OF AIR THROUGH THE WORK AREA. DO NOT BREATHE THE FUMES. DO NOT SMOKE. DO NOT USE THESE MATERIALS NEAR A FLAME, SPARKS OR SOURCES OF HEAT. USE PROTECTIVE CLOTHING, GOGGLES AND GLOVES. IF YOU GET ONE OF THESE MATERIALS ON YOUR SKIN OR IN YOUR EYES, FLUSH IT AWAY WITH A FLOW OF CLEAN WATER. IF YOU GET ONE OF THESE MATERIALS IN YOUR MOUTH, GET IMMEDIATE MEDICAL AID. IN GENERAL, THESE MATERIALS ARE POISONOUS, FLAMMABLE AND SKIN IRRITANTS.**

CAUTION: **DO ALL THE WORK ON A CLEAN, SOFT SURFACE TO PREVENT DAMAGE TO THE COMPONENTS.**

SUB TASK 25-41-51-000-147-A01

1. Removal of the Housing (07C-1)

NOTE: **See TABLE 3267 for the references for the replacement procedure of permanent installed parts.**

More data for bonded parts are given in column SEE REPAIR TASK. Use the data for the selection of the related repair solution.

IPL FIG. ITEM	COMPONENT PART NAME	IPL FIG. ITEM	REPLACEMENT PART NAME	SEE REPAIR TASK
07C-001 07C-010	Housing Housing Assembly	07C-020	Sliding Strip	Replacement of the Bonded Parts self adhesive
07C-001 07C-010	Housing Housing Assembly	07C-030	Sliding Strip	Replacement of the Bonded Parts self adhesive
07C-001 07C-010	Housing Housing Assembly	07C-040	Scuff Plate	Replacement of the Bonded Parts

Table 3267
Reference list for the replacement of permanent installed parts

				Material No. 08-001 General Purpose Adhesive Honeycomb Filler
07C-001	Housing	07C-160	Section	Replacement of the Bonded Parts Material No. 08-026 Adhesive/ Sealant one Part, RTV Silicone Rubber
07C-001	Housing	07C-170	Sealing Section	Replacement of the Bonded Parts Material No. 08-026 Adhesive/ Sealant one Part, RTV Silicone Rubber
07C-001	Housing	07C-190	Placard	Replacement of the Self-adhesive Placards self adhesive
07C-001	Housing	07C-200	Placard	Replacement of the Self-adhesive Placards self adhesive

Table 3267
Reference list for the replacement of permanent installed parts

(b) Remove the screw 07C-210, the washer 07C-220 and the housing assembly 07C-010 from the lavatory structure.

(c) Remove the stud 07C-140 from the housing assembly 07C-010.

(d) Remove the glass mirror 07C-130 from the screws 07C-150.

(e) Remove the screws 07C-150 from the housing assembly 07C-010.

(f) Remove the screws 07C-070 and the fittings 07C-060.

TASK 25-41-51-000-805-E01

D2549010509400 D2549010509800 D2549010510000 D2549010510400 D2549010511600
D2549010512000 D2549010512200 D2549010514400 D2549010600000 D2549010600800
D2549010602400 D2549010605000 D2549020506200 D2549020506400 D2549020507000
D2549020507200 D2549020508200 D2549020509800 D2549020512800 D2549020514000
D2549020602200 D2549020604200 D2549020604400 D2549020605600 D2549020607600
D2549020608200 D2549020609000 D2549020609800 D2549020610000 D2549020610400
D2549020611200 D2549020611400 D2549020612800 D2549020613600 D2549020614400
D2549020700800 D2549020701000 D2549020702600 D2549020704000 D2549020704200
D2549020704400 D2549020706200 D2549020706800 D2549020709600 D2549020710800
D2549020711000 D2549020711200 D2549020712200 D2549020713600 D2549020714600
D2549030504000 D2549030504600 D2549030505400 D2549030505600 D2549030505800
D2549030506600 D2549030506800 D2549030507800 D2549030508000 D2549030509400
D2549030509600 D2549030513000 D2549030513800 D2549030514000 D2549030514200
D2549030514400 D2549030600600 D2549030601200 D2549030601800 D2549030602800
D2549030603400 D2549030603800 D2549030604800 D2549030605200 D2549030605400
D2549030605800 D2549030606200 D2549030607000 D2549030607400 D2549030607600
D2549030608800 D2549030609200 R225401134-002 R225401134-004 R225401134-006
R225401134-008 R225401134-010 R225401134-016 R225401134-018 R225401134-020
R225401134-022 R225401134-024 R225401142-000 R225401142-002 R225401145-004
R225401172-012 R225401172-014 R225401605-000

48. Removal of the Housing

A. General

A complete disassembly of the component is not necessary and not recommended.

Do not disassemble the component more than it is necessary for:

- Cleaning
- Visual Inspection
- Replacement of defective parts.

B. Job Set-up Information
(1) Consumable Materials

REFERENCE	DESIGNATION
08-001	General Purpose Adhesive Honeycomb Filler
08-026	Adhesive/Sealant one Part, RTV Silicone Rubber

Table 3268
Consumable Materials

C. Procedure

WARNING: **BE CAREFUL WHEN YOU USE SOLVENTS/CLEANING AGENTS, SEALANTS AND OTHER MATERIALS. OBEY THE MATERIAL MANUFACTURER'S INSTRUCTIONS AND THE LOCAL REGULATIONS. MAKE SURE THAT THERE IS A GOOD FLOW OF AIR THROUGH THE WORK AREA. DO NOT BREATHE THE FUMES. DO NOT SMOKE. DO NOT USE THESE MATERIALS NEAR A FLAME, SPARKS OR SOURCES OF HEAT. USE PROTECTIVE CLOTHING, GOGGLES AND GLOVES. IF YOU GET ONE OF THESE MATERIALS ON YOUR SKIN OR IN YOUR EYES, FLUSH IT AWAY WITH A FLOW OF CLEAN WATER. IF YOU GET ONE OF THESE MATERIALS IN YOUR MOUTH, GET IMMEDIATE MEDICAL AID. IN GENERAL, THESE MATERIALS ARE POISONOUS, FLAMMABLE AND SKIN IRRITANTS.**

CAUTION: **DO ALL THE WORK ON A CLEAN, SOFT SURFACE TO PREVENT DAMAGE TO THE COMPONENTS.**

SUB TASK 25-41-51-010-044-A01

D2549010509400 D2549010509800 D2549010510000 D2549010510400
D2549010511600 D2549010512000 D2549010512200 D2549010514400
D2549010600000 D2549010600800 D2549010602400 D2549010605000
D2549020506200 D2549020506400 D2549020507000 D2549020507200
D2549020508200 D2549020509800 D2549020512800 D2549020514000
D2549020602200 D2549020604200 D2549020605600 D2549020607600
D2549020608200 D2549020609000 D2549020609800 D2549020610000
D2549020610400 D2549020611200 D2549020611400 D2549020612800
D2549020613600 D2549020614400 D2549020700800 D2549020701000
D2549020702600 D2549020704000 D2549020704200 D2549020704400
D2549020706200 D2549020706800 D2549020709600 D2549020710800
D2549020711000 D2549020711200 D2549020712200 D2549020713600
D2549020714600 D2549030504000 D2549030504600 D2549030505400
D2549030505600 D2549030505800 D2549030506600 D2549030506800
D2549030507800 D2549030508000 D2549030509400 D2549030509600
D2549030513000 D2549030513800 D2549030514000 D2549030514200
D2549030514400 D2549030600600 D2549030601200 D2549030601800
D2549030602800 D2549030603400 D2549030603800 D2549030604800
D2549030605200 D2549030605400 D2549030605800 D2549030606200

D2549030607000 D2549030607400 D2549030607600 D2549030608800 D2549030609200 R225401134-002 R225401134-004 R225401134-006 R225401134-008 R225401134-010 R225401134-016 R225401134-018 R225401134-020 R225401134-022 R225401134-024 R225401142-000 R225401142-002 R225401145-004 R225401172-012 R225401172-014 R225401605-000

1. Removal of the Housing (07D-1)

NOTE: **See TABLE 3269 for the references for the replacement procedure of permanent installed parts.**

More data for bonded parts are given in column SEE REPAIR TASK. Use the data for the selection of the related repair solution.

IPL FIG. ITEM	COMPONENT PART NAME	IPL FIG. ITEM	REPLACEMENT PART NAME	SEE REPAIR TASK
07D-001 07D-010	Housing Housing Assembly	07D-020	Sliding Strip	Replacement of the Bonded Parts self adhesive
07D-001 07D-010	Housing Housing Assembly	07D-030	Sliding Strip	Replacement of the Bonded Parts self adhesive
07D-001 07D-010	Housing Housing Assembly	07D-040	Scuff Plate	Replacement of the Bonded Parts Material No. 08-001 General Purpose Adhesive Honeycomb Filler
07D-001	Housing	07D-170	Section	Replacement of the Bonded Parts Material No. 08-026 Adhesive/

Table 3269
Reference list for the replacement of permanent installed parts

				Sealant one Part, RTV Silicone Rubber
07D-001	Housing	07D-180	Sealing Section	Replacement of the Bonded Parts Material No. 08-026 Adhesive/ Sealant one Part, RTV Silicone Rubber
07D-001	Housing	07D-190	Placard	Replacement of the Self-adhesive Placards self adhesive
07D-001	Housing	07D-200	Placard	Replacement of the Self-adhesive Placards self adhesive

Table 3269
Reference list for the replacement of permanent installed parts

(b) Remove the screw 07D-210, the washer 07D-220 and the housing assembly 07D-010 from the lavatory structure.

(c) Remove the stud 07D-150 from the housing assembly 07D-010.

(d) Remove the glass mirror 07D-140 from the screws 07D-160.

(e) Remove the screws 07D-160 from the housing assembly 07D-010.

(f) Remove the screws 07D-070 and the fittings 07D-060.

SUB TASK 25-41-51-010-044-B01
D2549020604400

2. Removal of the Housing (07D-1)

NOTE: **See TABLE 3270 for the references for the replacement procedure of permanent installed parts.**

More data for bonded parts are given in column SEE REPAIR TASK. Use the data for the selection of the related repair solution.

IPL FIG. ITEM	COMPONENT PART NAME	IPL FIG. ITEM	REPLACEMENT PART NAME	SEE REPAIR TASK
07D-001 07D-010	Housing Housing Assembly	07D-020	Sliding Strip	Replacement of the Bonded Parts self adhesive
07D-001 07D-010	Housing Housing Assembly	07D-030	Sliding Strip	Replacement of the Bonded Parts self adhesive
07D-001 07D-010	Housing Housing Assembly	07D-040	Scuff Plate	Replacement of the Bonded Parts Material No. 08-001 General Purpose Adhesive Honeycomb Filler
07D-001	Housing	07D-170	Section	Replacement of the Bonded Parts Material No. 08-026 Adhesive/ Sealant one Part, RTV Silicone Rubber
07D-001	Housing	07D-180	Sealing Section	Replacement of the Bonded Parts

Table 3270
Reference list for the replacement of permanent installed parts

				Material No. 08-026 Adhesive/ Sealant one Part, RTV Silicone Rubber
07D-001	Housing	07D-190	Placard	Replacement of the Self-adhesive Placards self adhesive
07D-001	Housing	07D-200	Placard	Replacement of the Self-adhesive Placards self adhesive

Table 3270
Reference list for the replacement of permanent installed parts

(b) Remove the screw 07D-210, the washer 07D-220 and the housing assembly 07D-010 from the lavatory structure.

(c) Remove the stud 07D-150 from the housing assembly 07D-010.

(d) Remove the glass mirror 07D-140 from the screws 07D-160.

(e) Remove the screws 07D-160 from the housing assembly 07D-010.

(f) Remove the screws 07D-240, the washers 07D-250 and the cosmetics holder 07D-230.

NOTE: For further instructions, see CMMV 25-20-08_C5307 (cosmetics holder).

(g) Remove the screws 07D-070 and the fittings 07D-060.

TASK 25-41-51-000-805-F01

D2549010513600 D2549010513800 D2549010514000 D2549010600200 D2549010601600 D2549010604000 D2549020506600 D2549020507800 D2549020605000 D2549020605400 D2549020605800 D2549020607400 D2549020608400 D2549020608600 D2549020610200 D2549020610800 D2549020611600 D2549020612200 D2549020613000 D2549020613800 D2549020614000 D2549020700000 D2549020702000 D2549020702200 D2549020705400 D2549020707400 D2549020708000 D2549020708400 D2549020709400 D2549030506200 D2549030507200 D2549030507400 D2549030507600 D2549030508600 D2549030510200 D2549030511800 D2549030600400 D2549030600800 D2549030601600 D2549030603000 D2549030603600 R225401136-016 R225401168-004 R225401168-006 R225401168-014 R225401168-016 R225401168-018 R225401168-028 R225401175-000 R225401175-002

49. Removal of the Housing

A. General

A complete disassembly of the component is not necessary and not recommended.

Do not disassemble the component more than it is necessary for:

- Cleaning
- Visual Inspection
- Replacement of defective parts.

B. Job Set-up Information
(1) Consumable Materials

REFERENCE	DESIGNATION
08-010A	Epoxy Resin and Hardener Adhesive
08-026	Adhesive/Sealant one Part, RTV Silicone Rubber

Table 3271
Consumable Materials

C. Procedure

WARNING: **BE CAREFUL WHEN YOU USE SOLVENTS/CLEANING AGENTS, SEALANTS AND OTHER MATERIALS. OBEY THE MATERIAL MANUFACTURER'S INSTRUCTIONS AND THE LOCAL REGULATIONS. MAKE SURE THAT THERE IS A GOOD FLOW OF AIR THROUGH THE WORK AREA. DO NOT BREATHE THE FUMES. DO NOT SMOKE. DO NOT USE THESE MATERIALS NEAR A FLAME, SPARKS OR SOURCES OF HEAT. USE PROTECTIVE CLOTHING, GOGGLES AND GLOVES. IF YOU GET ONE OF THESE MATERIALS ON YOUR SKIN OR IN YOUR EYES, FLUSH IT AWAY WITH A FLOW OF CLEAN WATER. IF YOU GET ONE OF THESE MATERIALS IN YOUR MOUTH, GET IMMEDIATE MEDICAL AID. IN GENERAL, THESE MATERIALS ARE POISONOUS, FLAMMABLE AND SKIN IRRITANTS.**

CAUTION: **DO ALL THE WORK ON A CLEAN, SOFT SURFACE TO PREVENT DAMAGE TO THE COMPONENTS.**

SUB TASK 25-41-51-010-045-A01

D2549010513600 D2549010513800 D2549010514000 D2549010600200 D2549010601600 D2549010604000 D2549020506600 D2549020507800 D2549020605000 D2549020605400 D2549020605800 D2549020607400 D2549020608400 D2549020610200 D2549020610800 D2549020611600 D2549020612200 D2549020613000 D2549020613800 D2549020614000 D2549020700000 D2549020702000 D2549020702200 D2549020705400 D2549020707400 D2549020708000 D2549020708400 D2549020709400 D2549030506200 D2549030507200 D2549030507400 D2549030507600 D2549030508600 D2549030510200 D2549030511800 D2549030600400 D2549030600800 D2549030601600 D2549030603000 D2549030603600 R225401136-016 R225401168-004 R225401168-006 R225401168-014 R225401168-016 R225401168-018 R225401168-028 R225401175-000 R225401175-002

1. Removal of the Housing (07E-1)

NOTE: **See TABLE 3272 for the references for the replacement procedure of permanent installed parts.**

More data for bonded parts are given in column SEE REPAIR TASK. Use the data for the selection of the related repair solution.

IPL FIG. ITEM	COMPONENT PART NAME	IPL FIG. ITEM	REPLACEMENT PART NAME	SEE REPAIR TASK
07E-001 07E-010	Housing Housing Assembly	07E-020	Sliding Strip	Replacement of the Bonded Parts self adhesive
07E-001 07E-010	Housing Housing Assembly	07E-030	Sliding Strip	Replacement of the Bonded Parts self adhesive
07E-001 07E-010	Housing Housing Assembly	07E-040	Scuff Plate	Replacement of the Bonded Parts Material No. 08-010A Epoxy Resin and Hardener Adhesive
07E-001	Housing	07E-150	Section	Replacement of the Bonded Parts Material No. 08-026 Adhesive/ Sealant one Part, RTV Silicone Rubber
07E-001	Housing	07E-160	Sealing Section	Replacement of the Bonded Parts Material No. 08-026 Adhesive/ Sealant one Part, RTV Silicone Rubber

Table 3272
Reference list for the replacement of permanent installed parts

07E-001	Housing	07E-170	Placard	Replacement of the Self-adhesive Placards self adhesive
07E-001	Housing	07E-180	Placard	Replacement of the Self-adhesive Placards self adhesive

Table 3272
Reference list for the replacement of permanent installed parts

(b) Remove the screw 07E-190, the washer 07E-200 and the housing assembly 07E-010 from the lavatory structure.

(c) Remove the stud 07E-130 from the housing assembly 07E-010.

(d) Remove the glass mirror 07E-120 from the screws 07E-140.

(e) Remove the screws 07E-140 from the housing assembly 07E-010.

(f) Remove the screws 07E-070 and the fittings 07E-060.

SUB TASK 25-41-51-010-045-B01
D2549020608600

2. Removal of the Housing (07E-1)

NOTE: **See TABLE 3273 for the references for the replacement procedure of permanent installed parts.**

More data for bonded parts are given in column SEE REPAIR TASK. Use the data for the selection of the related repair solution.

IPL FIG. ITEM	COMPONENT PART NAME	IPL FIG. ITEM	REPLACEMENT PART NAME	SEE REPAIR TASK
07E-001 07E-010	Housing Housing Assembly	07E-020	Sliding Strip	Replacement of the Bonded Parts self adhesive
07E-001 07E-010	Housing Housing Assembly	07E-030	Sliding Strip	Replacement of the Bonded Parts self adhesive
07E-001 07E-010	Housing Housing Assembly	07E-040	Scuff Plate	Replacement of the Bonded Parts Material No. 08-010A Epoxy Resin and Hardener Adhesive
07E-001	Housing	07E-150	Section	Replacement of the Bonded Parts Material No. 08-026 Adhesive/ Sealant one Part, RTV Silicone Rubber
07E-001	Housing	07E-160	Sealing Section	Replacement of the Bonded Parts Material No. 08-026 Adhesive/ Sealant one Part, RTV Silicone Rubber

Table 3273
Reference list for the replacement of permanent installed parts

07E-001	Housing	07E-170	Placard	Replacement of the Self-adhesive Placards self adhesive
07E-001	Housing	07E-180	Placard	Replacement of the Self-adhesive Placards self adhesive

Table 3273
Reference list for the replacement of permanent installed parts

(b) Remove the screw 07E-190, the washer 07E-200 and the housing assembly 07E-010 from the lavatory structure.

(c) Remove the stud 07E-130 from the housing assembly 07E-010.

(d) Remove the glass mirror 07E-120 from the screws 07E-140.

(e) Remove the screws 07E-140 from the housing assembly 07E-010.

(f) Remove the screws 07E-220, the washers 07E-230 and the cosmetics holder 07E-210.

NOTE: For further instructions, see CMMV 25-20-08_C5307 (cosmetics holder).

(g) Remove the screws 07E-070 and the fittings 07E-060.

TASK 25-41-51-000-805-G01
D2549010600400 D2549010600600 D2549010601200 D2549010601400 D2549010602000 D2549010602200 D2549010602800 D2549010603200 D2549010604600 D2549010604800 D2549010606400 D2549010607800 D2549020506800 D2549020508000 D2549020508600 D2549020512600 D2549020604600 D2549020612400 D2549020614600 D2549020701400 D2549020703600 D2549020703800 D2549020706600 D2549020707000 D2549020709000 D2549020710200 D2549020710400 D2549020713800 D2549030510600 D2549030510800 D2549030511000 D2549030511400 D2549030512000 D2549030513400 D2549030514600 D2549030514800 D2549030605600 D2549030608600 D2549030610200 R225401136-000 R225401136-010 R225401136-020 R225401136-022 R225401183-000 R225401183-008 R225401603-000

50. Removal of the Housing

A. General

A complete disassembly of the component is not necessary and not recommended.

Do not disassemble the component more than it is necessary for:

- Cleaning
- Visual Inspection
- Replacement of defective parts.

B. Job Set-up Information
(1) Consumable Materials

REFERENCE	DESIGNATION
08-001	General Purpose Adhesive Honeycomb Filler
08-026	Adhesive/Sealant one Part, RTV Silicone Rubber

Table 3274
Consumable Materials

C. Procedure

WARNING: **BE CAREFUL WHEN YOU USE SOLVENTS/CLEANING AGENTS, SEALANTS AND OTHER MATERIALS. OBEY THE MATERIAL MANUFACTURER'S INSTRUCTIONS AND THE LOCAL REGULATIONS. MAKE SURE THAT THERE IS A GOOD FLOW OF AIR THROUGH THE WORK AREA. DO NOT BREATHE THE FUMES. DO NOT SMOKE. DO NOT USE THESE MATERIALS NEAR A FLAME, SPARKS OR SOURCES OF HEAT. USE PROTECTIVE CLOTHING, GOGGLES AND GLOVES. IF YOU GET ONE OF THESE MATERIALS ON YOUR SKIN OR IN YOUR EYES, FLUSH IT AWAY WITH A FLOW OF CLEAN WATER. IF YOU GET ONE OF THESE MATERIALS IN YOUR MOUTH, GET IMMEDIATE MEDICAL AID. IN GENERAL, THESE MATERIALS ARE POISONOUS, FLAMMABLE AND SKIN IRRITANTS.**

CAUTION: **DO ALL THE WORK ON A CLEAN, SOFT SURFACE TO PREVENT DAMAGE TO THE COMPONENTS.**

SUB TASK 25-41-51-010-046-A01

D2549010600400 D2549010600600 D2549010601200 D2549010601400 D2549010602000 D2549010602200 D2549010602800 D2549010603200 D2549010604600 D2549010604800 D2549010606400 D2549010607800 D2549020508000 D2549020508600 D2549020512600 D2549020612400 D2549020701400 D2549020706600 D2549020709000 D2549020710200 D2549020710400 D2549020713800 D2549030510600 D2549030510800 D2549030511000 D2549030511400 D2549030512000 D2549030513400 D2549030514600 D2549030514800 D2549030605600 D2549030608600 D2549030610200 R225401136-000 R225401136-010 R225401136-020 R225401136-022 R225401183-000 R225401183-008 R225401603-000

1. Removal of the Housing (07F-1)

NOTE: **See TABLE 3275 for the references for the replacement procedure of permanent installed parts.**

More data for bonded parts are given in column SEE REPAIR TASK. Use the data for the selection of the related repair solution.

IPL FIG. ITEM	COMPONENT PART NAME	IPL FIG. ITEM	REPLACEMENT PART NAME	SEE REPAIR TASK
07F-001 07F-010	Housing	07F-020	Sliding Strip	Replacement of the Bonded Parts

Table 3275
Reference list for the replacement of permanent installed parts

	Housing Assembly			self adhesive
07F-001 07F-010	Housing Housing Assembly	07F-030	Sliding Strip	Replacement of the Bonded Parts self adhesive
07F-001 07F-010	Housing Housing Assembly	07F-040	Scuff Plate	Replacement of the Bonded Parts Material No. 08-001 General Purpose Adhesive Honeycomb Filler
07F-001	Housing	07F-180	Section	Replacement of the Bonded Parts Material No. 08-026 Adhesive/ Sealant one Part, RTV Silicone Rubber
07F-001	Housing	07F-190	Sealing Section	Replacement of the Bonded Parts Material No. 08-026 Adhesive/ Sealant one Part, RTV Silicone Rubber

Table 3275
Reference list for the replacement of permanent installed parts

07F-001	Housing	07F-200	Placard	Replacement of the Self-adhesive Placards self adhesive
07F-001	Housing	07F-210	Placard	Replacement of the Self-adhesive Placards self adhesive

Table 3275
Reference list for the replacement of permanent installed parts

(b) Remove the screw 07F-220, the washer 07F-230 and the housing assembly 07F-010 from the lavatory structure.

(c) Remove the stud 07F-160 from the housing assembly 07F-010.

(d) Remove the glass mirror 07F-150 from the screws 07F-170.

(e) Remove the screws 07F-170 from the housing assembly 07F-010.

(f) Remove the screws 07F-100 and the fittings 07F-090.

SUB TASK 25-41-51-010-046-B01
D2549020506800 D2549020604600 D2549020703600 D2549020703800

2. Removal of the Housing (07F-1)

NOTE: **See TABLE 3276 for the references for the replacement procedure of permanent installed parts.**

More data for bonded parts are given in column SEE REPAIR TASK. Use the data for the selection of the related repair solution.

IPL FIG. ITEM	COMPONENT PART NAME	IPL FIG. ITEM	REPLACEMENT PART NAME	SEE REPAIR TASK
07F-001 07F-010	Housing Housing Assembly	07F-020	Sliding Strip	Replacement of the Bonded Parts self adhesive
07F-001 07F-010	Housing Housing Assembly	07F-030	Sliding Strip	Replacement of the Bonded Parts self adhesive
07F-001 07F-010	Housing Housing Assembly	07F-040	Scuff Plate	Replacement of the Bonded Parts Material No. 08-001 General Purpose Adhesive Honeycomb Filler
07F-001	Housing	07F-180	Section	Replacement of the Bonded Parts Material No. 08-026 Adhesive/ Sealant one Part, RTV Silicone Rubber
07F-001	Housing	07F-190	Sealing Section	Replacement of the Bonded Parts Material No. 08-026 Adhesive/ Sealant one Part, RTV Silicone Rubber

Table 3276
Reference list for the replacement of permanent installed parts

07F-001	Housing	07F-200	Placard	Replacement of the Self-adhesive Placards self adhesive
07F-001	Housing	07F-210	Placard	Replacement of the Self-adhesive Placards self adhesive

Table 3276
Reference list for the replacement of permanent installed parts

(b) Remove the screw 07F-220, the washer 07F-230 and the housing assembly 07F-010 from the lavatory structure.

(c) Remove the stud 07F-160 from the housing assembly 07F-010.

(d) Remove the glass mirror 07F-150 from the screws 07F-170.

(e) Remove the screws 07F-170 from the housing assembly 07F-010.

(f) Remove the screws 07F-080 and the armor plates 07F-060, 07F-070 from the housing assembly 07F-010.

(g) Remove the screws 07F-100 and the fittings 07F-090.

SUB TASK 25-41-51-010-046-C01
D2549020614600 D2549020707000

3. Removal of the Housing (07F-1)

NOTE: **See TABLE 3277 for the references for the replacement procedure of permanent installed parts.**

More data for bonded parts are given in column SEE REPAIR TASK. Use the data for the selection of the related repair solution.

IPL FIG. ITEM	COMPONENT PART NAME	IPL FIG. ITEM	REPLACEMENT PART NAME	SEE REPAIR TASK
07F-001 07F-010	Housing Housing Assembly	07F-020	Sliding Strip	Replacement of the Bonded Parts self adhesive
07F-001 07F-010	Housing Housing Assembly	07F-030	Sliding Strip	Replacement of the Bonded Parts self adhesive
07F-001 07F-010	Housing Housing Assembly	07F-040	Scuff Plate	Replacement of the Bonded Parts Material No. 08-001 General Purpose Adhesive Honeycomb Filler
07F-001	Housing	07F-180	Section	Replacement of the Bonded Parts Material No. 08-026 Adhesive/ Sealant one Part, RTV Silicone Rubber
07F-001	Housing	07F-190	Sealing Section	Replacement of the Bonded Parts Material No. 08-026 Adhesive/ Sealant one Part, RTV Silicone Rubber

Table 3277
Reference list for the replacement of permanent installed parts

07F-001	Housing	07F-200	Placard	Replacement of the Self-adhesive Placards self adhesive
07F-001	Housing	07F-210	Placard	Replacement of the Self-adhesive Placards self adhesive

Table 3277
Reference list for the replacement of permanent installed parts

(b) Remove the screw 07F-220, the washer 07F-230 and the housing assembly 07F-010 from the lavatory structure.

(c) Remove the stud 07F-160 from the housing assembly 07F-010.

(d) Remove the glass mirror 07F-150 from the screws 07F-170.

(e) Remove the screws 07F-170 from the housing assembly 07F-010.

(f) Remove the screws 07F-250, the washers 07F-260 and the cosmetics holder 07F-240.

NOTE: For further instructions, see CMMV 25-20-08_C5307 (cosmetics holder).

(g) Remove the screws 07F-100 and the fittings 07F-090.

TASK 25-41-51-000-805-H01

D2549010509000 D2549010513200 D2549010601000 D2549010602600 D2549010603600 D2549010605600 D2549010605800 D2549010606000 D2549010608200 D2549020507400 D2549020507600 D2549020508400 D2549020508800 D2549020512000 D2549020512200 D2549020514200 D2549020514600 D2549020703400 D2549020705000 D2549020705200 D2549020707200 D2549020708600 D2549020709800 D2549020710000 D2549020710600 D2549020711400 D2549020712400 D2549020712800 D2549020713200 D2549030511200 D2549030511600 D2549030512200 D2549030512800 D2549030600000 D2549030602000 D2549030602400 D2549030604200 D2549030604600 D2549030606400 D2549030606600 D2549030606800 R225401115-000 R225401152-000 R225401152-002 R225401152-004 R225401152-006 R225401172-008 R225401195-000 R225401196-000 R225401196-002 R225401196-004 R225401196-034 R225401196-036 R225401196-046 R225401196-048 R225401196-050 R225401618-000 R225401618-002 R225401619-002

51. Removal of the Housing

A. General

A complete disassembly of the component is not necessary and not recommended.

Do not disassemble the component more than it is necessary for:

- Cleaning
- Visual Inspection
- Replacement of defective parts.

B. Job Set-up Information

(1) Consumable Materials

REFERENCE	DESIGNATION
08-001	General Purpose Adhesive Honeycomb Filler
08-026	Adhesive/Sealant one Part, RTV Silicone Rubber

Table 3278
Consumable Materials

C. Procedure

WARNING: **BE CAREFUL WHEN YOU USE SOLVENTS/CLEANING AGENTS, SEALANTS AND OTHER MATERIALS. OBEY THE MATERIAL MANUFACTURER'S INSTRUCTIONS AND THE LOCAL REGULATIONS. MAKE SURE THAT THERE IS A GOOD FLOW OF AIR THROUGH THE WORK AREA. DO NOT BREATHE THE FUMES. DO NOT SMOKE. DO NOT USE THESE MATERIALS NEAR A FLAME, SPARKS OR SOURCES OF HEAT. USE PROTECTIVE CLOTHING, GOGGLES AND GLOVES. IF YOU GET ONE OF THESE MATERIALS ON YOUR SKIN OR IN YOUR EYES, FLUSH IT AWAY WITH A FLOW OF CLEAN WATER. IF YOU GET ONE OF THESE MATERIALS IN YOUR MOUTH, GET IMMEDIATE MEDICAL AID. IN GENERAL, THESE MATERIALS ARE POISONOUS, FLAMMABLE AND SKIN IRRITANTS.**

CAUTION: **DO ALL THE WORK ON A CLEAN, SOFT SURFACE TO PREVENT DAMAGE TO THE COMPONENTS.**

SUB TASK 25-41-51-000-158-A01

D2549010509000 D2549010513200 D2549010601000 D2549010602600 D2549010603600 D2549010605600 D2549010605800 D2549010606000 D2549010608200 D2549020507400 D2549020507600 D2549020508400 D2549020508800 D2549020512000 D2549020512200 D2549020514200 D2549020514600 D2549020703400 D2549020705000 D2549020705200 D2549020707200 D2549020708600 D2549020709800 D2549020710000 D2549020711400 D2549020712400 D2549020712800 D2549020713200 D2549030511600 D2549030512200 D2549030600000 D2549030602000 D2549030602400 D2549030604200 D2549030604600 D2549030606400 D2549030606600 D2549030606800 R225401115-000 R225401152-000 R225401152-002 R225401152-004 R225401152-006 R225401172-008 R225401195-000 R225401196-000 R225401196-002 R225401196-004 R225401196-034 R225401196-036 R225401196-046 R225401196-048 R225401196-050 R225401618-000 R225401618-002 R225401619-002

1. Removal of the Housing (07G-1)

NOTE: **See TABLE 3279 for the references for the replacement procedure of permanent installed parts.**

More data for bonded parts are given in column SEE REPAIR TASK. Use the data for the selection of the related repair solution.

IPL FIG. ITEM	COMPONENT PART NAME	IPL FIG. ITEM	REPLACEMENT PART NAME	SEE REPAIR TASK
07G-001 07G-010	Housing Housing Assembly	07G-020	Sliding Strip	Replacement of the Bonded Parts self adhesive
07G-001 07G-010	Housing Housing Assembly	07G-030	Sliding Strip	Replacement of the Bonded Parts self adhesive
07G-001 07G-010	Housing Housing Assembly	07G-040	Scuff Plate	Replacement of the Bonded Parts Material No. 08-001 General Purpose Adhesive Honeycomb Filler
07G-001	Housing	07G-160	Section	Replacement of the Bonded Parts Material No. 08-026 Adhesive/ Sealant one Part, RTV Silicone Rubber
07G-001	Housing	07G-170	Sealing Section	Replacement of the Bonded Parts Material No. 08-026 Adhesive/ Sealant one Part, RTV Silicone Rubber

Table 3279
Reference list for the replacement of permanent installed parts

07G-001	Housing	07G-180	Placard	Replacement of the Self-adhesive Placards self adhesive
07G-001	Housing	07G-190	Placard	Replacement of the Self-adhesive Placards self adhesive

Table 3279
Reference list for the replacement of permanent installed parts

(b) Remove the screw 07G-200, the washer 07G-210 and the housing assembly 07G-010 from the lavatory structure.

(c) Remove the stud 07G-140 from the housing assembly 07G-010.

(d) Remove the glass mirror 07G-130 from the screws 07G-150.

(e) Remove the screws 07G-150 from the housing assembly 07G-010.

(f) Remove the screws 07G-070 and the fittings 07G-060.

SUB TASK 25-41-51-000-158-B01
D2549020710600 D2549030511200 D2549030512800

2. Removal of the Housing (07G-1)

NOTE: **See TABLE 3280 for the references for the replacement procedure of permanent installed parts.**

More data for bonded parts are given in column SEE REPAIR TASK. Use the data for the selection of the related repair solution.

IPL FIG. ITEM	COMPONENT PART NAME	IPL FIG. ITEM	REPLACEMENT PART NAME	SEE REPAIR TASK
07G-001 07G-010	Housing Housing Assembly	07G-020	Sliding Strip	Replacement of the Bonded Parts self adhesive
07G-001 07G-010	Housing Housing Assembly	07G-030	Sliding Strip	Replacement of the Bonded Parts self adhesive
07G-001 07G-010	Housing Housing Assembly	07G-040	Scuff Plate	Replacement of the Bonded Parts Material No. 08-001 General Purpose Adhesive Honeycomb Filler
07G-001	Housing	07G-160	Section	Replacement of the Bonded Parts Material No. 08-026 Adhesive/ Sealant one Part, RTV Silicone Rubber
07G-001	Housing	07G-170	Sealing Section	Replacement of the Bonded Parts Material No. 08-026 Adhesive/ Sealant one Part, RTV Silicone Rubber

Table 3280
Reference list for the replacement of permanent installed parts

07G-001	Housing	07G-180	Placard	Replacement of the Self-adhesive Placards self adhesive
07G-001	Housing	07G-190	Placard	Replacement of the Self-adhesive Placards self adhesive

Table 3280
Reference list for the replacement of permanent installed parts

(b) Remove the screw 07G-200, the washer 07G-210 and the housing assembly 07G-010 from the lavatory structure.

(c) Remove the stud 07G-140 from the housing assembly 07G-010.

(d) Remove the glass mirror 07G-130 from the screws 07G-150.

(e) Remove the screws 07G-150 from the housing assembly 07G-010.

(f) Remove the screws 07G-230, the washers 07G-240 and the soap dispenser holder 07G-220.

(g) Remove the bolts 07G-270, the spacer 07G-260 and the cosmetics holder 07G-250.

(h) Remove the screws 07G-070 and the fittings 07G-060.

TASK 25-41-51-000-805-J01
D2549020712000 D2549020712600

52. Removal of the Housing

A. General

A complete disassembly of the component is not necessary and not recommended.

Do not disassemble the component more than it is necessary for:

- Cleaning
- Visual Inspection
- Replacement of defective parts.

B. Job Set-up Information
(1) Consumable Materials

REFERENCE	DESIGNATION
08-010A	Epoxy Resin and Hardener Adhesive
08-026	Adhesive/Sealant one Part, RTV Silicone Rubber

Table 3281
Consumable Materials

C. Procedure

WARNING: **BE CAREFUL WHEN YOU USE SOLVENTS/CLEANING AGENTS, SEALANTS AND OTHER MATERIALS. OBEY THE MATERIAL MANUFACTURER'S INSTRUCTIONS AND THE LOCAL REGULATIONS. MAKE SURE THAT THERE IS A GOOD FLOW OF AIR THROUGH THE WORK AREA. DO NOT BREATHE THE FUMES. DO NOT SMOKE. DO NOT USE THESE MATERIALS NEAR A FLAME, SPARKS OR SOURCES OF HEAT. USE PROTECTIVE CLOTHING, GOGGLES AND GLOVES. IF YOU GET ONE OF THESE MATERIALS ON YOUR SKIN OR IN YOUR EYES, FLUSH IT AWAY WITH A FLOW OF CLEAN WATER. IF YOU GET ONE OF THESE MATERIALS IN YOUR MOUTH, GET IMMEDIATE MEDICAL AID. IN GENERAL, THESE MATERIALS ARE POISONOUS, FLAMMABLE AND SKIN IRRITANTS.**

CAUTION: **DO ALL THE WORK ON A CLEAN, SOFT SURFACE TO PREVENT DAMAGE TO THE COMPONENTS.**

SUB TASK 25-41-51-000-159-A01
D2549020712000 D2549020712600

1. Removal of the Housing (07H-1)

NOTE: **See TABLE 3282 for the references for the replacement procedure of permanent installed parts.**

More data for bonded parts are given in column SEE REPAIR TASK. Use the data for the selection of the related repair solution.

IPL FIG. ITEM	COMPONENT PART NAME	IPL FIG. ITEM	REPLACEMENT PART NAME	SEE REPAIR TASK
07H-001 07H-010	Housing Housing Assembly	07H-020	Scuff Plate	Replacement of the Bonded Parts Material No. 08-010A Epoxy Resin and Hardener Adhesive
07H-001	Housing	07H-140	Section	Replacement of the Bonded Parts Material No. 08-026 Adhesive/ Sealant one Part, RTV Silicone Rubber
07H-001	Housing	07H-150	Sealing Section	Replacement of the Bonded Parts Material No. 08-026 Adhesive/ Sealant one Part, RTV Silicone Rubber

Table 3282
Reference list for the replacement of permanent installed parts

07H-001	Housing	07H-160	Placard	Replacement of the Self-adhesive Placards self adhesive
07H-001	Housing	07H-170	Placard	Replacement of the Self-adhesive Placards self adhesive

Table 3282
Reference list for the replacement of permanent installed parts

(b) Remove the screws 07H-195, the nuts 07H-185 and the side wall decor panel assembly 07H-130 from the Z-angles 07H-180.

(c) Remove the screws 07H-240, the washers 07H-250 and the side wall decor panel assembly 07H-130 with the L-angles 07H-230 from the housing assembly 07H-010.

(d) Remove the screws 07H-280, the washers 07H-200 and the L-angle 07H-270 from the housing assembly 07H-010.

(e) Remove the screws 07H-280, the washers 07H-200 and the side wall decor panel assembly 07H-130 with the angles 07H-260 from the housing assembly 07H-010.

(f) Remove the screws 07H-280, the washers 07H-200, the angles 07H-260 and the L-angle 07H-270 from the side wall decor panel assembly 07H-130.

(g) Remove the screws 07H-240, the washers 07H-250 and the L-angles 07H-230 from the side wall decor panel assembly 07H-130.

(h) Remove the screws 07H-190, the washers 07H-200 and the Z-angles 07H-180 from the housing assembly 07H-010.

(i) Remove the screws 07H-220 and the bracket 07H-210 from the housing assembly 07H-010.

(j) Remove the screws 07H-050 and the fittings 07H-040.

TASK 25-41-51-000-805-K01
D2549010605200 D2549010606600 D2549010606800 D2549010607000 D2549010608400 D2549020502200 D2549020505600 D2549020509000 D2549020509600 D2549020511000 D2549020513000 D2549020701600 D2549020705800 D2549020713000 D2549020714400 D2549030503800 D2549030513200 D2549030600200 D2549030607200 D2549030607800 D2549030609000 D2549030611800 D2549030614200 D2549030614400 R225401168-000 R225401168-020 R225401613-000 R225401625-000

53. Removal of the Housing

A. General

A complete disassembly of the component is not necessary and not recommended.

Do not disassemble the component more than it is necessary for:

- Cleaning
- Visual Inspection
- Replacement of defective parts.

B. Job Set-up Information
(1) Consumable Materials

REFERENCE	DESIGNATION
08-010A	Epoxy Resin and Hardener Adhesive
08-026	Adhesive/Sealant one Part, RTV Silicone Rubber

Table 3283
Consumable Materials

C. Procedure

WARNING: **BE CAREFUL WHEN YOU USE SOLVENTS/CLEANING AGENTS, SEALANTS AND OTHER MATERIALS. OBEY THE MATERIAL MANUFACTURER'S INSTRUCTIONS AND THE LOCAL REGULATIONS. MAKE SURE THAT THERE IS A GOOD FLOW OF AIR THROUGH THE WORK AREA. DO NOT BREATHE THE FUMES. DO NOT SMOKE. DO NOT USE THESE MATERIALS NEAR A FLAME, SPARKS OR SOURCES OF HEAT. USE PROTECTIVE CLOTHING, GOGGLES AND GLOVES. IF YOU GET ONE OF THESE MATERIALS ON YOUR SKIN OR IN YOUR EYES, FLUSH IT AWAY WITH A FLOW OF CLEAN WATER. IF YOU GET ONE OF THESE MATERIALS IN YOUR MOUTH, GET IMMEDIATE MEDICAL AID. IN GENERAL, THESE MATERIALS ARE POISONOUS, FLAMMABLE AND SKIN IRRITANTS.**

CAUTION: **DO ALL THE WORK ON A CLEAN, SOFT SURFACE TO PREVENT DAMAGE TO THE COMPONENTS.**

SUB TASK 25-41-51-000-160-A01

D2549010605200 D2549010606600 D2549010606800 D2549010607000 D2549010608400 D2549020502200 D2549020505600 D2549020509000 D2549020509600 D2549020511000 D2549020513000 D2549020701600 D2549020705800 D2549020713000 D2549020714400 D2549030513200 D2549030600200 D2549030607200 D2549030607800 D2549030609000 D2549030611800 D2549030614200 D2549030614400 R225401168-000 R225401168-020 R225401613-000 R225401625-000

1. Removal of the Housing (07J-1)

NOTE: **See TABLE 3284 for the references for the replacement procedure of permanent installed parts.**

More data for bonded parts are given in column SEE REPAIR TASK. Use the data for the selection of the related repair solution.

IPL FIG. ITEM	COMPONENT PART NAME	IPL FIG. ITEM	REPLACEMENT PART NAME	SEE REPAIR TASK
07J-001 07J-010	Housing Housing Assembly	07J-020	Sliding Strip	Replacement of the Bonded Parts self adhesive

Table 3284
Reference list for the replacement of permanent installed parts

07J-001 07J-010	Housing Housing Assembly	07J-030	Sliding Strip	Replacement of the Bonded Parts self adhesive
07J-001 07J-010	Housing Housing Assembly	07J-040	Scuff Plate	Replacement of the Bonded Parts Material No. 08-010A Epoxy Resin and Hardener Adhesive
07J-001	Housing	07J-170	Section	Replacement of the Bonded Parts Material No. 08-026 Adhesive/ Sealant one Part, RTV Silicone Rubber
07J-001	Housing	07J-180	Sealing Section	Replacement of the Bonded Parts Material No. 08-026 Adhesive/ Sealant one Part, RTV Silicone Rubber
07J-001	Housing	07J-190	Placard	Replacement of the Self-adhesive Placards self adhesive
07J-001	Housing	07J-200	Placard	Replacement of the Self-adhesive Placards self adhesive

Table 3284
Reference list for the replacement of permanent installed parts

(b) Remove the screw 07J-210, the washer 07J-220 and the housing assembly 07J-010 from the lavatory structure.

(c) Remove the stud 07J-150 from the housing assembly 07J-010.

(d) Remove the glass mirror 07J-140 from the screws 07J-160.

(e) Remove the screws 07J-160 from the housing assembly 07J-010.

(f) Remove the screws 07J-070 and the fittings 07J-060.

SUB TASK 25-41-51-000-160-B01
D2549030503800

2. Removal of the Housing (07J-1)

NOTE: **See TABLE 3285 for the references for the replacement procedure of permanent installed parts.**

More data for bonded parts are given in column SEE REPAIR TASK. Use the data for the selection of the related repair solution.

IPL FIG. ITEM	COMPONENT PART NAME	IPL FIG. ITEM	REPLACEMENT PART NAME	SEE REPAIR TASK
07J-001 07J-010	Housing Housing Assembly	07J-020	Sliding Strip	Replacement of the Bonded Parts self adhesive
07J-001 07J-010	Housing Housing Assembly	07J-030	Sliding Strip	Replacement of the Bonded Parts self adhesive
07J-001 07J-010	Housing Housing Assembly	07J-040	Scuff Plate	Replacement of the Bonded Parts Material No. 08-010A Epoxy

Table 3285
Reference list for the replacement of permanent installed parts

				Resin and Hardener Adhesive
07J-001	Housing	07J-170	Section	Replacement of the Bonded Parts Material No. 08-026 Adhesive/ Sealant one Part, RTV Silicone Rubber
07J-001	Housing	07J-180	Sealing Section	Replacement of the Bonded Parts Material No. 08-026 Adhesive/ Sealant one Part, RTV Silicone Rubber
07J-001	Housing	07J-190	Placard	Replacement of the Self-adhesive Placards self adhesive
07J-001	Housing	07J-200	Placard	Replacement of the Self-adhesive Placards self adhesive

Table 3285
Reference list for the replacement of permanent installed parts

(b) Remove the screw 07J-210, the washer 07J-220 and the housing assembly 07J-010 from the lavatory structure.

(c) Remove the stud 07J-150 from the housing assembly 07J-010.

(d) Remove the glass mirror 07J-140 from the screws 07J-160.

(e) Remove the screws 07J-160 from the housing assembly 07J-010.

(f) Remove the bolts 07J-250 and the cosmetics holder 07J-230.

(g) Remove the screws 07J-070 and the fittings 07J-060.

TASK 25-41-51-000-805-L01

D2549010607200 D2549010608600 D2549010609000 D2549010609400 D2549020801000 D2549020802200 D2549020802600 D2549030608000 D2549030610600 D2549030611000 D2549030611200 D2549030611400 D2549030611600 D2549030612800 D2549030613200 D2549030613400 R225401134-012 R225401134-026 R225401134-028 R225401145-006 R225401172-016 R225401183-002 R225401614-000

54. Removal of the Housing

A. General

A complete disassembly of the component is not necessary and not recommended.

Do not disassemble the component more than it is necessary for:

- Cleaning
- Visual Inspection
- Replacement of defective parts.

B. Job Set-up Information
(1) Consumable Materials

REFERENCE	DESIGNATION
08-001	General Purpose Adhesive Honeycomb Filler
08-026	Adhesive/Sealant one Part, RTV Silicone Rubber

Table 3286
Consumable Materials

C. Procedure

WARNING: **BE CAREFUL WHEN YOU USE SOLVENTS/CLEANING AGENTS, SEALANTS AND OTHER MATERIALS. OBEY THE MATERIAL MANUFACTURER'S INSTRUCTIONS AND THE LOCAL REGULATIONS. MAKE SURE THAT THERE IS A GOOD FLOW OF AIR THROUGH THE WORK AREA. DO NOT BREATHE THE FUMES. DO NOT SMOKE. DO NOT USE THESE MATERIALS NEAR A FLAME, SPARKS OR SOURCES OF HEAT. USE PROTECTIVE CLOTHING, GOGGLES AND GLOVES. IF YOU GET ONE OF THESE MATERIALS ON YOUR SKIN OR IN YOUR EYES, FLUSH IT AWAY WITH A FLOW OF CLEAN WATER. IF YOU GET ONE OF THESE MATERIALS IN YOUR MOUTH, GET IMMEDIATE MEDICAL AID. IN GENERAL, THESE MATERIALS ARE POISONOUS, FLAMMABLE AND SKIN IRRITANTS.**

CAUTION: **DO ALL THE WORK ON A CLEAN, SOFT SURFACE TO PREVENT DAMAGE TO THE COMPONENTS.**

SUB TASK 25-41-51-000-162-A01

1. Removal of the Housing (07K-1)

NOTE: **See TABLE 3287 for the references for the replacement procedure of permanent installed parts.**

More data for bonded parts are given in column SEE REPAIR TASK. Use the data for the selection of the related repair solution.

IPL FIG. ITEM	COMPONENT PART NAME	IPL FIG. ITEM	REPLACEMENT PART NAME	SEE REPAIR TASK
07K-001 07K-010	Housing Housing Assembly	07K-020	Sliding Strip	Replacement of the Bonded Parts self adhesive
07K-001 07K-010	Housing Housing Assembly	07K-030	Sliding Strip	Replacement of the Bonded Parts self adhesive
07K-001 07K-010	Housing Housing Assembly	07K-040	Scuff Plate	Replacement of the Bonded Parts

Table 3287
Reference list for the replacement of permanent installed parts

				Material No. 08-001 General Purpose Adhesive Honeycomb Filler
07K-001	Housing	07K-160	Section	Replacement of the Bonded Parts Material No. 08-026 Adhesive/ Sealant one Part, RTV Silicone Rubber
07K-001	Housing	07K-170	Sealing Section	Replacement of the Bonded Parts Material No. 08-026 Adhesive/ Sealant one Part, RTV Silicone Rubber
07K-001	Housing	07K-180	Placard	Replacement of the Self-adhesive Placards self adhesive
07K-001	Housing	07K-190	Placard	Replacement of the Self-adhesive Placards self adhesive

Table 3287
Reference list for the replacement of permanent installed parts

(b) Remove the screws 07K-122, 07K-124, 07K-200, the washers 07K-126, 07K-128, 07K-210 and the housing assembly 07K-010 from the lavatory structure.

(c) Remove the stud 07K-140 from the housing assembly 07K-010.

(d) Remove the glass mirror 07K-130 from the screws 07K-150.

(e) Remove the screws 07K-150 from the housing assembly 07K-010.

(f) Remove the screws 07K-070 and the fittings 07K-060.

TASK 25-41-51-000-805-M01
D2549010607600 D2549010608800 D2549010609200 D2549010609600 D2549010609800 D2549010610200 D2549010610400 D2549020510400 D2549020510800 D2549020511200 D2549020511800 D2549020512400 D2549020513400 D2549020513600 D2549020514800 D2549020800800 D2549020801600 D2549020802000 D2549030400200 D2549030609800 D2549030613800 D2549030614600 R225401137-016 R225401145-008 R225401145-014 R225401168-002 R225401168-022 R225401172-018 R225401600-004 R225401605-002 R225401629-000 R225401629-002

55. Removal of the Housing

A. General

A complete disassembly of the component is not necessary and not recommended.

Do not disassemble the component more than it is necessary for:

- Cleaning
- Visual Inspection
- Replacement of defective parts.

B. Job Set-up Information
(1) Consumable Materials

REFERENCE	DESIGNATION
08-010A	Epoxy Resin and Hardener Adhesive
08-026	Adhesive/Sealant one Part, RTV Silicone Rubber

Table 3288
Consumable Materials

C. Procedure

WARNING: **BE CAREFUL WHEN YOU USE SOLVENTS/CLEANING AGENTS, SEALANTS AND OTHER MATERIALS. OBEY THE MATERIAL MANUFACTURER'S INSTRUCTIONS AND THE LOCAL REGULATIONS. MAKE SURE THAT THERE IS A GOOD FLOW OF AIR THROUGH THE WORK AREA. DO NOT BREATHE THE FUMES. DO NOT SMOKE. DO NOT USE THESE MATERIALS NEAR A FLAME, SPARKS OR SOURCES OF HEAT. USE PROTECTIVE CLOTHING, GOGGLES AND GLOVES. IF YOU GET ONE OF THESE MATERIALS ON YOUR SKIN OR IN YOUR EYES, FLUSH IT AWAY WITH A FLOW OF CLEAN WATER. IF YOU GET ONE OF THESE MATERIALS IN YOUR MOUTH, GET IMMEDIATE MEDICAL AID. IN GENERAL, THESE MATERIALS ARE POISONOUS, FLAMMABLE AND SKIN IRRITANTS.**

CAUTION: **DO ALL THE WORK ON A CLEAN, SOFT SURFACE TO PREVENT DAMAGE TO THE COMPONENTS.**

SUB TASK 25-41-51-000-163-A01

1. Removal of the Housing (07L-1)

NOTE: **See TABLE 3289 for the references for the replacement procedure of permanent installed parts.**

More data for bonded parts are given in column SEE REPAIR TASK. Use the data for the selection of the related repair solution.

IPL FIG. ITEM	COMPONENT PART NAME	IPL FIG. ITEM	REPLACEMENT PART NAME	SEE REPAIR TASK
07L-001 07L-010	Housing Housing Assembly	07L-020	Sliding Strip	Replacement of the Bonded Parts self adhesive
07L-001 07L-010	Housing Housing Assembly	07L-030	Sliding Strip	Replacement of the Bonded Parts self adhesive
07L-001 07L-010	Housing Housing Assembly	07L-040	Scuff Plate	Replacement of the Bonded Parts

Table 3289
Reference list for the replacement of permanent installed parts

				Material No. 08-010A Epoxy Resin and Hardener Adhesive
07L-001	Housing	07L-160	Section	Replacement of the Bonded Parts Material No. 08-026 Adhesive/ Sealant one Part, RTV Silicone Rubber
07L-001	Housing	07L-170	Sealing Section	Replacement of the Bonded Parts Material No. 08-026 Adhesive/ Sealant one Part, RTV Silicone Rubber
07L-001	Housing	07L-180	Placard	Replacement of the Self-adhesive Placards self adhesive
07L-001	Housing	07L-190	Placard	Replacement of the Self-adhesive Placards self adhesive

Table 3289
Reference list for the replacement of permanent installed parts

(b) Remove the screws 07L-122, 07L-124, 07L-200, the washers 07L-126, 07L-128, 07L-210 and the housing assembly 07L-010 from the lavatory structure.

(c) Remove the stud 07L-140 from the housing assembly 07L-010.

(d) Remove the glass mirror 07L-130 from the screws 07L-150.

(e) Remove the screws 07L-150 from the housing assembly 07L-010.

(f) Remove the screws 07L-070 and the fittings 07L-060.

TASK 25-41-51-000-805-N01
D2549020802800

56. Removal of the Housing

A. General

A complete disassembly of the component is not necessary and not recommended.

Do not disassemble the component more than it is necessary for:

- Cleaning
- Visual Inspection
- Replacement of defective parts.

B. Job Set-up Information
(1) Consumable Materials

REFERENCE	DESIGNATION
08-010A	Epoxy Resin and Hardener Adhesive
08-026	Adhesive/Sealant one Part, RTV Silicone Rubber

Table 3290
Consumable Materials

C. Procedure

WARNING: **BE CAREFUL WHEN YOU USE SOLVENTS/CLEANING AGENTS, SEALANTS AND OTHER MATERIALS. OBEY THE MATERIAL MANUFACTURER'S INSTRUCTIONS AND THE LOCAL REGULATIONS. MAKE SURE THAT THERE IS A GOOD FLOW OF AIR THROUGH THE WORK AREA. DO NOT BREATHE THE FUMES. DO NOT SMOKE. DO NOT USE THESE MATERIALS NEAR A FLAME, SPARKS OR SOURCES OF HEAT. USE PROTECTIVE CLOTHING, GOGGLES AND GLOVES. IF YOU GET ONE OF THESE MATERIALS ON YOUR SKIN OR IN YOUR EYES, FLUSH IT AWAY WITH A FLOW OF CLEAN WATER. IF YOU GET ONE OF THESE MATERIALS IN YOUR MOUTH, GET IMMEDIATE MEDICAL AID. IN GENERAL, THESE MATERIALS ARE POISONOUS, FLAMMABLE AND SKIN IRRITANTS.**

CAUTION: **DO ALL THE WORK ON A CLEAN, SOFT SURFACE TO PREVENT DAMAGE TO THE COMPONENTS.**

SUB TASK 25-41-51-000-165-A01
D2549020802800

1. Removal of the Housing (07M-1)

NOTE: **See TABLE 3291 for the references for the replacement procedure of permanent installed parts.**

More data for bonded parts are given in column SEE REPAIR TASK. Use the data for the selection of the related repair solution.

IPL FIG. ITEM	COMPONENT PART NAME	IPL FIG. ITEM	REPLACEMENT PART NAME	SEE REPAIR TASK
07M-001 07M-010	Housing Housing Assembly	07M-020	Sliding Strip	Replacement of the Bonded Parts self adhesive
07M-001 07M-010	Housing Housing Assembly	07M-030	Scuff Plate	Replacement of the Bonded Parts Material No. 08-010A Epoxy Resin and Hardener Adhesive
07M-001	Housing	07M-150	Section	Replacement of the Bonded Parts Material No. 08-026 Adhesive/ Sealant one Part, RTV Silicone Rubber
07M-001	Housing	07M-160	Sealing Section	Replacement of the Bonded Parts Material No. 08-026 Adhesive/

Table 3291
Reference list for the replacement of permanent installed parts

				Sealant one Part, RTV Silicone Rubber
07M-001	Housing	07M-170	Placard	Replacement of the Self-adhesive Placards self adhesive
07M-001	Housing	07M-180	Placard	Replacement of the Self-adhesive Placards self adhesive

Table 3291
Reference list for the replacement of permanent installed parts

(b) Remove the screws 07M-112, 07M-114, 07M-190, the washers 07M-116, 07M-118, 07M-200 and the housing assembly 07M-010 from the lavatory structure.

(c) Remove the stud 07M-130 from the housing assembly 07M-010.

(d) Remove the glass mirror 07M-120 from the screws 07M-140.

(e) Remove the screws 07M-140 from the housing assembly 07M-010.

(f) Remove the screws 07M-060 and the fittings 07M-050.

TASK 25-41-51-000-805-P01
D2549020510600 D2549020800400 D2549020800600 D2549020803200 D2549020803400 D2549020803800 D2549030403800 D2549030610000 D2549030610400 D2549030612000 D2549030612200 D2549030612400 D2549030614800 R225401172-000 R225401196-006 R225401196-038 R225401196-052 R225401199-004 R225401199-006 R225401611-010 R225401693-000

57. Removal of the Housing

A. General

A complete disassembly of the component is not necessary and not recommended.

Do not disassemble the component more than it is necessary for:

- Cleaning
- Visual Inspection
- Replacement of defective parts.

B. Job Set-up Information
(1) Consumable Materials

REFERENCE	DESIGNATION
08-010A	Epoxy Resin and Hardener Adhesive
08-026	Adhesive/Sealant one Part, RTV Silicone Rubber

Table 3292
Consumable Materials

C. Procedure

WARNING: **BE CAREFUL WHEN YOU USE SOLVENTS/CLEANING AGENTS, SEALANTS AND OTHER MATERIALS. OBEY THE MATERIAL MANUFACTURER'S INSTRUCTIONS AND THE LOCAL REGULATIONS. MAKE SURE THAT THERE IS A GOOD FLOW OF AIR THROUGH THE WORK AREA. DO NOT BREATHE THE FUMES. DO NOT SMOKE. DO NOT USE THESE MATERIALS NEAR A FLAME, SPARKS OR SOURCES OF HEAT. USE PROTECTIVE CLOTHING, GOGGLES AND GLOVES. IF YOU GET ONE OF THESE MATERIALS ON YOUR SKIN OR IN YOUR EYES, FLUSH IT AWAY WITH A FLOW OF CLEAN WATER. IF YOU GET ONE OF THESE MATERIALS IN YOUR MOUTH, GET IMMEDIATE MEDICAL AID. IN GENERAL, THESE MATERIALS ARE POISONOUS, FLAMMABLE AND SKIN IRRITANTS.**

CAUTION: **DO ALL THE WORK ON A CLEAN, SOFT SURFACE TO PREVENT DAMAGE TO THE COMPONENTS.**

SUB TASK 25-41-51-000-168-A01

D2549020800400 D2549020800600 D2549020803200 D2549020803400 D2549020803800 D2549030403800 D2549030610000 D2549030612000 D2549030612200 D2549030612400 D2549030614800 R225401172-000 R225401196-006 R225401196-038 R225401196-052 R225401199-004 R225401199-006 R225401611-010 R225401693-000

1. Removal of the Housing (07N-1)

NOTE: **See TABLE 3293 for the references for the replacement procedure of permanent installed parts.**

More data for bonded parts are given in column SEE REPAIR TASK. Use the data for the selection of the related repair solution.

IPL FIG. ITEM	COMPONENT PART NAME	IPL FIG. ITEM	REPLACEMENT PART NAME	SEE REPAIR TASK
07N-001 07N-010	Housing Housing Assembly	07N-020	Sliding Strip	Replacement of the Bonded Parts self adhesive
07N-001 07N-010	Housing	07N-030	Sliding Strip	Replacement of the Bonded Parts

Table 3293
Reference list for the replacement of permanent installed parts

	Housing Assembly			self adhesive
07N-001 07N-010	Housing Housing Assembly	07N-040	Scuff Plate	Replacement of the Bonded Parts Material No. 08-010A Epoxy Resin and Hardener Adhesive
07N-001	Housing	07N-200	Section	Replacement of the Bonded Parts Material No. 08-026 Adhesive/ Sealant one Part, RTV Silicone Rubber
07N-001	Housing	07N-210	Sealing Section	Replacement of the Bonded Parts Material No. 08-026 Adhesive/ Sealant one Part, RTV Silicone Rubber
07N-001	Housing	07N-220	Placard	Replacement of the Self-adhesive Placards self adhesive
07N-001	Housing	07N-230	Placard	Replacement of the Self-adhesive Placards self adhesive

Table 3293
Reference list for the replacement of permanent installed parts

(b) Remove the screws 07N-130, 07N-140, 07N-240, the washers 07N-150, 07N-160, 07N-250 and the housing assembly 07N-010 from the lavatory structure.

(c) Remove the stud 07N-180 from the housing assembly 07N-010.

(d) Remove the glass mirror 07N-170 from the screws 07N-190.

(e) Remove the screws 07N-190 from the housing assembly 07N-010.

(f) Remove the screws 07N-070 and the fittings 07N-060.

SUB TASK 25-41-51-000-168-B01
D2549020510600

2. Removal of the Housing (07N-1)

NOTE: **See TABLE 3294 for the references for the replacement procedure of permanent installed parts.**
More data for bonded parts are given in column SEE REPAIR TASK. Use the data for the selection of the related repair solution.

IPL FIG. ITEM	COMPONENT PART NAME	IPL FIG. ITEM	REPLACEMENT PART NAME	SEE REPAIR TASK
07N-001 07N-010	Housing Housing Assembly	07N-020	Sliding Strip	Replacement of the Bonded Parts self adhesive
07N-001 07N-010	Housing Housing Assembly	07N-030	Sliding Strip	Replacement of the Bonded Parts self adhesive
07N-001 07N-010	Housing Housing Assembly	07N-040	Scuff Plate	Replacement of the Bonded Parts Material No. 08-010A Epoxy Resin and Hardener Adhesive

Table 3294
Reference list for the replacement of permanent installed parts

07N-001	Housing	07N-200	Section	Replacement of the Bonded Parts Material No. 08-026 Adhesive/ Sealant one Part, RTV Silicone Rubber
07N-001	Housing	07N-210	Sealing Section	Replacement of the Bonded Parts Material No. 08-026 Adhesive/ Sealant one Part, RTV Silicone Rubber
07N-001	Housing	07N-220	Placard	Replacement of the Self-adhesive Placards self adhesive
07N-001	Housing	07N-230	Placard	Replacement of the Self-adhesive Placards self adhesive
07N-001	Housing	07N-260	Mirror Shading Foil	Replacement of the Bonded Parts self adhesive

Table 3294
Reference list for the replacement of permanent installed parts

(b) Remove the screws 07N-130, 07N-140, 07N-240, the washers 07N-150, 07N-160, 07N-250 and the housing assembly 07N-010 from the lavatory structure.

(c) Remove the stud 07N-180 from the housing assembly 07N-010.

(d) Remove the glass mirror 07N-170 from the screws 07N-190.

(e) Remove the screws 07N-190 from the housing assembly 07N-010.

(f) Remove the screws 07N-070 and the fittings 07N-060.

SUB TASK 25-41-51-000-168-C01
D2549030610400

3. Removal of the Housing (07N-1)

NOTE: **See TABLE 3295 for the references for the replacement procedure of permanent installed parts.**
More data for bonded parts are given in column SEE REPAIR TASK. Use the data for the selection of the related repair solution.

IPL FIG. ITEM	COMPONENT PART NAME	IPL FIG. ITEM	REPLACEMENT PART NAME	SEE REPAIR TASK
07N-001 07N-010	Housing Housing Assembly	07N-020	Sliding Strip	Replacement of the Bonded Parts self adhesive
07N-001 07N-010	Housing Housing Assembly	07N-030	Sliding Strip	Replacement of the Bonded Parts self adhesive
07N-001 07N-010	Housing Housing Assembly	07N-040	Scuff Plate	Replacement of the Bonded Parts Material No. 08-010A Epoxy Resin and Hardener Adhesive
07N-001	Housing	07N-200	Section	Replacement of the Bonded Parts Material No. 08-026 Adhesive/ Sealant one

Table 3295
Reference list for the replacement of permanent installed parts

				Part, RTV Silicone Rubber
07N-001	Housing	07N-210	Sealing Section	Replacement of the Bonded Parts Material No. 08-026 Adhesive/ Sealant one Part, RTV Silicone Rubber
07N-001	Housing	07N-220	Placard	Replacement of the Self-adhesive Placards self adhesive
07N-001	Housing	07N-230	Placard	Replacement of the Self-adhesive Placards self adhesive

Table 3295
Reference list for the replacement of permanent installed parts

(b) Remove the screws 07N-130, 07N-140, 07N-240, the washers 07N-150, 07N-160, 07N-250 and the housing assembly 07N-010 from the lavatory structure.

(c) Remove the stud 07N-180 from the housing assembly 07N-010.

(d) Remove the glass mirror 07N-170 from the screws 07N-190.

(e) Remove the screws 07N-190 from the housing assembly 07N-010.

(f) Remove the bolts 07N-320, the spacer 07N-310 and the cosmetics holder 07N-300.

(g) Remove the screws 07N-280, the washers 07N-290 and the soap dispenser holder 07N-270.

(h) Remove the screws 07N-070 and the fittings 07N-060.

TASK 25-41-51-000-805-Q01
D2549020800200 D2549020801200 D2549020803600 D2549030400000 D2549030400400

58. Removal of the Housing

A. General

A complete disassembly of the component is not necessary and not recommended.

Do not disassemble the component more than it is necessary for:

- Cleaning
- Visual Inspection
- Replacement of defective parts.

B. Job Set-up Information
(1) Consumable Materials

REFERENCE	DESIGNATION
08-010A	Epoxy Resin and Hardener Adhesive
08-026	Adhesive/Sealant one Part, RTV Silicone Rubber

Table 3296
Consumable Materials

C. Procedure

WARNING: **BE CAREFUL WHEN YOU USE SOLVENTS/CLEANING AGENTS, SEALANTS AND OTHER MATERIALS. OBEY THE MATERIAL MANUFACTURER'S INSTRUCTIONS AND THE LOCAL REGULATIONS. MAKE SURE THAT THERE IS A GOOD FLOW OF AIR THROUGH THE WORK AREA. DO NOT BREATHE THE FUMES. DO NOT SMOKE. DO NOT USE THESE MATERIALS NEAR A FLAME, SPARKS OR SOURCES OF HEAT. USE PROTECTIVE CLOTHING, GOGGLES AND GLOVES. IF YOU GET ONE OF THESE MATERIALS ON YOUR SKIN OR IN YOUR EYES, FLUSH IT AWAY WITH A FLOW OF CLEAN WATER. IF YOU GET ONE OF THESE MATERIALS IN YOUR MOUTH, GET IMMEDIATE MEDICAL AID. IN GENERAL, THESE MATERIALS ARE POISONOUS, FLAMMABLE AND SKIN IRRITANTS.**

CAUTION: **DO ALL THE WORK ON A CLEAN, SOFT SURFACE TO PREVENT DAMAGE TO THE COMPONENTS.**

SUB TASK 25-41-51-000-170-A01

1. Removal of the Housing (07P-1)

NOTE: **See TABLE 3297 for the references for the replacement procedure of permanent installed parts.**

More data for bonded parts are given in column SEE REPAIR TASK. Use the data for the selection of the related repair solution.

IPL FIG. ITEM	COMPONENT PART NAME	IPL FIG. ITEM	REPLACEMENT PART NAME	SEE REPAIR TASK
07P-001 07P-010	Housing Housing Assembly	07P-020	Sliding Strip	Replacement of the Bonded Parts self adhesive
07P-001 07P-010	Housing Housing Assembly	07P-030	Sliding Strip	Replacement of the Bonded Parts self adhesive
07P-001 07P-010	Housing Housing Assembly	07P-040	Scuff Plate	Replacement of the Bonded Parts Material No. 08-010A Epoxy Resin and Hardener Adhesive
07P-001	Housing	07P-200	Section	Replacement of the Bonded Parts Material No. 08-026 Adhesive/ Sealant one Part, RTV Silicone Rubber

Table 3297
Reference list for the replacement of permanent installed parts

07P-001	Housing	07P-210	Sealing Section	Replacement of the Bonded Parts Material No. 08-026 Adhesive/ Sealant one Part, RTV Silicone Rubber
07P-001	Housing	07P-220	Placard	Replacement of the Self-adhesive Placards self adhesive
07P-001	Housing	07P-230	Placard	Replacement of the Self-adhesive Placards self adhesive

Table 3297
Reference list for the replacement of permanent installed parts

(b) Remove the screws 07P-130, 07P-140, 07P-240, the washers 07P-150, 07P-160, 07P-250 and the housing assembly 07P-010 from the lavatory structure.

(c) Remove the stud 07P-180 from the housing assembly 07P-010.

(d) Remove the glass mirror 07P-170 from the screws 07P-190.

(e) Remove the screws 07P-190 from the housing assembly 07P-010.

(f) Remove the screws 07P-070 and the fittings 07P-060.

TASK 25-41-51-000-805-R01
D2549010611200 D2549010611600 D2549010612200 D2549020405200 D2549020802400 D2549020805600 D2549020806400 D2549020808400 D2549020809800 D2549020812000 D2549020814600 D2549030402600 D2549030402800 D2549030403400 D2549030403600 D2549030404400 D2549030603200 D2549030613600 R225401134-030 R225401192-002

59. Removal of the Housing

A. General

A complete disassembly of the component is not necessary and not recommended.

Do not disassemble the component more than it is necessary for:

- Cleaning
- Visual Inspection
- Replacement of defective parts.

B. Job Set-up Information
(1) Consumable Materials

REFERENCE	DESIGNATION
08-026	Adhesive/Sealant one Part, RTV Silicone Rubber
	FASTBOND 10 - Formica Bonding Rigid Vinyl

Table 3298
Consumable Materials

C. Procedure

WARNING: **BE CAREFUL WHEN YOU USE SOLVENTS/CLEANING AGENTS, SEALANTS AND OTHER MATERIALS. OBEY THE MATERIAL MANUFACTURER'S INSTRUCTIONS AND THE LOCAL REGULATIONS. MAKE SURE THAT THERE IS A GOOD FLOW OF AIR THROUGH THE WORK AREA. DO NOT BREATHE THE FUMES. DO NOT SMOKE. DO NOT USE THESE MATERIALS NEAR A FLAME, SPARKS OR SOURCES OF HEAT. USE PROTECTIVE CLOTHING, GOGGLES AND GLOVES. IF YOU GET ONE OF THESE MATERIALS ON YOUR SKIN OR IN YOUR EYES, FLUSH IT AWAY WITH A FLOW OF CLEAN WATER. IF YOU GET ONE OF THESE MATERIALS IN YOUR MOUTH, GET IMMEDIATE MEDICAL AID. IN GENERAL, THESE MATERIALS ARE POISONOUS, FLAMMABLE AND SKIN IRRITANTS.**

CAUTION: **DO ALL THE WORK ON A CLEAN, SOFT SURFACE TO PREVENT DAMAGE TO THE COMPONENTS.**

SUB TASK 25-41-51-000-172-A01
D2549010611200 D2549020405200 D2549020812000 D2549020814600

1. Removal of the Housing (07Q-1)

NOTE: **See TABLE 3299 for the references for the replacement procedure of permanent installed parts.**
More data for bonded parts are given in column SEE REPAIR TASK. Use the data for the selection of the related repair solution.

IPL FIG. ITEM	COMPONENT PART NAME	IPL FIG. ITEM	REPLACEMENT PART NAME	SEE REPAIR TASK
07Q-001 07Q-010	Housing Housing Assembly	07Q-020	Sliding Strip	Replacement of the Bonded Parts self adhesive
07Q-001 07Q-010	Housing Housing Assembly	07Q-030	Sliding Strip	Replacement of the Bonded Parts self adhesive
07Q-001	Housing	07Q-200	Section	Replacement of the Bonded Parts Material No. 08-026 Adhesive/ Sealant one Part, RTV Silicone Rubber
07Q-001	Housing	07Q-210	Sealing Section	Replacement of the Bonded Parts

Table 3299
Reference list for the replacement of permanent installed parts

				Material No. 08-026 Adhesive/ Sealant one Part, RTV Sili-cone Rubber
07Q-001	Housing	07Q-220	Placard	Replacement of the Self-adhe-sive Placards self adhesive
07Q-001	Housing	07Q-230	Placard	Replacement of the Self-adhe-sive Placards self adhesive

Table 3299
Reference list for the replacement of permanent installed parts

(b) Remove the screws 07Q-130, 07Q-140, 07Q-240, the washers 07Q-150, 07Q-160, 07Q-250 and the housing assembly 07Q-010 from the lavatory structure.

(c) Remove the stud 07Q-180 from the housing assembly 07Q-010.

(d) Remove the glass mirror 07Q-170 from the screws 07Q-190.

(e) Remove the screws 07Q-190 from the housing assembly 07Q-010.

(f) Remove the screws 07Q-270 and the decor covers 07Q-260, 07Q-261 from the housing assembly 07Q-010.

(g) Remove the screws 07Q-070 and the fittings 07Q-060.

SUB TASK 25-41-51-000-172-B01
D2549010611600 D2549010612200 D2549020802400 D2549020805600 D2549020806400 D2549020808400 D2549020809800 D2549030402600 D2549030402800 D2549030403400 D2549030403600 D2549030404400 D2549030603200 D2549030613600 R225401134-030 R225401192-002

2. Removal of the Housing (07Q-1)

NOTE: **See TABLE 3300 for the references for the replacement procedure of permanent installed parts.**

More data for bonded parts are given in column SEE REPAIR TASK. Use the data for the selection of the related repair solution.

IPL FIG. ITEM	COMPONENT PART NAME	IPL FIG. ITEM	REPLACEMENT PART NAME	SEE REPAIR TASK
07Q-001 07Q-010	Housing Housing Assembly	07Q-020	Sliding Strip	Replacement of the Bonded Parts self adhesive
07Q-001 07Q-010	Housing Housing Assembly	07Q-030	Sliding Strip	Replacement of the Bonded Parts self adhesive
07Q-001 07Q-010	Housing Housing Assembly	07Q-040	Scuff Plate	Replacement of the Bonded Parts Material No. 08-553 FAS-TBOND 10 - Formica Bonding Rigid Vinyl
07Q-001	Housing	07Q-200	Section	Replacement of the Bonded Parts Material No. 08-026 Adhesive/ Sealant one Part, RTV Silicone Rubber
07Q-001	Housing	07Q-210	Sealing Section	Replacement of the Bonded Parts Material No. 08-026 Adhesive/ Sealant one Part, RTV Silicone Rubber

Table 3300
Reference list for the replacement of permanent installed parts

07Q-001	Housing	07Q-220	Placard	Replacement of the Self-adhesive Placards self adhesive
07Q-001	Housing	07Q-230	Placard	Replacement of the Self-adhesive Placards self adhesive

Table 3300
Reference list for the replacement of permanent installed parts

(b) Remove the screws 07Q-130, 07Q-140, 07Q-240, the washers 07Q-150, 07Q-160, 07Q-250 and the housing assembly 07Q-010 from the lavatory structure.

(c) Remove the stud 07Q-180 from the housing assembly 07Q-010.

(d) Remove the glass mirror 07Q-170 from the screws 07Q-190.

(e) Remove the screws 07Q-190 from the housing assembly 07Q-010.

(f) Remove the screws 07Q-270 and the decor covers 07Q-260, 07Q-261 from the housing assembly 07Q-010.

(g) Remove the screws 07Q-070 and the fittings 07Q-060.

TASK 25-41-51-000-805-S01

D2549010611000 D2549010612000 D2549020714000 D2549020801400 D2549020806200 D2549020807000 D2549020807400 D2549020808600 D2549020808800 D2549020809000 D2549020809400 D2549020810200 D2549030401400 D2549030402000 D2549030402200 D2549030402400 D2549030403000 D2549030405200 D2549030405400 D2549030405600 D2549030606000 D2549030608400 D2549030612600 R225401134-032 R225401134-034 R225401168-008 R225401168-010 R225401168-012 R225401168-024 R225401168-026 R225401196-008 R225401196-044 R225401196-054 R225401199-002 R225401199-008 R225401609-000 R225401611-008 R225401622-000

60. Removal of the Housing

A. General

A complete disassembly of the component is not necessary and not recommended.

Do not disassemble the component more than it is necessary for:

- Cleaning
- Visual Inspection
- Replacement of defective parts.

B. Job Set-up Information
(1) Consumable Materials

REFERENCE	DESIGNATION
08-026	Adhesive/Sealant one Part, RTV Silicone Rubber
	FASTBOND 10 - Formica Bonding Rigid Vinyl

Table 3301
Consumable Materials

C. Procedure

WARNING: **BE CAREFUL WHEN YOU USE SOLVENTS/CLEANING AGENTS, SEALANTS AND OTHER MATERIALS. OBEY THE MATERIAL MANUFACTURER'S INSTRUCTIONS AND THE LOCAL REGULATIONS. MAKE SURE THAT THERE IS A GOOD FLOW OF AIR THROUGH THE WORK AREA. DO NOT BREATHE THE FUMES. DO NOT SMOKE. DO NOT USE THESE MATERIALS NEAR A FLAME, SPARKS OR SOURCES OF HEAT. USE PROTECTIVE CLOTHING, GOGGLES AND GLOVES. IF YOU GET ONE OF THESE MATERIALS ON YOUR SKIN OR IN YOUR EYES, FLUSH IT AWAY WITH A FLOW OF CLEAN WATER. IF YOU GET ONE OF THESE MATERIALS IN YOUR MOUTH, GET IMMEDIATE MEDICAL AID. IN GENERAL, THESE MATERIALS ARE POISONOUS, FLAMMABLE AND SKIN IRRITANTS.**

CAUTION: **DO ALL THE WORK ON A CLEAN, SOFT SURFACE TO PREVENT DAMAGE TO THE COMPONENTS.**

SUB TASK 25-41-51-000-174-A01

D2549010611000 D2549020806200 D2549020807400 D2549020808800 D2549030402000 D2549030402200 D2549030405200 D2549030405400 R225401134-032 R225401134-034 R225401168-010 R225401168-012 R225401168-026

1. Removal of the Housing (07R-1)

NOTE: **See TABLE 3302 for the references for the replacement procedure of permanent installed parts.**

More data for bonded parts are given in column SEE REPAIR TASK. Use the data for the selection of the related repair solution.

IPL FIG. ITEM	COMPONENT PART NAME	IPL FIG. ITEM	REPLACEMENT PART NAME	SEE REPAIR TASK
07R-001 07R-010	Housing Housing Assembly	07R-020	Sliding Strip	Replacement of the Bonded Parts self adhesive
07R-001 07R-010	Housing Housing Assembly	07R-030	Sliding Strip	Replacement of the Bonded Parts self adhesive

Table 3302
Reference list for the replacement of permanent installed parts

07R-001	Housing	07R-200	Section	Replacement of the Bonded Parts Material No. 08-026 Adhesive/ Sealant one Part, RTV Silicone Rubber
07R-001	Housing	07R-210	Sealing Section	Replacement of the Bonded Parts Material No. 08-026 Adhesive/ Sealant one Part, RTV Silicone Rubber
07R-001	Housing	07R-220	Placard	Replacement of the Self-adhesive Placards self adhesive
07R-001	Housing	07R-230	Placard	Replacement of the Self-adhesive Placards self adhesive

Table 3302
Reference list for the replacement of permanent installed parts

(b) Remove the screws 07R-130, 07R-140, 07R-240, the washers 07R-150, 07R-160, 07R-250 and the housing assembly 07R-010 from the lavatory structure.

(c) Remove the stud 07R-180 from the housing assembly 07R-010.

(d) Remove the glass mirror 07R-170 from the screws 07R-190.

(e) Remove the screws 07R-190 from the housing assembly 07R-010.

(f) Remove the screws 07R-270 and the decor covers 07R-260 from the housing assembly 07R-010.

(g) Remove the screws 07R-070 and the fittings 07R-060.

SUB TASK 25-41-51-000-174-B01
D2549010612000 D2549020714000 D2549020801400 D2549020807000 D2549020808600 D2549020809000 D2549020809400 D2549020810200 D2549030401400 D2549030402400 D2549030403000 D2549030405600 D2549030606000 D2549030608400 D2549030612600 R225401168-008 R225401168-024 R225401196-008 R225401196-044 R225401196-054 R225401199-002 R225401199-008 R225401609-000 R225401611-008 R225401622-000

2. Removal of the Housing (07R-1)

NOTE: **See TABLE 3303 for the references for the replacement procedure of permanent installed parts.**

More data for bonded parts are given in column SEE REPAIR TASK. Use the data for the selection of the related repair solution.

IPL FIG. ITEM	COMPONENT PART NAME	IPL FIG. ITEM	REPLACEMENT PART NAME	SEE REPAIR TASK
07R-001 07R-010	Housing Housing Assembly	07R-020	Sliding Strip	Replacement of the Bonded Parts self adhesive
07R-001 07R-010	Housing Housing Assembly	07R-030	Sliding Strip	Replacement of the Bonded Parts self adhesive
07R-001 07R-010	Housing Housing Assembly	07R-040	Scuff Plate	Replacement of the Bonded Parts Material No. 08-553 FAS-TBOND 10 - Formica Bonding Rigid Vinyl

Table 3303
Reference list for the replacement of permanent installed parts

07R-001	Housing	07R-200	Section	Replacement of the Bonded Parts Material No. 08-026 Adhesive/ Sealant one Part, RTV Silicone Rubber
07R-001	Housing	07R-210	Sealing Section	Replacement of the Bonded Parts Material No. 08-026 Adhesive/ Sealant one Part, RTV Silicone Rubber
07R-001	Housing	07R-220	Placard	Replacement of the Self-adhesive Placards self adhesive
07R-001	Housing	07R-230	Placard	Replacement of the Self-adhesive Placards self adhesive

Table 3303
Reference list for the replacement of permanent installed parts

(b) Remove the screws 07R-130, 07R-140, 07R-240, the washers 07R-150, 07R-160, 07R-250 and the housing assembly 07R-010 from the lavatory structure.

(c) Remove the stud 07R-180 from the housing assembly 07R-010.

(d) Remove the glass mirror 07R-170 from the screws 07R-190.

(e) Remove the screws 07R-190 from the housing assembly 07R-010.

(f) Remove the screws 07R-270 and the decor covers 07R-260 from the housing assembly 07R-010.

(g) Remove the screws 07R-070 and the fittings 07R-060.

TASK 25-41-51-000-805-T01

D2547161903000 D2549010610800 D2549010611800 D2549010612400 D2549010613200 D2549010613400 D2549020804000 D2549020804200 D2549020804800 D2549020805000 D2549020806000 D2549020806800 D2549020807600 D2549020808200 D2549020810000 D2549020810600 D2549020811400 D2549020811600 D2549020811800 D2549030400600 D2549030401000 D2549030401600 D2549030404200 D2549030404800 R225401145-010 R225401196-010 R225401196-012 R225401196-040 R225401196-056 R225401196-058 R225401199-000 R225401622-002 R225401646-000 R225401647-000 R225401648-000

61. Removal of the Housing

A. General

A complete disassembly of the component is not necessary and not recommended.

Do not disassemble the component more than it is necessary for:

- Cleaning
- Visual Inspection
- Replacement of defective parts.

B. Job Set-up Information
(1) Consumable Materials

REFERENCE	DESIGNATION
08-026	Adhesive/Sealant one Part, RTV Silicone Rubber

Table 3304
Consumable Materials

C. Procedure

WARNING: **BE CAREFUL WHEN YOU USE SOLVENTS/CLEANING AGENTS, SEALANTS AND OTHER MATERIALS. OBEY THE MATERIAL MANUFACTURER'S INSTRUCTIONS AND THE LOCAL REGULATIONS. MAKE SURE THAT THERE IS A GOOD FLOW OF AIR THROUGH THE WORK AREA. DO NOT BREATHE THE FUMES. DO NOT SMOKE. DO NOT USE THESE MATERIALS NEAR A FLAME, SPARKS OR SOURCES OF HEAT. USE PROTECTIVE CLOTHING, GOGGLES AND GLOVES. IF YOU GET ONE OF THESE MATERIALS ON YOUR SKIN OR IN YOUR EYES, FLUSH IT AWAY WITH A FLOW OF CLEAN WATER. IF YOU GET ONE OF THESE MATERIALS IN YOUR MOUTH, GET IMMEDIATE MEDICAL AID. IN GENERAL, THESE MATERIALS ARE POISONOUS, FLAMMABLE AND SKIN IRRITANTS.**

CAUTION: **DO ALL THE WORK ON A CLEAN, SOFT SURFACE TO PREVENT DAMAGE TO THE COMPONENTS.**

SUB TASK 25-41-51-000-176-A01

1. Removal of the Housing (07S-1)

NOTE: **See TABLE 3305 for the references for the replacement procedure of permanent installed parts.**

More data for bonded parts are given in column SEE REPAIR TASK/SPM REFERENCE. Use the data for the selection of the related repair solution.

IPL FIG. ITEM	COMPONENT PART NAME	IPL FIG. ITEM	REPLACEMENT PART NAME	SEE REPAIR TASK/ SPM REFERENCE
07S-001 07S-010	Housing Housing Assembly	07S-020	Sliding Strip	Replacement of the Bonded Parts self adhesive
07S-001 07S-010	Housing Housing Assembly	07S-030	Sliding Strip	Replacement of the Bonded Parts self adhesive
07S-001 07S-160	Housing	07S-163 07S-165	Mirror Mirror Door Panel	SPM 25-00-01

Table 3305
Reference list for the replacement of permanent installed parts

	Mirror Assembly	07S-167	Adhesive Film	
07S-001	Housing	07S-190	Section	Replacement of the Bonded Parts Material No. 08-026 Adhesive/ Sealant one Part, RTV Silicone Rubber
07S-001	Housing	07S-200	Sealing Section	Replacement of the Bonded Parts Material No. 08-026 Adhesive/ Sealant one Part, RTV Silicone Rubber
07S-001	Housing	07S-210	Placard	Replacement of the Self-adhesive Placards self adhesive
07S-001	Housing	07S-220	Placard	Replacement of the Self-adhesive Placards self adhesive

Table 3305
Reference list for the replacement of permanent installed parts

(b) Remove the screws 07S-120, 07S-130, 07S-230, the washers 07S-140, 07S-150, 07S-240 and the housing assembly 07S-010 from the lavatory structure.

(c) Remove the stud 07S-170 from the housing assembly 07S-010.

(d) Remove the mirror assembly 07S-160 from the screws 07S-180.

(e) Remove the screws 07S-180 from the housing assembly 07S-010.

(f) Remove the screws 07S-260 and the decor covers 07S-250 from the housing assembly 07S-010.

(g) Remove the screws 07S-060 and the fittings 07S-050.

TASK 25-41-51-000-805-U01

D2549010400400 D2549010403000 D2549010611400 D2549010613000 D2549010614200
D2549010614400 D2549010614800 D2549020400400 D2549020404200 D2549020404600
D2549020404800 D2549020405000 D2549020405400 D2549020405600 D2549020406200
D2549020805400 D2549020805800 D2549020806600 D2549020807800 D2549020810400
D2549020811200 D2549020812200 D2549020812800 D2549020813600 D2549020813800
D2549020814000 D2549020814200 D2549020814400 D2549030401200 D2549030401800
D2549030404000 D2549030405800 D2549030406000 D2549030406400 D2549030406800
D2549030407000 D2549030407400 D2549030407600 D2549030407800 R225401152-008
R225401196-014 R225401196-016 R225401196-060 R225401196-062 R225401199-010
R225401611-006 R225401611-012 R225401639-000 R225401639-002 R225401643-000
R225401643-002 R225401643-004 R225401648-002 R225401656-000 R225401656-002

62. Removal of the Housing

A. General

A complete disassembly of the component is not necessary and not recommended.

Do not disassemble the component more than it is necessary for:

- Cleaning
- Visual Inspection
- Replacement of defective parts.

B. Job Set-up Information
(1) Consumable Materials

REFERENCE	DESIGNATION
08-026	Adhesive/Sealant one Part, RTV Silicone Rubber

Table 3306
Consumable Materials

C. Procedure

WARNING: **BE CAREFUL WHEN YOU USE SOLVENTS/CLEANING AGENTS, SEALANTS AND OTHER MATERIALS. OBEY THE MATERIAL MANUFACTURER'S INSTRUCTIONS AND THE LOCAL REGULATIONS. MAKE SURE THAT THERE IS A GOOD FLOW OF AIR THROUGH THE WORK AREA. DO NOT BREATHE THE FUMES. DO NOT SMOKE. DO NOT USE THESE MATERIALS NEAR A FLAME, SPARKS OR SOURCES OF HEAT. USE PROTECTIVE CLOTHING, GOGGLES AND GLOVES. IF YOU GET ONE OF THESE MATERIALS ON YOUR SKIN OR IN YOUR EYES, FLUSH IT AWAY WITH A FLOW OF CLEAN WATER. IF YOU GET ONE OF THESE MATERIALS IN YOUR MOUTH, GET IMMEDIATE MEDICAL AID. IN GENERAL, THESE MATERIALS ARE POISONOUS, FLAMMABLE AND SKIN IRRITANTS.**

CAUTION: **DO ALL THE WORK ON A CLEAN, SOFT SURFACE TO PREVENT DAMAGE TO THE COMPONENTS.**

SUB TASK 25-41-51-000-178-A01

D2549010400400 D2549010403000 D2549010611400 D2549010613000 D2549010614200 D2549010614400 D2549010614800 D2549020400400 D2549020404200 D2549020404600 D2549020404800 D2549020405000 D2549020405400 D2549020405600 D2549020406200 D2549020805400 D2549020805800 D2549020806600 D2549020807800 D2549020810400 D2549020811200 D2549020812200 D2549020813600 D2549020813800 D2549020814000 D2549020814200 D2549020814400 D2549030401200 D2549030401800 D2549030404000 D2549030405800 D2549030406000 D2549030406400 D2549030406800 D2549030407000 D2549030407400 D2549030407600 D2549030407800 R225401152-008 R225401196-014 R225401196-016 R225401196-060 R225401196-062 R225401199-010 R225401611-006 R225401611-012 R225401639-000 R225401639-002 R225401643-000 R225401643-002 R225401643-004 R225401648-002 R225401656-000 R225401656-002

1. Removal of the Housing (07T-1)

NOTE: **See TABLE 3307 for the references for the replacement procedure of permanent installed parts.**

More data for bonded parts are given in column SEE REPAIR TASK/SPM REFERENCE. Use the data for the selection of the related repair solution.

IPL FIG. ITEM	COMPONENT PART NAME	IPL FIG. ITEM	REPLACEMENT PART NAME	SEE REPAIR TASK/ SPM REFERENCE
07T-001 07T-010	Housing Housing Assembly	07T-020	Sliding Strip	Replacement of the Bonded Parts self adhesive
07T-001 07T-010	Housing Housing Assembly	07T-030	Sliding Strip	Replacement of the Bonded Parts self adhesive
07T-001 07T-160	Housing Mirror Assembly	07T-163 07T-165 07T-167	Mirror Mirror Door Panel Adhesive Film	SPM 25-00-01
07T-001	Housing	07T-190	Section	Replacement of the Bonded Parts Material No. 08-026 Adhesive/ Sealant one Part, RTV Silicone Rubber
07T-001	Housing	07T-200	Sealing Section	Replacement of the Bonded Parts Material No. 08-026 Adhesive/ Sealant one Part, RTV Silicone Rubber

Table 3307
Reference list for the replacement of permanent installed parts

07T-001	Housing	07T-210	Placard	Replacement of the Self-adhesive Placards self adhesive
07T-001	Housing	07T-220	Placard	Replacement of the Self-adhesive Placards self adhesive

Table 3307
Reference list for the replacement of permanent installed parts

(b) Remove the screws 07T-120, 07T-130, 07T-230, the washers 07T-140, 07T-150, 07T-240 and the housing assembly 07T-010 from the lavatory structure.

(c) Remove the stud 07T-170 from the housing assembly 07T-010.

(d) Remove the mirror assembly 07T-160 from the screws 07T-180.

(e) Remove the screws 07T-180 from the housing assembly 07T-010.

(f) Remove the screws 07T-260 and the decor covers 07T-250 from the housing assembly 07T-010.

(g) Remove the screws 07T-060 and the fittings 07T-050.

SUB TASK 25-41-51-000-178-B01
D2549020812800

2. Removal of the Housing (07T-1)

NOTE: **See TABLE 3308 for the references for the replacement procedure of permanent installed parts.**

More data for bonded parts are given in column SEE REPAIR TASK/SPM REFERENCE. Use the data for the selection of the related repair solution.

IPL FIG. ITEM	COMPONENT PART NAME	IPL FIG. ITEM	REPLACEMENT PART NAME	SEE REPAIR TASK/ SPM REFERENCE
07T-001 07T-010	Housing Housing Assembly	07T-020	Sliding Strip	Replacement of the Bonded Parts self adhesive
07T-001 07T-010	Housing Housing Assembly	07T-030	Sliding Strip	Replacement of the Bonded Parts self adhesive
07T-001 07T-160	Housing Mirror Assembly	07T-163 07T-165 07T-167	Mirror Mirror Door Panel Adhesive Film	SPM 25-00-01
07T-001	Housing	07T-190	Section	Replacement of the Bonded Parts Material No. 08-026 Adhesive/ Sealant one Part, RTV Silicone Rubber
07T-001	Housing	07T-200	Sealing Section	Replacement of the Bonded Parts Material No. 08-026 Adhesive/ Sealant one Part, RTV Silicone Rubber

Table 3308
Reference list for the replacement of permanent installed parts

07T-001	Housing	07T-210	Placard	Replacement of the Self-adhesive Placards self adhesive
07T-001	Housing	07T-220	Placard	Replacement of the Self-adhesive Placards self adhesive

Table 3308
Reference list for the replacement of permanent installed parts

(b) Remove the screws 07T-120, 07T-130, 07T-230, the washers 07T-140, 07T-150, 07T-240 and the housing assembly 07T-010 from the lavatory structure.

(c) Remove the stud 07T-170 from the housing assembly 07T-010.

(d) Remove the mirror assembly 07T-160 from the screws 07T-180.

(e) Remove the screws 07T-180 from the housing assembly 07T-010.

(f) Remove the screws 07T-260 and the decor covers 07T-270, 07T-280 from the housing assembly 07T-010.

(g) Remove the screws 07T-060 and the fittings 07T-050.

TASK 25-41-51-000-805-V01

D2549010400200 D2549010400600 D2549010402000 D2549010402800 D2549010612600 D2549010613600 D2549010613800 D2549020404400 D2549020405800 D2549020410600 D2549020801800 D2549020810800 D2549020812400 D2549020813000 D2549020814800 D2549030404600 D2549030405000 D2549030407200 D2549030408000 D2549030410400 D2549030614000 D2549040500200 R225401134-036 R225401662-000 R225401662-002

63. Removal of the Housing

A. General

A complete disassembly of the component is not necessary and not recommended.

Do not disassemble the component more than it is necessary for:

- Cleaning
- Visual Inspection
- Replacement of defective parts.

B. Job Set-up Information
(1) Consumable Materials

REFERENCE	DESIGNATION
08-026	Adhesive/Sealant one Part, RTV Silicone Rubber

Table 3309
Consumable Materials

C. Procedure

WARNING: **BE CAREFUL WHEN YOU USE SOLVENTS/CLEANING AGENTS, SEALANTS AND OTHER MATERIALS. OBEY THE MATERIAL MANUFACTURER'S INSTRUCTIONS AND THE LOCAL REGULATIONS. MAKE SURE THAT THERE IS A GOOD FLOW OF AIR THROUGH THE WORK AREA. DO NOT BREATHE THE FUMES. DO NOT SMOKE. DO NOT USE THESE MATERIALS NEAR A FLAME, SPARKS OR SOURCES OF HEAT. USE PROTECTIVE CLOTHING, GOGGLES AND GLOVES. IF YOU GET ONE OF THESE MATERIALS ON YOUR SKIN OR IN YOUR EYES, FLUSH IT AWAY WITH A FLOW OF CLEAN WATER. IF YOU GET ONE OF THESE MATERIALS IN YOUR MOUTH, GET IMMEDIATE MEDICAL AID. IN GENERAL, THESE MATERIALS ARE POISONOUS, FLAMMABLE AND SKIN IRRITANTS.**

CAUTION: **DO ALL THE WORK ON A CLEAN, SOFT SURFACE TO PREVENT DAMAGE TO THE COMPONENTS.**

SUB TASK 25-41-51-000-179-A01

D2549010400200 D2549010400600 D2549010402000 D2549010402800
D2549010612600 D2549010613600 D2549010613800 D2549020404400
D2549020405800 D2549020410600 D2549020801800 D2549020810800
D2549020812400 D2549020813000 D2549020814800 D2549030404600
D2549030405000 D2549030407200 D2549030408000 D2549030410400
D2549040500200 R225401134-036 R225401662-000 R225401662-002

1. Removal of the Housing (07U-1)

NOTE: **See TABLE 3310 for the references for the replacement procedure of permanent installed parts.**

More data for bonded parts are given in column SEE REPAIR TASK. Use the data for the selection of the related repair solution.

IPL FIG. ITEM	COMPONENT PART NAME	IPL FIG. ITEM	REPLACEMENT PART NAME	SEE REPAIR TASK
07U-001 07U-010	Housing Housing Assembly	07U-020	Sliding Strip	Replacement of the Bonded Parts self adhesive
07U-001 07U-010	Housing Housing Assembly	07U-030	Sliding Strip	Replacement of the Bonded Parts self adhesive
07U-001	Housing	07U-190	Section	Replacement of the Bonded Parts Material No. 08-026 Adhesive/ Sealant one Part, RTV Silicone Rubber

Table 3310
Reference list for the replacement of permanent installed parts

07U-001	Housing	07U-200	Sealing Section	Replacement of the Bonded Parts Material No. 08-026 Adhesive/ Sealant one Part, RTV Silicone Rubber
07U-001	Housing	07U-210	Placard	Replacement of the Self-adhesive Placards self adhesive
07U-001	Housing	07U-220	Placard	Replacement of the Self-adhesive Placards self adhesive

Table 3310
Reference list for the replacement of permanent installed parts

(b) Remove the screws 07U-120, 07U-130, 07U-230, the washers 07U-140, 07U-150, 07U-240 and the housing assembly 07U-010 from the lavatory structure.

(c) Remove the stud 07U-170 from the housing assembly 07U-010.

(d) Remove the glass mirror 07U-160 from the screws 07U-180.

(e) Remove the screws 07U-180 from the housing assembly 07U-010.

(f) Remove the screws 07U-260 and the decor covers 07U-250 from the housing assembly 07U-010.

(g) Remove the screws 07U-060 and the fittings 07U-050.

(h) Remove the plug 07U-290.

SUB TASK 25-41-51-000-179-B01
D2549030614000

2. Removal of the Housing (07U-1)

NOTE: **See TABLE 3311 for the references for the replacement procedure of permanent installed parts.**

More data for bonded parts are given in column SEE REPAIR TASK. Use the data for the selection of the related repair solution.

IPL FIG. ITEM	COMPONENT PART NAME	IPL FIG. ITEM	REPLACEMENT PART NAME	SEE REPAIR TASK
07U-001 07U-010	Housing Housing Assembly	07U-020	Sliding Strip	Replacement of the Bonded Parts self adhesive
07U-001 07U-010	Housing Housing Assembly	07U-030	Sliding Strip	Replacement of the Bonded Parts self adhesive
07U-001	Housing	07U-190	Section	Replacement of the Bonded Parts Material No. 08-026 Adhesive/ Sealant one Part, RTV Silicone Rubber
07U-001	Housing	07U-200	Sealing Section	Replacement of the Bonded Parts Material No. 08-026 Adhesive/ Sealant one Part, RTV Silicone Rubber

Table 3311
Reference list for the replacement of permanent installed parts

07U-001	Housing	07U-210	Placard	Replacement of the Self-adhesive Placards self adhesive
07U-001	Housing	07U-220	Placard	Replacement of the Self-adhesive Placards self adhesive

Table 3311
Reference list for the replacement of permanent installed parts

(b) Remove the screws 07U-120, 07U-130, 07U-230, the washers 07U-140, 07U-150, 07U-240 and the housing assembly 07U-010 from the lavatory structure.

(c) Remove the stud 07U-170 from the housing assembly 07U-010.

(d) Remove the glass mirror 07U-160 from the screws 07U-180.

(e) Remove the screws 07U-180 from the housing assembly 07U-010.

(f) Remove the screws 07U-260 and the decor covers 07U-250 from the housing assembly 07U-010.

(g) Remove the bolts 07U-280 and the cosmetics holder 07U-270.

(h) Remove the screws 07U-060 and the fittings 07U-050.

TASK 25-41-51-000-805-W01

D2549010400000 D2549010400800 D2549010402600 D2549010614600 D2549020400000 D2549020400200 D2549020403800 D2549020513800 D2549020805200 D2549020812600 D2549020813200 D2549020813400 D2549030406600 D2549030408200 D2549030408400 D2549030409800 R225401136-004 R225401136-018 R225401658-000

64. Removal of the Housing

A. General

A complete disassembly of the component is not necessary and not recommended.

Do not disassemble the component more than it is necessary for:

- Cleaning
- Visual Inspection
- Replacement of defective parts.

B. Job Set-up Information
(1) Consumable Materials

REFERENCE	DESIGNATION
08-026	Adhesive/Sealant one Part, RTV Silicone Rubber

Table 3312
Consumable Materials

C. Procedure

WARNING: **BE CAREFUL WHEN YOU USE SOLVENTS/CLEANING AGENTS, SEALANTS AND OTHER MATERIALS. OBEY THE MATERIAL MANUFACTURER'S INSTRUCTIONS AND THE LOCAL REGULATIONS. MAKE SURE THAT THERE IS A GOOD FLOW OF AIR THROUGH THE WORK AREA. DO NOT BREATHE THE FUMES. DO NOT SMOKE. DO NOT USE THESE MATERIALS NEAR A FLAME, SPARKS OR SOURCES OF HEAT. USE PROTECTIVE CLOTHING, GOGGLES AND GLOVES. IF YOU GET ONE OF THESE MATERIALS ON YOUR SKIN OR IN YOUR EYES, FLUSH IT AWAY WITH A FLOW OF CLEAN WATER. IF YOU GET ONE OF THESE MATERIALS IN YOUR MOUTH, GET IMMEDIATE MEDICAL AID. IN GENERAL, THESE MATERIALS ARE POISONOUS, FLAMMABLE AND SKIN IRRITANTS.**

CAUTION: **DO ALL THE WORK ON A CLEAN, SOFT SURFACE TO PREVENT DAMAGE TO THE COMPONENTS.**

SUB TASK 25-41-51-000-180-A01

D2549010400800 D2549010614600 D2549020400000 D2549020400200
D2549020403800 D2549020513800 D2549020812600 D2549020813200
D2549020813400 D2549030406600 D2549030408200 D2549030408400
D2549030409800 R225401136-004 R225401136-018 R225401658-000

1. Removal of the Housing (07V-1)

NOTE: **See TABLE 3313 for the references for the replacement procedure of permanent installed parts.**

More data for bonded parts are given in column SEE REPAIR TASK. Use the data for the selection of the related repair solution.

IPL FIG. ITEM	COMPONENT PART NAME	IPL FIG. ITEM	REPLACEMENT PART NAME	SEE REPAIR TASK
07V-001 07V-010	Housing Housing Assembly	07V-020	Sliding Strip	Replacement of the Bonded Parts self adhesive
07V-001 07V-010	Housing Housing Assembly	07V-030	Sliding Strip	Replacement of the Bonded Parts self adhesive
07V-001	Housing	07V-200	Section	Replacement of the Bonded Parts Material No. 08-026 Adhesive/ Sealant one Part, RTV Silicone Rubber

Table 3313
Reference list for the replacement of permanent installed parts

07V-001	Housing	07V-210	Sealing Section	Replacement of the Bonded Parts Material No. 08-026 Adhesive/ Sealant one Part, RTV Silicone Rubber
07V-001	Housing	07V-220	Placard	Replacement of the Self-adhesive Placards self adhesive
07V-001	Housing	07V-230	Placard	Replacement of the Self-adhesive Placards self adhesive

Table 3313
Reference list for the replacement of permanent installed parts

(b) Remove the screws 07V-130, 07V-140, 07V-240, the washers 07V-150, 07V-160, 07V-250 and the housing assembly 07V-010 from the lavatory structure.

(c) Remove the stud 07V-180 from the housing assembly 07V-010.

(d) Remove the glass mirror 07V-170 from the screws 07V-190.

(e) Remove the screws 07V-190 from the housing assembly 07V-010.

(f) Remove the screws 07V-270 and the decor covers 07V-260 from the housing assembly 07V-010.

(g) Remove the screws 07V-060 and the fittings 07V-050.

SUB TASK 25-41-51-000-180-B01
D2549020805200

2. Removal of the Housing (07V-1)

NOTE: **See TABLE 3314 for the references for the replacement procedure of permanent installed parts.**

More data for bonded parts are given in column SEE REPAIR TASK. Use the data for the selection of the related repair solution.

IPL FIG. ITEM	COMPONENT PART NAME	IPL FIG. ITEM	REPLACEMENT PART NAME	SEE REPAIR TASK
07V-001 07V-010	Housing Housing Assembly	07V-020	Sliding Strip	Replacement of the Bonded Parts self adhesive
07V-001 07V-010	Housing Housing Assembly	07V-030	Sliding Strip	Replacement of the Bonded Parts self adhesive
07V-001	Housing	07V-175	Mirror Shading Foil	Replacement of the Bonded Parts self adhesive
07V-001	Housing	07V-200	Section	Replacement of the Bonded Parts Material No. 08-026 Adhesive/ Sealant one Part, RTV Silicone Rubber
07V-001	Housing	07V-210	Sealing Section	Replacement of the Bonded Parts Material No. 08-026 Adhesive/ Sealant one Part, RTV Silicone Rubber

Table 3314
Reference list for the replacement of permanent installed parts

07V-001	Housing	07V-220	Placard	Replacement of the Self-adhesive Placards self adhesive
07V-001	Housing	07V-230	Placard	Replacement of the Self-adhesive Placards self adhesive

Table 3314
Reference list for the replacement of permanent installed parts

(b) Remove the screws 07V-130, 07V-140, 07V-240, the washers 07V-150, 07V-160, 07V-250 and the housing assembly 07V-010 from the lavatory structure.

(c) Remove the stud 07V-180 from the housing assembly 07V-010.

(d) Remove the glass mirror 07V-170 from the screws 07V-190.

(e) Remove the screws 07V-190 from the housing assembly 07V-010.

(f) Remove the screws 07V-270 and the decor covers 07V-260 from the housing assembly 07V-010.

(g) Remove the screws 07V-060 and the fittings 07V-050.

SUB TASK 25-41-51-000-180-C01
D2549010400000 D2549010402600

3. Removal of the Housing (07V-1)

NOTE: **See TABLE 3315 for the references for the replacement procedure of permanent installed parts.**

More data for bonded parts are given in column SEE REPAIR TASK. Use the data for the selection of the related repair solution.

IPL FIG. ITEM	COMPONENT PART NAME	IPL FIG. ITEM	REPLACEMENT PART NAME	SEE REPAIR TASK
07V-001 07V-010	Housing Housing Assembly	07V-020	Sliding Strip	Replacement of the Bonded Parts self adhesive
07V-001 07V-010	Housing Housing Assembly	07V-030	Sliding Strip	Replacement of the Bonded Parts self adhesive
07V-001	Housing	07V-200	Section	Replacement of the Bonded Parts Material No. 08-026 Adhesive/ Sealant one Part, RTV Silicone Rubber
07V-001	Housing	07V-210	Sealing Section	Replacement of the Bonded Parts Material No. 08-026 Adhesive/ Sealant one Part, RTV Silicone Rubber
07V-001	Housing	07V-220	Placard	Replacement of the Self-adhesive Placards self adhesive
07V-001	Housing	07V-230	Placard	Replacement of the Self-adhesive Placards self adhesive

Table 3315
Reference list for the replacement of permanent installed parts

(b) Remove the screws 07V-130, 07V-140, 07V-240, the washers 07V-150, 07V-160, 07V-250 and the housing assembly 07V-010 from the lavatory structure.

(c) Remove the stud 07V-180 from the housing assembly 07V-010.

(d) Remove the glass mirror 07V-170 from the screws 07V-190.

(e) Remove the screws 07V-190 from the housing assembly 07V-010.

(f) Remove the screws 07V-270 and the decor covers 07V-280, 07V-290 from the housing assembly 07V-010.

(g) Remove the screws 07V-060 and the fittings 07V-050.

(h) Remove the protective film 07V-310 and the label 07V-300.

TASK 25-41-51-000-805-X01

D2547160900200 D2547160900400 D2549010403600 D2549010404200 D2549010406800
D2549020300000 D2549020300600 D2549020300800 D2549020301800 D2549020400600
D2549020400800 D2549020401200 D2549020402600 D2549020403400 D2549020404000
D2549020407000 D2549020407800 D2549020408600 D2549020409000 D2549020409600
D2549020409800 D2549020412600 D2549020414800 D2549020807200 D2549020809600
D2549030408600 D2549030409200 D2549030409600 D2549030410000 D2549030410200
D2549030411400 D2549030412400 D2549030412600 D2549030413200 D2549030413600
D2549030414000 D2549030700200 D2549030700400 D2549030704800 D2549040500600
R225401136-006 R225401136-012 R225401136-024 R225401152-010 R225401196-018
R225401196-020 R225401196-022 R225401196-042 R225401196-064 R225401196-066
R225401196-068 R225401199-012 R225401611-000 R225401611-014 R225401611-016
R225401611-018 R225401648-004 R225401648-006 R225401648-008 R225401671-000
R225401671-002 R225401673-000 R225401675-000 R225401688-000

65. Removal of the Housing

A. General

A complete disassembly of the component is not necessary and not recommended.

Do not disassemble the component more than it is necessary for:

- Cleaning
- Visual Inspection
- Replacement of defective parts.

B. Job Set-up Information
(1) Consumable Materials

REFERENCE	DESIGNATION
08-026	Adhesive/Sealant one Part, RTV Silicone Rubber

Table 3316
Consumable Materials

C. Procedure

WARNING: **BE CAREFUL WHEN YOU USE SOLVENTS/CLEANING AGENTS, SEALANTS AND OTHER MATERIALS. OBEY THE MATERIAL MANUFACTURER'S INSTRUCTIONS AND THE LOCAL REGULATIONS. MAKE SURE THAT THERE IS A GOOD FLOW OF AIR THROUGH THE WORK AREA. DO NOT BREATHE THE FUMES. DO NOT SMOKE. DO NOT USE THESE MATERIALS NEAR A FLAME, SPARKS OR SOURCES OF HEAT. USE PROTECTIVE CLOTHING, GOGGLES AND GLOVES. IF YOU GET ONE OF THESE MATERIALS ON YOUR SKIN OR IN YOUR EYES, FLUSH IT AWAY WITH A FLOW OF CLEAN WATER. IF YOU GET ONE OF THESE MATERIALS IN YOUR MOUTH, GET IMMEDIATE MEDICAL AID. IN GENERAL, THESE MATERIALS ARE POISONOUS, FLAMMABLE AND SKIN IRRITANTS.**

CAUTION: **DO ALL THE WORK ON A CLEAN, SOFT SURFACE TO PREVENT DAMAGE TO THE COMPONENTS.**

SUB TASK 25-41-51-000-181-A01

D2547160900200 D2549010403600 D2549010404200 D2549010406800 D2549020300000 D2549020300600 D2549020301800 D2549020400600 D2549020400800 D2549020401200 D2549020402600 D2549020403400 D2549020404000 D2549020407000 D2549020407800 D2549020408600 D2549020409000 D2549020409800 D2549020412600 D2549020414800 D2549020809600 D2549030408600 D2549030409200 D2549030409600 D2549030410000 D2549030410200 D2549030411400 D2549030412400 D2549030412600 D2549030413200 D2549030413600 D2549030414000 D2549030700200 D2549030700400 D2549030704800 D2549040500600 R225401136-006 R225401136-012 R225401136-024 R225401152-010 R225401196-018 R225401196-020 R225401196-022 R225401196-042 R225401196-064 R225401196-066 R225401196-068 R225401199-012 R225401611-000 R225401611-014 R225401611-016 R225401611-018 R225401648-004 R225401648-006 R225401648-008 R225401671-000 R225401671-002 R225401673-000 R225401675-000 R225401688-000

1. Removal of the Housing (07W-1)

NOTE: **See TABLE 3317 for the references for the replacement procedure of permanent installed parts.**

More data for bonded parts are given in column SEE REPAIR TASK/ SPM REFERENCE. Use the data for the selection of the related repair solution.

IPL FIG. ITEM	COMPONENT PART NAME	IPL FIG. ITEM	REPLACEMENT PART NAME	SEE REPAIR TASK/ SPM REFERENCE
07W-001 07W-010	Housing Housing Assembly	07W-020	Sliding Strip	Replacement of the Bonded Parts self adhesive
07W-001 07W-010	Housing Housing Assembly	07W-030	Sliding Strip	Replacement of the Bonded Parts self adhesive
07W-001 07W-170	Housing Mirror Assembly	07W-173 07W-175 07W-177	Mirror Mirror Door Panel Adhesive Film	SPM 25-00-01
07W-001	Housing	07W-200	Section	Replacement of the Bonded Parts Material No. 08-026 Adhesive/ Sealant one Part, RTV Silicone Rubber
07W-001	Housing	07W-210	Sealing Section	Replacement of the Bonded Parts Material No. 08-026 Adhesive/ Sealant one Part, RTV Silicone Rubber

Table 3317
Reference list for the replacement of permanent installed parts

07W-001	Housing	07W-220	Placard	Replacement of the Self-adhesive Placards self adhesive
07W-001	Housing	07W-230	Placard	Replacement of the Self-adhesive Placards self adhesive

Table 3317
Reference list for the replacement of permanent installed parts

(b) Remove the upper fitting assembly 07W-125 as follows:

1 Remove the screws 07W-130, 07W-240, the washers 07W-150, 07W-250 and the upper fitting 07W-127 from the housing assembly 07W-010.

(c) Remove the screws 07W-140, the washers 07W-160 and the housing assembly 07W-010 from the lavatory structure.

(d) Remove the stud 07W-180 from the housing assembly 07W-010.

(e) Remove the mirror assembly 07W-170 from the screws 07W-190.

(f) Remove the screws 07W-190 from the housing assembly 07W-010.

(g) Remove the screws 07W-270 and the decor covers 07W-260 from the housing assembly 07W-010.

(h) Remove the screws 07W-060 and the fittings 07W-050.

SUB TASK 25-41-51-000-181-B01
D2547160900400 D2549020300800 D2549020409600

2. Removal of the Housing (07W-1)

NOTE: See TABLE 3318 for the references for the replacement procedure of permanent installed parts.

More data for bonded parts are given in column SEE REPAIR TASK/SPM REFERENCE. Use the data for the selection of the related repair solution.

IPL FIG. ITEM	COMPONENT PART NAME	IPL FIG. ITEM	REPLACEMENT PART NAME	SEE REPAIR TASK/ SPM REFERENCE
07W-001 07W-010	Housing Housing Assembly	07W-020	Sliding Strip	Replacement of the Bonded Parts self adhesive
07W-001 07W-010	Housing Housing Assembly	07W-030	Sliding Strip	Replacement of the Bonded Parts self adhesive
07W-001 07W-170	Housing Mirror Assembly	07W-173 07W-175 07W-177	Mirror Mirror Door Panel Adhesive Film	SPM 25-00-01
07W-001	Housing	07W-200	Section	Replacement of the Bonded Parts Material No. 08-026 Adhesive/ Sealant one Part, RTV Silicone Rubber
07W-001	Housing	07W-210	Sealing Section	Replacement of the Bonded Parts Material No. 08-026 Adhesive/ Sealant one Part, RTV Silicone Rubber

Table 3318
Reference list for the replacement of permanent installed parts

07W-001	Housing	07W-220	Placard	Replacement of the Self-adhesive Placards self adhesive
07W-001	Housing	07W-230	Placard	Replacement of the Self-adhesive Placards self adhesive

Table 3318
Reference list for the replacement of permanent installed parts

(b) Remove the upper fitting assembly 07W-125 as follows:

1 Remove the screws 07W-130, 07W-240, the washers 07W-150, 07W-250 and the upper fitting 07W-127 from the housing assembly 07W-010.

(c) Remove the screws 07W-140, the washers 07W-160 and the housing assembly 07W-010 from the lavatory structure.

(d) Remove the stud 07W-180 from the housing assembly 07W-010.

(e) Remove the mirror assembly 07W-170 from the screws 07W-190.

(f) Remove the screws 07W-190 from the housing assembly 07W-010.

(g) Remove the screws 07W-270 and the decor covers 07W-340, 07W-350 from the housing assembly 07W-010.

(h) Remove the screws 07W-060 and the fittings 07W-050.

SUB TASK 25-41-51-000-181-C01
D2549020807200

3. Removal of the Housing (07W-1)

NOTE: **See TABLE 3319 for the references for the replacement procedure of permanent installed parts.**

More data for bonded parts are given in column SEE REPAIR TASK/SPM REFERENCE. Use the data for the selection of the related repair solution.

IPL FIG. ITEM	COMPONENT PART NAME	IPL FIG. ITEM	REPLACEMENT PART NAME	SEE REPAIR TASK/ SPM REFERENCE
07W-001 07W-010	Housing Housing Assembly	07W-020	Sliding Strip	Replacement of the Bonded Parts self adhesive
07W-001 07W-010	Housing Housing Assembly	07W-030	Sliding Strip	Replacement of the Bonded Parts self adhesive
07W-001 07W-170	Housing Mirror Assembly	07W-173 07W-175 07W-177	Mirror Mirror Door Panel Adhesive Film	SPM 25-00-01
07W-001	Housing	07W-200	Section	Replacement of the Bonded Parts Material No. 08-026 Adhesive/ Sealant one Part, RTV Silicone Rubber
07W-001	Housing	07W-210	Sealing Section	Replacement of the Bonded Parts Material No. 08-026 Adhesive/ Sealant one Part, RTV Silicone Rubber
07W-001	Housing	07W-220	Placard	Replacement of the Self-adhesive Placards

Table 3319
Reference list for the replacement of permanent installed parts

				self adhesive
07W-001	Housing	07W-230	Placard	Replacement of the Self-adhesive Placards self adhesive
07W-001	Housing	07W-360	Placard	Replacement of the Self-adhesive Placards self adhesive

Table 3319
Reference list for the replacement of permanent installed parts

(b) Remove the upper fitting assembly 07W-125 as follows:

1 Remove the screws 07W-130, 07W-240, the washers 07W-150, 07W-250 and the upper fitting 07W-127 from the housing assembly 07W-010.

(c) Remove the screws 07W-140, the washers 07W-160 and the housing assembly 07W-010 from the lavatory structure.

(d) Remove the stud 07W-180 from the housing assembly 07W-010.

(e) Remove the mirror assembly 07W-170 from the screws 07W-190.

(f) Remove the screws 07W-190 from the housing assembly 07W-010.

(g) Remove the screws 07W-270 and the decor covers 07W-260 from the housing assembly 07W-010.

(h) Remove the screws 07W-330, the spacer 07W-320 and the cosmetics holder 07W-310.

(i) Remove the screws 07W-290, the washers 07W-300 and the soap dispenser holder 07W-280.

(j) Remove the screws 07W-060 and the fittings 07W-050.

TASK 25-41-51-000-805-Y01

D2549010401000 D2549010401400 D2549010401800 D2549010402200 D2549010403400
D2549010404000 D2549010404400 D2549010405400 D2549010406000 D2549010406200
D2549020401000 D2549020402200 D2549020403000 D2549020403200 D2549020403600
D2549020406000 D2549020406400 D2549020406600 D2549020407200 D2549020407400
D2549020410800 D2549030409000 D2549030409400 D2549030411200 D2549030412000
D2549030412800 D2549030413000 D2549030414400 D2549030700000 D2549030701200
D2549030701400 D2549030703800 D2549030705200 D2549040500400 D2549040500800
D2549040501000 D2549040501200 D2549040501600 D2549040501800 D2549040502000
R225401134-014 R225401134-038 R225401611-020 R225401643-006 R225401643-008
R225401649-000 R225401673-002 R225401673-004 R225401676-000 R225401689-004
R225401689-006 R225401691-000 R225401697-000 R225401697-002 R225401803-000
R225401803-002

66. Removal of the Housing

A. General

A complete disassembly of the component is not necessary and not recommended.

Do not disassemble the component more than it is necessary for:

- Cleaning
- Visual Inspection
- Replacement of defective parts.

B. Job Set-up Information
(1) Consumable Materials

REFERENCE	DESIGNATION
08-026	Adhesive/Sealant one Part, RTV Silicone Rubber

Table 3320
Consumable Materials

C. Procedure

WARNING: **BE CAREFUL WHEN YOU USE SOLVENTS/CLEANING AGENTS, SEALANTS AND OTHER MATERIALS. OBEY THE MATERIAL MANUFACTURER'S INSTRUCTIONS AND THE LOCAL REGULATIONS. MAKE SURE THAT THERE IS A GOOD FLOW OF AIR THROUGH THE WORK AREA. DO NOT BREATHE THE FUMES. DO NOT SMOKE. DO NOT USE THESE MATERIALS NEAR A FLAME, SPARKS OR SOURCES OF HEAT. USE PROTECTIVE CLOTHING, GOGGLES AND GLOVES. IF YOU GET ONE OF THESE MATERIALS ON YOUR SKIN OR IN YOUR EYES, FLUSH IT AWAY WITH A FLOW OF CLEAN WATER. IF YOU GET ONE OF THESE MATERIALS IN YOUR MOUTH, GET IMMEDIATE MEDICAL AID. IN GENERAL, THESE MATERIALS ARE POISONOUS, FLAMMABLE AND SKIN IRRITANTS.**

CAUTION: **DO ALL THE WORK ON A CLEAN, SOFT SURFACE TO PREVENT DAMAGE TO THE COMPONENTS.**

SUB TASK 25-41-51-000-182-A01

D2549010401000 D2549010401800 D2549010402200 D2549010403400 D2549010404000 D2549010405400 D2549010406000 D2549020401000 D2549020402200 D2549020403000 D2549020403200 D2549020403600 D2549020406000 D2549020406400 D2549020406600 D2549020407200 D2549020407400 D2549020410800 D2549030409000 D2549030409400 D2549030411200 D2549030412000 D2549030412800 D2549030413000 D2549030700000 D2549030701200 D2549030701400 D2549030703800 D2549030705200 D2549040500400 D2549040500800 D2549040501000 D2549040501200 D2549040501600 D2549040501800 D2549040502000 R225401134-014 R225401134-038 R225401611-020 R225401643-006 R225401643-008 R225401649-000 R225401673-002 R225401673-004 R225401676-000 R225401689-004 R225401689-006 R225401691-000 R225401697-000 R225401697-002 R225401803-000 R225401803-002

1. Removal of the Housing (07X-1)

NOTE: **See TABLE 3321 for the references for the replacement procedure of permanent installed parts.**

More data for bonded parts are given in column SEE REPAIR TASK. Use the data for the selection of the related repair solution.

IPL FIG. ITEM	COMPONENT PART NAME	IPL FIG. ITEM	REPLACEMENT PART NAME	SEE REPAIR TASK
07X-001 07X-010	Housing Housing Assembly	07X-020	Sliding Strip	Replacement of the Bonded Parts self adhesive
07X-001 07X-010	Housing Housing Assembly	07X-030	Sliding Strip	Replacement of the Bonded Parts self adhesive
07X-001	Housing	07X-200	Section	Replacement of the Bonded Parts Material No. 08-026 Adhesive/ Sealant one Part, RTV Silicone Rubber
07X-001	Housing	07X-210	Sealing Section	Replacement of the Bonded Parts Material No. 08-026 Adhesive/ Sealant one Part, RTV Silicone Rubber
07X-001	Housing	07X-220	Placard	Replacement of the Self-adhesive Placards self adhesive
07X-001	Housing	07X-230	Placard	Replacement of the Self-adhesive Placards self adhesive

Table 3321
Reference list for the replacement of permanent installed parts

(b) Remove the screws 07X-130, 07X-140, 07X-240, the washers 07X-150, 07X-160, 07X-250 and the housing assembly 07X-010 from the lavatory structure.

(c) Remove the stud 07X-180 from the housing assembly 07X-010.

(d) Remove the glass mirror 07X-170 from the screws 07X-190.

(e) Remove the screws 07X-190 from the housing assembly 07X-010.

(f) Remove the screws 07X-270 and the decor covers 07X-260 from the housing assembly 07X-010.

(g) Remove the screws 07X-060 and the fittings 07X-050.

SUB TASK 25-41-51-000-182-B01
D2549010401400 D2549010404400 D2549010406200 D2549030414400

2. Removal of the Housing (07X-1)

NOTE: **See TABLE 3322 for the references for the replacement procedure of permanent installed parts.**

More data for bonded parts are given in column SEE REPAIR TASK. Use the data for the selection of the related repair solution.

IPL FIG. ITEM	COMPONENT PART NAME	IPL FIG. ITEM	REPLACEMENT PART NAME	SEE REPAIR TASK
07X-001	Housing	07X-200	Section	Replacement of the Bonded Parts Material No. 08-026 Adhesive/ Sealant one Part, RTV Silicone Rubber
07X-001	Housing	07X-210	Sealing Section	Replacement of the Bonded Parts

Table 3322
Reference list for the replacement of permanent installed parts

				Material No. 08-026 Adhesive/ Sealant one Part, RTV Silicone Rubber
07X-001	Housing	07X-220	Placard	Replacement of the Self-adhesive Placards self adhesive
07X-001	Housing	07X-230	Placard	Replacement of the Self-adhesive Placards self adhesive

Table 3322
Reference list for the replacement of permanent installed parts

(b) Remove the screw 07X-240, the washer 07X-250 and the housing 07X-001 from the lavatory structure.

(c) Remove the stud 07X-180 from the housing 07X-001.

(d) Remove the glass mirror 07X-170 from the screws 07X-190.

(e) Remove the screws 07X-190 from the housing 07X-001.

(f) Remove the screws 07X-270 and the decor covers 07X-280, 07X-290 from the housing 07X-001.

TASK 25-41-51-000-805-Z01

D2549010401600 D2549010402400 D2549010403200 D2549010403800 D2549010404600
D2549010404800 D2549010405000 D2549010405200 D2549010405600 D2549010405800
D2549010406400 D2549010407000 D2549010504400 D2549010504800 D2549010505400
D2549010507400 D2549010508200 D2549010508600 D2549010509600 D2549010510600
D2549010511800 D2549010513000 D2549010514200 D2549010514600 D2549010603000
D2549010603400 D2549010604400 D2549010610000 D2549010610600 D2549020300400
D2549020301000 D2549020301600 D2549020302000 D2549020302800 D2549020401400
D2549020401600 D2549020402400 D2549020406800 D2549020407600 D2549020408000
D2549020408200 D2549020408800 D2549020409200 D2549020409400 D2549020410200
D2549020410400 D2549020411000 D2549020411200 D2549020411400 D2549020411600
D2549020411800 D2549020412000 D2549020412200 D2549020412400 D2549020412800
D2549020413000 D2549020413200 D2549020413400 D2549020413600 D2549020413800
D2549020414000 D2549020414200 D2549020414600 D2549020503600 D2549020504600
D2549020510000 D2549020511600 D2549020513200 D2549020514400 D2549020601000
D2549020601400 D2549020601600 D2549020602400 D2549020603000 D2549020603200
D2549020604800 D2549020605200 D2549020606000 D2549020606400 D2549020606800
D2549020607000 D2549020607800 D2549020608800 D2549020609600 D2549020611800
D2549020613200 D2549020614800 D2549020700400 D2549020700600 D2549020701200
D2549020705600 D2549020706000 D2549020706400 D2549020707800 D2549020708800
D2549020709200 D2549020711600 D2549020713400 D2549020800000 D2549020803000
D2549020804400 D2549030410600 D2549030410800 D2549030411600 D2549030411800
D2549030412200 D2549030413400 D2549030414200 D2549030414600 D2549030414800
D2549030500400 D2549030501000 D2549030501200 D2549030503400 D2549030503600
D2549030504200 D2549030507000 D2549030508200 D2549030512400 D2549030601000
D2549030602600 D2549030605000 D2549030700600 D2549030700800 D2549030701000
D2549030701600 D2549030701800 D2549030702000 D2549030702200 D2549030702400
D2549030702600 D2549030702800 D2549030703000 D2549030703200 D2549030703400
D2549030703600 D2549030704000 D2549030704200 D2549030704400 D2549030704600
D2549030705600 D2549040501400 R225401133-000 R225401136-008 R225401136-014
R225401139-000 R225401145-000 R225401145-002 R225401145-012 R225401159-000
R225401172-002 R225401172-004 R225401172-010 R225401183-004 R225401183-006
R225401188-000 R225401188-002 R225401192-000 R225401196-024 R225401196-070
R225401602-000 R225401619-000 R225401624-000 R225401627-000 R225401627-002
R225401627-004 R225401646-002 R225401673-006 R225401683-000 R225401685-000
R225401685-002 R225401691-002 R225401808-000 R225401811-000 R225401814-000

67. Removal of the Housing

A. General

A complete disassembly of the component is not necessary and not recommended.

Do not disassemble the component more than it is necessary for:

- Cleaning
- Visual Inspection
- Replacement of defective parts.

B. Job Set-up Information
(1) Consumable Materials

REFERENCE	DESIGNATION
08-026	Adhesive/Sealant one Part, RTV Silicone Rubber
08-004	Adhesive Sealant

Table 3323
Consumable Materials

C. Procedure

WARNING: **BE CAREFUL WHEN YOU USE SOLVENTS/CLEANING AGENTS, SEALANTS AND OTHER MATERIALS. OBEY THE MATERIAL MANUFACTURER'S INSTRUCTIONS AND THE LOCAL REGULATIONS. MAKE SURE THAT THERE IS A GOOD FLOW OF AIR THROUGH THE WORK AREA. DO NOT BREATHE THE FUMES. DO NOT SMOKE. DO NOT USE THESE MATERIALS NEAR A FLAME, SPARKS OR SOURCES OF HEAT. USE PROTECTIVE CLOTHING, GOGGLES AND GLOVES. IF YOU GET ONE OF THESE MATERIALS ON YOUR SKIN OR IN YOUR EYES, FLUSH IT AWAY WITH A FLOW OF CLEAN WATER. IF YOU GET ONE OF THESE MATERIALS IN YOUR MOUTH, GET IMMEDIATE MEDICAL AID. IN GENERAL, THESE MATERIALS ARE POISONOUS, FLAMMABLE AND SKIN IRRITANTS.**

CAUTION: **DO ALL THE WORK ON A CLEAN, SOFT SURFACE TO PREVENT DAMAGE TO THE COMPONENTS.**

SUB TASK 25-41-51-010-100-A01
D2549010504400 D2549010505400 D2549010507400 D2549010508200
D2549010508600 D2549010509600 D2549010510600 D2549010511800
D2549010513000 D2549010514600 D2549010603000 D2549010603400
D2549010604400 D2549010610000 D2549020510000 D2549020511600
D2549020514400 D2549020602400 D2549020603000 D2549020603200
D2549020604800 D2549020605200 D2549020606400 D2549020606800
D2549020607000 D2549020607800 D2549020609600 D2549020611800
D2549020613200 D2549020614800 D2549020700400 D2549020700600
D2549020701200 D2549020705600 D2549020706000 D2549020709200
D2549020711600 D2549020713400 D2549020800000 D2549020803000

D2549030500400 D2549030501000 D2549030501200 D2549030503400 D2549030503600 D2549030504200 D2549030507000 D2549030508200 D2549030512400 D2549030601000 D2549030602600 D2549030605000 R225401139-000 R225401145-000 R225401145-002 R225401145-012 R225401159-000 R225401172-002 R225401172-004 R225401172-010 R225401188-000 R225401188-002 R225401192-000 R225401619-000

1. Removal of the Housing (07Y-1)

NOTE: **See TABLE 3324 for the references for the replacement procedure of permanent installed parts.**

More data for bonded parts are given in column SEE REPAIR TASK. Use the data for the selection of the related repair solution.

IPL FIG. ITEM	COMPONENT PART NAME	IPL FIG. ITEM	REPLACEMENT PART NAME	SEE REPAIR TASK
07Y-001 07Y-010	Housing Housing Assembly	07Y-020	Sliding Strip	Replacement of the Bonded Parts self adhesive
07Y-001 07Y-010	Housing Housing Assembly	07Y-030	Sliding Strip	Replacement of the Bonded Parts self adhesive
07Y-001 07Y-010	Housing Housing Assembly	07Y-200	Sealing Section	Replacement of the Bonded Parts Material No. 08-026 Adhesive/ Sealant one Part, RTV Silicone Rubber
07Y-001	Housing	07Y-240	Section	Replacement of the Bonded Parts

Table 3324
Reference list for the replacement of permanent installed parts

				Material No. 08-004 Adhesive Sealant
07Y-001	Housing	07Y-250	Placard	Replacement of the Self-adhesive Placards self adhesive
07Y-001	Housing	07Y-260	Placard	Replacement of the Self-adhesive Placards self adhesive

Table 3324
Reference list for the replacement of permanent installed parts

(b) Remove the screws 07Y-130, 07Y-140, 07Y-270, the washers 07Y-150, 07Y-160, 07Y-280 and the housing assembly 07Y-010 from the lavatory structure.

(c) Remove the stud 07Y-220 from the housing assembly 07Y-010.

(d) Remove the glass mirror 07Y-210 from the screws 07Y-230.

(e) Remove the screws 07Y-230 from the housing assembly 07Y-010.

(f) Remove the screws 07Y-180, 07Y-190 and the decor covers 07Y-170 from the housing assembly 07Y-010.

(g) Remove the screws 07Y-060 and the fittings 07Y-050.

SUB TASK 25-41-51-010-100-B01
D2549010504800

2. Removal of the Housing (07Y-1)

NOTE: **See TABLE 3325 for the references for the replacement procedure of permanent installed parts.**

More data for bonded parts are given in column SEE REPAIR TASK. Use the data for the selection of the related repair solution.

IPL FIG. ITEM	COMPONENT PART NAME	IPL FIG. ITEM	REPLACEMENT PART NAME	SEE REPAIR TASK
07Y-001 07Y-010	Housing Housing Assembly	07Y-020	Sliding Strip	Replacement of the Bonded Parts self adhesive
07Y-001 07Y-010	Housing Housing Assembly	07Y-030	Sliding Strip	Replacement of the Bonded Parts self adhesive
07Y-001 07Y-010	Housing Housing Assembly	07Y-200	Sealing Section	Replacement of the Bonded Parts Material No. 08-026 Adhesive/ Sealant one Part, RTV Silicone Rubber
07Y-001	Housing	07Y-240	Section	Replacement of the Bonded Parts Material No. 08-004 Adhesive Sealant
07Y-001	Housing	07Y-250	Placard	Replacement of the Self-adhesive Placards self adhesive
07Y-001	Housing	07Y-260	Placard	Replacement of the Self-adhesive Placards self adhesive

Table 3325
Reference list for the replacement of permanent installed parts

(b) Remove the screws 07Y-130, 07Y-140, 07Y-270, the washers 07Y-150, 07Y-160, 07Y-280 and the housing assembly 07Y-010 from the lavatory structure.

(c) Remove the stud 07Y-220 from the housing assembly 07Y-010.

(d) Remove the glass mirror 07Y-210 from the screws 07Y-230.

(e) Remove the screws 07Y-230 from the housing assembly 07Y-010.

(f) Remove the screws 07Y-180, 07Y-190 and the decor covers 07Y-390, 07Y-400 from the housing assembly 07Y-010.

(g) Remove the screws 07Y-060 and the fittings 07Y-050.

SUB TASK 25-41-51-010-100-C01
D2549010514200

3. Removal of the Housing (07Y-1)

NOTE: **See TABLE 3326 for the references for the replacement procedure of permanent installed parts.**

More data for bonded parts are given in column SEE REPAIR TASK. Use the data for the selection of the related repair solution.

IPL FIG. ITEM	COMPONENT PART NAME	IPL FIG. ITEM	REPLACEMENT PART NAME	SEE REPAIR TASK
07Y-001 07Y-010	Housing Housing Assembly	07Y-020	Sliding Strip	Replacement of the Bonded Parts self adhesive
07Y-001 07Y-010	Housing Housing Assembly	07Y-030	Sliding Strip	Replacement of the Bonded Parts self adhesive
07Y-001 07Y-010	Housing	07Y-200	Sealing Section	Replacement of the Bonded Parts

Table 3326
Reference list for the replacement of permanent installed parts

	Housing Assembly			Material No. 08-026 Adhesive/ Sealant one Part, RTV Silicone Rubber
07Y-001	Housing	07Y-240	Section	Replacement of the Bonded Parts Material No. 08-004 Adhesive Sealant
07Y-001	Housing	07Y-250	Placard	Replacement of the Self-adhesive Placards self adhesive
07Y-001	Housing	07Y-260	Placard	Replacement of the Self-adhesive Placards self adhesive

Table 3326
Reference list for the replacement of permanent installed parts

(b) Remove the screws 07Y-130, 07Y-140, 07Y-270, the washers 07Y-150, 07Y-160, 07Y-280 and the housing assembly 07Y-010 from the lavatory structure.

(c) Remove the stud 07Y-220 from the housing assembly 07Y-010.

(d) Remove the glass mirror 07Y-210 from the screws 07Y-230.

(e) Remove the screws 07Y-230 from the housing assembly 07Y-010.

(f) Remove the screws 07Y-180, 07Y-190 and the decor covers 07Y-170, 07Y-390, 07Y-400 from the housing assembly 07Y-010.

(g) Remove the screws 07Y-060 and the fittings 07Y-050.

SUB TASK 25-41-51-010-100-D01
D2549020601000

4. Removal of the Housing (07Y-1)

NOTE: **See TABLE 3327 for the references for the replacement procedure of permanent installed parts.**

More data for bonded parts are given in column SEE REPAIR TASK. Use the data for the selection of the related repair solution.

IPL FIG. ITEM	COMPONENT PART NAME	IPL FIG. ITEM	REPLACEMENT PART NAME	SEE REPAIR TASK
07Y-001 07Y-010	Housing Housing Assembly	07Y-020	Sliding Strip	Replacement of the Bonded Parts self adhesive
07Y-001 07Y-010	Housing Housing Assembly	07Y-030	Sliding Strip	Replacement of the Bonded Parts self adhesive
07Y-001 07Y-010	Housing Housing Assembly	07Y-200	Sealing Section	Replacement of the Bonded Parts Material No. 08-026 Adhesive/ Sealant one Part, RTV Silicone Rubber
07Y-001	Housing	07Y-240	Section	Replacement of the Bonded Parts Material No. 08-004 Adhesive Sealant

Table 3327
Reference list for the replacement of permanent installed parts

07Y-001	Housing	07Y-250	Placard	Replacement of the Self-adhesive Placards self adhesive
07Y-001	Housing	07Y-260	Placard	Replacement of the Self-adhesive Placards self adhesive

Table 3327
Reference list for the replacement of permanent installed parts

(b) Remove the screws 07Y-130, 07Y-140, 07Y-270, the washers 07Y-150, 07Y-160, 07Y-280 and the housing assembly 07Y-010 from the lavatory structure.

(c) Remove the stud 07Y-220 from the housing assembly 07Y-010.

(d) Remove the glass mirror 07Y-210 from the screws 07Y-230.

(e) Remove the screws 07Y-230 from the housing assembly 07Y-010.

(f) Remove the screws 07Y-180, 07Y-190 and the decor covers 07Y-170 from the housing assembly 07Y-010.

(g) Remove the screws 07Y-370, the washers 07Y-380 and the cosmetics holder 07Y-360.

NOTE: For further instructions, see CMMV 25-20-08_C5307 (cosmetics holder).

(h) Remove the screws 07Y-060 and the fittings 07Y-050.

SUB TASK 25-41-51-010-100-E01
D2549020503600 D2549020504600 D2549020601400 D2549020601600 R225401133-000

5. Removal of the Housing (07Y-1)

NOTE: See TABLE 3328 for the references for the replacement procedure of permanent installed parts.

More data for bonded parts are given in column SEE REPAIR TASK. Use the data for the selection of the related repair solution.

IPL FIG. ITEM	COMPONENT PART NAME	IPL FIG. ITEM	REPLACEMENT PART NAME	SEE REPAIR TASK
07Y-001 07Y-010	Housing Housing Assembly	07Y-020	Sliding Strip	Replacement of the Bonded Parts self adhesive
07Y-001 07Y-010	Housing Housing Assembly	07Y-030	Sliding Strip	Replacement of the Bonded Parts self adhesive
07Y-001 07Y-010	Housing Housing Assembly	07Y-200	Sealing Section	Replacement of the Bonded Parts Material No. 08-026 Adhesive/ Sealant one Part, RTV Silicone Rubber
07Y-001	Housing	07Y-240	Section	Replacement of the Bonded Parts Material No. 08-004 Adhesive Sealant
07Y-001	Housing	07Y-250	Placard	Replacement of the Self-adhesive Placards self adhesive
07Y-001	Housing	07Y-260	Placard	Replacement of the Self-adhesive Placards self adhesive

Table 3328
Reference list for the replacement of permanent installed parts

(b) Remove the screws 07Y-130, 07Y-140, 07Y-270, the washers 07Y-150, 07Y-160, 07Y-280 and the housing assembly 07Y-010 from the lavatory structure.

(c) Remove the stud 07Y-220 from the housing assembly 07Y-010.

(d) Remove the glass mirror 07Y-210 from the screws 07Y-230.

(e) Remove the screws 07Y-230 from the housing assembly 07Y-010.

(f) Remove the screws 07Y-180, 07Y-190 and the decor covers 07Y-170 from the housing assembly 07Y-010.

(g) Remove the screw 07Y-320, the nut 07Y-310 and the flower vase 07Y-290 from the bracket 07Y-300.

(h) Remove the screws 07Y-330, the washers 07Y-340, the nuts 07Y-350 and the bracket 07Y-300 from the housing assembly 07Y-010.

(i) Remove the screws 07Y-060 and the fittings 07Y-050.

SUB TASK 25-41-51-010-100-F01

D2549010401600 D2549010402400 D2549010403200 D2549010403800 D2549010404600 D2549010404800 D2549010405000 D2549010405200 D2549010405600 D2549010405800 D2549010406400 D2549010407000 D2549010610600 D2549020300400 D2549020301000 D2549020301600 D2549020302000 D2549020302800 D2549020401400 D2549020401600 D2549020402400 D2549020406800 D2549020407600 D2549020408000 D2549020408200 D2549020408800 D2549020409200 D2549020409400 D2549020410200 D2549020410400 D2549020411000 D2549020411200 D2549020411400 D2549020411600 D2549020411800 D2549020412000 D2549020412200 D2549020412400 D2549020412800 D2549020413000 D2549020413200 D2549020413400 D2549020413600 D2549020413800 D2549020414000 D2549020414200 D2549020414600 D2549020513200 D2549020606000 D2549020608800 D2549020706400 D2549020707800 D2549020708800 D2549020804400 D2549030410600 D2549030410800 D2549030411600 D2549030411800 D2549030412200 D2549030413400 D2549030414200 D2549030414600 D2549030414800 D2549030700600 D2549030700800 D2549030701000 D2549030701600 D2549030701800 D2549030702000 D2549030702200 D2549030702400 D2549030702600 D2549030702800 D2549030703000 D2549030703200 D2549030703400 D2549030703600 D2549030704000 D2549030704200 D2549030704400 D2549030704600 D2549030705600 D2549040501400 R225401136-008 R225401136-014 R225401183-004 R225401183-006 R225401196-024 R225401196-070 R225401602-000 R225401624-000 R225401627-000 R225401627-002 R225401627-

004 R225401646-002 R225401673-006 R225401683-000 R225401685-000 R225401685-002 R225401691-002 R225401808-000 R225401811-000 R225401814-000

6. Removal of the Housing

(a) Not applicable.

TASK 25-41-51-000-806-A01

D2547160900200 D2547160900400 D2547161903000 D2549010400000 D2549010400200
D2549010400400 D2549010400600 D2549010400800 D2549010401000 D2549010401400
D2549010401600 D2549010401800 D2549010402000 D2549010402200 D2549010402400
D2549010402600 D2549010402800 D2549010403000 D2549010403200 D2549010403400
D2549010403600 D2549010403800 D2549010404000 D2549010404200 D2549010404400
D2549010404600 D2549010404800 D2549010405000 D2549010405200 D2549010405400
D2549010405600 D2549010405800 D2549010406000 D2549010406200 D2549010406400
D2549010406800 D2549010407000 D2549010500000 D2549010500400 D2549010500600
D2549010500800 D2549010501000 D2549010501200 D2549010501400 D2549010501600
D2549010501800 D2549010502000 D2549010502200 D2549010502400 D2549010502600
D2549010502800 D2549010503200 D2549010503400 D2549010503600 D2549010503800
D2549010504200 D2549010504400 D2549010504600 D2549010504800 D2549010505000
D2549010505200 D2549010505400 D2549010505600 D2549010505800 D2549010506000
D2549010506200 D2549010506400 D2549010506800 D2549010507000 D2549010507200
D2549010507400 D2549010507600 D2549010507800 D2549010508000 D2549010508200
D2549010508400 D2549010508600 D2549010508800 D2549010509000 D2549010509200
D2549010509400 D2549010509600 D2549010509800 D2549010510000 D2549010510200
D2549010510400 D2549010510600 D2549010510800 D2549010511000 D2549010511200
D2549010511400 D2549010511600 D2549010511800 D2549010512000 D2549010512200
D2549010512400 D2549010512600 D2549010513000 D2549010513200 D2549010513400
D2549010513600 D2549010513800 D2549010514000 D2549010514200 D2549010514400
D2549010514600 D2549010514800 D2549010600000 D2549010600200 D2549010600400
D2549010600600 D2549010600800 D2549010601000 D2549010601200 D2549010601400
D2549010601600 D2549010601800 D2549010602000 D2549010602200 D2549010602400
D2549010602600 D2549010602800 D2549010603000 D2549010603200 D2549010603400
D2549010603600 D2549010603800 D2549010604000 D2549010604200 D2549010604400
D2549010604600 D2549010604800 D2549010605000 D2549010605200 D2549010605600
D2549010605800 D2549010606000 D2549010606200 D2549010606400 D2549010606600
D2549010606800 D2549010607000 D2549010607200 D2549010607400 D2549010607600
D2549010607800 D2549010608200 D2549010608400 D2549010608600 D2549010608800
D2549010609000 D2549010609200 D2549010609400 D2549010609600 D2549010609800
D2549010610000 D2549010610200 D2549010610400 D2549010610600 D2549010610800
D2549010611000 D2549010611200 D2549010611400 D2549010611600 D2549010611800
D2549010612000 D2549010612200 D2549010612400 D2549010612600 D2549010613000
D2549010613200 D2549010613400 D2549010613600 D2549010613800 D2549010614200
D2549010614400 D2549010614600 D2549010614800 D2549020300000 D2549020300400
D2549020300600 D2549020300800 D2549020301000 D2549020301600 D2549020301800
D2549020302000 D2549020302800 D2549020400000 D2549020400200 D2549020400400
D2549020400600 D2549020400800 D2549020401000 D2549020401200 D2549020401400
D2549020401600 D2549020402000 D2549020402200 D2549020402400 D2549020402600
D2549020403000 D2549020403200 D2549020403400 D2549020403600 D2549020403800
D2549020404000 D2549020404200 D2549020404400 D2549020404600 D2549020404800
D2549020405000 D2549020405200 D2549020405400 D2549020405600 D2549020405800
D2549020406000 D2549020406200 D2549020406400 D2549020406600 D2549020406800
D2549020407000 D2549020407200 D2549020407400 D2549020407600 D2549020407800
D2549020408000 D2549020408200 D2549020408600 D2549020408800 D2549020409000

D2549020409200 D2549020409400 D2549020409600 D2549020409800 D2549020410200
D2549020410400 D2549020410600 D2549020410800 D2549020411000 D2549020411200
D2549020411400 D2549020411600 D2549020411800 D2549020412000 D2549020412200
D2549020412400 D2549020412600 D2549020412800 D2549020413000 D2549020413200
D2549020413400 D2549020413600 D2549020413800 D2549020414000 D2549020414200
D2549020414600 D2549020414800 D2549020500000 D2549020500200 D2549020500400
D2549020500600 D2549020500800 D2549020501000 D2549020501200 D2549020501400
D2549020501600 D2549020501800 D2549020502000 D2549020502200 D2549020502400
D2549020502600 D2549020502800 D2549020503000 D2549020503200 D2549020503400
D2549020503600 D2549020503800 D2549020504000 D2549020504200 D2549020504400
D2549020504600 D2549020504800 D2549020505000 D2549020505200 D2549020505400
D2549020505600 D2549020505800 D2549020506000 D2549020506200 D2549020506400
D2549020506600 D2549020506800 D2549020507000 D2549020507200 D2549020507400
D2549020507600 D2549020507800 D2549020508000 D2549020508200 D2549020508400
D2549020508600 D2549020508800 D2549020509000 D2549020509200 D2549020509600
D2549020509800 D2549020510000 D2549020510400 D2549020510600 D2549020510800
D2549020511000 D2549020511200 D2549020511600 D2549020511800 D2549020512000
D2549020512200 D2549020512400 D2549020512600 D2549020512800 D2549020513000
D2549020513200 D2549020513400 D2549020513600 D2549020513800 D2549020514000
D2549020514200 D2549020514400 D2549020514600 D2549020514800 D2549020600000
D2549020600200 D2549020600400 D2549020600800 D2549020601000 D2549020601200
D2549020601400 D2549020601600 D2549020601800 D2549020602000 D2549020602200
D2549020602400 D2549020602600 D2549020602800 D2549020603000 D2549020603200
D2549020603400 D2549020603600 D2549020603800 D2549020604000 D2549020604200
D2549020604400 D2549020604600 D2549020604800 D2549020605000 D2549020605200
D2549020605400 D2549020605600 D2549020605800 D2549020606000 D2549020606400
D2549020606600 D2549020606800 D2549020607000 D2549020607200 D2549020607400
D2549020607600 D2549020607800 D2549020608200 D2549020608400 D2549020608600
D2549020608800 D2549020609000 D2549020609200 D2549020609400 D2549020609600
D2549020609800 D2549020610000 D2549020610200 D2549020610400 D2549020610600
D2549020610800 D2549020611000 D2549020611200 D2549020611400 D2549020611600
D2549020611800 D2549020612000 D2549020612200 D2549020612400 D2549020612600
D2549020612800 D2549020613000 D2549020613200 D2549020613800 D2549020614000
D2549020614400 D2549020614600 D2549020614800 D2549020700000 D2549020700200
D2549020700400 D2549020700600 D2549020700800 D2549020701000 D2549020701200
D2549020701400 D2549020701600 D2549020701800 D2549020702000 D2549020702200
D2549020702400 D2549020702600 D2549020702800 D2549020703200 D2549020703400
D2549020703600 D2549020703800 D2549020704000 D2549020704200 D2549020704400
D2549020704600 D2549020704800 D2549020705000 D2549020705200 D2549020705400
D2549020705600 D2549020705800 D2549020706000 D2549020706200 D2549020706400
D2549020706600 D2549020706800 D2549020707000 D2549020707200 D2549020707400
D2549020707600 D2549020707800 D2549020708000 D2549020708200 D2549020708400
D2549020708600 D2549020708800 D2549020709000 D2549020709200 D2549020709400
D2549020709600 D2549020709800 D2549020710000 D2549020710200 D2549020710400
D2549020710600 D2549020710800 D2549020711000 D2549020711200 D2549020711400
D2549020711600 D2549020712000 D2549020712200 D2549020712400 D2549020712600
D2549020712800 D2549020713000 D2549020713200 D2549020713400 D2549020713600

D2549020713800 D2549020714000 D2549020714400 D2549020714600 D2549020800000
D2549020800200 D2549020800400 D2549020800600 D2549020800800 D2549020801000
D2549020801200 D2549020801400 D2549020801600 D2549020801800 D2549020802000
D2549020802200 D2549020802400 D2549020802600 D2549020802800 D2549020803000
D2549020803200 D2549020803400 D2549020803600 D2549020803800 D2549020804000
D2549020804200 D2549020804400 D2549020804800 D2549020805000 D2549020805200
D2549020805400 D2549020805600 D2549020805800 D2549020806000 D2549020806200
D2549020806400 D2549020806600 D2549020806800 D2549020807000 D2549020807200
D2549020807400 D2549020807600 D2549020807800 D2549020808200 D2549020808400
D2549020808600 D2549020808800 D2549020809000 D2549020809400 D2549020809600
D2549020809800 D2549020810000 D2549020810200 D2549020810400 D2549020810600
D2549020810800 D2549020811200 D2549020811400 D2549020811600 D2549020811800
D2549020812000 D2549020812200 D2549020812400 D2549020812600 D2549020812800
D2549020813000 D2549020813200 D2549020813400 D2549020813600 D2549020813800
D2549020814000 D2549020814200 D2549020814400 D2549020814600 D2549020814800
D2549030400000 D2549030400200 D2549030400400 D2549030400600 D2549030401000
D2549030401200 D2549030401400 D2549030401600 D2549030401800 D2549030402000
D2549030402200 D2549030402400 D2549030402600 D2549030402800 D2549030403000
D2549030403400 D2549030403600 D2549030403800 D2549030404000 D2549030404200
D2549030404400 D2549030404600 D2549030404800 D2549030405000 D2549030405200
D2549030405400 D2549030405600 D2549030405800 D2549030406000 D2549030406400
D2549030406600 D2549030406800 D2549030407000 D2549030407200 D2549030407400
D2549030407600 D2549030407800 D2549030408000 D2549030408200 D2549030408400
D2549030408600 D2549030409000 D2549030409200 D2549030409400 D2549030409600
D2549030409800 D2549030410000 D2549030410200 D2549030410400 D2549030410600
D2549030410800 D2549030411200 D2549030411400 D2549030411600 D2549030411800
D2549030412000 D2549030412200 D2549030412400 D2549030412600 D2549030412800
D2549030413000 D2549030413200 D2549030413400 D2549030413600 D2549030414000
D2549030414200 D2549030414400 D2549030414600 D2549030414800 D2549030500200
D2549030500400 D2549030500600 D2549030500800 D2549030501000 D2549030501200
D2549030501400 D2549030501600 D2549030501800 D2549030502000 D2549030502200
D2549030502400 D2549030502600 D2549030502800 D2549030503000 D2549030503200
D2549030503400 D2549030503600 D2549030503800 D2549030504000 D2549030504200
D2549030504600 D2549030504800 D2549030505200 D2549030505400 D2549030505600
D2549030505800 D2549030506000 D2549030506200 D2549030506400 D2549030506600
D2549030506800 D2549030507000 D2549030507200 D2549030507400 D2549030507600
D2549030507800 D2549030508000 D2549030508200 D2549030508400 D2549030508600
D2549030508800 D2549030509000 D2549030509200 D2549030509400 D2549030509600
D2549030509800 D2549030510000 D2549030510200 D2549030510400 D2549030510600
D2549030510800 D2549030511000 D2549030511200 D2549030511400 D2549030511600
D2549030511800 D2549030512000 D2549030512200 D2549030512400 D2549030512800
D2549030513000 D2549030513200 D2549030513400 D2549030513600 D2549030513800
D2549030514000 D2549030514200 D2549030514400 D2549030514600 D2549030514800
D2549030600000 D2549030600200 D2549030600400 D2549030600600 D2549030600800
D2549030601000 D2549030601200 D2549030601400 D2549030601600 D2549030601800
D2549030602000 D2549030602200 D2549030602400 D2549030602600 D2549030602800
D2549030603000 D2549030603200 D2549030603400 D2549030603600 D2549030603800

D2549030604200 D2549030604400 D2549030604600 D2549030604800 D2549030605000
D2549030605200 D2549030605400 D2549030605600 D2549030605800 D2549030606000
D2549030606200 D2549030606400 D2549030606600 D2549030606800 D2549030607000
D2549030607200 D2549030607400 D2549030607600 D2549030607800 D2549030608000
D2549030608200 D2549030608400 D2549030608600 D2549030608800 D2549030609000
D2549030609200 D2549030609800 D2549030610000 D2549030610200 D2549030610400
D2549030610600 D2549030611000 D2549030611200 D2549030611400 D2549030611600
D2549030611800 D2549030612000 D2549030612200 D2549030612400 D2549030612600
D2549030612800 D2549030613200 D2549030613400 D2549030613600 D2549030613800
D2549030614000 D2549030614200 D2549030614400 D2549030614600 D2549030614800
D2549030700000 D2549030700200 D2549030700400 D2549030700600 D2549030700800
D2549030701000 D2549030701200 D2549030701400 D2549030701600 D2549030701800
D2549030702000 D2549030702200 D2549030702400 D2549030702600 D2549030702800
D2549030703000 D2549030703200 D2549030703400 D2549030703600 D2549030703800
D2549030704000 D2549030704200 D2549030704400 D2549030704600 D2549030704800
D2549030705200 D2549030705600 D2549040500200 D2549040500400 D2549040500600
D2549040500800 D2549040501000 D2549040501200 D2549040501400 D2549040501600
D2549040501800 D2549040502000 R225401107-000 R225401107-002 R225401107-004
R225401115-000 R225401115-002 R225401128-000 R225401133-000 R225401134-000
R225401134-002 R225401134-004 R225401134-008 R225401134-010 R225401134-012
R225401134-014 R225401134-016 R225401134-018 R225401134-020 R225401134-022
R225401134-024 R225401134-026 R225401134-028 R225401134-030 R225401134-032
R225401134-034 R225401134-036 R225401134-038 R225401136-000 R225401136-004
R225401136-006 R225401136-008 R225401136-010 R225401136-012 R225401136-014
R225401136-016 R225401136-018 R225401136-020 R225401136-022 R225401136-024
R225401137-000 R225401137-002 R225401137-004 R225401137-006 R225401137-008
R225401137-010 R225401137-012 R225401137-014 R225401137-016 R225401139-000
R225401142-000 R225401142-002 R225401145-000 R225401145-002 R225401145-004
R225401145-006 R225401145-008 R225401145-010 R225401145-012 R225401145-014
R225401146-000 R225401146-002 R225401152-000 R225401152-002 R225401152-004
R225401152-006 R225401152-008 R225401152-010 R225401153-000 R225401159-000
R225401160-000 R225401160-002 R225401168-000 R225401168-002 R225401168-004
R225401168-006 R225401168-008 R225401168-010 R225401168-012 R225401168-014
R225401168-016 R225401168-018 R225401168-020 R225401168-022 R225401168-024
R225401168-026 R225401168-028 R225401172-000 R225401172-002 R225401172-004
R225401172-006 R225401172-008 R225401172-010 R225401172-012 R225401172-014
R225401172-016 R225401172-018 R225401175-000 R225401175-002 R225401176-000
R225401183-000 R225401183-002 R225401183-004 R225401183-006 R225401183-008
R225401188-000 R225401188-002 R225401188-004 R225401188-006 R225401192-000
R225401192-002 R225401195-000 R225401196-000 R225401196-002 R225401196-004
R225401196-006 R225401196-008 R225401196-010 R225401196-012 R225401196-014
R225401196-016 R225401196-018 R225401196-020 R225401196-022 R225401196-024
R225401196-034 R225401196-036 R225401196-038 R225401196-040 R225401196-042
R225401196-044 R225401196-046 R225401196-048 R225401196-050 R225401196-052
R225401196-054 R225401196-056 R225401196-058 R225401196-060 R225401196-062
R225401196-064 R225401196-066 R225401196-068 R225401196-070 R225401199-000
R225401199-002 R225401199-004 R225401199-006 R225401199-008 R225401199-010

R225401199-012 R225401600-000 R225401600-002 R225401600-004 R225401602-000 R225401603-000 R225401605-000 R225401605-002 R225401609-000 R225401611-000 R225401611-006 R225401611-008 R225401611-010 R225401611-012 R225401611-014 R225401611-016 R225401611-018 R225401611-020 R225401613-000 R225401614-000 R225401618-000 R225401618-002 R225401619-000 R225401619-002 R225401622-000 R225401622-002 R225401624-000 R225401625-000 R225401627-000 R225401627-002 R225401627-004 R225401629-000 R225401629-002 R225401639-000 R225401639-002 R225401643-000 R225401643-002 R225401643-004 R225401643-006 R225401643-008 R225401646-000 R225401646-002 R225401647-000 R225401648-000 R225401648-002 R225401648-004 R225401648-006 R225401648-008 R225401649-000 R225401656-000 R225401656-002 R225401658-000 R225401662-000 R225401662-002 R225401671-000 R225401671-002 R225401673-000 R225401673-002 R225401673-004 R225401673-006 R225401675-000 R225401676-000 R225401683-000 R225401685-000 R225401685-002 R225401688-000 R225401689-004 R225401689-006 R225401691-000 R225401691-002 R225401693-000 R225401697-000 R225401697-002 R225401803-000 R225401803-002 R225401808-000 R225401811-000 R225401814-000

68. Removal and Disassembly of the External Waste Door

A. General

A complete disassembly of the component is not necessary and not recommended.

Do not disassemble the component more than it is necessary for:

- Cleaning
- Visual Inspection
- Replacement of defective parts.

B. Job Set-up Information
(1) Consumable Materials

REFERENCE	DESIGNATION
08-010A	Epoxy Resin and Hardener Adhesive

Table 3329
Consumable Materials

C. Procedure

WARNING: **BE CAREFUL WHEN YOU USE SOLVENTS/CLEANING AGENTS, SEALANTS AND OTHER MATERIALS. OBEY THE MATERIAL MANUFACTURER'S INSTRUCTIONS AND THE LOCAL REGULATIONS. MAKE SURE THAT THERE IS A GOOD FLOW OF AIR THROUGH THE WORK AREA. DO NOT BREATHE THE FUMES. DO NOT SMOKE. DO NOT USE THESE MATERIALS NEAR A FLAME, SPARKS OR SOURCES OF HEAT. USE PROTECTIVE CLOTHING, GOGGLES AND GLOVES. IF YOU GET ONE OF THESE MATERIALS ON YOUR SKIN OR IN YOUR EYES, FLUSH IT AWAY WITH A FLOW OF CLEAN WATER. IF YOU GET ONE OF THESE MATERIALS IN YOUR MOUTH, GET IMMEDIATE MEDICAL AID. IN GENERAL, THESE MATERIALS ARE POISONOUS, FLAMMABLE AND SKIN IRRITANTS.**

CAUTION: **DO ALL THE WORK ON A CLEAN, SOFT SURFACE TO PREVENT DAMAGE TO THE COMPONENTS.**

SUB TASK 25-41-51-000-076-A01
D2549020802800

1. Removal and Disassembly of the External Waste Door (09-1)

NOTE: **See TABLE 3330 for the references for the replacement procedures of permanent installed parts.**

More data for bonded parts are given in column SEE REPAIR TASK. Use the data for the selection of the related repair solution.

IPL FIG. ITEM	COMPONENT PART NAME	IPL FIG. ITEM	REPLACEMENT PART NAME	SEE REPAIR TASK
09-001	External Waste Door	09-090	Bumper	Replacement of the Bonded Parts Material No. 08-010A Epoxy Resin and Hardener Adhesive

Table 3330
Reference list for the replacement of permanent installed parts

(a) Remove and disassemble the waste container door assembly 09-010 as follows:

1 Remove the screws 09-150 and the waste container door assembly 09-010 from the lavatory structure.

2 Remove the screws 09-050 and the hinge 09-020.

3 Disassemble the hinge 09-020 as follows:
a

WARNING: BE VERY CAREFUL WHEN YOU REMOVE OR INSTALL THE SPRING. BECAUSE THERE IS REMAINING TENSION IN THE SPRING, IT CAN CAUSE YOU INJURY.

Remove the springs 09-040 from the hinge 09-030.

4 Remove the screws 09-120 and the sections 09-100, 09-110.

5 Remove the screws 09-080, the mounting plate 09-070 and the latch 09-060.

(b) Remove the screws 09-160 and the sections 09-130, 09-140 from the lavatory structure.

SUB TASK 25-41-51-000-076-B01

D2547160900200 D2547160900400 D2547161903000 D2549010400000
D2549010400200 D2549010400400 D2549010400600 D2549010400800
D2549010401000 D2549010401400 D2549010401600 D2549010401800
D2549010402000 D2549010402200 D2549010402400 D2549010402600
D2549010402800 D2549010403000 D2549010403200 D2549010403400
D2549010403600 D2549010403800 D2549010404000 D2549010404200
D2549010404400 D2549010404600 D2549010404800 D2549010405000
D2549010405200 D2549010405400 D2549010405600 D2549010405800
D2549010406000 D2549010406200 D2549010406400 D2549010406800
D2549010407000 D2549010500000 D2549010500400 D2549010500600
D2549010500800 D2549010501000 D2549010501200 D2549010501400
D2549010501600 D2549010501800 D2549010502000 D2549010502200
D2549010502400 D2549010502600 D2549010502800 D2549010503200
D2549010503400 D2549010503600 D2549010503800 D2549010504200
D2549010504400 D2549010504600 D2549010504800 D2549010505000
D2549010505200 D2549010505400 D2549010505600 D2549010505800
D2549010506000 D2549010506200 D2549010506400 D2549010506800
D2549010507000 D2549010507200 D2549010507400 D2549010507600
D2549010507800 D2549010508000 D2549010508200 D2549010508400
D2549010508600 D2549010508800 D2549010509000 D2549010509200
D2549010509400 D2549010509600 D2549010509800 D2549010510000
D2549010510200 D2549010510400 D2549010510600 D2549010510800
D2549010511000 D2549010511200 D2549010511400 D2549010511600
D2549010511800 D2549010512000 D2549010512200 D2549010512400
D2549010512600 D2549010513000 D2549010513200 D2549010513400
D2549010513600 D2549010513800 D2549010514000 D2549010514200
D2549010514400 D2549010514600 D2549010514800 D2549010600000
D2549010600200 D2549010600400 D2549010600600 D2549010600800

D2549010601000 D2549010601200 D2549010601400 D2549010601600
D2549010601800 D2549010602000 D2549010602200 D2549010602400
D2549010602600 D2549010602800 D2549010603000 D2549010603200
D2549010603400 D2549010603600 D2549010603800 D2549010604000
D2549010604200 D2549010604400 D2549010604600 D2549010604800
D2549010605000 D2549010605200 D2549010605600 D2549010605800
D2549010606000 D2549010606200 D2549010606400 D2549010606600
D2549010606800 D2549010607000 D2549010607200 D2549010607400
D2549010607600 D2549010607800 D2549010608200 D2549010608400
D2549010608600 D2549010608800 D2549010609000 D2549010609200
D2549010609400 D2549010609600 D2549010609800 D2549010610000
D2549010610200 D2549010610400 D2549010610600 D2549010610800
D2549010611000 D2549010611200 D2549010611400 D2549010611600
D2549010611800 D2549010612000 D2549010612200 D2549010612400
D2549010612600 D2549010613000 D2549010613200 D2549010613400
D2549010613600 D2549010613800 D2549010614200 D2549010614400
D2549010614600 D2549010614800 D2549020300000 D2549020300400
D2549020300600 D2549020300800 D2549020301000 D2549020301600
D2549020301800 D2549020302000 D2549020302800 D2549020400000
D2549020400200 D2549020400400 D2549020400600 D2549020400800
D2549020401000 D2549020401200 D2549020401400 D2549020401600
D2549020402000 D2549020402200 D2549020402400 D2549020402600
D2549020403000 D2549020403200 D2549020403400 D2549020403600
D2549020403800 D2549020404000 D2549020404200 D2549020404400
D2549020404600 D2549020404800 D2549020405000 D2549020405200
D2549020405400 D2549020405600 D2549020405800 D2549020406000
D2549020406200 D2549020406400 D2549020406600 D2549020406800
D2549020407000 D2549020407200 D2549020407400 D2549020407600
D2549020407800 D2549020408000 D2549020408200 D2549020408600
D2549020408800 D2549020409000 D2549020409200 D2549020409400
D2549020409600 D2549020409800 D2549020410200 D2549020410400
D2549020410600 D2549020410800 D2549020411000 D2549020411200
D2549020411400 D2549020411600 D2549020411800 D2549020412000
D2549020412200 D2549020412400 D2549020412600 D2549020412800
D2549020413000 D2549020413200 D2549020413400 D2549020413600
D2549020413800 D2549020414000 D2549020414200 D2549020414600
D2549020414800 D2549020500000 D2549020500200 D2549020500400
D2549020500600 D2549020500800 D2549020501000 D2549020501200
D2549020501400 D2549020501600 D2549020501800 D2549020502000
D2549020502200 D2549020502400 D2549020502600 D2549020502800
D2549020503000 D2549020503200 D2549020503400 D2549020503600
D2549020503800 D2549020504000 D2549020504200 D2549020504400
D2549020504600 D2549020504800 D2549020505000 D2549020505200
D2549020505400 D2549020505600 D2549020505800 D2549020506000
D2549020506200 D2549020506400 D2549020506600 D2549020506800
D2549020507000 D2549020507200 D2549020507400 D2549020507600
D2549020507800 D2549020508000 D2549020508200 D2549020508400

D2549020508600 D2549020508800 D2549020509000 D2549020509200
D2549020509600 D2549020509800 D2549020510000 D2549020510400
D2549020510600 D2549020510800 D2549020511000 D2549020511200
D2549020511600 D2549020511800 D2549020512000 D2549020512200
D2549020512400 D2549020512600 D2549020512800 D2549020513000
D2549020513200 D2549020513400 D2549020513600 D2549020513800
D2549020514000 D2549020514200 D2549020514400 D2549020514600
D2549020514800 D2549020600000 D2549020600200 D2549020600400
D2549020600800 D2549020601000 D2549020601200 D2549020601400
D2549020601600 D2549020601800 D2549020602000 D2549020602200
D2549020602400 D2549020602600 D2549020602800 D2549020603000
D2549020603200 D2549020603400 D2549020603600 D2549020603800
D2549020604000 D2549020604200 D2549020604400 D2549020604600
D2549020604800 D2549020605000 D2549020605200 D2549020605400
D2549020605600 D2549020605800 D2549020606000 D2549020606400
D2549020606600 D2549020606800 D2549020607000 D2549020607200
D2549020607400 D2549020607600 D2549020607800 D2549020608200
D2549020608400 D2549020608600 D2549020608800 D2549020609000
D2549020609200 D2549020609400 D2549020609600 D2549020609800
D2549020610000 D2549020610200 D2549020610400 D2549020610600
D2549020610800 D2549020611000 D2549020611200 D2549020611400
D2549020611600 D2549020611800 D2549020612000 D2549020612200
D2549020612400 D2549020612600 D2549020612800 D2549020613000
D2549020613200 D2549020613800 D2549020614000 D2549020614400
D2549020614600 D2549020614800 D2549020700000 D2549020700200
D2549020700400 D2549020700600 D2549020700800 D2549020701000
D2549020701200 D2549020701400 D2549020701600 D2549020701800
D2549020702000 D2549020702200 D2549020702400 D2549020702600
D2549020702800 D2549020703200 D2549020703400 D2549020703600
D2549020703800 D2549020704000 D2549020704200 D2549020704400
D2549020704600 D2549020704800 D2549020705000 D2549020705200
D2549020705400 D2549020705600 D2549020705800 D2549020706000
D2549020706200 D2549020706400 D2549020706600 D2549020706800
D2549020707000 D2549020707200 D2549020707400 D2549020707600
D2549020707800 D2549020708000 D2549020708200 D2549020708400
D2549020708600 D2549020708800 D2549020709000 D2549020709200
D2549020709400 D2549020709600 D2549020709800 D2549020710000
D2549020710200 D2549020710400 D2549020710600 D2549020710800
D2549020711000 D2549020711200 D2549020711400 D2549020711600
D2549020712000 D2549020712200 D2549020712400 D2549020712600
D2549020712800 D2549020713000 D2549020713200 D2549020713400
D2549020713600 D2549020713800 D2549020714000 D2549020714400
D2549020714600 D2549020800000 D2549020800200 D2549020800400
D2549020800600 D2549020800800 D2549020801000 D2549020801200
D2549020801400 D2549020801600 D2549020801800 D2549020802000
D2549020802200 D2549020802400 D2549020802600 D2549020803000
D2549020803200 D2549020803400 D2549020803600 D2549020803800

D2549020804000 D2549020804200 D2549020804400 D2549020804800
D2549020805000 D2549020805200 D2549020805400 D2549020805600
D2549020805800 D2549020806000 D2549020806200 D2549020806400
D2549020806600 D2549020806800 D2549020807000 D2549020807200
D2549020807400 D2549020807600 D2549020807800 D2549020808200
D2549020808400 D2549020808600 D2549020808800 D2549020809000
D2549020809400 D2549020809600 D2549020809800 D2549020810000
D2549020810200 D2549020810400 D2549020810600 D2549020810800
D2549020811200 D2549020811400 D2549020811600 D2549020811800
D2549020812000 D2549020812200 D2549020812400 D2549020812600
D2549020812800 D2549020813000 D2549020813200 D2549020813400
D2549020813600 D2549020813800 D2549020814000 D2549020814200
D2549020814400 D2549020814600 D2549020814800 D2549030400000
D2549030400200 D2549030400400 D2549030400600 D2549030401000
D2549030401200 D2549030401400 D2549030401600 D2549030401800
D2549030402000 D2549030402200 D2549030402400 D2549030402600
D2549030402800 D2549030403000 D2549030403400 D2549030403600
D2549030403800 D2549030404000 D2549030404200 D2549030404400
D2549030404600 D2549030404800 D2549030405000 D2549030405200
D2549030405400 D2549030405600 D2549030405800 D2549030406000
D2549030406400 D2549030406600 D2549030406800 D2549030407000
D2549030407200 D2549030407400 D2549030407600 D2549030407800
D2549030408000 D2549030408200 D2549030408400 D2549030408600
D2549030409000 D2549030409200 D2549030409400 D2549030409600
D2549030409800 D2549030410000 D2549030410200 D2549030410400
D2549030410600 D2549030410800 D2549030411200 D2549030411400
D2549030411600 D2549030411800 D2549030412000 D2549030412200
D2549030412400 D2549030412600 D2549030412800 D2549030413000
D2549030413200 D2549030413400 D2549030413600 D2549030414000
D2549030414200 D2549030414400 D2549030414600 D2549030414800
D2549030500200 D2549030500400 D2549030500600 D2549030500800
D2549030501000 D2549030501200 D2549030501400 D2549030501600
D2549030501800 D2549030502000 D2549030502200 D2549030502400
D2549030502600 D2549030502800 D2549030503000 D2549030503200
D2549030503400 D2549030503600 D2549030503800 D2549030504000
D2549030504200 D2549030504600 D2549030504800 D2549030505200
D2549030505400 D2549030505600 D2549030505800 D2549030506000
D2549030506200 D2549030506400 D2549030506600 D2549030506800
D2549030507000 D2549030507200 D2549030507400 D2549030507600
D2549030507800 D2549030508000 D2549030508200 D2549030508400
D2549030508600 D2549030508800 D2549030509000 D2549030509200
D2549030509400 D2549030509600 D2549030509800 D2549030510000
D2549030510200 D2549030510400 D2549030510600 D2549030510800
D2549030511000 D2549030511200 D2549030511400 D2549030511600
D2549030511800 D2549030512000 D2549030512200 D2549030512400
D2549030512800 D2549030513000 D2549030513200 D2549030513400
D2549030513600 D2549030513800 D2549030514000 D2549030514200

D2549030514400 D2549030514600 D2549030514800 D2549030600000
D2549030600200 D2549030600400 D2549030600600 D2549030600800
D2549030601000 D2549030601200 D2549030601400 D2549030601600
D2549030601800 D2549030602000 D2549030602200 D2549030602400
D2549030602600 D2549030602800 D2549030603000 D2549030603200
D2549030603400 D2549030603600 D2549030603800 D2549030604200
D2549030604400 D2549030604600 D2549030604800 D2549030605000
D2549030605200 D2549030605400 D2549030605600 D2549030605800
D2549030606000 D2549030606200 D2549030606400 D2549030606600
D2549030606800 D2549030607000 D2549030607200 D2549030607400
D2549030607600 D2549030607800 D2549030608000 D2549030608200
D2549030608400 D2549030608600 D2549030608800 D2549030609000
D2549030609200 D2549030609800 D2549030610000 D2549030610200
D2549030610400 D2549030610600 D2549030611000 D2549030611200
D2549030611400 D2549030611600 D2549030611800 D2549030612000
D2549030612200 D2549030612400 D2549030612600 D2549030612800
D2549030613200 D2549030613400 D2549030613600 D2549030613800
D2549030614000 D2549030614200 D2549030614400 D2549030614600
D2549030614800 D2549030700000 D2549030700200 D2549030700400
D2549030700600 D2549030700800 D2549030701000 D2549030701200
D2549030701400 D2549030701600 D2549030701800 D2549030702000
D2549030702200 D2549030702400 D2549030702600 D2549030702800
D2549030703000 D2549030703200 D2549030703400 D2549030703600
D2549030703800 D2549030704000 D2549030704200 D2549030704400
D2549030704600 D2549030704800 D2549030705200 D2549030705600
D2549040500200 D2549040500400 D2549040500600 D2549040500800
D2549040501000 D2549040501200 D2549040501400 D2549040501600
D2549040501800 D2549040502000 R225401107-000 R225401107-002 R225401107-
004 R225401115-000 R225401115-002 R225401128-000 R225401133-000 R225401134-
000 R225401134-002 R225401134-004 R225401134-008 R225401134-010 R225401134-
012 R225401134-014 R225401134-016 R225401134-018 R225401134-020 R225401134-
022 R225401134-024 R225401134-026 R225401134-028 R225401134-030 R225401134-
032 R225401134-034 R225401134-036 R225401134-038 R225401136-000 R225401136-
004 R225401136-006 R225401136-008 R225401136-010 R225401136-012 R225401136-
014 R225401136-016 R225401136-018 R225401136-020 R225401136-022 R225401136-
024 R225401137-000 R225401137-002 R225401137-004 R225401137-006 R225401137-
008 R225401137-010 R225401137-012 R225401137-014 R225401137-016 R225401139-
000 R225401142-000 R225401142-002 R225401145-000 R225401145-002 R225401145-
004 R225401145-006 R225401145-008 R225401145-010 R225401145-012 R225401145-
014 R225401146-000 R225401146-002 R225401152-000 R225401152-002 R225401152-
004 R225401152-006 R225401152-008 R225401152-010 R225401153-000 R225401159-
000 R225401160-000 R225401160-002 R225401168-000 R225401168-002 R225401168-
004 R225401168-006 R225401168-008 R225401168-010 R225401168-012 R225401168-
014 R225401168-016 R225401168-018 R225401168-020 R225401168-022 R225401168-
024 R225401168-026 R225401168-028 R225401172-000 R225401172-002 R225401172-
004 R225401172-006 R225401172-008 R225401172-010 R225401172-012 R225401172-
014 R225401172-016 R225401172-018 R225401175-000 R225401175-002 R225401176-

000 R225401183-000 R225401183-002 R225401183-004 R225401183-006 R225401183-008 R225401188-000 R225401188-002 R225401188-004 R225401188-006 R225401192-000 R225401192-002 R225401195-000 R225401196-000 R225401196-002 R225401196-004 R225401196-006 R225401196-008 R225401196-010 R225401196-012 R225401196-014 R225401196-016 R225401196-018 R225401196-020 R225401196-022 R225401196-024 R225401196-034 R225401196-036 R225401196-038 R225401196-040 R225401196-042 R225401196-044 R225401196-046 R225401196-048 R225401196-050 R225401196-052 R225401196-054 R225401196-056 R225401196-058 R225401196-060 R225401196-062 R225401196-064 R225401196-066 R225401196-068 R225401196-070 R225401199-000 R225401199-002 R225401199-004 R225401199-006 R225401199-008 R225401199-010 R225401199-012 R225401600-000 R225401600-002 R225401600-004 R225401602-000 R225401603-000 R225401605-000 R225401605-002 R225401609-000 R225401611-000 R225401611-006 R225401611-008 R225401611-010 R225401611-012 R225401611-014 R225401611-016 R225401611-018 R225401611-020 R225401613-000 R225401614-000 R225401618-000 R225401618-002 R225401619-000 R225401619-002 R225401622-000 R225401622-002 R225401624-000 R225401625-000 R225401627-000 R225401627-002 R225401627-004 R225401629-000 R225401629-002 R225401639-000 R225401639-002 R225401643-000 R225401643-002 R225401643-004 R225401643-006 R225401643-008 R225401646-000 R225401646-002 R225401647-000 R225401648-000 R225401648-002 R225401648-004 R225401648-006 R225401648-008 R225401649-000 R225401656-000 R225401656-002 R225401658-000 R225401662-000 R225401662-002 R225401671-000 R225401671-002 R225401673-000 R225401673-002 R225401673-004 R225401673-006 R225401675-000 R225401676-000 R225401683-000 R225401685-000 R225401685-002 R225401688-000 R225401689-004 R225401689-006 R225401691-000 R225401691-002 R225401693-000 R225401697-000 R225401697-002 R225401803-000 R225401803-002 R225401808-000 R225401811-000 R225401814-000

2. Removal and Disassembly of the External Waste Door

   (a) Not applicable.

TASK 25-41-51-000-806-B01
D2549020613600 R225401134-006

69. Removal and Disassembly of the External Waste Door

A. General

- Not applicable

B. Procedure

SUB TASK 25-41-51-000-108-A01
1. Removal and Disassembly of the External Waste Door

(a) Not applicable.

TASK 25-41-51-000-807-A01

D2547161903000 D2549010400200 D2549010400400 D2549010400600 D2549010400800
D2549010403000 D2549010500000 D2549010500400 D2549010500600 D2549010500800
D2549010501000 D2549010501200 D2549010501400 D2549010501600 D2549010501800
D2549010502000 D2549010502200 D2549010502400 D2549010502600 D2549010502800
D2549010503200 D2549010503400 D2549010503600 D2549010503800 D2549010504400
D2549010504600 D2549010505000 D2549010505200 D2549010505400 D2549010505600
D2549010505800 D2549010506000 D2549010506200 D2549010506400 D2549010506800
D2549010507000 D2549010507200 D2549010507400 D2549010507600 D2549010507800
D2549010508000 D2549010508200 D2549010508600 D2549010508800 D2549010509200
D2549010509400 D2549010509600 D2549010509800 D2549010510000 D2549010510400
D2549010510600 D2549010510800 D2549010511000 D2549010511400 D2549010511600
D2549010511800 D2549010512000 D2549010512200 D2549010512400 D2549010512600
D2549010513000 D2549010513400 D2549010513600 D2549010513800 D2549010514000
D2549010514400 D2549010514600 D2549010514800 D2549010600000 D2549010600200
D2549010600400 D2549010600600 D2549010600800 D2549010601200 D2549010601400
D2549010601600 D2549010601800 D2549010602000 D2549010602200 D2549010602400
D2549010602600 D2549010602800 D2549010603000 D2549010603200 D2549010603400
D2549010603600 D2549010603800 D2549010604000 D2549010604200 D2549010604400
D2549010604600 D2549010604800 D2549010605000 D2549010605200 D2549010605600
D2549010605800 D2549010606000 D2549010606200 D2549010606400 D2549010606600
D2549010606800 D2549010607000 D2549010607200 D2549010607600 D2549010607800
D2549010608200 D2549010608400 D2549010608600 D2549010608800 D2549010609200
D2549010609400 D2549010609600 D2549010609800 D2549010610200 D2549010610400
D2549010610800 D2549010611000 D2549010611200 D2549010611400 D2549010611800
D2549010612200 D2549010612400 D2549010612600 D2549010613000 D2549010613200
D2549010613400 D2549010614200 D2549010614400 D2549010614800 D2549020400000
D2549020400200 D2549020400400 D2549020404200 D2549020404400 D2549020404600
D2549020404800 D2549020405000 D2549020405200 D2549020405400 D2549020405600
D2549020405800 D2549020406200 D2549020500000 D2549020500200 D2549020500400
D2549020500600 D2549020500800 D2549020501000 D2549020501200 D2549020501400
D2549020501600 D2549020501800 D2549020502000 D2549020502200 D2549020502400
D2549020502600 D2549020502800 D2549020503000 D2549020503200 D2549020503400
D2549020503600 D2549020503800 D2549020504000 D2549020504200 D2549020504400
D2549020504600 D2549020504800 D2549020505000 D2549020505200 D2549020505400
D2549020505600 D2549020505800 D2549020506000 D2549020506200 D2549020506400
D2549020506600 D2549020506800 D2549020507000 D2549020507200 D2549020507400
D2549020507600 D2549020507800 D2549020508000 D2549020508200 D2549020508400
D2549020508600 D2549020508800 D2549020509000 D2549020509200 D2549020509600
D2549020509800 D2549020510400 D2549020510600 D2549020510800 D2549020511000
D2549020511200 D2549020511800 D2549020512000 D2549020512200 D2549020512400
D2549020512600 D2549020512800 D2549020513000 D2549020513200 D2549020513400
D2549020513600 D2549020513800 D2549020514000 D2549020514200 D2549020514400
D2549020514600 D2549020514800 D2549020600200 D2549020600400 D2549020600800
D2549020601000 D2549020601200 D2549020601400 D2549020601600 D2549020601800
D2549020602000 D2549020602200 D2549020602400 D2549020602600 D2549020602800
D2549020603000 D2549020603400 D2549020603600 D2549020603800 D2549020604000

D2549020604200 D2549020604400 D2549020604600 D2549020604800 D2549020605000
D2549020605200 D2549020605400 D2549020605600 D2549020605800 D2549020606400
D2549020606600 D2549020606800 D2549020607000 D2549020607200 D2549020607400
D2549020607600 D2549020607800 D2549020608200 D2549020608400 D2549020608600
D2549020609000 D2549020609400 D2549020609600 D2549020609800 D2549020610000
D2549020610200 D2549020610400 D2549020610600 D2549020610800 D2549020611000
D2549020611200 D2549020611400 D2549020611600 D2549020611800 D2549020612200
D2549020612400 D2549020612600 D2549020612800 D2549020613000 D2549020613200
D2549020613600 D2549020613800 D2549020614000 D2549020614400 D2549020614600
D2549020614800 D2549020700000 D2549020700200 D2549020700400 D2549020700600
D2549020700800 D2549020701000 D2549020701200 D2549020701400 D2549020701600
D2549020701800 D2549020702000 D2549020702200 D2549020702400 D2549020702600
D2549020703200 D2549020703400 D2549020703600 D2549020703800 D2549020704000
D2549020704200 D2549020704400 D2549020704800 D2549020705000 D2549020705200
D2549020705400 D2549020705600 D2549020705800 D2549020706200 D2549020706600
D2549020706800 D2549020707000 D2549020707200 D2549020707400 D2549020708000
D2549020708200 D2549020708400 D2549020708600 D2549020709000 D2549020709200
D2549020709400 D2549020709600 D2549020709800 D2549020710000 D2549020710200
D2549020710400 D2549020710600 D2549020710800 D2549020711000 D2549020711200
D2549020711400 D2549020711600 D2549020712000 D2549020712200 D2549020712400
D2549020712600 D2549020712800 D2549020713000 D2549020713200 D2549020713400
D2549020713600 D2549020713800 D2549020714000 D2549020714400 D2549020714600
D2549020800200 D2549020800400 D2549020800600 D2549020800800 D2549020801000
D2549020801200 D2549020801400 D2549020801600 D2549020801800 D2549020802000
D2549020802200 D2549020802400 D2549020802800 D2549020803000 D2549020803200
D2549020803400 D2549020803600 D2549020803800 D2549020804000 D2549020804200
D2549020804800 D2549020805000 D2549020805200 D2549020805400 D2549020805800
D2549020806000 D2549020806200 D2549020806400 D2549020806600 D2549020806800
D2549020807000 D2549020807400 D2549020807600 D2549020807800 D2549020808200
D2549020808600 D2549020808800 D2549020809000 D2549020809400 D2549020809800
D2549020810000 D2549020810200 D2549020810400 D2549020810600 D2549020810800
D2549020811200 D2549020811400 D2549020811600 D2549020811800 D2549020812000
D2549020812200 D2549020812400 D2549020812600 D2549020812800 D2549020813000
D2549020813200 D2549020813400 D2549020813600 D2549020813800 D2549020814000
D2549020814200 D2549020814400 D2549020814600 D2549020814800 D2549030400000
D2549030400200 D2549030400400 D2549030400600 D2549030401000 D2549030401200
D2549030401400 D2549030401600 D2549030401800 D2549030402000 D2549030402200
D2549030402400 D2549030402600 D2549030402800 D2549030403000 D2549030403400
D2549030403600 D2549030403800 D2549030404000 D2549030404200 D2549030404400
D2549030404600 D2549030404800 D2549030405000 D2549030405200 D2549030405400
D2549030405600 D2549030405800 D2549030406000 D2549030406400 D2549030406600
D2549030406800 D2549030407000 D2549030407200 D2549030407400 D2549030407600
D2549030407800 D2549030408000 D2549030408200 D2549030408400 D2549030408600
D2549030409800 D2549030410400 D2549030500200 D2549030500400 D2549030500600
D2549030500800 D2549030501000 D2549030501200 D2549030501400 D2549030501600
D2549030501800 D2549030502000 D2549030502200 D2549030502400 D2549030502600
D2549030502800 D2549030503000 D2549030503200 D2549030503400 D2549030503600

D2549030503800 D2549030504000 D2549030504200 D2549030504600 D2549030504800
D2549030505200 D2549030505400 D2549030505600 D2549030505800 D2549030506200
D2549030506400 D2549030506600 D2549030506800 D2549030507000 D2549030507200
D2549030507400 D2549030507600 D2549030507800 D2549030508000 D2549030508200
D2549030508600 D2549030508800 D2549030509000 D2549030509200 D2549030509400
D2549030509600 D2549030509800 D2549030510200 D2549030510400 D2549030510600
D2549030510800 D2549030511000 D2549030511200 D2549030511400 D2549030511600
D2549030511800 D2549030512000 D2549030512200 D2549030512400 D2549030512800
D2549030513000 D2549030513200 D2549030513400 D2549030513600 D2549030513800
D2549030514000 D2549030514200 D2549030514400 D2549030514600 D2549030514800
D2549030600000 D2549030600200 D2549030600400 D2549030600600 D2549030600800
D2549030601000 D2549030601200 D2549030601600 D2549030601800 D2549030602000
D2549030602400 D2549030602600 D2549030602800 D2549030603000 D2549030603200
D2549030603400 D2549030603600 D2549030603800 D2549030604200 D2549030604600
D2549030604800 D2549030605000 D2549030605200 D2549030605400 D2549030605600
D2549030605800 D2549030606000 D2549030606200 D2549030606400 D2549030606600
D2549030606800 D2549030607000 D2549030607200 D2549030607400 D2549030607600
D2549030607800 D2549030608000 D2549030608400 D2549030608600 D2549030608800
D2549030609000 D2549030609200 D2549030609800 D2549030610000 D2549030610200
D2549030610400 D2549030610600 D2549030611000 D2549030611200 D2549030611400
D2549030611600 D2549030611800 D2549030612000 D2549030612200 D2549030612400
D2549030612600 D2549030612800 D2549030613200 D2549030613400 D2549030613600
D2549030613800 D2549030614000 D2549030614200 D2549030614400 D2549030614600
D2549030614800 D2549040500200 D2549040500600 R225401107-000 R225401115-000
R225401115-002 R225401128-000 R225401133-000 R225401134-000 R225401134-002
R225401134-004 R225401134-006 R225401134-008 R225401134-010 R225401134-012
R225401134-016 R225401134-018 R225401134-020 R225401134-022 R225401134-024
R225401134-026 R225401134-028 R225401134-030 R225401134-032 R225401134-034
R225401134-036 R225401136-000 R225401136-004 R225401136-010 R225401136-016
R225401136-018 R225401136-020 R225401136-022 R225401137-000 R225401137-002
R225401137-004 R225401137-006 R225401137-008 R225401137-010 R225401137-012
R225401137-014 R225401137-016 R225401139-000 R225401142-000 R225401142-002
R225401145-000 R225401145-002 R225401145-004 R225401145-006 R225401145-008
R225401145-010 R225401145-012 R225401145-014 R225401146-000 R225401146-002
R225401152-000 R225401152-002 R225401152-004 R225401152-006 R225401152-008
R225401153-000 R225401159-000 R225401168-000 R225401168-002 R225401168-004
R225401168-006 R225401168-008 R225401168-010 R225401168-012 R225401168-014
R225401168-016 R225401168-018 R225401168-020 R225401168-022 R225401168-024
R225401168-026 R225401168-028 R225401172-000 R225401172-002 R225401172-004
R225401172-006 R225401172-008 R225401172-010 R225401172-012 R225401172-014
R225401172-016 R225401172-018 R225401175-000 R225401175-002 R225401176-000
R225401183-000 R225401183-002 R225401183-008 R225401188-000 R225401188-002
R225401188-004 R225401188-006 R225401195-000 R225401196-000 R225401196-002
R225401196-004 R225401196-006 R225401196-008 R225401196-010 R225401196-012
R225401196-014 R225401196-016 R225401196-034 R225401196-036 R225401196-038
R225401196-040 R225401196-044 R225401196-046 R225401196-048 R225401196-050
R225401196-052 R225401196-054 R225401196-056 R225401196-058 R225401196-060

R225401196-062 R225401199-000 R225401199-002 R225401199-004 R225401199-006 R225401199-008 R225401199-010 R225401600-000 R225401600-002 R225401600-004 R225401603-000 R225401605-000 R225401605-002 R225401609-000 R225401611-006 R225401611-008 R225401611-010 R225401611-012 R225401613-000 R225401614-000 R225401618-000 R225401618-002 R225401619-000 R225401619-002 R225401622-000 R225401622-002 R225401625-000 R225401629-000 R225401629-002 R225401639-000 R225401639-002 R225401643-000 R225401643-002 R225401643-004 R225401646-000 R225401647-000 R225401648-000 R225401648-002 R225401656-000 R225401656-002 R225401662-000 R225401662-002 R225401673-000 R225401693-000

70. Removal of the Door

A. General

A complete disassembly of the component is not necessary and not recommended.

Do not disassemble the component more than it is necessary for:

- Cleaning
- Visual Inspection
- Replacement of defective parts.

B. Job Set-up Information

(1) Consumable Materials

REFERENCE	DESIGNATION
08-007	Sealant, High Temperature

Table 3331
Consumable Materials

(2) Fixtures, Tools, Test and Support Equipment

REFERENCE	DESIGNATION
	hot air blower

Table 3332
Fixtures, Tools, Test and Support Equipment

C. Procedure

WARNING: **BE CAREFUL WHEN YOU USE SOLVENTS/CLEANING AGENTS, SEALANTS AND OTHER MATERIALS. OBEY THE MATERIAL MANUFACTURER'S INSTRUCTIONS AND THE LOCAL REGULATIONS. MAKE SURE THAT THERE IS A GOOD FLOW OF AIR THROUGH THE WORK AREA. DO NOT BREATHE THE FUMES. DO NOT SMOKE. DO NOT USE THESE MATERIALS NEAR A FLAME, SPARKS OR SOURCES OF HEAT. USE PROTECTIVE CLOTHING, GOGGLES AND GLOVES. IF YOU GET ONE OF THESE MATERIALS ON YOUR SKIN OR IN YOUR EYES, FLUSH IT AWAY WITH A FLOW OF CLEAN WATER. IF YOU GET ONE OF THESE MATERIALS IN YOUR MOUTH, GET IMMEDIATE MEDICAL AID. IN GENERAL, THESE MATERIALS ARE POISONOUS, FLAMMABLE AND SKIN IRRITANTS.**

CAUTION: **DO ALL THE WORK ON A CLEAN, SOFT SURFACE TO PREVENT DAMAGE TO THE COMPONENTS.**

SUB TASK 25-41-51-000-074-A01

D2547161903000 D2549010400200 D2549010400400 D2549010400600
D2549010400800 D2549010403000 D2549010500000 D2549010500400
D2549010500600 D2549010500800 D2549010501000 D2549010501200
D2549010501400 D2549010501600 D2549010501800 D2549010502000
D2549010502200 D2549010502400 D2549010502600 D2549010502800
D2549010503200 D2549010503400 D2549010503600 D2549010503800
D2549010504400 D2549010504600 D2549010505000 D2549010505200
D2549010505400 D2549010505600 D2549010505800 D2549010506000
D2549010506200 D2549010506400 D2549010506800 D2549010507000
D2549010507200 D2549010507400 D2549010507600 D2549010507800
D2549010508000 D2549010508200 D2549010508600 D2549010508800
D2549010509200 D2549010509400 D2549010509600 D2549010509800
D2549010510000 D2549010510400 D2549010510600 D2549010510800
D2549010511000 D2549010511400 D2549010511600 D2549010511800
D2549010512000 D2549010512200 D2549010512400 D2549010512600
D2549010513000 D2549010513400 D2549010513600 D2549010513800
D2549010514000 D2549010514400 D2549010514600 D2549010514800
D2549010600000 D2549010600200 D2549010600400 D2549010600600
D2549010600800 D2549010601200 D2549010601400 D2549010601600
D2549010601800 D2549010602000 D2549010602200 D2549010602400
D2549010602600 D2549010602800 D2549010603000 D2549010603200
D2549010603400 D2549010603600 D2549010603800 D2549010604000
D2549010604200 D2549010604400 D2549010604600 D2549010604800
D2549010605000 D2549010605200 D2549010605600 D2549010605800
D2549010606000 D2549010606200 D2549010606400 D2549010606600
D2549010606800 D2549010607000 D2549010607200 D2549010607600
D2549010607800 D2549010608200 D2549010608400 D2549010608600
D2549010608800 D2549010609200 D2549010609400 D2549010609600
D2549010609800 D2549010610200 D2549010610400 D2549010610800
D2549010611000 D2549010611200 D2549010611400 D2549010611800

D2549010612200 D2549010612400 D2549010612600 D2549010613000
D2549010613200 D2549010613400 D2549010614200 D2549010614400
D2549010614800 D2549020400000 D2549020400200 D2549020400400
D2549020404200 D2549020404400 D2549020404600 D2549020404800
D2549020405000 D2549020405200 D2549020405400 D2549020405600
D2549020405800 D2549020406200 D2549020500000 D2549020500200
D2549020500400 D2549020500600 D2549020500800 D2549020501000
D2549020501200 D2549020501400 D2549020501600 D2549020501800
D2549020502000 D2549020502200 D2549020502400 D2549020502600
D2549020502800 D2549020503000 D2549020503200 D2549020503400
D2549020503600 D2549020503800 D2549020504000 D2549020504200
D2549020504400 D2549020504600 D2549020504800 D2549020505000
D2549020505200 D2549020505400 D2549020505600 D2549020505800
D2549020506000 D2549020506200 D2549020506400 D2549020506600
D2549020506800 D2549020507000 D2549020507200 D2549020507400
D2549020507600 D2549020507800 D2549020508000 D2549020508200
D2549020508400 D2549020508600 D2549020508800 D2549020509000
D2549020509200 D2549020509600 D2549020509800 D2549020510400
D2549020510600 D2549020510800 D2549020511000 D2549020511200
D2549020511800 D2549020512000 D2549020512200 D2549020512400
D2549020512600 D2549020512800 D2549020513000 D2549020513200
D2549020513400 D2549020513600 D2549020513800 D2549020514000
D2549020514200 D2549020514400 D2549020514600 D2549020514800
D2549020600200 D2549020600400 D2549020600800 D2549020601000
D2549020601200 D2549020601400 D2549020601600 D2549020601800
D2549020602000 D2549020602200 D2549020602400 D2549020602600
D2549020602800 D2549020603000 D2549020603400 D2549020603600
D2549020603800 D2549020604000 D2549020604200 D2549020604400
D2549020604600 D2549020604800 D2549020605000 D2549020605200
D2549020605400 D2549020605600 D2549020605800 D2549020606400
D2549020606600 D2549020606800 D2549020607000 D2549020607200
D2549020607400 D2549020607600 D2549020607800 D2549020608200
D2549020608400 D2549020608600 D2549020609000 D2549020609400
D2549020609600 D2549020609800 D2549020610200 D2549020610400
D2549020610600 D2549020610800 D2549020611000 D2549020611200
D2549020611400 D2549020611600 D2549020611800 D2549020612200
D2549020612400 D2549020612600 D2549020612800 D2549020613000
D2549020613200 D2549020613600 D2549020613800 D2549020614000
D2549020614400 D2549020614600 D2549020614800 D2549020700000
D2549020700200 D2549020700400 D2549020700600 D2549020700800
D2549020701000 D2549020701200 D2549020701400 D2549020701600
D2549020701800 D2549020702000 D2549020702200 D2549020702400
D2549020702600 D2549020703200 D2549020703400 D2549020703600
D2549020703800 D2549020704000 D2549020704200 D2549020704400
D2549020704800 D2549020705000 D2549020705200 D2549020705400
D2549020705600 D2549020705800 D2549020706200 D2549020706600
D2549020706800 D2549020707000 D2549020707200 D2549020707400

D2549020708000 D2549020708200 D2549020708400 D2549020708600
D2549020709000 D2549020709200 D2549020709400 D2549020709600
D2549020709800 D2549020710000 D2549020710200 D2549020710400
D2549020710600 D2549020710800 D2549020711000 D2549020711200
D2549020711400 D2549020711600 D2549020712000 D2549020712200
D2549020712400 D2549020712600 D2549020712800 D2549020713000
D2549020713200 D2549020713400 D2549020713600 D2549020713800
D2549020714000 D2549020714400 D2549020714600 D2549020800200
D2549020800400 D2549020800600 D2549020800800 D2549020801000
D2549020801200 D2549020801400 D2549020801600 D2549020801800
D2549020802000 D2549020802200 D2549020802400 D2549020802800
D2549020803000 D2549020803200 D2549020803400 D2549020803600
D2549020803800 D2549020804000 D2549020804200 D2549020804800
D2549020805000 D2549020805200 D2549020805400 D2549020805800
D2549020806000 D2549020806200 D2549020806400 D2549020806600
D2549020806800 D2549020807000 D2549020807400 D2549020807600
D2549020807800 D2549020808200 D2549020808600 D2549020808800
D2549020809000 D2549020809400 D2549020809800 D2549020810000
D2549020810200 D2549020810400 D2549020810600 D2549020810800
D2549020811200 D2549020811400 D2549020811600 D2549020811800
D2549020812000 D2549020812200 D2549020812400 D2549020812600
D2549020812800 D2549020813000 D2549020813200 D2549020813400
D2549020813600 D2549020813800 D2549020814000 D2549020814200
D2549020814400 D2549020814600 D2549020814800 D2549030400000
D2549030400200 D2549030400400 D2549030400600 D2549030401000
D2549030401200 D2549030401400 D2549030401600 D2549030401800
D2549030402000 D2549030402200 D2549030402400 D2549030402600
D2549030402800 D2549030403000 D2549030403400 D2549030403600
D2549030403800 D2549030404000 D2549030404200 D2549030404400
D2549030404600 D2549030404800 D2549030405000 D2549030405200
D2549030405400 D2549030405600 D2549030405800 D2549030406000
D2549030406400 D2549030406600 D2549030406800 D2549030407000
D2549030407200 D2549030407400 D2549030407600 D2549030407800
D2549030408000 D2549030408200 D2549030408400 D2549030408600
D2549030409800 D2549030410400 D2549030500200 D2549030500400
D2549030500600 D2549030500800 D2549030501000 D2549030501200
D2549030501400 D2549030501600 D2549030501800 D2549030502000
D2549030502200 D2549030502400 D2549030502600 D2549030502800
D2549030503000 D2549030503200 D2549030503400 D2549030503600
D2549030503800 D2549030504000 D2549030504200 D2549030504600
D2549030504800 D2549030505200 D2549030505400 D2549030505600
D2549030505800 D2549030506200 D2549030506400 D2549030506600
D2549030506800 D2549030507000 D2549030507200 D2549030507400
D2549030507600 D2549030507800 D2549030508000 D2549030508200
D2549030508600 D2549030508800 D2549030509000 D2549030509200
D2549030509400 D2549030509600 D2549030509800 D2549030510200
D2549030510400 D2549030510600 D2549030510800 D2549030511000

D2549030511200 D2549030511400 D2549030511600 D2549030511800
D2549030512000 D2549030512200 D2549030512400 D2549030512800
D2549030513000 D2549030513200 D2549030513400 D2549030513600
D2549030513800 D2549030514000 D2549030514200 D2549030514400
D2549030514800 D2549030600000 D2549030600200 D2549030600400
D2549030600600 D2549030600800 D2549030601000 D2549030601200
D2549030601600 D2549030601800 D2549030602000 D2549030602400
D2549030602600 D2549030602800 D2549030603000 D2549030603200
D2549030603400 D2549030603600 D2549030603800 D2549030604200
D2549030604600 D2549030604800 D2549030605000 D2549030605200
D2549030605400 D2549030605600 D2549030605800 D2549030606000
D2549030606200 D2549030606400 D2549030606600 D2549030606800
D2549030607000 D2549030607200 D2549030607400 D2549030607600
D2549030607800 D2549030608000 D2549030608400 D2549030608600
D2549030608800 D2549030609000 D2549030609200 D2549030609800
D2549030610000 D2549030610200 D2549030610400 D2549030610600
D2549030611000 D2549030611200 D2549030611400 D2549030611600
D2549030611800 D2549030612000 D2549030612200 D2549030612400
D2549030612600 D2549030612800 D2549030613200 D2549030613400
D2549030613600 D2549030613800 D2549030614000 D2549030614200
D2549030614400 D2549030614600 D2549030614800 D2549040500200
D2549040500600 R225401107-000 R225401115-000 R225401115-002 R225401128-000
R225401133-000 R225401134-000 R225401134-002 R225401134-004 R225401134-006
R225401134-008 R225401134-010 R225401134-012 R225401134-016 R225401134-018
R225401134-020 R225401134-022 R225401134-024 R225401134-026 R225401134-028
R225401134-030 R225401134-032 R225401134-034 R225401134-036 R225401136-000
R225401136-004 R225401136-010 R225401136-016 R225401136-018 R225401136-020
R225401136-022 R225401137-000 R225401137-002 R225401137-004 R225401137-006
R225401137-008 R225401137-010 R225401137-012 R225401137-014 R225401137-016
R225401139-000 R225401142-000 R225401142-002 R225401145-000 R225401145-002
R225401145-004 R225401145-006 R225401145-008 R225401145-010 R225401145-012
R225401145-014 R225401146-000 R225401146-002 R225401152-000 R225401152-002
R225401152-004 R225401152-006 R225401152-008 R225401153-000 R225401159-000
R225401168-000 R225401168-002 R225401168-004 R225401168-006 R225401168-008
R225401168-010 R225401168-012 R225401168-014 R225401168-016 R225401168-018
R225401168-020 R225401168-022 R225401168-024 R225401168-026 R225401168-028
R225401172-000 R225401172-002 R225401172-004 R225401172-006 R225401172-008
R225401172-010 R225401172-012 R225401172-014 R225401172-016 R225401172-018
R225401175-000 R225401175-002 R225401176-000 R225401183-000 R225401183-002
R225401183-008 R225401188-000 R225401188-002 R225401188-004 R225401188-006
R225401195-000 R225401196-000 R225401196-002 R225401196-004 R225401196-006
R225401196-008 R225401196-010 R225401196-012 R225401196-014 R225401196-016
R225401196-034 R225401196-036 R225401196-038 R225401196-040 R225401196-044
R225401196-046 R225401196-048 R225401196-050 R225401196-052 R225401196-054
R225401196-056 R225401196-058 R225401196-060 R225401196-062 R225401199-000
R225401199-002 R225401199-004 R225401199-006 R225401199-008 R225401199-010
R225401600-000 R225401600-002 R225401600-004 R225401603-000 R225401605-

000 R225401605-002 R225401609-000 R225401611-006 R225401611-008 R225401611-010 R225401611-012 R225401613-000 R225401614-000 R225401618-000 R225401618-002 R225401619-000 R225401619-002 R225401622-000 R225401622-002 R225401625-000 R225401629-000 R225401629-002 R225401639-000 R225401639-002 R225401643-000 R225401643-002 R225401643-004 R225401646-000 R225401647-000 R225401648-000 R225401648-002 R225401656-000 R225401656-002 R225401662-000 R225401662-002 R225401673-000 R225401693-000

1. Removal of the Door (10-1), (11-1), (11A-1), (11B-1), (11C-1), (11D-1), (11E-1), (11F-1), (11G-1), (11H-1), (11J-1), (11K-1), (11L-1), (11M-1), (11N-1), (11P-1), (11Q-1), (11R-1)

NOTE: **See TABLE 3333 for the references for the replacement procedures of permanent installed parts.**

More data for bonded parts are given in column SEE REPAIR TASK. Use the data for the selection of the related repair solution.

IPL FIG. ITEM	COMPONENT PART NAME	IPL FIG. ITEM	REPLACEMENT PART NAME	SEE REPAIR TASK
10-001	Door Installation	10-040	Bumper	Replacement of the Bonded Parts Self Adhesive

Table 3333
Reference list for the replacement of permanent installed parts

(a) Remove the screws 10-050, the washers 10-060, the nuts 10-070, the hinges 11-010, 11A-010, 11B-010, 11C-010, 11D-010, 11E-010, 11F-010, 11G-010, 11H-010, 11J-010, 11K-010, 11L-010, 11M-010, 11N-010, 11P-010, 11Q-010 or 11R-010 and the single door assemblies 11-001, 11A-001, 11B-001, 11C-001, 11D-001, 11E-001, 11F-001, 11G-001, 11H-001, 11J-001, 11K-001, 11L-001, 11M-001, 11N-001, 11P-001, 11Q-001 or 11R-001 from the lavatory structure.

(b) Remove the screws 10-050, the section 10-010 and the nuts 10-070 from the lavatory structure.

(c) Remove the screws 10-080 and the sill 10-030 from the floor pan.

SUB TASK 25-41-51-000-074-B01
D2549020610000 D2549030514600

2. Removal of the Door (10-1), (11-1), (11A-1), (11B-1), (11C-1), (11D-1), (11E-1), (11F-1), (11G-1), (11H-1), (11J-1), (11K-1), (11L-1), (11M-1), (11N-1), (11P-1), (11Q-1), (11R-1)

NOTE: **See TABLE 3334 for the references for the replacement procedures of permanent installed parts.**

More data for bonded parts are given in column SEE REPAIR TASK. Use the data for the selection of the related repair solution.

IPL FIG. ITEM	COMPONENT PART NAME	IPL FIG. ITEM	REPLACEMENT PART NAME	SEE REPAIR TASK
10-001	Door Installation	10-040	Bumper	Replacement of the Bonded Parts Self Adhesive

Table 3334
Reference list for the replacement of permanent installed parts

(a) Remove the screws 10-050, the washers 10-060, the nuts 10-070, the hinges 11-010, 11A-010, 11B-010, 11C-010, 11D-010, 11E-010, 11F-010, 11G-010, 11H-010, 11J-010, 11K-010, 11L-010, 11M-010, 11N-010, 11P-010, 11Q-010 or 11R-010 and the single door assemblies 11-001, 11A-001, 11B-001, 11C-001, 11D-001, 11E-001, 11F-001, 11G-001, 11H-001, 11J-001, 11K-001, 11L-001, 11M-001, 11N-001, 11P-001, 11Q-001 or 11R-001 from the lavatory structure.

(b) Remove the screws 10-050, the section 10-010 and the nuts 10-070 from the lavatory structure.

(c) Remove the screws 10-080 and the sill 10-030 from the floor pan.

(d) Remove the screws 10-170, the nuts 10-190 and the single-door emergency-unlocking-device assembly 10-100 from the lavatory structure.

(e) Disassemble the single-door emergency-unlocking-device assembly 10-100 as follows:

WARNING: **BE CAREFUL WHEN YOU USE MATERIAL NO. 08-007 SEALANT, HIGH TEMPERATURE. OBEY THE MATERIAL MANUFACTURER'S INSTRUCTIONS.**

1 Remove the bolt 10-150 and the emergency unlocking-device strike 10-130 from the emergency unlocking-device housing 10-110.

NOTE: **If necessary use a hot air blower to heat up the Material No. 08-007 Sealant, High Temperature to remove the bolt 10-150.**

WARNING: **BE CAREFUL WHEN YOU USE MATERIAL NO. 08-007 SEALANT, HIGH TEMPERATURE. OBEY THE MATERIAL MANUFACTURER'S INSTRUCTIONS.**

2 Remove the pin 10-160, the snap catch 10-140 and the emergency unlocking-device pivot 10-120 from the emergency unlocking-device housing 10-110.

NOTE: **If necessary use a hot air blower to heat up the Material No. 08-007 Sealant, High Temperature to remove the snap catch 10-140 and the pin 10-160.**

(f) Remove the screws 10-170 and the plates 10-180 from the lavatory structure.

TASK 25-41-51-000-807-B01

D2547160900200 D2547160900400 D2549010400000 D2549010401000 D2549010401400
D2549010401600 D2549010401800 D2549010402000 D2549010402200 D2549010402400
D2549010402600 D2549010402800 D2549010403200 D2549010403400 D2549010403600
D2549010403800 D2549010404000 D2549010404200 D2549010404400 D2549010404600
D2549010404800 D2549010405000 D2549010405200 D2549010405400 D2549010405600
D2549010405800 D2549010406000 D2549010406200 D2549010406400 D2549010406800
D2549010407000 D2549010504200 D2549010504800 D2549010508400 D2549010509000
D2549010510200 D2549010511200 D2549010513200 D2549010514200 D2549010601000
D2549010607400 D2549010609000 D2549010610000 D2549010610600 D2549010611600
D2549010612000 D2549010613600 D2549010613800 D2549010614600 D2549020300000
D2549020300400 D2549020300600 D2549020300800 D2549020301000 D2549020301600
D2549020301800 D2549020302000 D2549020302800 D2549020400600 D2549020400800
D2549020401000 D2549020401200 D2549020401400 D2549020401600 D2549020402000
D2549020402200 D2549020402400 D2549020402600 D2549020403000 D2549020403200
D2549020403400 D2549020403600 D2549020403800 D2549020404000 D2549020406000
D2549020406400 D2549020406600 D2549020406800 D2549020407000 D2549020407200
D2549020407400 D2549020407600 D2549020407800 D2549020408000 D2549020408200
D2549020408600 D2549020408800 D2549020409000 D2549020409200 D2549020409400
D2549020409600 D2549020409800 D2549020410200 D2549020410400 D2549020410600
D2549020410800 D2549020411000 D2549020411200 D2549020411400 D2549020411600
D2549020411800 D2549020412000 D2549020412200 D2549020412400 D2549020412600
D2549020412800 D2549020413000 D2549020413200 D2549020413400 D2549020413600
D2549020413800 D2549020414000 D2549020414200 D2549020414600 D2549020414800
D2549020510000 D2549020511600 D2549020600000 D2549020603200 D2549020606000
D2549020608800 D2549020609200 D2549020612000 D2549020702800 D2549020704600
D2549020706000 D2549020706400 D2549020707600 D2549020707800 D2549020708800
D2549020800000 D2549020802600 D2549020804400 D2549020805600 D2549020807200
D2549020808400 D2549020809600 D2549030409000 D2549030409200 D2549030409400
D2549030409600 D2549030410000 D2549030410200 D2549030410600 D2549030410800
D2549030411200 D2549030411400 D2549030411600 D2549030411800 D2549030412000
D2549030412200 D2549030412400 D2549030412600 D2549030412800 D2549030413000
D2549030413200 D2549030413400 D2549030413600 D2549030414000 D2549030414200
D2549030414400 D2549030414600 D2549030414800 D2549030506000 D2549030508400
D2549030510000 D2549030601400 D2549030602200 D2549030604400 D2549030608200
D2549030700000 D2549030700200 D2549030700400 D2549030700600 D2549030700800
D2549030701000 D2549030701200 D2549030701400 D2549030701600 D2549030701800
D2549030702000 D2549030702200 D2549030702400 D2549030702600 D2549030702800
D2549030703000 D2549030703200 D2549030703400 D2549030703600 D2549030703800
D2549030704000 D2549030704200 D2549030704400 D2549030704600 D2549030704800
D2549030705200 D2549030705600 D2549040500400 D2549040500800 D2549040501000
D2549040501200 D2549040501400 D2549040501600 D2549040501800 D2549040502000
R225401107-002 R225401107-004 R225401134-014 R225401134-038 R225401136-006
R225401136-008 R225401136-012 R225401136-014 R225401136-024 R225401152-010
R225401160-000 R225401160-002 R225401183-004 R225401183-006 R225401192-000
R225401192-002 R225401196-018 R225401196-020 R225401196-022 R225401196-024
R225401196-042 R225401196-064 R225401196-066 R225401196-068 R225401196-070

R225401199-012 R225401602-000 R225401611-000 R225401611-014 R225401611-016 R225401611-018 R225401611-020 R225401624-000 R225401627-000 R225401627-002 R225401627-004 R225401643-006 R225401643-008 R225401646-002 R225401648-004 R225401648-006 R225401648-008 R225401649-000 R225401658-000 R225401671-000 R225401671-002 R225401673-002 R225401673-004 R225401673-006 R225401675-000 R225401676-000 R225401683-000 R225401685-000 R225401685-002 R225401688-000 R225401689-004 R225401689-006 R225401691-000 R225401691-002 R225401697-000 R225401697-002 R225401803-000 R225401803-002 R225401808-000 R225401811-000 R225401814-000

71. Removal of the Door

A. General

A complete disassembly of the component is not necessary and not recommended.

Do not disassemble the component more than it is necessary for:

- Cleaning
- Visual Inspection
- Replacement of defective parts.

B. Job Set-up Information

(1) Not applicable

C. Procedure

WARNING: **BE CAREFUL WHEN YOU USE SOLVENTS/CLEANING AGENTS, SEALANTS AND OTHER MATERIALS. OBEY THE MATERIAL MANUFACTURER'S INSTRUCTIONS AND THE LOCAL REGULATIONS. MAKE SURE THAT THERE IS A GOOD FLOW OF AIR THROUGH THE WORK AREA. DO NOT BREATHE THE FUMES. DO NOT SMOKE. DO NOT USE THESE MATERIALS NEAR A FLAME, SPARKS OR SOURCES OF HEAT. USE PROTECTIVE CLOTHING, GOGGLES AND GLOVES. IF YOU GET ONE OF THESE MATERIALS ON YOUR SKIN OR IN YOUR EYES, FLUSH IT AWAY WITH A FLOW OF CLEAN WATER. IF YOU GET ONE OF THESE MATERIALS IN YOUR MOUTH, GET IMMEDIATE MEDICAL AID. IN GENERAL, THESE MATERIALS ARE POISONOUS, FLAMMABLE AND SKIN IRRITANTS.**

CAUTION: **DO ALL THE WORK ON A CLEAN, SOFT SURFACE TO PREVENT DAMAGE TO THE COMPONENTS.**

SUB TASK 25-41-51-000-028-A01

1. Removal of the Door (10A-1), (11-1), (11A-1), (11B-1), (11C-1), (11D-1), (11E-1), (11F-1), (11G-1), (11H-1), (11J-1), (11K-1), (11L-1), (11M-1), (11N-1), (11P-1), (11Q-1), (11R-1)

NOTE: **See TABLE 3335 for the references for the replacement procedures of permanent installed parts.**

More data for bonded parts are given in column SEE REPAIR TASK. Use the data for the selection of the related repair solution.

IPL FIG. ITEM	COMPONENT PART NAME	IPL FIG. ITEM	REPLACEMENT PART NAME	SEE REPAIR TASK
10A-001	Door Installation	10A-040	Bumper	Replacement of the Bonded Parts Self Adhesive

Table 3335
Reference list for the replacement of permanent installed parts

(a) Remove the screws 10A-050, the washers 10A-060, the nuts 10A-070, the hinges 11-010, 11A-010, 11B-010, 11C-010, 11D-010, 11E-010, 11F-010, 11G-010, 11H-010, 11J-010, 11K-010, 11L-010, 11M-010, 11N-010, 11P-010, 11Q-010 or 11R-010 and the single door assemblies 11-001, 11A-001, 11B-001, 11C-001, 11D-001, 11E-001, 11F-001, 11G-001, 11H-001, 11J-001, 11K-001, 11L-001, 11M-001, 11N-001, 11P-001, 11Q-001 or 11R-001 from the lavatory structure.

(b) Remove the screws 10A-050, the section 10A-010 and the nuts 10A-070 from the lavatory structure.

(c) Remove the screws 10A-080, the spacer 10A-020 and the sill 10A-030 from the floor pan.

TASK 25-41-51-000-808-A01

D2549010500000 D2549010500400 D2549010500600 D2549010500800 D2549010501000 D2549010501200 D2549010501400 D2549010501600 D2549010501800 D2549010502000 D2549010502200 D2549010502400 D2549010502600 D2549010502800 D2549010503200 D2549010503400 D2549010503600 D2549010503800 D2549010505000 D2549010505200 D2549010505600 D2549010505800 D2549010506000 D2549010506200 D2549010506400 D2549010506800 D2549010507000 D2549010507200 D2549010507400 D2549010507600 D2549010508200 D2549010509200 D2549010511200 D2549020500000 D2549020500400 D2549020500600 D2549020500800 D2549020501000 D2549020501200 D2549020501400 D2549020501600 D2549020501800 D2549020502000 D2549020502400 D2549020502600 D2549020502800 D2549020503000 D2549020503200 D2549020503400 D2549020503800 D2549020504200 D2549020504400 D2549020504600 D2549020504800 D2549020505000 D2549020505200 D2549020505400 D2549020505800 D2549020506000 D2549020600000 D2549020600200 D2549020600800 D2549020602400 D2549020603000 D2549020603600 D2549020603800 D2549020604000 D2549030500200 D2549030500400 D2549030500600 D2549030500800 D2549030501000 D2549030501200 D2549030501400 D2549030501600 D2549030501800 D2549030502000 D2549030502200 D2549030502400 D2549030502800 D2549030503000 D2549030503200 R225401107-000 R225401107-002 R225401115-002 R225401139-000 R225401145-000 R225401146-000 R225401146-002 R225401188-000 R225401188-002 R225401188-004

72. Disassembly of the Door

A. General

A complete disassembly of the component is not necessary and not recommended.

Do not disassemble the component more than it is necessary for:

- Cleaning
- Visual Inspection
- Replacement of defective parts.

B. Job Set-up Information
(1) Consumable Materials

REFERENCE	DESIGNATION
08-007	Sealant, High Temperature
	FASTBOND 10 - Formica Bonding Rigid Vinyl

Table 3336
Consumable Materials

(2) Fixtures, Tools, Test and Support Equipment

REFERENCE	DESIGNATION
	hot air blower

Table 3337
Fixtures, Tools, Test and Support Equipment

C. Procedure

WARNING: **BE CAREFUL WHEN YOU USE SOLVENTS/CLEANING AGENTS, SEALANTS AND OTHER MATERIALS. OBEY THE MATERIAL MANUFACTURER'S INSTRUCTIONS AND THE LOCAL REGULATIONS. MAKE SURE THAT THERE IS A GOOD FLOW OF AIR THROUGH THE WORK AREA. DO NOT BREATHE THE FUMES. DO NOT SMOKE. DO NOT USE THESE MATERIALS NEAR A FLAME, SPARKS OR SOURCES OF HEAT. USE PROTECTIVE CLOTHING, GOGGLES AND GLOVES. IF YOU GET ONE OF THESE MATERIALS ON YOUR SKIN OR IN YOUR EYES, FLUSH IT AWAY WITH A FLOW OF CLEAN WATER. IF YOU GET ONE OF THESE MATERIALS IN YOUR MOUTH, GET IMMEDIATE MEDICAL AID. IN GENERAL, THESE MATERIALS ARE POISONOUS, FLAMMABLE AND SKIN IRRITANTS.**

CAUTION: **DO ALL THE WORK ON A CLEAN, SOFT SURFACE TO PREVENT DAMAGE TO THE COMPONENTS.**

SUB TASK 25-41-51-040-001-A01

D2549010500000 D2549010500400 D2549010500600 D2549010500800
D2549010501000 D2549010501200 D2549010501400 D2549010501600
D2549010501800 D2549010502000 D2549010502200 D2549010502400
D2549010502600 D2549010502800 D2549010503200 D2549010503400
D2549010503600 D2549010503800 D2549010505000 D2549010505200
D2549010505600 D2549010505800 D2549010506000 D2549010506200
D2549010506400 D2549010506800 D2549010507000 D2549010507200
D2549010507400 D2549010507600 D2549010508200 D2549010509200
D2549010511200 D2549020500000 D2549020500400 D2549020500600
D2549020500800 D2549020501000 D2549020501200 D2549020501400
D2549020501600 D2549020501800 D2549020502000 D2549020502400
D2549020502600 D2549020502800 D2549020503000 D2549020503200
D2549020503400 D2549020503800 D2549020504200 D2549020504400
D2549020504600 D2549020504800 D2549020505000 D2549020505200
D2549020505400 D2549020505800 D2549020506000 D2549020600000
D2549020600200 D2549020600800 D2549020602400 D2549020603000
D2549020603600 D2549020603800 D2549020604000 D2549030500200
D2549030500400 D2549030500600 D2549030501000 D2549030501200
D2549030501400 D2549030501600 D2549030501800 D2549030502200

D2549030502400 D2549030503000 D2549030503200 R225401107-000 R225401107-002 R225401115-002 R225401139-000 R225401145-000 R225401146-000 R225401146-002 R225401188-000 R225401188-002

1. Disassembly of the Door (11-1)

NOTE: **See TABLE 3338 for the references for the replacement procedures of permanent installed parts.**

More data for bonded parts are given in column SEE REPAIR TASK. Use the data for the selection of the related repair solution.

IPL FIG. ITEM	COMPONENT PART NAME	IPL FIG. ITEM	REPLACEMENT PART NAME	SEE REPAIR TASK
11-001	Single Door Assembly	11-130	Scuff Plate	Replacement of the Bonded Parts Material No. 08-553 FASTBOND 10 - Formica Bonding Rigid Vinyl

Table 3338
Reference list for the replacement of permanent installed parts

(a) Remove the screw 11-070 and the coat hook 11-080.

(b) Remove and disassemble the ashtray assemblies 11-110 as follows:

1 Remove the ashtray cover 11-113 from the ashtray case 11-115.

2 Remove the screws 11-040 from the ashtray case 11-115.

(c) Remove the screws 11-020, the washers 11-030 and the hinge 11-010.

(d) Disassemble the hinge 11-010 as follows:

WARNING: **BE CAREFUL WHEN YOU USE MATERIAL NO. 08-007 SEALANT, HIGH TEMPERATURE. OBEY THE MATERIAL MANUFACTURER'S INSTRUCTIONS.**

1 Remove the setscrews 11-015 from the hinge 11-010.

NOTE: **If necessary use a hot air blower to heat up the Material No. 08-007 Sealant, High Temperature to remove the setscrews 11-015.**

(e) Remove the screws 11-040 and the sections 11-050, 11-060.

(f) Remove the screws 11-020.

(g) Removal and Disassembly of the Lavatory Simple Door-Latch 11-090

1 Remove the knob 11-096 from the lock 11-092 and the inside face of the folding door assy with a spanner.

2 Turn the folding door assy over, lift the flap above the lock 11-092 and remove the screws that install the release system 11-094.

3 Remove the slider pin from the lock 11-092.

4 Remove the release system 11-094 and the lock 11-092.

(h) Remove the threaded bolt 11-100.

(i) Remove the screws 11-020 and the latch assembly 11-120 from the single door assembly 11-001.

NOTE: For further instructions, see CMMV 25-41-60_80477 (latch assembly).

(j) Remove the screws 11-150 and the air outlets 11-140.

SUB TASK 25-41-51-040-001-B01
D2549030500800 D2549030502000 D2549030502800 R225401188-004

2. Disassembly of the Door (11-1)

NOTE: **See TABLE 3339 for the references for the replacement procedures of permanent installed parts.**

More data for bonded parts are given in column SEE REPAIR TASK. Use the data for the selection of the related repair solution.

IPL FIG. ITEM	COMPONENT PART NAME	IPL FIG. ITEM	REPLACEMENT PART NAME	SEE REPAIR TASK
11-001	Single Door Assembly	11-130	Scuff Plate	Replacement of the Bonded Parts Material No. 08-553 FASTBOND 10 - Formica Bonding Rigid Vinyl

Table 3339
Reference list for the replacement of permanent installed parts

(a) Remove the screw 11-070 and the coat hook 11-080.

(b) Remove and disassemble the ashtray assemblies 11-110 as follows:

1 Remove the ashtray cover 11-113 from the ashtray case 11-115.

2 Remove the screws 11-040 from the ashtray case 11-115.

(c) Remove the screws 11-020, the washers 11-030 and the hinge 11-010.

(d) Disassemble the hinge 11-010 as follows:

WARNING: **BE CAREFUL WHEN YOU USE MATERIAL NO. 08-007 SEALANT, HIGH TEMPERATURE. OBEY THE MATERIAL MANUFACTURER'S INSTRUCTIONS.**

1 Remove the setscrews 11-015 from the hinge 11-010.

NOTE: **If necessary use a hot air blower to heat up the Material No. 08-007 Sealant, High Temperature to remove the setscrews 11-015.**

(e) Remove the screws 11-040 and the sections 11-050, 11-060.

(f) Remove the screws 11-020.

(g) Removal and Disassembly of the Lavatory Simple Door-Latch 11-090

1 Remove the knob 11-096 from the lock 11-092 and the inside face of the folding door assy with a spanner.

2 Turn the folding door assy over, lift the flap above the lock 11-092 and remove the screws that install the release system 11-094.

3 Remove the slider pin from the lock 11-092.

4 Remove the release system 11-094 and the lock 11-092.

(h) Remove the threaded bolt 11-100.

(i) Remove the screws 11-020 and the latch assembly 11-125 from the single door assembly 11-001.

(j) Remove the screws 11-150 and the air outlets 11-140.

TASK 25-41-51-000-808-B01
D2549010505400 D2549010508000 D2549010508600 D2549020504000 D2549020600400 D2549020601000 D2549020601400 D2549020601600 D2549020602000 D2549020602600 D2549020602800 D2549020603400 D2549020606400 D2549020607200 D2549030502600 D2549030503400 R225401128-000 R225401133-000 R225401134-000 R225401188-006

73. Disassembly of the Door

A. General

A complete disassembly of the component is not necessary and not recommended.

Do not disassemble the component more than it is necessary for:

- Cleaning
- Visual Inspection
- Replacement of defective parts.

B. Job Set-up Information
(1) Consumable Materials

REFERENCE	DESIGNATION
08-007	Sealant, High Temperature
	FASTBOND 10 - Formica Bonding Rigid Vinyl

Table 3340
Consumable Materials

(2) Fixtures, Tools, Test and Support Equipment

REFERENCE	DESIGNATION
	hot air blower

Table 3341
Fixtures, Tools, Test and Support Equipment

C. Procedure

WARNING: **BE CAREFUL WHEN YOU USE SOLVENTS/CLEANING AGENTS, SEALANTS AND OTHER MATERIALS. OBEY THE MATERIAL MANUFACTURER'S INSTRUCTIONS AND THE LOCAL REGULATIONS. MAKE SURE THAT THERE IS A GOOD FLOW OF AIR THROUGH THE WORK AREA. DO NOT BREATHE THE FUMES. DO NOT SMOKE. DO NOT USE THESE MATERIALS NEAR A FLAME, SPARKS OR SOURCES OF HEAT. USE PROTECTIVE CLOTHING, GOGGLES AND GLOVES. IF YOU GET ONE OF THESE MATERIALS ON YOUR SKIN OR IN YOUR EYES, FLUSH IT AWAY WITH A FLOW OF CLEAN WATER. IF YOU GET ONE OF THESE MATERIALS IN YOUR MOUTH, GET IMMEDIATE MEDICAL AID. IN GENERAL, THESE MATERIALS ARE POISONOUS, FLAMMABLE AND SKIN IRRITANTS.**

CAUTION: **DO ALL THE WORK ON A CLEAN, SOFT SURFACE TO PREVENT DAMAGE TO THE COMPONENTS.**

SUB TASK 25-41-51-040-111-A01
D2549020602000 D2549020602600 D2549020602800 D2549020607200
D2549030502600 D2549030503400 R225401134-000 R225401188-006

1. Disassembly of the Door (11A-1)

NOTE: **See TABLE 3342 for the references for the replacement procedures of permanent installed parts.**

More data for bonded parts are given in column SEE REPAIR TASK. Use the data for the selection of the related repair solution.

IPL FIG. ITEM	COMPONENT PART NAME	IPL FIG. ITEM	REPLACEMENT PART NAME	SEE REPAIR TASK
11A-001	Single Door Assembly	11A-130	Scuff Plate	Replacement of the Bonded Parts Material No. 08-553 FASTBOND 10 - Formica Bonding Rigid Vinyl

Table 3342
Reference list for the replacement of permanent installed parts

(a) Remove the screw 11A-070 and the coat hook 11A-080.

(b) Remove and disassemble the ashtray assemblies 11A-110 as follows:

1 Remove the ashtray cover 11A-113 from the ashtray case 11A-115.

2 Remove the screws 11A-040 from the ashtray case 11A-115.

(c) Remove the screws 11A-020, the washers 11A-030 and the hinge 11A-010.

(d) Disassemble the hinge 11A-010 as follows:

WARNING: BE CAREFUL WHEN YOU USE MATERIAL NO. 08-007 SEALANT, HIGH TEMPERATURE. OBEY THE MATERIAL MANUFACTURER'S INSTRUCTIONS.

1 Remove the setscrews 11A-015 from the hinge 11A-010.

NOTE: If necessary use a hot air blower to heat up the Material No. 08-007 Sealant, High Temperature to remove the setscrews 11A-015.

(e) Remove the screws 11A-040 and the sections 11A-050, 11A-060.

(f) Remove the screws 11A-020.

(g) Removal and Disassembly of the Lavatory Simple Door-Latch 11A-090

1 Remove the knob 11A-096 from the lock 11A-092 and the inside face of the folding door assy with a spanner.

2 Turn the folding door assy over, lift the flap above the lock 11A-092 and remove the screws that install the release system 11A-094.

3 Remove the slider pin from the lock 11A-092.

4 Remove the release system 11A-094 and the lock 11A-092.

(h) Remove the threaded bolt 11A-100.

(i) Remove the screws 11A-023 and the latch assembly 11A-120 from the single door assembly 11A-001.

NOTE: For further instructions, see CMMV 25-41-60_80477 (latch assembly).

(j) Remove the screws 11A-150 and the air outlets 11A-140.

SUB TASK 25-41-51-040-111-B01
D2549020504000 D2549020600400 R225401128-000

2. Disassembly of the Door (11A-1)

NOTE: **See TABLE 3343 for the references for the replacement procedures of permanent installed parts.**

More data for bonded parts are given in column SEE REPAIR TASK. Use the data for the selection of the related repair solution.

IPL FIG. ITEM	COMPONENT PART NAME	IPL FIG. ITEM	REPLACEMENT PART NAME	SEE REPAIR TASK
11A-001	Single Door Assembly	11A-130	Scuff Plate	Replacement of the Bonded Parts Material No. 08-553 FASTBOND 10 - Formica Bonding Rigid Vinyl

Table 3343
Reference list for the replacement of permanent installed parts

(a) Remove the screw 11A-070 and the coat hook 11A-080.

(b) Remove and disassemble the ashtray assemblies 11A-110 as follows:

1 Remove the ashtray cover 11A-113 from the ashtray case 11A-115.

2 Remove the screws 11A-040 from the ashtray case 11A-115.

(c) Remove the screws 11A-020, the washers 11A-030 and the hinge 11A-010.

(d) Remove the screws 11A-040 and the sections 11A-050, 11A-060.

(e) Remove the screws 11A-020.

(f) Removal and Disassembly of the Lavatory Simple Door-Latch 11A-090

1 Remove the knob 11A-096 from the lock 11A-092 and the inside face of the folding door assy with a spanner.

2 Turn the folding door assy over, lift the flap above the lock 11A-092 and remove the screws that install the release system 11A-094.

3 Remove the slider pin from the lock 11A-092.

4 Remove the release system 11A-094 and the lock 11A-092.

(g) Remove the threaded bolt 11A-100.

(h) Remove the screws 11A-023 and the latch assembly 11A-120 from the single door assembly 11A-001.

NOTE: For further instructions, see CMMV 25-41-60_80477 (latch assembly).

(i) Remove the screws 11A-150 and the air outlets 11A-140.

SUB TASK 25-41-51-040-111-C01
D2549010505400 D2549010508000 D2549010508600 D2549020601000 D2549020601400 D2549020601600 D2549020603400 D2549020606400 R225401133-000

3. Disassembly of the Door (11A-1)

NOTE: See TABLE 3344 for the references for the replacement procedures of permanent installed parts.

More data for bonded parts are given in column SEE REPAIR TASK. Use the data for the selection of the related repair solution.

IPL FIG. ITEM	COMPONENT PART NAME	IPL FIG. ITEM	REPLACEMENT PART NAME	SEE REPAIR TASK
11A-001	Single Door Assembly	11A-130	Scuff Plate	Replacement of the Bonded Parts Material No. 08-553 FASTBOND 10 - Formica Bonding Rigid Vinyl

Table 3344
Reference list for the replacement of permanent installed parts

(a) Remove the screw 11A-070 and the coat hook 11A-080.

(b) Remove and disassemble the ashtray assemblies 11A-110 as follows:

1 Remove the ashtray cover 11A-113 from the ashtray case 11A-115.

2 Remove the screws 11A-040 from the ashtray case 11A-115.

(c) Remove the screws 11A-020, the washers 11A-030 and the hinge 11A-010.

(d) Disassemble the hinge 11A-010 as follows:

WARNING: BE CAREFUL WHEN YOU USE MATERIAL NO. 08-007 SEALANT, HIGH TEMPERATURE. OBEY THE MATERIAL MANUFACTURER'S INSTRUCTIONS.

1 Remove the setscrews 11A-015 from the hinge 11A-010.

NOTE: If necessary use a hot air blower to heat up the Material No. 08-007 Sealant, High Temperature to remove the setscrews 11A-015.

(e) Remove the screws 11A-040 and the sections 11A-050, 11A-060.

(f) Remove the screws 11A-020.

(g) Removal and Disassembly of the Lavatory Simple Door-Latch 11A-090

1 Remove the knob 11A-096 from the lock 11A-092 and the inside face of the folding door assy with a spanner.

2 Turn the folding door assy over, lift the flap above the lock 11A-092 and remove the screws that install the release system 11A-094.

3 Remove the slider pin from the lock 11A-092.

4 Remove the release system 11A-094 and the lock 11A-092.

(h) Remove the threaded bolt 11A-100.

(i) Remove the screws 11A-025 and the latch assembly 11A-125 from the single door assembly 11A-001.

(j) Remove the screws 11A-150 and the air outlets 11A-140.

TASK 25-41-51-000-808-C01
D2549010509400 D2549010509600 D2549010509800 D2549010510000 D2549010510400 D2549010510800 D2549010511000 D2549010511600 D2549010512000 D2549010512200 D2549010512400 D2549010600000 D2549010613600 D2549020400000 D2549020404000 D2549020410600 D2549020413800 D2549020506200 D2549020506400 D2549020513600 D2549020604200 D2549020605200 D2549020606600 D2549020607000 D2549020607800 D2549020610600 D2549020611000 D2549020611200 D2549020611400 D2549020612800 D2549020702600 D2549020703200 D2549030504000 D2549030504600 D2549030504800 D2549030505200 D2549030505400 D2549030505600 D2549030506400 D2549030506600 R225401137-000 R225401137-002 R225401137-010 R225401137-012 R225401159-000 R225401176-000

74. Disassembly of the Door

A. General

A complete disassembly of the component is not necessary and not recommended.

Do not disassemble the component more than it is necessary for:

- Cleaning
- Visual Inspection
- Replacement of defective parts.

B. Job Set-up Information
(1) Consumable Materials

REFERENCE	DESIGNATION
08-007	Sealant, High Temperature
	FASTBOND 10 - Formica Bonding Rigid Vinyl

Table 3345
Consumable Materials

(2) Fixtures, Tools, Test and Support Equipment

REFERENCE	DESIGNATION
	hot air blower

Table 3346
Fixtures, Tools, Test and Support Equipment

C. Procedure

WARNING: **BE CAREFUL WHEN YOU USE SOLVENTS/CLEANING AGENTS, SEALANTS AND OTHER MATERIALS. OBEY THE MATERIAL MANUFACTURER'S INSTRUCTIONS AND THE LOCAL REGULATIONS. MAKE SURE THAT THERE IS A GOOD FLOW OF AIR THROUGH THE WORK AREA. DO NOT BREATHE THE FUMES. DO NOT SMOKE. DO NOT USE THESE MATERIALS NEAR A FLAME, SPARKS OR SOURCES OF HEAT. USE PROTECTIVE CLOTHING, GOGGLES AND GLOVES. IF YOU GET ONE OF THESE MATERIALS ON YOUR SKIN OR IN YOUR EYES, FLUSH IT AWAY WITH A FLOW OF CLEAN WATER. IF YOU GET ONE OF THESE MATERIALS IN YOUR MOUTH, GET IMMEDIATE MEDICAL AID. IN GENERAL, THESE MATERIALS ARE POISONOUS, FLAMMABLE AND SKIN IRRITANTS.**

CAUTION: **DO ALL THE WORK ON A CLEAN, SOFT SURFACE TO PREVENT DAMAGE TO THE COMPONENTS.**

SUB TASK 25-41-51-040-112-A01
D2549010509600 D2549010510400 D2549010613600 D2549020400000 D2549020410600 D2549020413800 D2549030504000

1. Disassembly of the Door (11B-1)

NOTE: **See TABLE 3347 for the references for the replacement procedures of permanent installed parts.**

More data for bonded parts are given in column SEE REPAIR TASK. Use the data for the selection of the related repair solution.

IPL FIG. ITEM	COMPONENT PART NAME	IPL FIG. ITEM	REPLACEMENT PART NAME	SEE REPAIR TASK
11B-001	Single Door Assembly	11B-150	Scuff Plate	Replacement of the Bonded Parts Material No. 08-553 FASTBOND 10 - Formica Bonding Rigid Vinyl

Table 3347
Reference list for the replacement of permanent installed parts

(a) Remove the screw 11B-080 and the coat hook 11B-090.

(b) Remove and disassemble the ashtray assemblies 11B-130 as follows:

1 Remove the ashtray cover 11B-133 from the ashtray case 11B-135.

2 Remove the screws 11B-050 from the ashtray case 11B-135.

(c) Remove the screws 11B-031, the washers 11B-040 and the hinge 11B-010.

(d) Disassemble the hinge 11B-010 as follows:

WARNING: **BE CAREFUL WHEN YOU USE MATERIAL NO. 08-007 SEALANT, HIGH TEMPERATURE. OBEY THE MATERIAL MANUFACTURER'S INSTRUCTIONS.**

1 Remove the setscrews 11B-020 from the hinge 11B-010.

NOTE: **If necessary use a hot air blower to heat up the Material No. 08-007 Sealant, High Temperature to remove the setscrews 11B-020.**

(e) Remove the screws 11B-050 and the sections 11B-060, 11B-070.

(f) Remove the screws 11B-030.

(g) Removal and Disassembly of the Lavatory Simple Door-Latch 11B-100

1 Remove the knob 11B-106 from the lock 11B-102 and the inside face of the folding door assy with a spanner.

2 Turn the folding door assy over, lift the flap above the lock 11B-102 and remove the screws that install the release system 11B-104.

3 Remove the slider pin from the lock 11B-102.

4 Remove the release system 11B-104 and the lock 11B-102.

(h) Remove the threaded bolt 11B-120.

(i) Remove the latch assembly 11B-145 from the single door assembly 11B-001.

(j) Remove the screws 11B-170 and the air outlets 11B-160.

SUB TASK 25-41-51-040-112-B01

D2549010509400 D2549010509800 D2549010510000 D2549010510800 D2549010511000 D2549010511600 D2549010512000 D2549010512200 D2549010512400 D2549010600000 D2549020404000 D2549020506200 D2549020506400 D2549020513600 D2549020604200 D2549020605200 D2549020607000 D2549020607800 D2549020610600 D2549020611000 D2549020611200 D2549020611400 D2549020612800 D2549020702600 D2549020703200 D2549030504600 D2549030504800 D2549030505200 D2549030505400 D2549030505600 D2549030506400 D2549030506600 R225401137-000 R225401137-002 R225401137-010 R225401137-012 R225401159-000 R225401176-000

2. Disassembly of the Door (11B-1)

NOTE: **See TABLE 3348 for the references for the replacement procedures of permanent installed parts.**

More data for bonded parts are given in column SEE REPAIR TASK. Use the data for the selection of the related repair solution.

IPL FIG. ITEM	COMPONENT PART NAME	IPL FIG. ITEM	REPLACEMENT PART NAME	SEE REPAIR TASK
11B-001	Single Door Assembly	11B-150	Scuff Plate	Replacement of the Bonded Parts Material No. 08-553 FASTBOND 10 - Formica Bonding Rigid Vinyl

Table 3348
Reference list for the replacement of permanent installed parts

(a) Remove the screw 11B-080 and the coat hook 11B-090.

(b) Remove and disassemble the ashtray assemblies 11B-130 as follows:

1 Remove the ashtray cover 11B-133 from the ashtray case 11B-135.

2 Remove the screws 11B-050 from the ashtray case 11B-135.

(c) Remove the screws 11B-031, the washers 11B-040 and the hinge 11B-010.

(d) Disassemble the hinge 11B-010 as follows:

WARNING: **BE CAREFUL WHEN YOU USE MATERIAL NO. 08-007 SEALANT, HIGH TEMPERATURE. OBEY THE MATERIAL MANUFACTURER'S INSTRUCTIONS.**

1 Remove the setscrews 11B-020 from the hinge 11B-010.

NOTE: **If necessary use a hot air blower to heat up the Material No. 08-007 Sealant, High Temperature to remove the setscrews 11B-020.**

(e) Remove the screws 11B-050 and the sections 11B-060, 11B-070.

(f) Remove the screws 11B-100.

(g) Removal and Disassembly of the Lavatory Simple Door-Latch 11B-100

1 Remove the knob 11B-106 from the lock 11B-102 and the inside face of the folding door assy with a spanner.

2 Turn the folding door assy over, lift the flap above the lock 11B-102 and remove the screws that install the release system 11B-104.

3 Remove the slider pin from the lock 11B-102.

4 Remove the release system 11B-104 and the lock 11B-102.

(h) Remove the threaded bolt 11B-120.

(i) Remove the latch assembly 11B-140 from the single door assembly 11B-001.

NOTE: For further instructions, see CMMV 25-41-60_80477 (latch assembly).

(j) Remove the screws 11B-170 and the air outlets 11B-160.

SUB TASK 25-41-51-040-112-C01
D2549020606600

3. Disassembly of the Door (11B-1)

NOTE: See TABLE 3349 for the references for the replacement procedures of permanent installed parts.
More data for bonded parts are given in column SEE REPAIR TASK. Use the data for the selection of the related repair solution.

IPL FIG. ITEM	COMPONENT PART NAME	IPL FIG. ITEM	REPLACEMENT PART NAME	SEE REPAIR TASK
11B-001	Single Door Assembly	11B-150	Scuff Plate	Replacement of the Bonded Parts Material No. 08-553 FASTBOND 10 - Formica Bonding Rigid Vinyl

Table 3349
Reference list for the replacement of permanent installed parts

(a) Remove the screw 11B-080 and the coat hook 11B-090.

(b) Remove and disassemble the ashtray assemblies 11B-130 as follows:

1 Remove the ashtray cover 11B-133 from the ashtray case 11B-135.

2 Remove the screws 11B-050 from the ashtray case 11B-135.

(c) Remove the screws 11B-030, the washers 11B-040 and the hinge 11B-010.

(d) Disassemble the hinge 11B-010 as follows:

WARNING: BE CAREFUL WHEN YOU USE MATERIAL NO. 08-007 SEALANT, HIGH TEMPERATURE. OBEY THE MATERIAL MANUFACTURER'S INSTRUCTIONS.

1 Remove the setscrews 11B-020 from the hinge 11B-010.

NOTE: If necessary use a hot air blower to heat up the Material No. 08-007 Sealant, High Temperature to remove the setscrews 11B-020.

(e) Remove the screws 11B-050 and the sections 11B-060, 11B-070.

(f) Remove the screws 11B-030.

(g) Removal and Disassembly of the Lavatory Simple Door-Latch 11B-100

1 Remove the knob 11B-106 from the lock 11B-102 and the inside face of the folding door assy with a spanner.

2 Turn the folding door assy over, lift the flap above the lock 11B-102 and remove the screws that install the release system 11B-104.

3 Remove the slider pin from the lock 11B-102.

4 Remove the release system 11B-104 and the lock 11B-102.

(h) Remove the threaded bolt 11B-120.

(i) Remove the screws 11B-030 and the latch assembly 11B-140 from the single door assembly 11B-001.

NOTE: For further instructions, see CMMV 25-41-60_80477 (latch assembly).

(j) Remove the screws 11B-170 and the air outlets 11B-160.

TASK 25-41-51-000-808-D01
D2549010510200 D2549010510600 D2549010511400 D2549010511800 D2549010513000 D2549010513400 D2549010513600 D2549020506800 D2549020604400 D2549020604800 D2549020605000 D2549020605600 D2549020605800 D2549020606800 D2549020607400 D2549020607600 D2549020608200 D2549020608400 D2549020608600 D2549020609000 D2549020609400 D2549020609600 D2549020610400 D2549020612600 D2549020613200 D2549020613600 D2549020614000 D2549020614600 D2549020701200 D2549020704000 D2549030505800 D2549030506200 D2549030506800 D2549030507000 D2549030509000 R225401107-004 R225401134-002 R225401134-004 R225401134-006 R225401136-016 R225401172-002

75. Disassembly of the Door

A. General

A complete disassembly of the component is not necessary and not recommended.

Do not disassemble the component more than it is necessary for:

- Cleaning
- Visual Inspection
- Replacement of defective parts.

B. Job Set-up Information
(1) Consumable Materials

REFERENCE	DESIGNATION
08-007	Sealant, High Temperature
	FASTBOND 10 - Formica Bonding Rigid Vinyl

Table 3350
Consumable Materials

(2) Fixtures, Tools, Test and Support Equipment

REFERENCE	DESIGNATION
	hot air blower

Table 3351
Fixtures, Tools, Test and Support Equipment

C. Procedure

WARNING: **BE CAREFUL WHEN YOU USE SOLVENTS/CLEANING AGENTS, SEALANTS AND OTHER MATERIALS. OBEY THE MATERIAL MANUFACTURER'S INSTRUCTIONS AND THE LOCAL REGULATIONS. MAKE SURE THAT THERE IS A GOOD FLOW OF AIR THROUGH THE WORK AREA. DO NOT BREATHE THE FUMES. DO NOT SMOKE. DO NOT USE THESE MATERIALS NEAR A FLAME, SPARKS OR SOURCES OF HEAT. USE PROTECTIVE CLOTHING, GOGGLES AND GLOVES. IF YOU GET ONE OF THESE MATERIALS ON YOUR SKIN OR IN YOUR EYES, FLUSH IT AWAY WITH A FLOW OF CLEAN WATER. IF YOU GET ONE OF THESE MATERIALS IN YOUR MOUTH, GET IMMEDIATE MEDICAL AID. IN GENERAL, THESE MATERIALS ARE POISONOUS, FLAMMABLE AND SKIN IRRITANTS.**

CAUTION: **DO ALL THE WORK ON A CLEAN, SOFT SURFACE TO PREVENT DAMAGE TO THE COMPONENTS.**

SUB TASK 25-41-51-040-113-A01
D2549010510600 D2549020604400 D2549020604800 D2549020606800 D2549020607600 D2549020608600 D2549020609000 D2549020609600 D2549020613200 D2549020614600 D2549020701200 D2549030507000 R225401172-002

1. Disassembly of the Door (11C-1)

NOTE: **See TABLE 3352 for the references for the replacement procedures of permanent installed parts.**

More data for bonded parts are given in column SEE REPAIR TASK. Use the data for the selection of the related repair solution.

IPL FIG. ITEM	COMPONENT PART NAME	IPL FIG. ITEM	REPLACEMENT PART NAME	SEE REPAIR TASK
11C-001	Single Door Assembly	11C-150	Scuff Plate	Replacement of the Bonded Parts Material No. 08-553 FASTBOND 10 - Formica Bonding Rigid Vinyl

Table 3352
Reference list for the replacement of permanent installed parts

(a) Remove the screw 11C-080 and the coat hook 11C-090.

(b) Remove and disassemble the ashtray assemblies 11C-130 as follows:

1 Remove the ashtray cover 11C-133 from the ashtray case 11C-135.

2 Remove the screws 11C-050 from the ashtray case 11C-135.

(c) Remove the screws 11C-030, the washers 11C-040 and the hinge 11C-010.

(d) Disassemble the hinge 11C-010 as follows:

WARNING: **BE CAREFUL WHEN YOU USE MATERIAL NO. 08-007 SEALANT, HIGH TEMPERATURE. OBEY THE MATERIAL MANUFACTURER'S INSTRUCTIONS.**

1 Remove the setscrews 11C-020 from the hinge 11C-010.

NOTE: **If necessary use a hot air blower to heat up the Material No. 08-007 Sealant, High Temperature to remove the setscrews 11C-020.**

(e) Remove the screws 11C-050 and the sections 11C-060, 11C-070.

(f) Remove the screws 11C-030.

(g) Removal and Disassembly of the Lavatory Simple Door-Latch 11C-100

1 Remove the knob 11C-106 from the lock 11C-102 and the inside face of the folding door assy with a spanner.

2 Turn the folding door assy over, lift the flap above the lock 11C-102 and remove the screws that install the release system 11C-104.

3 Remove the slider pin from the lock 11C-102.

4 Remove the release system 11C-104 and the lock 11C-102.

(h) Remove the threaded bolt 11C-120.

(i) Remove the screws 11C-030 and the latch assembly 11C-145 from the single door assembly 11C-001.

(j) Remove the screws 11C-170 and the air outlets 11C-160.

SUB TASK 25-41-51-040-113-B01

D2549010510200 D2549010511400 D2549010511800 D2549010513000 D2549010513400 D2549010513600 D2549020506800 D2549020605000 D2549020605600 D2549020605800 D2549020607400 D2549020608200 D2549020608400 D2549020609400 D2549020610400 D2549020612600 D2549020613600 D2549020614000 D2549020704000 D2549030505800 D2549030506200 D2549030506800 D2549030509000 R225401107-004 R225401134-002 R225401134-004 R225401134-006 R225401136-016

2. Disassembly of the Door (11C-1)

NOTE: **See TABLE 3353 for the references for the replacement procedures of permanent installed parts.**

More data for bonded parts are given in column SEE REPAIR TASK. Use the data for the selection of the related repair solution.

IPL FIG. ITEM	COMPONENT PART NAME	IPL FIG. ITEM	REPLACEMENT PART NAME	SEE REPAIR TASK
11C-001	Single Door Assembly	11C-150	Scuff Plate	Replacement of the Bonded Parts Material No. 08-553 FASTBOND 10 - Formica Bonding Rigid Vinyl

Table 3353
Reference list for the replacement of permanent installed parts

(a) Remove the screw 11C-080 and the coat hook 11C-090.

(b) Remove and disassemble the ashtray assemblies 11C-130 as follows:

1 Remove the ashtray cover 11C-133 from the ashtray case 11C-135.

2 Remove the screws 11C-050 from the ashtray case 11C-135.

(c) Remove the screws 11C-030, the washers 11C-040 and the hinge 11C-010.

(d) Disassemble the hinge 11C-010 as follows:

WARNING: **BE CAREFUL WHEN YOU USE MATERIAL NO. 08-007 SEALANT, HIGH TEMPERATURE. OBEY THE MATERIAL MANUFACTURER'S INSTRUCTIONS.**

1 Remove the setscrews 11C-020 from the hinge 11C-010.

NOTE: **If necessary use a hot air blower to heat up the Material No. 08-007 Sealant, High Temperature to remove the setscrews 11C-020.**

(e) Remove the screws 11C-050 and the sections 11C-060, 11C-070.

(f) Remove the screws 11C-030.

(g) Removal and Disassembly of the Lavatory Simple Door-Latch 11C-100

1 Remove the knob 11C-106 from the lock 11C-102 and the inside face of the folding door assy with a spanner.

2 Turn the folding door assy over, lift the flap above the lock 11C-102 and remove the screws that install the release system 11C-104.

3 Remove the slider pin from the lock 11C-102.

4 Remove the release system 11C-104 and the lock 11C-102.

(h) Remove the threaded bolt 11C-120.

(i) Remove the screws 11C-030 and the latch assembly 11C-140 from the single door assembly 11C-001.

NOTE: For further instructions, see CMMV 25-41-60_80477 (latch assembly).

(j) Remove the screws 11C-170 and the air outlets 11C-160.

TASK 25-41-51-000-808-E01

D2549010401400 D2549010514000 D2549010514400 D2549010602600 D2549010605200 D2549010607600 D2549010611200 D2549020512400 D2549020604600 D2549020605400 D2549020609800 D2549020610000 D2549020610200 D2549020610800 D2549020611600 D2549020613000 D2549020807400 D2549020809400 D2549030402200 D2549030404800 D2549030405400 D2549030407200 D2549030412400 D2549030507200 D2549030507400 D2549030508600 D2549030510200 D2549030600800 D2549030601600 D2549030603600 D2549030607800 D2549030612600 R225401168-000 R225401168-002 R225401168-004 R225401168-006 R225401168-008 R225401168-010 R225401168-012 R225401168-014 R225401168-016 R225401168-018 R225401168-020 R225401168-022 R225401168-024 R225401168-026 R225401168-028 R225401648-000 R225401648-006

76. Disassembly of the Door

A. General

A complete disassembly of the component is not necessary and not recommended.

Do not disassemble the component more than it is necessary for:

- Cleaning
- Visual Inspection
- Replacement of defective parts.

B. Job Set-up Information

(1) Consumable Materials

REFERENCE	DESIGNATION
08-007	Sealant, High Temperature
	FASTBOND 10 - Formica Bonding Rigid Vinyl

Table 3354
Consumable Materials

(2) Fixtures, Tools, Test and Support Equipment

REFERENCE	DESIGNATION
	hot air blower

Table 3355
Fixtures, Tools, Test and Support Equipment

C. Procedure

WARNING: **BE CAREFUL WHEN YOU USE SOLVENTS/CLEANING AGENTS, SEALANTS AND OTHER MATERIALS. OBEY THE MATERIAL MANUFACTURER'S INSTRUCTIONS AND THE LOCAL REGULATIONS. MAKE SURE THAT THERE IS A GOOD FLOW OF AIR THROUGH THE WORK AREA. DO NOT BREATHE THE FUMES. DO NOT SMOKE. DO NOT USE THESE MATERIALS NEAR A FLAME, SPARKS OR SOURCES OF HEAT. USE PROTECTIVE CLOTHING, GOGGLES AND GLOVES. IF YOU GET ONE OF THESE MATERIALS ON YOUR SKIN OR IN YOUR EYES, FLUSH IT AWAY WITH A FLOW OF CLEAN WATER. IF YOU GET ONE OF THESE MATERIALS IN YOUR MOUTH, GET IMMEDIATE MEDICAL AID. IN GENERAL, THESE MATERIALS ARE POISONOUS, FLAMMABLE AND SKIN IRRITANTS.**

CAUTION: **DO ALL THE WORK ON A CLEAN, SOFT SURFACE TO PREVENT DAMAGE TO THE COMPONENTS.**

SUB TASK 25-41-51-040-116-A01
D2549010401400 D2549010514000 D2549010514400 D2549010602600 D2549010605200 D2549010607600 D2549010611200 D2549020604600 D2549020605400 D2549020609800 D2549020610000 D2549020611600 D2549020613000 D2549030404800 D2549030412400 R225401648-000 R225401648-006

1. Disassembly of the Door (11D-1)

NOTE: **See TABLE 3356 for the references for the replacement procedures of permanent installed parts.**

More data for bonded parts are given in column SEE REPAIR TASK. Use the data for the selection of the related repair solution.

IPL FIG. ITEM	COMPONENT PART NAME	IPL FIG. ITEM	REPLACEMENT PART NAME	SEE REPAIR TASK
11D-001	Single Door Assembly	11D-140	Scuff Plate	Replacement of the Bonded Parts Material No. 08-553 FASTBOND 10 - Formica Bonding Rigid Vinyl

Table 3356
Reference list for the replacement of permanent installed parts

(a) Remove the screw 11D-080 and the coat hook 11D-090.

(b) Remove and disassemble the ashtray assemblies 11D-120 as follows:

1 Remove the ashtray cover 11D-123 from the ashtray case 11D-125.

2 Remove the screws 11D-050 from the ashtray case 11D-125.

(c) Remove the screws 11D-030, the washers 11D-040 and the hinge 11D-010.

(d) Disassemble the hinge 11D-010 as follows:

WARNING: **BE CAREFUL WHEN YOU USE MATERIAL NO. 08-007 SEALANT, HIGH TEMPERATURE. OBEY THE MATERIAL MANUFACTURER'S INSTRUCTIONS.**

1 Remove the setscrews 11D-020 from the hinge 11D-010.

NOTE: **If necessary use a hot air blower to heat up the Material No. 08-007 Sealant, High Temperature to remove the setscrews 11D-020.**

(e) Remove the screws 11D-050 and the sections 11D-060, 11D-070.

(f) Remove the screws 11D-030.

(g) Removal and Disassembly of the Lavatory Simple Door-Latch 11D-100

1 Remove the knob 11D-106 from the lock 11D-102 and the inside face of the folding door assy with a spanner.

2 Turn the folding door assy over, lift the flap above the lock 11D-102 and remove the screws that install the release system 11D-104.

3 Remove the slider pin from the lock 11D-102.

4 Remove the release system 11D-104 and the lock 11D-102.

(h) Remove the threaded bolt 11D-110.

(i) Remove the screws 11D-030 and the latch assembly 11D-130 from the single door assembly 11D-001.

NOTE: For further instructions, see CMMV 25-41-60_80477 (latch assembly).

(j) Remove the screws 11D-160 and the air outlets 11D-150.

SUB TASK 25-41-51-040-116-B01
D2549020512400 D2549020610200 D2549020610800 D2549020807400 D2549020809400 D2549030402200 D2549030405400 D2549030407200 D2549030507200 D2549030507400 D2549030508600 D2549030510200 D2549030600800 D2549030601600 D2549030603600 D2549030607800 D2549030612600 R225401168-000 R225401168-002 R225401168-004 R225401168-006 R225401168-008 R225401168-010 R225401168-012 R225401168-014 R225401168-016 R225401168-018 R225401168-020 R225401168-022 R225401168-024 R225401168-026 R225401168-028

2. Disassembly of the Door (11D-1)

NOTE: **See TABLE 3357 for the references for the replacement procedures of permanent installed parts.**

More data for bonded parts are given in column SEE REPAIR TASK. Use the data for the selection of the related repair solution.

IPL FIG. ITEM	COMPONENT PART NAME	IPL FIG. ITEM	REPLACEMENT PART NAME	SEE REPAIR TASK
11D-001	Single Door Assembly	11D-140	Scuff Plate	Replacement of the Bonded Parts Material No. 08-553 FASTBOND 10 - Formica Bonding Rigid Vinyl

Table 3357
Reference list for the replacement of permanent installed parts

(a) Remove the screw 11D-080 and the coat hook 11D-090.

(b) Remove and disassemble the ashtray assemblies 11D-120 as follows:

1 Remove the ashtray cover 11D-123 from the ashtray case 11D-125.

2 Remove the screws 11D-050 from the ashtray case 11D-125.

(c) Remove the screws 11D-030, the washers 11D-040 and the hinge 11D-010.

(d) Disassemble the hinge 11D-010 as follows:

WARNING: **BE CAREFUL WHEN YOU USE MATERIAL NO. 08-007 SEALANT, HIGH TEMPERATURE. OBEY THE MATERIAL MANUFACTURER'S INSTRUCTIONS.**

1 Remove the setscrews 11D-020 from the hinge 11D-010.

NOTE: **If necessary use a hot air blower to heat up the Material No. 08-007 Sealant, High Temperature to remove the setscrews 11D-020.**

(e) Remove the screws 11D-050 and the sections 11D-060, 11D-070.

(f) Remove the screws 11D-030.

(g) Removal and Disassembly of the Lavatory Simple Door-Latch 11D-100

1 Remove the knob 11D-106 from the lock 11D-102 and the inside face of the folding door assy with a spanner.

2 Turn the folding door assy over, lift the flap above the lock 11D-102 and remove the screws that install the release system 11D-104.

3 Remove the slider pin from the lock 11D-102.

4 Remove the release system 11D-104 and the lock 11D-102.

(h) Remove the threaded bolt 11D-110.

(i) Remove the screws 11D-030 and the latch assembly 11D-135 from the single door assembly 11D-001.

(j) Remove the screws 11D-160 and the air outlets 11D-150.

TASK 25-41-51-000-808-F01

D2549010403200 D2549010404600 D2549010404800 D2549010512600 D2549010513800
D2549010514600 D2549010600200 D2549010601200 D2549010601800 D2549010603200
D2549010603800 D2549010604200 D2549010604400 D2549010604800 D2549010605000
D2549010606400 D2549010607200 D2549010607800 D2549010608800 D2549010609400
D2549010609600 D2549010610600 D2549010610800 D2549020403000 D2549020403400
D2549020412800 D2549020413600 D2549020507000 D2549020507200 D2549020508000
D2549020508200 D2549020508400 D2549020508600 D2549020512600 D2549020512800
D2549020513200 D2549020513400 D2549020613800 D2549020614800 D2549020701000
D2549020701400 D2549020702000 D2549020702400 D2549020703600 D2549020703800
D2549020705600 D2549020706600 D2549020706800 D2549020709000 D2549020709200
D2549020709400 D2549020710200 D2549020710400 D2549020710600 D2549020711200
D2549020712200 D2549020801000 D2549020807200 D2549030401200 D2549030402000
D2549030402400 D2549030402800 D2549030403400 D2549030403600 D2549030404400
D2549030404600 D2549030405200 D2549030406600 D2549030407800 D2549030409000
D2549030409200 D2549030409800 D2549030411600 D2549030414800 D2549030504200
D2549030507800 D2549030508000 D2549030509200 D2549030509400 D2549030510600
D2549030510800 D2549030511400 D2549030511800 D2549030512400 D2549030513000
D2549030513200 D2549030513400 D2549030513600 D2549030513800 D2549030514600
D2549030600400 D2549030601800 D2549030602800 D2549030603000 D2549030603800
D2549030604800 D2549030605600 D2549030607000 D2549030607200 D2549030607400
D2549030608600 D2549030608800 D2549030610600 D2549030611000 D2549030611200
D2549030612400 D2549030612800 D2549030613200 D2549030702200 D2549030702800
R225401134-008 R225401134-010 R225401134-012 R225401134-014 R225401134-016
R225401134-018 R225401134-020 R225401134-022 R225401134-024 R225401134-026
R225401134-028 R225401134-030 R225401134-032 R225401134-034 R225401134-036
R225401134-038 R225401136-000 R225401136-004 R225401136-006 R225401136-008
R225401136-010 R225401136-012 R225401136-014 R225401136-018 R225401136-020
R225401136-022 R225401136-024 R225401137-004 R225401137-006 R225401137-008
R225401137-014 R225401137-016 R225401145-002 R225401145-004 R225401145-006
R225401145-008 R225401145-010 R225401145-012 R225401145-014 R225401175-000
R225401175-002 R225401183-000 R225401183-002 R225401183-004 R225401183-006
R225401183-008 R225401600-000 R225401600-002 R225401600-004 R225401603-000
R225401685-000 R225401685-002 R225401811-000

77. Disassembly of the Door

A. General

A complete disassembly of the component is not necessary and not recommended.

Do not disassemble the component more than it is necessary for:

- Cleaning
- Visual Inspection
- Replacement of defective parts.

B. Job Set-up Information

(1) Consumable Materials

REFERENCE	DESIGNATION
08-007	Sealant, High Temperature
	FASTBOND 10 - Formica Bonding Rigid Vinyl

Table 3358
Consumable Materials

(2) Fixtures, Tools, Test and Support Equipment

REFERENCE	DESIGNATION
	hot air blower

Table 3359
Fixtures, Tools, Test and Support Equipment

C. Procedure

WARNING: **BE CAREFUL WHEN YOU USE SOLVENTS/CLEANING AGENTS, SEALANTS AND OTHER MATERIALS. OBEY THE MATERIAL MANUFACTURER'S INSTRUCTIONS AND THE LOCAL REGULATIONS. MAKE SURE THAT THERE IS A GOOD FLOW OF AIR THROUGH THE WORK AREA. DO NOT BREATHE THE FUMES. DO NOT SMOKE. DO NOT USE THESE MATERIALS NEAR A FLAME, SPARKS OR SOURCES OF HEAT. USE PROTECTIVE CLOTHING, GOGGLES AND GLOVES. IF YOU GET ONE OF THESE MATERIALS ON YOUR SKIN OR IN YOUR EYES, FLUSH IT AWAY WITH A FLOW OF CLEAN WATER. IF YOU GET ONE OF THESE MATERIALS IN YOUR MOUTH, GET IMMEDIATE MEDICAL AID. IN GENERAL, THESE MATERIALS ARE POISONOUS, FLAMMABLE AND SKIN IRRITANTS.**

CAUTION: **DO ALL THE WORK ON A CLEAN, SOFT SURFACE TO PREVENT DAMAGE TO THE COMPONENTS.**

SUB TASK 25-41-51-040-117-A01

D2549010512600 D2549010513800 D2549010514600 D2549010600200
D2549010601800 D2549010603800 D2549010604200 D2549010604400
D2549010605000 D2549010607200 D2549010608800 D2549010609600
D2549010610800 D2549020403000 D2549020403400 D2549020413600
D2549020507000 D2549020507200 D2549020508200 D2549020508400
D2549020508600 D2549020512800 D2549020513200 D2549020513400
D2549020613800 D2549020614800 D2549020701000 D2549020702000
D2549020702400 D2549020703600 D2549020703800 D2549020705600
D2549020706800 D2549020709200 D2549020709400 D2549020710200
D2549020710400 D2549020710600 D2549020711200 D2549020712200
D2549020801000 D2549020807200 D2549030401200 D2549030402000
D2549030402400 D2549030402800 D2549030403400 D2549030403600
D2549030404400 D2549030404600 D2549030405200 D2549030406600
D2549030407800 D2549030409000 D2549030409200 D2549030409800
D2549030411600 D2549030414800 D2549030504200 D2549030507800
D2549030508000 D2549030509200 D2549030509400 D2549030510600
D2549030510800 D2549030511400 D2549030511800 D2549030512400
D2549030513000 D2549030513200 D2549030513400 D2549030513600
D2549030513800 D2549030514600 D2549030600400 D2549030601800
D2549030602800 D2549030603000 D2549030603800 D2549030604800
D2549030605600 D2549030607000 D2549030607200 D2549030607400
D2549030608600 D2549030608800 D2549030610600 D2549030611000
D2549030611200 D2549030612400 D2549030612800 D2549030613200
D2549030702200 D2549030702800 R225401134-008 R225401134-010 R225401134-
012 R225401134-014 R225401134-016 R225401134-018 R225401134-020 R225401134-
022 R225401134-024 R225401134-026 R225401134-028 R225401134-030 R225401134-
032 R225401134-034 R225401134-036 R225401134-038 R225401136-000 R225401136-
004 R225401136-006 R225401136-008 R225401136-010 R225401136-012 R225401136-
014 R225401136-018 R225401136-020 R225401136-022 R225401136-024 R225401137-
004 R225401137-006 R225401137-008 R225401137-014 R225401137-016 R225401145-
002 R225401145-004 R225401145-006 R225401145-008 R225401145-010 R225401145-
012 R225401145-014 R225401175-000 R225401175-002 R225401600-000
R225401600-002 R225401600-004

1. Disassembly of the Door (11E-1)

NOTE: **See TABLE 3360 for the references for the replacement procedures of permanent installed parts.**

More data for bonded parts are given in column SEE REPAIR TASK. Use the data for the selection of the related repair solution.

IPL FIG. ITEM	COMPONENT PART NAME	IPL FIG. ITEM	REPLACEMENT PART NAME	SEE REPAIR TASK
11E-001	Single Door Assembly	11E-140	Scuff Plate	Replacement of the Bonded Parts Material No. 08-553 FASTBOND 10 - Formica Bonding Rigid Vinyl

Table 3360
Reference list for the replacement of permanent installed parts

(a) Remove the screw 11E-080 and the coat hook 11E-090.

(b) Remove and disassemble the ashtray assemblies 11E-120 as follows:

1 Remove the ashtray cover 11E-123 from the ashtray case 11E-125.

2 Remove the screws 11E-050 from the ashtray case 11E-125.

(c) Remove the screws 11E-030, the washers 11E-040 and the hinge 11E-010.

(d) Disassemble the hinge 11E-010 as follows:

WARNING: **BE CAREFUL WHEN YOU USE MATERIAL NO. 08-007 SEALANT, HIGH TEMPERATURE. OBEY THE MATERIAL MANUFACTURER'S INSTRUCTIONS.**

1 Remove the setscrews 11E-020 from the hinge 11E-010.

NOTE: **If necessary use a hot air blower to heat up the Material No. 08-007 Sealant, High Temperature to remove the setscrews 11E-020.**

(e) Remove the screws 11E-050 and the sections 11E-060, 11E-070.

(f) Remove the screws 11E-030.

(g) Removal and Disassembly of the Lavatory Simple Door-Latch 11E-100

1 Remove the knob 11E-106 from the lock 11E-102 and the inside face of the folding door assy with a spanner.

2 Turn the folding door assy over, lift the flap above the lock 11E-102 and remove the screws that install the release system 11E-104.

3 Remove the slider pin from the lock 11E-102.

4 Remove the release system 11E-104 and the lock 11E-102.

(h) Remove the threaded bolt 11E-110.

(i) Remove the screws 11E-030 and the latch assembly 11E-130 from the single door assembly 11E-001.

NOTE: For further instructions, see CMMV 25-41-60_80477 (latch assembly).

(j) Remove the screws 11E-160 and the air outlets 11E-150.

SUB TASK 25-41-51-040-117-B01
D2549010403200 D2549010404600 D2549010404800 D2549010601200 D2549010603200 D2549010604800 D2549010606400 D2549010607800 D2549010609400 D2549010610600 D2549020412800 D2549020508000 D2549020512600 D2549020701400 D2549020706600 D2549020709000 R225401183-000 R225401183-002 R225401183-004 R225401183-006 R225401183-008 R225401603-000 R225401685-000 R225401685-002 R225401811-000

2. Disassembly of the Door (11E-1)

NOTE: **See TABLE 3361 for the references for the replacement procedures of permanent installed parts.**

More data for bonded parts are given in column SEE REPAIR TASK. Use the data for the selection of the related repair solution.

IPL FIG. ITEM	COMPONENT PART NAME	IPL FIG. ITEM	REPLACEMENT PART NAME	SEE REPAIR TASK
11E-001	Single Door Assembly	11E-140	Scuff Plate	Replacement of the Bonded Parts Material No. 08-553 FASTBOND 10 - Formica Bonding Rigid Vinyl

Table 3361
Reference list for the replacement of permanent installed parts

(a) Remove the screw 11E-080 and the coat hook 11E-090.

(b) Remove and disassemble the ashtray assemblies 11E-120 as follows:

1 Remove the ashtray cover 11E-123 from the ashtray case 11E-125.

2 Remove the screws 11E-050 from the ashtray case 11E-125.

(c) Remove the screws 11E-030, the washers 11E-040 and the hinge 11E-010.

(d) Disassemble the hinge 11E-010 as follows:

WARNING: **BE CAREFUL WHEN YOU USE MATERIAL NO. 08-007 SEALANT, HIGH TEMPERATURE. OBEY THE MATERIAL MANUFACTURER'S INSTRUCTIONS.**

1 Remove the setscrews 11E-020 from the hinge 11E-010.

NOTE: **If necessary use a hot air blower to heat up the Material No. 08-007 Sealant, High Temperature to remove the setscrews 11E-020.**

(e) Remove the screws 11E-050 and the sections 11E-060, 11E-070.

(f) Remove the screws 11E-030.

(g) Removal and Disassembly of the Lavatory Simple Door-Latch 11E-100

1 Remove the knob 11E-106 from the lock 11E-102 and the inside face of the folding door assy with a spanner.

2 Turn the folding door assy over, lift the flap above the lock 11E-102 and remove the screws that install the release system 11E-104.

3 Remove the slider pin from the lock 11E-102.

4 Remove the release system 11E-104 and the lock 11E-102.

(h) Remove the threaded bolt 11E-110.

(i) Remove the screws 11E-030 and the latch assembly 11E-135 from the single door assembly 11E-001.

(j) Remove the screws 11E-160 and the air outlets 11E-150.

TASK 25-41-51-000-808-G01

D2549010403800 D2549010405000 D2549010405800 D2549010407000 D2549010514800
D2549010600400 D2549010600600 D2549010601400 D2549010602000 D2549010602200
D2549010602400 D2549010602800 D2549010604600 D2549010605600 D2549010611800
D2549020301000 D2549020400400 D2549020401200 D2549020402000 D2549020403600
D2549020404600 D2549020406800 D2549020410200 D2549020411400 D2549020413000
D2549020413400 D2549020414000 D2549020414200 D2549020507600 D2549020509000
D2549020509200 D2549020509600 D2549020510800 D2549020511200 D2549020514000
D2549020602200 D2549020612200 D2549020612400 D2549020614400 D2549020700000
D2549020700200 D2549020700400 D2549020700600 D2549020700800 D2549020704200
D2549020704400 D2549020705000 D2549020705400 D2549020706200 D2549020707000
D2549020707200 D2549020707400 D2549020708000 D2549020708200 D2549020708600
D2549020709600 D2549020711000 D2549020711600 D2549020713800 D2549020714400
D2549020800400 D2549020801600 D2549020807600 D2549020809600 D2549020810000
D2549020810400 D2549020810600 D2549020811200 D2549020811400 D2549020812200
D2549020813600 D2549030401000 D2549030403800 D2549030405800 D2549030406000
D2549030408600 D2549030409400 D2549030413000 D2549030508200 D2549030509600
D2549030509800 D2549030511000 D2549030511200 D2549030511600 D2549030512000
D2549030512200 D2549030512800 D2549030514000 D2549030514400 D2549030514800
D2549030600000 D2549030601200 D2549030602000 D2549030602400 D2549030602600
D2549030603400 D2549030604600 D2549030605000 D2549030605200 D2549030605400
D2549030606200 D2549030606400 D2549030607600 D2549030609200 D2549030610400
D2549030611400 D2549030611600 D2549030612200 D2549030613800 D2549030614600
D2549030700200 D2549030702400 D2549030702600 D2549040500600 D2549040500800
D2549040501000 D2549040501400 R225401142-000 R225401142-002 R225401153-000
R225401172-000 R225401172-004 R225401172-006 R225401172-008 R225401172-010
R225401172-012 R225401172-014 R225401172-016 R225401172-018 R225401195-000
R225401199-006 R225401613-000 R225401643-002 R225401643-004 R225401643-006
R225401643-008 R225401646-000 R225401646-002 R225401647-000 R225401656-000
R225401656-002 R225401673-000 R225401673-002 R225401673-004 R225401673-006
R225401691-000 R225401691-002

78. Disassembly of the Door

A. General

A complete disassembly of the component is not necessary and not recommended.

Do not disassemble the component more than it is necessary for:

- Cleaning
- Visual Inspection
- Replacement of defective parts.

B. Job Set-up Information

(1) Consumable Materials

REFERENCE	DESIGNATION
08-007	Sealant, High Temperature
	FASTBOND 10 - Formica Bonding Rigid Vinyl

Table 3362
Consumable Materials

(2) Fixtures, Tools, Test and Support Equipment

REFERENCE	DESIGNATION
	hot air blower

Table 3363
Fixtures, Tools, Test and Support Equipment

C. Procedure

WARNING: **BE CAREFUL WHEN YOU USE SOLVENTS/CLEANING AGENTS, SEALANTS AND OTHER MATERIALS. OBEY THE MATERIAL MANUFACTURER'S INSTRUCTIONS AND THE LOCAL REGULATIONS. MAKE SURE THAT THERE IS A GOOD FLOW OF AIR THROUGH THE WORK AREA. DO NOT BREATHE THE FUMES. DO NOT SMOKE. DO NOT USE THESE MATERIALS NEAR A FLAME, SPARKS OR SOURCES OF HEAT. USE PROTECTIVE CLOTHING, GOGGLES AND GLOVES. IF YOU GET ONE OF THESE MATERIALS ON YOUR SKIN OR IN YOUR EYES, FLUSH IT AWAY WITH A FLOW OF CLEAN WATER. IF YOU GET ONE OF THESE MATERIALS IN YOUR MOUTH, GET IMMEDIATE MEDICAL AID. IN GENERAL, THESE MATERIALS ARE POISONOUS, FLAMMABLE AND SKIN IRRITANTS.**

CAUTION: **DO ALL THE WORK ON A CLEAN, SOFT SURFACE TO PREVENT DAMAGE TO THE COMPONENTS.**

SUB TASK 25-41-51-040-118-A01

D2549010514800 D2549010600400 D2549010600600 D2549010601400
D2549010602000 D2549010602200 D2549010602400 D2549010602800
D2549010604600 D2549020401200 D2549020410200 D2549020413400
D2549020414000 D2549020507600 D2549020509000 D2549020509200
D2549020511200 D2549020514000 D2549020612400 D2549020614400
D2549020700200 D2549020700800 D2549020707200 D2549020708200
D2549020708600 D2549020709600 D2549020711000 D2549020713800
D2549020714400 D2549020801600 D2549020809600 D2549020811200
D2549030401000 D2549030406000 D2549030509600 D2549030511000
D2549030511200 D2549030512000 D2549030512800 D2549030514000
D2549030514400 D2549030514800 D2549030601200 D2549030603400
D2549030605200 D2549030605400 D2549030607600 D2549030610400
D2549030611400 D2549030700200 D2549030702600 R225401153-000

1. Disassembly of the Door (11F-1)

NOTE: **See TABLE 3364 for the references for the replacement procedures of permanent installed parts.**

More data for bonded parts are given in column SEE REPAIR TASK. Use the data for the selection of the related repair solution.

IPL FIG. ITEM	COMPONENT PART NAME	IPL FIG. ITEM	REPLACEMENT PART NAME	SEE REPAIR TASK
11F-001	Single Door Assembly	11F-140	Scuff Plate	Replacement of the Bonded Parts Material No. 08-553 FASTBOND 10 - Formica Bonding Rigid Vinyl

Table 3364
Reference list for the replacement of permanent installed parts

(a) Remove the screw 11F-080 and the coat hook 11F-090.

(b) Remove and disassemble the ashtray assemblies 11F-120 as follows:

1 Remove the ashtray cover 11F-123 from the ashtray case 11F-125.

2 Remove the screws 11F-050 from the ashtray case 11F-125.

(c) Remove the screws 11F-030, the washers 11F-040 and the hinge 11F-010.

(d) Disassemble the hinge 11F-010 as follows:

WARNING: BE CAREFUL WHEN YOU USE MATERIAL NO. 08-007 SEALANT, HIGH TEMPERATURE. OBEY THE MATERIAL MANUFACTURER'S INSTRUCTIONS.

1 Remove the setscrews 11F-020 from the hinge 11F-010.

NOTE: If necessary use a hot air blower to heat up the Material No. 08-007 Sealant, High Temperature to remove the setscrews 11F-020.

(e) Remove the screws 11F-050 and the sections 11F-060, 11F-070.

(f) Remove the screws 11F-030.

(g) Removal and Disassembly of the Lavatory Simple Door-Latch 11F-100

1 Remove the knob 11F-106 from the lock 11F-102 and the inside face of the folding door assy with a spanner.

2 Turn the folding door assy over, lift the flap above the lock 11F-102 and remove the screws that install the release system 11F-104.

3 Remove the slider pin from the lock 11F-102.

4 Remove the release system 11F-104 and the lock 11F-102.

(h) Remove the threaded bolt 11F-110.

(i) Remove the screws 11F-030 and the latch assembly 11F-130 from the single door assembly 11F-001.

NOTE: For further instructions, see CMMV 25-41-60_80477 (latch assembly).

(j) Remove the screws 11F-160 and the air outlets 11F-150.

SUB TASK 25-41-51-040-118-B01

D2549010403800 D2549010405000 D2549010405800 D2549010407000
D2549010605600 D2549010611800 D2549020301000 D2549020400400
D2549020402000 D2549020403600 D2549020404600 D2549020406800
D2549020411400 D2549020413000 D2549020414200 D2549020509600
D2549020510800 D2549020602200 D2549020612200 D2549020700000
D2549020700400 D2549020700600 D2549020704200 D2549020704400
D2549020705000 D2549020705400 D2549020706200 D2549020707000
D2549020707400 D2549020708000 D2549020711600 D2549020800400

D2549020807600 D2549020810000 D2549020810400 D2549020810600 D2549020811400 D2549020812200 D2549020813600 D2549030403800 D2549030405800 D2549030408600 D2549030409400 D2549030413000 D2549030508200 D2549030509800 D2549030511600 D2549030512200 D2549030600000 D2549030602000 D2549030602400 D2549030602600 D2549030604600 D2549030605000 D2549030606200 D2549030606400 D2549030609200 D2549030611600 D2549030612200 D2549030613800 D2549030614600 D2549030702400 D2549040500600 D2549040500800 D2549040501000 D2549040501400 R225401142-000 R225401142-002 R225401172-000 R225401172-004 R225401172-006 R225401172-008 R225401172-010 R225401172-012 R225401172-014 R225401172-016 R225401172-018 R225401195-000 R225401199-006 R225401613-000 R225401643-002 R225401643-004 R225401643-006 R225401643-008 R225401646-000 R225401646-002 R225401647-000 R225401656-000 R225401656-002 R225401673-000 R225401673-002 R225401673-004 R225401673-006 R225401691-000 R225401691-002

2. Disassembly of the Door (11F-1)

NOTE: **See TABLE 3365 for the references for the replacement procedures of permanent installed parts.**

More data for bonded parts are given in column SEE REPAIR TASK. Use the data for the selection of the related repair solution.

IPL FIG. ITEM	COMPONENT PART NAME	IPL FIG. ITEM	REPLACEMENT PART NAME	SEE REPAIR TASK
11F-001	Single Door Assembly	11F-140	Scuff Plate	Replacement of the Bonded Parts Material No. 08-553 FASTBOND 10 - Formica Bonding Rigid Vinyl

Table 3365
Reference list for the replacement of permanent installed parts

(a) Remove the screw 11F-080 and the coat hook 11F-090.

(b) Remove and disassemble the ashtray assemblies 11F-120 as follows:

1 Remove the ashtray cover 11F-123 from the ashtray case 11F-125.

2 Remove the screws 11F-050 from the ashtray case 11F-125.

(c) Remove the screws 11F-030, the washers 11F-040 and the hinge 11F-010.

(d) Disassemble the hinge 11F-010 as follows:

WARNING: BE CAREFUL WHEN YOU USE MATERIAL NO. 08-007 SEALANT, HIGH TEMPERATURE. OBEY THE MATERIAL MANUFACTURER'S INSTRUCTIONS.

1 Remove the setscrews 11F-020 from the hinge 11F-010.

NOTE: If necessary use a hot air blower to heat up the Material No. 08-007 Sealant, High Temperature to remove the setscrews 11F-020.

(e) Remove the screws 11F-050 and the sections 11F-060, 11F-070.

(f) Remove the screws 11F-030.

(g) Removal and Disassembly of the Lavatory Simple Door-Latch 11F-100

1 Remove the knob 11F-106 from the lock 11F-102 and the inside face of the folding door assy with a spanner.

2 Turn the folding door assy over, lift the flap above the lock 11F-102 and remove the screws that install the release system 11F-104.

3 Remove the slider pin from the lock 11F-102.

4 Remove the release system 11F-104 and the lock 11F-102.

(h) Remove the threaded bolt 11F-110.

(i) Remove the screws 11F-030 and the latch assembly 11F-135 from the single door assembly 11F-001.

(j) Remove the screws 11F-160 and the air outlets 11F-150.

TASK 25-41-51-000-808-H01

D2549010404400 D2549010406200 D2549010600800 D2549010601600 D2549010603600
D2549010611000 D2549010614200 D2549020300400 D2549020302800 D2549020402600
D2549020405600 D2549020406200 D2549020406600 D2549020407000 D2549020407800
D2549020408000 D2549020409000 D2549020409200 D2549020409400 D2549020410400
D2549020411000 D2549020412000 D2549020412400 D2549020413200 D2549020507400
D2549020507800 D2549020508800 D2549020512000 D2549020512200 D2549020611800
D2549020701600 D2549020701800 D2549020702200 D2549020703400 D2549020704800
D2549020705200 D2549020708400 D2549020709800 D2549020710000 D2549020711400
D2549020712400 D2549020712800 D2549020713200 D2549020713400 D2549020714000
D2549020800600 D2549020800800 D2549020802800 D2549020803800 D2549020805800
D2549020806000 D2549020806200 D2549020807000 D2549020808600 D2549020808800
D2549020810200 D2549020811800 D2549020813800 D2549020814400 D2549030400200
D2549030408000 D2549030410400 D2549030411200 D2549030414400 D2549030503800
D2549030507600 D2549030508800 D2549030510400 D2549030514200 D2549030600600
D2549030605800 D2549030609800 D2549030614000 D2549030701000 D2549030703400
R225401115-000 R225401152-000 R225401152-002 R225401152-004 R225401152-006
R225401152-008 R225401152-010 R225401196-000 R225401196-002 R225401196-004
R225401196-006 R225401196-008 R225401196-010 R225401196-012 R225401196-014
R225401196-016 R225401196-018 R225401196-020 R225401196-022 R225401196-024
R225401196-034 R225401196-036 R225401196-038 R225401196-040 R225401196-042
R225401196-044 R225401196-046 R225401196-048 R225401196-050 R225401196-052
R225401196-054 R225401196-056 R225401196-058 R225401196-060 R225401196-062
R225401196-064 R225401196-066 R225401196-068 R225401196-070 R225401609-000
R225401662-000 R225401662-002

79. Disassembly of the Door

A. General

A complete disassembly of the component is not necessary and not recommended.

Do not disassemble the component more than it is necessary for:

- Cleaning
- Visual Inspection
- Replacement of defective parts.

B. Job Set-up Information
(1) Consumable Materials

REFERENCE	DESIGNATION
08-007	Sealant, High Temperature
	FASTBOND 10 - Formica Bonding Rigid Vinyl

Table 3366
Consumable Materials

(2) Fixtures, Tools, Test and Support Equipment

REFERENCE	DESIGNATION
	hot air blower

Table 3367
Fixtures, Tools, Test and Support Equipment

C. Procedure

WARNING: **BE CAREFUL WHEN YOU USE SOLVENTS/CLEANING AGENTS, SEALANTS AND OTHER MATERIALS. OBEY THE MATERIAL MANUFACTURER'S INSTRUCTIONS AND THE LOCAL REGULATIONS. MAKE SURE THAT THERE IS A GOOD FLOW OF AIR THROUGH THE WORK AREA. DO NOT BREATHE THE FUMES. DO NOT SMOKE. DO NOT USE THESE MATERIALS NEAR A FLAME, SPARKS OR SOURCES OF HEAT. USE PROTECTIVE CLOTHING, GOGGLES AND GLOVES. IF YOU GET ONE OF THESE MATERIALS ON YOUR SKIN OR IN YOUR EYES, FLUSH IT AWAY WITH A FLOW OF CLEAN WATER. IF YOU GET ONE OF THESE MATERIALS IN YOUR MOUTH, GET IMMEDIATE MEDICAL AID. IN GENERAL, THESE MATERIALS ARE POISONOUS, FLAMMABLE AND SKIN IRRITANTS.**

CAUTION: **DO ALL THE WORK ON A CLEAN, SOFT SURFACE TO PREVENT DAMAGE TO THE COMPONENTS.**

SUB TASK 25-41-51-040-119-A01

D2549010404400 D2549010406200 D2549010600800 D2549020302800
D2549020402600 D2549020406200 D2549020406600 D2549020407000
D2549020407800 D2549020408000 D2549020409000 D2549020409400
D2549020410400 D2549020411000 D2549020412000 D2549020412400
D2549020413200 D2549020508800 D2549020512000 D2549020611800
D2549020701600 D2549020702200 D2549020703400 D2549020705200
D2549020709800 D2549020710000 D2549020711400 D2549020713200
D2549020713400 D2549020714000 D2549020800600 D2549020802800
D2549020805800 D2549020806000 D2549020807000 D2549020808600
D2549020810200 D2549020811800 D2549020813800 D2549030400200

D2549030408000 D2549030410400 D2549030411200 D2549030414400 D2549030514200 D2549030600600 D2549030605800 D2549030609800 D2549030701000 D2549030703400 R225401152-000 R225401152-002 R225401152-004 R225401152-006 R225401152-008 R225401152-010 R225401196-000 R225401196-002 R225401196-004 R225401196-006 R225401196-008 R225401196-010 R225401196-012 R225401196-014 R225401196-016 R225401196-018 R225401196-020 R225401196-022 R225401196-024 R225401196-034 R225401196-036 R225401196-038 R225401196-040 R225401196-042 R225401196-044 R225401196-046 R225401196-048 R225401196-050 R225401196-052 R225401196-054 R225401196-056 R225401196-058 R225401196-060 R225401196-062 R225401196-064 R225401196-066 R225401196-068 R225401196-070 R225401609-000 R225401662-000 R225401662-002

1. Disassembly of the Door (11G-1)

NOTE: **See TABLE 3368 for the references for the replacement procedures of permanent installed parts.**

More data for bonded parts are given in column SEE REPAIR TASK. Use the data for the selection of the related repair solution.

IPL FIG. ITEM	COMPONENT PART NAME	IPL FIG. ITEM	REPLACEMENT PART NAME	SEE REPAIR TASK
11G-001	Single Door Assembly	11G-140	Scuff Plate	Replacement of the Bonded Parts Material No. 08-553 FASTBOND 10 - Formica Bonding Rigid Vinyl

Table 3368
Reference list for the replacement of permanent installed parts

(a) Remove the screw 11G-080 and the coat hook 11G-090.

(b) Remove and disassemble the ashtray assemblies 11G-120 as follows:

1 Remove the ashtray cover 11G-123 from the ashtray case 11G-125.

2 Remove the screws 11G-050 from the ashtray case 11G-125.

(c) Remove the screws 11G-030, the washers 11G-040 and the hinge 11G-010.

(d) Disassemble the hinge 11G-010 as follows:

WARNING: **BE CAREFUL WHEN YOU USE MATERIAL NO. 08-007 SEALANT, HIGH TEMPERATURE. OBEY THE MATERIAL MANUFACTURER'S INSTRUCTIONS.**

1 Remove the setscrews 11G-020 from the hinge 11G-010.

NOTE: **If necessary use a hot air blower to heat up the Material No. 08-007 Sealant, High Temperature to remove the setscrews 11G-020.**

(e) Remove the screws 11G-050 and the sections 11G-060, 11G-070.

(f) Remove the screws 11G-030.

(g) Removal and Disassembly of the Lavatory Simple Door-Latch 11G-100

1 Remove the knob 11G-106 from the lock 11G-102 and the inside face of the folding door assy with a spanner.

2 Turn the folding door assy over, lift the flap above the lock 11G-102 and remove the screws that install the release system 11G-104.

3 Remove the slider pin from the lock 11G-102.

4 Remove the release system 11G-104 and the lock 11G-102.

(h) Remove the threaded bolt 11G-110.

(i) Remove the screws 11G-030 and the latch assembly 11G-130 from the single door assembly 11G-001.

(j) Remove the screws 11G-160 and the air outlets 11G-150.

SUB TASK 25-41-51-040-119-B01
D2549010601600 D2549010603600 D2549010611000 D2549010614200
D2549020300400 D2549020405600 D2549020409200 D2549020507400
D2549020507800 D2549020512200 D2549020701800 D2549020704800
D2549020708400 D2549020712400 D2549020712800 D2549020800800
D2549020803800 D2549020806200 D2549020808800 D2549020814400
D2549030503800 D2549030507600 D2549030508800 D2549030510400
D2549030614000 R225401115-000

2. Disassembly of the Door (11G-1)

NOTE: **See TABLE 3369 for the references for the replacement procedures of permanent installed parts.**

More data for bonded parts are given in column SEE REPAIR TASK. Use the data for the selection of the related repair solution.

IPL FIG. ITEM	COMPONENT PART NAME	IPL FIG. ITEM	REPLACEMENT PART NAME	SEE REPAIR TASK
11G-001	Single Door Assembly	11G-140	Scuff Plate	Replacement of the Bonded Parts Material No. 08-553 FASTBOND 10 - Formica Bonding Rigid Vinyl

Table 3369
Reference list for the replacement of permanent installed parts

(a) Remove the screw 11G-080 and the coat hook 11G-090.

(b) Remove and disassemble the ashtray assemblies 11G-120 as follows:

1 Remove the ashtray cover 11G-123 from the ashtray case 11G-125.

2 Remove the screws 11G-050 from the ashtray case 11G-125.

(c) Remove the screws 11G-030, the washers 11G-040 and the hinge 11G-010.

(d) Disassemble the hinge 11G-010 as follows:

WARNING: **BE CAREFUL WHEN YOU USE MATERIAL NO. 08-007 SEALANT, HIGH TEMPERATURE. OBEY THE MATERIAL MANUFACTURER'S INSTRUCTIONS.**

1 Remove the setscrews 11G-020 from the hinge 11G-010.

NOTE: **If necessary use a hot air blower to heat up the Material No. 08-007 Sealant, High Temperature to remove the setscrews 11G-020.**

(e) Remove the screws 11G-050 and the sections 11G-060, 11G-070.

(f) Remove the screws 11G-030.

(g) Remove the threaded bolt 11G-110.

(h) Removal and Disassembly of the Lavatory Simple Door-Latch 11G-100

1 Remove the knob 11G-106 from the lock 11G-102 and the inside face of the folding door assy with a spanner.

2 Turn the folding door assy over, lift the flap above the lock 11G-102 and remove the screws that install the release system 11G-104.

3 Remove the slider pin from the lock 11G-102.

4 Remove the release system 11G-104 and the lock 11G-102.

(i) Remove the screws 11G-030 and the latch assembly 11G-135 from the single door assembly 11G-001.

NOTE: For further instructions, see CMMV 25-41-60_80477 (latch assembly).

(j) Remove the screws 11G-160 and the air outlets 11G-150.

TASK 25-41-51-000-808-J01

D2549010401600 D2549010403000 D2549010403600 D2549010404200 D2549010406000
D2549010406800 D2549010606000 D2549010606200 D2549010606600 D2549010606800
D2549010607000 D2549010608200 D2549010608600 D2549010609200 D2549010609800
D2549010610200 D2549010610400 D2549010611400 D2549010612200 D2549010613000
D2549010614800 D2549020300600 D2549020302000 D2549020401400 D2549020401600
D2549020404200 D2549020404800 D2549020405000 D2549020408600 D2549020408800
D2549020409800 D2549020412600 D2549020502200 D2549020505600 D2549020511000
D2549020514800 D2549020710800 D2549020712000 D2549020712600 D2549020800200
D2549020801400 D2549020801800 D2549020802200 D2549020803400 D2549020804000
D2549020804200 D2549020804400 D2549020804800 D2549020805000 D2549020808200
D2549020809800 D2549020810800 D2549020814000 D2549020814200 D2549030400400
D2549030400600 D2549030402600 D2549030406400 D2549030406800 D2549030411400
D2549030604200 D2549030608000 D2549030611800 D2549030613400 D2549030700000
D2549030703800 D2549040501800 D2549040502000 R225401602-000 R225401614-000
R225401622-000 R225401622-002 R225401624-000 R225401627-000 R225401627-002
R225401648-002 R225401648-004 R225401648-008 R225401688-000 R225401697-000
R225401697-002 R225401803-000 R225401803-002

80. Disassembly of the Door

A. General

A complete disassembly of the component is not necessary and not recommended.

Do not disassemble the component more than it is necessary for:

- Cleaning
- Visual Inspection
- Replacement of defective parts.

B. Job Set-up Information

(1) Consumable Materials

REFERENCE	DESIGNATION
08-007	Sealant, High Temperature
	FASTBOND 10 - Formica Bonding Rigid Vinyl

Table 3370
Consumable Materials

(2) Fixtures, Tools, Test and Support Equipment

REFERENCE	DESIGNATION
	hot air blower

Table 3371
Fixtures, Tools, Test and Support Equipment

C. Procedure

WARNING: **BE CAREFUL WHEN YOU USE SOLVENTS/CLEANING AGENTS, SEALANTS AND OTHER MATERIALS. OBEY THE MATERIAL MANUFACTURER'S INSTRUCTIONS AND THE LOCAL REGULATIONS. MAKE SURE THAT THERE IS A GOOD FLOW OF AIR THROUGH THE WORK AREA. DO NOT BREATHE THE FUMES. DO NOT SMOKE. DO NOT USE THESE MATERIALS NEAR A FLAME, SPARKS OR SOURCES OF HEAT. USE PROTECTIVE CLOTHING, GOGGLES AND GLOVES. IF YOU GET ONE OF THESE MATERIALS ON YOUR SKIN OR IN YOUR EYES, FLUSH IT AWAY WITH A FLOW OF CLEAN WATER. IF YOU GET ONE OF THESE MATERIALS IN YOUR MOUTH, GET IMMEDIATE MEDICAL AID. IN GENERAL, THESE MATERIALS ARE POISONOUS, FLAMMABLE AND SKIN IRRITANTS.**

CAUTION: **DO ALL THE WORK ON A CLEAN, SOFT SURFACE TO PREVENT DAMAGE TO THE COMPONENTS.**

SUB TASK 25-41-51-040-120-A01

D2549010403000 D2549010403600 D2549010404200 D2549010406000 D2549010406800 D2549010606000 D2549010606200 D2549010606600 D2549010609200 D2549010610400 D2549010613000 D2549020300600 D2549020408600 D2549020409800 D2549020412600 D2549020502200 D2549020505600 D2549020511000 D2549020710800 D2549020712000 D2549020712600 D2549020800200 D2549020801400 D2549020804400 D2549020804800 D2549020810800 D2549030406400 D2549030411400 D2549030604200 D2549030700000 D2549030703800 D2549040501800 D2549040502000 R225401602-000 R225401622-000 R225401622-002 R225401648-002 R225401648-004 R225401648-008 R225401688-000 R225401697-000 R225401697-002 R225401803-000 R225401803-002

1. Disassembly of the Door (11H-1)

NOTE: **See TABLE 3372 for the references for the replacement procedures of permanent installed parts.**

More data for bonded parts are given in column SEE REPAIR TASK. Use the data for the selection of the related repair solution.

IPL FIG. ITEM	COMPONENT PART NAME	IPL FIG. ITEM	REPLACEMENT PART NAME	SEE REPAIR TASK
11H-001	Single Door Assembly	11H-140	Scuff Plate	Replacement of the Bonded Parts Material No. 08-553 FASTBOND 10 - Formica Bonding Rigid Vinyl

Table 3372
Reference list for the replacement of permanent installed parts

(a) Remove the screw 11H-080 and the coat hook 11H-090.

(b) Remove and disassemble the ashtray assemblies 11H-120 as follows:

1 Remove the ashtray cover 11H-123 from the ashtray case 11H-125.

2 Remove the screws 11H-050 from the ashtray case 11H-125.

(c) Remove the screws 11H-030, the washers 11H-040 and the hinge 11H-010.

(d) Disassemble the hinge 11H-010 as follows:

WARNING: **BE CAREFUL WHEN YOU USE MATERIAL NO. 08-007 SEALANT, HIGH TEMPERATURE. OBEY THE MATERIAL MANUFACTURER'S INSTRUCTIONS.**

1 Remove the setscrews 11H-020 from the hinge 11H-010.

NOTE: **If necessary use a hot air blower to heat up the Material No. 08-007 Sealant, High Temperature to remove the setscrews 11H-020.**

(e) Remove the screws 11H-050 and the sections 11H-060, 11H-070.

(f) Remove the screws 11H-030.

(g) Removal and Disassembly of the Lavatory Simple Door-Latch 11H-100

1 Remove the knob 11H-106 from the lock 11H-102 and the inside face of the folding door assy with a spanner.

2 Turn the folding door assy over, lift the flap above the lock 11H-102 and remove the screws that install the release system 11H-104.

3 Remove the slider pin from the lock 11H-102.

4 Remove the release system 11H-104 and the lock 11H-102.

(h) Remove the threaded bolt 11H-110.

(i) Remove the screws 11H-030 and the latch assembly 11H-130 from the single door assembly 11H-001.

NOTE: For further instructions, see CMMV 25-41-60_80477 (latch assembly).

(j) Remove the screws 11H-160 and the air outlets 11H-150.

SUB TASK 25-41-51-040-120-B01
D2549010401600 D2549010606800 D2549010607000 D2549010608200 D2549010608600 D2549010609800 D2549010610200 D2549010611400 D2549010612200 D2549010614800 D2549020302000 D2549020401400 D2549020401600 D2549020404200 D2549020404800 D2549020405000 D2549020408800 D2549020514800 D2549020801800 D2549020802200 D2549020803400 D2549020804000 D2549020804200 D2549020805000 D2549020808200 D2549020809800 D2549020814000 D2549020814200 D2549030400400 D2549030400600 D2549030402600 D2549030406800 D2549030608000 D2549030611800 D2549030613400 R225401614-000 R225401624-000 R225401627-000 R225401627-002

2. Disassembly of the Door (11H-1)

NOTE: **See TABLE 3373 for the references for the replacement procedures of permanent installed parts.**

More data for bonded parts are given in column SEE REPAIR TASK. Use the data for the selection of the related repair solution.

IPL FIG. ITEM	COMPONENT PART NAME	IPL FIG. ITEM	REPLACEMENT PART NAME	SEE REPAIR TASK
11H-001	Single Door Assembly	11H-140	Scuff Plate	Replacement of the Bonded Parts Material No. 08-553 FASTBOND 10 - Formica Bonding Rigid Vinyl

Table 3373
Reference list for the replacement of permanent installed parts

(a) Remove the screw 11H-080 and the coat hook 11H-090.

(b) Remove and disassemble the ashtray assemblies 11H-120 as follows:

1 Remove the ashtray cover 11H-123 from the ashtray case 11H-125.

2 Remove the screws 11H-050 from the ashtray case 11H-125.

(c) Remove the screws 11H-030, the washers 11H-040 and the hinge 11H-010.

(d) Disassemble the hinge 11H-010 as follows:

WARNING: **BE CAREFUL WHEN YOU USE MATERIAL NO. 08-007 SEALANT, HIGH TEMPERATURE. OBEY THE MATERIAL MANUFACTURER'S INSTRUCTIONS.**

1 Remove the setscrews 11H-020 from the hinge 11H-010.

NOTE: **If necessary use a hot air blower to heat up the Material No. 08-007 Sealant, High Temperature to remove the setscrews 11H-020.**

(e) Remove the screws 11H-050 and the sections 11H-060, 11H-070.

(f) Remove the screws 11H-030.

(g) Removal and Disassembly of the Lavatory Simple Door-Latch 11H-100

1 Remove the knob 11H-106 from the lock 11H-102 and the inside face of the folding door assy with a spanner.

2 Turn the folding door assy over, lift the flap above the lock 11H-102 and remove the screws that install the release system 11H-104.

3 Remove the slider pin from the lock 11H-102.

4 Remove the release system 11H-104 and the lock 11H-102.

(h) Remove the threaded bolt 11H-110.

(i) Remove the screws 11H-030 and the latch assembly 11H-135 from the single door assembly 11H-001.

(j) Remove the screws 11H-160 and the air outlets 11H-150.

TASK 25-41-51-000-808-K01

D2549010403400 D2549020403200 D2549020407400 D2549020509800 D2549020511800 D2549020513000 D2549020514200 D2549020514400 D2549020514600 D2549020705800 D2549020713000 D2549020713600 D2549020714600 D2549020801200 D2549020802400 D2549020803000 D2549020806400 D2549020806800 D2549020814800 D2549030401400 D2549030401600 D2549030403000 D2549030405000 D2549030405600 D2549030407000 D2549030407400 D2549030407600 D2549030412600 D2549030413200 D2549030413600 D2549030600200 D2549030606000 D2549030606800 D2549030608400 D2549030609000 D2549030610000 D2549030612000 D2549030614200 D2549030614400 D2549030700400 D2549030701400 D2549040500200 D2549040500400 D2549040501200 D2549040501600 R225401199-000 R225401199-002 R225401199-004 R225401199-008 R225401199-010 R225401199-012 R225401605-000 R225401605-002 R225401611-000 R225401611-006 R225401611-008 R225401611-010 R225401611-012 R225401611-014 R225401611-016 R225401611-018 R225401611-020 R225401618-000 R225401618-002 R225401619-000 R225401619-002 R225401625-000

81. Disassembly of the Door

A. General

A complete disassembly of the component is not necessary and not recommended.

Do not disassemble the component more than it is necessary for:

- Cleaning
- Visual Inspection
- Replacement of defective parts.

B. Job Set-up Information

(1) Consumable Materials

REFERENCE	DESIGNATION
08-007	Sealant, High Temperature
	FASTBOND 10 - Formica Bonding Rigid Vinyl

Table 3374
Consumable Materials

(2) Fixtures, Tools, Test and Support Equipment

REFERENCE	DESIGNATION
	hot air blower

Table 3375
Fixtures, Tools, Test and Support Equipment

C. Procedure

WARNING: **BE CAREFUL WHEN YOU USE SOLVENTS/CLEANING AGENTS, SEALANTS AND OTHER MATERIALS. OBEY THE MATERIAL MANUFACTURER'S INSTRUCTIONS AND THE LOCAL REGULATIONS. MAKE SURE THAT THERE IS A GOOD FLOW OF AIR THROUGH THE WORK AREA. DO NOT BREATHE THE FUMES. DO NOT SMOKE. DO NOT USE THESE MATERIALS NEAR A FLAME, SPARKS OR SOURCES OF HEAT. USE PROTECTIVE CLOTHING, GOGGLES AND GLOVES. IF YOU GET ONE OF THESE MATERIALS ON YOUR SKIN OR IN YOUR EYES, FLUSH IT AWAY WITH A FLOW OF CLEAN WATER. IF YOU GET ONE OF THESE MATERIALS IN YOUR MOUTH, GET IMMEDIATE MEDICAL AID. IN GENERAL, THESE MATERIALS ARE POISONOUS, FLAMMABLE AND SKIN IRRITANTS.**

CAUTION: **DO ALL THE WORK ON A CLEAN, SOFT SURFACE TO PREVENT DAMAGE TO THE COMPONENTS.**

SUB TASK 25-41-51-040-121-A01

D2549010403400 D2549020403200 D2549020407400 D2549020509800 D2549020511800 D2549020513000 D2549020514200 D2549020514400 D2549020514600 D2549020705800 D2549020713000 D2549020713600 D2549020714600 D2549020801200 D2549020802400 D2549020803000 D2549020806400 D2549020806800 D2549020814800 D2549030401400 D2549030401600 D2549030403000 D2549030405000 D2549030405600 D2549030407000 D2549030407400 D2549030407600 D2549030412600 D2549030413200 D2549030413600 D2549030600200 D2549030606000 D2549030606800 D2549030608400 D2549030609000 D2549030610000 D2549030612000 D2549030700400 D2549030701400 D2549040500200 D2549040500400 D2549040501200 D2549040501600 R225401199-000 R225401199-002 R225401199-004 R225401199-008 R225401199-010 R225401199-012 R225401605-000 R225401605-002 R225401611-000 R225401611-006 R225401611-008 R225401611-010 R225401611-012 R225401611-014 R225401611-016 R225401611-018 R225401611-020 R225401618-000 R225401618-002 R225401619-000 R225401619-002

1. Disassembly of the Door (11J-1)

NOTE: **See TABLE 3376 for the references for the replacement procedures of permanent installed parts.**

More data for bonded parts are given in column SEE REPAIR TASK. Use the data for the selection of the related repair solution.

IPL FIG. ITEM	COMPONENT PART NAME	IPL FIG. ITEM	REPLACEMENT PART NAME	SEE REPAIR TASK
11J-001	Single Door Assembly	11J-140	Scuff Plate	Replacement of the Bonded Parts Material No. 08-553 FASTBOND 10 - Formica Bonding Rigid Vinyl

Table 3376
Reference list for the replacement of permanent installed parts

(a) Remove the screw 11J-080 and the coat hook 11J-090.

(b) Remove and disassemble the ashtray assemblies 11J-120 as follows:

1 Remove the ashtray cover 11J-123 from the ashtray case 11J-125.

2 Remove the screws 11J-050 from the ashtray case 11J-125.

(c) Remove the screws 11J-030, the washers 11J-040 and the hinge 11J-010.

(d) Disassemble the hinge 11J-010 as follows:

WARNING: **BE CAREFUL WHEN YOU USE MATERIAL NO. 08-007 SEALANT, HIGH TEMPERATURE. OBEY THE MATERIAL MANUFACTURER'S INSTRUCTIONS.**

1 Remove the setscrews 11J-020 from the hinge 11J-010.

NOTE: **If necessary use a hot air blower to heat up the Material No. 08-007 Sealant, High Temperature to remove the setscrews 11J-020.**

(e) Remove the screws 11J-050 and the sections 11J-060, 11J-070.

(f) Remove the screws 11J-030.

(g) Removal and Disassembly of the Lavatory Simple Door-Latch 11J-100

1 Remove the knob 11J-106 from the lock 11J-102 and the inside face of the folding door assy with a spanner.

2 Turn the folding door assy over, lift the flap above the lock 11J-102 and remove the screws that install the release system 11J-104.

3 Remove the slider pin from the lock 11J-102.

4 Remove the release system 11J-104 and the lock 11J-102.

(h) Remove the threaded bolt 11J-110.

(i) Remove the screws 11J-033 and the latch assembly 11J-130 from the single door assembly 11J-001.

(j) Remove the screws 11J-160 and the air outlets 11J-150.

SUB TASK 25-41-51-040-121-B01
D2549030614200 D2549030614400 R225401625-000

2. Disassembly of the Door (11J-1)

NOTE: **See TABLE 3377 for the references for the replacement procedures of permanent installed parts.**

More data for bonded parts are given in column SEE REPAIR TASK. Use the data for the selection of the related repair solution.

IPL FIG. ITEM	COMPONENT PART NAME	IPL FIG. ITEM	REPLACEMENT PART NAME	SEE REPAIR TASK
11J-001	Single Door Assembly	11J-140	Scuff Plate	Replacement of the Bonded Parts Material No. 08-553 FASTBOND 10 - Formica Bonding Rigid Vinyl

Table 3377
Reference list for the replacement of permanent installed parts

(a) Remove the screw 11J-080 and the coat hook 11J-090.

(b) Remove and disassemble the ashtray assemblies 11J-120 as follows:

1 Remove the ashtray cover 11J-123 from the ashtray case 11J-125.

2 Remove the screws 11J-050 from the ashtray case 11J-125.

(c) Remove the screws 11J-030, the washers 11J-040 and the hinge 11J-010.

(d) Disassemble the hinge 11J-010 as follows:

WARNING: BE CAREFUL WHEN YOU USE MATERIAL NO. 08-007 SEALANT, HIGH TEMPERATURE. OBEY THE MATERIAL MANUFACTURER'S INSTRUCTIONS.

1 Remove the setscrews 11J-020 from the hinge 11J-010.

NOTE: If necessary use a hot air blower to heat up the Material No. 08-007 Sealant, High Temperature to remove the setscrews 11J-020.

(e) Remove the screws 11J-050 and the sections 11J-060, 11J-070.

(f) Remove the screws 11J-030.

(g) Removal and Disassembly of the Lavatory Simple Door-Latch 11J-100

1 Remove the knob 11J-106 from the lock 11J-102 and the inside face of the folding door assy with a spanner.

2 Turn the folding door assy over, lift the flap above the lock 11J-102 and remove the screws that install the release system 11J-104.

3 Remove the slider pin from the lock 11J-102.

4 Remove the release system 11J-104 and the lock 11J-102.

(h) Remove the threaded bolt 11J-110.

(i) Remove the screws 11J-035 and the latch assembly 11J-135 from the single door assembly 11J-001.

NOTE: For further instructions, see CMMV 25-41-60_80477 (latch assembly).

(j) Remove the screws 11J-160 and the air outlets 11J-150.

TASK 25-41-51-000-808-L01

D2549010400200 D2549010400600 D2549010401000 D2549010401800 D2549010404000 D2549010612600 D2549010613200 D2549010613400 D2549010614400 D2549020301800 D2549020400600 D2549020401000 D2549020402200 D2549020402400 D2549020404400 D2549020405200 D2549020405400 D2549020405800 D2549020406400 D2549020407200 D2549020407600 D2549020510400 D2549020510600 D2549020803200 D2549020803600 D2549020805200 D2549020805400 D2549020806600 D2549020809000 D2549020811600 D2549020812000 D2549020812400 D2549020812800 D2549020813000 D2549020814600 D2549030404000 D2549030404200 D2549030410800 D2549030411800 D2549030412000 D2549030414200 D2549030613600 D2549030614800 D2549030701600 D2549030703600 D2549030704000 R225401639-000 R225401639-002 R225401649-000 R225401683-000 R225401693-000

82. Disassembly of the Door

A. General

A complete disassembly of the component is not necessary and not recommended.

Do not disassemble the component more than it is necessary for:

- Cleaning
- Visual Inspection
- Replacement of defective parts.

B. Job Set-up Information

(1) Consumable Materials

REFERENCE	DESIGNATION
08-007	Sealant, High Temperature
	FASTBOND 10 - Formica Bonding Rigid Vinyl

Table 3378
Consumable Materials

(2) Fixtures, Tools, Test and Support Equipment

REFERENCE	DESIGNATION
	hot air blower

Table 3379
Fixtures, Tools, Test and Support Equipment

C. Procedure

WARNING: **BE CAREFUL WHEN YOU USE SOLVENTS/CLEANING AGENTS, SEALANTS AND OTHER MATERIALS. OBEY THE MATERIAL MANUFACTURER'S INSTRUCTIONS AND THE LOCAL REGULATIONS. MAKE SURE THAT THERE IS A GOOD FLOW OF AIR THROUGH THE WORK AREA. DO NOT BREATHE THE FUMES. DO NOT SMOKE. DO NOT USE THESE MATERIALS NEAR A FLAME, SPARKS OR SOURCES OF HEAT. USE PROTECTIVE CLOTHING, GOGGLES AND GLOVES. IF YOU GET ONE OF THESE MATERIALS ON YOUR SKIN OR IN YOUR EYES, FLUSH IT AWAY WITH A FLOW OF CLEAN WATER. IF YOU GET ONE OF THESE MATERIALS IN YOUR MOUTH, GET IMMEDIATE MEDICAL AID. IN GENERAL, THESE MATERIALS ARE POISONOUS, FLAMMABLE AND SKIN IRRITANTS.**

CAUTION: **DO ALL THE WORK ON A CLEAN, SOFT SURFACE TO PREVENT DAMAGE TO THE COMPONENTS.**

SUB TASK 25-41-51-040-122-A01

D2549010401800 D2549010404000 D2549010613200 D2549010614400
D2549020402200 D2549020402400 D2549020405800 D2549020407200
D2549020407600 D2549020510400 D2549020510600 D2549020803600
D2549020805200 D2549020805400 D2549020813000 D2549030404000
D2549030410800 D2549030411800 D2549030412000 D2549030414200
D2549030613600 D2549030614800 D2549030701600 D2549030703600
D2549030704000 R225401683-000

1. Disassembly of the Door (11K-1)

NOTE: **See TABLE 3380 for the references for the replacement procedures of permanent installed parts.**

More data for bonded parts are given in column SEE REPAIR TASK. Use the data for the selection of the related repair solution.

IPL FIG. ITEM	COMPONENT PART NAME	IPL FIG. ITEM	REPLACEMENT PART NAME	SEE REPAIR TASK
11K-001	Single Door Assembly	11K-140	Scuff Plate	Replacement of the Bonded Parts Material No. 08-553 FASTBOND 10 - Formica Bonding Rigid Vinyl

Table 3380
Reference list for the replacement of permanent installed parts

(a) Remove the screw 11K-080 and the coat hook 11K-090.

(b) Remove and disassemble the ashtray assemblies 11K-120 as follows:

1 Remove the ashtray cover 11K-123 from the ashtray case 11K-125.

2 Remove the screws 11K-050 from the ashtray case 11K-125.

(c) Remove the screws 11K-030, the washers 11K-040 and the hinge 11K-010.

(d) Disassemble the hinge 11K-010 as follows:

WARNING: **BE CAREFUL WHEN YOU USE MATERIAL NO. 08-007 SEALANT, HIGH TEMPERATURE. OBEY THE MATERIAL MANUFACTURER'S INSTRUCTIONS.**

1 Remove the setscrews 11K-020 from the hinge 11K-010.

NOTE: **If necessary use a hot air blower to heat up the Material No. 08-007 Sealant, High Temperature to remove the setscrews 11K-020.**

(e) Remove the screws 11K-050 and the sections 11K-060, 11K-070.

(f) Remove the screws 11K-030.

(g) Removal and Disassembly of the Lavatory Simple Door-Latch 11K-100

1 Remove the knob 11K-106 from the lock 11K-102 and the inside face of the folding door assy with a spanner.

2 Turn the folding door assy over, lift the flap above the lock 11K-102 and remove the screws that install the release system 11K-104.

3 Remove the slider pin from the lock 11K-102.

4 Remove the release system 11K-104 and the lock 11K-102.

(h) Remove the threaded bolt 11K-110.

(i) Remove the screws 11K-030 and the latch assembly 11K-130 from the single door assembly 11K-001.

NOTE: For further instructions, see CMMV 25-41-60_80477 (latch assembly).

(j) Remove the screws 11K-160 and the air outlets 11K-150.

SUB TASK 25-41-51-040-122-B01
D2549010400200 D2549010400600 D2549010401000 D2549010612600 D2549010613400 D2549020301800 D2549020400600 D2549020401000 D2549020404400 D2549020405200 D2549020405400 D2549020406400 D2549020803200 D2549020806600 D2549020809000 D2549020811600 D2549020812000 D2549020812400 D2549020812800 D2549020814600 D2549030404200 R225401639-000 R225401639-002 R225401649-000 R225401693-000

2. Disassembly of the Door (11K-1)

NOTE: **See TABLE 3381 for the references for the replacement procedures of permanent installed parts.**

More data for bonded parts are given in column SEE REPAIR TASK. Use the data for the selection of the related repair solution.

IPL FIG. ITEM	COMPONENT PART NAME	IPL FIG. ITEM	REPLACEMENT PART NAME	SEE REPAIR TASK
11K-001	Single Door Assembly	11K-140	Scuff Plate	Replacement of the Bonded Parts Material No. 08-553 FASTBOND 10 - Formica Bonding Rigid Vinyl

Table 3381
Reference list for the replacement of permanent installed parts

(a) Remove the screw 11K-080 and the coat hook 11K-090.

(b) Remove and disassemble the ashtray assemblies 11K-120 as follows:

1 Remove the ashtray cover 11K-123 from the ashtray case 11K-125.

2 Remove the screws 11K-050 from the ashtray case 11K-125.

(c) Remove the screws 11K-030, the washers 11K-040 and the hinge 11K-010.

(d) Disassemble the hinge 11K-010 as follows:

WARNING: **BE CAREFUL WHEN YOU USE MATERIAL NO. 08-007 SEALANT, HIGH TEMPERATURE. OBEY THE MATERIAL MANUFACTURER'S INSTRUCTIONS.**

1 Remove the setscrews 11K-020 from the hinge 11K-010.

NOTE: **If necessary use a hot air blower to heat up the Material No. 08-007 Sealant, High Temperature to remove the setscrews 11K-020.**

(e) Remove the screws 11K-050 and the sections 11K-060, 11K-070.

(f) Remove the screws 11K-030.

(g) Removal and Disassembly of the Lavatory Simple Door-Latch 11K-100

1 Remove the knob 11K-106 from the lock 11K-102 and the inside face of the folding door assy with a spanner.

2 Turn the folding door assy over, lift the flap above the lock 11K-102 and remove the screws that install the release system 11K-104.

3 Remove the slider pin from the lock 11K-102.

4 Remove the release system 11K-104 and the lock 11K-102.

(h) Remove the threaded bolt 11K-110.

(i) Remove the screws 11K-030 and the latch assembly 11K-135 from the single door assembly 11K-001.

(j) Remove the screws 11K-160 and the air outlets 11K-150.

TASK 25-41-51-000-808-M01
D2549010400400 D2549010612400 D2549030400000 D2549030401800 D2549030414600 D2549030603200 D2549030705600

83. Disassembly of the Door

A. General

A complete disassembly of the component is not necessary and not recommended.

Do not disassemble the component more than it is necessary for:

- Cleaning
- Visual Inspection
- Replacement of defective parts.

B. Job Set-up Information
(1) Consumable Materials

REFERENCE	DESIGNATION
08-007	Sealant, High Temperature
	FASTBOND 10 - Formica Bonding Rigid Vinyl

Table 3382
Consumable Materials

(2) Fixtures, Tools, Test and Support Equipment

REFERENCE	DESIGNATION
	hot air blower

Table 3383
Fixtures, Tools, Test and Support Equipment

C. Procedure

WARNING: **BE CAREFUL WHEN YOU USE SOLVENTS/CLEANING AGENTS, SEALANTS AND OTHER MATERIALS. OBEY THE MATERIAL MANUFACTURER'S INSTRUCTIONS AND THE LOCAL REGULATIONS. MAKE SURE THAT THERE IS A GOOD FLOW OF AIR THROUGH THE WORK AREA. DO NOT BREATHE THE FUMES. DO NOT SMOKE. DO NOT USE THESE MATERIALS NEAR A FLAME, SPARKS OR SOURCES OF HEAT. USE PROTECTIVE CLOTHING, GOGGLES AND GLOVES. IF YOU GET ONE OF THESE MATERIALS ON YOUR SKIN OR IN YOUR EYES, FLUSH IT AWAY WITH A FLOW OF CLEAN WATER. IF YOU GET ONE OF THESE MATERIALS IN YOUR MOUTH, GET IMMEDIATE MEDICAL AID. IN GENERAL, THESE MATERIALS ARE POISONOUS, FLAMMABLE AND SKIN IRRITANTS.**

CAUTION: **DO ALL THE WORK ON A CLEAN, SOFT SURFACE TO PREVENT DAMAGE TO THE COMPONENTS.**

SUB TASK 25-41-51-040-123-A01
D2549010400400 D2549010612400 D2549030400000 D2549030401800 D2549030603200

1. Disassembly of the Door (11L-1)

NOTE: **See TABLE 3384 for the references for the replacement procedures of permanent installed parts.**

More data for bonded parts are given in column SEE REPAIR TASK. Use the data for the selection of the related repair solution.

IPL FIG. ITEM	COMPONENT PART NAME	IPL FIG. ITEM	REPLACEMENT PART NAME	SEE REPAIR TASK
11L-001	Single Door Assembly	11L-160	Scuff Plate	Replacement of the Bonded Parts Material No. 08-553 FASTBOND 10 - Formica Bonding Rigid Vinyl

Table 3384
Reference list for the replacement of permanent installed parts

(a) Remove the screw 11L-080 and the coat hook 11L-090.

(b) Remove and disassemble the ashtray assemblies 11L-120 as follows:

1 Remove the ashtray cover 11L-130 from the ashtray case 11L-140.

2 Remove the screws 11L-050 from the ashtray case 11L-140.

(c) Remove the screws 11L-030, the washers 11L-040 and the hinge 11L-010.

(d) Disassemble the hinge 11L-010 as follows:

WARNING: BE CAREFUL WHEN YOU USE MATERIAL NO. 08-007 SEALANT, HIGH TEMPERATURE. OBEY THE MATERIAL MANUFACTURER'S INSTRUCTIONS.

1 Remove the setscrews 11L-020 from the hinge 11L-010.

NOTE: If necessary use a hot air blower to heat up the Material No. 08-007 Sealant, High Temperature to remove the setscrews 11L-020.

(e) Remove the screws 11L-050 and the sections 11L-060, 11L-070.

(f) Remove the screws 11L-030.

(g) Removal and Disassembly of the Lavatory Simple Door-Latch 11L-100

1 Remove the knob 11L-106 from the lock 11L-102 and the inside face of the folding door assy with a spanner.

2 Turn the folding door assy over, lift the flap above the lock 11L-102 and remove the screws that install the release system 11L-104.

3 Remove the slider pin from the lock 11L-102.

4 Remove the release system 11L-104 and the lock 11L-102.

(h) Remove the threaded bolt 11L-110.

(i) Remove the screws 11L-030 and the latch assembly 11L-150 from the single door assembly 11L-001.

NOTE: For further instructions, see CMMV 25-41-60_80477 (latch assembly).

(j) Remove the screws 11L-180 and the air outlets 11L-170.

SUB TASK 25-41-51-040-123-B01
D2549030414600 D2549030705600

2. Disassembly of the Door (11L-1)

NOTE: **See TABLE 3385 for the references for the replacement procedures of permanent installed parts.**

More data for bonded parts are given in column SEE REPAIR TASK. Use the data for the selection of the related repair solution.

IPL FIG. ITEM	COMPONENT PART NAME	IPL FIG. ITEM	REPLACEMENT PART NAME	SEE REPAIR TASK
11L-001	Single Door Assembly	11L-160	Scuff Plate	Replacement of the Bonded Parts Material No. 08-553 FASTBOND 10 - Formica Bonding Rigid Vinyl

Table 3385
Reference list for the replacement of permanent installed parts

(a) Remove the screw 11L-080 and the coat hook 11L-090.

(b) Remove and disassemble the ashtray assemblies 11L-120 as follows:

1 Remove the ashtray cover 11L-130 from the ashtray case 11L-140.

2 Remove the screws 11L-050 from the ashtray case 11L-140.

(c) Remove the screws 11L-030, the washers 11L-040 and the hinge 11L-010.

(d) Disassemble the hinge 11L-010 as follows:

WARNING: **BE CAREFUL WHEN YOU USE MATERIAL NO. 08-007 SEALANT, HIGH TEMPERATURE. OBEY THE MATERIAL MANUFACTURER'S INSTRUCTIONS.**

1 Remove the setscrews 11L-020 from the hinge 11L-010.

NOTE: **If necessary use a hot air blower to heat up the Material No. 08-007 Sealant, High Temperature to remove the setscrews 11L-020.**

(e) Remove the screws 11L-050 and the sections 11L-060, 11L-070.

(f) Remove the screws 11L-030.

(g) Removal and Disassembly of the Lavatory Simple Door-Latch 11L-100

1 Remove the knob 11L-106 from the lock 11L-102 and the inside face of the folding door assy with a spanner.

2 Turn the folding door assy over, lift the flap above the lock 11L-102 and remove the screws that install the release system 11L-104.

3 Remove the slider pin from the lock 11L-102.

4 Remove the release system 11L-104 and the lock 11L-102.

(h) Remove the threaded bolt 11L-110.

(i) Remove the screws 11L-030 and the latch assembly 11L-155 from the single door assembly 11L-001.

(j) Remove the screws 11L-180 and the air outlets 11L-170.

TASK 25-41-51-000-808-N01
D2547160900200 D2547160900400 D2549010402400 D2549010405200 D2549010405400
D2549010406400 D2549020300000 D2549020400800 D2549020406000 D2549020408200
D2549020410800 D2549020414600 D2549020414800 D2549020513800 D2549020813200
D2549020813400 D2549030408200 D2549030408400 D2549030409600 D2549030410000
D2549030410200 D2549030412200 D2549030412800 D2549030413400 D2549030414000
D2549030700600 D2549030704200 D2549030704400 D2549030704800 D2549030705200
R225401671-000 R225401671-002 R225401675-000 R225401689-004 R225401689-006

84. Disassembly of the Door

A. General

A complete disassembly of the component is not necessary and not recommended.

Do not disassemble the component more than it is necessary for:

- Cleaning
- Visual Inspection
- Replacement of defective parts.

B. Job Set-up Information
(1) Consumable Materials

REFERENCE	DESIGNATION
08-007	Sealant, High Temperature
	FASTBOND 10 - Formica Bonding Rigid Vinyl

Table 3386
Consumable Materials

(2) Fixtures, Tools, Test and Support Equipment

REFERENCE	DESIGNATION
	hot air blower

Table 3387
Fixtures, Tools, Test and Support Equipment

C. Procedure

WARNING: **BE CAREFUL WHEN YOU USE SOLVENTS/CLEANING AGENTS, SEALANTS AND OTHER MATERIALS. OBEY THE MATERIAL MANUFACTURER'S INSTRUCTIONS AND THE LOCAL REGULATIONS. MAKE SURE THAT THERE IS A GOOD FLOW OF AIR THROUGH THE WORK AREA. DO NOT BREATHE THE FUMES. DO NOT SMOKE. DO NOT USE THESE MATERIALS NEAR A FLAME, SPARKS OR SOURCES OF HEAT. USE PROTECTIVE CLOTHING, GOGGLES AND GLOVES. IF YOU GET ONE OF THESE MATERIALS ON YOUR SKIN OR IN YOUR EYES, FLUSH IT AWAY WITH A FLOW OF CLEAN WATER. IF YOU GET ONE OF THESE MATERIALS IN YOUR MOUTH, GET IMMEDIATE MEDICAL AID. IN GENERAL, THESE MATERIALS ARE POISONOUS, FLAMMABLE AND SKIN IRRITANTS.**

CAUTION: **DO ALL THE WORK ON A CLEAN, SOFT SURFACE TO PREVENT DAMAGE TO THE COMPONENTS.**

SUB TASK 25-41-51-040-124-A01

D2547160900200 D2547160900400 D2549010402400 D2549010405200
D2549010406400 D2549020408200 D2549020410800 D2549020414600
D2549020513800 D2549020813400 D2549030408200 D2549030408400
D2549030412200 D2549030412800 D2549030413400 D2549030704200
D2549030704400 D2549030705200 R225401689-004 R225401689-006

1. Disassembly of the Door (11M-1)

NOTE: **See TABLE 3388 for the references for the replacement procedures of permanent installed parts.**

More data for bonded parts are given in column SEE REPAIR TASK. Use the data for the selection of the related repair solution.

IPL FIG. ITEM	COMPONENT PART NAME	IPL FIG. ITEM	REPLACEMENT PART NAME	SEE REPAIR TASK
11M-001	Single Door Assembly	11M-160	Scuff Plate	Replacement of the Bonded Parts Material No. 08-553 FASTBOND 10 - Formica Bonding Rigid Vinyl

Table 3388
Reference list for the replacement of permanent installed parts

(a) Remove the screw 11M-080 and the coat hook 11M-090.

(b) Remove and disassemble the ashtray assemblies 11M-120 as follows:

1 Remove the ashtray cover 11M-130 from the ashtray case 11M-140.

2 Remove the screws 11M-050 from the ashtray case 11M-140.

(c) Remove the screws 11M-030, the washers 11M-040 and the hinge 11M-010.

(d) Disassemble the hinge 11M-010 as follows:

WARNING: BE CAREFUL WHEN YOU USE MATERIAL NO. 08-007 SEALANT, HIGH TEMPERATURE. OBEY THE MATERIAL MANUFACTURER'S INSTRUCTIONS.

1 Remove the setscrews 11M-020 from the hinge 11M-010.

NOTE: If necessary use a hot air blower to heat up the Material No. 08-007 Sealant, High Temperature to remove the setscrews 11M-020.

(e) Remove the screws 11M-050 and the sections 11M-060, 11M-070.

(f) Remove the screws 11M-030.

(g) Removal and Disassembly of the Lavatory Simple Door-Latch 11M-100

1 Remove the knob 11M-106 from the lock 11M-102 and the inside face of the folding door assy with a spanner.

2 Turn the folding door assy over, lift the flap above the lock 11M-102 and remove the screws that install the release system 11M-104.

3 Remove the slider pin from the lock 11M-102.

4 Remove the release system 11M-104 and the lock 11M-102.

(h) Remove the threaded bolt 11M-110.

(i) Remove the screws 11M-030 and the latch assembly 11M-150 from the single door assembly 11M-001.

(j) Remove the screws 11M-180 and the air outlets 11M-170.

SUB TASK 25-41-51-040-124-B01

D2549010405400 D2549020300000 D2549020400800 D2549020406000 D2549020414800 D2549020813200 D2549030409600 D2549030410000

D2549030410200 D2549030414000 D2549030700600 D2549030704800 R225401671-000 R225401671-002 R225401675-000

2. Disassembly of the Door (11M-1)

NOTE: **See TABLE 3389 for the references for the replacement procedures of permanent installed parts.**

More data for bonded parts are given in column SEE REPAIR TASK. Use the data for the selection of the related repair solution.

IPL FIG. ITEM	COMPONENT PART NAME	IPL FIG. ITEM	REPLACEMENT PART NAME	SEE REPAIR TASK
11M-001	Single Door Assembly	11M-160	Scuff Plate	Replacement of the Bonded Parts Material No. 08-553 FASTBOND 10 - Formica Bonding Rigid Vinyl

Table 3389
Reference list for the replacement of permanent installed parts

(a) Remove the screw 11M-080 and the coat hook 11M-090.

(b) Remove and disassemble the ashtray assemblies 11M-120 as follows:

1 Remove the ashtray cover 11M-130 from the ashtray case 11M-140.

2 Remove the screws 11M-050 from the ashtray case 11M-140.

(c) Remove the screws 11M-030, the washers 11M-040 and the hinge 11M-010.

(d) Disassemble the hinge 11M-010 as follows:

WARNING: **BE CAREFUL WHEN YOU USE MATERIAL NO. 08-007 SEALANT, HIGH TEMPERATURE. OBEY THE MATERIAL MANUFACTURER'S INSTRUCTIONS.**

1 Remove the setscrews 11M-020 from the hinge 11M-010.

NOTE: **If necessary use a hot air blower to heat up the Material No. 08-007 Sealant, High Temperature to remove the setscrews 11M-020.**

(e) Remove the screws 11M-050 and the sections 11M-060, 11M-070.

(f) Remove the screws 11M-030.

(g) Removal and Disassembly of the Lavatory Simple Door-Latch 11M-100

1 Remove the knob 11M-106 from the lock 11M-102 and the inside face of the folding door assy with a spanner.

2 Turn the folding door assy over, lift the flap above the lock 11M-102 and remove the screws that install the release system 11M-104.

3 Remove the slider pin from the lock 11M-102.

4 Remove the release system 11M-104 and the lock 11M-102.

(h) Remove the threaded bolt 11M-110.

(i) Remove the screws 11M-030 and the latch assembly 11M-155 from the single door assembly 11M-001.

NOTE: For further instructions, see CMMV 25-41-60_80477 (latch assembly).

(j) Remove the screws 11M-180 and the air outlets 11M-170.

TASK 25-41-51-000-808-P01

D2549010400000 D2549010400800 D2549010402000 D2549010402600 D2549010402800
D2549010513200 D2549010514200 D2549010601000 D2549010603000 D2549010603400
D2549010604000 D2549010605800 D2549010607400 D2549010608400 D2549010609000
D2549010610000 D2549010611600 D2549010612000 D2549010613800 D2549010614600
D2549020400200 D2549020403800 D2549020506600 D2549020510000 D2549020511600
D2549020606000 D2549020608800 D2549020609200 D2549020612000 D2549020702800
D2549020704600 D2549020706000 D2549020706400 D2549020707600 D2549020707800
D2549020708800 D2549020800000 D2549020802000 D2549020802600 D2549020805600
D2549020807800 D2549020808400 D2549020812600 D2549030506000 D2549030508400
D2549030510000 D2549030601000 D2549030601400 D2549030602200 D2549030604400
D2549030606600 D2549030608200 R225401160-000 R225401160-002 R225401192-000
R225401192-002 R225401629-000 R225401629-002 R225401643-000 R225401658-000

85. Disassembly of the Door

A. General

A complete disassembly of the component is not necessary and not recommended.

Do not disassemble the component more than it is necessary for:

- Cleaning
- Visual Inspection
- Replacement of defective parts.

B. Job Set-up Information

(1) Consumable Materials

REFERENCE	DESIGNATION
08-007	Sealant, High Temperature
	FASTBOND 10 - Formica Bonding Rigid Vinyl

Table 3390
Consumable Materials

(2) Fixtures, Tools, Test and Support Equipment

REFERENCE	DESIGNATION
	hot air blower

Table 3391
Fixtures, Tools, Test and Support Equipment

C. Procedure

WARNING: **BE CAREFUL WHEN YOU USE SOLVENTS/CLEANING AGENTS, SEALANTS AND OTHER MATERIALS. OBEY THE MATERIAL MANUFACTURER'S INSTRUCTIONS AND THE LOCAL REGULATIONS. MAKE SURE THAT THERE IS A GOOD FLOW OF AIR THROUGH THE WORK AREA. DO NOT BREATHE THE FUMES. DO NOT SMOKE. DO NOT USE THESE MATERIALS NEAR A FLAME, SPARKS OR SOURCES OF HEAT. USE PROTECTIVE CLOTHING, GOGGLES AND GLOVES. IF YOU GET ONE OF THESE MATERIALS ON YOUR SKIN OR IN YOUR EYES, FLUSH IT AWAY WITH A FLOW OF CLEAN WATER. IF YOU GET ONE OF THESE MATERIALS IN YOUR MOUTH, GET IMMEDIATE MEDICAL AID. IN GENERAL, THESE MATERIALS ARE POISONOUS, FLAMMABLE AND SKIN IRRITANTS.**

CAUTION: **DO ALL THE WORK ON A CLEAN, SOFT SURFACE TO PREVENT DAMAGE TO THE COMPONENTS.**

SUB TASK 25-41-51-040-125-A01

D2549010400800 D2549010402000 D2549010402800 D2549010603000 D2549010603400 D2549010605800 D2549010607400 D2549010608400 D2549010609000 D2549010611600 D2549010612000 D2549010613800 D2549010614600 D2549020400200 D2549020403800 D2549020510000 D2549020511600 D2549020609200 D2549020612000 D2549020702800 D2549020704600 D2549020706000 D2549020707600 D2549020707800 D2549020708800 D2549020802000 D2549020802600 D2549020805600 D2549020807800 D2549020808400 D2549020812600 D2549030506000 D2549030508400 D2549030510000 D2549030601000 D2549030601400 D2549030602200 D2549030604400 D2549030606600 D2549030608200 R225401160-000 R225401160-002 R225401192-000 R225401192-002 R225401629-000 R225401629-002 R225401643-000 R225401658-000

1. Disassembly of the Door (11N-1)

NOTE: **See TABLE 3392 for the references for the replacement procedures of permanent installed parts.**

More data for bonded parts are given in column SEE REPAIR TASK. Use the data for the selection of the related repair solution.

IPL FIG. ITEM	COMPONENT PART NAME	IPL FIG. ITEM	REPLACEMENT PART NAME	SEE REPAIR TASK
11N-001	Single Door Assembly	11N-160	Scuff Plate	Replacement of the Bonded Parts Material No. 08-553 FASTBOND 10 - Formica Bonding Rigid Vinyl

Table 3392
Reference list for the replacement of permanent installed parts

(a) Remove the screw 11N-080 and the coat hook 11N-090.

(b) Remove and disassemble the ashtray assemblies 11N-120 as follows:

1 Remove the ashtray cover 11N-130 from the ashtray case 11N-140.

2 Remove the screws 11N-050 from the ashtray case 11N-140.

(c) Remove the screws 11N-030, the washers 11N-040 and the hinge 11N-010.

(d) Disassemble the hinge 11N-010 as follows:

WARNING: **BE CAREFUL WHEN YOU USE MATERIAL NO. 08-007 SEALANT, HIGH TEMPERATURE. OBEY THE MATERIAL MANUFACTURER'S INSTRUCTIONS.**

1 Remove the setscrews 11N-020 from the hinge 11N-010.

NOTE: **If necessary use a hot air blower to heat up the Material No. 08-007 Sealant, High Temperature to remove the setscrews 11N-020.**

(e) Remove the screws 11N-050 and the sections 11N-060, 11N-070.

(f) Remove the screws 11N-030.

(g) Removal and Disassembly of the Lavatory Simple Door-Latch 11N-100

1 Remove the knob 11N-106 from the lock 11N-102 and the inside face of the folding door assy with a spanner.

2 Turn the folding door assy over, lift the flap above the lock 11N-102 and remove the screws that install the release system 11N-104.

3 Remove the slider pin from the lock 11N-102.

4 Remove the release system 11N-104 and the lock 11N-102.

(h) Remove the threaded bolt 11N-110.

(i) Remove the screws 11N-030 and the latch assembly 11N-150 from the single door assembly 11N-001.

(j) Remove the screws 11N-180 and the air outlets 11N-170.

SUB TASK 25-41-51-040-125-B01
D2549010400000 D2549010402600 D2549010513200 D2549010514200
D2549010601000 D2549010604000 D2549010610000 D2549020506600
D2549020606000 D2549020608800 D2549020706400 D2549020800000

2. Disassembly of the Door (11N-1)

NOTE: **See TABLE 3393 for the references for the replacement procedures of permanent installed parts.**

More data for bonded parts are given in column SEE REPAIR TASK. Use the data for the selection of the related repair solution.

IPL FIG. ITEM	COMPONENT PART NAME	IPL FIG. ITEM	REPLACEMENT PART NAME	SEE REPAIR TASK
11N-001	Single Door Assembly	11N-160	Scuff Plate	Replacement of the Bonded Parts Material No. 08-553 FASTBOND 10 - Formica Bonding Rigid Vinyl

Table 3393
Reference list for the replacement of permanent installed parts

(a) Remove the screw 11N-080 and the coat hook 11N-090.

(b) Remove and disassemble the ashtray assemblies 11N-120 as follows:

1 Remove the ashtray cover 11N-130 from the ashtray case 11N-140.

2 Remove the screws 11N-050 from the ashtray case 11N-140.

(c) Remove the screws 11N-030, the washers 11N-040 and the hinge 11N-010.

(d) Disassemble the hinge 11N-010 as follows:

WARNING: BE CAREFUL WHEN YOU USE MATERIAL NO. 08-007 SEALANT, HIGH TEMPERATURE. OBEY THE MATERIAL MANUFACTURER'S INSTRUCTIONS.

1 Remove the setscrews 11N-020 from the hinge 11N-010.

NOTE: If necessary use a hot air blower to heat up the Material No. 08-007 Sealant, High Temperature to remove the setscrews 11N-020.

(e) Remove the screws 11N-050 and the sections 11N-060, 11N-070.

(f) Remove the screws 11N-030.

(g) Removal and Disassembly of the Lavatory Simple Door-Latch 11N-100

1 Remove the knob 11N-106 from the lock 11N-102 and the inside face of the folding door assy with a spanner.

2 Turn the folding door assy over, lift the flap above the lock 11N-102 and remove the screws that install the release system 11N-104.

3 Remove the slider pin from the lock 11N-102.

4 Remove the release system 11N-104 and the lock 11N-102.

(h) Remove the threaded bolt 11N-110.

(i) Remove the screws 11N-030 and the latch assembly 11N-155 from the single door assembly 11N-001.

NOTE: For further instructions, see CMMV 25-41-60_80477 (latch assembly).

(j) Remove the screws 11N-180 and the air outlets 11N-170.

TASK 25-41-51-000-808-Q01
D2549010402200 D2549010405600 D2549020300800 D2549020301600 D2549020409600 D2549020411200 D2549020411600 D2549020411800 D2549020412200 D2549030410600 D2549030700800 D2549030701800 D2549030702000 D2549030703000 D2549030703200 D2549030704600 R225401627-004 R225401676-000 R225401808-000 R225401814-000

86. Disassembly of the Door

A. General

A complete disassembly of the component is not necessary and not recommended.

Do not disassemble the component more than it is necessary for:

- Cleaning
- Visual Inspection
- Replacement of defective parts.

B. Job Set-up Information
(1) Consumable Materials

REFERENCE	DESIGNATION
08-007	Sealant, High Temperature
	FASTBOND 10 - Formica Bonding Rigid Vinyl

Table 3394
Consumable Materials

(2) Fixtures, Tools, Test and Support Equipment

REFERENCE	DESIGNATION
	hot air blower

Table 3395
Fixtures, Tools, Test and Support Equipment

C. Procedure

WARNING: **BE CAREFUL WHEN YOU USE SOLVENTS/CLEANING AGENTS, SEALANTS AND OTHER MATERIALS. OBEY THE MATERIAL MANUFACTURER'S INSTRUCTIONS AND THE LOCAL REGULATIONS. MAKE SURE THAT THERE IS A GOOD FLOW OF AIR THROUGH THE WORK AREA. DO NOT BREATHE THE FUMES. DO NOT SMOKE. DO NOT USE THESE MATERIALS NEAR A FLAME, SPARKS OR SOURCES OF HEAT. USE PROTECTIVE CLOTHING, GOGGLES AND GLOVES. IF YOU GET ONE OF THESE MATERIALS ON YOUR SKIN OR IN YOUR EYES, FLUSH IT AWAY WITH A FLOW OF CLEAN WATER. IF YOU GET ONE OF THESE MATERIALS IN YOUR MOUTH, GET IMMEDIATE MEDICAL AID. IN GENERAL, THESE MATERIALS ARE POISONOUS, FLAMMABLE AND SKIN IRRITANTS.**

CAUTION: **DO ALL THE WORK ON A CLEAN, SOFT SURFACE TO PREVENT DAMAGE TO THE COMPONENTS.**

SUB TASK 25-41-51-040-126-A01

D2549010405600 D2549020300800 D2549020301600 D2549020409600
D2549020411200 D2549020411600 D2549020411800 D2549020412200
D2549030410600 D2549030700800 D2549030701800 D2549030703200
D2549030704600 R225401627-004 R225401808-000 R225401814-000

1. Disassembly of the Door (11P-1)

NOTE: **See TABLE 3396 for the references for the replacement procedures of permanent installed parts.**

More data for bonded parts are given in column SEE REPAIR TASK. Use the data for the selection of the related repair solution.

IPL FIG. ITEM	COMPONENT PART NAME	IPL FIG. ITEM	REPLACEMENT PART NAME	SEE REPAIR TASK
11P-001	Single Door Assembly	11P-160	Scuff Plate	Replacement of the Bonded Parts Material No. 08-553 FASTBOND 10 - Formica Bonding Rigid Vinyl

Table 3396
Reference list for the replacement of permanent installed parts

(a) Remove the screw 11P-080 and the coat hook 11P-090.

(b) Remove and disassemble the ashtray assemblies 11P-120 as follows:

1 Remove the ashtray cover 11P-130 from the ashtray case 11P-140.

2 Remove the screws 11P-050 from the ashtray case 11P-140.

(c) Remove the screws 11P-030, the washers 11P-040 and the hinge 11P-010.

(d) Disassemble the hinge 11P-010 as follows:

WARNING: BE CAREFUL WHEN YOU USE MATERIAL NO. 08-007 SEALANT, HIGH TEMPERATURE. OBEY THE MATERIAL MANUFACTURER'S INSTRUCTIONS.

1 Remove the setscrews 11P-020 from the hinge 11P-010.

NOTE: If necessary use a hot air blower to heat up the Material No. 08-007 Sealant, High Temperature to remove the setscrews 11P-020.

(e) Remove the screws 11P-050 and the sections 11P-060, 11P-070.

(f) Remove the screws 11P-030.

(g) Removal and Disassembly of the Lavatory Simple Door-Latch 11P-100

1 Remove the knob 11P-106 from the lock 11P-102 and the inside face of the folding door assy with a spanner.

2 Turn the folding door assy over, lift the flap above the lock 11P-102 and remove the screws that install the release system 11P-104.

3 Remove the slider pin from the lock 11P-102.

4 Remove the release system 11P-104 and the lock 11P-102.

(h) Remove the threaded bolt 11P-110.

(i) Remove the screws 11P-030 and the latch assembly 11P-150 from the single door assembly 11P-001.

(j) Remove the screws 11P-180 and the air outlets 11P-170.

SUB TASK 25-41-51-040-126-B01
D2549030702000 D2549030703000

2. Disassembly of the Door (11P-1)

NOTE: **See TABLE 3397 for the references for the replacement procedures of permanent installed parts.**

More data for bonded parts are given in column SEE REPAIR TASK. Use the data for the selection of the related repair solution.

IPL FIG. ITEM	COMPONENT PART NAME	IPL FIG. ITEM	REPLACEMENT PART NAME	SEE REPAIR TASK
11P-001	Single Door Assembly	11P-160	Scuff Plate	Replacement of the Bonded Parts Material No. 08-553 FASTBOND 10 - Formica Bonding Rigid Vinyl

Table 3397
Reference list for the replacement of permanent installed parts

(a) Remove the screw 11P-080 and the coat hook 11P-090.

(b) Remove and disassemble the ashtray assemblies 11P-120 as follows:

1 Remove the ashtray cover 11P-130 from the ashtray case 11P-140.

2 Remove the screws 11P-050 from the ashtray case 11P-140.

(c) Remove the screws 11P-030, the washers 11P-040 and the hinge 11P-010.

(d) Disassemble the hinge 11P-010 as follows:

WARNING: **BE CAREFUL WHEN YOU USE MATERIAL NO. 08-007 SEALANT, HIGH TEMPERATURE. OBEY THE MATERIAL MANUFACTURER'S INSTRUCTIONS.**

1 Remove the setscrews 11P-020 from the hinge 11P-010.

NOTE: **If necessary use a hot air blower to heat up the Material No. 08-007 Sealant, High Temperature to remove the setscrews 11P-020.**

(e) Remove the screws 11P-050 and the sections 11P-060, 11P-070.

(f) Remove the screws 11P-030.

(g) Removal and Disassembly of the Lavatory Simple Door-Latch 11P-100

1 Remove the knob 11P-106 from the lock 11P-102 and the inside face of the folding door assy with a spanner.

2 Turn the folding door assy over, lift the flap above the lock 11P-102 and remove the screws that install the release system 11P-104.

3 Remove the slider pin from the lock 11P-102.

4 Remove the release system 11P-104 and the lock 11P-102.

(h) Remove the threaded bolt 11P-110.

(i) Remove the screws 11P-030 and the latch assembly 11P-155 from the single door assembly 11P-001.

NOTE: For further instructions, see CMMV 25-41-60_80477 (latch assembly).

(j) Remove the screws 11P-180 and the air outlets 11P-170.

SUB TASK 25-41-51-040-126-C01
D2549010402200 R225401676-000

3. Disassembly of the Door (11P-1)

NOTE: **See TABLE 3398 for the references for the replacement procedures of permanent installed parts.**

More data for bonded parts are given in column SEE REPAIR TASK. Use the data for the selection of the related repair solution.

IPL FIG. ITEM	COMPONENT PART NAME	IPL FIG. ITEM	REPLACEMENT PART NAME	SEE REPAIR TASK
11P-001	Single Door Assembly	11P-160	Scuff Plate	Replacement of the Bonded Parts Material No. 08-553 FASTBOND 10 - Formica Bonding Rigid Vinyl
11P-001	Single Door Assembly	11P-190	Lavatory Placard	Replacement of the Self-adhesive Placards Self Adhesive

Table 3398
Reference list for the replacement of permanent installed parts

(a) Remove the screw 11P-080 and the coat hook 11P-090.

(b) Remove and disassemble the ashtray assemblies 11P-120 as follows:

1 Remove the ashtray cover 11P-130 from the ashtray case 11P-140.

2 Remove the screws 11P-050 from the ashtray case 11P-140.

(c) Remove the screws 11P-030, the washers 11P-040 and the hinge 11P-010.

(d) Disassemble the hinge 11P-010 as follows:

WARNING: **BE CAREFUL WHEN YOU USE MATERIAL NO. 08-007 SEALANT, HIGH TEMPERATURE. OBEY THE MATERIAL MANUFACTURER'S INSTRUCTIONS.**

1 Remove the setscrews 11P-020 from the hinge 11P-010.

NOTE: **If necessary use a hot air blower to heat up the Material No. 08-007 Sealant, High Temperature to remove the setscrews 11P-020.**

(e) Remove the screws 11P-050 and the sections 11P-060, 11P-070.

(f) Remove the screws 11P-030.

(g) Removal and Disassembly of the Lavatory Simple Door-Latch 11P-100

1 Remove the knob 11P-106 from the lock 11P-102 and the inside face of the folding door assy with a spanner.

2 Turn the folding door assy over, lift the flap above the lock 11P-102 and remove the screws that install the release system 11P-104.

3 Remove the slider pin from the lock 11P-102.

4 Remove the release system 11P-104 and the lock 11P-102.

(h) Remove the threaded bolt 11P-110.

(i) Remove the screws 11P-030 and the latch assembly 11P-155 from the single door assembly 11P-001.

NOTE: For further instructions, see CMMV 25-41-60_80477 (latch assembly).

(j) Remove the screws 11P-180 and the air outlets 11P-170.

TASK 25-41-51-000-808-R01
D2547161903000 D2549010504200 D2549010504400 D2549010504600 D2549010504800 D2549010507800 D2549010508400 D2549010508800 D2549010509000 D2549020500200 D2549020503600 D2549020601200 D2549020601800 D2549020603200 D2549030503600

87. Disassembly of the Door

A. General

A complete disassembly of the component is not necessary and not recommended.

Do not disassemble the component more than it is necessary for:

- Cleaning
- Visual Inspection
- Replacement of defective parts.

B. Job Set-up Information
(1) Consumable Materials

REFERENCE	DESIGNATION
08-007	Sealant, High Temperature
	FASTBOND 10 - Formica Bonding Rigid Vinyl

Table 3399
Consumable Materials

(2) Fixtures, Tools, Test and Support Equipment

REFERENCE	DESIGNATION
	hot air blower

Table 3400
Fixtures, Tools, Test and Support Equipment

C. Procedure

WARNING: **BE CAREFUL WHEN YOU USE SOLVENTS/CLEANING AGENTS, SEALANTS AND OTHER MATERIALS. OBEY THE MATERIAL MANUFACTURER'S INSTRUCTIONS AND THE LOCAL REGULATIONS. MAKE SURE THAT THERE IS A GOOD FLOW OF AIR THROUGH THE WORK AREA. DO NOT BREATHE THE FUMES. DO NOT SMOKE. DO NOT USE THESE MATERIALS NEAR A FLAME, SPARKS OR SOURCES OF HEAT. USE PROTECTIVE CLOTHING, GOGGLES AND GLOVES. IF YOU GET ONE OF THESE MATERIALS ON YOUR SKIN OR IN YOUR EYES, FLUSH IT AWAY WITH A FLOW OF CLEAN WATER. IF YOU GET ONE OF THESE MATERIALS IN YOUR MOUTH, GET IMMEDIATE MEDICAL AID. IN GENERAL, THESE MATERIALS ARE POISONOUS, FLAMMABLE AND SKIN IRRITANTS.**

CAUTION: **DO ALL THE WORK ON A CLEAN, SOFT SURFACE TO PREVENT DAMAGE TO THE COMPONENTS.**

SUB TASK 25-41-51-040-127-A01

D2547161903000 D2549010504200 D2549010504400 D2549010504600
D2549010504800 D2549010507800 D2549010508400 D2549010508800
D2549010509000 D2549020500200 D2549020503600 D2549020601200
D2549020601800 D2549020603200 D2549030503600

1. Disassembly of the Door (11Q-1)

NOTE: **See TABLE 3401 for the references for the replacement procedures of permanent installed parts.**

More data for bonded parts are given in column SEE REPAIR TASK. Use the data for the selection of the related repair solution.

IPL FIG. ITEM	COMPONENT PART NAME	IPL FIG. ITEM	REPLACEMENT PART NAME	SEE REPAIR TASK
11Q-001	Single Door Assembly	11Q-160	Scuff Plate	Replacement of the Bonded Parts Material No. 08-553 FASTBOND 10 - Formica Bonding Rigid Vinyl

Table 3401
Reference list for the replacement of permanent installed parts

(a) Remove the screw 11Q-080 and the coat hook 11Q-090.

(b) Remove and disassemble the ashtray assemblies 11Q-120 as follows:

1 Remove the ashtray cover 11Q-130 from the ashtray case 11Q-140.

2 Remove the screws 11Q-050 from the ashtray case 11Q-140.

(c) Remove the screws 11Q-030, the washers 11Q-040 and the hinge 11Q-010.

(d) Disassemble the hinge 11Q-010 as follows:

WARNING: BE CAREFUL WHEN YOU USE MATERIAL NO. 08-007 SEALANT, HIGH TEMPERATURE. OBEY THE MATERIAL MANUFACTURER'S INSTRUCTIONS.

1 Remove the setscrews 11Q-020 from the hinge 11Q-010.

NOTE: If necessary use a hot air blower to heat up the Material No. 08-007 Sealant, High Temperature to remove the setscrews 11Q-020.

(e) Remove the screws 11Q-050 and the sections 11Q-060, 11Q-070.

(f) Remove the screws 11Q-030.

(g) Removal and Disassembly of the Lavatory Simple Door-Latch 11Q-100

1 Remove the knob 11Q-106 from the lock 11Q-102 and the inside face of the folding door assy with a spanner.

2 Turn the folding door assy over, lift the flap above the lock 11Q-102 and remove the screws that install the release system 11Q-104.

3 Remove the slider pin from the lock 11Q-102.

4 Remove the release system 11Q-104 and the lock 11Q-102.

(h) Remove the threaded bolt 11Q-110.

(i) Remove the screws 11Q-030 and the latch assembly 11Q-150 from the single door assembly 11Q-001.

NOTE: For further instructions, see CMMV 25-41-60_80477 (latch assembly).

(j) Remove the screws 11Q-180 and the air outlets 11Q-170.

TASK 25-41-51-000-808-S01
D2549030610200 D2549030701200

88. Disassembly of the Door

A. General

A complete disassembly of the component is not necessary and not recommended.

Do not disassemble the component more than it is necessary for:

- Cleaning
- Visual Inspection
- Replacement of defective parts.

B. Job Set-up Information
(1) Consumable Materials

REFERENCE	DESIGNATION
08-007	Sealant, High Temperature
	FASTBOND 10 - Formica Bonding Rigid Vinyl

Table 3402
Consumable Materials

(2) Fixtures, Tools, Test and Support Equipment

REFERENCE	DESIGNATION
	hot air blower

Table 3403
Fixtures, Tools, Test and Support Equipment

C. Procedure

WARNING: **BE CAREFUL WHEN YOU USE SOLVENTS/CLEANING AGENTS, SEALANTS AND OTHER MATERIALS. OBEY THE MATERIAL MANUFACTURER'S INSTRUCTIONS AND THE LOCAL REGULATIONS. MAKE SURE THAT THERE IS A GOOD FLOW OF AIR THROUGH THE WORK AREA. DO NOT BREATHE THE FUMES. DO NOT SMOKE. DO NOT USE THESE MATERIALS NEAR A FLAME, SPARKS OR SOURCES OF HEAT. USE PROTECTIVE CLOTHING, GOGGLES AND GLOVES. IF YOU GET ONE OF THESE MATERIALS ON YOUR SKIN OR IN YOUR EYES, FLUSH IT AWAY WITH A FLOW OF CLEAN WATER. IF YOU GET ONE OF THESE MATERIALS IN YOUR MOUTH, GET IMMEDIATE MEDICAL AID. IN GENERAL, THESE MATERIALS ARE POISONOUS, FLAMMABLE AND SKIN IRRITANTS.**

CAUTION: **DO ALL THE WORK ON A CLEAN, SOFT SURFACE TO PREVENT DAMAGE TO THE COMPONENTS.**

SUB TASK 25-41-51-000-117-A01

1. Disassembly of the Door (11R-1)

NOTE: **See TABLE 3404 for the references for the replacement procedures of permanent installed parts.**

More data for bonded parts are given in column SEE REPAIR TASK. Use the data for the selection of the related repair solution.

IPL FIG. ITEM	COMPONENT PART NAME	IPL FIG. ITEM	REPLACEMENT PART NAME	SEE REPAIR TASK
11R-001	Single Door Assembly	11R-050	Scuff Plate	Replacement of the Bonded Parts Material No. 08-553 FASTBOND 10 - Formica Bonding Rigid Vinyl

Table 3404
Reference list for the replacement of permanent installed parts

(a) Remove the screw 11R-180 and the coat hook 11R-100.

(b) Remove and disassemble the ashtray assemblies 11R-070 as follows:

1 Remove the ashtray cover 11R-080 from the ashtray case 11R-090.

2 Remove the screws 11R-160 from the ashtray case 11R-090.

(c) Remove the screws 11R-140, the washers 11R-150 and the hinge 11R-010.

(d) Disassemble the hinge 11R-010 as follows:

WARNING: BE CAREFUL WHEN YOU USE MATERIAL NO. 08-007 SEALANT, HIGH TEMPERATURE. OBEY THE MATERIAL MANUFACTURER'S INSTRUCTIONS.

1 Remove the setscrews 11R-020 from the hinge 11R-010.

NOTE: If necessary use a hot air blower to heat up the Material No. 08-007 Sealant, High Temperature to remove the setscrews 11R-020.

(e) Remove the screws 11R-160 and the sections 11R-030, 11R-040.

(f) Remove the screws 11R-140.

(g) Removal and Disassembly of the Lavatory Simple Door-Latch 11R-110

1 Remove the knob 11R-116 from the lock 11R-112 and the inside face of the folding door assy with a spanner.

2 Turn the folding door assy over, lift the flap above the lock 11R-112 and remove the screws that install the release system 11R-114.

3 Remove the slider pin from the lock 11R-112.

4 Remove the release system 11R-114 and the lock 11R-112.

(h) Remove the threaded bolt 11R-130.

(i) Remove the screws 11R-140 and the latch assembly 11R-120 from the single door assembly 11R-001.

(j) Remove the screws 11R-170 and the air outlets 11R-060.

TASK 25-41-51-000-809-A01
D2549010500000 D2549010500600 D2549010500800 D2549010501200 D2549010501400 D2549010501800 D2549010502200 D2549010502400 D2549010502600 D2549010503600 D2549010503800 D2549010504200 D2549010504400 D2549010504600 D2549010505200 D2549010505800 D2549020500400 D2549020500800 D2549020501800 D2549020502400 D2549020502600 D2549020504000 D2549020600000 D2549020600200 D2549030500400 D2549030500600 D2549030501000 D2549030501200 D2549030501400 R225401146-000 R225401146-002 R225401188-000 R225401188-002

89. Removal of the Toilet Unit and of the Toilet Shroud

A. General

A complete disassembly of the component is not necessary and not recommended.

Do not disassemble the component more than it is necessary for:

- Cleaning
- Visual Inspection
- Replacement of defective parts.

B. Job Set-up Information
(1) Consumable Materials

REFERENCE	DESIGNATION
08-018	Solvent-Based Synthetic Rubber Adhesive
08-010A	Epoxy Resin and Hardener Adhesive
08-026	Adhesive/Sealant one Part, RTV Silicone Rubber
	SICOMET 63 - Cyanacrylat Adhesive

Table 3405
Consumable Materials

C. Procedure

WARNING: **BE CAREFUL WHEN YOU USE SOLVENTS/CLEANING AGENTS, SEALANTS AND OTHER MATERIALS. OBEY THE MATERIAL MANUFACTURER'S INSTRUCTIONS AND THE LOCAL REGULATIONS. MAKE SURE THAT THERE IS A GOOD FLOW OF AIR THROUGH THE WORK AREA. DO NOT BREATHE THE FUMES. DO NOT SMOKE. DO NOT USE THESE MATERIALS NEAR A FLAME, SPARKS OR SOURCES OF HEAT. USE PROTECTIVE CLOTHING, GOGGLES AND GLOVES. IF YOU GET ONE OF THESE MATERIALS ON YOUR SKIN OR IN YOUR EYES, FLUSH IT AWAY WITH A FLOW OF CLEAN WATER. IF YOU GET ONE OF THESE MATERIALS IN YOUR MOUTH, GET IMMEDIATE MEDICAL AID. IN GENERAL, THESE MATERIALS ARE POISONOUS, FLAMMABLE AND SKIN IRRITANTS.**

CAUTION: **DO ALL THE WORK ON A CLEAN, SOFT SURFACE TO PREVENT DAMAGE TO THE COMPONENTS.**

SUB TASK 25-41-51-010-058-A01

D2549010500600 D2549010501400 D2549010501800 D2549010502200 D2549010502400 D2549010503600 D2549010504200 D2549010504400 D2549010504600 D2549010505200 D2549010505800 D2549020500400 D2549020500800 D2549020501800 D2549020502400 D2549020502600 D2549020504000 D2549020600000 D2549020600200 D2549030500400 D2549030501000 D2549030501200 D2549030501400 R225401146-000 R225401146-002 R225401188-000 R225401188-002

1. Removal of the Toilet Unit and of the Toilet Shroud (12-1)

NOTE: **See TABLE 3406 for the references for the replacement procedures of permanent installed parts.**

More data for bonded parts are given in column SEE REPAIR TASK. Use the data for the selection of the related repair solution.

IPL FIG. ITEM	COMPONENT PART NAME	IPL FIG. ITEM	REPLACEMENT PART NAME	SEE REPAIR TASK
12-001 12-010 12-011	Toilet Unit and Toilet Shroud Toilet Shroud Assembly Colourless Toilet Shroud	12-012 12-013	Colourless Toilet Shroud Colourless Ring Cover	Replacement of the Bonded Parts Material No. 08-018 Solvent-Based Synthetic

Table 3406
Reference list for the replacement of permanent installed parts

				Rubber Adhesive
12-001 12-010	Toilet Unit and Toilet Shroud Toilet Shroud Assembly	12-011 12-020	Colourless Toilet Shroud Spacer	Replacement of the Bonded Parts Material No. 08-010A Epoxy Resin and Hardener Adhesive
12-001 12-010	Toilet Unit and Toilet Shroud Toilet Shroud Assembly	12-030	Hose Section	Replacement of the Bonded Parts Material No. 08-026 Adhe-sive/Sealant one Part, RTV Silicone Rubber
12-001 12-060 12-064	Toilet Unit and Toilet Shroud Toilet Seat Assembly Unpainted Toilet Cover	12-065	Round Bumper	Replacement of the Bonded Parts Material No. 08-738 SICO-MET 63 - Cy-anacrylat Adhesive

Table 3406
Reference list for the replacement of permanent installed parts

12-001 12-060 12-066	Toilet Unit and Toilet Shroud Toilet Seat Assembly Unpainted Toilet Seat Assembly	12-067	Round Bumper	Replacement of the Bonded Parts Material No. 08-738 SICO-MET 63 - Cy-anacrylat Adhesive
12-001 12-060 12-066	Toilet Unit and Toilet Shroud Toilet Seat Assembly Unpainted Toilet Seat Assembly	12-068	Unpainted Buffer	Replacement of the Bonded Parts Material No. 08-738 SICO-MET 63 - Cy-anacrylat Adhesive

Table 3406
Reference list for the replacement of permanent installed parts

(b) Remove the screws 12-040, the nuts 12-050 and the toilet shroud assembly 12-010 from the lavatory structure.

(c) Remove the nuts 12-061, the gaskets 12-062 and the toilet seat assembly 12-060 from the toilet shroud assembly 12-010.

(d) Disassemble the toilet seat assembly 12-060 as follows:

1 Remove the unpainted fasteners 12-063 and the unpainted toilet cover 12-064 from the unpainted toilet seat assembly 12-066.

(e) Remove the screws 12-090, the washers 12-100 and the support bracket 12-080 from the lavatory structure.

(f) Remove the screws 12-090, the washers 12-100 and the support bracket 12-070 from the lavatory structure.

(g) Remove the ground cable from the toilet assembly 12-110.

NOTE: For further instructions, see CMMV 38-34-16_29780 (toilet assembly).

(h) Remove the bolts 12-120, the lock washers 12-130, the washers 12-140 and the toilet assembly 12-110 from the lavatory structure.

SUB TASK 25-41-51-010-058-B01
D2549010500000 D2549010500800 D2549010501200 D2549010502600 D2549010503800 D2549030500600

2. Removal of the Toilet Unit and of the Toilet Shroud (12-1)

NOTE: **See TABLE 3407 for the references for the replacement procedures of permanent installed parts.**

More data for bonded parts are given in column SEE REPAIR TASK. Use the data for the selection of the related repair solution.

IPL FIG. ITEM	COMPONENT PART NAME	IPL FIG. ITEM	REPLACEMENT PART NAME	SEE REPAIR TASK
12-001 12-010 12-011	Toilet Unit and Toilet Shroud Toilet Shroud Assembly Colourless Toilet Shroud	12-012 12-013	Colourless Toilet Shroud Colourless Ring Cover	Replacement of the Bonded Parts Material No. 08-018 Solvent-Based Synthetic Rubber Adhesive
12-001 12-010	Toilet Unit and Toilet Shroud Toilet Shroud Assembly	12-011 12-020	Colourless Toilet Shroud Spacer	Replacement of the Bonded Parts Material No. 08-010A Epoxy Resin and Hardener Adhesive
12-001 12-010	Toilet Unit and Toilet Shroud Toilet Shroud Assembly	12-030	Hose Section	Replacement of the Bonded Parts Material No. 08-026 Adhesive/ Sealant one

Table 3407
Reference list for the replacement of permanent installed parts

				Part, RTV Silicone Rubber
12-001 12-060 12-064	Toilet Unit and Toilet Shroud Toilet Seat Assembly Unpainted Toilet Cover	12-065	Round Bumper	Replacement of the Bonded Parts Material No. 08-738 SICOMET 63 - Cyanacrylat Adhesive
12-001 12-060 12-066	Toilet Unit and Toilet Shroud Toilet Seat Assembly Unpainted Toilet Seat Assembly	12-067	Round Bumper	Replacement of the Bonded Parts Material No. 08-738 SICOMET 63 - Cyanacrylat Adhesive
12-001 12-060 12-066	Toilet Unit and Toilet Shroud Toilet Seat Assembly Unpainted Toilet Seat Assembly	12-068	Unpainted Buffer	Replacement of the Bonded Parts Material No. 08-738 SICOMET 63 - Cyanacrylat Adhesive

Table 3407
Reference list for the replacement of permanent installed parts

(b) Remove the screws 12-040, the nuts 12-050 and the toilet shroud assembly 12-010 from the lavatory structure.

(c) Remove the nuts 12-061, the gaskets 12-062 and the toilet seat assembly 12-060 from the toilet shroud assembly 12-010.

(d) Disassemble the toilet seat assembly 12-060 as follows:

1 Remove the unpainted fasteners 12-063 and the unpainted toilet cover 12-064 from the unpainted toilet seat assembly 12-066.

(e) Remove the screws 12-150, the washers 12-100 and the support bracket 12-080 from the lavatory structure.

(f) Remove the screws 12-091, the washers 12-100 and the support bracket 12-070 from the lavatory structure.

(g) Remove the ground cable from the toilet assembly 12-110.

NOTE: For further instructions, see CMMV 38-34-16_29780 (toilet assembly).

(h) Remove the bolts 12-120, the lock washers 12-130, the washers 12-140 and the toilet assembly 12-110 from the lavatory structure.

TASK 25-41-51-000-809-B01

D2549010502000 D2549010504800 D2549010505000 D2549010505400 D2549010505600
D2549010506000 D2549010506200 D2549010506400 D2549010506800 D2549010507000
D2549010507200 D2549010507400 D2549010507600 D2549010507800 D2549010508000
D2549010508200 D2549010508400 D2549010508600 D2549010508800 D2549010509200
D2549010511200 D2549020500000 D2549020500600 D2549020501000 D2549020501400
D2549020502800 D2549020503200 D2549020503800 D2549020504200 D2549020504400
D2549020504600 D2549020504800 D2549020505000 D2549020505200 D2549020505400
D2549020505800 D2549020506000 D2549020600400 D2549020600800 D2549020601000
D2549020601200 D2549020601400 D2549020601600 D2549020601800 D2549020602000
D2549020602400 D2549020602800 D2549020603000 D2549020603200 D2549020603400
D2549020603600 D2549020604000 D2549020606400 D2549020606600 D2549030500800
D2549030501600 D2549030501800 D2549030502000 D2549030502200 D2549030502400
D2549030502600 D2549030502800 D2549030503000 D2549030503200 D2549030503400
D2549030503600 R225401107-002 R225401115-002 R225401128-000 R225401133-000
R225401134-000 R225401139-000 R225401145-000 R225401188-004 R225401188-006

90. Removal of the Toilet Unit and of the Toilet Shroud

A. General

A complete disassembly of the component is not necessary and not recommended.

Do not disassemble the component more than it is necessary for:

- Cleaning
- Visual Inspection
- Replacement of defective parts.

B. Job Set-up Information
(1) Consumable Materials

REFERENCE	DESIGNATION
08-018	Solvent-Based Synthetic Rubber Adhesive
08-010A	Epoxy Resin and Hardener Adhesive

Table 3408
Consumable Materials

08-026	Adhesive/Sealant one Part, RTV Silicone Rubber
	SICOMET 63 - Cyanacrylat Adhesive

Table 3408
Consumable Materials

C. Procedure

WARNING: **BE CAREFUL WHEN YOU USE SOLVENTS/CLEANING AGENTS, SEALANTS AND OTHER MATERIALS. OBEY THE MATERIAL MANUFACTURER'S INSTRUCTIONS AND THE LOCAL REGULATIONS. MAKE SURE THAT THERE IS A GOOD FLOW OF AIR THROUGH THE WORK AREA. DO NOT BREATHE THE FUMES. DO NOT SMOKE. DO NOT USE THESE MATERIALS NEAR A FLAME, SPARKS OR SOURCES OF HEAT. USE PROTECTIVE CLOTHING, GOGGLES AND GLOVES. IF YOU GET ONE OF THESE MATERIALS ON YOUR SKIN OR IN YOUR EYES, FLUSH IT AWAY WITH A FLOW OF CLEAN WATER. IF YOU GET ONE OF THESE MATERIALS IN YOUR MOUTH, GET IMMEDIATE MEDICAL AID. IN GENERAL, THESE MATERIALS ARE POISONOUS, FLAMMABLE AND SKIN IRRITANTS.**

CAUTION: **DO ALL THE WORK ON A CLEAN, SOFT SURFACE TO PREVENT DAMAGE TO THE COMPONENTS.**

SUB TASK 25-41-51-010-059-A01

D2549010502000 D2549010504800 D2549010505000 D2549010505400 D2549010505600 D2549010506200 D2549010506400 D2549010506800 D2549010507000 D2549010507200 D2549010507400 D2549010507800 D2549010508000 D2549010508200 D2549010508400 D2549010508600 D2549010508800 D2549010509200 D2549010511200 D2549020500000 D2549020500600 D2549020501000 D2549020501400 D2549020502800 D2549020503200 D2549020503800 D2549020504200 D2549020504400 D2549020504600 D2549020505000 D2549020505200 D2549020505400 D2549020505800 D2549020506000 D2549020600400 D2549020600800 D2549020601000 D2549020601200 D2549020601400 D2549020601600 D2549020601800 D2549020602000 D2549020602400 D2549020602800 D2549020603000 D2549020603200 D2549020603400 D2549020603600 D2549020604000 D2549020606400 D2549020606600 D2549030500800 D2549030501600 D2549030501800 D2549030502000 D2549030502200 D2549030502400 D2549030502600 D2549030502800 D2549030503200 D2549030503400 D2549030503600 R225401107-002 R225401115-002 R225401128-000 R225401133-000 R225401134-000 R225401139-000 R225401145-000 R225401188-004 R225401188-006

1. Removal of the Toilet Unit and of the Toilet Shroud (12A-1)

NOTE: **See TABLE 3409 for the references for the replacement procedures of permanent installed parts.**

More data for bonded parts are given in column SEE REPAIR TASK. Use the data for the selection of the related repair solution.

IPL FIG. ITEM	COMPONENT PART NAME	IPL FIG. ITEM	REPLACEMENT PART NAME	SEE REPAIR TASK
12A-001 12A-010 12A-011	Toilet Unit and Toilet Shroud Toilet Shroud Assembly Colourless Toilet Shroud	12A-012 12A-013	Colourless Toilet Shroud Colourless Ring Cover	Replacement of the Bonded Parts Material No. 08-018 Solvent-Based Synthetic Rubber Adhesive
12A-001 12A-010	Toilet Unit and Toilet Shroud Toilet Shroud Assembly	12A-011 12A-020	Colourless Toilet Shroud Spacer	Replacement of the Bonded Parts Material No. 08-010A Epoxy Resin and Hardener Adhesive
12A-001 12A-010	Toilet Unit and Toilet Shroud Toilet Shroud Assembly	12A-030	Hose Section	Replacement of the Bonded Parts Material No. 08-026 Adhesive/Sealant one Part, RTV Silicone Rubber

Table 3409
Reference list for the replacement of permanent installed parts

12A-001 12A-060 12A-100	Toilet Unit and Toilet Shroud Toilet Seat Assembly Unpainted Toilet Cover	12A-110	Round Bumper	Replace-ment of the Bonded Parts Material No. 08-738 SI-COMET 63 - Cyanacrylat Adhesive
12A-001 12A-060 12A-120	Toilet Unit and Toilet Shroud Toilet Seat Assembly Unpainted Toilet Seat Assembly	12A-130	Round Bumper	Replace-ment of the Bonded Parts Material No. 08-738 SI-COMET 63 - Cyanacrylat Adhesive
12A-001 12A-060 12A-120	Toilet Unit and Toilet Shroud Toilet Seat Assembly Unpainted Toilet Seat Assembly	12A-140	Unpainted Buffer	Replace-ment of the Bonded Parts Material No. 08-738 SI-COMET 63 - Cyanacrylat Adhesive

Table 3409
Reference list for the replacement of permanent installed parts

(b) Remove the screws 12A-040, the nuts 12A-050 and the toilet shroud assembly 12A-010 from the lavatory structure.

(c) Remove the nuts 12A-070, the gaskets 12A-080 and the toilet seat assembly 12A-060 from the toilet shroud assembly 12A-010.

(d) Disassemble the toilet seat assembly 12A-060 as follows:

1 Remove the unpainted fasteners 12A-090 and the unpainted toilet cover 12A-100 from the unpainted toilet seat assembly 12A-120.

(e) Remove the screws 12A-170, the washers 12A-180 and the support bracket 12A-150 from the lavatory structure.

(f) Remove the screws 12A-170, the washers 12A-180 and the support bracket 12A-160 from the lavatory structure.

(g) Remove the ground cable from the toilet assembly 12A-190.

NOTE: For further instructions, see CMMV 38-34-16_29780 (toilet assembly).

(h) Remove the bolts 12A-200, the lock washers 12A-210, the washers 12A-220 and the toilet assembly 12A-190 from the lavatory structure.

SUB TASK 25-41-51-010-059-B01
D2549010506000 D2549010507600 D2549020504800 D2549030503000

2. Removal of the Toilet Unit and of the Toilet Shroud (12A-1)

NOTE: See TABLE 3410 for the references for the replacement procedures of permanent installed parts.

More data for bonded parts are given in column SEE REPAIR TASK. Use the data for the selection of the related repair solution.

IPL FIG. ITEM	COMPONENT PART NAME	IPL FIG. ITEM	REPLACEMENT PART NAME	SEE REPAIR TASK
12A-001 12A-010 12A-011	Toilet Unit and Toilet Shroud Toilet Shroud Assembly Colourless Toilet Shroud	12A-012 12A-013	Colourless Toilet Shroud Colourless Ring Cover	Replacement of the Bonded Parts Material No. 08-018 Solvent-Based Synthetic Rubber Adhesive
12A-001 12A-010	Toilet Unit and Toilet Shroud	12A-011 12A-020	Colourless Toilet Shroud Spacer	Replacement of the Bonded Parts

Table 3410
Reference list for the replacement of permanent installed parts

	Toilet Shroud Assembly			Material No. 08-010A Epoxy Resin and Hard-ener Adhesive
12A-001 12A-010	Toilet Unit and Toilet Shroud Toilet Shroud Assembly	12A-030	Hose Section	Replace-ment of the Bonded Parts Material No. 08-026 Ad-hesive/Sea-lant one Part, RTV Silicone Rubber
12A-001 12A-060 12A-100	Toilet Unit and Toilet Shroud Toilet Seat Assembly Unpainted Toilet Cover	12A-110	Round Bumper	Replace-ment of the Bonded Parts Material No. 08-738 SI-COMET 63 - Cyanacrylat Adhesive

Table 3410
Reference list for the replacement of permanent installed parts

12A-001 12A-060 12A-120	Toilet Unit and Toilet Shroud Toilet Seat Assembly Unpainted Toilet Seat Assembly	12A-130	Round Bumper	Replace-ment of the Bonded Parts Material No. 08-738 SI-COMET 63 - Cyanacrylat Adhesive
12A-001 12A-060 12A-120	Toilet Unit and Toilet Shroud Toilet Seat Assembly Unpainted Toilet Seat Assembly	12A-140	Unpainted Buffer	Replace-ment of the Bonded Parts Material No. 08-738 SI-COMET 63 - Cyanacrylat Adhesive

Table 3410
Reference list for the replacement of permanent installed parts

(b) Remove the screws 12A-040, the nuts 12A-050 and the toilet shroud assembly 12A-010 from the lavatory structure.

(c) Remove the nuts 12A-070, the gaskets 12A-080 and the toilet seat assembly 12A-060 from the toilet shroud assembly 12A-010.

(d) Disassemble the toilet seat assembly 12A-060 as follows:

1 Remove the unpainted fasteners 12A-090 and the unpainted toilet cover 12A-100 from the unpainted toilet seat assembly 12A-120.

(e) Remove the screws 12A-171, the washers 12A-180 and the support bracket 12A-150 from the lavatory structure.

(f) Remove the screws 12A-230, the washers 12A-180 and the support bracket 12A-160 from the lavatory structure.

(g) Remove the ground cable from the toilet assembly 12A-190.

NOTE: For further instructions, see CMMV 38-34-16_29780 (toilet assembly).

(h) Remove the bolts 12A-200, the lock washers 12A-210, the washers 12A-220 and the toilet assembly 12A-190 from the lavatory structure.

TASK 25-41-51-000-809-C01
D2549010500400 D2549010501000 D2549010501600 D2549010502800 D2549010503200 D2549010503400 D2549020500200 D2549020501200 D2549020501600 D2549020502000 D2549020503000 D2549020503400 D2549020503600 D2549020602600 D2549020603800 D2549020607200 D2549030500200 R225401107-000

91. Removal of the Toilet Unit and of the Toilet Shroud

A. General

A complete disassembly of the component is not necessary and not recommended.

Do not disassemble the component more than it is necessary for:

- Cleaning
- Visual Inspection
- Replacement of defective parts.

B. Job Set-up Information
(1) Consumable Materials

REFERENCE	DESIGNATION
08-018	Solvent-Based Synthetic Rubber Adhesive
08-010A	Epoxy Resin and Hardener Adhesive
08-026	Adhesive/Sealant one Part, RTV Silicone Rubber
	SICOMET 63 - Cyanacrylat Adhesive

Table 3411
Consumable Materials

C. Procedure

WARNING: **BE CAREFUL WHEN YOU USE SOLVENTS/CLEANING AGENTS, SEALANTS AND OTHER MATERIALS. OBEY THE MATERIAL MANUFACTURER'S INSTRUCTIONS AND THE LOCAL REGULATIONS. MAKE SURE THAT THERE IS A GOOD FLOW OF AIR THROUGH THE WORK AREA. DO NOT BREATHE THE FUMES. DO NOT SMOKE. DO NOT USE THESE MATERIALS NEAR A FLAME, SPARKS OR SOURCES OF HEAT. USE PROTECTIVE CLOTHING, GOGGLES AND GLOVES. IF YOU GET ONE OF THESE MATERIALS ON YOUR SKIN OR IN YOUR EYES, FLUSH IT AWAY WITH A FLOW OF CLEAN WATER. IF YOU GET ONE OF THESE MATERIALS IN YOUR MOUTH, GET IMMEDIATE MEDICAL AID. IN GENERAL, THESE MATERIALS ARE POISONOUS, FLAMMABLE AND SKIN IRRITANTS.**

CAUTION: **DO ALL THE WORK ON A CLEAN, SOFT SURFACE TO PREVENT DAMAGE TO THE COMPONENTS.**

SUB TASK 25-41-51-010-060-A01

1. Removal of the Toilet Unit and of the Toilet Shroud (12B-1)

NOTE: **See TABLE 3412 for the references for the replacement procedures of permanent installed parts.**

More data for bonded parts are given in column SEE REPAIR TASK. Use the data for the selection of the related repair solution.

IPL FIG. ITEM	COMPONENT PART NAME	IPL FIG. ITEM	REPLACEMENT PART NAME	SEE REPAIR TASK
12B-001 12B-010 12B-011	Toilet Unit and Toilet Shroud Toilet Shroud Assembly Colourless Toilet Shroud	12B-012 12B-013	Colourless Toilet Shroud Colourless Ring Cover	Replacement of the Bonded Parts Material No. 08-018 Solvent-Based Synthetic Rubber Adhesive
12B-001 12B-010	Toilet Unit and Toilet Shroud Toilet Shroud Assembly	12B-011 12B-020	Colourless Toilet Shroud Spacer	Replacement of the Bonded Parts

Table 3412
Reference list for the replacement of permanent installed parts

				Material No. 08-010A Epoxy Resin and Hardener Adhesive
12B-001 12B-010	Toilet Unit and Toilet Shroud Toilet Shroud Assembly	12B-030	Hose Section	Replacement of the Bonded Parts Material No. 08-026 Adhesive/Sealant one Part, RTV Silicone Rubber
12B-001 12B-060 12B-100	Toilet Unit and Toilet Shroud Toilet Seat Assembly Unpainted Toilet Cover	12B-110	Round Bumper	Replacement of the Bonded Parts Material No. 08-738 SICOMET 63 - Cyanacrylat Adhesive

Table 3412
Reference list for the replacement of permanent installed parts

12B-001 12B-060 12B-120	Toilet Unit and Toilet Shroud Toilet Seat Assembly Unpainted Toilet Seat Assembly	12B-130	Round Bumper	Replacement of the Bonded Parts Material No. 08-738 SI-COMET 63 - Cyanacrylat Adhesive
12B-001 12B-060 12B-120	Toilet Unit and Toilet Shroud Toilet Seat Assembly Unpainted Toilet Seat Assembly	12B-140	Unpainted Buffer	Replacement of the Bonded Parts Material No. 08-738 SI-COMET 63 - Cyanacrylat Adhesive

Table 3412
Reference list for the replacement of permanent installed parts

(b) Remove the screws 12B-040, the nuts 12B-050 and the toilet shroud assembly 12B-010 from the lavatory structure.

(c) Remove the nuts 12B-070, the gaskets 12B-080 and the toilet seat assembly 12B-060 from the toilet shroud assembly 12B-010.

(d) Disassemble the toilet seat assembly 12B-060 as follows:

1 Remove the unpainted fasteners 12B-090 and the unpainted toilet cover 12B-100 from the unpainted toilet seat assembly 12B-120.

(e) Remove the screws 12B-170, the washers 12B-180 and the support bracket 12B-160 from the lavatory structure.

(f) Remove the screws 12B-170, the washers 12B-180 and the support bracket 12B-150 from the lavatory structure.

(g) Remove the ground cable from the toilet assembly 12B-190.

NOTE: For further instructions, see CMMV 38-34-16_29780 (toilet assembly).

(h) Remove the bolts 12B-200, the lock washers 12B-210, the washers 12B-220 and the toilet assembly 12B-190 from the lavatory structure.

TASK 25-41-51-000-809-D01

D2549010509400 D2549010509600 D2549010509800 D2549010510000 D2549010510200
D2549010510400 D2549010510600 D2549010510800 D2549010511000 D2549010511400
D2549010511600 D2549010511800 D2549010512000 D2549010512200 D2549010512400
D2549010512600 D2549010513000 D2549010513400 D2549010513600 D2549010513800
D2549010514000 D2549010514200 D2549010514400 D2549010514600 D2549010514800
D2549010600000 D2549010600200 D2549010600400 D2549010600600 D2549010600800
D2549010601200 D2549010601400 D2549010601600 D2549010601800 D2549010602400
D2549010602600 D2549010602800 D2549010603000 D2549010603200 D2549010603400
D2549010603800 D2549010604000 D2549010604200 D2549010604400 D2549010604800
D2549010605000 D2549010605200 D2549010605800 D2549010606000 D2549010606200
D2549010606400 D2549010606600 D2549010606800 D2549010608200 D2549010608400
D2549020502200 D2549020506200 D2549020506400 D2549020506800 D2549020507000
D2549020507200 D2549020507600 D2549020507800 D2549020508000 D2549020508200
D2549020508400 D2549020508600 D2549020508800 D2549020509000 D2549020509200
D2549020509600 D2549020509800 D2549020510000 D2549020514200 D2549020514400
D2549020602200 D2549020604200 D2549020604400 D2549020604800 D2549020605000
D2549020605200 D2549020605600 D2549020605800 D2549020606000 D2549020606800
D2549020607000 D2549020607400 D2549020607600 D2549020607800 D2549020608200
D2549020608400 D2549020608600 D2549020608800 D2549020609000 D2549020609200
D2549020609400 D2549020609600 D2549020609800 D2549020610000 D2549020610200
D2549020610400 D2549020610600 D2549020611000 D2549020611200 D2549020611400
D2549020611600 D2549020611800 D2549020612000 D2549020612200 D2549020612400
D2549020612600 D2549020612800 D2549020613000 D2549020613200 D2549020613600
D2549020613800 D2549020614000 D2549020614400 D2549020614600 D2549020614800
D2549020700000 D2549020700200 D2549020700400 D2549020700600 D2549020700800
D2549020701000 D2549020701200 D2549020701400 D2549020701600 D2549020701800
D2549020702000 D2549020702400 D2549020702600 D2549020702800 D2549020703200
D2549020703400 D2549020703600 D2549020703800 D2549020704000 D2549020704200
D2549020704400 D2549020704600 D2549020704800 D2549020705200 D2549020705400
D2549020705600 D2549020706000 D2549020706200 D2549020706400 D2549020706600
D2549020706800 D2549020707000 D2549020707200 D2549020707400 D2549020707600
D2549020707800 D2549020708000 D2549020708200 D2549020708400 D2549020708600
D2549020708800 D2549020709000 D2549020709200 D2549020709400 D2549020709600
D2549020709800 D2549020710200 D2549020710400 D2549020710600 D2549020710800
D2549020711000 D2549020711200 D2549020711400 D2549020712200 D2549020713200
D2549020713400 D2549020713600 D2549020713800 D2549020714400 D2549020714600
D2549030503800 D2549030504000 D2549030504200 D2549030504600 D2549030504800
D2549030505200 D2549030505400 D2549030505600 D2549030505800 D2549030506000
D2549030506200 D2549030506400 D2549030506600 D2549030506800 D2549030507000
D2549030507600 D2549030507800 D2549030508000 D2549030508200 D2549030508400
D2549030508800 D2549030509000 D2549030509200 D2549030509400 D2549030509600
D2549030509800 D2549030510000 D2549030510400 D2549030510600 D2549030510800
D2549030511000 D2549030511200 D2549030511400 D2549030511800 D2549030512000
D2549030512400 D2549030512800 D2549030513000 D2549030513200 D2549030513400
D2549030513600 D2549030513800 D2549030514000 D2549030514200 D2549030514400
D2549030514600 D2549030514800 D2549030600200 D2549030600400 D2549030600600

D2549030601000 D2549030601200 D2549030601400 D2549030601800 D2549030602000 D2549030602200 D2549030602600 D2549030602800 D2549030603000 D2549030603400 D2549030603800 D2549030604200 D2549030604400 D2549030604800 D2549030605000 D2549030605200 D2549030605400 D2549030605600 D2549030605800 D2549030606000 D2549030606200 D2549030606600 D2549030606800 D2549030607000 D2549030607200 D2549030607400 D2549030607600 D2549030608200 D2549030608400 D2549030608600 D2549030608800 D2549030609200 D2549030614200 R225401107-004 R225401134-002 R225401134-004 R225401134-006 R225401134-008 R225401134-016 R225401134-018 R225401134-020 R225401134-022 R225401134-024 R225401136-000 R225401136-010 R225401136-016 R225401136-020 R225401136-022 R225401137-000 R225401137-002 R225401137-004 R225401137-006 R225401137-008 R225401137-010 R225401137-012 R225401137-014 R225401142-000 R225401142-002 R225401145-002 R225401145-004 R225401145-012 R225401152-000 R225401152-002 R225401152-004 R225401152-006 R225401153-000 R225401159-000 R225401160-000 R225401160-002 R225401172-002 R225401172-004 R225401172-006 R225401172-008 R225401172-010 R225401172-012 R225401172-014 R225401175-000 R225401175-002 R225401176-000 R225401183-008 R225401192-000 R225401196-000 R225401196-002 R225401196-034 R225401196-046 R225401196-048 R225401199-002 R225401600-000 R225401600-002 R225401603-000 R225401605-000 R225401611-008 R225401613-000 R225401618-000 R225401618-002 R225401619-000

92. Removal of the Toilet Unit and of the Toilet Shroud

A. General

A complete disassembly of the component is not necessary and not recommended.

Do not disassemble the component more than it is necessary for:

- Cleaning
- Visual Inspection
- Replacement of defective parts.

B. Job Set-up Information
(1) Consumable Materials

REFERENCE	DESIGNATION
08-018	Solvent-Based Synthetic Rubber Adhesive

Table 3413
Consumable Materials

08-025	Two Component Polyurethane Adhesive
08-026	Adhesive/Sealant one Part, RTV Silicone Rubber
	SICOMET 63 - Cyanacrylat Adhesive

Table 3413
Consumable Materials

C. Procedure

WARNING: **BE CAREFUL WHEN YOU USE SOLVENTS/CLEANING AGENTS, SEALANTS AND OTHER MATERIALS. OBEY THE MATERIAL MANUFACTURER'S INSTRUCTIONS AND THE LOCAL REGULATIONS. MAKE SURE THAT THERE IS A GOOD FLOW OF AIR THROUGH THE WORK AREA. DO NOT BREATHE THE FUMES. DO NOT SMOKE. DO NOT USE THESE MATERIALS NEAR A FLAME, SPARKS OR SOURCES OF HEAT. USE PROTECTIVE CLOTHING, GOGGLES AND GLOVES. IF YOU GET ONE OF THESE MATERIALS ON YOUR SKIN OR IN YOUR EYES, FLUSH IT AWAY WITH A FLOW OF CLEAN WATER. IF YOU GET ONE OF THESE MATERIALS IN YOUR MOUTH, GET IMMEDIATE MEDICAL AID. IN GENERAL, THESE MATERIALS ARE POISONOUS, FLAMMABLE AND SKIN IRRITANTS.**

CAUTION: **DO ALL THE WORK ON A CLEAN, SOFT SURFACE TO PREVENT DAMAGE TO THE COMPONENTS.**

SUB TASK 25-41-51-010-061-A01

D2549010509400 D2549010509600 D2549010509800 D2549010510000
D2549010510200 D2549010510400 D2549010510600 D2549010510800
D2549010511000 D2549010511400 D2549010511600 D2549010511800
D2549010512000 D2549010512200 D2549010512400 D2549010512600
D2549010513000 D2549010513400 D2549010513600 D2549010513800
D2549010514000 D2549010514200 D2549010514400 D2549010514600
D2549010514800 D2549010600000 D2549010600200 D2549010600400
D2549010600600 D2549010600800 D2549010601200 D2549010601400
D2549010601600 D2549010601800 D2549010602400 D2549010602600
D2549010602800 D2549010603000 D2549010603200 D2549010603400
D2549010603800 D2549010604000 D2549010604200 D2549010604400
D2549010604800 D2549010605000 D2549010605200 D2549010605800
D2549010606000 D2549010606200 D2549010606400 D2549010606600
D2549010606800 D2549010608200 D2549010608400 D2549020502200
D2549020506200 D2549020506400 D2549020506800 D2549020507000
D2549020507200 D2549020507600 D2549020507800 D2549020508000
D2549020508200 D2549020508400 D2549020508600 D2549020508800
D2549020509000 D2549020509200 D2549020509600 D2549020509800
D2549020510000 D2549020514200 D2549020514400 D2549020602200

D2549020604200 D2549020604800 D2549020605000 D2549020605200
D2549020605600 D2549020605800 D2549020606000 D2549020606800
D2549020607000 D2549020607400 D2549020607600 D2549020607800
D2549020608200 D2549020608400 D2549020608800 D2549020609000
D2549020609200 D2549020609400 D2549020609600 D2549020609800
D2549020610000 D2549020610200 D2549020610400 D2549020610600
D2549020611000 D2549020611200 D2549020611400 D2549020611600
D2549020611800 D2549020612000 D2549020612200 D2549020612400
D2549020612600 D2549020612800 D2549020613000 D2549020613200
D2549020613600 D2549020613800 D2549020614000 D2549020614400
D2549020614800 D2549020700000 D2549020700200 D2549020700400
D2549020700600 D2549020700800 D2549020701000 D2549020701200
D2549020701400 D2549020701600 D2549020701800 D2549020702000
D2549020702400 D2549020702600 D2549020702800 D2549020703200
D2549020703400 D2549020703600 D2549020703800 D2549020704000
D2549020704200 D2549020704400 D2549020704600 D2549020704800
D2549020705200 D2549020705400 D2549020705600 D2549020706000
D2549020706200 D2549020706400 D2549020706600 D2549020706800
D2549020707200 D2549020707400 D2549020707600 D2549020707800
D2549020708000 D2549020708200 D2549020708400 D2549020708600
D2549020708800 D2549020709000 D2549020709200 D2549020709400
D2549020709600 D2549020709800 D2549020710200 D2549020710400
D2549020710600 D2549020710800 D2549020711000 D2549020711200
D2549020711400 D2549020712200 D2549020713200 D2549020713400
D2549020713600 D2549020713800 D2549020714400 D2549020714600
D2549030503800 D2549030504000 D2549030504200 D2549030504600
D2549030504800 D2549030505200 D2549030505400 D2549030505600
D2549030505800 D2549030506000 D2549030506200 D2549030506400
D2549030506600 D2549030506800 D2549030507000 D2549030507600
D2549030507800 D2549030508000 D2549030508200 D2549030508400
D2549030508800 D2549030509000 D2549030509200 D2549030509400
D2549030509600 D2549030509800 D2549030510000 D2549030510400
D2549030510600 D2549030510800 D2549030511000 D2549030511200
D2549030511400 D2549030511800 D2549030512000 D2549030512400
D2549030512800 D2549030513000 D2549030513200 D2549030513400
D2549030513600 D2549030513800 D2549030514000 D2549030514200
D2549030514400 D2549030514600 D2549030514800 D2549030600200
D2549030600400 D2549030600600 D2549030601000 D2549030601200
D2549030601400 D2549030601800 D2549030602000 D2549030602200
D2549030602600 D2549030602800 D2549030603000 D2549030603400
D2549030603800 D2549030604200 D2549030604400 D2549030604800
D2549030605000 D2549030605200 D2549030605400 D2549030605600
D2549030605800 D2549030606000 D2549030606200 D2549030606600
D2549030606800 D2549030607000 D2549030607200 D2549030607400
D2549030607600 D2549030608200 D2549030608400 D2549030608600
D2549030608800 D2549030609200 D2549030614200 R225401107-004 R225401134-
002 R225401134-004 R225401134-006 R225401134-008 R225401134-016 R225401134-

018 R225401134-020 R225401134-022 R225401134-024 R225401136-000 R225401136-010 R225401136-016 R225401136-020 R225401136-022 R225401137-000 R225401137-002 R225401137-004 R225401137-006 R225401137-008 R225401137-010 R225401137-012 R225401137-014 R225401142-000 R225401142-002 R225401145-002 R225401145-004 R225401145-012 R225401152-000 R225401152-002 R225401152-004 R225401152-006 R225401153-000 R225401159-000 R225401160-000 R225401160-002 R225401172-002 R225401172-004 R225401172-006 R225401172-008 R225401172-010 R225401172-012 R225401172-014 R225401175-000 R225401175-002 R225401176-000 R225401183-008 R225401192-000 R225401196-000 R225401196-002 R225401196-034 R225401196-046 R225401196-048 R225401199-002 R225401600-000 R225401600-002 R225401603-000 R225401605-000 R225401611-008 R225401613-000 R225401618-000 R225401618-002 R225401619-000

1. Removal of the Toilet Unit and of the Toilet Shroud (12C-1)

NOTE: **See TABLE 3414 for the references for the replacement procedures of permanent installed parts.**

More data for bonded parts are given in column SEE REPAIR TASK. Use the data for the selection of the related repair solution.

IPL FIG. ITEM	COMPONENT PART NAME	IPL FIG. ITEM	REPLACEMENT PART NAME	SEE REPAIR TASK
12C-001 12C-010 12C-011	Toilet Unit and Toilet Shroud Toilet Shroud Assembly Colourless Toilet Shroud	12C-012 12C-013	Colourless Toilet Shroud Colourless Ring Cover	Replacement of the Bonded Parts Material No. 08-018 Solvent-Based Synthetic Rubber Adhesive
12C-001 12C-010	Toilet Unit and Toilet Shroud Toilet Shroud Assembly	12C-011 12C-020	Colourless Toilet Shroud Spacer	Replacement of the Bonded Parts Material No. 08-025 Two Component Polyurethane Adhesive

Table 3414
Reference list for the replacement of permanent installed parts

12C-001 12C-010	Toilet Unit and Toilet Shroud Toilet Shroud Assembly	12C-030	Hose Section	Replacement of the Bonded Parts Material No. 08-026 Adhesive/Sealant one Part, RTV Silicone Rubber
12C-001 12C-060 12C-100	Toilet Unit and Toilet Shroud Toilet Seat Assembly Unpainted Toilet Cover	12C-110	Unpainted Buffer	Replacement of the Bonded Parts Material No. 08-738 SICOMET 63 - Cyanacrylat Adhesive
12C-001 12C-060 12C-120	Toilet Unit and Toilet Shroud Toilet Seat Assembly Unpainted Toilet Seat	12C-130	Unpainted Buffer	Replacement of the Bonded Parts Material No. 08-738 SICOMET 63 - Cyanacrylat Adhesive
12C-001 12C-060 12C-120	Toilet Unit and Toilet Shroud Toilet Seat Assembly Unpainted Toilet Seat	12C-140	Buffer	Replacement of the Bonded Parts Material No. 08-738 SICOMET 63 - Cyanacrylat Adhesive

Table 3414
Reference list for the replacement of permanent installed parts

(b) Remove the screws 12C-040, the nuts 12C-050 and the toilet shroud assembly 12C-010 from the lavatory structure.

(c) Remove the nuts 12C-070, the gaskets 12C-080 and the toilet seat assembly 12C-060 from the toilet shroud assembly 12C-010.

(d) Disassemble the toilet seat assembly 12C-060 as follows:

1 Remove the unpainted fasteners 12C-090 and the unpainted toilet cover 12C-100 from the unpainted toilet seat 12C-120.

(e) Remove the screws 12C-170, the washers 12C-180 and the support bracket 12C-150 from the lavatory structure.

(f) Remove the screws 12C-175, the washers 12C-180, the nuts 12C-190 and the support bracket 12C-160 from the lavatory structure.

(g) Remove the ground cable from the toilet assembly 12C-230.

NOTE: For further instructions, see CMMV 38-34-20_29780 (toilet assembly).

(h) Remove the bolts 12C-200, the lock washers 12C-210, the washers 12C-220 and the toilet assembly 12C-230 from the lavatory structure.

SUB TASK 25-41-51-010-061-B01
D2549020604400 D2549020608600 D2549020614600 D2549020707000

2. Removal of the Toilet Unit and of the Toilet Shroud (12C-1)

NOTE: See TABLE 3415 for the references for the replacement procedures of permanent installed parts.

More data for bonded parts are given in column SEE REPAIR TASK. Use the data for the selection of the related repair solution.

IPL FIG. ITEM	COMPONENT PART NAME	IPL FIG. ITEM	REPLACEMENT PART NAME	SEE REPAIR TASK
12C-001 12C-010 12C-011	Toilet Unit and Toilet Shroud Toilet Shroud Assembly Colourless Toilet Shroud	12C-012 12C-013	Colourless Toilet Shroud Colourless Ring Cover	Replacement of the Bonded Parts Material No. 08-018 Solvent-Based Synthetic Rubber Adhesive

Table 3415
Reference list for the replacement of permanent installed parts

12C-001 12C-010	Toilet Unit and Toilet Shroud Toilet Shroud Assembly	12C-011 12C-020	Colourless Toilet Shroud Spacer	Replace-ment of the Bonded Parts Material No. 08-025 Two Component Polyure-thane Adhesive
12C-001 12C-010	Toilet Unit and Toilet Shroud Toilet Shroud Assembly	12C-030	Hose Section	Replace-ment of the Bonded Parts Material No. 08-026 Ad-hesive/Sea-lant one Part, RTV Silicone Rubber
12C-001 12C-060 12C-100	Toilet Unit and Toilet Shroud Toilet Seat Assembly Unpainted Toilet Cover	12C-110	Unpainted Buffer	Replace-ment of the Bonded Parts Material No. 08-738 SI-COMET 63 - Cyanacrylat Adhesive

Table 3415
Reference list for the replacement of permanent installed parts

12C-001 12C-060 12C-120	Toilet Unit and Toilet Shroud Toilet Seat Assembly Unpainted Toilet Seat	12C-130	Unpainted Buffer	Replace-ment of the Bonded Parts Material No. 08-738 SI-COMET 63 - Cyanacrylat Adhesive
12C-001 12C-060 12C-120	Toilet Unit and Toilet Shroud Toilet Seat Assembly Unpainted Toilet Seat	12C-140	Buffer	Replace-ment of the Bonded Parts Material No. 08-738 SI-COMET 63 - Cyanacrylat Adhesive

Table 3415
Reference list for the replacement of permanent installed parts

(b) Remove the screws 12C-040, the nuts 12C-050 and the toilet shroud assembly 12C-010 from the lavatory structure.

(c) Remove the nuts 12C-070, the gaskets 12C-080 and the toilet seat assembly 12C-060 from the toilet shroud assembly 12C-010.

(d) Disassemble the toilet seat assembly 12C-060 as follows:

1 Remove the unpainted fasteners 12C-090 and the unpainted toilet cover 12C-100 from the unpainted toilet seat 12C-120.

(e) Remove the screws 12C-170, the washers 12C-180 and the support bracket 12C-150 from the lavatory structure.

(f) Remove the screws 12C-175, the washers 12C-180, the nuts 12C-190 and the support bracket 12C-160 from the lavatory structure.

(g) Remove the ground cable from the toilet assembly 12C-230.

NOTE: For further instructions, see CMMV 38-34-16_29780 (toilet assembly).

NOTE: For further instructions, see CMMV 38-34-20_29780 (toilet assembly).

(h) Remove the bolts 12C-200, the lock washers 12C-210, the washers 12C-220 and the toilet assembly 12C-230 from the lavatory structure.

TASK 25-41-51-000-809-E01

D2549010400000 D2549010400200 D2549010400400 D2549010400600 D2549010402600
D2549010403000 D2549010509000 D2549010513200 D2549010601000 D2549010602000
D2549010602200 D2549010604600 D2549010605600 D2549010607000 D2549010607200
D2549010608600 D2549010608800 D2549010609200 D2549010609600 D2549010610000
D2549010610200 D2549010610800 D2549010611000 D2549010611400 D2549010612200
D2549010612400 D2549010612600 D2549010613000 D2549010613200 D2549010613400
D2549010614200 D2549010614400 D2549010614600 D2549010614800 D2549020400000
D2549020400200 D2549020404200 D2549020404400 D2549020405600 D2549020405800
D2549020505600 D2549020506600 D2549020507400 D2549020510400 D2549020511200
D2549020512000 D2549020512200 D2549020513000 D2549020513200 D2549020513400
D2549020513800 D2549020514000 D2549020604600 D2549020605400 D2549020610800
D2549020702200 D2549020705000 D2549020705800 D2549020710000 D2549020712400
D2549020712800 D2549020713000 D2549020714000 D2549020800000 D2549020800600
D2549020800800 D2549020801200 D2549020801400 D2549020801600 D2549020801800
D2549020802200 D2549020802800 D2549020803600 D2549020803800 D2549020804000
D2549020804200 D2549020804800 D2549020805400 D2549020805800 D2549020806000
D2549020806200 D2549020806800 D2549020807000 D2549020808600 D2549020808800
D2549020810000 D2549020810200 D2549020810600 D2549020810800 D2549020811200
D2549020811400 D2549020811600 D2549020812200 D2549020812400 D2549020812600
D2549020812800 D2549020813000 D2549020813400 D2549020814000 D2549020814400
D2549020814800 D2549030400000 D2549030400200 D2549030400400 D2549030400600
D2549030401000 D2549030401200 D2549030401400 D2549030401600 D2549030401800
D2549030402600 D2549030402800 D2549030403000 D2549030403800 D2549030404000
D2549030404200 D2549030405000 D2549030405600 D2549030405800 D2549030406000
D2549030406600 D2549030406800 D2549030407000 D2549030407800 D2549030408000
D2549030408400 D2549030409800 D2549030410400 D2549030507200 D2549030507400
D2549030508600 D2549030510200 D2549030511600 D2549030512200 D2549030600000
D2549030600800 D2549030601600 D2549030602400 D2549030603200 D2549030604600
D2549030606400 D2549030607800 D2549030608000 D2549030609000 D2549030609800
D2549030610000 D2549030610200 D2549030610400 D2549030611000 D2549030611400
D2549030611600 D2549030612000 D2549030612400 D2549030613600 D2549030613800
D2549030614000 D2549030614400 D2549030614800 D2549040500600 R225401115-000
R225401136-004 R225401136-018 R225401137-016 R225401145-006 R225401145-008
R225401145-010 R225401145-014 R225401152-008 R225401168-000 R225401168-004
R225401168-006 R225401168-014 R225401168-016 R225401168-020 R225401168-028
R225401172-000 R225401172-016 R225401172-018 R225401195-000 R225401196-004
R225401196-006 R225401196-008 R225401196-010 R225401196-036 R225401196-038
R225401196-040 R225401196-044 R225401196-050 R225401196-052 R225401196-054
R225401196-056 R225401199-000 R225401199-004 R225401199-008 R225401600-004
R225401609-000 R225401611-006 R225401611-010 R225401614-000 R225401622-000
R225401622-002 R225401625-000 R225401646-000 R225401647-000 R225401656-000
R225401656-002 R225401658-000 R225401662-000 R225401662-002 R225401673-000

93. Removal of the Toilet Unit and of the Toilet Shroud

A. General

A complete disassembly of the component is not necessary and not recommended.

Do not disassemble the component more than it is necessary for:

- Cleaning
- Visual Inspection
- Replacement of defective parts.

B. Job Set-up Information
(1) Consumable Materials

REFERENCE	DESIGNATION
08-018	Solvent-Based Synthetic Rubber Adhesive
08-025	Two Component Polyurethane Adhesive
08-026	Adhesive/Sealant one Part, RTV Silicone Rubber
	SICOMET 63 - Cyanacrylat Adhesive

Table 3416
Consumable Materials

C. Procedure

WARNING: **BE CAREFUL WHEN YOU USE SOLVENTS/CLEANING AGENTS, SEALANTS AND OTHER MATERIALS. OBEY THE MATERIAL MANUFACTURER'S INSTRUCTIONS AND THE LOCAL REGULATIONS. MAKE SURE THAT THERE IS A GOOD FLOW OF AIR THROUGH THE WORK AREA. DO NOT BREATHE THE FUMES. DO NOT SMOKE. DO NOT USE THESE MATERIALS NEAR A FLAME, SPARKS OR SOURCES OF HEAT. USE PROTECTIVE CLOTHING, GOGGLES AND GLOVES. IF YOU GET ONE OF THESE MATERIALS ON YOUR SKIN OR IN YOUR EYES, FLUSH IT AWAY WITH A FLOW OF CLEAN WATER. IF YOU GET ONE OF THESE MATERIALS IN YOUR MOUTH, GET IMMEDIATE MEDICAL AID. IN GENERAL, THESE MATERIALS ARE POISONOUS, FLAMMABLE AND SKIN IRRITANTS.**

CAUTION: **DO ALL THE WORK ON A CLEAN, SOFT SURFACE TO PREVENT DAMAGE TO THE COMPONENTS.**

SUB TASK 25-41-51-010-101-A01

D2549010400000 D2549010400400 D2549010402600 D2549010403000
D2549010602000 D2549010602200 D2549010604600 D2549010605600
D2549010607000 D2549010607200 D2549010608600 D2549010608800
D2549010609200 D2549010609600 D2549010610000 D2549010610200
D2549010610800 D2549010611000 D2549010611400 D2549010612200
D2549010612400 D2549010613000 D2549010613200 D2549010614200
D2549010614400 D2549010614600 D2549010614800 D2549020400000
D2549020400200 D2549020404200 D2549020404400 D2549020405600
D2549020405800 D2549020505600 D2549020507400 D2549020510400
D2549020511200 D2549020512000 D2549020512200 D2549020513000
D2549020513200 D2549020513400 D2549020513800 D2549020514000
D2549020604600 D2549020605400 D2549020610800 D2549020702200
D2549020705000 D2549020705800 D2549020710000 D2549020712400
D2549020712800 D2549020713000 D2549020714000 D2549020800000
D2549020800600 D2549020800800 D2549020801200 D2549020801400
D2549020801600 D2549020801800 D2549020802200 D2549020802800
D2549020803600 D2549020803800 D2549020804000 D2549020804200
D2549020804800 D2549020805400 D2549020805800 D2549020806000
D2549020806200 D2549020806800 D2549020807000 D2549020808600
D2549020808800 D2549020810000 D2549020810200 D2549020810600
D2549020810800 D2549020811200 D2549020811400 D2549020812200
D2549020812400 D2549020812600 D2549020812800 D2549020813000
D2549020813400 D2549020814000 D2549020814400 D2549020814800
D2549030400000 D2549030400200 D2549030400400 D2549030400600
D2549030401000 D2549030401200 D2549030401400 D2549030401600
D2549030401800 D2549030402600 D2549030402800 D2549030403000
D2549030403800 D2549030404000 D2549030404200 D2549030405000
D2549030405600 D2549030405800 D2549030406000 D2549030406600
D2549030406800 D2549030407000 D2549030407800 D2549030408000
D2549030408400 D2549030409800 D2549030410400 D2549030507200
D2549030507400 D2549030508600 D2549030510200 D2549030511600
D2549030512200 D2549030600000 D2549030600800 D2549030601600
D2549030602400 D2549030603200 D2549030604600 D2549030606400
D2549030607800 D2549030608000 D2549030609000 D2549030609800
D2549030610000 D2549030610400 D2549030611000 D2549030611400
D2549030611600 D2549030612000 D2549030612400 D2549030613600
D2549030613800 D2549030614000 D2549030614400 D2549030614800
D2549040500600 R225401115-000 R225401136-004 R225401136-018 R225401137-016
R225401145-006 R225401145-008 R225401145-010 R225401145-014 R225401152-008
R225401168-000 R225401168-004 R225401168-006 R225401168-014 R225401168-016
R225401168-020 R225401168-028 R225401172-000 R225401172-016 R225401172-018
R225401195-000 R225401196-004 R225401196-006 R225401196-008 R225401196-010
R225401196-036 R225401196-038 R225401196-040 R225401196-044 R225401196-050
R225401196-052 R225401196-054 R225401196-056 R225401199-000 R225401199-004
R225401199-008 R225401600-004 R225401609-000 R225401611-006 R225401611-010
R225401614-000 R225401622-000 R225401622-002 R225401625-000 R225401646-

000 R225401647-000 R225401656-000 R225401656-002 R225401658-000 R225401662-000 R225401662-002 R225401673-000

1. Removal of the Toilet Unit and of the Toilet Shroud (12D-1)

NOTE: **See TABLE 3417 for the references for the replacement procedures of permanent installed parts.**

More data for bonded parts are given in column SEE REPAIR TASK. Use the data for the selection of the related repair solution.

IPL FIG. ITEM	COMPONENT PART NAME	IPL FIG. ITEM	REPLACEMENT PART NAME	SEE REPAIR TASK
12D-001 12D-010 12D-011	Toilet Unit and Toilet Shroud Toilet Shroud Assembly Colourless Toilet Shroud	12D-012 12D-013	Colourless Toilet Shroud Colourless Ring Cover	Replacement of the Bonded Parts Material No. 08-018 Solvent-Based Synthetic Rubber Adhesive
12D-001 12D-010	Toilet Unit and Toilet Shroud Toilet Shroud Assembly	12D-011 12D-020	Colourless Toilet Shroud Spacer	Replacement of the Bonded Parts Material No. 08-025 Two Component Polyurethane Adhesive
12D-001 12D-010	Toilet Unit and Toilet Shroud Toilet Shroud Assembly	12D-030	Hose Section	Replacement of the Bonded Parts

Table 3417
Reference list for the replacement of permanent installed parts

				Material No. 08-026 Adhesive/ Sealant one Part, RTV Silicone Rubber
12D-001 12D-060 12D-100	Toilet Unit and Toilet Shroud Toilet Seat Assembly Unpainted Toilet Cover	12D-110	Unpainted Buffer	Replace-ment of the Bonded Parts Material No. 08-738 SICOMET 63 - Cyana-crylat Adhesive
12D-001 12D-060 12D-120	Toilet Unit and Toilet Shroud Toilet Seat Assembly Unpainted Toilet Seat	12D-130	Unpainted Buffer	Replace-ment of the Bonded Parts Material No. 08-738 SICOMET 63 - Cyana-crylat Adhesive
12D-001 12D-060 12D-120	Toilet Unit and Toilet Shroud Toilet Seat Assembly Unpainted Toilet Seat	12D-140	Buffer	Replace-ment of the Bonded Parts Material No. 08-738 SICOMET 63 - Cyana-crylat Adhesive

Table 3417
Reference list for the replacement of permanent installed parts

12D-001 12D-150	Toilet Unit and Toilet Shroud Support Bracket	12D-155	Section	Replace-ment of the Bonded Parts Material No. 08-026 Adhesive/ Sealant one Part, RTV Silicone Rubber
12D-001 12D-160	Toilet Unit and Toilet Shroud Support Bracket	12D-165	Section	Replace-ment of the Bonded Parts Material No. 08-026 Adhesive/ Sealant one Part, RTV Silicone Rubber

Table 3417
Reference list for the replacement of permanent installed parts

(b) Remove the screws 12D-040, the nuts 12D-050 and the toilet shroud assembly 12D-010 from the lavatory structure.

(c) Remove the nuts 12D-070, the gaskets 12D-080 and the toilet seat assembly 12D-060 from the toilet shroud assembly 12D-010.

(d) Disassemble the toilet seat assembly 12D-060 as follows:

1 Remove the unpainted fasteners 12D-090 and the unpainted toilet cover 12D-100 from the unpainted toilet seat 12D-120.

(e) Remove the screws 12D-170, the washers 12D-180 and the support bracket 12D-150 from the lavatory structure.

(f) Remove the screws 12D-175, the washers 12D-180, 12D-185, the nuts 12D-190 and the support bracket 12D-160 from the lavatory structure.

(g) Remove the ground cable from the toilet assembly 12D-230.

NOTE: For further instructions, see CMMV 38-34-20_29780 (toilet assembly).

NOTE: For further instructions, see CMMV 38-34-30_29780 (toilet assembly).

(h) Remove the bolts 12D-200, the lock washers 12D-210, the washers 12D-220 and the toilet assembly 12D-230 from the lavatory structure.

SUB TASK 25-41-51-010-101-B01
D2549010509000 D2549010513200 D2549010601000 D2549020506600

2. Removal of the Toilet Unit and of the Toilet Shroud (12D-1)

NOTE: See TABLE 3418 for the references for the replacement procedures of permanent installed parts.

More data for bonded parts are given in column SEE REPAIR TASK. Use the data for the selection of the related repair solution.

IPL FIG. ITEM	COMPONENT PART NAME	IPL FIG. ITEM	REPLACEMENT PART NAME	SEE REPAIR TASK
12D-001 12D-010 12D-011	Toilet Unit and Toilet Shroud Toilet Shroud Assembly Colourless Toilet Shroud	12D-012 12D-013	Colourless Toilet Shroud Colourless Ring Cover	Replacement of the Bonded Parts Material No. 08-018 Solvent-Based Synthetic Rubber Adhesive
12D-001 12D-010	Toilet Unit and Toilet Shroud Toilet Shroud Assembly	12D-011 12D-020	Colourless Toilet Shroud Spacer	Replacement of the Bonded Parts Material No. 08-025 Two

Table 3418
Reference list for the replacement of permanent installed parts

				Component Polyure-thane Adhesive
12D-001 12D-010	Toilet Unit and Toilet Shroud Toilet Shroud Assembly	12D-030	Hose Section	Replace-ment of the Bonded Parts Material No. 08-026 Adhesive/ Sealant one Part, RTV Silicone Rubber
12D-001 12D-060 12D-100	Toilet Unit and Toilet Shroud Toilet Seat Assembly Unpainted Toilet Cover	12D-110	Unpainted Buffer	Replace-ment of the Bonded Parts Material No. 08-738 SICOMET 63 - Cyana-crylat Adhesive
12D-001 12D-060 12D-120	Toilet Unit and Toilet Shroud Toilet Seat Assembly Unpainted Toilet Seat	12D-130	Unpainted Buffer	Replace-ment of the Bonded Parts Material No. 08-738 SICOMET 63 - Cyana-crylat Adhesive
12D-001 12D-060 12D-120	Toilet Unit and Toilet Shroud Toilet Seat Assembly	12D-140	Buffer	Replace-ment of the

Table 3418
Reference list for the replacement of permanent installed parts

	Unpainted Toilet Seat			Bonded Parts Material No. 08-738 SICOMET 63 - Cyana-crylat Adhesive
12D-001 12D-150	Toilet Unit and Toilet Shroud Support Bracket	12D-155	Section	Replace-ment of the Bonded Parts Material No. 08-026 Adhesive/ Sealant one Part, RTV Silicone Rubber
12D-001 12D-160	Toilet Unit and Toilet Shroud Support Bracket	12D-165	Section	Replace-ment of the Bonded Parts Material No. 08-026 Adhesive/ Sealant one Part, RTV Silicone Rubber

Table 3418
Reference list for the replacement of permanent installed parts

(b) Remove the screws 12D-040, the nuts 12D-050 and the toilet shroud assembly 12D-010 from the lavatory structure.

(c) Remove the nuts 12D-070, the gaskets 12D-080 and the toilet seat assembly 12D-060 from the toilet shroud assembly 12D-010.

(d) Disassemble the toilet seat assembly 12D-060 as follows:

1 Remove the unpainted fasteners 12D-090 and the unpainted toilet cover 12D-100 from the unpainted toilet seat 12D-120.

(e) Remove the screws 12D-170, the washers 12D-180 and the support bracket 12D-150 from the lavatory structure.

(f) Remove the screws 12D-175, the washers 12D-180, the nuts 12D-190 and the support bracket 12D-160 from the lavatory structure.

(g) Remove the ground cable from the toilet assembly 12D-230.

NOTE: For further instructions, see CMMV 38-34-16_29780 (toilet assembly).

NOTE: For further instructions, see CMMV 38-34-20_29780 (toilet assembly).

(h) Remove the bolts 12D-200, the lock washers 12D-210, the washers 12D-220 and the toilet assembly 12D-230 from the lavatory structure.

SUB TASK 25-41-51-010-101-C01
D2549010400200 D2549010400600 D2549010612600 D2549010613400 D2549020811600

3. Removal of the Toilet Unit and of the Toilet Shroud (12D-1)

NOTE: See TABLE 3419 for the references for the replacement procedures of permanent installed parts.

More data for bonded parts are given in column SEE REPAIR TASK. Use the data for the selection of the related repair solution.

IPL FIG. ITEM	COMPONENT PART NAME	IPL FIG. ITEM	REPLACEMENT PART NAME	SEE REPAIR TASK
12D-001 12D-010 12D-011	Toilet Unit and Toilet Shroud Toilet Shroud Assembly Colourless Toilet Shroud	12D-012 12D-013	Colourless Toilet Shroud Colourless Ring Cover	Replacement of the Bonded Parts Material No. 08-018 Solvent-Based Synthetic Rubber Adhesive

Table 3419
Reference list for the replacement of permanent installed parts

12D-001 12D-010	Toilet Unit and Toilet Shroud Toilet Shroud Assembly	12D-011 12D-020	Colourless Toilet Shroud Spacer	Replace-ment of the Bonded Parts Material No. 08-025 Two Com-ponent Polyure-thane Adhesive
12D-001 12D-010	Toilet Unit and Toilet Shroud Toilet Shroud Assembly	12D-030	Hose Section	Replace-ment of the Bonded Parts Material No. 08-026 Adhesive/ Sealant one Part, RTV Silicone Rubber
12D-001 12D-060 12D-100	Toilet Unit and Toilet Shroud Toilet Seat Assembly Unpainted Toilet Cover	12D-110	Unpainted Buffer	Replace-ment of the Bonded Parts Material No. 08-738 SICOMET 63 - Cyana-crylat Adhesive
12D-001 12D-060 12D-120	Toilet Unit and Toilet Shroud Toilet Seat Assembly Unpainted Toilet Seat	12D-130	Unpainted Buffer	Replace-ment of the Bonded Parts Material No. 08-738 SICOMET

Table 3419
Reference list for the replacement of permanent installed parts

				63 - Cyana-crylat Adhesive
12D-001 12D-060 12D-120	Toilet Unit and Toilet Shroud Toilet Seat Assembly Unpainted Toilet Seat	12D-140	Buffer	Replace-ment of the Bonded Parts Material No. 08-738 SICOMET 63 - Cyana-crylat Adhesive
12D-001 12D-150	Toilet Unit and Toilet Shroud Support Bracket	12D-155	Section	Replace-ment of the Bonded Parts Material No. 08-026 Adhesive/ Sealant one Part, RTV Silicone Rubber
12D-001 12D-160	Toilet Unit and Toilet Shroud Support Bracket	12D-165	Section	Replace-ment of the Bonded Parts Material No. 08-026 Adhesive/ Sealant one Part, RTV Silicone Rubber

Table 3419
Reference list for the replacement of permanent installed parts

(b) Remove the screws 12D-040, the nuts 12D-050 and the toilet shroud assembly 12D-010 from the lavatory structure.

(c) Remove the nuts 12D-070, the gaskets 12D-080 and the toilet seat assembly 12D-060 from the toilet shroud assembly 12D-010.

(d) Disassemble the toilet seat assembly 12D-060 as follows:

1 Remove the unpainted fasteners 12D-090 and the unpainted toilet cover 12D-100 from the unpainted toilet seat 12D-120.

(e) Remove the screws 12D-170, the washers 12D-180 and the support bracket 12D-150 from the lavatory structure.

(f) Remove the screws 12D-175, the washers 12D-180, the nuts 12D-190 and the support bracket 12D-160 from the lavatory structure.

(g) Remove the ground cable from the toilet assembly 12D-230.

NOTE: For further instructions, see CMMV 38-34-20_29780 (toilet assembly).

(h) Remove the bolts 12D-200, the lock washers 12D-210, the washers 12D-220 and the toilet assembly 12D-230 from the lavatory structure.

SUB TASK 25-41-51-010-101-D01
D2549030610200

4. Removal of the Toilet Unit and of the Toilet Shroud (12D-1)

NOTE: See TABLE 3420 for the references for the replacement procedures of permanent installed parts.

More data for bonded parts are given in column SEE REPAIR TASK. Use the data for the selection of the related repair solution.

IPL FIG. ITEM	COMPONENT PART NAME	IPL FIG. ITEM	REPLACEMENT PART NAME	SEE REPAIR TASK
12D-001 12D-010 12D-011	Toilet Unit and Toilet Shroud Toilet Shroud Assembly Colourless Toilet Shroud	12D-012 12D-013	Colourless Toilet Shroud Colourless Ring Cover	Replacement of the Bonded Parts Material No. 08-018 Solvent-

Table 3420
Reference list for the replacement of permanent installed parts

				Based Synthetic Rubber Adhesive
12D-001 12D-010	Toilet Unit and Toilet Shroud Toilet Shroud Assembly	12D-011 12D-020	Colourless Toilet Shroud Spacer	Replacement of the Bonded Parts Material No. 08-025 Two Component Polyurethane Adhesive
12D-001 12D-010	Toilet Unit and Toilet Shroud Toilet Shroud Assembly	12D-030	Hose Section	Replacement of the Bonded Parts Material No. 08-026 Adhesive/ Sealant one Part, RTV Silicone Rubber
12D-001 12D-060 12D-100	Toilet Unit and Toilet Shroud Toilet Seat Assembly Unpainted Toilet Cover	12D-110	Unpainted Buffer	Replacement of the Bonded Parts Material No. 08-738 SICOMET 63 - Cyanacrylat Adhesive
12D-001 12D-060	Toilet Unit and Toilet Shroud	12D-130	Unpainted Buffer	Replacement of the

Table 3420
Reference list for the replacement of permanent installed parts

12D-120	Toilet Seat Assembly Unpainted Toilet Seat			Bonded Parts Material No. 08-738 SICOMET 63 - Cyana-crylat Adhesive
12D-001 12D-060 12D-120	Toilet Unit and Toilet Shroud Toilet Seat Assembly Unpainted Toilet Seat	12D-140	Buffer	Replace-ment of the Bonded Parts Material No. 08-738 SICOMET 63 - Cyana-crylat Adhesive
12D-001 12D-150	Toilet Unit and Toilet Shroud Support Bracket	12D-155	Section	Replace-ment of the Bonded Parts Material No. 08-026 Adhesive/ Sealant one Part, RTV Silicone Rubber
12D-001 12D-160	Toilet Unit and Toilet Shroud Support Bracket	12D-165	Section	Replace-ment of the Bonded Parts Material No. 08-026 Adhesive/ Sealant one Part, RTV Silicone Rubber

Table 3420
Reference list for the replacement of permanent installed parts

(b) Remove the screws 12D-040, the nuts 12D-050 and the toilet shroud assembly 12D-010 from the lavatory structure.

(c) Remove the nuts 12D-070, the gaskets 12D-080 and the toilet seat assembly 12D-060 from the toilet shroud assembly 12D-010.

(d) Disassemble the toilet seat assembly 12D-060 as follows:

1 Remove the unpainted fasteners 12D-090 and the unpainted toilet cover 12D-100 from the unpainted toilet seat 12D-120.

(e) Remove the screws 12D-170, the washers 12D-180 and the support bracket 12D-150 from the lavatory structure.

(f) Remove the screws 12D-175, the washers 12D-180, 12D-185, the nuts 12D-190 and the support bracket 12D-160 from the lavatory structure.

(g) Remove the ground cable from the toilet assembly 12D-230.

NOTE: For further instructions, see CMMV 38-34-20_29780 (toilet assembly).

NOTE: For further instructions, see CMMV 38-34-30_29780 (toilet assembly).

(h) Remove the bolts 12D-200, the lock washers 12D-210, the washers 12D-220 and the toilet assembly 12D-230 from the lavatory structure.

TASK 25-41-51-000-809-F01

D2549010400800 D2549010402000 D2549010402800 D2549010603600 D2549010607400
D2549010607600 D2549010607800 D2549010609000 D2549010609400 D2549010609800
D2549010610400 D2549010611200 D2549010611600 D2549010611800 D2549010612000
D2549010613800 D2549020400400 D2549020403800 D2549020404600 D2549020404800
D2549020405000 D2549020405200 D2549020405400 D2549020510600 D2549020510800
D2549020511000 D2549020511600 D2549020511800 D2549020512400 D2549020512600
D2549020512800 D2549020513600 D2549020514600 D2549020514800 D2549020711600
D2549020800200 D2549020800400 D2549020801000 D2549020802000 D2549020802400
D2549020802600 D2549020803000 D2549020803200 D2549020803400 D2549020805000
D2549020805200 D2549020805600 D2549020806400 D2549020806600 D2549020807400
D2549020807600 D2549020807800 D2549020808200 D2549020808400 D2549020809000
D2549020809400 D2549020809800 D2549020810400 D2549020812000 D2549020813600
D2549020814200 D2549020814600 D2549030402000 D2549030402200 D2549030402400
D2549030403400 D2549030403600 D2549030404400 D2549030404600 D2549030405200
D2549030405400 D2549030407200 D2549030408200 D2549030408600 D2549030610600
D2549030611200 D2549030611800 D2549030612200 D2549030612600 D2549030612800
D2549030613200 D2549030613400 D2549030614600 R225401134-010 R225401134-012
R225401134-026 R225401134-028 R225401134-030 R225401134-032 R225401134-034
R225401134-036 R225401168-002 R225401168-008 R225401168-010 R225401168-012
R225401168-022 R225401168-024 R225401168-026 R225401183-000 R225401183-002
R225401192-002 R225401199-006 R225401605-002 R225401619-002 R225401629-000
R225401629-002 R225401639-000 R225401639-002 R225401643-000 R225401643-002
R225401643-004 R225401693-000

94. Removal of the Toilet Unit and of the Toilet Shroud

A. General

A complete disassembly of the component is not necessary and not recommended.

Do not disassemble the component more than it is necessary for:

- Cleaning
- Visual Inspection
- Replacement of defective parts.

B. Job Set-up Information
(1) Consumable Materials

REFERENCE	DESIGNATION
08-018	Solvent-Based Synthetic Rubber Adhesive
08-025	Two Component Polyurethane Adhesive
08-026	Adhesive/Sealant one Part, RTV Silicone Rubber
	SICOMET 63 - Cyanacrylat Adhesive

Table 3421
Consumable Materials

C. Procedure

WARNING: **BE CAREFUL WHEN YOU USE SOLVENTS/CLEANING AGENTS, SEALANTS AND OTHER MATERIALS. OBEY THE MATERIAL MANUFACTURER'S INSTRUCTIONS AND THE LOCAL REGULATIONS. MAKE SURE THAT THERE IS A GOOD FLOW OF AIR THROUGH THE WORK AREA. DO NOT BREATHE THE FUMES. DO NOT SMOKE. DO NOT USE THESE MATERIALS NEAR A FLAME, SPARKS OR SOURCES OF HEAT. USE PROTECTIVE CLOTHING, GOGGLES AND GLOVES. IF YOU GET ONE OF THESE MATERIALS ON YOUR SKIN OR IN YOUR EYES, FLUSH IT AWAY WITH A FLOW OF CLEAN WATER. IF YOU GET ONE OF THESE MATERIALS IN YOUR MOUTH, GET IMMEDIATE MEDICAL AID. IN GENERAL, THESE MATERIALS ARE POISONOUS, FLAMMABLE AND SKIN IRRITANTS.**

CAUTION: **DO ALL THE WORK ON A CLEAN, SOFT SURFACE TO PREVENT DAMAGE TO THE COMPONENTS.**

SUB TASK 25-41-51-010-063-A01

D2549010400800 D2549010402000 D2549010402800 D2549010607400
D2549010607600 D2549010607800 D2549010609000 D2549010609400
D2549010609800 D2549010610400 D2549010611200 D2549010611600
D2549010611800 D2549010612000 D2549010613800 D2549020400400
D2549020403800 D2549020404600 D2549020404800 D2549020405000
D2549020405200 D2549020405400 D2549020510600 D2549020510800
D2549020511000 D2549020511600 D2549020511800 D2549020512400
D2549020512600 D2549020512800 D2549020513600 D2549020514600
D2549020514800 D2549020711600 D2549020800200 D2549020800400
D2549020801000 D2549020802000 D2549020802400 D2549020802600
D2549020803000 D2549020803200 D2549020803400 D2549020805000
D2549020805200 D2549020805600 D2549020806400 D2549020806600
D2549020807400 D2549020807600 D2549020807800 D2549020808200
D2549020808400 D2549020809000 D2549020809400 D2549020809800
D2549020810400 D2549020812000 D2549020813600 D2549020814200

D2549020814600 D2549030402000 D2549030402200 D2549030402400 D2549030403400 D2549030403600 D2549030404400 D2549030404600 D2549030405200 D2549030405400 D2549030407200 D2549030408200 D2549030408600 D2549030610600 D2549030611200 D2549030611800 D2549030612200 D2549030612600 D2549030612800 D2549030613200 D2549030613400 D2549030614600 R225401134-010 R225401134-012 R225401134-026 R225401134-028 R225401134-030 R225401134-032 R225401134-034 R225401134-036 R225401168-002 R225401168-008 R225401168-010 R225401168-012 R225401168-022 R225401168-024 R225401168-026 R225401183-000 R225401183-002 R225401192-002 R225401199-006 R225401605-002 R225401619-002 R225401629-000 R225401629-002 R225401639-000 R225401639-002 R225401643-000 R225401643-002 R225401643-004 R225401693-000

1. Removal of the Toilet Unit and of the Toilet Shroud (12E-1)

NOTE: **See TABLE 3422 for the references for the replacement procedures of permanent installed parts.**

More data for bonded parts are given in column SEE REPAIR TASK. Use the data for the selection of the related repair solution.

IPL FIG. ITEM	COMPONENT PART NAME	IPL FIG. ITEM	REPLACEMENT PART NAME	SEE REPAIR TASK
12E-001 12E-010 12E-020	Toilet Unit and Toilet Shroud Toilet Shroud Assembly Colourless Toilet Shroud	12E-030 12E-040	Colourless Toilet Shroud Colourless Ring Cover	Replacement of the Bonded Parts Material No. 08-018 Solvent-Based Synthetic Rubber Adhesive
12E-001 12E-010	Toilet Unit and Toilet Shroud Toilet Shroud Assembly	12E-020 12E-050	Colourless Toilet Shroud Spacer	Replacement of the Bonded Parts Material No. 08-025 Two Component Polyurethane Adhesive

Table 3422
Reference list for the replacement of permanent installed parts

12E-001 12E-010	Toilet Unit and Toilet Shroud Toilet Shroud Assembly	12E-060	Hose Section	Replacement of the Bonded Parts Material No. 08-026 Adhesive/Sealant one Part, RTV Silicone Rubber
12E-001 12E-090 12E-130	Toilet Unit and Toilet Shroud Toilet Seat Assembly Unpainted Toilet Cover	12E-140	Unpainted Buffer	Replacement of the Bonded Parts Material No. 08-738 SI-COMET 63 - Cyanacrylat Adhesive
12E-001 12E-090 12E-150	Toilet Unit and Toilet Shroud Toilet Seat Assembly Unpainted Toilet Seat	12E-160	Unpainted Buffer	Replacement of the Bonded Parts Material No. 08-738 SI-COMET 63 - Cyanacrylat Adhesive
12E-001 12E-090 12E-150	Toilet Unit and Toilet Shroud Toilet Seat Assembly Unpainted Toilet Seat	12E-170	Buffer	Replacement of the Bonded Parts Material No. 08-738 SI-COMET 63 - Cyanacrylat Adhesive

Table 3422
Reference list for the replacement of permanent installed parts

(b) Remove the screws 12E-070, the nuts 12E-080 and the toilet shroud assembly 12E-010 from the lavatory structure.

(c) Remove the nuts 12E-100, the gaskets 12E-110 and the toilet seat assembly 12E-090 from the toilet shroud assembly 12E-010.

(d) Disassemble the toilet seat assembly 12E-090 as follows:

1 Remove the unpainted fasteners 12E-120 and the unpainted toilet cover 12E-130 from the unpainted toilet seat 12E-150.

(e) Remove the screws 12E-200, the washers 12E-220 and the support bracket 12E-190 from the lavatory structure.

(f) Remove the screws 12E-210, the washers 12E-220, the nuts 12E-230 and the support bracket 12E-180 from the lavatory structure.

(g) Remove the ground cable from the toilet assembly 12E-270.

NOTE: For further instructions, see CMMV 38-34-20_29780 (toilet assembly).

NOTE: For further instructions, see CMMV 38-34-30_29780 (toilet assembly).

(h) Remove the bolts 12E-240, the lock washers 12E-250, the washers 12E-260 and the toilet assembly 12E-270 from the lavatory structure.

SUB TASK 25-41-51-010-063-B01
D2549010603600

2. Removal of the Toilet Unit and of the Toilet Shroud (12E-1)

NOTE: See TABLE 3423 for the references for the replacement procedures of permanent installed parts.

More data for bonded parts are given in column SEE REPAIR TASK. Use the data for the selection of the related repair solution.

IPL FIG. ITEM	COMPONENT PART NAME	IPL FIG. ITEM	REPLACEMENT PART NAME	SEE REPAIR TASK
12E-001 12E-010 12E-020	Toilet Unit and Toilet Shroud Toilet Shroud Assembly Colourless Toilet Shroud	12E-030 12E-040	Colourless Toilet Shroud Colourless Ring Cover	Replacement of the Bonded Parts Material No. 08-018 Solvent-Based

Table 3423
Reference list for the replacement of permanent installed parts

				Synthetic Rubber Adhesive
12E-001 12E-010	Toilet Unit and Toilet Shroud Toilet Shroud Assembly	12E-020 12E-050	Colourless Toilet Shroud Spacer	Replacement of the Bonded Parts Material No. 08-025 Two Component Polyurethane Adhesive
12E-001 12E-010	Toilet Unit and Toilet Shroud Toilet Shroud Assembly	12E-060	Hose Section	Replacement of the Bonded Parts Material No. 08-026 Adhesive/Sealant one Part, RTV Silicone Rubber
12E-001 12E-090 12E-130	Toilet Unit and Toilet Shroud Toilet Seat Assembly Unpainted Toilet Cover	12E-140	Unpainted Buffer	Replacement of the Bonded Parts Material No. 08-738 SICOMET 63 - Cyanacrylat Adhesive

Table 3423
Reference list for the replacement of permanent installed parts

12E-001 12E-090 12E-150	Toilet Unit and Toilet Shroud Toilet Seat Assembly Unpainted Toilet Seat	12E-160	Unpainted Buffer	Replacement of the Bonded Parts Material No. 08-738 SICOMET 63 - Cyanacrylat Adhesive
12E-001 12E-090 12E-150	Toilet Unit and Toilet Shroud Toilet Seat Assembly Unpainted Toilet Seat	12E-170	Buffer	Replacement of the Bonded Parts Material No. 08-738 SICOMET 63 - Cyanacrylat Adhesive

Table 3423
Reference list for the replacement of permanent installed parts

(b) Remove the screws 12E-070, the nuts 12E-080 and the toilet shroud assembly 12E-010 from the lavatory structure.

(c) Remove the nuts 12E-100, the gaskets 12E-110 and the toilet seat assembly 12E-090 from the toilet shroud assembly 12E-010.

(d) Disassemble the toilet seat assembly 12E-090 as follows:

1 Remove the unpainted fasteners 12E-120 and the unpainted toilet cover 12E-130 from the unpainted toilet seat 12E-150.

(e) Remove the screws 12E-200, the washers 12E-220 and the support bracket 12E-190 from the lavatory structure.

(f) Remove the screws 12E-210, the washers 12E-220, the nuts 12E-230 and the support bracket 12E-180 from the lavatory structure.

(g) Remove the ground cable from the toilet assembly 12E-270.

NOTE: For further instructions, see CMMV 38-34-20_29780 (toilet assembly).

(h) Remove the bolts 12E-240, the lock washers 12E-250, the washers 12E-260 and the toilet assembly 12E-270 from the lavatory structure.

TASK 25-41-51-000-809-G01
D2549030404800 D2549030406400 R225401648-000 R225401648-002

95. Removal of the Toilet Unit and of the Toilet Shroud

A. General

A complete disassembly of the component is not necessary and not recommended.

Do not disassemble the component more than it is necessary for:

- Cleaning
- Visual Inspection
- Replacement of defective parts.

B. Job Set-up Information
(1) Consumable Materials

REFERENCE	DESIGNATION
08-018	Solvent-Based Synthetic Rubber Adhesive
08-025	Two Component Polyurethane Adhesive
08-026	Adhesive/Sealant one Part, RTV Silicone Rubber
	SICOMET 63 - Cyanacrylat Adhesive

Table 3424
Consumable Materials

C. Procedure

WARNING: **BE CAREFUL WHEN YOU USE SOLVENTS/CLEANING AGENTS, SEALANTS AND OTHER MATERIALS. OBEY THE MATERIAL MANUFACTURER'S INSTRUCTIONS AND THE LOCAL REGULATIONS. MAKE SURE THAT THERE IS A GOOD FLOW OF AIR THROUGH THE WORK AREA. DO NOT BREATHE THE FUMES. DO NOT SMOKE. DO NOT USE THESE MATERIALS NEAR A FLAME, SPARKS OR SOURCES OF HEAT. USE PROTECTIVE CLOTHING, GOGGLES AND GLOVES. IF YOU GET ONE OF THESE MATERIALS ON YOUR SKIN OR IN YOUR EYES, FLUSH IT AWAY WITH A FLOW OF CLEAN WATER. IF YOU GET ONE OF THESE MATERIALS IN YOUR MOUTH, GET IMMEDIATE MEDICAL AID. IN GENERAL, THESE MATERIALS ARE POISONOUS, FLAMMABLE AND SKIN IRRITANTS.**

CAUTION: **DO ALL THE WORK ON A CLEAN, SOFT SURFACE TO PREVENT DAMAGE TO THE COMPONENTS.**

SUB TASK 25-41-51-010-102-A01
D2549030404800 D2549030406400 R225401648-000 R225401648-002

1. Removal of the Toilet Unit and of the Toilet Shroud (12F-1)

NOTE: **See TABLE 3425 for the references for the replacement procedures of permanent installed parts.**

More data for bonded parts are given in column SEE REPAIR TASK. Use the data for the selection of the related repair solution.

IPL FIG. ITEM	COMPONENT PART NAME	IPL FIG. ITEM	REPLACEMENT PART NAME	SEE REPAIR TASK
12F-001 12F-010 12F-020	Toilet Unit and Toilet Shroud Toilet Shroud Assembly Colourless Toilet Shroud	12F-030 12F-040	Colourless Toilet Shroud Colourless Ring Cover	Replacement of the Bonded Parts Material No. 08-018 Solvent-Based Synthetic Rubber Adhesive
12F-001 12F-010	Toilet Unit and Toilet Shroud	12F-020 12F-050	Colourless Toilet Shroud	Replacement of the

Table 3425
Reference list for the replacement of permanent installed parts

	Toilet Shroud Assembly		Spacer	Bonded Parts Material No. 08-025 Two Component Polyure-thane Adhesive
12F-001 12F-010	Toilet Unit and Toilet Shroud Toilet Shroud Assembly	12F-060	Hose Section	Replace-ment of the Bonded Parts Material No. 08-026 Ad-hesive/Sea-lant one Part, RTV Si-licone Rubber
12F-001 12F-090 12F-130	Toilet Unit and Toilet Shroud Toilet Seat Assembly Unpainted Toilet Cover	12F-140	Unpainted Buffer	Replace-ment of the Bonded Parts Material No. 08-738 SI-COMET 63 - Cyanacrylat Adhesive

Table 3425
Reference list for the replacement of permanent installed parts

12F-001 12F-090 12F-150	Toilet Unit and Toilet Shroud Toilet Seat Assembly Unpainted Toilet Seat	12F-160	Unpainted Buffer	Replace-ment of the Bonded Parts Material No. 08-738 SI-COMET 63 - Cyanacrylat Adhesive
12F-001 12F-090 12F-150	Toilet Unit and Toilet Shroud Toilet Seat Assembly Unpainted Toilet Seat	12F-170	Buffer	Replace-ment of the Bonded Parts Material No. 08-738 SI-COMET 63 - Cyanacrylat Adhesive

Table 3425
Reference list for the replacement of permanent installed parts

(b) Remove the screws 12F-070, the nuts 12F-080 and the toilet shroud assembly 12F-010 from the lavatory structure.

(c) Remove the nuts 12F-100, the gaskets 12F-110 and the toilet seat assembly 12F-090 from the toilet shroud assembly 12F-010.

(d) Disassemble the toilet seat assembly 12F-090 as follows:

1 Remove the unpainted fasteners 12F-120 and the unpainted toilet cover 12F-130 from the unpainted toilet seat 12F-150.

(e) Remove the screws 12F-200, the washers 12F-220 and the support bracket 12F-190 from the lavatory structure.

(f) Remove the screws 12F-210, the washers 12F-220, the nuts 12F-230 and the support bracket 12F-180 from the lavatory structure.

(g) Remove the ground cable from the toilet assembly 12F-270.

NOTE: For further instructions, see CMMV 38-34-20_29780 (toilet assembly).

NOTE: For further instructions, see CMMV 38-34-30_29780 (toilet assembly).

(h) Remove the bolts 12F-240, the lock washers 12F-250, the washers 12F-260 and the toilet assembly 12F-270 from the lavatory structure.

TASK 25-41-51-000-809-H01

D2547160900200 D2547160900400 D2549010401000 D2549010401400 D2549010401600
D2549010401800 D2549010402200 D2549010402400 D2549010403200 D2549010403400
D2549010403600 D2549010403800 D2549010404000 D2549010404200 D2549010404400
D2549010404600 D2549010404800 D2549010405000 D2549010405200 D2549010405400
D2549010405800 D2549010406000 D2549010406200 D2549010406400 D2549010406800
D2549010407000 D2549010610600 D2549010613600 D2549020300000 D2549020300400
D2549020300600 D2549020300800 D2549020301000 D2549020301600 D2549020301800
D2549020302000 D2549020302800 D2549020400600 D2549020400800 D2549020401000
D2549020401200 D2549020401400 D2549020401600 D2549020402000 D2549020402200
D2549020402400 D2549020402600 D2549020403000 D2549020403200 D2549020403400
D2549020403600 D2549020404000 D2549020406000 D2549020406200 D2549020406400
D2549020406600 D2549020406800 D2549020407000 D2549020407200 D2549020407400
D2549020407600 D2549020407800 D2549020408000 D2549020408200 D2549020408600
D2549020408800 D2549020409000 D2549020409200 D2549020409400 D2549020409600
D2549020409800 D2549020410200 D2549020410400 D2549020410600 D2549020410800
D2549020411000 D2549020411200 D2549020411400 D2549020411600 D2549020411800
D2549020412000 D2549020412200 D2549020412400 D2549020412600 D2549020412800
D2549020413000 D2549020413200 D2549020413400 D2549020413600 D2549020413800
D2549020414000 D2549020414200 D2549020414600 D2549020414800 D2549020804400
D2549020807200 D2549020809600 D2549020811800 D2549020813200 D2549020813800
D2549030407400 D2549030407600 D2549030409000 D2549030409200 D2549030409400
D2549030409600 D2549030410000 D2549030410200 D2549030410600 D2549030410800
D2549030411200 D2549030411400 D2549030411600 D2549030411800 D2549030412000
D2549030412400 D2549030412600 D2549030412800 D2549030413000 D2549030413200
D2549030413600 D2549030414000 D2549030414200 D2549030414400 D2549030414800
D2549030700000 D2549030700200 D2549030700400 D2549030701000 D2549030701200
D2549030701400 D2549030701600 D2549030702200 D2549030702400 D2549030702600
D2549030702800 D2549030703200 D2549030703400 D2549030703600 D2549030703800
D2549030704000 D2549030704800 D2549030705200 D2549040500200 D2549040500400
D2549040500800 D2549040501000 D2549040501200 D2549040501400 D2549040501600
D2549040501800 D2549040502000 R225401134-014 R225401134-038 R225401136-006
R225401136-008 R225401136-012 R225401136-014 R225401136-024 R225401152-010
R225401183-004 R225401183-006 R225401196-012 R225401196-014 R225401196-016
R225401196-018 R225401196-020 R225401196-022 R225401196-024 R225401196-042
R225401196-058 R225401196-060 R225401196-062 R225401196-064 R225401196-066
R225401196-068 R225401196-070 R225401199-010 R225401199-012 R225401602-000
R225401611-000 R225401611-012 R225401611-014 R225401611-016 R225401611-018
R225401611-020 R225401624-000 R225401627-000 R225401627-002 R225401627-004
R225401643-006 R225401643-008 R225401646-002 R225401648-004 R225401648-006
R225401648-008 R225401649-000 R225401671-000 R225401671-002 R225401673-002
R225401673-004 R225401673-006 R225401675-000 R225401676-000 R225401683-000
R225401685-000 R225401685-002 R225401688-000 R225401689-004 R225401689-006

R225401691-000 R225401691-002 R225401697-000 R225401697-002 R225401803-000 R225401803-002 R225401811-000

96. Removal of the Toilet Unit and of the Toilet Shroud

A. General

A complete disassembly of the component is not necessary and not recommended.

Do not disassemble the component more than it is necessary for:

- Cleaning
- Visual Inspection
- Replacement of defective parts.

B. Job Set-up Information
(1) Consumable Materials

REFERENCE	DESIGNATION
08-018	Solvent-Based Synthetic Rubber Adhesive
08-025	Two Component Polyurethane Adhesive
08-026	Adhesive/Sealant one Part, RTV Silicone Rubber
	SICOMET 63 - Cyanacrylat Adhesive

Table 3426
Consumable Materials

C. Procedure

WARNING: **BE CAREFUL WHEN YOU USE SOLVENTS/CLEANING AGENTS, SEALANTS AND OTHER MATERIALS. OBEY THE MATERIAL MANUFACTURER'S INSTRUCTIONS AND THE LOCAL REGULATIONS. MAKE SURE THAT THERE IS A GOOD FLOW OF AIR THROUGH THE WORK AREA. DO NOT BREATHE THE FUMES. DO NOT SMOKE. DO NOT USE THESE MATERIALS NEAR A FLAME, SPARKS OR SOURCES OF HEAT. USE PROTECTIVE CLOTHING, GOGGLES AND GLOVES. IF YOU GET ONE OF THESE MATERIALS ON YOUR SKIN OR IN YOUR EYES, FLUSH IT AWAY WITH A FLOW OF CLEAN WATER. IF YOU GET ONE OF THESE MATERIALS IN YOUR MOUTH, GET IMMEDIATE MEDICAL AID. IN GENERAL, THESE MATERIALS ARE POISONOUS, FLAMMABLE AND SKIN IRRITANTS.**

CAUTION: **DO ALL THE WORK ON A CLEAN, SOFT SURFACE TO PREVENT DAMAGE TO THE COMPONENTS.**

SUB TASK 25-41-51-010-065-A01

D2547160900200 D2547160900400 D2549010401000 D2549010401400
D2549010401600 D2549010401800 D2549010402200 D2549010402400
D2549010403200 D2549010403400 D2549010403600 D2549010403800
D2549010404000 D2549010404200 D2549010404400 D2549010404600
D2549010404800 D2549010405000 D2549010405200 D2549010405400
D2549010405800 D2549010406000 D2549010406200 D2549010406400
D2549010406800 D2549010407000 D2549010610600 D2549010613600
D2549020300000 D2549020300400 D2549020300600 D2549020300800
D2549020301000 D2549020301600 D2549020301800 D2549020302000
D2549020302800 D2549020400600 D2549020400800 D2549020401000
D2549020401200 D2549020401400 D2549020401600 D2549020402000
D2549020402200 D2549020402400 D2549020402600 D2549020403000
D2549020403200 D2549020403400 D2549020403600 D2549020404000
D2549020406000 D2549020406200 D2549020406400 D2549020406600
D2549020406800 D2549020407000 D2549020407200 D2549020407400
D2549020407600 D2549020407800 D2549020408000 D2549020408200
D2549020408600 D2549020408800 D2549020409000 D2549020409200
D2549020409400 D2549020409600 D2549020409800 D2549020410200
D2549020410400 D2549020410600 D2549020410800 D2549020411000
D2549020411200 D2549020411400 D2549020411600 D2549020411800
D2549020412000 D2549020412200 D2549020412400 D2549020412600
D2549020412800 D2549020413000 D2549020413200 D2549020413400
D2549020413600 D2549020413800 D2549020414000 D2549020414200
D2549020414600 D2549020414800 D2549020804400 D2549020807200
D2549020809600 D2549020811800 D2549020813200 D2549020813800
D2549030407400 D2549030407600 D2549030409000 D2549030409200
D2549030409400 D2549030409600 D2549030410000 D2549030410200
D2549030410600 D2549030410800 D2549030411200 D2549030411400
D2549030411600 D2549030411800 D2549030412000 D2549030412400
D2549030412600 D2549030412800 D2549030413000 D2549030413200

D2549030413600 D2549030414000 D2549030414200 D2549030414400 D2549030414800 D2549030700000 D2549030700200 D2549030700400 D2549030701000 D2549030701400 D2549030701600 D2549030702200 D2549030702400 D2549030702600 D2549030702800 D2549030703200 D2549030703400 D2549030703600 D2549030703800 D2549030704000 D2549030704800 D2549030705200 D2549040500200 D2549040500400 D2549040500800 D2549040501000 D2549040501200 D2549040501400 D2549040501600 D2549040501800 D2549040502000 R225401134-014 R225401134-038 R225401136-006 R225401136-008 R225401136-012 R225401136-014 R225401136-024 R225401152-010 R225401183-004 R225401183-006 R225401196-012 R225401196-014 R225401196-016 R225401196-018 R225401196-020 R225401196-022 R225401196-024 R225401196-042 R225401196-058 R225401196-060 R225401196-062 R225401196-064 R225401196-066 R225401196-068 R225401196-070 R225401199-010 R225401199-012 R225401602-000 R225401611-000 R225401611-012 R225401611-014 R225401611-016 R225401611-018 R225401611-020 R225401624-000 R225401627-000 R225401627-002 R225401627-004 R225401643-006 R225401643-008 R225401646-002 R225401648-004 R225401648-006 R225401648-008 R225401649-000 R225401671-000 R225401671-002 R225401673-002 R225401673-004 R225401673-006 R225401675-000 R225401676-000 R225401683-000 R225401685-000 R225401685-002 R225401688-000 R225401689-004 R225401689-006 R225401691-000 R225401691-002 R225401697-000 R225401697-002 R225401803-000 R225401803-002 R225401811-000

1. Removal of the Toilet Unit and of the Toilet Shroud (12G-1)

NOTE: **See TABLE 3427 for the references for the replacement procedures of permanent installed parts.**

More data for bonded parts are given in column SEE REPAIR TASK. Use the data for the selection of the related repair solution.

IPL FIG. ITEM	COMPONENT PART NAME	IPL FIG. ITEM	REPLACEMENT PART NAME	SEE REPAIR TASK
12G-001 12G-010 12G-020	Toilet Unit and Toilet Shroud Toilet Shroud Assembly Colourless Toilet Shroud	12G-030 12G-040	Colourless Toilet Shroud Colourless Ring Cover	Replacement of the Bonded Parts Material No. 08-018 Solvent-Based Synthetic

Table 3427
Reference list for the replacement of permanent installed parts

				Rubber Adhesive
12G-001 12G-010	Toilet Unit and Toilet Shroud Toilet Shroud Assembly	12G-020 12G-050	Colourless Toilet Shroud Spacer	Replace-ment of the Bonded Parts Material No. 08-025 Two Component Polyure-thane Adhesive
12G-001 12G-010	Toilet Unit and Toilet Shroud Toilet Shroud Assembly	12G-060	Hose Section	Replace-ment of the Bonded Parts Material No. 08-026 Ad-hesive/Sea-lant one Part, RTV Silicone Rubber
12G-001 12G-090 12G-130	Toilet Unit and Toilet Shroud Toilet Seat Assembly Toilet Cover Assembly	12G-135 12G-140	Unpainted Toilet Cover Unpainted Buffer	Replace-ment of the Bonded Parts Material No. 08-738 SI-COMET 63 - Cyanacry-lat Adhesive
12G-001 12G-090 12G-150	Toilet Unit and Toilet Shroud Toilet Seat Assembly Seat Assembly	12G-155 12G-160	Unpainted Seat Assembly Unpainted Buffer	Replace-ment of the Bonded Parts Material No. 08-738

Table 3427
Reference list for the replacement of permanent installed parts

				SICOMET 63 - Cyana-crylat Adhesive
12G-001 12G-090 12G-150	Toilet Unit and Toilet Shroud Toilet Seat Assembly Seat Assembly	12G-155 12G-170	Unpainted Seat Assembly Buffer	Replace-ment of the Bonded Parts Material No. 08-738 SI-COMET 63 - Cyanacry-lat Adhesive
12G-001 12G-090 12G-150	Toilet Unit and Toilet Shroud Toilet Seat Assembly Seat Assembly	12G-155 12G-180	Unpainted Seat Assembly Buffer	Replace-ment of the Bonded Parts Material No. 08-738 SI-COMET 63 - Cyanacry-lat Adhesive

Table 3427
Reference list for the replacement of permanent installed parts

12G-001 12G-190	Toilet Unit and Toilet Shroud Support Bracket	12G-195	Section	Replace-ment of the Bonded Parts Material No. 08-026 Ad-hesive/Sea-lant one Part, RTV Silicone Rubber
12G-001 12G-200	Toilet Unit and Toilet Shroud Support Bracket	12G-205	Section	Replace-ment of the Bonded Parts Material No. 08-026 Ad-hesive/Sea-lant one Part, RTV Silicone Rubber

Table 3427
Reference list for the replacement of permanent installed parts

(b) Remove the screws 12G-070, the nuts 12G-080 and the toilet shroud assembly 12G-010 from the lavatory structure.

(c) Remove the nuts 12G-100, the gaskets 12G-110 and the toilet seat assembly 12G-090 from the toilet shroud assembly 12G-010.

(d) Disassemble the toilet seat assembly 12G-090 as follows:

1 Remove the fasteners 12G-120 or the unpainted fasteners 12G-125 and the toilet cover assembly 12G-130 from the seat assembly 12G-150.

(e) Remove the screws 12G-210, the washers 12G-230 and the support bracket 12G-190 from the lavatory structure.

(f) Remove the screws 12G-220, the washers 12G-230, 12G-235, the nuts 12G-240 and the support bracket 12G-200 from the lavatory structure.

(g) Remove the ground cable from the toilet assembly 12G-280.

NOTE: For further instructions, see CMMV 38-34-20_29780 (toilet assembly).

NOTE: For further instructions, see CMMV 38-34-30_29780 (toilet assembly).

(h) Remove the bolts 12G-250, the lock washers 12G-260, the washers 12G-270 and the toilet assembly 12G-280 from the lavatory structure.

SUB TASK 25-41-51-010-065-B01
D2549030701200

2. Removal of the Toilet Unit and of the Toilet Shroud (12G-1)

NOTE: See TABLE 3428 for the references for the replacement procedures of permanent installed parts.

More data for bonded parts are given in column SEE REPAIR TASK. Use the data for the selection of the related repair solution.

IPL FIG. ITEM	COMPONENT PART NAME	IPL FIG. ITEM	REPLACEMENT PART NAME	SEE REPAIR TASK
12G-001 12G-010 12G-020	Toilet Unit and Toilet Shroud Toilet Shroud Assembly Colourless Toilet Shroud	12G-030 12G-040	Colourless Toilet Shroud Colourless Ring Cover	Replacement of the Bonded Parts Material No. 08-018 Solvent-Based Synthetic Rubber Adhesive
12G-001 12G-010	Toilet Unit and Toilet Shroud Toilet Shroud Assembly	12G-020 12G-050	Colourless Toilet Shroud Spacer	Replacement of the Bonded Parts Material No. 08-025 Two Component

Table 3428
Reference list for the replacement of permanent installed parts

				Polyure-thane Adhesive
12G-001 12G-010	Toilet Unit and Toilet Shroud Toilet Shroud Assembly	12G-060	Hose Section	Replace-ment of the Bonded Parts Material No. 08-026 Ad-hesive/Sea-lant one Part, RTV Silicone Rubber
12G-001 12G-090 12G-130	Toilet Unit and Toilet Shroud Toilet Seat Assembly Toilet Cover Assembly	12G-135 12G-140	Unpainted Toilet Cover Unpainted Buffer	Replace-ment of the Bonded Parts Material No. 08-738 SI-COMET 63 - Cyanacry-lat Adhesive
12G-001 12G-090 12G-150	Toilet Unit and Toilet Shroud Toilet Seat Assembly Seat Assembly	12G-155 12G-160	Unpainted Seat Assembly Unpainted Buffer	Replace-ment of the Bonded Parts Material No. 08-738 SI-COMET 63 - Cyanacry-lat Adhesive
12G-001 12G-090 12G-150	Toilet Unit and Toilet Shroud Toilet Seat Assembly Seat Assembly	12G-155 12G-170	Unpainted Seat Assembly Buffer	Replace-ment of the Bonded Parts Material No. 08-738

Table 3428
Reference list for the replacement of permanent installed parts

				SICOMET 63 - Cyana-crylat Adhesive
12G-001 12G-090 12G-150	Toilet Unit and Toilet Shroud Toilet Seat Assembly Seat Assembly	12G-155 12G-180	Unpainted Seat Assembly Buffer	Replace-ment of the Bonded Parts Material No. 08-738 SI-COMET 63 - Cyanacry-lat Adhesive
12G-001 12G-190	Toilet Unit and Toilet Shroud Support Bracket	12G-195	Section	Replace-ment of the Bonded Parts Material No. 08-026 Ad-hesive/Sea-lant one Part, RTV Silicone Rubber
12G-001 12G-200	Toilet Unit and Toilet Shroud Support Bracket	12G-205	Section	Replace-ment of the Bonded Parts Material No. 08-026 Ad-hesive/Sea-lant one Part, RTV Silicone Rubber

Table 3428
Reference list for the replacement of permanent installed parts

(b) Remove the screws 12G-070, the nuts 12G-080 and the toilet shroud assembly 12G-010 from the lavatory structure.

(c) Remove the nuts 12G-100, the gaskets 12G-110 and the toilet seat assembly 12G-090 from the toilet shroud assembly 12G-010.

(d) Disassemble the toilet seat assembly 12G-090 as follows:

1 Remove the fasteners 12G-120 or the unpainted fasteners 12G-125 and the toilet cover assembly 12G-130 from the seat assembly 12G-150.

(e) Remove the screws 12G-210, the washers 12G-230 and the support bracket 12G-200 from the lavatory structure.

(f) Remove the screws 12G-220, the washers 12G-230, 12G-235, the nuts 12G-240 and the support bracket 12G-190 from the lavatory structure.

(g) Remove the ground cable from the toilet assembly 12G-280.

NOTE: For further instructions, see CMMV 38-34-20_29780 (toilet assembly).

NOTE: For further instructions, see CMMV 38-34-30_29780 (toilet assembly).

(h) Remove the bolts 12G-250, the lock washers 12G-260, the washers 12G-270 and the toilet assembly 12G-280 from the lavatory structure.

TASK 25-41-51-000-809-J01
D2547161903000 D2549010405600 D2549030412200 D2549030413400 D2549030700600 D2549030700800 D2549030701800 D2549030702000 D2549030703000 D2549030704200 D2549030704400 D2549030704600 R225401808-000 R225401814-000

97. Removal of the Toilet Unit and of the Toilet Shroud

A. General

A complete disassembly of the component is not necessary and not recommended.

Do not disassemble the component more than it is necessary for:

- Cleaning
- Visual Inspection
- Replacement of defective parts.

B. Job Set-up Information
(1) Consumable Materials

REFERENCE	DESIGNATION
08-018	Solvent-Based Synthetic Rubber Adhesive
08-025	Two Component Polyurethane Adhesive
08-026	Adhesive/Sealant one Part, RTV Silicone Rubber
	SICOMET 63 - Cyanacrylat Adhesive

Table 3429
Consumable Materials

C. Procedure

WARNING: **BE CAREFUL WHEN YOU USE SOLVENTS/CLEANING AGENTS, SEALANTS AND OTHER MATERIALS. OBEY THE MATERIAL MANUFACTURER'S INSTRUCTIONS AND THE LOCAL REGULATIONS. MAKE SURE THAT THERE IS A GOOD FLOW OF AIR THROUGH THE WORK AREA. DO NOT BREATHE THE FUMES. DO NOT SMOKE. DO NOT USE THESE MATERIALS NEAR A FLAME, SPARKS OR SOURCES OF HEAT. USE PROTECTIVE CLOTHING, GOGGLES AND GLOVES. IF YOU GET ONE OF THESE MATERIALS ON YOUR SKIN OR IN YOUR EYES, FLUSH IT AWAY WITH A FLOW OF CLEAN WATER. IF YOU GET ONE OF THESE MATERIALS IN YOUR MOUTH, GET IMMEDIATE MEDICAL AID. IN GENERAL, THESE MATERIALS ARE POISONOUS, FLAMMABLE AND SKIN IRRITANTS.**

CAUTION: **DO ALL THE WORK ON A CLEAN, SOFT SURFACE TO PREVENT DAMAGE TO THE COMPONENTS.**

SUB TASK 25-41-51-010-066-A01

D2549010405600 D2549030412200 D2549030413400 D2549030700600 D2549030700800 D2549030701800 D2549030702000 D2549030703000 D2549030704200 D2549030704400 D2549030704600 R225401808-000 R225401814-000

1. Removal of the Toilet Unit and of the Toilet Shroud (12H-1)

NOTE: **See TABLE 3430 for the references for the replacement procedures of permanent installed parts.**

More data for bonded parts are given in column SEE REPAIR TASK. Use the data for the selection of the related repair solution.

IPL FIG. ITEM	COMPONENT PART NAME	IPL FIG. ITEM	REPLACEMENT PART NAME	SEE REPAIR TASK
12H-001 12H-010 12H-020	Toilet Unit and Toilet Shroud Toilet Shroud Assembly Colourless Toilet Shroud	12H-030 12H-040	Colourless Toilet Shroud Colourless Ring Cover	Replacement of the Bonded Parts Material No. 08-018 Solvent-Based Synthetic

Table 3430
Reference list for the replacement of permanent installed parts

				Rubber Adhesive
12H-001 12H-010	Toilet Unit and Toilet Shroud Toilet Shroud Assembly	12H-020 12H-050	Colourless Toilet Shroud Spacer	Replace-ment of the Bonded Parts Material No. 08-025 Two Com-ponent Polyure-thane Adhesive
12H-001 12H-010	Toilet Unit and Toilet Shroud Toilet Shroud Assembly	12H-060	Hose Section	Replace-ment of the Bonded Parts Material No. 08-026 Adhesive/ Sealant one Part, RTV Silicone Rubber
12H-001 12H-090 12H-140	Toilet Unit and Toilet Shroud Toilet Seat Assembly Toilet Cover Assembly	12H-150 12H-160	Unpainted Toilet Cover Unpainted Buffer	Replace-ment of the Bonded Parts Material No. 08-738 SICOMET 63 - Cyana-crylat Adhesive
12H-001 12H-090 12H-170	Toilet Unit and Toilet Shroud Toilet Seat Assembly Seat Assembly	12H-180 12H-190	Unpainted Seat Assembly Unpainted Buffer	Replace-ment of the Bonded Parts

Table 3430
Reference list for the replacement of permanent installed parts

				Material No. 08-738 SICOMET 63 - Cyana-crylat Adhesive
12H-001 12H-090 12H-170	Toilet Unit and Toilet Shroud Toilet Seat Assembly Seat Assembly	12H-180 12H-200	Unpainted Seat Assembly Buffer	Replace-ment of the Bonded Parts Material No. 08-738 SICOMET 63 - Cyana-crylat Adhesive
12H-001 12H-090 12H-170	Toilet Unit and Toilet Shroud Toilet Seat Assembly Seat Assembly	12H-180 12H-210	Unpainted Seat Assembly Buffer	Replace-ment of the Bonded Parts Material No. 08-738 SICOMET 63 - Cyana-crylat Adhesive

Table 3430
Reference list for the replacement of permanent installed parts

(b) Remove the screws 12H-070, the nuts 12H-080 and the toilet shroud assembly 12H-010 from the lavatory structure.

(c) Remove the nuts 12H-100, the gaskets 12H-110 and the toilet seat assembly 12H-090 from the toilet shroud assembly 12H-010.

(d) Disassemble the toilet seat assembly 12H-090 as follows:

1 Remove the fasteners 12H-120 or the unpainted fasteners 12H-130 and the toilet cover assembly 12H-140 from the seat assembly 12H-170.

(e) Remove the screws 12H-240, the washers 12H-260 and the support bracket 12H-230 from the lavatory structure.

(f) Remove the screws 12H-250, the washers 12H-260, the nuts 12H-270 and the support bracket 12H-220 from the lavatory structure.

(g) Remove the ground cable from the toilet assembly 12H-310.

NOTE: For further instructions, see CMMV 38-34-20_29780 (toilet assembly).

NOTE: For further instructions, see CMMV 38-34-30_29780 (toilet assembly).

(h) Remove the bolts 12H-280, the lock washers 12H-290, the washers 12H-300 and the toilet assembly 12H-310 from the lavatory structure.

SUB TASK 25-41-51-010-066-B01
D2547161903000

2. Removal of the Toilet Unit and of the Toilet Shroud (12H-1)

NOTE: See TABLE 3431 for the references for the replacement procedures of permanent installed parts.

More data for bonded parts are given in column SEE REPAIR TASK. Use the data for the selection of the related repair solution.

IPL FIG. ITEM	COMPONENT PART NAME	IPL FIG. ITEM	REPLACEMENT PART NAME	SEE REPAIR TASK
12H-001 12H-010 12H-020	Toilet Unit and Toilet Shroud Toilet Shroud Assembly Colourless Toilet Shroud	12H-030 12H-040	Colourless Toilet Shroud Colourless Ring Cover	Replacement of the Bonded Parts Material No. 08-018 Solvent-Based Synthetic Rubber Adhesive
12H-001 12H-010	Toilet Unit and Toilet Shroud Toilet Shroud Assembly	12H-020 12H-050	Colourless Toilet Shroud Spacer	Replacement of the Bonded Parts

Table 3431
Reference list for the replacement of permanent installed parts

				Material No. 08-025 Two Component Polyurethane Adhesive
12H-001 12H-010	Toilet Unit and Toilet Shroud Toilet Shroud Assembly	12H-060	Hose Section	Replacement of the Bonded Parts Material No. 08-026 Adhesive/ Sealant one Part, RTV Silicone Rubber
12H-001 12H-090 12H-140	Toilet Unit and Toilet Shroud Toilet Seat Assembly Toilet Cover Assembly	12H-150 12H-160	Unpainted Toilet Cover Unpainted Buffer	Replacement of the Bonded Parts Material No. 08-738 SICOMET 63 - Cyanacrylat Adhesive
12H-001 12H-090 12H-170	Toilet Unit and Toilet Shroud Toilet Seat Assembly Seat Assembly	12H-180 12H-190	Unpainted Seat Assembly Unpainted Buffer	Replacement of the Bonded Parts Material No. 08-738 SICOMET 63 - Cyanacrylat Adhesive

Table 3431
Reference list for the replacement of permanent installed parts

12H-001 12H-090 12H-170	Toilet Unit and Toilet Shroud Toilet Seat Assembly Seat Assembly	12H-180 12H-200	Unpainted Seat Assembly Buffer	Replace-ment of the Bonded Parts Material No. 08-738 SICOMET 63 - Cyana-crylat Adhesive
12H-001 12H-090 12H-170	Toilet Unit and Toilet Shroud Toilet Seat Assembly Seat Assembly	12H-180 12H-210	Unpainted Seat Assembly Buffer	Replace-ment of the Bonded Parts Material No. 08-738 SICOMET 63 - Cyana-crylat Adhesive

Table 3431
Reference list for the replacement of permanent installed parts

(b) Remove the screws 12H-070, the nuts 12H-080 and the toilet shroud assembly 12H-010 from the lavatory structure.

(c) Remove the nuts 12H-100, the gaskets 12H-110 and the toilet seat assembly 12H-090 from the toilet shroud assembly 12H-010.

(d) Disassemble the toilet seat assembly 12H-090 as follows:

1 Remove the fasteners 12H-120 or the unpainted fasteners 12H-130 and the toilet cover assembly 12H-140 from the seat assembly 12H-170.

(e) Remove the screws 12H-240, the washers 12H-260 and the support bracket 12H-230 from the lavatory structure.

(f) Remove the screws 12H-250, the washers 12H-260, the nuts 12H-270 and the support bracket 12H-220 from the lavatory structure.

(g) Remove the ground cable from the toilet assembly 12H-310.

NOTE: For further instructions, see CMMV 38-34-16_29780 (toilet assembly).

(h) Remove the bolts 12H-280, the lock washers 12H-290, the washers 12H-300 and the toilet assembly 12H-310 from the lavatory structure.

TASK 25-41-51-000-809-K01
D2549020712000 D2549020712600 D2549030414600 D2549030705600

98. Removal of the Toilet Unit and of the Toilet Shroud

A. General

A complete disassembly of the component is not necessary and not recommended.

Do not disassemble the component more than it is necessary for:

- Cleaning
- Visual Inspection
- Replacement of defective parts.

B. Job Set-up Information
(1) Consumable Materials

REFERENCE	DESIGNATION
08-025	Two Component Polyurethane Adhesive
08-010A	Epoxy Resin and Hardener Adhesive
08-026	Adhesive/Sealant one Part, RTV Silicone Rubber
	SICOMET 63 - Cyanacrylat Adhesive

Table 3432
Consumable Materials

C. Procedure

WARNING: **BE CAREFUL WHEN YOU USE SOLVENTS/CLEANING AGENTS, SEALANTS AND OTHER MATERIALS. OBEY THE MATERIAL MANUFACTURER'S INSTRUCTIONS AND THE LOCAL REGULATIONS. MAKE SURE THAT THERE IS A GOOD FLOW OF AIR THROUGH THE WORK AREA. DO NOT BREATHE THE FUMES. DO NOT SMOKE. DO NOT USE THESE MATERIALS NEAR A FLAME, SPARKS OR SOURCES OF HEAT. USE PROTECTIVE CLOTHING, GOGGLES AND GLOVES. IF YOU GET ONE OF THESE MATERIALS ON YOUR SKIN OR IN YOUR EYES, FLUSH IT AWAY WITH A FLOW OF CLEAN WATER. IF YOU GET ONE OF THESE MATERIALS IN YOUR MOUTH, GET IMMEDIATE MEDICAL AID. IN GENERAL, THESE MATERIALS ARE POISONOUS, FLAMMABLE AND SKIN IRRITANTS.**

CAUTION: **DO ALL THE WORK ON A CLEAN, SOFT SURFACE TO PREVENT DAMAGE TO THE COMPONENTS.**

SUB TASK 25-41-51-010-067-A01

1. Removal of the Toilet Unit and of the Toilet Shroud (12J-1)

NOTE: **See TABLE 3433 for the references for the replacement procedures of permanent installed parts.**

More data for bonded parts are given in column SEE REPAIR TASK. Use the data for the selection of the related repair solution.

IPL FIG. ITEM	COMPONENT PART NAME	IPL FIG. ITEM	REPLACEMENT PART NAME	SEE REPAIR TASK
12J-001 12J-010	Toilet Unit and Toilet Shroud Toilet Shroud Assembly	12J-020	Spacer	Replacement of the Bonded Parts Material No. 08-025 Two Component Polyurethane Adhesive
12J-001 12J-050 12J-060	Toilet Unit and Toilet Shroud Toilet Seat Assembly Toilet Cover Assembly	12J-070 12J-080	Unpainted Toilet Cover Bushing	Replacement of the Bonded Parts Material No. 08-010A Epoxy Resin

Table 3433
Reference list for the replacement of permanent installed parts

				and Hardener Adhesive
12J-001 12J-050 12J-060	Toilet Unit and Toilet Shroud Toilet Seat Assembly Toilet Cover Assembly	12J-070 12J-090	Unpainted Toilet Cover Unpainted Buffer	Replacement of the Bonded Parts Material No. 08-738 SICO-MET 63 - Cy-anacrylat Adhesive
12J-001 12J-050 12J-100	Toilet Unit and Toilet Shroud Toilet Seat Assembly Seat Assembly	12J-110 12J-120	Unpainted Seat Assembly Unpainted Buffer	Replacement of the Bonded Parts Material No. 08-738 SICO-MET 63 - Cy-anacrylat Adhesive
12J-001 12J-050 12J-100	Toilet Unit and Toilet Shroud Toilet Seat Assembly Seat Assembly	12J-110 12J-130	Unpainted Seat Assembly Buffer	Replacement of the Bonded Parts Material No. 08-738 SICO-MET 63 - Cy-anacrylat Adhesive
12J-001 12J-050 12J-100	Toilet Unit and Toilet Shroud Toilet Seat Assembly Seat Assembly	12J-110 12J-140	Unpainted Seat Assembly Buffer	Replacement of the Bonded Parts Material No. 08-738 SICO-MET 63 - Cy-anacrylat Adhesive

Table 3433
Reference list for the replacement of permanent installed parts

12J-001 12J-210	Toilet Unit and Toilet Shroud Support Bracket	12J-215	Section	Replacement of the Bonded Parts Material No. 08-026 Adhesive/Sealant one Part, RTV Silicone Rubber
12J-001 12J-220	Toilet Unit and Toilet Shroud Support Bracket	12J-225	Section	Replacement of the Bonded Parts Material No. 08-026 Adhesive/Sealant one Part, RTV Silicone Rubber

Table 3433
Reference list for the replacement of permanent installed parts

(b) Remove the screws 12J-030, the nuts 12J-040 and the toilet shroud assembly 12J-010 from the lavatory structure.

(c) Remove the nuts 12J-170, 12J-200, the gaskets 12J-160, 12J-190 and the toilet seat assembly 12J-050 from the toilet shroud assembly 12J-010.

(d) Disassemble the toilet seat assembly 12J-050 as follows:

1 Remove the damper assemblies 12J-150, 12J-180 and the toilet cover assembly 12J-060 from the seat assembly 12J-100.

(e) Remove the screws 12J-230, the washers 12J-250 and the support bracket 12J-220 from the lavatory structure.

(f) Remove the screws 12J-240, the washers 12J-250, the nuts 12J-260 and the support bracket 12J-210 from the lavatory structure.

(g) Remove the ground cable from the toilet assembly 12J-300.

NOTE: For further instructions, see CMMV 38-34-20_29780 (toilet assembly).

NOTE: For further instructions, see CMMV 38-34-30_29780 (toilet assembly).

(h) Remove the bolts 12J-270, the lock washers 12J-280, the washers 12J-290 and the toilet assembly 12J-300 from the lavatory structure.

TASK 25-41-51-000-809-L01
D2549030603600 R225401168-018

99. Removal of the Toilet Unit and of the Toilet Shroud

A. General

- Not applicable

B. Procedure

SUB TASK 25-41-51-000-109-A01

1. Removal of the Toilet Unit and of the Toilet Shroud

(a) Not applicable.

TASK 25-41-51-000-810-A01

D2547161903000 D2549010500000 D2549010500400 D2549010500600 D2549010500800 D2549010501200 D2549010501400 D2549010501600 D2549010501800 D2549010502200 D2549010502600 D2549010502800 D2549010503200 D2549010503400 D2549010503600 D2549010503800 D2549010504600 D2549010505000 D2549010505200 D2549010505400 D2549010505600 D2549010505800 D2549010506000 D2549010506200 D2549010506400 D2549010506800 D2549010507000 D2549010507200 D2549010507600 D2549010507800 D2549010508200 D2549010508600 D2549010508800 D2549010509200 D2549010512600 D2549010601800 D2549020500000 D2549020500400 D2549020500600 D2549020500800 D2549020501200 D2549020501400 D2549020501600 D2549020501800 D2549020502000 D2549020502400 D2549020502600 D2549020502800 D2549020503200 D2549020503400 D2549020503600 D2549020503800 D2549020504200 D2549020504400 D2549020504600 D2549020504800 D2549020505000 D2549020505200 D2549020505400 D2549020505800 D2549020506000 D2549020600200 D2549020600400 D2549020600800 D2549020601000 D2549020601400 D2549020601800 D2549020602000 D2549020602600 D2549020603000 D2549020603400 D2549020603600 D2549020603800 D2549020604000 D2549020606400 D2549020606600 D2549020607200 D2549030500200 D2549030500600 D2549030501000 D2549030501400 D2549030501600 D2549030501800 D2549030502200 D2549030502400 D2549030502600 D2549030503000 D2549030503200 D2549030503400 D2549030503600 D2549030509000 R225401115-002 R225401128-000 R225401145-000 R225401146-000 R225401146-002 R225401188-006

100. Removal of the Floor Pan

A. General

A complete disassembly of the component is not necessary and not recommended.

Do not disassemble the component more than it is necessary for:

- Cleaning
- Visual Inspection
- Replacement of defective parts.

B. Job Set-up Information
(1) Consumable Materials

REFERENCE	DESIGNATION
	Scotch Grip 847

Table 3434
Consumable Materials

C. Procedure

WARNING: **BE CAREFUL WHEN YOU USE SOLVENTS/CLEANING AGENTS, SEALANTS AND OTHER MATERIALS. OBEY THE MATERIAL MANUFACTURER'S INSTRUCTIONS AND THE LOCAL REGULATIONS. MAKE SURE THAT THERE IS A GOOD FLOW OF AIR THROUGH THE WORK AREA. DO NOT BREATHE THE FUMES. DO NOT SMOKE. DO NOT USE THESE MATERIALS NEAR A FLAME, SPARKS OR SOURCES OF HEAT. USE PROTECTIVE CLOTHING, GOGGLES AND GLOVES. IF YOU GET ONE OF THESE MATERIALS ON YOUR SKIN OR IN YOUR EYES, FLUSH IT AWAY WITH A FLOW OF CLEAN WATER. IF YOU GET ONE OF THESE MATERIALS IN YOUR MOUTH, GET IMMEDIATE MEDICAL AID. IN GENERAL, THESE MATERIALS ARE POISONOUS, FLAMMABLE AND SKIN IRRITANTS.**

CAUTION: **DO ALL THE WORK ON A CLEAN, SOFT SURFACE TO PREVENT DAMAGE TO THE COMPONENTS.**

SUB TASK 25-41-51-000-142-A01
D2549010500000 D2549010500800 D2549010501200 D2549010502600
D2549010503800 D2549010506000 D2549010507600 D2549020603600
D2549020604000 D2549030500600 D2549030501400 D2549030503000

1. Removal of the Floor Pan (13-1)

NOTE: **See TABLE 3435 for the references for the replacement procedures of permanent installed parts.**

More data for bonded parts are given in column SEE REPAIR TASK/SPM REFERENCE. Use the data for the selection of the related repair solution.

IPL FIG. ITEM	COMPONENT PART NAME	IPL FIG. ITEM	REPLACEMENT PART NAME	SEE REPAIR TASK/ SPM REFERENCE
13-001 13-010	Floor Pan Floor Pan Assembly	13-060	Non Textile Floor-Covering	Replacement of the Bonded Parts Material No. Scotch Grip 847
13-001 13-010	Floor Pan Floor Pan Assembly	13-083	Insert	25-00-01

Table 3435
Reference list for the replacement of permanent installed parts

(a) Remove the screws 13-090, 13-100, the washers 13-110, 13-120 and the floor pan assembly 13-010 from the lavatory structure.

(b) Disassemble the floor pan assembly 13-010 as follows:

1 Remove the screws 13-030, 13-105, the washers 13-040, the nuts 13-050 and the flap assemblies 13-020 from the floor pan assembly 13-010.

SUB TASK 25-41-51-000-142-B01

D2547161903000 D2549010500400 D2549010500600 D2549010501400
D2549010501600 D2549010501800 D2549010502200 D2549010502800
D2549010503200 D2549010503400 D2549010503600 D2549010504600
D2549010505000 D2549010505200 D2549010505400 D2549010505600
D2549010505800 D2549010506200 D2549010506400 D2549010506800
D2549010507000 D2549010507200 D2549010507800 D2549010508200
D2549010508600 D2549010508800 D2549010509200 D2549010512600
D2549010601800 D2549020500000 D2549020500400 D2549020500600
D2549020500800 D2549020501200 D2549020501400 D2549020501600
D2549020501800 D2549020502000 D2549020502400 D2549020502600
D2549020502800 D2549020503200 D2549020503400 D2549020503600
D2549020503800 D2549020504200 D2549020504400 D2549020504600
D2549020504800 D2549020505000 D2549020505200 D2549020505400
D2549020505800 D2549020506000 D2549020600200 D2549020600400

D2549020600800 D2549020601000 D2549020601400 D2549020601800 D2549020602000 D2549020602600 D2549020603000 D2549020603400 D2549020603800 D2549020606400 D2549020606600 D2549020607200 D2549030500200 D2549030501000 D2549030501600 D2549030501800 D2549030502200 D2549030502400 D2549030502600 D2549030503200 D2549030503400 D2549030503600 D2549030509000 R225401115-002 R225401128-000 R225401145-000 R225401146-000 R225401146-002 R225401188-006

2. Removal of the Floor Pan (13-1)

NOTE: **See TABLE 3436 for the references for the replacement procedures of permanent installed parts.**

More data for bonded parts are given in column SEE REPAIR TASK/SPM REFERENCE. Use the data for the selection of the related repair solution.

IPL FIG. ITEM	COMPONENT PART NAME	IPL FIG. ITEM	REPLACEMENT PART NAME	SEE REPAIR TASK/ SPM REFERENCE
13-001 13-010	Floor Pan Floor Pan Assembly	13-060	Non Textile Floor-Covering	Replacement of the Bonded Parts Material No. Scotch Grip 847
13-001 13-010	Floor Pan Floor Pan Assembly	13-083	Insert	25-00-01

Table 3436
Reference list for the replacement of permanent installed parts

(a) Remove the screws 13-090, 13-100, the washers 13-110 and the floor pan assembly 13-010 from the lavatory structure.

(b) Disassemble the floor pan assembly 13-010 as follows:

1 Remove the screws 13-030, 13-105, the washers 13-040, the nuts 13-050 and the flap assemblies 13-020 from the floor pan assembly 13-010.

2 If necessary, remove the non-textile floor covering 13-060, the adhesive tape 13-063 and the sealant 13-066 from the floor pan assembly 13-010.

TASK 25-41-51-000-810-B01

D2549010508000 D2549010514400 D2549020602400 D2549020602800 D2549020604600 D2549020703200 D2549030500400 D2549030501200 D2549030514200 D2549030600600 D2549030605800 R225401134-000 R225401137-012 R225401139-000 R225401188-000 R225401188-002

101. Removal of the Floor Pan

A. General

A complete disassembly of the component is not necessary and not recommended.

Do not disassemble the component more than it is necessary for:

- Cleaning
- Visual Inspection
- Replacement of defective parts.

B. Job Set-up Information
(1) Consumable Materials

REFERENCE	DESIGNATION
	Scotch Grip 847

Table 3437
Consumable Materials

C. Procedure

WARNING: **BE CAREFUL WHEN YOU USE SOLVENTS/CLEANING AGENTS, SEALANTS AND OTHER MATERIALS. OBEY THE MATERIAL MANUFACTURER'S INSTRUCTIONS AND THE LOCAL REGULATIONS. MAKE SURE THAT THERE IS A GOOD FLOW OF AIR THROUGH THE WORK AREA. DO NOT BREATHE THE FUMES. DO NOT SMOKE. DO NOT USE THESE MATERIALS NEAR A FLAME, SPARKS OR SOURCES OF HEAT. USE PROTECTIVE CLOTHING, GOGGLES AND GLOVES. IF YOU GET ONE OF THESE MATERIALS ON YOUR SKIN OR IN YOUR EYES, FLUSH IT AWAY WITH A FLOW OF CLEAN WATER. IF YOU GET ONE OF THESE MATERIALS IN YOUR MOUTH, GET IMMEDIATE MEDICAL AID. IN GENERAL, THESE MATERIALS ARE POISONOUS, FLAMMABLE AND SKIN IRRITANTS.**

CAUTION: **DO ALL THE WORK ON A CLEAN, SOFT SURFACE TO PREVENT DAMAGE TO THE COMPONENTS.**

SUB TASK 25-41-51-000-143-A01

1. Removal of the Floor Pan (13A-1)

NOTE: **See TABLE 3438 for the references for the replacement procedures of permanent installed parts.**

More data for bonded parts are given in column SEE REPAIR TASK/SPM REFERENCE. Use the data for the selection of the related repair solution.

IPL FIG. ITEM	COMPONENT PART NAME	IPL FIG. ITEM	REPLACEMENT PART NAME	SEE REPAIR TASK/ SPM REFERENCE
13A-001 13A-010	Floor Pan Floor Pan Assembly	13A-060	Non Textile Floor-Covering	Replacement of the Bonded Parts Material No. Scotch Grip 847
13A-001 13A-010	Floor Pan Floor Pan Assembly	13A-083	Insert	SPM 25-00-01

Table 3438
Reference list for the replacement of permanent installed parts

(a) Remove the screws 13A-090, 13A-100, the washers 13A-110 and the floor pan assembly 13A-010 from the lavatory structure.

(b) Disassemble the floor pan assembly 13A-010 as follows:

1 Remove the screws 13A-030, the washers 13A-040, the nuts 13A-050 and the flap assemblies 13A-020 from the floor pan assembly 13A-010.

2 If necessary, remove the non-textile floor covering 13A-060, the adhesive tape 13A-063 and the sealant 13A-066 from the floor pan assembly 13A-010.

TASK 25-41-51-000-810-C01

D2549010504400 D2549010507400 D2549010509400 D2549010509600 D2549010509800 D2549010510000 D2549010510400 D2549010511400 D2549010511600 D2549010512000 D2549010512200 D2549010513400 D2549010600000 D2549010600400 D2549010602000 D2549010602200 D2549010602400 D2549010604000 D2549010604600 D2549010604800 D2549010606400 D2549020506400 D2549020506600 D2549020506800 D2549020507000 D2549020507200 D2549020507400 D2549020507600 D2549020507800 D2549020508200 D2549020508400 D2549020511200 D2549020512800 D2549020513600 D2549020604200 D2549020604400 D2549020605000 D2549020605200 D2549020605400 D2549020605600 D2549020605800 D2549020607800 D2549020608200 D2549020608400 D2549020608600 D2549020609400 D2549020610000 D2549020611200 D2549020611400 D2549020611800 D2549020612600 D2549020612800 D2549020613600 D2549020614000 D2549020614600 D2549020701000 D2549020701800 D2549020702600 D2549020704800 D2549020707000 D2549020707200 D2549020708400 D2549020708600 D2549030504600 D2549030504800 D2549030505400 D2549030505600 D2549030505800 D2549030506200 D2549030506600 D2549030506800 D2549030507800 D2549030508000 D2549030508800 D2549030509400 D2549030510400 D2549030510600 D2549030511400 D2549030513000 D2549030513800 D2549030514600 D2549030601800 D2549030602800 D2549030603800 D2549030604800 D2549030605600 D2549030607000 D2549030607400 R225401115-000 R225401134-002 R225401134-004 R225401134-006 R225401134-008 R225401134-010 R225401134-016 R225401134-018 R225401134-020 R225401134-022 R225401134-024 R225401136-016 R225401183-008 R225401603-000

102. Removal of the Floor Pan

A. General

A complete disassembly of the component is not necessary and not recommended.

Do not disassemble the component more than it is necessary for:

- Cleaning
- Visual Inspection
- Replacement of defective parts.

B. Job Set-up Information
(1) Consumable Materials

REFERENCE	DESIGNATION
	Scotch Grip 847

Table 3439
Consumable Materials

C. Procedure

WARNING: **BE CAREFUL WHEN YOU USE SOLVENTS/CLEANING AGENTS, SEALANTS AND OTHER MATERIALS. OBEY THE MATERIAL MANUFACTURER'S INSTRUCTIONS AND THE LOCAL REGULATIONS. MAKE SURE THAT THERE IS A GOOD FLOW OF AIR THROUGH THE WORK AREA. DO NOT BREATHE THE FUMES. DO NOT SMOKE. DO NOT USE THESE MATERIALS NEAR A FLAME, SPARKS OR SOURCES OF HEAT. USE PROTECTIVE CLOTHING, GOGGLES AND GLOVES. IF YOU GET ONE OF THESE MATERIALS ON YOUR SKIN OR IN YOUR EYES, FLUSH IT AWAY WITH A FLOW OF CLEAN WATER. IF YOU GET ONE OF THESE MATERIALS IN YOUR MOUTH, GET IMMEDIATE MEDICAL AID. IN GENERAL, THESE MATERIALS ARE POISONOUS, FLAMMABLE AND SKIN IRRITANTS.**

CAUTION: **DO ALL THE WORK ON A CLEAN, SOFT SURFACE TO PREVENT DAMAGE TO THE COMPONENTS.**

SUB TASK 25-41-51-000-145-A01
D2549010504400 D2549010507400 D2549010604000

1. Removal of the Floor Pan (13B-1)

NOTE: **See TABLE 3440 for the references for the replacement procedures of permanent installed parts.**

More data for bonded parts are given in column SEE REPAIR TASK. Use the data for the selection of the related repair solution.

IPL FIG. ITEM	COMPONENT PART NAME	IPL FIG. ITEM	REPLACEMENT PART NAME	SEE REPAIR TASK
13B-001 13B-010	Floor Pan Floor Pan Assembly	13B-060	Non Textile Floor-Covering	Replacement of the Bonded Parts Material No. Scotch Grip 847

Table 3440
Reference list for the replacement of permanent installed parts

(a) Remove the screws 13B-100, 13B-110, the washers 13B-120, 13B-130 and the floor pan assembly 13B-010 from the lavatory structure.

(b) Disassemble the floor pan assembly 13B-010 as follows:

1 Remove the screws 13B-030, the washers 13B-040, the nuts 13B-050 and the flap assemblies 13B-020 from the floor pan assembly 13B-010.

SUB TASK 25-41-51-000-145-B01
D2549010510000 D2549010602000 D2549010602200 D2549010604600
D2549020507800 D2549020605800 D2549020708400 D2549030504600

2. Removal of the Floor Pan (13B-1)

NOTE: **See TABLE 3441 for the references for the replacement procedures of permanent installed parts.**

More data for bonded parts are given in column SEE REPAIR TASK/SPM REFERENCE. Use the data for the selection of the related repair solution.

IPL FIG. ITEM	COMPONENT PART NAME	IPL FIG. ITEM	REPLACEMENT PART NAME	SEE REPAIR TASK/ SPM REFERENCE
13B-001 13B-010	Floor Pan Floor Pan Assembly	13B-060	Non Textile Floor-Covering	Replacement of the Bonded Parts Material No. Scotch Grip 847
13B-001 13B-010	Floor Pan Floor Pan Assembly	13B-065	PVC Tape	SPM 25-00-01

Table 3441
Reference list for the replacement of permanent installed parts

(a) Remove the screws 13B-100, 13B-110, the washers 13B-120, 13B-130 and the floor pan assembly 13B-010 from the lavatory structure.

(b) Disassemble the floor pan assembly 13B-010 as follows:

1 Remove the screws 13B-030, the washers 13B-040, the nuts 13B-050 and the flaps 13B-020 from the floor pan assembly 13B-010.

SUB TASK 25-41-51-000-145-C01

D2549010509400 D2549010509600 D2549010509800 D2549010510400
D2549010511400 D2549010511600 D2549010512000 D2549010512200
D2549010513400 D2549010600000 D2549010600400 D2549010602400
D2549010604800 D2549010606400 D2549020506400 D2549020506600
D2549020506800 D2549020507000 D2549020507200 D2549020507400
D2549020507600 D2549020508200 D2549020508400 D2549020511200
D2549020512800 D2549020513600 D2549020604200 D2549020604400
D2549020605000 D2549020605200 D2549020605400 D2549020605600
D2549020607800 D2549020608200 D2549020608400 D2549020608600
D2549020609400 D2549020610000 D2549020611200 D2549020611400
D2549020611800 D2549020612600 D2549020612800 D2549020613600
D2549020614000 D2549020614600 D2549020701000 D2549020701800
D2549020702600 D2549020704800 D2549020707000 D2549020707200
D2549020708600 D2549030504800 D2549030505400 D2549030505600

D2549030505800 D2549030506200 D2549030506600 D2549030506800
D2549030507800 D2549030508000 D2549030508800 D2549030509400
D2549030510400 D2549030510600 D2549030511400 D2549030513000
D2549030513800 D2549030514600 D2549030601800 D2549030602800
D2549030603800 D2549030604800 D2549030605600 D2549030607000
D2549030607400 R225401115-000 R225401134-002 R225401134-004 R225401134-006
R225401134-008 R225401134-010 R225401134-016 R225401134-018 R225401134-020
R225401134-022 R225401134-024 R225401136-016 R225401183-008 R225401603-000

3. Removal of the Floor Pan (13B-1)

NOTE: **See TABLE 3442 for the references for the replacement procedures of permanent installed parts.**

IPL FIG. ITEM	COMPONENT PART NAME	IPL FIG. ITEM	REPLACEMENT PART NAME	SEE REPAIR TASK
13B-001 13B-010	Floor Pan Floor Pan Assembly	13B-060	Non Textile Floor-Covering	Replacement of the Bonded Parts Material No. Scotch Grip 847

Table 3442
Reference list for the replacement of permanent installed parts

(a) Remove the screws 13B-100, 13B-110, the washers 13B-120 and the floor pan assembly 13B-010 from the lavatory structure.

(b) Disassemble the floor pan assembly 13B-010 as follows:

1 Remove the screws 13B-030, the washers 13B-040, the nuts 13B-050 and the flaps 13B-020 from the floor pan assembly 13B-010.

TASK 25-41-51-000-810-D01

D2549010510600 D2549010510800 D2549010511000 D2549010511800 D2549010512400
D2549010513000 D2549010513800 D2549010514000 D2549010514600 D2549010514800
D2549010600200 D2549010600600 D2549010601400 D2549010602600 D2549010602800
D2549010603000 D2549010603600 D2549010603800 D2549010604200 D2549010604400
D2549010605000 D2549010605800 D2549010608800 D2549010609600 D2549020508000
D2549020509200 D2549020510400 D2549020514200 D2549020514400 D2549020602200
D2549020604800 D2549020607400 D2549020607600 D2549020609000 D2549020609600
D2549020609800 D2549020610200 D2549020610400 D2549020610600 D2549020611000
D2549020611600 D2549020612200 D2549020612400 D2549020613200 D2549020613800
D2549020614400 D2549020700200 D2549020701200 D2549020701400 D2549020702000
D2549020702400 D2549020703600 D2549020703800 D2549020706200 D2549020706600
D2549020706800 D2549020708200 D2549020709000 D2549020711200 D2549020712200
D2549020712400 D2549020712800 D2549020713800 D2549020803800 D2549030403800
D2549030504200 D2549030505200 D2549030506400 D2549030507000 D2549030507600
D2549030508200 D2549030509200 D2549030509600 D2549030509800 D2549030511000
D2549030511800 D2549030512000 D2549030513200 D2549030513600 D2549030514800
D2549030600400 D2549030601000 D2549030602000 D2549030602600 D2549030605000
D2549030605200 D2549030606200 D2549030606600 D2549030609200 D2549030613600
R225401137-000 R225401137-002 R225401137-004 R225401137-006 R225401137-008
R225401137-010 R225401137-014 R225401145-002 R225401145-004 R225401145-008
R225401145-012 R225401145-014 R225401153-000 R225401172-000 R225401172-002
R225401172-004 R225401172-006 R225401172-008 R225401172-010 R225401172-012
R225401172-014 R225401175-000 R225401175-002 R225401176-000 R225401600-000
R225401600-002 R225401600-004 R225401619-000

103. Removal of the Floor Pan

A. General

A complete disassembly of the component is not necessary and not recommended.

Do not disassemble the component more than it is necessary for:

- Cleaning
- Visual Inspection
- Replacement of defective parts.

B. Job Set-up Information
(1) Consumable Materials

REFERENCE	DESIGNATION
	Scotch Grip 847

Table 3443
Consumable Materials

C. Procedure

WARNING: **BE CAREFUL WHEN YOU USE SOLVENTS/CLEANING AGENTS, SEALANTS AND OTHER MATERIALS. OBEY THE MATERIAL MANUFACTURER'S INSTRUCTIONS AND THE LOCAL REGULATIONS. MAKE SURE THAT THERE IS A GOOD FLOW OF AIR THROUGH THE WORK AREA. DO NOT BREATHE THE FUMES. DO NOT SMOKE. DO NOT USE THESE MATERIALS NEAR A FLAME, SPARKS OR SOURCES OF HEAT. USE PROTECTIVE CLOTHING, GOGGLES AND GLOVES. IF YOU GET ONE OF THESE MATERIALS ON YOUR SKIN OR IN YOUR EYES, FLUSH IT AWAY WITH A FLOW OF CLEAN WATER. IF YOU GET ONE OF THESE MATERIALS IN YOUR MOUTH, GET IMMEDIATE MEDICAL AID. IN GENERAL, THESE MATERIALS ARE POISONOUS, FLAMMABLE AND SKIN IRRITANTS.**

CAUTION: **DO ALL THE WORK ON A CLEAN, SOFT SURFACE TO PREVENT DAMAGE TO THE COMPONENTS.**

SUB TASK 25-41-51-000-146-A01

1. Removal of the Floor Pan (13C-1)

NOTE: **See TABLE 3444 for the references for the replacement procedures of permanent installed parts.**

More data for bonded parts are given in column SEE REPAIR TASK/SPM REFERENCE. Use the data for the selection of the related repair solution.

IPL FIG. ITEM	COMPONENT PART NAME	IPL FIG. ITEM	REPLACEMENT PART NAME	SEE REPAIR TASK/ SPM REFERENCE
13C-001 13C-010	Floor Pan Floor Pan Assembly	13C-060	Non Textile Floor-Covering	Replacement of the Bonded Parts Material No. Scotch Grip 847
13C-001 13C-010	Floor Pan Floor Pan Assembly	13C-080	Insert	SPM 25-00-01

Table 3444
Reference list for the replacement of permanent installed parts

(a) Remove the screws 13C-100, 13C-110, the washers 13C-120 and the floor pan assembly 13C-010 from the lavatory structure.

(b) Disassemble the floor pan assembly 13C-010 as follows:

1 Remove the screws 13C-030, the washers 13C-040, the nuts 13C-050 and the flaps 13C-020 from the floor pan assembly 13C-010.

2 If necessary, remove the non-textile floor covering 13C-060, the adhesive tape 13C-063 and the sealant 13C-066 from the floor pan assembly 13C-010.

TASK 25-41-51-000-810-E01

D2549010513600 D2549010600800 D2549010601200 D2549010603200 D2549010603400 D2549010606600 D2549010608200 D2549010609200 D2549020508600 D2549020508800 D2549020512000 D2549020513000 D2549020513200 D2549020514000 D2549020700000 D2549020701600 D2549020702200 D2549020703400 D2549020704000 D2549020704200 D2549020704400 D2549020705000 D2549020705200 D2549020705400 D2549020705800 D2549020707400 D2549020709600 D2549020709800 D2549020710200 D2549020710600 D2549020711000 D2549020711400 D2549020713200 D2549020714000 D2549020800600 D2549020801200 D2549020801600 D2549020802800 D2549020807000 D2549020808600 D2549020810200 D2549030400200 D2549030510800 D2549030511200 D2549030512400 D2549030512800 D2549030513400 D2549030514000 D2549030514400 D2549030601200 D2549030603400 D2549030605400 D2549030606800 D2549030607600 D2549030608600 D2549030609800 D2549030610400 D2549030611000 R225401136-000 R225401136-010 R225401136-020 R225401136-022 R225401142-000 R225401142-002 R225401152-000 R225401152-002 R225401152-004 R225401152-006 R225401195-000 R225401196-000 R225401196-002 R225401196-004 R225401196-006 R225401196-008 R225401196-034 R225401196-036 R225401196-038 R225401196-044 R225401196-046 R225401196-048 R225401196-050 R225401196-052 R225401196-054 R225401609-000 R225401618-000 R225401618-002

104. Removal of the Floor Pan

A. General

A complete disassembly of the component is not necessary and not recommended.

Do not disassemble the component more than it is necessary for:

- Cleaning
- Visual Inspection
- Replacement of defective parts.

B. Job Set-up Information
(1) Consumable Materials

REFERENCE	DESIGNATION
	Scotch Grip 847

Table 3445
Consumable Materials

C. Procedure

WARNING: **BE CAREFUL WHEN YOU USE SOLVENTS/CLEANING AGENTS, SEALANTS AND OTHER MATERIALS. OBEY THE MATERIAL MANUFACTURER'S INSTRUCTIONS AND THE LOCAL REGULATIONS. MAKE SURE THAT THERE IS A GOOD FLOW OF AIR THROUGH THE WORK AREA. DO NOT BREATHE THE FUMES. DO NOT SMOKE. DO NOT USE THESE MATERIALS NEAR A FLAME, SPARKS OR SOURCES OF HEAT. USE PROTECTIVE CLOTHING, GOGGLES AND GLOVES. IF YOU GET ONE OF THESE MATERIALS ON YOUR SKIN OR IN YOUR EYES, FLUSH IT AWAY WITH A FLOW OF CLEAN WATER. IF YOU GET ONE OF THESE MATERIALS IN YOUR MOUTH, GET IMMEDIATE MEDICAL AID. IN GENERAL, THESE MATERIALS ARE POISONOUS, FLAMMABLE AND SKIN IRRITANTS.**

CAUTION: **DO ALL THE WORK ON A CLEAN, SOFT SURFACE TO PREVENT DAMAGE TO THE COMPONENTS.**

SUB TASK 25-41-51-000-148-A01

D2549010513600 D2549010600800 D2549010601200 D2549010603200 D2549010603400 D2549010606600 D2549010608200 D2549010609200 D2549020508600 D2549020508800 D2549020512000 D2549020513000 D2549020513200 D2549020514000 D2549020700000 D2549020701600 D2549020702200 D2549020703400 D2549020704000 D2549020704200 D2549020704400 D2549020705000 D2549020705200 D2549020705400 D2549020705800 D2549020707400 D2549020709600 D2549020709800 D2549020710200 D2549020710600 D2549020711000 D2549020711400 D2549020713200 D2549020800600 D2549020801200 D2549020801600 D2549020802800 D2549020808600 D2549020810200 D2549030400200 D2549030510800 D2549030511200 D2549030512400 D2549030512800 D2549030513400 D2549030514000 D2549030514400 D2549030601200 D2549030603400 D2549030605400 D2549030606800 D2549030607600 D2549030608600 D2549030609800 D2549030610400 D2549030611000 R225401136-000 R225401136-010 R225401136-020 R225401136-022 R225401142-000 R225401152-000 R225401152-002 R225401152-004 R225401152-006 R225401195-000 R225401196-000 R225401196-002 R225401196-004 R225401196-006 R225401196-008 R225401196-034 R225401196-036 R225401196-038 R225401196-044 R225401196-046 R225401196-048 R225401196-050 R225401196-052 R225401196-054 R225401618-000 R225401618-002

1. Removal of the Floor Pan (13D-1)

NOTE: **See TABLE 3446 for the references for the replacement procedures of permanent installed parts.**

More data for bonded parts are given in column SEE REPAIR TASK/SPM REFERENCE. Use the data for the selection of the related repair solution.

IPL FIG. ITEM	COMPONENT PART NAME	IPL FIG. ITEM	REPLACEMENT PART NAME	SEE REPAIR TASK/ SPM REFERENCE
13D-001 13D-010	Floor Pan Floor Pan Assembly	13D-060	Non Textile Floor-Covering	Replacement of the Bonded Parts Material No. Scotch Grip 847
13D-001 13D-010	Floor Pan Floor Pan Assembly	13D-080	Insert	SPM 25-00-01

Table 3446
Reference list for the replacement of permanent installed parts

(a) Remove the screws 13D-100, 13D-110, the washers 13D-120 and the floor pan assembly 13D-010 from the lavatory structure.

(b) Disassemble the floor pan assembly 13D-010 as follows:

1 Remove the screws 13D-030, the washers 13D-040, the nuts 13D-050 and the flaps 13D-020 from the floor pan assembly 13D-010.

2 If necessary, remove the non-textile floor covering 13D-060, the adhesive tape 13D-065 and the sealant 13D-062 from the floor pan assembly 13D-010.

SUB TASK 25-41-51-000-148-B01
D2549020714000 D2549020807000 R225401609-000

2. Removal of the Floor Pan (13D-1)

NOTE: **See TABLE 3447 for the references for the replacement procedures of permanent installed parts.**

More data for bonded parts are given in column SEE REPAIR TASK/SPM REFERENCE. Use the data for the selection of the related repair solution.

IPL FIG. ITEM	COMPONENT PART NAME	IPL FIG. ITEM	REPLACEMENT PART NAME	SEE REPAIR TASK/ SPM REFERENCE
13D-001 13D-010	Floor Pan Floor Pan Assembly	13D-060	Non Textile Floor-Covering	Replacement of the Bonded Parts Material No. Scotch Grip 847
13D-001 13D-010	Floor Pan Floor Pan Assembly	13D-080	Insert	SPM 25-00-01

Table 3447
Reference list for the replacement of permanent installed parts

(a) Remove the screws 13D-100, 13D-110, the washers 13D-120 and the floor pan assembly 13D-010 from the lavatory structure.

(b) Disassemble the floor pan assembly 13D-010 as follows:

1 Remove the screws 13D-030, the washers 13D-040 and the nuts 13D-050 from the floor pan assembly 13D-010.

TASK 25-41-51-000-810-F01

D2549010605200 D2549010605600 D2549010607600 D2549010611800 D2549020502200 D2549020509000 D2549020509600 D2549020509800 D2549020511800 D2549020709400 D2549020710000 D2549020710800 D2549020713400 D2549020713600 D2549020714400 D2549020714600 D2549020803200 D2549020809000 D2549030403000 D2549030602400 D2549030604200 D2549030607200 D2549030608400 D2549030608800 D2549030609000 D2549030610000 R225401199-002 R225401199-004 R225401199-008 R225401605-000 R225401605-002 R225401613-000 R225401693-000

105. Removal of the Floor Pan

A. General

A complete disassembly of the component is not necessary and not recommended.

Do not disassemble the component more than it is necessary for:

- Cleaning
- Visual Inspection
- Replacement of defective parts.

B. Job Set-up Information
(1) Consumable Materials

REFERENCE	DESIGNATION
	Scotch Grip 847

Table 3448
Consumable Materials

C. Procedure

WARNING: **BE CAREFUL WHEN YOU USE SOLVENTS/CLEANING AGENTS, SEALANTS AND OTHER MATERIALS. OBEY THE MATERIAL MANUFACTURER'S INSTRUCTIONS AND THE LOCAL REGULATIONS. MAKE SURE THAT THERE IS A GOOD FLOW OF AIR THROUGH THE WORK AREA. DO NOT BREATHE THE FUMES. DO NOT SMOKE. DO NOT USE THESE MATERIALS NEAR A FLAME, SPARKS OR SOURCES OF HEAT. USE PROTECTIVE CLOTHING, GOGGLES AND GLOVES. IF YOU GET ONE OF THESE MATERIALS ON YOUR SKIN OR IN YOUR EYES, FLUSH IT AWAY WITH A FLOW OF CLEAN WATER. IF YOU GET ONE OF THESE MATERIALS IN YOUR MOUTH, GET IMMEDIATE MEDICAL AID. IN GENERAL, THESE MATERIALS ARE POISONOUS, FLAMMABLE AND SKIN IRRITANTS.**

CAUTION: **DO ALL THE WORK ON A CLEAN, SOFT SURFACE TO PREVENT DAMAGE TO THE COMPONENTS.**

SUB TASK 25-41-51-000-149-A01

1. Removal of the Floor Pan (13E-1)

NOTE: **See TABLE 3449 for the references for the replacement procedures of permanent installed parts.**

More data for bonded parts are given in column SEE REPAIR TASK. Use the data for the selection of the related repair solution.

IPL FIG. ITEM	COMPONENT PART NAME	IPL FIG. ITEM	REPLACEMENT PART NAME	SEE REPAIR TASK/ SPM REFERENCE
13E-001 13E-010	Floor Pan Floor Pan Assembly	13E-060	Non Textile Floor-Covering	Replacement of the Bonded Parts Material No. Scotch Grip 847
13E-001 13E-010	Floor Pan Floor Pan Assembly	13E-080	Insert	SPM 25-00-01

Table 3449
Reference list for the replacement of permanent installed parts

(a) Remove the screws 13E-100, 13E-110, the washers 13E-120 and the floor pan assembly 13E-010 from the lavatory structure.

(b) Disassemble the floor pan assembly 13E-010 as follows:

1 Remove the screws 13E-030, the washers 13E-040, the nuts 13E-050 and the flaps 13E-020 from the floor pan assembly 13E-010.

2 If necessary, remove the non-textile floor covering 13E-060, the adhesive tape 13E-063 and the sealant 13E-066 from the floor pan assembly 13E-010.

TASK 25-41-51-000-810-G01
D2549020712000 D2549020712600

106. Removal of the Floor Pan

A. General

A complete disassembly of the component is not necessary and not recommended.

Do not disassemble the component more than it is necessary for:

- Cleaning
- Visual Inspection
- Replacement of defective parts.

B. Job Set-up Information
(1) Consumable Materials

REFERENCE	DESIGNATION
	Scotch Grip 847

Table 3450
Consumable Materials

C. Procedure

WARNING: **BE CAREFUL WHEN YOU USE SOLVENTS/CLEANING AGENTS, SEALANTS AND OTHER MATERIALS. OBEY THE MATERIAL MANUFACTURER'S INSTRUCTIONS AND THE LOCAL REGULATIONS. MAKE SURE THAT THERE IS A GOOD FLOW OF AIR THROUGH THE WORK AREA. DO NOT BREATHE THE FUMES. DO NOT SMOKE. DO NOT USE THESE MATERIALS NEAR A FLAME, SPARKS OR SOURCES OF HEAT. USE PROTECTIVE CLOTHING, GOGGLES AND GLOVES. IF YOU GET ONE OF THESE MATERIALS ON YOUR SKIN OR IN YOUR EYES, FLUSH IT AWAY WITH A FLOW OF CLEAN WATER. IF YOU GET ONE OF THESE MATERIALS IN YOUR MOUTH, GET IMMEDIATE MEDICAL AID. IN GENERAL, THESE MATERIALS ARE POISONOUS, FLAMMABLE AND SKIN IRRITANTS.**

CAUTION: **DO ALL THE WORK ON A CLEAN, SOFT SURFACE TO PREVENT DAMAGE TO THE COMPONENTS.**

SUB TASK 25-41-51-000-150-A01

1. Removal of the Floor Pan (13F-1)

NOTE: **See TABLE 3451 for the references for the replacement procedures of permanent installed parts.**

More data for bonded parts are given in column SEE REPAIR TASK/SPM REFERENCE. Use the data for the selection of the related repair solution.

IPL FIG. ITEM	COMPONENT PART NAME	IPL FIG. ITEM	REPLACEMENT PART NAME	SEE REPAIR TASK/ SPM REFERENCE
13F-001 13F-010	Floor Pan Floor Pan Assembly	13F-060	Non Textile Floor-Covering	Replacement of the Bonded Parts Material No. Scotch Grip 847
13F-001 13F-010	Floor Pan Floor Pan Assembly	13F-070	PVC Tape	SPM 25-00-01
13F-001 13F-010	Floor Pan Floor Pan Assembly	13F-090	Insert	SPM 25-00-01

Table 3451
Reference list for the replacement of permanent installed parts

(a) Remove the screws 13F-170 and the floor covering assembly 13F-150 from the L-angle 13F-160 and from the lavatory structure.

(b) Remove the screws 13F-170 and the L-angle 13F-160 from the floor pan assembly 13F-140.

(c) Remove the screws 13F-230, the washers 13F-240 and the belt 13F-220 from the floor pan assembly 13F-140.

(d) Remove the screws 13F-180, 13F-190, the filler assembly 13F-200 and the floor pan assembly 13F-140 from the floor pan assembly 13F-010 and from the lavatory structure.

(e) Remove the screws 13F-110, 13F-120, the washers 13F-130 and the floor pan assembly 13F-010 from the lavatory structure.

(f) Disassemble the floor pan assembly 13F-010 as follows:

1 Remove the screws 13F-030, the washers 13F-040, the nuts 13F-050 and the flaps 13F-020 from the floor pan assembly 13F-010.

TASK 25-41-51-000-810-H01
D2549010606800 D2549010607000 D2549010608400 D2549010608600 D2549010609800 D2549010612200 D2549020708000 D2549020802200 D2549020803400 D2549020803600 D2549020804000 D2549030400400 D2549030402600 D2549030402800 D2549030503800 D2549030608000 D2549030612400 D2549030614600 R225401614-000

107. Removal of the Floor Pan

A. General

A complete disassembly of the component is not necessary and not recommended.

Do not disassemble the component more than it is necessary for:

- Cleaning
- Visual Inspection
- Replacement of defective parts.

B. Job Set-up Information
(1) Consumable Materials

REFERENCE	DESIGNATION
	Scotch Grip 847

Table 3452
Consumable Materials

C. Procedure

WARNING: **BE CAREFUL WHEN YOU USE SOLVENTS/CLEANING AGENTS, SEALANTS AND OTHER MATERIALS. OBEY THE MATERIAL MANUFACTURER'S INSTRUCTIONS AND THE LOCAL REGULATIONS. MAKE SURE THAT THERE IS A GOOD FLOW OF AIR THROUGH THE WORK AREA. DO NOT BREATHE THE FUMES. DO NOT SMOKE. DO NOT USE THESE MATERIALS NEAR A FLAME, SPARKS OR SOURCES OF HEAT. USE PROTECTIVE CLOTHING, GOGGLES AND GLOVES. IF YOU GET ONE OF THESE MATERIALS ON YOUR SKIN OR IN YOUR EYES, FLUSH IT AWAY WITH A FLOW OF CLEAN WATER. IF YOU GET ONE OF THESE MATERIALS IN YOUR MOUTH, GET IMMEDIATE MEDICAL AID. IN GENERAL, THESE MATERIALS ARE POISONOUS, FLAMMABLE AND SKIN IRRITANTS.**

CAUTION: **DO ALL THE WORK ON A CLEAN, SOFT SURFACE TO PREVENT DAMAGE TO THE COMPONENTS.**

SUB TASK 25-41-51-000-151-A01

D2549010606800 D2549010607000 D2549010608400 D2549010608600 D2549010609800 D2549010612200 D2549020708000 D2549020802200 D2549020803400 D2549020803600 D2549020804000 D2549030400400 D2549030402600 D2549030503800 D2549030608000 D2549030614600 R225401614-000

1. Removal of the Floor Pan (13G-1)

NOTE: **See TABLE 3453 for the references for the replacement procedures of permanent installed parts.**

More data for bonded parts are given in column SEE REPAIR TASK/SPM REFERENCE. Use the data for the selection of the related repair solution.

IPL FIG. ITEM	COMPONENT PART NAME	IPL FIG. ITEM	REPLACEMENT PART NAME	SEE REPAIR TASK/ SPM REFERENCE
13G-001 13G-010	Floor Pan Floor Pan Assembly	13G-060	Non Textile Floor-Covering	Replacement of the Bonded Parts Material No. Scotch Grip 847
13G-001 13G-010	Floor Pan Floor Pan Assembly	13G-080	Insert	SPM 25-00-01

Table 3453
Reference list for the replacement of permanent installed parts

(a) Remove the screws 13G-100, 13G-110, the washers 13G-120, 13G-130 and the floor pan assembly 13G-010 from the lavatory structure.

(b) Disassemble the floor pan assembly 13G-010 as follows:

1 Remove the screws 13G-030, the washers 13G-040, the nuts 13G-050 and the flaps 13G-020 from the floor pan assembly 13G-010.

2 If necessary, remove the non-textile floor covering 13G-060, the adhesive tape 13G-063 and the sealant 13G-066 from the floor pan assembly 13G-010.

SUB TASK 25-41-51-000-151-B01
D2549030402800 D2549030612400

2. Removal of the Floor Pan (13G-1)

NOTE: **See TABLE 3454 for the references for the replacement procedures of permanent installed parts.**

IPL FIG. ITEM	COMPONENT PART NAME	IPL FIG. ITEM	REPLACEMENT PART NAME	SEE REPAIR TASK/ SPM REFERENCE
13G-001 13G-010	Floor Pan Floor Pan Assembly	13G-080	Insert	SPM 25-00-01

Table 3454
Reference list for the replacement of permanent installed parts

(a) Remove the screws 13G-100, 13G-110, the washers 13G-120, 13G-130 and the floor pan assembly 13G-010 from the lavatory structure.

(b) Disassemble the floor pan assembly 13G-010 as follows:

1 Remove the screws 13G-030, the washers 13G-040, the nuts 13G-050 and the flaps 13G-020 from the floor pan assembly 13G-010.

TASK 25-41-51-000-810-J01

D2549010607200 D2549010607800 D2549010609400 D2549010610200 D2549010610400 D2549010611000 D2549020505600 D2549020510800 D2549020511000 D2549020512200 D2549020512400 D2549020512600 D2549020513400 D2549020514600 D2549020700800 D2549020711600 D2549020800200 D2549020800400 D2549020800800 D2549020801000 D2549020801400 D2549020803000 D2549020809400 D2549030400000 D2549030403400 D2549030403600 D2549030404400 D2549030507200 D2549030507400 D2549030508600 D2549030510200 D2549030600800 D2549030601600 D2549030603200 D2549030603600 D2549030607800 D2549030610600 D2549030611200 D2549030611400 D2549030611600 D2549030611800 D2549030612200 D2549030612600 D2549030612800 D2549030613200 D2549030613400 D2549030613800 D2549030614200 D2549030614400 D2549030614800 R225401134-012 R225401134-026 R225401134-028 R225401134-030 R225401137-016 R225401145-006 R225401168-000 R225401168-002 R225401168-004 R225401168-006 R225401168-008 R225401168-014 R225401168-016 R225401168-018 R225401168-020 R225401168-022 R225401168-024 R225401168-028 R225401172-016 R225401172-018 R225401183-000 R225401183-002 R225401199-006 R225401619-002 R225401622-000 R225401625-000

108. Removal of the Floor Pan

A. General

A complete disassembly of the component is not necessary and not recommended.

Do not disassemble the component more than it is necessary for:

- Cleaning
- Visual Inspection
- Replacement of defective parts.

B. Job Set-up Information
(1) Consumable Materials

REFERENCE	DESIGNATION
	Scotch Grip 847

Table 3455
Consumable Materials

C. Procedure

WARNING: **BE CAREFUL WHEN YOU USE SOLVENTS/CLEANING AGENTS, SEALANTS AND OTHER MATERIALS. OBEY THE MATERIAL MANUFACTURER'S INSTRUCTIONS AND THE LOCAL REGULATIONS. MAKE SURE THAT THERE IS A GOOD FLOW OF AIR THROUGH THE WORK AREA. DO NOT BREATHE THE FUMES. DO NOT SMOKE. DO NOT USE THESE MATERIALS NEAR A FLAME, SPARKS OR SOURCES OF HEAT. USE PROTECTIVE CLOTHING, GOGGLES AND GLOVES. IF YOU GET ONE OF THESE MATERIALS ON YOUR SKIN OR IN YOUR EYES, FLUSH IT AWAY WITH A FLOW OF CLEAN WATER. IF YOU GET ONE OF THESE MATERIALS IN YOUR MOUTH, GET IMMEDIATE MEDICAL AID. IN GENERAL, THESE MATERIALS ARE POISONOUS, FLAMMABLE AND SKIN IRRITANTS.**

CAUTION: **DO ALL THE WORK ON A CLEAN, SOFT SURFACE TO PREVENT DAMAGE TO THE COMPONENTS.**

SUB TASK 25-41-51-000-152-A01

1. Removal of the Floor Pan (13H-1)

NOTE: **See TABLE 3456 for the references for the replacement procedures of permanent installed parts.**

More data for bonded parts are given in column SEE REPAIR TASK/SPM REFERENCE. Use the data for the selection of the related repair solution.

IPL FIG. ITEM	COMPONENT PART NAME	IPL FIG. ITEM	REPLACEMENT PART NAME	SEE REPAIR TASK/ SPM REFERENCE
13H-001 13H-010	Floor Pan Floor Pan Assembly	13H-060	Non Textile Floor-Covering	Replacement of the Bonded Parts Material No. Scotch Grip 847
13H-001 13H-010	Floor Pan Floor Pan Assembly	13H-080	Insert	SPM 25-00-01

Table 3456
Reference list for the replacement of permanent installed parts

(a) Remove the screws 13H-100, 13H-120, the washers 13H-110, 13H-130 and the floor pan assembly 13H-010 from the lavatory structure.

(b) Disassemble the floor pan assembly 13H-010 as follows:

1 Remove the screws 13H-030, the washers 13H-040, the nuts 13H-050 and the flaps 13H-020 from the floor pan assembly 13H-010.

2 If necessary, remove the non-textile floor covering 13H-060, the adhesive tape 13H-063 and the sealant 13H-066 from the floor pan assembly 13H-010.

TASK 25-41-51-000-810-K01

D2549010403000 D2549010613000 D2549010614200 D2549020400200 D2549020405000 D2549020405600 D2549020406200 D2549020510600 D2549020613000 D2549020805800 D2549020806000 D2549020806200 D2549020806800 D2549020807400 D2549020807600 D2549020807800 D2549020808800 D2549020810000 D2549020810600 D2549020810800 D2549020811200 D2549020811400 D2549020811800 D2549020812200 D2549020812600 D2549020813800 D2549020814400 D2549020814800 D2549030401000 D2549030402000 D2549030402200 D2549030402400 D2549030404200 D2549030404600 D2549030404800 D2549030405200 D2549030405400 D2549030405800 D2549030406400 D2549030406600 D2549030407000 D2549030407200 D2549030407600 D2549030408000 D2549030408400 D2549030410400 R225401134-032 R225401134-034 R225401134-036 R225401136-004 R225401136-018 R225401152-008 R225401168-010 R225401168-012 R225401168-026 R225401196-010 R225401196-012 R225401196-014 R225401196-016 R225401196-040 R225401196-056 R225401196-058 R225401196-060 R225401196-062 R225401611-006 R225401611-012 R225401643-000 R225401646-000 R225401647-000 R225401648-000 R225401648-002 R225401656-000 R225401656-002 R225401662-000 R225401662-002

109. Removal of the Floor Pan

A. General

A complete disassembly of the component is not necessary and not recommended.

Do not disassemble the component more than it is necessary for:

- Cleaning
- Visual Inspection
- Replacement of defective parts.

B. Job Set-up Information
(1) Consumable Materials

REFERENCE	DESIGNATION
	Scotch Grip 847

Table 3457
Consumable Materials

C. Procedure

WARNING: **BE CAREFUL WHEN YOU USE SOLVENTS/CLEANING AGENTS, SEALANTS AND OTHER MATERIALS. OBEY THE MATERIAL MANUFACTURER'S INSTRUCTIONS AND THE LOCAL REGULATIONS. MAKE SURE THAT THERE IS A GOOD FLOW OF AIR THROUGH THE WORK AREA. DO NOT BREATHE THE FUMES. DO NOT SMOKE. DO NOT USE THESE MATERIALS NEAR A FLAME, SPARKS OR SOURCES OF HEAT. USE PROTECTIVE CLOTHING, GOGGLES AND GLOVES. IF YOU GET ONE OF THESE MATERIALS ON YOUR SKIN OR IN YOUR EYES, FLUSH IT AWAY WITH A FLOW OF CLEAN WATER. IF YOU GET ONE OF THESE MATERIALS IN YOUR MOUTH, GET IMMEDIATE MEDICAL AID. IN GENERAL, THESE MATERIALS ARE POISONOUS, FLAMMABLE AND SKIN IRRITANTS.**

CAUTION: **DO ALL THE WORK ON A CLEAN, SOFT SURFACE TO PREVENT DAMAGE TO THE COMPONENTS.**

SUB TASK 25-41-51-000-153-A01

1. Removal of the Floor Pan (13J-1)

NOTE: **See TABLE 3458 for the references for the replacement procedures of permanent installed parts.**

More data for bonded parts are given in column SEE REPAIR TASK/SPM REFERENCE. Use the data for the selection of the related repair solution.

IPL FIG. ITEM	COMPONENT PART NAME	IPL FIG. ITEM	REPLACEMENT PART NAME	SEE REPAIR TASK/ SPM REFERENCE
13J-001 13J-010	Floor Pan Floor Pan Assembly	13J-060	Non Textile Floor-Covering	Replacement of the Bonded Parts Material No. Scotch Grip 847
13J-001 13J-010	Floor Pan Floor Pan Assembly	13J-080	Insert	SPM 25-00-01

Table 3458
Reference list for the replacement of permanent installed parts

(a) Remove the screws 13J-100, 13J-120, the washers 13J-110, 13J-130 and the floor pan assembly 13J-010 from the lavatory structure.

(b) Disassemble the floor pan assembly 13J-010 as follows:

1 Remove the screws 13J-030, the washers 13J-040, the nuts 13J-050 and the flaps 13J-020 from the floor pan assembly 13J-010.

2 Remove the adhesive tape 13J-64, the sealant 13J-62 and the non textile floor-covering 13J-60.

TASK 25-41-51-000-810-L01

D2549010400200 D2549010400400 D2549010400600 D2549010610800 D2549010611200 D2549010612400 D2549010612600 D2549010613200 D2549010613400 D2549010614400 D2549010614800 D2549020404200 D2549020404400 D2549020405200 D2549020513800 D2549020804200 D2549020804800 D2549020805400 D2549020811600 D2549020812000 D2549020812400 D2549020812800 D2549020814000 D2549020814600 D2549030400600 D2549030401200 D2549030401800 D2549030404000 D2549030405000 D2549030406800 D2549030407800 D2549030409800 R225401145-010 R225401622-002

110. Removal of the Floor Pan

A. General

A complete disassembly of the component is not necessary and not recommended.

Do not disassemble the component more than it is necessary for:

- Cleaning
- Visual Inspection
- Replacement of defective parts.

B. Job Set-up Information
(1) Consumable Materials

REFERENCE	DESIGNATION
	Scotch Grip 847

Table 3459
Consumable Materials

C. Procedure

WARNING: **BE CAREFUL WHEN YOU USE SOLVENTS/CLEANING AGENTS, SEALANTS AND OTHER MATERIALS. OBEY THE MATERIAL MANUFACTURER'S INSTRUCTIONS AND THE LOCAL REGULATIONS. MAKE SURE THAT THERE IS A GOOD FLOW OF AIR THROUGH THE WORK AREA. DO NOT BREATHE THE FUMES. DO NOT SMOKE. DO NOT USE THESE MATERIALS NEAR A FLAME, SPARKS OR SOURCES OF HEAT. USE PROTECTIVE CLOTHING, GOGGLES AND GLOVES. IF YOU GET ONE OF THESE MATERIALS ON YOUR SKIN OR IN YOUR EYES, FLUSH IT AWAY WITH A FLOW OF CLEAN WATER. IF YOU GET ONE OF THESE MATERIALS IN YOUR MOUTH, GET IMMEDIATE MEDICAL AID. IN GENERAL, THESE MATERIALS ARE POISONOUS, FLAMMABLE AND SKIN IRRITANTS.**

CAUTION: **DO ALL THE WORK ON A CLEAN, SOFT SURFACE TO PREVENT DAMAGE TO THE COMPONENTS.**

SUB TASK 25-41-51-000-154-A01

D2549010400200 D2549010400400 D2549010400600 D2549010610800
D2549010611200 D2549010612400 D2549010612600 D2549010613200
D2549010613400 D2549010614400 D2549010614800 D2549020404200
D2549020404400 D2549020405200 D2549020513800 D2549020804200
D2549020804800 D2549020805400 D2549020811600 D2549020812000
D2549020812400 D2549020812800 D2549020814000 D2549020814600
D2549030400600 D2549030401800 D2549030404000 D2549030405000
D2549030406800 R225401145-010 R225401622-002

1. Removal of the Floor Pan (13K-1)

NOTE: **See TABLE 3460 for the references for the replacement procedures of permanent installed parts.**

More data for bonded parts are given in column SEE REPAIR TASK/SPM REFERENCE. Use the data for the selection of the related repair solution.

IPL FIG. ITEM	COMPONENT PART NAME	IPL FIG. ITEM	REPLACEMENT PART NAME	SEE REPAIR TASK/ SPM REFERENCE
13K-001 13K-010	Floor Pan Floor Pan Assembly	13K-060	Non Textile Floor-Covering	Replacement of the Bonded Parts Material No. Scotch Grip 847
13K-001 13K-010	Floor Pan Floor Pan Assembly	13K-080	Insert	SPM 25-00-01

Table 3460
Reference list for the replacement of permanent installed parts

(a) Remove the screws 13K-100, 13K-120, the washers 13K-110, 13K-130 and the floor pan assembly 13K-010 from the lavatory structure.

(b) Disassemble the floor pan assembly 13K-010 as follows:

1 Remove the screws 13K-030, the washers 13K-040, the nuts 13K-050 and the flaps 13K-020 from the floor pan assembly 13K-010.

SUB TASK 25-41-51-000-154-B01
D2549030401200 D2549030407800 D2549030409800

2. Removal of the Floor Pan (13K-1)

NOTE: **See TABLE 3461 for the references for the replacement procedures of permanent installed parts.**

IPL FIG. ITEM	COMPONENT PART NAME	IPL FIG. ITEM	REPLACEMENT PART NAME	SEE REPAIR TASK/ SPM REFERENCE
13K-001 13K-010	Floor Pan Floor Pan Assembly	13K-080	Insert	SPM 25-00-01

Table 3461
Reference list for the replacement of permanent installed parts

(a) Remove the screws 13K-100, 13K-120, the washers 13K-110, 13K-130 and the floor pan assembly 13K-010 from the lavatory structure.

(b) Disassemble the floor pan assembly 13K-010 as follows:

1 Remove the screws 13K-030, the washers 13K-040, the nuts 13K-050 and the flaps 13K-020 from the floor pan assembly 13K-010.

TASK 25-41-51-000-810-M01
D2549010611400 D2549020400400 D2549020404600 D2549020405400 D2549020405800 D2549020713000 D2549020801800 D2549020802400 D2549020806400 D2549020806600 D2549020810400 D2549020813000 D2549020813200 D2549020813400 D2549020813600 D2549030401600 D2549030406000 D2549030407400 D2549030408600 D2549030614000 D2549040500200 R225401199-000 R225401199-010 R225401639-000 R225401639-002 R225401643-002 R225401643-004

111. Removal of the Floor Pan

A. General

A complete disassembly of the component is not necessary and not recommended.

Do not disassemble the component more than it is necessary for:

- Cleaning
- Visual Inspection
- Replacement of defective parts.

B. Job Set-up Information
(1) Consumable Materials

REFERENCE	DESIGNATION
	Scotch Grip 847

Table 3462
Consumable Materials

C. Procedure

WARNING: **BE CAREFUL WHEN YOU USE SOLVENTS/CLEANING AGENTS, SEALANTS AND OTHER MATERIALS. OBEY THE MATERIAL MANUFACTURER'S INSTRUCTIONS AND THE LOCAL REGULATIONS. MAKE SURE THAT THERE IS A GOOD FLOW OF AIR THROUGH THE WORK AREA. DO NOT BREATHE THE FUMES. DO NOT SMOKE. DO NOT USE THESE MATERIALS NEAR A FLAME, SPARKS OR SOURCES OF HEAT. USE PROTECTIVE CLOTHING, GOGGLES AND GLOVES. IF YOU GET ONE OF THESE MATERIALS ON YOUR SKIN OR IN YOUR EYES, FLUSH IT AWAY WITH A FLOW OF CLEAN WATER. IF YOU GET ONE OF THESE MATERIALS IN YOUR MOUTH, GET IMMEDIATE MEDICAL AID. IN GENERAL, THESE MATERIALS ARE POISONOUS, FLAMMABLE AND SKIN IRRITANTS.**

CAUTION: **DO ALL THE WORK ON A CLEAN, SOFT SURFACE TO PREVENT DAMAGE TO THE COMPONENTS.**

SUB TASK 25-41-51-000-155-A01

1. Removal of the Floor Pan (13L-1)

NOTE: **See TABLE 3463 for the references for the replacement procedures of permanent installed parts.**

More data for bonded parts are given in column SEE REPAIR TASK. Use the data for the selection of the related repair solution.

IPL FIG. ITEM	COMPONENT PART NAME	IPL FIG. ITEM	REPLACEMENT PART NAME	SEE REPAIR TASK
13L-001 13L-010	Floor Pan Floor Pan Assembly	13L-060	Non Textile Floor-Covering	Replacement of the Bonded Parts Material No. Scotch Grip 847
13L-001 13L-010	Floor Pan Floor Pan Assembly	13L-080	Insert	SPM 25-00-01

Table 3463
Reference list for the replacement of permanent installed parts

(a) Remove the screws 13L-100, 13L-120, the washers 13L-110, 13L-130 and the floor pan assembly 13L-010 from the lavatory structure.

(b) Disassemble the floor pan assembly 13L-010 as follows:

1 Remove the screws 13L-030, the washers 13L-040, the nuts 13L-050 and the flaps 13L-020 from the floor pan assembly 13L-010.

TASK 25-41-51-000-810-N01
D2549010400800 D2549020400000 D2549020805200 D2549030408200 D2549040500600
R225401673-000

112. Removal of the Floor Pan

A. General

A complete disassembly of the component is not necessary and not recommended.

Do not disassemble the component more than it is necessary for:

- Cleaning
- Visual Inspection
- Replacement of defective parts.

B. Job Set-up Information
(1) Consumable Materials

REFERENCE	DESIGNATION
	Scotch Grip 847

Table 3464
Consumable Materials

C. Procedure

WARNING: **BE CAREFUL WHEN YOU USE SOLVENTS/CLEANING AGENTS, SEALANTS AND OTHER MATERIALS. OBEY THE MATERIAL MANUFACTURER'S INSTRUCTIONS AND THE LOCAL REGULATIONS. MAKE SURE THAT THERE IS A GOOD FLOW OF AIR THROUGH THE WORK AREA. DO NOT BREATHE THE FUMES. DO NOT SMOKE. DO NOT USE THESE MATERIALS NEAR A FLAME, SPARKS OR SOURCES OF HEAT. USE PROTECTIVE CLOTHING, GOGGLES AND GLOVES. IF YOU GET ONE OF THESE MATERIALS ON YOUR SKIN OR IN YOUR EYES, FLUSH IT AWAY WITH A FLOW OF CLEAN WATER. IF YOU GET ONE OF THESE MATERIALS IN YOUR MOUTH, GET IMMEDIATE MEDICAL AID. IN GENERAL, THESE MATERIALS ARE POISONOUS, FLAMMABLE AND SKIN IRRITANTS.**

CAUTION: **DO ALL THE WORK ON A CLEAN, SOFT SURFACE TO PREVENT DAMAGE TO THE COMPONENTS.**

SUB TASK 25-41-51-000-156-A01
D2549010400800 D2549020805200 D2549030408200 D2549040500600 R225401673-000

1. Removal of the Floor Pan (13M-1)

NOTE: **See TABLE 3465 for the references for the replacement procedures of permanent installed parts.**
More data for bonded parts are given in column SEE REPAIR TASK/SPM REFERENCE. Use the data for the selection of the related repair solution.

IPL FIG. ITEM	COMPONENT PART NAME	IPL FIG. ITEM	REPLACEMENT PART NAME	SEE REPAIR TASK/ SPM REFERENCE
13M-001 13M-010	Floor Pan Floor Pan Assembly	13M-060	Non Textile Floor-Covering	Replacement of the Bonded Parts Material No. Scotch Grip 847
13M-001 13M-010	Floor Pan Floor Pan Assembly	13M-080	Insert	SPM 25-00-01

Table 3465
Reference list for the replacement of permanent installed parts

(a) Remove the screws 13M-100, 13M-120, the washers 13M-110, 13M-130 and the floor pan assembly 13M-010 from the lavatory structure.

(b) Disassemble the floor pan assembly 13M-010 as follows:

1 Remove the screws 13M-030, the washers 13M-040, the nuts 13M-050 and the flaps 13M-020 from the floor pan assembly 13M-010.

SUB TASK 25-41-51-000-156-B01
D2549020400000

2. Removal of the Floor Pan (13M-1)

NOTE: **See TABLE 3466 for the references for the replacement procedures of permanent installed parts.**

IPL FIG. ITEM	COMPONENT PART NAME	IPL FIG. ITEM	REPLACEMENT PART NAME	SEE REPAIR TASK/ SPM REFERENCE
13M-001 13M-010	Floor Pan Floor Pan Assembly	13M-080	Insert	SPM 25-00-01

Table 3466
Reference list for the replacement of permanent installed parts

(a) Remove the screws 13M-100, 13M-120, the washers 13M-110, 13M-130 and the floor pan assembly 13M-010 from the lavatory structure.

(b) Disassemble the floor pan assembly 13M-010 as follows:

1 Remove the screws 13M-030, the washers 13M-040, the nuts 13M-050 and the flaps 13M-020 from the floor pan assembly 13M-010.

TASK 25-41-51-000-810-P01

D2549010401800 D2549010403400 D2549010403600 D2549010404000 D2549010404200 D2549010405200 D2549010406000 D2549010406800 D2549020300000 D2549020301800 D2549020302000 D2549020400600 D2549020400800 D2549020401200 D2549020401400 D2549020402200 D2549020402600 D2549020403000 D2549020403200 D2549020403400 D2549020404000 D2549020406000 D2549020406600 D2549020407200 D2549020407400 D2549020407600 D2549020408000 D2549020408200 D2549020408600 D2549020409400 D2549020410400 D2549020411000 D2549020411200 D2549020411600 D2549020412600 D2549020413400 D2549020807200 D2549020809600 D2549030409000 D2549030409200 D2549030409600 D2549030410000 D2549030410200 D2549030411200 D2549030411800 D2549030412000 D2549030412200 D2549030412800 D2549030413400 D2549030414000 D2549030414600 D2549030700000 D2549030700200 D2549030700600 D2549030701000 D2549030702600 D2549030703400 D2549030703600 D2549030703800 D2549030704200 D2549030704400 D2549030704800 D2549030705200 D2549030705600 R225401134-014 R225401134-038 R225401136-006 R225401136-012 R225401136-024 R225401196-018 R225401196-064 R225401627-000 R225401627-002 R225401627-004 R225401671-000 R225401671-002 R225401675-000 R225401683-000 R225401688-000 R225401689-004 R225401689-006 R225401697-000 R225401697-002

113. Removal of the Floor Pan

A. General

A complete disassembly of the component is not necessary and not recommended.

Do not disassemble the component more than it is necessary for:

- Cleaning
- Visual Inspection
- Replacement of defective parts.

B. Job Set-up Information

(1) Consumable Materials

REFERENCE	DESIGNATION
	Scotch 4930 - Adhesive Tape
	Scotch Grip 847

Table 3467
Consumable Materials

C. Procedure

WARNING: **BE CAREFUL WHEN YOU USE SOLVENTS/CLEANING AGENTS, SEALANTS AND OTHER MATERIALS. OBEY THE MATERIAL MANUFACTURER'S INSTRUCTIONS AND THE LOCAL REGULATIONS. MAKE SURE THAT THERE IS A GOOD FLOW OF AIR THROUGH THE WORK AREA. DO NOT BREATHE THE FUMES. DO NOT SMOKE. DO NOT USE THESE MATERIALS NEAR A FLAME, SPARKS OR SOURCES OF HEAT. USE PROTECTIVE CLOTHING, GOGGLES AND GLOVES. IF YOU GET ONE OF THESE MATERIALS ON YOUR SKIN OR IN YOUR EYES, FLUSH IT AWAY WITH A FLOW OF CLEAN WATER. IF YOU GET ONE OF THESE MATERIALS IN YOUR MOUTH, GET IMMEDIATE MEDICAL AID. IN GENERAL, THESE MATERIALS ARE POISONOUS, FLAMMABLE AND SKIN IRRITANTS.**

CAUTION: **DO ALL THE WORK ON A CLEAN, SOFT SURFACE TO PREVENT DAMAGE TO THE COMPONENTS.**

SUB TASK 25-41-51-000-157-A01

1. Removal of the Floor Pan (13N-1)

NOTE: **See TABLE 3468 for the references for the replacement procedures of permanent installed parts.**

More data for bonded parts are given in column SEE REPAIR TASK. Use the data for the selection of the related repair solution.

IPL FIG. ITEM	COMPONENT PART NAME	IPL FIG. ITEM	REPLACEMENT PART NAME	SEE REPAIR TASK
13N-001 13N-010	Floor Pan Floor Pan Assembly	13N-013 13N-015	Floor Pan Adhesive Tape	Repair of the Laminated Floor Pan Replacement of the Bonded Parts Material No. Scotch 4930 - Adhesive Tape
13N-001 13N-010	Floor Pan Floor Pan Assembly	13N-020	Non Textile Floor-Covering	Replacement of the Bonded Parts Material No. Scotch Grip 847

Table 3468
Reference list for the replacement of permanent installed parts

(a) Remove the screws 13N-190, 13N-210, the washers 13N-200, 13N-220, 13N-230 and the floor pan assembly 13N-010 from the angles 13N-090, 13N-100 and from the lavatory structure.

(b) Disassembly of the Floor Pan Assembly 13N-010

1 Remove the adhesive tape 13N-24, the sealant 13N-22 and the non textile floor-covering 13N-20.

(c) Remove the screws 13N-160, the washers 13N-140, the nuts 13N-170 and the angles 13N-150 from the floor-panel end strip 13N-040.

(d) Remove the screws 13N-110 and the angles 13N-090, 13N-100 from the floor panel assembly 13N-030.

(e) Remove the screws 13N-130, the washers 13N-140 and the angle 13N-120 from the floor panel assembly 13N-030.

(f) Remove the screws 13N-180 and the floor panel assembly 13N-030 from the lavatory structure.

(g) Disassemble the floor panel assembly 13N-030 as follows:

1 Remove the screws 13N-050 and the floor-panel end strip 13N-040 from the floor panel assembly 13N-030.

(h) Remove the adhesive tape 13N-24, the sealant 13N-22 and the non textile floor-covering 13N-20.

TASK 25-41-51-000-810-Q01

D2549010401000 D2549010402200 D2549010403200 D2549010405000 D2549010405800 D2549010407000 D2549010610600 D2549020401000 D2549020401600 D2549020403600 D2549020406400 D2549020406800 D2549020407000 D2549020407800 D2549020804400 D2549030409400 D2549030410600 D2549030411400 D2549030412400 D2549030412600 D2549030413200 D2549040500400 D2549040500800 D2549040501000 D2549040501400 D2549040501800 D2549040502000 R225401152-010, R225401183-004 R225401196-020 R225401196-042 R225401196-066 R225401602-000 R225401611-000 R225401611-014 R225401611-016 R225401624-000 R225401643-006 R225401643-008 R225401646-002 R225401648-004 R225401648-006 R225401648-008 R225401649-000 R225401673-002 R225401673-004 R225401673-006 R225401676-000 R225401685-000 R225401803-000 R225401803-002

114. Removal of the Floor Pan

A. General

A complete disassembly of the component is not necessary and not recommended.

Do not disassemble the component more than it is necessary for:

- Cleaning
- Visual Inspection
- Replacement of defective parts.

B. Job Set-up Information

(1) Consumable Materials

REFERENCE	DESIGNATION
	Scotch 4930 - Adhesive Tape
	Scotch Grip 847

Table 3469
Consumable Materials

C. Procedure

WARNING: **BE CAREFUL WHEN YOU USE SOLVENTS/CLEANING AGENTS, SEALANTS AND OTHER MATERIALS. OBEY THE MATERIAL MANUFACTURER'S INSTRUCTIONS AND THE LOCAL REGULATIONS. MAKE SURE THAT THERE IS A GOOD FLOW OF AIR THROUGH THE WORK AREA. DO NOT BREATHE THE FUMES. DO NOT SMOKE. DO NOT USE THESE MATERIALS NEAR A FLAME, SPARKS OR SOURCES OF HEAT. USE PROTECTIVE CLOTHING, GOGGLES AND GLOVES. IF YOU GET ONE OF THESE MATERIALS ON YOUR SKIN OR IN YOUR EYES, FLUSH IT AWAY WITH A FLOW OF CLEAN WATER. IF YOU GET ONE OF THESE MATERIALS IN YOUR MOUTH, GET IMMEDIATE MEDICAL AID. IN GENERAL, THESE MATERIALS ARE POISONOUS, FLAMMABLE AND SKIN IRRITANTS.**

CAUTION: **DO ALL THE WORK ON A CLEAN, SOFT SURFACE TO PREVENT DAMAGE TO THE COMPONENTS.**

SUB TASK 25-41-51-000-161-A01

1. Removal of the Floor Pan (13P-1)

NOTE: **See TABLE 3470 for the references for the replacement procedures of permanent installed parts.**

More data for bonded parts are given in column SEE REPAIR TASK. Use the data for the selection of the related repair solution.

IPL FIG. ITEM	COMPONENT PART NAME	IPL FIG. ITEM	REPLACEMENT PART NAME	SEE REPAIR TASK
13P-001 13P-010	Floor Pan Floor Pan Assembly	13P-020 13P-030	Floor Pan Adhesive Tape	Repair of the Laminated Floor Pan Replacement of the Bonded Parts Material No. Scotch 4930 - Adhesive Tape
13P-001 13P-010	Floor Pan Floor Pan Assembly	13P-040	Non Textile Floor-Covering	Replacement of the Bonded Parts Material No. Scotch Grip 847

Table 3470
Reference list for the replacement of permanent installed parts

(a) Remove the screws 13P-210, 13P-230, the washers 13P-220, 13P-240, 13P-250 and the floor pan assembly 13P-010 from the angles 13P-110, 13P-120 and from the lavatory structure.

(b) Disassemble the floor panel assembly 13P-010 as follows:

1 If necessary, remove the non-textile floor covering 13P-040, the adhesive tape 13P-030 and the sealant 13P-045 from the floor pan 13P-020.

(c) Remove the screws 13P-180, the washers 13P-160, the nuts 13P-190 and the angles 13P-170 from the floor-panel end strip 13P-060.

(d) Remove the screws 13P-130 and the angles 13P-110, 13P-120 from the floor panel assembly 13P-050.

(e) Remove the screws 13P-150, the washers 13P-160 and the angle 13P-140 from the floor panel assembly 13P-050.

(f) Remove the screws 13P-200 and the floor panel assembly 13P-050 from the lavatory structure.

(g) Disassemble the floor panel assembly 13P-050 as follows:

1 Remove the screws 13P-070 and the floor-panel end strip 13P-060 from the floor panel assembly 13P-050.

TASK 25-41-51-000-810-R01

D2547160900200 D2547160900400 D2549010401400 D2549010401600 D2549010403800 D2549010404400 D2549010406200 D2549010613600 D2549020300400 D2549020300600 D2549020300800 D2549020302800 D2549020402400 D2549020408800 D2549020409000 D2549020409200 D2549020409600 D2549020409800 D2549020410600 D2549030410800 D2549030413000 D2549030414200 D2549030414400 D2549030701600 D2549030702400 D2549030704000 D2549040501600 R225401196-022 R225401196-024 R225401196-068 R225401196-070 R225401691-000 R225401691-002

115. Removal of the Floor Pan

A. General

A complete disassembly of the component is not necessary and not recommended.

Do not disassemble the component more than it is necessary for:

- Cleaning
- Visual Inspection
- Replacement of defective parts.

B. Job Set-up Information
(1) Consumable Materials

REFERENCE	DESIGNATION
	Scotch 4930 - Adhesive Tape
	Scotch Grip 847

Table 3471
Consumable Materials

C. Procedure

WARNING: **BE CAREFUL WHEN YOU USE SOLVENTS/CLEANING AGENTS, SEALANTS AND OTHER MATERIALS. OBEY THE MATERIAL MANUFACTURER'S INSTRUCTIONS AND THE LOCAL REGULATIONS. MAKE SURE THAT THERE IS A GOOD FLOW OF AIR THROUGH THE WORK AREA. DO NOT BREATHE THE FUMES. DO NOT SMOKE. DO NOT USE THESE MATERIALS NEAR A FLAME, SPARKS OR SOURCES OF HEAT. USE PROTECTIVE CLOTHING, GOGGLES AND GLOVES. IF YOU GET ONE OF THESE MATERIALS ON YOUR SKIN OR IN YOUR EYES, FLUSH IT AWAY WITH A FLOW OF CLEAN WATER. IF YOU GET ONE OF THESE MATERIALS IN YOUR MOUTH, GET IMMEDIATE MEDICAL AID. IN GENERAL, THESE MATERIALS ARE POISONOUS, FLAMMABLE AND SKIN IRRITANTS.**

CAUTION: **DO ALL THE WORK ON A CLEAN, SOFT SURFACE TO PREVENT DAMAGE TO THE COMPONENTS.**

SUB TASK 25-41-51-000-164-A01

1. Removal of the Floor Pan (13Q-1)

NOTE: **See TABLE 3472 for the references for the replacement procedures of permanent installed parts.**

More data for bonded parts are given in column SEE REPAIR TASK. Use the data for the selection of the related repair solution.

IPL FIG. ITEM	COMPONENT PART NAME	IPL FIG. ITEM	REPLACEMENT PART NAME	SEE REPAIR TASK
13Q-001 13Q-010	Floor Pan Floor Pan Assembly	13Q-020 13Q-030	Floor Pan Adhesive Tape	Repair of the Laminated Floor Pan Replacement of the Bonded Parts Material No. Scotch 4930 - Adhesive Tape
13Q-001 13Q-010	Floor Pan Floor Pan Assembly	13Q-040	Non Textile Floor-Covering	Replacement of the Bonded Parts Material No. Scotch Grip 847

Table 3472
Reference list for the replacement of permanent installed parts

(a) Remove the screws 13Q-210, 13Q-230, the washers 13Q-220, 13Q-240, 13Q-250 and the floor pan assembly 13Q-010 from the angles 13Q-110, 13Q-120 and from the lavatory structure.

(b) Remove the screws 13Q-180, the washers 13Q-160, the nuts 13Q-190 and the angles 13Q-170 from the floor-panel end strip 13Q-060.

(c) Remove the screws 13Q-130 and the angles 13Q-110, 13Q-120 from the floor panel assembly 13Q-050.

(d) Remove the screws 13Q-150, the washers 13Q-160 and the angle 13Q-140 from the floor panel assembly 13Q-050.

(e) Remove the screws 13Q-200 and the floor panel assembly 13Q-050 from the lavatory structure.

(f) Disassemble the floor panel assembly 13Q-050 as follows:

1 Remove the screws 13Q-070 and the floor-panel end strip 13Q-060 from the floor panel assembly 13Q-050.

2 If necessary, remove the non-textile floor covering 13Q-040, the adhesive tape 13Q-045 and the sealant 13Q-042 from the floor pan assembly 13Q-010.

TASK 25-41-51-000-810-S01
D2549010607400 D2549010609000 D2549010611600 D2549010612000 D2549020609200 D2549020612000 D2549020702800 D2549020704600 D2549020707600 D2549030411600 D2549030414800 D2549030506000 D2549030508400 D2549030510000 D2549030601400 D2549030602200 D2549030604400 D2549030608200 D2549030702800 R225401160-000 R225401160-002

116. Removal of the Floor Pan

A. General

A complete disassembly of the component is not necessary and not recommended.

Do not disassemble the component more than it is necessary for:

- Cleaning
- Visual Inspection
- Replacement of defective parts.

B. Job Set-up Information
(1) Consumable Materials

REFERENCE	DESIGNATION
	Scotch 4930 - Adhesive Tape

Table 3473
Consumable Materials

C. Procedure

WARNING: **BE CAREFUL WHEN YOU USE SOLVENTS/CLEANING AGENTS, SEALANTS AND OTHER MATERIALS. OBEY THE MATERIAL MANUFACTURER'S INSTRUCTIONS AND THE LOCAL REGULATIONS. MAKE SURE THAT THERE IS A GOOD FLOW OF AIR THROUGH THE WORK AREA. DO NOT BREATHE THE FUMES. DO NOT SMOKE. DO NOT USE THESE MATERIALS NEAR A FLAME, SPARKS OR SOURCES OF HEAT. USE PROTECTIVE CLOTHING, GOGGLES AND GLOVES. IF YOU GET ONE OF THESE MATERIALS ON YOUR SKIN OR IN YOUR EYES, FLUSH IT AWAY WITH A FLOW OF CLEAN WATER. IF YOU GET ONE OF THESE MATERIALS IN YOUR MOUTH, GET IMMEDIATE MEDICAL AID. IN GENERAL, THESE MATERIALS ARE POISONOUS, FLAMMABLE AND SKIN IRRITANTS.**

CAUTION: **DO ALL THE WORK ON A CLEAN, SOFT SURFACE TO PREVENT DAMAGE TO THE COMPONENTS.**

SUB TASK 25-41-51-000-166-A01

1. Removal of the Floor Pan (13R-1)

NOTE: **See TABLE 3474 for the references for the replacement procedures of permanent installed parts.**

More data for bonded parts are given in column SEE REPAIR TASK. Use the data for the selection of the related repair solution.

IPL FIG. ITEM	COMPONENT PART NAME	IPL FIG. ITEM	REPLACEMENT PART NAME	SEE REPAIR TASK
13R-001	Floor Pan	13R-010 13R-020	Floor Pan Adhesive Tape	Repair of the Laminated Floor Pan Replacement of the Bonded Parts Material No. Scotch 4930 - Adhesive Tape

Table 3474
Reference list for the replacement of permanent installed parts

(a) Remove the screws 13R-190, 13R-210 and the washers 13R-200, 13R-220, 13R-230 from the angles 13R-090, 13R-100 and from the lavatory structure.

(b) Remove the screws 13R-160, the washers 13R-140, the nuts 13R-170 and the angles 13R-150 from the floor-panel end strip 13R-040.

(c) Remove the screws 13R-110 and the angles 13R-090, 13R-100 from the floor panel assembly 13R-030.

(d) Remove the screws 13R-130, the washers 13R-140 and the angle 13R-120 from the floor panel assembly 13R-030.

(e) Remove the screws 13R-180 and the floor panel assembly 13R-030 from the lavatory structure.

(f) Disassemble the floor panel assembly 13R-030 as follows:

1 Remove the screws 13R-050 and the floor-panel end strip 13R-040 from the floor panel assembly 13R-030.

TASK 25-41-51-000-810-T01

D2549010402400 D2549010404600 D2549010404800 D2549010405400 D2549010405600 D2549010406400 D2549020301000 D2549020301600 D2549020402000 D2549020410200 D2549020410800 D2549020411400 D2549020411800 D2549020412000 D2549020412200 D2549020412400 D2549020412800 D2549020413000 D2549020413200 D2549020413600 D2549020413800 D2549020414000 D2549020414200 D2549020414600 D2549020414800 D2549030413600 D2549030700400 D2549030700800 D2549030701400 D2549030701800 D2549030702000 D2549030702200 D2549030703000 D2549030703200 D2549030704600 D2549040501200 R225401136-008 R225401136-014 R225401183-006 R225401199-012 R225401611-018 R225401611-020 R225401685-002 R225401808-000 R225401811-000 R225401814-000

117. Removal of the Floor Pan

A. General

A complete disassembly of the component is not necessary and not recommended.

Do not disassemble the component more than it is necessary for:

- Cleaning
- Visual Inspection
- Replacement of defective parts.

B. Job Set-up Information
(1) Consumable Materials

REFERENCE	DESIGNATION
	Scotch 4930 - Adhesive Tape
	Scotch Grip 847

Table 3475
Consumable Materials

C. Procedure

WARNING: **BE CAREFUL WHEN YOU USE SOLVENTS/CLEANING AGENTS, SEALANTS AND OTHER MATERIALS. OBEY THE MATERIAL MANUFACTURER'S INSTRUCTIONS AND THE LOCAL REGULATIONS. MAKE SURE THAT THERE IS A GOOD FLOW OF AIR THROUGH THE WORK AREA. DO NOT BREATHE THE FUMES. DO NOT SMOKE. DO NOT USE THESE MATERIALS NEAR A FLAME, SPARKS OR SOURCES OF HEAT. USE PROTECTIVE CLOTHING, GOGGLES AND GLOVES. IF YOU GET ONE OF THESE MATERIALS ON YOUR SKIN OR IN YOUR EYES, FLUSH IT AWAY WITH A FLOW OF CLEAN WATER. IF YOU GET ONE OF THESE MATERIALS IN YOUR MOUTH, GET IMMEDIATE MEDICAL AID. IN GENERAL, THESE MATERIALS ARE POISONOUS, FLAMMABLE AND SKIN IRRITANTS.**

CAUTION: **DO ALL THE WORK ON A CLEAN, SOFT SURFACE TO PREVENT DAMAGE TO THE COMPONENTS.**

SUB TASK 25-41-51-000-167-A01

1. Removal of the Floor Pan (13S-1)

NOTE: **See TABLE 3476 for the references for the replacement procedures of permanent installed parts.**

More data for bonded parts are given in column SEE REPAIR TASK. Use the data for the selection of the related repair solution.

IPL FIG. ITEM	COMPONENT PART NAME	IPL FIG. ITEM	REPLACEMENT PART NAME	SEE REPAIR TASK
13S-001 13S-010	Floor Pan Floor Pan Assembly	13S-020 13S-030	Floor Pan Adhesive Tape	Repair of the Laminated Floor Pan Replacement of the Bonded Parts Material No. Scotch 4930 - Adhesive Tape
13S-001 13S-010	Floor Pan Floor Pan Assembly	13S-040	Non Textile Floor-Covering	Replacement of the Bonded Parts Material No. Scotch Grip 847

Table 3476
Reference list for the replacement of permanent installed parts

(a) Remove the screws 13S-210, 13S-230, the washers 13S-220, 13S-240, 13S-250 and the floor pan assembly 13S-010 from the angles 13S-110, 13S-120 and from the lavatory structure.

(b) Remove the screws 13S-180, the washers 13S-160, the nuts 13S-190 and the angles 13S-170 from the floor-panel end strip 13S-060.

(c) Remove the screws 13S-130 and the angles 13S-110, 13S-120 from the floor panel assembly 13S-050.

(d) Remove the screws 13S-150, the washers 13S-160 and the angle 13S-140 from the floor panel assembly 13S-050.

(e) Remove the screws 13S-200 and the floor panel assembly 13S-050 from the lavatory structure.

(f) Disassemble the floor panel assembly 13S-050 as follows:

1 Remove the screws 13S-070 and the floor-panel end strip 13S-060 from the floor panel assembly 13S-050.

TASK 25-41-51-000-810-U01

D2549010400000 D2549010402000 D2549010402600 D2549010402800 D2549010510200 D2549010514200 D2549010610000 D2549010613800 D2549010614600 D2549020403800 D2549020404800 D2549020511600 D2549020514800 D2549020606000 D2549020608800 D2549020706400 D2549020707800 D2549020708800 D2549020800000 D2549020802000 D2549020802600 D2549020805000 D2549020805600 D2549020808200 D2549020808400 D2549020809800 D2549020814200 D2549030401400 D2549030405600 D2549030511600 D2549030512200 D2549030600000 D2549030603000 D2549030604600 D2549030606000 D2549030606400 D2549030612000 R225401107-004 R225401192-002 R225401611-008 R225401611-010 R225401629-000 R225401629-002 R225401658-000

118. Removal of the Floor Pan

A. General

A complete disassembly of the component is not necessary and not recommended.

Do not disassemble the component more than it is necessary for:

- Cleaning
- Visual Inspection
- Replacement of defective parts.

B. Job Set-up Information
(1) Consumable Materials

REFERENCE	DESIGNATION
08-006B	Adhesive General Purpose
	Scotch 4930 - Adhesive Tape

Table 3477
Consumable Materials

C. Procedure

WARNING: **BE CAREFUL WHEN YOU USE SOLVENTS/CLEANING AGENTS, SEALANTS AND OTHER MATERIALS. OBEY THE MATERIAL MANUFACTURER'S INSTRUCTIONS AND THE LOCAL REGULATIONS. MAKE SURE THAT THERE IS A GOOD FLOW OF AIR THROUGH THE WORK AREA. DO NOT BREATHE THE FUMES. DO NOT SMOKE. DO NOT USE THESE MATERIALS NEAR A FLAME, SPARKS OR SOURCES OF HEAT. USE PROTECTIVE CLOTHING, GOGGLES AND GLOVES. IF YOU GET ONE OF THESE MATERIALS ON YOUR SKIN OR IN YOUR EYES, FLUSH IT AWAY WITH A FLOW OF CLEAN WATER. IF YOU GET ONE OF THESE MATERIALS IN YOUR MOUTH, GET IMMEDIATE MEDICAL AID. IN GENERAL, THESE MATERIALS ARE POISONOUS, FLAMMABLE AND SKIN IRRITANTS.**

CAUTION: **DO ALL THE WORK ON A CLEAN, SOFT SURFACE TO PREVENT DAMAGE TO THE COMPONENTS.**

SUB TASK 25-41-51-000-169-A01

1. Removal of the Floor Pan (13T-1)

NOTE: **See TABLE 3478 for the references for the replacement procedures of permanent installed parts.**

More data for bonded parts are given in column SEE REPAIR TASK. Use the data for the selection of the related repair solution.

IPL FIG. ITEM	COMPONENT PART NAME	IPL FIG. ITEM	REPLACEMENT PART NAME	SEE REPAIR TASK
13T-001 13T-010	Floor Pan Lavatory Floor Assembly	13T-020 13T-030	Floor Pan Adhesive Tape	Repair of the Laminated Floor Pan Replacement of the Bonded Parts Material No. Scotch 4930 - Adhesive Tape
13T-001 13T-040	Floor Pan Floor Panel Assembly	13T-200	Sealing Section	Repair of the Defective Sealing Profiles Material No. 08-006B Adhesive General Purpose

Table 3478
Reference list for the replacement of permanent installed parts

(a) Remove the screws 13T-210, 13T-230, 13T-250, 13T-260, the washers 13T-220, 13T-240, 13T-270 and the lavatory floor assembly 13T-010 from the angles 13T-100, 13T-110, from the floor panel assembly 13T-040 and from the lavatory structure.

(b) Remove the screws 13T-170, the washers 13T-150, the nuts 13T-180 and the angles 13T-160 from the floor-panel end strip 13T-050.

(c) Remove the screws 13T-120 and the angles 13T-100, 13T-110 from the floor panel assembly 13T-040.

(d) Remove the screws 13T-260, the washers 13T-270 and the angles 13T-160 from the lavatory structure.

(e) Remove the screws 13T-260, the washers 13T-270 and the angle 13T-130 from the lavatory structure.

(f) Remove the screws 13T-140, the washers 13T-150 and the angle 13T-130 from the floor panel assembly 13T-040.

(g) Remove the screws 13T-190 and the floor panel assembly 13T-040 from the lavatory structure.

(h) Disassemble the floor panel assembly 13T-040 as follows:

1 Remove the screws 13T-060 and the floor-panel end strip 13T-050 from the lavatory structure.

TASK 25-41-51-000-810-V01
D2549010502000 D2549010504200 D2549010504800 D2549010508400 D2549010509000 D2549010511200 D2549010513200 D2549010601000 D2549020500200 D2549020504000 D2549020600000 D2549020601200 D2549020603200 D2549020710400 R225401107-002

119. Removal of the Floor Pan

A. General

A complete disassembly of the component is not necessary and not recommended.

Do not disassemble the component more than it is necessary for:

- Cleaning
- Visual Inspection
- Replacement of defective parts.

B. Job Set-up Information
(1) Consumable Materials

REFERENCE	DESIGNATION
08-006B	Adhesive General Purpose
	Scotch 4930 - Adhesive Tape

Table 3479
Consumable Materials

C. Procedure

WARNING: **BE CAREFUL WHEN YOU USE SOLVENTS/CLEANING AGENTS, SEALANTS AND OTHER MATERIALS. OBEY THE MATERIAL MANUFACTURER'S INSTRUCTIONS AND THE LOCAL REGULATIONS. MAKE SURE THAT THERE IS A GOOD FLOW OF AIR THROUGH THE WORK AREA. DO NOT BREATHE THE FUMES. DO NOT SMOKE. DO NOT USE THESE MATERIALS NEAR A FLAME, SPARKS OR SOURCES OF HEAT. USE PROTECTIVE CLOTHING, GOGGLES AND GLOVES. IF YOU GET ONE OF THESE MATERIALS ON YOUR SKIN OR IN YOUR EYES, FLUSH IT AWAY WITH A FLOW OF CLEAN WATER. IF YOU GET ONE OF THESE MATERIALS IN YOUR MOUTH, GET IMMEDIATE MEDICAL AID. IN GENERAL, THESE MATERIALS ARE POISONOUS, FLAMMABLE AND SKIN IRRITANTS.**

CAUTION: **DO ALL THE WORK ON A CLEAN, SOFT SURFACE TO PREVENT DAMAGE TO THE COMPONENTS.**

SUB TASK 25-41-51-000-173-A01

1. Removal of the Floor Pan (13U-1)

NOTE: **See TABLE 3480 for the references for the replacement procedures of permanent installed parts.**

More data for bonded parts are given in column SEE REPAIR TASK. Use the data for the selection of the related repair solution.

IPL FIG. ITEM	COMPONENT PART NAME	IPL FIG. ITEM	REPLACEMENT PART NAME	SEE REPAIR TASK
13U-001 13U-010	Floor Pan Lavatory Floor Assembly	13U-020 13U-030	Floor Pan Assembly Adhesive Tape	Repair of the Laminated Floor Pan Replacement of the Bonded Parts Material No. Scotch 4930 - Adhesive Tape
13U-001 13U-060	Floor Pan Floor Panel Assembly	13U-230	Sealing Section	Repair of the Defective Sealing Profiles Material No. 08-006B Adhesive General Purpose
13U-001 13U-290	Floor Pan Flap Assembly	13U-300	Blanking Cap	Replacement of the Riveted Parts

Table 3480
Reference list for the replacement of permanent installed parts

(a) Remove the screws 13U-320, 13U-340, the washers 13U-330, 13U-360 and the lavatory floor assembly 13U-010 from the angles 13U-130, 13U-140 and from the lavatory structure.

(b) Remove and disassemble the flap assemblies 13U-290 as follows:

1 Remove the screws 13U-280, the washers 13U-270, the nuts 13U-260 and the flap assemblies 13U-290 from the angles 13U-040, 13U-050.

WARNING: BE VERY CAREFUL WHEN YOU REMOVE OR INSTALL THE SPRING. BECAUSE THERE IS REMAINING TENSION IN THE SPRING, IT CAN CAUSE YOU INJURY.

2 Remove the springs 13U-310.

3 Remove the screws 13U-240, the washers 13U-250 and the angles 13U-040, 13U-050 from the floor panel assembly 13U-060.

(c) Remove the screws 13U-200, the washers 13U-180, the nuts 13U-210 and the angles 13U-190 from the floor-panel end strip 13U-070.

(d) Remove the screws 13U-350, the washers 13U-360 and the angle 13U-130 from the lavatory structure.

(e) Remove the screws 13U-150 and the angles 13U-130, 13U-140 from the floor panel assembly 13U-060.

(f) Remove the screws 13U-350, the washers 13U-360 and the angle 13U-160 from the lavatory structure.

(g) Remove the screws 13U-350, the washers 13U-360 and the angles 13U-190 from the lavatory structure.

(h) Remove the screws 13U-170, the washers 13U-180 and the angle 13U-160 from the floor panel assembly 13U-060.

(i) Remove the screws 13U-220 and the floor panel assembly 13U-060 from the lavatory structure.

(j) Disassemble the floor panel assembly 13U-060 as follows:

1 Remove the screws 13U-080 and the floor-panel end strip 13U-070 from the floor panel assembly 13U-060.

TASK 25-41-51-000-810-W01
D2549010501000 D2549010502400 D2549010601600 D2549010606000 D2549010606200 D2549020501000 D2549020503000 D2549020506200 D2549020510000 D2549020601600 D2549020606800 D2549020607000 D2549020610800 D2549020614800 D2549020700400 D2549020700600 D2549020705600 D2549020706000 D2549020709200 D2549030500800 D2549030502000 D2549030502800 D2549030504000 D2549030600200 R225401107-000 R225401133-000 R225401159-000 R225401188-004 R225401192-000

120. Removal of the Floor Pan

A. General

A complete disassembly of the component is not necessary and not recommended.

Do not disassemble the component more than it is necessary for:

- Cleaning
- Visual Inspection
- Replacement of defective parts.

B. Job Set-up Information
(1) Consumable Materials

REFERENCE	DESIGNATION
08-082	Acrylic Pressure Sensitive Adhesive Film

Table 3481
Consumable Materials

C. Procedure

WARNING: **BE CAREFUL WHEN YOU USE SOLVENTS/CLEANING AGENTS, SEALANTS AND OTHER MATERIALS. OBEY THE MATERIAL MANUFACTURER'S INSTRUCTIONS AND THE LOCAL REGULATIONS. MAKE SURE THAT THERE IS A GOOD FLOW OF AIR THROUGH THE WORK AREA. DO NOT BREATHE THE FUMES. DO NOT SMOKE. DO NOT USE THESE MATERIALS NEAR A FLAME, SPARKS OR SOURCES OF HEAT. USE PROTECTIVE CLOTHING, GOGGLES AND GLOVES. IF YOU GET ONE OF THESE MATERIALS ON YOUR SKIN OR IN YOUR EYES, FLUSH IT AWAY WITH A FLOW OF CLEAN WATER. IF YOU GET ONE OF THESE MATERIALS IN YOUR MOUTH, GET IMMEDIATE MEDICAL AID. IN GENERAL, THESE MATERIALS ARE POISONOUS, FLAMMABLE AND SKIN IRRITANTS.**

CAUTION: **DO ALL THE WORK ON A CLEAN, SOFT SURFACE TO PREVENT DAMAGE TO THE COMPONENTS.**

SUB TASK 25-41-51-000-175-A01

D2549010501000 D2549010502400 D2549010606000 D2549020501000 D2549020503000 D2549020506200 D2549020510000 D2549020601600 D2549020606800 D2549020607000 D2549020610800 D2549020614800 D2549020700400 D2549020700600 D2549020705600 D2549020706000 D2549020709200 D2549030500800 D2549030502000 D2549030502800 D2549030600200 R225401107-000 R225401133-000 R225401159-000 R225401188-004 R225401192-000

1. Removal of the Floor Pan (13V-1)

NOTE: **See TABLE 3482 for the references for the replacement procedures of permanent installed parts.**

More data for bonded parts are given in column SEE REPAIR TASK. Use the data for the selection of the related repair solution.

IPL FIG. ITEM	COMPONENT PART NAME	IPL FIG. ITEM	REPLACEMENT PART NAME	SEE REPAIR TASK
13V-001 13V-010	Floor Pan Floor Pan Assembly	13V-060	Non Textile Floor-Covering	Replacement of the Bonded Parts Material No. 08-082 Acrylic Pressure Sensitive Adhesive Film

Table 3482
Reference list for the replacement of permanent installed parts

(a) Remove the screws 13V-090, 13V-100, the washers 13V-110, 13V-120 and the floor pan assembly 13V-010 from the lavatory structure.

(b) Disassemble the floor pan assembly 13V-010 as follows:

1 Remove the screws 13V-030, the washers 13V-040, the nuts 13V-050 and the flap assemblies 13V-020 from the floor pan assembly 13V-010.

SUB TASK 25-41-51-000-175-B01
D2549010601600 D2549010606200 D2549030504000

2. Removal of the Floor Pan (13V-1)

(a) Remove the screws 13V-090, 13V-100, the washers 13V-110, 13V-120 and the floor pan assembly 13V-010 from the lavatory structure.

(b) Disassemble the floor pan assembly 13V-010 as follows:

1 Remove the screws 13V-030, the washers 13V-040, the nuts 13V-050 and the flap assemblies 13V-020 from the floor pan assembly 13V-010.

TASK 25-41-51-000-810-X01
D2549030610200 D2549030701200

121. Removal of the Floor Pan

A. General

A complete disassembly of the component is not necessary and not recommended.

Do not disassemble the component more than it is necessary for:

- Cleaning
- Visual Inspection
- Replacement of defective parts.

B. Job Set-up Information
(1) Consumable Materials

REFERENCE	DESIGNATION
08-082	Acrylic Pressure Sensitive Adhesive Film
08-010A	Epoxy Resin and Hardener Adhesive
08-006B	Adhesive General Purpose
	Scotch Grip 847

Table 3483
Consumable Materials

C. Procedure

WARNING: **BE CAREFUL WHEN YOU USE SOLVENTS/CLEANING AGENTS, SEALANTS AND OTHER MATERIALS. OBEY THE MATERIAL MANUFACTURER'S INSTRUCTIONS AND THE LOCAL REGULATIONS. MAKE SURE THAT THERE IS A GOOD FLOW OF AIR THROUGH THE WORK AREA. DO NOT BREATHE THE FUMES. DO NOT SMOKE. DO NOT USE THESE MATERIALS NEAR A FLAME, SPARKS OR SOURCES OF HEAT. USE PROTECTIVE CLOTHING, GOGGLES AND GLOVES. IF YOU GET ONE OF THESE MATERIALS ON YOUR SKIN OR IN YOUR EYES, FLUSH IT AWAY WITH A FLOW OF CLEAN WATER. IF YOU GET ONE OF THESE MATERIALS IN YOUR MOUTH, GET IMMEDIATE MEDICAL AID. IN GENERAL, THESE MATERIALS ARE POISONOUS, FLAMMABLE AND SKIN IRRITANTS.**

CAUTION: **DO ALL THE WORK ON A CLEAN, SOFT SURFACE TO PREVENT DAMAGE TO THE COMPONENTS.**

SUB TASK 25-41-51-000-177-A01
D2549030610200

1. Removal of the Floor Pan (13W-1)

NOTE: **See TABLE 3484 for the references for the replacement procedures of permanent installed parts.**

More data for bonded parts are given in column SEE REPAIR TASK. Use the data for the selection of the related repair solution.

IPL FIG. ITEM	COMPONENT PART NAME	IPL FIG. ITEM	REPLACEMENT PART NAME	SEE REPAIR TASK
13W-001 13W-010	Floor Pan Floor Pan Assembly	13W-020 13W-025	Floor Pan Non Textile Floor-Covering	Repair of the Laminated Floor Pan Replacement of the Bonded Parts Material No. 08-082 Acrylic Pressure Sensitive Adhesive Film
13W-001 13W-080	Floor Pan Floor Panel Assembly	13W-090	Floor-Panel End Strip	Replacement of the Bonded Parts Material No. 08-010A Epoxy Resin and Hardener Adhesive
13W-001 13W-080	Floor Pan Floor Panel Assembly	13W-150	Sealing Section	Replacement of the Bonded Parts Material No. 08-006B Adhesive General Purpose

Table 3484
Reference list for the replacement of permanent installed parts

(a) Remove the screws 13W-040, 13W-060, 13W-260, the washers 13W-050, 13W-070, 13W-270 and the floor pan assembly 13W-010 from the floor panel assembly 13W-080, from the angles 13W-110, 13W-120 and from the lavatory structure.

(b) Remove the screws 13W-210 and the floor panel assembly 13W-080 from the lavatory structure.

(c) Disassemble the floor panel assembly 13W-080 as follows:

1 Remove the screws 13W-160 and the angles 13W-110, 13W-120 from the floor panel assembly 13W-080.

2 Remove the screws 13W-170, the washers 13W-185 and the angle 13W-130 from the floor panel assembly 13W-080.

SUB TASK 25-41-51-000-177-B01
D2549030701200

2. Removal of the Floor Pan (13W-1)

NOTE: **See TABLE 3485 for the references for the replacement procedures of permanent installed parts.**

More data for bonded parts are given in column SEE REPAIR TASK. Use the data for the selection of the related repair solution.

IPL FIG. ITEM	COMPONENT PART NAME	IPL FIG. ITEM	REPLACEMENT PART NAME	SEE REPAIR TASK
13W-001 13W-010	Floor Pan Floor Pan Assembly	13W-020 13W-030	Floor Pan Non Textile Floor-Covering	Repair of the Laminated Floor Pan Replacement of the Bonded Parts Material No. Scotch Grip 847
13W-001 13W-080	Floor Pan Floor Panel Assembly	13W-150	Sealing Section	Replacement of the Bonded Parts Material No. 08-006B Adhesive General Purpose

Table 3485
Reference list for the replacement of permanent installed parts

(a) Remove the screws 13W-040, 13W-060, 13W-260, the washers 13W-050, 13W-070, 13W-270 and the floor pan assembly 13W-010 from the floor panel assembly 13W-080, from the angles 13W-110, 13W-120 and from the lavatory structure.

(b) Remove the screws 13W-210 and the floor panel assembly 13W-080 from the lavatory structure.

(c) Disassemble the floor panel assembly 13W-080 as follows:

1 Remove the screws 13W-190, the washers 13W-180, the nuts 13W-200 and the angles 13W-140 from the floor panel assembly 13W-080.

2 Remove the screws 13W-160 and the angles 13W-110, 13W-120 from the floor panel assembly 13W-080.

3 Remove the screws 13W-170, the washers 13W-185 and the angle 13W-130 from the floor panel assembly 13W-080.

4 Remove the screws 13W-100 and the floor-panel end strip 13W-090 from the floor panel assembly 13W-080.

TASK 25-41-51-000-811-A01

D2547160900200 D2547160900400 D2547161903000 D2549010400000 D2549010400200
D2549010400400 D2549010400600 D2549010400800 D2549010401000 D2549010401400
D2549010402000 D2549010402200 D2549010402400 D2549010402600 D2549010402800
D2549010403000 D2549010403200 D2549010403400 D2549010403600 D2549010403800
D2549010404000 D2549010404200 D2549010404400 D2549010404600 D2549010404800
D2549010405000 D2549010405400 D2549010405800 D2549010406000 D2549010406200
D2549010406400 D2549010406800 D2549010407000 D2549010500000 D2549010500400
D2549010500600 D2549010500800 D2549010501000 D2549010501200 D2549010501400
D2549010501600 D2549010501800 D2549010502000 D2549010502200 D2549010502400
D2549010502600 D2549010502800 D2549010503200 D2549010503400 D2549010503600
D2549010503800 D2549010504200 D2549010504400 D2549010504600 D2549010504800
D2549010505000 D2549010505200 D2549010505400 D2549010505600 D2549010505800
D2549010506000 D2549010506200 D2549010506400 D2549010506800 D2549010507000
D2549010507200 D2549010507400 D2549010507600 D2549010507800 D2549010508000
D2549010508200 D2549010508400 D2549010508600 D2549010508800 D2549010509000
D2549010509200 D2549010509400 D2549010509600 D2549010509800 D2549010510000
D2549010510200 D2549010510400 D2549010510600 D2549010510800 D2549010511000
D2549010511200 D2549010511400 D2549010511600 D2549010511800 D2549010512000
D2549010512200 D2549010512400 D2549010512600 D2549010513000 D2549010513200
D2549010513400 D2549010513600 D2549010513800 D2549010514200 D2549010514400
D2549010514600 D2549010514800 D2549010600000 D2549010600400 D2549010600600
D2549010600800 D2549010601000 D2549010601200 D2549010601400 D2549010601600
D2549010601800 D2549010602000 D2549010602200 D2549010602400 D2549010602800
D2549010603000 D2549010603200 D2549010603400 D2549010603600 D2549010603800
D2549010604000 D2549010604200 D2549010604400 D2549010604600 D2549010604800
D2549010605000 D2549010605200 D2549010605600 D2549010605800 D2549010606000
D2549010606200 D2549010606400 D2549010606600 D2549010606800 D2549010607000
D2549010607200 D2549010607400 D2549010607600 D2549010607800 D2549010608200
D2549010608400 D2549010608600 D2549010608800 D2549010609000 D2549010609200
D2549010609400 D2549010609600 D2549010609800 D2549010610000 D2549010610400
D2549010610600 D2549010610800 D2549010611000 D2549010611200 D2549010611600
D2549010611800 D2549010612000 D2549010612200 D2549010612400 D2549010612600
D2549010613000 D2549010613400 D2549010613600 D2549010613800 D2549010614200
D2549010614400 D2549010614600 D2549010614800 D2549020300400 D2549020300600
D2549020300800 D2549020301000 D2549020301800 D2549020302000 D2549020302800
D2549020400000 D2549020400200 D2549020400400 D2549020400600 D2549020400800
D2549020401000 D2549020401200 D2549020401400 D2549020401600 D2549020402000
D2549020402200 D2549020402400 D2549020402600 D2549020403000 D2549020403200
D2549020403400 D2549020403600 D2549020403800 D2549020404000 D2549020404200
D2549020404400 D2549020404600 D2549020404800 D2549020405000 D2549020405200
D2549020405400 D2549020405600 D2549020405800 D2549020406000 D2549020406200
D2549020406400 D2549020406600 D2549020406800 D2549020407000 D2549020407200
D2549020407400 D2549020407600 D2549020407800 D2549020408000 D2549020408200
D2549020408600 D2549020408800 D2549020409000 D2549020409200 D2549020409400
D2549020409600 D2549020409800 D2549020410200 D2549020410400 D2549020410600
D2549020410800 D2549020411000 D2549020411400 D2549020411600 D2549020412600

D2549020412800 D2549020413000 D2549020413400 D2549020414200 D2549020500000
D2549020500200 D2549020500400 D2549020500600 D2549020500800 D2549020501000
D2549020501200 D2549020501400 D2549020501600 D2549020501800 D2549020502000
D2549020502200 D2549020502400 D2549020502600 D2549020502800 D2549020503000
D2549020503200 D2549020503400 D2549020503600 D2549020503800 D2549020504000
D2549020504200 D2549020504400 D2549020504600 D2549020504800 D2549020505000
D2549020505200 D2549020505400 D2549020505600 D2549020505800 D2549020506000
D2549020506200 D2549020506400 D2549020506600 D2549020506800 D2549020507000
D2549020507200 D2549020507400 D2549020507600 D2549020508000 D2549020508200
D2549020508400 D2549020508600 D2549020508800 D2549020509200 D2549020509600
D2549020509800 D2549020510000 D2549020510400 D2549020510800 D2549020511000
D2549020511200 D2549020511600 D2549020511800 D2549020512000 D2549020512200
D2549020512600 D2549020512800 D2549020513000 D2549020513200 D2549020513400
D2549020513800 D2549020514000 D2549020514200 D2549020514400 D2549020514600
D2549020514800 D2549020600000 D2549020600200 D2549020600400 D2549020600800
D2549020601000 D2549020601200 D2549020601400 D2549020601600 D2549020601800
D2549020602000 D2549020602200 D2549020602400 D2549020602600 D2549020602800
D2549020603000 D2549020603200 D2549020603400 D2549020603800 D2549020604200
D2549020604400 D2549020604600 D2549020604800 D2549020605000 D2549020605200
D2549020605400 D2549020605600 D2549020606000 D2549020606400 D2549020606600
D2549020606800 D2549020607000 D2549020607200 D2549020607400 D2549020607600
D2549020607800 D2549020608200 D2549020608400 D2549020608600 D2549020608800
D2549020609000 D2549020609200 D2549020609400 D2549020609600 D2549020609800
D2549020610000 D2549020610200 D2549020610400 D2549020610600 D2549020610800
D2549020611000 D2549020611200 D2549020611400 D2549020611600 D2549020611800
D2549020612000 D2549020612400 D2549020612600 D2549020612800 D2549020613000
D2549020613200 D2549020613600 D2549020613800 D2549020614000 D2549020614400
D2549020614600 D2549020614800 D2549020700200 D2549020700400 D2549020700600
D2549020700800 D2549020701000 D2549020701200 D2549020701400 D2549020701600
D2549020701800 D2549020702200 D2549020702400 D2549020702800 D2549020703200
D2549020703400 D2549020703600 D2549020703800 D2549020704000 D2549020704200
D2549020704400 D2549020704600 D2549020704800 D2549020705000 D2549020705200
D2549020705400 D2549020705600 D2549020705800 D2549020706000 D2549020706200
D2549020706400 D2549020706600 D2549020706800 D2549020707000 D2549020707200
D2549020707600 D2549020707800 D2549020708200 D2549020708600 D2549020708800
D2549020709000 D2549020709200 D2549020709600 D2549020709800 D2549020710200
D2549020710400 D2549020710600 D2549020710800 D2549020711000 D2549020711200
D2549020711400 D2549020711600 D2549020712000 D2549020712200 D2549020712400
D2549020712600 D2549020712800 D2549020713200 D2549020713400 D2549020713600
D2549020713800 D2549020714000 D2549020714600 D2549020800000 D2549020800200
D2549020800400 D2549020800600 D2549020800800 D2549020801000 D2549020801200
D2549020801400 D2549020801600 D2549020801800 D2549020802000 D2549020802200
D2549020802600 D2549020802800 D2549020803000 D2549020803200 D2549020803400
D2549020803600 D2549020803800 D2549020804000 D2549020804200 D2549020804400
D2549020804800 D2549020805000 D2549020805400 D2549020805600 D2549020805800
D2549020806000 D2549020806200 D2549020806600 D2549020806800 D2549020807000
D2549020807200 D2549020807600 D2549020807800 D2549020808200 D2549020808400

D2549020808600 D2549020808800 D2549020809000 D2549020809600 D2549020809800
D2549020810000 D2549020810200 D2549020810400 D2549020810600 D2549020810800
D2549020811200 D2549020811400 D2549020811600 D2549020811800 D2549020812000
D2549020812200 D2549020812400 D2549020812600 D2549020813000 D2549020813200
D2549020813400 D2549020813600 D2549020813800 D2549020814000 D2549020814200
D2549020814400 D2549020814600 D2549020814800 D2549030400000 D2549030400200
D2549030400400 D2549030400600 D2549030401000 D2549030401200 D2549030401400
D2549030401600 D2549030401800 D2549030402000 D2549030402400 D2549030402600
D2549030402800 D2549030403000 D2549030403400 D2549030403600 D2549030403800
D2549030404000 D2549030404200 D2549030404400 D2549030404600 D2549030404800
D2549030405000 D2549030405200 D2549030405600 D2549030405800 D2549030406000
D2549030406400 D2549030406600 D2549030406800 D2549030407000 D2549030407400
D2549030407600 D2549030407800 D2549030408000 D2549030408400 D2549030409000
D2549030409200 D2549030409800 D2549030410000 D2549030410400 D2549030411200
D2549030411400 D2549030411600 D2549030411800 D2549030412000 D2549030412400
D2549030412600 D2549030412800 D2549030413200 D2549030413600 D2549030414400
D2549030414800 D2549030500200 D2549030500400 D2549030500600 D2549030500800
D2549030501000 D2549030501200 D2549030501400 D2549030501600 D2549030501800
D2549030502000 D2549030502200 D2549030502400 D2549030502600 D2549030502800
D2549030503000 D2549030503200 D2549030503400 D2549030503600 D2549030503800
D2549030504000 D2549030504200 D2549030504600 D2549030504800 D2549030505200
D2549030505400 D2549030505600 D2549030505800 D2549030506000 D2549030506200
D2549030506400 D2549030506600 D2549030506800 D2549030507000 D2549030507200
D2549030507800 D2549030508000 D2549030508200 D2549030508400 D2549030508800
D2549030509000 D2549030509200 D2549030509400 D2549030509600 D2549030509800
D2549030510000 D2549030510400 D2549030510600 D2549030510800 D2549030511000
D2549030511200 D2549030511400 D2549030511600 D2549030512000 D2549030512200
D2549030512400 D2549030512800 D2549030513000 D2549030513400 D2549030513600
D2549030513800 D2549030514000 D2549030514200 D2549030514400 D2549030514600
D2549030514800 D2549030600000 D2549030600200 D2549030600600 D2549030601000
D2549030601200 D2549030601400 D2549030601800 D2549030602000 D2549030602200
D2549030602400 D2549030602600 D2549030602800 D2549030603200 D2549030603400
D2549030603800 D2549030604400 D2549030604600 D2549030604800 D2549030605000
D2549030605200 D2549030605400 D2549030605600 D2549030605800 D2549030606000
D2549030606200 D2549030606400 D2549030606600 D2549030606800 D2549030607000
D2549030607400 D2549030607600 D2549030608000 D2549030608200 D2549030608400
D2549030608600 D2549030608800 D2549030609000 D2549030609200 D2549030609800
D2549030610000 D2549030610200 D2549030610400 D2549030610600 D2549030611000
D2549030611200 D2549030611400 D2549030611600 D2549030611800 D2549030612000
D2549030612200 D2549030612400 D2549030612800 D2549030613200 D2549030613400
D2549030613600 D2549030613800 D2549030614000 D2549030614800 D2549030700200
D2549030700400 D2549030701000 D2549030701200 D2549030702600 D2549030703400
D2549030703600 D2549030705200 R225401107-000 R225401107-002 R225401107-004
R225401115-000 R225401115-002 R225401128-000 R225401133-000 R225401134-000
R225401134-002 R225401134-004 R225401134-006 R225401134-008 R225401134-010
R225401134-012 R225401134-014 R225401134-016 R225401134-018 R225401134-020
R225401134-022 R225401134-024 R225401134-026 R225401134-028 R225401134-030

R225401134-032 R225401134-034 R225401134-036 R225401134-038 R225401136-000
R225401136-004 R225401136-006 R225401136-010 R225401136-012 R225401136-016
R225401136-018 R225401136-020 R225401136-022 R225401136-024 R225401137-000
R225401137-002 R225401137-004 R225401137-006 R225401137-008 R225401137-010
R225401137-012 R225401137-014 R225401137-016 R225401139-000 R225401142-000
R225401142-002 R225401145-000 R225401145-002 R225401145-004 R225401145-006
R225401145-008 R225401145-010 R225401145-012 R225401145-014 R225401146-000
R225401146-002 R225401152-000 R225401152-002 R225401152-004 R225401152-006
R225401152-008 R225401152-010 R225401153-000 R225401159-000 R225401160-000
R225401160-002 R225401172-000 R225401172-002 R225401172-004 R225401172-006
R225401172-008 R225401172-010 R225401172-012 R225401172-014 R225401172-016
R225401172-018 R225401175-000 R225401176-000 R225401183-000 R225401183-002
R225401183-004 R225401183-006 R225401183-008 R225401188-000 R225401188-002
R225401188-004 R225401188-006 R225401192-000 R225401192-002 R225401195-000
R225401196-000 R225401196-002 R225401196-004 R225401196-006 R225401196-008
R225401196-010 R225401196-012 R225401196-014 R225401196-016 R225401196-018
R225401196-020 R225401196-022 R225401196-024 R225401196-034 R225401196-036
R225401196-038 R225401196-040 R225401196-042 R225401196-044 R225401196-046
R225401196-048 R225401196-050 R225401196-052 R225401196-054 R225401196-056
R225401196-058 R225401196-060 R225401196-062 R225401196-064 R225401196-066
R225401196-068 R225401196-070 R225401199-000 R225401199-002 R225401199-004
R225401199-006 R225401199-008 R225401199-010 R225401199-012 R225401600-000
R225401600-002 R225401600-004 R225401602-000 R225401603-000 R225401605-000
R225401605-002 R225401609-000 R225401611-000 R225401611-006 R225401611-008
R225401611-010 R225401611-012 R225401611-014 R225401611-016 R225401611-018
R225401613-000 R225401614-000 R225401618-000 R225401618-002 R225401619-000
R225401619-002 R225401622-000 R225401622-002 R225401624-000 R225401627-000
R225401627-002 R225401627-004 R225401629-000 R225401629-002 R225401639-000
R225401639-002 R225401643-000 R225401643-002 R225401643-004 R225401643-006
R225401643-008 R225401646-000 R225401646-002 R225401647-000 R225401648-000
R225401648-002 R225401648-004 R225401648-006 R225401648-008 R225401649-000
R225401656-000 R225401656-002 R225401658-000 R225401662-000 R225401662-002
R225401676-000 R225401683-000 R225401685-000 R225401685-002 R225401688-000
R225401689-004 R225401689-006 R225401693-000 R225401811-000

122. Removal and Disassembly of the Door Light

A. General

A complete disassembly of the component is not necessary and not recommended.

Do not disassemble the component more than it is necessary for:

- Cleaning
- Visual Inspection
- Replacement of defective parts.

B. Job Set-up Information
(1) Consumable Materials

REFERENCE	DESIGNATION
08-026	Adhesive/Sealant one Part, RTV Silicone Rubber

Table 3486
Consumable Materials

C. Procedure

WARNING: **BE CAREFUL WHEN YOU USE SOLVENTS/CLEANING AGENTS, SEALANTS AND OTHER MATERIALS. OBEY THE MATERIAL MANUFACTURER'S INSTRUCTIONS AND THE LOCAL REGULATIONS. MAKE SURE THAT THERE IS A GOOD FLOW OF AIR THROUGH THE WORK AREA. DO NOT BREATHE THE FUMES. DO NOT SMOKE. DO NOT USE THESE MATERIALS NEAR A FLAME, SPARKS OR SOURCES OF HEAT. USE PROTECTIVE CLOTHING, GOGGLES AND GLOVES. IF YOU GET ONE OF THESE MATERIALS ON YOUR SKIN OR IN YOUR EYES, FLUSH IT AWAY WITH A FLOW OF CLEAN WATER. IF YOU GET ONE OF THESE MATERIALS IN YOUR MOUTH, GET IMMEDIATE MEDICAL AID. IN GENERAL, THESE MATERIALS ARE POISONOUS, FLAMMABLE AND SKIN IRRITANTS.**

CAUTION: **DO ALL THE WORK ON A CLEAN, SOFT SURFACE TO PREVENT DAMAGE TO THE COMPONENTS.**

SUB TASK 25-41-51-040-002-A01
D2547161903000 D2549010500000 D2549010500400 D2549010500600
D2549010500800 D2549010501000 D2549010501200 D2549010501400
D2549010501600 D2549010501800 D2549010502000 D2549010502200
D2549010502400 D2549010502600 D2549010502800 D2549010503200
D2549010503400 D2549010503600 D2549010503800 D2549010504200
D2549010504400 D2549010504600 D2549010504800 D2549010505000
D2549010505200 D2549010505400 D2549010505600 D2549010505800
D2549010506000 D2549010506200 D2549010506400 D2549010506800
D2549010507000 D2549010507200 D2549010507400 D2549010507600
D2549010507800 D2549010508000 D2549010508200 D2549010508400
D2549010508600 D2549010508800 D2549010509000 D2549010509200
D2549010509400 D2549010509600 D2549010509800 D2549010510000

D2549010510200 D2549010510400 D2549010510800 D2549010511000 D2549010511200 D2549010511400 D2549010511600 D2549010511800 D2549010512000 D2549010512200 D2549010512400 D2549010513000 D2549010513200 D2549010513400 D2549010513600 D2549010513800 D2549020500000 D2549020500200 D2549020500400 D2549020500600 D2549020500800 D2549020501000 D2549020501200 D2549020501400 D2549020501600 D2549020501800 D2549020502000 D2549020502400 D2549020502600 D2549020502800 D2549020503000 D2549020503200 D2549020503400 D2549020503600 D2549020503800 D2549020504000 D2549020504200 D2549020504400 D2549020504600 D2549020504800 D2549020505000 D2549020505200 D2549020505400 D2549020505800 D2549020506000 D2549020506200 D2549020506400 D2549020600000 D2549020600200 D2549020600400 D2549020600800 D2549020601000 D2549020601200 D2549020601400 D2549020601600 D2549020601800 D2549020602000 D2549020602400 D2549020602600 D2549020602800 D2549020603000 D2549020603200 D2549020603400 D2549020603800 D2549020604200 D2549020604400 D2549020604600 D2549020604800 D2549020605000 D2549020605200 D2549020605400 D2549020605600 D2549020606000 D2549020606400 D2549020606600 D2549020606800 D2549020607000 D2549020607200 D2549020607400 D2549020607600 D2549020607800 D2549020608200 D2549020608400 D2549020608600 D2549020608800 D2549020609000 D2549020609200 D2549020609400 D2549020609600 D2549020609800 D2549020610000 D2549020610200 D2549020610400 D2549020610600 D2549020610800 D2549020611000 D2549020611200 D2549020611400 D2549020611600 D2549020611800 D2549020701200 D2549020703200 D2549020705400 D2549030500200 D2549030500400 D2549030500600 D2549030500800 D2549030501000 D2549030501200 D2549030501400 D2549030501600 D2549030501800 D2549030502000 D2549030502200 D2549030502400 D2549030502600 D2549030502800 D2549030503000 D2549030503200 D2549030503400 D2549030503600 D2549030504000 D2549030504600 D2549030504800 D2549030505200 D2549030505400 D2549030505600 D2549030505800 D2549030506000 D2549030506200 D2549030506400 D2549030506600 D2549030506800 D2549030507000 D2549030507200 R225401107-000 R225401107-002 R225401107-004 R225401115-002 R225401128-000 R225401133-000 R225401134-000 R225401134-002 R225401134-004 R225401136-016 R225401137-000 R225401137-002 R225401137-010 R225401137-012 R225401139-000 R225401145-000 R225401146-000 R225401146-002 R225401159-000 R225401160-002 R225401172-002 R225401175-000 R225401176-000 R225401188-000 R225401188-002 R225401188-004 R225401188-006

1. Removal and Disassembly of the Door Light (14-1)

NOTE: **See TABLE 3487 for the references for the replacement procedures of permanent installed parts.**

More data for bonded parts are given in column SEE REPAIR TASK. Use the data for the selection of the related repair solution.

IPL FIG. ITEM	COMPONENT PART NAME	IPL FIG. ITEM	REPLACEMENT PART NAME	SEE REPAIR TASK
14-001 14-010	Door Light Lamp Cover Assembly	14-020	Lens	Replacement of the Bonded Parts Material No. 08-026 Adhesive/Sealant one Part, RTV Silicone Rubber
14-001 14-010	Door Light Lamp Cover Assembly	14-030	Part of the Double-Spring Ball Catch	Replacement of the Riveted Parts

Table 3487
Reference list for the replacement of permanent installed parts

(a) Remove the lamp cover assembly 14-010 from the part of the double-spring ball catches 14-030.

(b) Remove the screws 14-040, the washers 14-050 and the part of the double-spring ball catches 14-030 from the lavatory structure.

(c) Remove the fluorescent lamp 14-090 from the ballast unit 14-100.

NOTE: **For further instructions, see CMMV 33-24-16_D1347 (ballast unit).**

(d) Remove the screws 14-070, 14-075, the washers 14-080 and the ballast unit 14-100 from the lavatory structure.

SUB TASK 25-41-51-040-002-B01

D2547160900200 D2547160900400 D2549010400000 D2549010400200
D2549010400400 D2549010400600 D2549010400800 D2549010401000
D2549010401400 D2549010402000 D2549010402200 D2549010402400
D2549010402600 D2549010402800 D2549010403000 D2549010403200
D2549010403400 D2549010403600 D2549010403800 D2549010404000
D2549010404200 D2549010404400 D2549010404600 D2549010404800
D2549010405000 D2549010405400 D2549010405800 D2549010406000
D2549010406200 D2549010406400 D2549010406800 D2549010407000
D2549010510600 D2549010512600 D2549010514200 D2549010514400

D2549010514600 D2549010514800 D2549010600000 D2549010600400
D2549010600600 D2549010600800 D2549010601000 D2549010601200
D2549010601400 D2549010601600 D2549010601800 D2549010602000
D2549010602200 D2549010602400 D2549010602800 D2549010603000
D2549010603200 D2549010603400 D2549010603600 D2549010603800
D2549010604000 D2549010604200 D2549010604400 D2549010604600
D2549010604800 D2549010605000 D2549010605200 D2549010605600
D2549010605800 D2549010606000 D2549010606200 D2549010606400
D2549010606600 D2549010606800 D2549010607000 D2549010607200
D2549010607400 D2549010607600 D2549010607800 D2549010608200
D2549010608400 D2549010608600 D2549010608800 D2549010609000
D2549010609200 D2549010609400 D2549010609600 D2549010609800
D2549010610000 D2549010610400 D2549010610600 D2549010610800
D2549010611000 D2549010611200 D2549010611600 D2549010611800
D2549010612000 D2549010612200 D2549010612400 D2549010612600
D2549010613000 D2549010613400 D2549010613600 D2549010613800
D2549010614200 D2549010614400 D2549010614600 D2549010614800
D2549020300400 D2549020300600 D2549020300800 D2549020301000
D2549020301800 D2549020302000 D2549020302800 D2549020400000
D2549020400200 D2549020400400 D2549020400600 D2549020400800
D2549020401000 D2549020401200 D2549020401400 D2549020401600
D2549020402000 D2549020402200 D2549020402400 D2549020402600
D2549020403000 D2549020403200 D2549020403400 D2549020403600
D2549020403800 D2549020404000 D2549020404200 D2549020404400
D2549020404600 D2549020404800 D2549020405000 D2549020405200
D2549020405400 D2549020405600 D2549020405800 D2549020406000
D2549020406200 D2549020406400 D2549020406600 D2549020406800
D2549020407000 D2549020407200 D2549020407400 D2549020407600
D2549020407800 D2549020408000 D2549020408200 D2549020408600
D2549020408800 D2549020409000 D2549020409200 D2549020409400
D2549020409600 D2549020409800 D2549020410200 D2549020410400
D2549020410600 D2549020410800 D2549020411000 D2549020411400
D2549020411600 D2549020412600 D2549020412800 D2549020413000
D2549020413400 D2549020414200 D2549020502200 D2549020505600
D2549020506600 D2549020506800 D2549020507000 D2549020507200
D2549020507400 D2549020507600 D2549020508000 D2549020508200
D2549020508400 D2549020508600 D2549020508800 D2549020509200
D2549020509600 D2549020509800 D2549020510000 D2549020510400
D2549020510800 D2549020511000 D2549020511200 D2549020511600
D2549020511800 D2549020512000 D2549020512200 D2549020512600
D2549020512800 D2549020513000 D2549020513200 D2549020513400
D2549020513800 D2549020514000 D2549020514200 D2549020514400
D2549020514600 D2549020514800 D2549020602200 D2549020612000
D2549020612400 D2549020612600 D2549020612800 D2549020613000
D2549020613200 D2549020613600 D2549020613800 D2549020614000
D2549020614400 D2549020614600 D2549020614800 D2549020700200
D2549020700400 D2549020700600 D2549020700800 D2549020701000

D2549020701400 D2549020701600 D2549020701800 D2549020702200
D2549020702400 D2549020702800 D2549020703400 D2549020703600
D2549020703800 D2549020704000 D2549020704200 D2549020704400
D2549020704600 D2549020704800 D2549020705000 D2549020705200
D2549020705600 D2549020705800 D2549020706000 D2549020706200
D2549020706400 D2549020706600 D2549020706800 D2549020707000
D2549020707200 D2549020707600 D2549020707800 D2549020708200
D2549020708600 D2549020708800 D2549020709000 D2549020709200
D2549020709600 D2549020709800 D2549020710200 D2549020710400
D2549020710600 D2549020710800 D2549020711000 D2549020711200
D2549020711400 D2549020711600 D2549020712000 D2549020712200
D2549020712400 D2549020712600 D2549020712800 D2549020713200
D2549020713400 D2549020713600 D2549020713800 D2549020714000
D2549020714600 D2549020800000 D2549020800200 D2549020800400
D2549020800600 D2549020800800 D2549020801000 D2549020801200
D2549020801400 D2549020801600 D2549020801800 D2549020802000
D2549020802200 D2549020802600 D2549020802800 D2549020803000
D2549020803200 D2549020803400 D2549020803600 D2549020803800
D2549020804000 D2549020804200 D2549020804400 D2549020804800
D2549020805000 D2549020805400 D2549020805600 D2549020805800
D2549020806000 D2549020806200 D2549020806600 D2549020806800
D2549020807000 D2549020807200 D2549020807600 D2549020807800
D2549020808200 D2549020808400 D2549020808600 D2549020808800
D2549020809000 D2549020809600 D2549020809800 D2549020810000
D2549020810200 D2549020810400 D2549020810600 D2549020810800
D2549020811200 D2549020811400 D2549020811600 D2549020811800
D2549020812000 D2549020812200 D2549020812400 D2549020812600
D2549020813000 D2549020813200 D2549020813400 D2549020813600
D2549020813800 D2549020814000 D2549020814200 D2549020814400
D2549020814600 D2549020814800 D2549030400000 D2549030400200
D2549030400400 D2549030400600 D2549030401000 D2549030401200
D2549030401400 D2549030401600 D2549030401800 D2549030402000
D2549030402400 D2549030402600 D2549030402800 D2549030403000
D2549030403400 D2549030403600 D2549030403800 D2549030404000
D2549030404200 D2549030404400 D2549030404600 D2549030404800
D2549030405000 D2549030405200 D2549030405600 D2549030405800
D2549030406000 D2549030406400 D2549030406600 D2549030406800
D2549030407000 D2549030407400 D2549030407600 D2549030407800
D2549030408000 D2549030408400 D2549030409000 D2549030409200
D2549030409800 D2549030410000 D2549030410400 D2549030411200
D2549030411400 D2549030411600 D2549030411800 D2549030412000
D2549030412400 D2549030412600 D2549030412800 D2549030413200
D2549030413600 D2549030414400 D2549030414800 D2549030503800
D2549030504200 D2549030507800 D2549030508000 D2549030508200
D2549030508400 D2549030508800 D2549030509000 D2549030509200
D2549030509400 D2549030509600 D2549030509800 D2549030510000
D2549030510400 D2549030510600 D2549030510800 D2549030511000

D2549030511200 D2549030511400 D2549030511600 D2549030512000
D2549030512200 D2549030512400 D2549030512800 D2549030513000
D2549030513400 D2549030513600 D2549030513800 D2549030514000
D2549030514200 D2549030514400 D2549030514600 D2549030514800
D2549030600000 D2549030600200 D2549030600600 D2549030601000
D2549030601200 D2549030601400 D2549030601800 D2549030602000
D2549030602200 D2549030602400 D2549030602600 D2549030602800
D2549030603200 D2549030603400 D2549030603800 D2549030604400
D2549030604600 D2549030604800 D2549030605000 D2549030605200
D2549030605400 D2549030605600 D2549030605800 D2549030606000
D2549030606200 D2549030606400 D2549030606600 D2549030606800
D2549030607000 D2549030607400 D2549030607600 D2549030608000
D2549030608200 D2549030608400 D2549030608600 D2549030608800
D2549030609000 D2549030609200 D2549030609800 D2549030610000
D2549030610200 D2549030610400 D2549030610600 D2549030611000
D2549030611200 D2549030611400 D2549030611600 D2549030611800
D2549030612000 D2549030612200 D2549030612400 D2549030612800
D2549030613200 D2549030613400 D2549030613600 D2549030613800
D2549030614000 D2549030614800 D2549030700200 D2549030700400
D2549030701000 D2549030701200 D2549030702600 D2549030703400
D2549030703600 D2549030705200 R225401115-000 R225401134-006 R225401134-
008 R225401134-010 R225401134-012 R225401134-014 R225401134-016 R225401134-
018 R225401134-020 R225401134-022 R225401134-024 R225401134-026 R225401134-
028 R225401134-030 R225401134-032 R225401134-034 R225401134-036 R225401134-
038 R225401136-000 R225401136-004 R225401136-006 R225401136-010 R225401136-
012 R225401136-018 R225401136-020 R225401136-022 R225401136-024 R225401137-
004 R225401137-006 R225401137-008 R225401137-014 R225401137-016 R225401142-
000 R225401142-002 R225401145-002 R225401145-004 R225401145-006 R225401145-
008 R225401145-010 R225401145-012 R225401145-014 R225401152-000 R225401152-
002 R225401152-004 R225401152-006 R225401152-008 R225401152-010 R225401153-
000 R225401160-000 R225401172-000 R225401172-004 R225401172-006 R225401172-
008 R225401172-010 R225401172-012 R225401172-014 R225401172-016 R225401172-
018 R225401183-000 R225401183-002 R225401183-004 R225401183-006 R225401183-
008 R225401192-000 R225401192-002 R225401195-000 R225401196-000 R225401196-
002 R225401196-004 R225401196-006 R225401196-008 R225401196-010 R225401196-
012 R225401196-014 R225401196-016 R225401196-018 R225401196-020 R225401196-
022 R225401196-024 R225401196-034 R225401196-036 R225401196-038 R225401196-
040 R225401196-042 R225401196-044 R225401199-000 R225401199-002 R225401199-
004 R225401199-006 R225401199-008 R225401199-010 R225401199-012
R225401600-000 R225401600-002 R225401600-004 R225401602-000 R225401603-
000 R225401605-000 R225401605-002 R225401609-000 R225401611-000
R225401611-006 R225401611-008 R225401611-010 R225401611-012 R225401611-014
R225401611-016 R225401611-018 R225401613-000 R225401614-000 R225401618-000
R225401618-002 R225401619-000 R225401619-002 R225401622-000 R225401622-
002 R225401624-000 R225401627-000 R225401627-002 R225401627-004
R225401629-000 R225401629-002 R225401639-000 R225401639-002 R225401643-
000 R225401643-002 R225401643-004 R225401643-006 R225401643-008

R225401646-000 R225401646-002 R225401647-000 R225401648-000 R225401648-002 R225401648-004 R225401648-006 R225401648-008 R225401649-000 R225401656-000 R225401656-002 R225401658-000 R225401662-000 R225401662-002 R225401676-000 R225401683-000 R225401685-000 R225401685-002 R225401688-000 R225401689-004 R225401689-006 R225401693-000 R225401811-000

2. Removal and Disassembly of the Door Light (14-1)

NOTE: **See TABLE 3488 for the references for the replacement procedures of permanent installed parts.**

More data for bonded parts are given in column SEE REPAIR TASK. Use the data for the selection of the related repair solution.

IPL FIG. ITEM	COMPONENT PART NAME	IPL FIG. ITEM	REPLACEMENT PART NAME	SEE REPAIR TASK
14-001 14-010	Door Light Lamp Cover Assembly	14-020	Lens	Replacement of the Bonded Parts Material No. 08-026 Adhesive/Sealant one Part, RTV Silicone Rubber
14-001 14-010	Door Light Lamp Cover Assembly	14-030	Part of the Double-Spring Ball Catch	Replacement of the Riveted Parts

Table 3488
Reference list for the replacement of permanent installed parts

(a) Remove the lamp cover assembly 14-010 from the part of the double-spring ball catches 14-030.

(b) Remove the screws 14-040, the washers 14-050 and the part of the double-spring ball catches 14-030 from the lavatory structure.

(c) Remove the fluorescent lamp 14-090 from the ballast unit 14-100.

NOTE: **For further instructions, see CMMV 33-24-16_D1347 (ballast unit).**

(d) Remove the screws 14-070, 14-075, the washers 14-080, the reflector 14-060 and the ballast unit 14-100 from the lavatory structure.

TASK 25-41-51-000-811-B01

D2549010401600 D2549010401800 D2549010405200 D2549010405600 D2549010514000
D2549010600200 D2549010602600 D2549010610200 D2549010611400 D2549010613200
D2549020300000 D2549020301600 D2549020411200 D2549020411800 D2549020412000
D2549020412200 D2549020412400 D2549020413200 D2549020413600 D2549020413800
D2549020414000 D2549020414600 D2549020414800 D2549020507800 D2549020509000
D2549020510600 D2549020512400 D2549020513600 D2549020603600 D2549020604000
D2549020605800 D2549020612200 D2549020700000 D2549020702000 D2549020702600
D2549020707400 D2549020708000 D2549020708400 D2549020709400 D2549020710000
D2549020713000 D2549020714400 D2549020802400 D2549020805200 D2549020806400
D2549020807400 D2549020809400 D2549020812800 D2549030402200 D2549030405400
D2549030407200 D2549030408200 D2549030408600 D2549030409400 D2549030410200
D2549030410600 D2549030412200 D2549030413000 D2549030413400 D2549030414000
D2549030414200 D2549030414600 D2549030507400 D2549030507600 D2549030508600
D2549030510200 D2549030511800 D2549030513200 D2549030600400 D2549030600800
D2549030601600 D2549030603000 D2549030603600 D2549030604200 D2549030607200
D2549030607800 D2549030612600 D2549030614200 D2549030614400 D2549030614600
D2549030700000 D2549030700600 D2549030700800 D2549030701400 D2549030701600
D2549030701800 D2549030702000 D2549030702200 D2549030702400 D2549030702800
D2549030703000 D2549030703200 D2549030703800 D2549030704000 D2549030704200
D2549030704400 D2549030704600 D2549030704800 D2549030705600 D2549040500200
D2549040500400 D2549040500600 D2549040500800 D2549040501000 D2549040501200
D2549040501400 D2549040501600 D2549040501800 D2549040502000 R225401136-008
R225401136-014 R225401168-000 R225401168-002 R225401168-004 R225401168-006
R225401168-008 R225401168-010 R225401168-012 R225401168-014 R225401168-016
R225401168-018 R225401168-020 R225401168-022 R225401168-024 R225401168-026
R225401168-028 R225401175-002 R225401611-020 R225401625-000 R225401671-000
R225401671-002 R225401673-000 R225401673-002 R225401673-004 R225401673-006
R225401675-000 R225401691-000 R225401691-002 R225401697-000 R225401697-002
R225401803-000 R225401803-002 R225401808-000 R225401814-000

123. Removal and Disassembly of the Door Light

A. General

A complete disassembly of the component is not necessary and not recommended.

Do not disassemble the component more than it is necessary for:

- Cleaning
- Visual Inspection
- Replacement of defective parts.

B. Job Set-up Information

(1) Consumable Materials

REFERENCE	DESIGNATION
08-026	Adhesive/Sealant one Part, RTV Silicone Rubber

Table 3489
Consumable Materials

C. Procedure

WARNING: **BE CAREFUL WHEN YOU USE SOLVENTS/CLEANING AGENTS, SEALANTS AND OTHER MATERIALS. OBEY THE MATERIAL MANUFACTURER'S INSTRUCTIONS AND THE LOCAL REGULATIONS. MAKE SURE THAT THERE IS A GOOD FLOW OF AIR THROUGH THE WORK AREA. DO NOT BREATHE THE FUMES. DO NOT SMOKE. DO NOT USE THESE MATERIALS NEAR A FLAME, SPARKS OR SOURCES OF HEAT. USE PROTECTIVE CLOTHING, GOGGLES AND GLOVES. IF YOU GET ONE OF THESE MATERIALS ON YOUR SKIN OR IN YOUR EYES, FLUSH IT AWAY WITH A FLOW OF CLEAN WATER. IF YOU GET ONE OF THESE MATERIALS IN YOUR MOUTH, GET IMMEDIATE MEDICAL AID. IN GENERAL, THESE MATERIALS ARE POISONOUS, FLAMMABLE AND SKIN IRRITANTS.**

CAUTION: **DO ALL THE WORK ON A CLEAN, SOFT SURFACE TO PREVENT DAMAGE TO THE COMPONENTS.**

SUB TASK 25-41-51-040-003-A01

D2549010401600 D2549010401800 D2549010514000 D2549010600200 D2549010602600 D2549010610200 D2549010611400 D2549010613200 D2549020300000 D2549020411800 D2549020509000 D2549020510600 D2549020512400 D2549020513600 D2549020612200 D2549020700000 D2549020702000 D2549020702600 D2549020707400 D2549020708000 D2549020709400 D2549020710000 D2549020713000 D2549020714400 D2549020802400 D2549020805200 D2549020806400 D2549020807400 D2549020809400 D2549030402200 D2549030405400 D2549030407200 D2549030408200 D2549030408600 D2549030409400 D2549030410200 D2549030410600 D2549030412200 D2549030413400 D2549030507400 D2549030507600 D2549030508600 D2549030510200 D2549030511800 D2549030513200 D2549030600400 D2549030600800 D2549030601600 D2549030603000 D2549030603600 D2549030604200 D2549030607200 D2549030607800 D2549030612600 D2549030614200 D2549030614400 D2549030614600 D2549030704200 D2549030704400 R225401168-000 R225401168-002 R225401168-004 R225401168-006 R225401168-008 R225401168-010 R225401168-012 R225401168-014 R225401168-016 R225401168-018 R225401168-020 R225401168-

022 R225401168-024 R225401168-026 R225401168-028 R225401175-002 R225401625-000 R225401675-000

1. Removal and Disassembly of the Door Light (14A-1)

NOTE: **See TABLE 3490 for the references for the replacement procedures of permanent installed parts.**

More data for bonded parts are given in column SEE REPAIR TASK. Use the data for the selection of the related repair solution.

IPL FIG. ITEM	COMPONENT PART NAME	IPL FIG. ITEM	REPLACEMENT PART NAME	SEE REPAIR TASK
14A-001 14A-010	Door Light Lamp Cover Assembly	14A-020	Lens	Replacement of the Bonded Parts Material No. 08-026 Adhesive/Sealant one Part, RTV Silicone Rubber
14A-001 14A-010	Door Light Lamp Cover Assembly	14A-030	Part of the Double-Spring Ball Catch	Replacement of the Riveted Parts

Table 3490
Reference list for the replacement of permanent installed parts

(a) Remove the lamp cover assembly 14A-010 from the part of the double-spring ball catches 14A-030.

(b) Remove the screws 14A-040, the washers 14A-050 and the part of the double-spring ball catches 14A-030 from the lavatory structure.

(c) Remove the fluorescent lamp 14A-090 from the ballast unit 14A-100.

NOTE: **For further instructions, see CMMV 33-24-16_D1347 (ballast unit).**

(d) Remove the screws 14A-070, 14A-075, the washers 14A-080, the reflector 14A-060 and the ballast unit 14A-100 from the lavatory structure.

SUB TASK 25-41-51-040-003-B01
D2549010405200 D2549010405600 D2549020301600 D2549020411200 D2549020412000 D2549020412200 D2549020412400 D2549020413200 D2549020413600 D2549020413800 D2549020414000 D2549020414600 D2549020414800 D2549020507800 D2549020603600 D2549020604000

D2549020605800 D2549020708400 D2549020812800 D2549030413000 D2549030414000 D2549030414200 D2549030414600 D2549030700000 D2549030700600 D2549030700800 D2549030701400 D2549030701600 D2549030701800 D2549030702000 D2549030702200 D2549030702400 D2549030702800 D2549030703000 D2549030703200 D2549030703800 D2549030704000 D2549030704600 D2549030704800 D2549030705600 D2549040500200 D2549040500400 D2549040500600 D2549040500800 D2549040501000 D2549040501200 D2549040501400 D2549040501600 D2549040501800 D2549040502000 R225401136-008 R225401136-014 R225401611-020 R225401671-000 R225401671-002 R225401673-000 R225401673-002 R225401673-004 R225401673-006 R225401691-000 R225401691-002 R225401697-000 R225401697-002 R225401803-000 R225401803-002 R225401808-000 R225401814-000

2. Removal and Disassembly of the Door Light (14A-1)

NOTE: **See TABLE 3491 for the references for the replacement procedures of permanent installed parts.**

More data for bonded parts are given in column SEE REPAIR TASK. Use the data for the selection of the related repair solution.

IPL FIG. ITEM	COMPONENT PART NAME	IPL FIG. ITEM	REPLACEMENT PART NAME	SEE REPAIR TASK
14A-001 14A-010	Door Light Lamp Cover Assembly	14A-020	Lens	Replacement of the Bonded Parts Material No. 08-026 Adhesive/Sealant one Part, RTV Silicone Rubber
14A-001 14A-010	Door Light Lamp Cover Assembly	14A-030	Part of the Double-Spring Ball Catch	Replacement of the Riveted Parts

Table 3491
Reference list for the replacement of permanent installed parts

(a) Remove the lamp cover assembly 14A-010 from the part of the double-spring ball catches 14A-030.

(b) Remove the screws 14A-040, the washers 14A-050 and the part of the double-spring ball catches 14A-030 from the lavatory structure.

(c) Remove the fluorescent lamp 14A-090 from the advanced integrated ballast unit 14A-100.

NOTE: For further instructions, see CMMV 33-24-18_D1347 (advanced integrated ballast unit).

(d) Remove the screws 14A-070, 14A-075, the washers 14A-080, the spacers 14A-110, 14A-120, the reflector 14A-060 and the advanced integrated ballast unit 14A-100 from the lavatory structure.

TASK 25-41-51-000-811-C01
D2549030409600 D2549030410800

124. Removal and Disassembly of the Door Light

A. General

A complete disassembly of the component is not necessary and not recommended.

Do not disassemble the component more than it is necessary for:

- Cleaning
- Visual Inspection
- Replacement of defective parts.

B. Job Set-up Information
(1) Consumable Materials

REFERENCE	DESIGNATION
08-026	Adhesive/Sealant one Part, RTV Silicone Rubber

Table 3492
Consumable Materials

C. Procedure

WARNING: **BE CAREFUL WHEN YOU USE SOLVENTS/CLEANING AGENTS, SEALANTS AND OTHER MATERIALS. OBEY THE MATERIAL MANUFACTURER'S INSTRUCTIONS AND THE LOCAL REGULATIONS. MAKE SURE THAT THERE IS A GOOD FLOW OF AIR THROUGH THE WORK AREA. DO NOT BREATHE THE FUMES. DO NOT SMOKE. DO NOT USE THESE MATERIALS NEAR A FLAME, SPARKS OR SOURCES OF HEAT. USE PROTECTIVE CLOTHING, GOGGLES AND GLOVES. IF YOU GET ONE OF THESE MATERIALS ON YOUR SKIN OR IN YOUR EYES, FLUSH IT AWAY WITH A FLOW OF CLEAN WATER. IF YOU GET ONE OF THESE MATERIALS IN YOUR MOUTH, GET IMMEDIATE MEDICAL AID. IN GENERAL, THESE MATERIALS ARE POISONOUS, FLAMMABLE AND SKIN IRRITANTS.**

CAUTION: **DO ALL THE WORK ON A CLEAN, SOFT SURFACE TO PREVENT DAMAGE TO THE COMPONENTS.**

SUB TASK 25-41-51-040-004-A01

1. Removal and Disassembly of the Door Light (14B-1)

NOTE: **See TABLE 3493 for the references for the replacement procedures of permanent installed parts.**

More data for bonded parts are given in column SEE REPAIR TASK. Use the data for the selection of the related repair solution.

IPL FIG. ITEM	COMPONENT PART NAME	IPL FIG. ITEM	REPLACEMENT PART NAME	SEE REPAIR TASK
14B-001 14B-010	Door Light Lamp Cover Assembly	14B-020	Lens	Replacement of the Bonded Parts Material No. 08-026 Adhesive/Sealant one Part, RTV Silicone Rubber
14B-001 14B-010	Door Light Lamp Cover Assembly	14B-030	Part of the Double-Spring Ball Catch	Replacement of the Riveted Parts

Table 3493
Reference list for the replacement of permanent installed parts

(a) Remove the lamp cover assembly 14B-010 from the part of the double-spring ball catches 14B-030.

(b) Remove the screws 14B-040, the washers 14B-050 and the part of the double-spring ball catches 14B-030 from the lavatory structure.

(c) Remove the fluorescent lamp 14B-090 from the advanced integrated ballast unit 14B-100.

NOTE: **For further instructions, see CMMV 33-24-18_D1347 (advanced integrated ballast unit).**

(d) Remove the screws 14B-070, the washers 14B-080, the spacers 14B-110, 14B-120, the reflector 14B-060 and the advanced integrated ballast unit 14B-100 from the lavatory structure.

TASK 25-41-51-000-811-D01
R225401196-046 R225401196-048 R225401196-050 R225401196-052 R225401196-054 R225401196-056 R225401196-058 R225401196-060 R225401196-062 R225401196-064 R225401196-066 R225401196-068 R225401196-070

125. Removal and Disassembly of the Door Light

A. General

A complete disassembly of the component is not necessary and not recommended.

Do not disassemble the component more than it is necessary for:

- Cleaning
- Visual Inspection
- Replacement of defective parts.

B. Job Set-up Information
(1) Consumable Materials

REFERENCE	DESIGNATION
08-026	Adhesive/Sealant one Part, RTV Silicone Rubber

Table 3494
Consumable Materials

C. Procedure

WARNING: **BE CAREFUL WHEN YOU USE SOLVENTS/CLEANING AGENTS, SEALANTS AND OTHER MATERIALS. OBEY THE MATERIAL MANUFACTURER'S INSTRUCTIONS AND THE LOCAL REGULATIONS. MAKE SURE THAT THERE IS A GOOD FLOW OF AIR THROUGH THE WORK AREA. DO NOT BREATHE THE FUMES. DO NOT SMOKE. DO NOT USE THESE MATERIALS NEAR A FLAME, SPARKS OR SOURCES OF HEAT. USE PROTECTIVE CLOTHING, GOGGLES AND GLOVES. IF YOU GET ONE OF THESE MATERIALS ON YOUR SKIN OR IN YOUR EYES, FLUSH IT AWAY WITH A FLOW OF CLEAN WATER. IF YOU GET ONE OF THESE MATERIALS IN YOUR MOUTH, GET IMMEDIATE MEDICAL AID. IN GENERAL, THESE MATERIALS ARE POISONOUS, FLAMMABLE AND SKIN IRRITANTS.**

CAUTION: **DO ALL THE WORK ON A CLEAN, SOFT SURFACE TO PREVENT DAMAGE TO THE COMPONENTS.**

SUB TASK 25-41-51-040-005-A01

R225401196-046 R225401196-048 R225401196-050 R225401196-052 R225401196-054 R225401196-056 R225401196-058 R225401196-060 R225401196-062 R225401196-064 R225401196-066 R225401196-068 R225401196-070

1. Removal and Disassembly of the Door Light (14C-1)

NOTE: **See TABLE 3487 for the references for the replacement procedures of permanent installed parts.**

More data for bonded parts are given in column SEE REPAIR TASK. Use the data for the selection of the related repair solution.

IPL FIG. ITEM	COMPONENT PART NAME	IPL FIG. ITEM	REPLACEMENT PART NAME	SEE REPAIR TASK
14C-001 14C-010	Door Light Lamp Cover Assembly	14C-020	Lens	Replacement of the Bonded Parts Material No. 08-026 Adhesive/Sealant one Part, RTV Silicone Rubber
14C-001 14C-010	Door Light Lamp Cover Assembly	14C-030	Part of the Double-Spring Ball Catch	Replacement of the Riveted Parts

Table 3495
Reference list for the replacement of permanent installed parts

(a) Remove the lamp cover assembly 14C-010 from the part of the double-spring ball catches 14C-030.

(b) Remove the screws 14C-080, the washers 14C-090 and the part of the double-spring ball catches 14C-030 from the lavatory structure.

(c) Remove the screws 14C-100, the washers 14C-110 and the brackets 14C-070.

(d) Remove the cledu cable 14C-040.

(e) Remove the cledu 14C-060 and the tie cable 14C-50.

TASK 25-41-51-000-812-A01

D2549010500000 D2549010500600 D2549010500800 D2549010501000 D2549010501200 D2549010501400 D2549010501600 D2549010501800 D2549010502000 D2549010502200 D2549010502400 D2549010502600 D2549010502800 D2549010503200 D2549010503400 D2549010503600 D2549010503800 D2549010504200 D2549010504400 D2549010504600 D2549010504800 D2549010505000 D2549010505200 D2549010505400 D2549010505600 D2549010505800 D2549010506000 D2549010506200 D2549010506400 D2549010506800 D2549010507000 D2549010507200 D2549010507400 D2549010507600 D2549010507800 D2549010508000 D2549010508200 D2549010508400 D2549010508600 D2549010508800 D2549010509200 D2549010511200 D2549020500200 D2549020500400 D2549020500800 D2549020501200 D2549020501600 D2549020501800 D2549020502000 D2549020502400 D2549020502600 D2549020503000 D2549020503400 D2549020503600 D2549020503800 D2549020504000 D2549020504200 D2549020504400 D2549020504600 D2549020505000 D2549020505400 D2549020505800 D2549020600000 D2549020600200 D2549020600400 D2549020600800 D2549020601000 D2549020601200 D2549020601400 D2549020601600 D2549020601800 D2549020602000 D2549020602400 D2549020602600 D2549020602800 D2549020603000 D2549020603200 D2549020603400 D2549020603800 D2549020606400 D2549020606600 D2549020607200 D2549030500200 D2549030500400 D2549030500600 D2549030500800 D2549030501000 D2549030501200 D2549030501400 D2549030501600 D2549030502000 D2549030502200 D2549030502600 D2549030502800 D2549030503000 D2549030503200 D2549030503400 D2549030503600 R225401107-000 R225401107-002 R225401115-002 R225401128-000 R225401133-000 R225401134-000 R225401139-000 R225401145-000 R225401146-000 R225401146-002 R225401188-000 R225401188-002 R225401188-004 R225401188-006

126. Removal and Disassembly of the Washbasin Unit

A. General

A complete disassembly of the component is not necessary and not recommended.

Do not disassemble the component more than it is necessary for:

- Cleaning
- Visual Inspection
- Replacement of defective parts.

B. Job Set-up Information

(1) Not applicable

C. Procedure

WARNING: **BE CAREFUL WHEN YOU USE SOLVENTS/CLEANING AGENTS, SEALANTS AND OTHER MATERIALS. OBEY THE MATERIAL MANUFACTURER'S INSTRUCTIONS AND THE LOCAL REGULATIONS. MAKE SURE THAT THERE IS A GOOD FLOW OF AIR THROUGH THE WORK AREA. DO NOT BREATHE THE FUMES. DO NOT SMOKE. DO NOT USE THESE MATERIALS NEAR A FLAME, SPARKS OR SOURCES OF HEAT. USE PROTECTIVE CLOTHING, GOGGLES AND GLOVES. IF YOU GET ONE OF THESE MATERIALS ON YOUR SKIN OR IN YOUR EYES, FLUSH IT AWAY WITH A FLOW OF CLEAN WATER. IF YOU GET ONE OF THESE MATERIALS IN YOUR MOUTH, GET IMMEDIATE MEDICAL AID. IN GENERAL, THESE MATERIALS ARE POISONOUS, FLAMMABLE AND SKIN IRRITANTS.**

CAUTION: **DO ALL THE WORK ON A CLEAN, SOFT SURFACE TO PREVENT DAMAGE TO THE COMPONENTS.**

SUB TASK 25-41-51-040-005-A01

D2549020602800 D2549020603200 D2549030502600 D2549030503400 R225401134-000 R225401188-006

1. Removal and Disassembly of the Washbasin Unit (15-1)

   (a) Remove the ground cable from the washbasin assembly 15-080.

   (b) Remove the screw 15-050, the washer 15-035, the nut 15-060 and the washbasin assembly 15-080 from the bracket 15-040.

   (c) Remove the screws 15-020, 15-022, 15-026, the washers 15-035, the rear cover 15-090 and the washbasin assembly 15-080 from the lavatory structure.

   (d) Disassemble the washbasin assembly 15-080 as follows:

      1 Remove the screws 15-160, the washers 15-170, the nuts 15-180 and the flap assembly 15-110 from the washbasin 15-100.

      2 Disassemble the flap assembly 15-110 as follows:
      a

         WARNING: **BE VERY CAREFUL WHEN YOU REMOVE OR INSTALL THE SPRING. BECAUSE THERE IS REMAINING TENSION IN THE SPRING, IT CAN CAUSE YOU INJURY.**

         Remove the splints 15-140, the pins 15-130, the springs 15-150 and the flap 15-120.

(e) Remove the screws 15-020, the washers 15-030 and the bracket 15-040 from the lavatory structure.

SUB TASK 25-41-51-040-005-B01

D2549010500000 D2549010500600 D2549010500800 D2549010501000
D2549010501200 D2549010501400 D2549010501600 D2549010501800
D2549010502000 D2549010502200 D2549010502600 D2549010502800
D2549010503200 D2549010503400 D2549010503600 D2549010503800
D2549010504200 D2549010504400 D2549010504600 D2549010504800
D2549010505000 D2549010505200 D2549010505400 D2549010505800
D2549010506000 D2549010506200 D2549010506400 D2549010506800
D2549010507000 D2549010507200 D2549010507400 D2549010507600
D2549010508000 D2549010508200 D2549010508400 D2549010508600
D2549010508800 D2549010509200 D2549010511200 D2549020500200
D2549020500400 D2549020500800 D2549020501200 D2549020501600
D2549020501800 D2549020502000 D2549020502400 D2549020502600
D2549020503000 D2549020503400 D2549020503600 D2549020503800
D2549020504000 D2549020504200 D2549020504400 D2549020504600
D2549020505000 D2549020505400 D2549020505800 D2549020600000
D2549020600200 D2549020600800 D2549020601000 D2549020601200
D2549020601400 D2549020601600 D2549020601800 D2549020602000
D2549020602400 D2549020602600 D2549020603400 D2549020603800
D2549020606400 D2549020606600 D2549020607200 D2549030500200
D2549030500400 D2549030500600 D2549030500800 D2549030501000
D2549030501200 D2549030501400 D2549030501600 D2549030502000
D2549030502200 D2549030502800 D2549030503000 D2549030503200
D2549030503600 R225401107-000 R225401107-002 R225401115-002 R225401133-000
R225401139-000 R225401145-000 R225401146-000 R225401146-002 R225401188-000
R225401188-002 R225401188-004

2. Removal and Disassembly of the Washbasin Unit (15-1)

(a) Remove the liquid soap dispenser 15-070 from the washbasin 15-100.

NOTE: For further instructions, see CMMV 25-40-01_120C2 (liquid soap dispenser).

(b) Remove the ground cable from the washbasin assembly 15-080.

(c) Remove the lock pins 15-088, the bolts 15-084, the washers 15-086 and the damper 15-082.

(d) Remove the screw 15-050, the washer 15-035, the nut 15-060 and the washbasin assembly 15-080 from the bracket 15-040.

(e) Remove the screw 15-050, the washer 15-035, the nut 15-060 and the washbasin assembly 15-080 from the bracket 15-040.

(f) Disassemble the washbasin assembly 15-080 as follows:

1 Remove the screws 15-160, the washers 15-170, the nuts 15-180 and the flap assembly 15-110 from the washbasin 15-100.

2 Disassemble the flap assembly 15-110 as follows:
a

WARNING: BE VERY CAREFUL WHEN YOU REMOVE OR INSTALL THE SPRING. BECAUSE THERE IS REMAINING TENSION IN THE SPRING, IT CAN CAUSE YOU INJURY.

Remove the splints 15-140, the pins 15-130, the springs 15-150 and the flap 15-120.

(g) Remove the screws 15-020, the washers 15-030 and the bracket 15-040 from the lavatory structure.

SUB TASK 25-41-51-040-005-C01
D2549010502400 D2549010505600 D2549010507800 D2549020600400 D2549020603000 R225401128-000

3. Removal and Disassembly of the Washbasin Unit (15-1)

(a) Remove the liquid soap dispenser 15-070 from the washbasin 15-100.

NOTE: For further instructions, see CMMV 25-40-01_120C2 (liquid soap dispenser).

(b) Remove the ground cable from the retrofitted washbasin 15-080.

(c) Remove the screw 15-050, the washer 15-035, the nut 15-060 and the retrofitted washbasin 15-080 from the bracket 15-040.

(d) Remove the screws 15-020, the washers 15-035, the rear cover 15-090 and the retrofitted washbasin 15-080 from the lavatory structure.

(e) Remove the screw 15-200, the washer 15-210 and the cover cap 15-190 from the rear cover 15-090.

(f) Disassemble the retrofitted washbasin 15-080 as follows:

1 Remove the screws 15-160, the washers 15-170, the nuts 15-180 and the flap assembly 15-110 from the washbasin 15-100.

2 Disassemble the flap assembly 15-110 as follows:
a

WARNING: BE VERY CAREFUL WHEN YOU REMOVE OR INSTALL THE SPRING. BECAUSE THERE IS REMAINING TENSION IN THE SPRING, IT CAN CAUSE YOU INJURY.

Remove the splints 15-140, the pins 15-130, the springs 15-150 and the flap 15-120.

(g) Remove the screws 15-020, the washers 15-030 and the bracket 15-040 from the lavatory structure.

TASK 25-41-51-000-812-B01
D2549010500400 D2549020500000 D2549020500600 D2549020501000 D2549020501400 D2549020502800 D2549020503200 D2549020504800 D2549020505200 D2549020506000 D2549030501800 D2549030502400

127. Removal and Disassembly of the Washbasin Unit

A. General

A complete disassembly of the component is not necessary and not recommended.

Do not disassemble the component more than it is necessary for:

- Cleaning
- Visual Inspection
- Replacement of defective parts.

B. Procedure

WARNING: BE CAREFUL WHEN YOU USE SOLVENTS/CLEANING AGENTS, SEALANTS AND OTHER MATERIALS. OBEY THE MATERIAL MANUFACTURER'S INSTRUCTIONS AND THE LOCAL REGULATIONS. MAKE SURE THAT THERE IS A GOOD FLOW OF AIR THROUGH THE WORK AREA. DO NOT BREATHE THE FUMES. DO NOT SMOKE. DO NOT USE THESE MATERIALS NEAR A FLAME, SPARKS OR SOURCES OF HEAT. USE PROTECTIVE CLOTHING, GOGGLES AND GLOVES. IF YOU GET ONE OF THESE MATERIALS ON YOUR SKIN OR IN YOUR EYES, FLUSH IT AWAY WITH A FLOW OF CLEAN WATER. IF YOU GET ONE OF THESE MATERIALS IN YOUR MOUTH, GET IMMEDIATE MEDICAL AID. IN GENERAL, THESE MATERIALS ARE POISONOUS, FLAMMABLE AND SKIN IRRITANTS.

CAUTION: DO ALL THE WORK ON A CLEAN, SOFT SURFACE TO PREVENT DAMAGE TO THE COMPONENTS.

SUB TASK 25-41-51-040-006-A01

1. Removal and Disassembly of the Washbasin Unit (15A-1)

(a) Remove the liquid soap dispenser 15A-080 and the liquid soap dispenser support 15A-070 from the washbasin 15A-110.

(b) Remove the liquid soap dispenser 15A-080 from the liquid soap dispenser support 15A-070.

(c) Remove the ground cable from the washbasin assembly 15A-090.

(d) Remove the screw 15A-050, the washer 15A-035, the nut 15A-060 and the washbasin assembly 15A-090 from the bracket 15A-040.

(e) Remove the screws 15A-020, the washers 15A-035, the rear cover 15A-100 and the washbasin assembly 15A-090 from the lavatory structure.

(f) Disassemble the washbasin assembly 15A-090 as follows:

1 Remove the screws 15A-170, the washers 15A-180, the nuts 15A-190 and the flap assembly 15A-120 from the washbasin 15A-110.

2 Disassemble the flap assembly 15A-120 as follows:
a

WARNING: BE VERY CAREFUL WHEN YOU REMOVE OR INSTALL THE SPRING. BECAUSE THERE IS REMAINING TENSION IN THE SPRING, IT CAN CAUSE YOU INJURY.

Remove the splints 15A-150, the pins 15A-140, the springs 15A-160 and the flap 15A-130.

(g) Remove the screws 15A-020, the washers 15A-030 and the bracket 15A-040 from the lavatory structure.

TASK 25-41-51-000-812-C01
D2549020603600 D2549020604000

128. Removal and Disassembly of the Washbasin Unit

A. General

A complete disassembly of the component is not necessary and not recommended.

Do not disassemble the component more than it is necessary for:

- Cleaning
- Visual Inspection
- Replacement of defective parts.

B. Job Set-up Information

(1) Not applicable

C. Procedure

WARNING: BE CAREFUL WHEN YOU USE SOLVENTS/CLEANING AGENTS, SEALANTS AND OTHER MATERIALS. OBEY THE MATERIAL MANUFACTURER'S INSTRUCTIONS AND THE LOCAL REGULATIONS. MAKE SURE THAT THERE IS A GOOD FLOW OF AIR THROUGH THE WORK AREA. DO NOT BREATHE THE FUMES. DO NOT SMOKE. DO NOT USE THESE MATERIALS NEAR A FLAME, SPARKS OR SOURCES OF HEAT. USE PROTECTIVE CLOTHING, GOGGLES AND GLOVES. IF YOU GET ONE OF THESE MATERIALS ON YOUR SKIN OR IN YOUR EYES, FLUSH IT AWAY WITH A FLOW OF CLEAN WATER. IF YOU GET ONE OF THESE MATERIALS IN YOUR MOUTH, GET IMMEDIATE MEDICAL AID. IN GENERAL, THESE MATERIALS ARE POISONOUS, FLAMMABLE AND SKIN IRRITANTS.

CAUTION: DO ALL THE WORK ON A CLEAN, SOFT SURFACE TO PREVENT DAMAGE TO THE COMPONENTS.

SUB TASK 25-41-51-040-007-A01

1. Removal and Disassembly of the Washbasin Unit (15B-1), (18-1)

(a) Remove the liquid soap dispenser 15B-170 from the washbasin assembly 15B-010.

NOTE: For further instructions, see CMMV 25-40-01_120C2 (liquid soap dispenser).

WARNING: **BE SURE THAT THE LOAD IS RELEASED BEFORE YOU REMOVE THE COMPONENT.**

(b) Remove the lock pins 15B-120, the bolts 15B-100, the washers 15B-110 and the damper 15B-090 from the waste flap assembly 15B-015 and from the waste chute 18-010.

(c) Discard the lock pins 15B-120.

(d) Remove the ground cable from the washbasin assembly 15B-010.

(e) Remove the screws 15B-130, the washers 15B-140 and the washbasin assembly 15B-010 from the washbasin unit bracket 15B-150.

(f) Remove the screws 15B-130, the washers 15B-140 and the washbasin assembly 15B-010 from the lavatory structure.

(g) Remove the screw 15B-210, the washer 15B-220 and the cover cap 15B-200 from the washbasin assembly 15B-010.

(h) Disassemble the washbasin assembly 15B-010 as follows:

1 Remove the screws 15B-065, the washers 15B-070, the clip nuts 15B-075 and the waste flap assembly 15B-015.

2 Disassemble the waste flap assembly 15B-015 as follows:

a Remove the screws 15B-025, the washers 15B-030 and the flap 15B-020 from the flap hinge half 15B-040.

b Disassemble the hinge assembly 15B-035 as follows:

WARNING: **BE VERY CAREFUL WHEN YOU REMOVE OR INSTALL THE SPRING. BECAUSE THERE IS REMAINING TENSION IN THE SPRING, IT CAN CAUSE YOU INJURY.**

Remove the retaining rings 15B-060, the axle 15B-050 and the springs 15B-055 from the flap hinge half 15B-040 and from the washbasin hinge half 15B-045.

(i) Remove the screws 15B-180, the washers 15B-190 and the washbasin unit bracket 15B-150 from the lavatory structure.

TASK 25-41-51-000-812-D01

D2549010509000 D2549010509400 D2549010509600 D2549010510200 D2549010510400
D2549010510800 D2549010511000 D2549010511400 D2549010511600 D2549010511800
D2549010512200 D2549010512400 D2549010513200 D2549010513400 D2549010513600
D2549010513800 D2549010603600 D2549010605600 D2549010605800 D2549010606200
D2549010606800 D2549010607000 D2549010608200 D2549010608400 D2549010608600
D2549010610200 D2549010612200 D2549010613200 D2549020502200 D2549020505600
D2549020507800 D2549020509000 D2549020509200 D2549020511000 D2549020512200
D2549020513000 D2549020513400 D2549020514200 D2549020514600 D2549020604200
D2549020604400 D2549020604800 D2549020605200 D2549020605400 D2549020605800
D2549020606000 D2549020606800 D2549020607000 D2549020607400 D2549020607600
D2549020607800 D2549020608600 D2549020608800 D2549020609000 D2549020609200
D2549020609400 D2549020609600 D2549020609800 D2549020610000 D2549020610200
D2549020610600 D2549020610800 D2549020611000 D2549020611200 D2549020611400
D2549020611600 D2549020611800 D2549020701200 D2549020703200 D2549020705800
D2549020706200 D2549020706400 D2549020708400 D2549020710000 D2549020710800
D2549020712400 D2549020712800 D2549020713000 D2549020714000 D2549020800200
D2549020800800 D2549020801200 D2549020801400 D2549020802200 D2549020802400
D2549020804000 D2549020804200 D2549020805000 D2549020806400 D2549020807000
D2549020807600 D2549020808600 D2549020809800 D2549020810200 D2549020814000
D2549030400200 D2549030400400 D2549030401400 D2549030401600 D2549030402600
D2549030402800 D2549030403000 D2549030404800 D2549030504000 D2549030504800
D2549030505200 D2549030505600 D2549030506000 D2549030506200 D2549030506400
D2549030600200 D2549030603200 D2549030604200 D2549030604600 D2549030606000
D2549030606400 D2549030606600 D2549030606800 D2549030607200 D2549030608000
D2549030608400 D2549030609000 D2549030609800 D2549030610000 D2549030611800
D2549030612000 D2549030612200 D2549030613400 D2549030614200 D2549030614400
D2549040500200 R225401107-004 R225401137-000 R225401137-002 R225401137-010
R225401137-012 R225401137-016 R225401159-000 R225401160-002 R225401175-000
R225401176-000 R225401196-008 R225401196-044 R225401196-054 R225401199-000
R225401199-002 R225401199-004 R225401199-006 R225401199-008 R225401609-000
R225401611-008 R225401611-010 R225401614-000 R225401618-000 R225401618-002
R225401619-002 R225401622-000 R225401625-000 R225401648-000

129. Removal and Disassembly of the Washbasin Unit

A. General

A complete disassembly of the component is not necessary and not recommended.

Do not disassemble the component more than it is necessary for:

- Cleaning
- Visual Inspection
- Replacement of defective parts.

B. Job Set-up Information

(1) Not applicable

C. Procedure

WARNING: **BE CAREFUL WHEN YOU USE SOLVENTS/CLEANING AGENTS, SEALANTS AND OTHER MATERIALS. OBEY THE MATERIAL MANUFACTURER'S INSTRUCTIONS AND THE LOCAL REGULATIONS. MAKE SURE THAT THERE IS A GOOD FLOW OF AIR THROUGH THE WORK AREA. DO NOT BREATHE THE FUMES. DO NOT SMOKE. DO NOT USE THESE MATERIALS NEAR A FLAME, SPARKS OR SOURCES OF HEAT. USE PROTECTIVE CLOTHING, GOGGLES AND GLOVES. IF YOU GET ONE OF THESE MATERIALS ON YOUR SKIN OR IN YOUR EYES, FLUSH IT AWAY WITH A FLOW OF CLEAN WATER. IF YOU GET ONE OF THESE MATERIALS IN YOUR MOUTH, GET IMMEDIATE MEDICAL AID. IN GENERAL, THESE MATERIALS ARE POISONOUS, FLAMMABLE AND SKIN IRRITANTS.**

CAUTION: **DO ALL THE WORK ON A CLEAN, SOFT SURFACE TO PREVENT DAMAGE TO THE COMPONENTS.**

SUB TASK 25-41-51-040-008-A01

D2549010509000 D2549010509400 D2549010509600 D2549010510200 D2549010510400 D2549010510800 D2549010511000 D2549010511400 D2549010511600 D2549010512200 D2549010512400 D2549010513200 D2549010513400 D2549010513600 D2549010513800 D2549020604200 D2549020604400 D2549020604800 D2549020605200 D2549020605400 D2549020606000 D2549020606800 D2549020607000 D2549020607400 D2549020607600 D2549020607800 D2549020608600 D2549020608800 D2549020609000 D2549020609400 D2549020609600 D2549020609800 D2549020610000 D2549020610200 D2549020610600 D2549020610800 D2549020611000 D2549020611200 D2549020611400 D2549020611600 D2549020611800 D2549020701200 D2549020703200 D2549030504000 D2549030504800 D2549030505200 D2549030505600 D2549030506200 D2549030506400 R225401107-004 R225401137-000 R225401137-002 R225401137-010 R225401137-012 R225401159-000 R225401175-000 R225401176-000

1. Removal and Disassembly of the Washbasin Unit (15C-1), (18-1)

NOTE: **See TABLE 3496 for the references for the replacement procedures of permanent installed parts.**

IPL FIG. ITEM	COMPONENT PART NAME	IPL FIG. ITEM	REPLACEMENT PART NAME	SEE REPAIR TASK
15C-001 15C-200	Washbasin Unit Angle	15C-210	Nut	Replacement of the Riveted Parts

Table 3496
Reference list for the replacement of permanent installed parts

(a) Remove the liquid soap dispenser assembly 15C-180 from the washbasin assembly 15C-010.

NOTE: **For further instructions, see CMMV 25-40-02_120C2 (liquid soap dispenser assembly).**

WARNING: **BE SURE THAT THE LOAD IS RELEASED BEFORE YOU REMOVE THE COMPONENT.**

(b) Remove the lock pins 15C-120, the bolts 15C-100, the washers 15C-110 and the damper 15C-090 from the waste flap assembly 15C-015 and from the waste chute 18-010.

(c) Discard the lock pins 15C-120.

(d) Remove the ground cable from the washbasin assembly 15C-010.

(e) Remove the screws 15C-250, the washers 15C-160 and the washbasin assembly 15C-010 from the washbasin unit bracket 15C-190.

(f) Remove the screws 15C-150, the washers 15C-160, the nuts 15C-230 and the washbasin assembly 15C-010 from the angles 15C-200.

(g) Remove the screws 15C-130, the washers 15C-140 and the washbasin assembly 15C-010 from the lavatory structure.

(h) Disassemble the washbasin assembly 15C-010 as follows:

1 Remove the screws 15C-065, the washers 15C-070, the clip nuts 15C-075 and the waste flap assembly 15C-015.

2 Disassemble the waste flap assembly 15C-015 as follows:

a Remove the screws 15C-025, the washers 15C-030 and the flap 15C-020 from the flap hinge half 15C-040.

b Disassemble the hinge assembly 15C-035 as follows:

WARNING: BE VERY CAREFUL WHEN YOU REMOVE OR INSTALL THE SPRING. BECAUSE THERE IS REMAINING TENSION IN THE SPRING, IT CAN CAUSE YOU INJURY.

Remove the retaining rings 15C-060, the axle 15C-050 and the springs 15C-055 from the flap hinge half 15C-040 and from the washbasin hinge half 15C-045.

(i) Remove the screws 15C-240, the washers 15C-140 and the angles 15C-200 from the lavatory structure.

(j) Remove the screws 15C-220, the washers 15C-160 and the washbasin unit bracket 15C-190 from the lavatory structure.

SUB TASK 25-41-51-040-008-B01

D2549010603600 D2549010605600 D2549010605800 D2549010606200 D2549010606800 D2549010607000 D2549010608200 D2549010608400 D2549010608600 D2549010610200 D2549010612200 D2549010613200 D2549020502200 D2549020505600 D2549020507800 D2549020509000 D2549020509200 D2549020511000 D2549020512200 D2549020513000 D2549020513400 D2549020514200 D2549020514600 D2549020605800 D2549020609200 D2549020705800 D2549020706200 D2549020706400 D2549020708400 D2549020710000 D2549020710800 D2549020712400 D2549020712800 D2549020713000 D2549020714000 D2549020800200 D2549020800800 D2549020801200 D2549020801400 D2549020802200 D2549020802400 D2549020804000 D2549020804200 D2549020805000 D2549020806400 D2549020807000 D2549020807600 D2549020808600 D2549020809800 D2549020810200 D2549020814000 D2549030400200 D2549030400400 D2549030401400 D2549030401600 D2549030402600 D2549030402800 D2549030403000 D2549030404800 D2549030506000 D2549030600200 D2549030603200 D2549030604200 D2549030604600 D2549030606000 D2549030606400 D2549030606600 D2549030606800 D2549030607200 D2549030608000 D2549030608400 D2549030609000 D2549030609800 D2549030610000 D2549030611800 D2549030612000 D2549030612200 D2549030613400 D2549030614200 D2549030614400 D2549040500200 R225401137-016 R225401160-002 R225401196-008 R225401196-044 R225401196-054 R225401199-000 R225401199-002 R225401199-004 R225401199-006 R225401199-008 R225401609-000 R225401611-008 R225401611-010

R225401614-000 R225401618-000 R225401618-002 R225401619-002 R225401622-000 R225401625-000 R225401648-000

2. Removal and Disassembly of the Washbasin Unit (15C-1), (18-1)

NOTE: **See TABLE 3497 for the references for the replacement procedures of permanent installed parts.**

IPL FIG. ITEM	COMPONENT PART NAME	IPL FIG. ITEM	REPLACEMENT PART NAME	SEE REPAIR TASK
15C-001 15C-200	Washbasin Unit Angle	15C-210	Nut	Replacement of the Riveted Parts

Table 3497
Reference list for the replacement of permanent installed parts

(a) Remove the washer 15C-184, the bracket 15C-182 and the liquid soap dispenser 15C-180 from the washbasin assembly 15C-010.

NOTE: **For further instructions, see CMMV 25-40-01_120C2 (liquid soap dispenser).**

WARNING: **BE SURE THAT THE LOAD IS RELEASED BEFORE YOU REMOVE THE COMPONENT.**

(b) Remove the lock pins 15C-120, the bolts 15C-100, the washers 15C-110 and the damper 15C-090 from the waste flap assembly 15C-015 and from the waste chute 18-010.

(c) Discard the lock pins 15C-120.

(d) Remove the ground cable from the washbasin assembly 15C-010.

(e) Remove the screws 15C-250, the washers 15C-160 and the washbasin assembly 15C-010 from the washbasin unit bracket 15C-190.

(f) Remove the screws 15C-150, the washers 15C-160, the nuts 15C-230 and the washbasin assembly 15C-010 from the angles 15C-200.

(g) Remove the screws 15C-130, the washers 15C-140 and the washbasin assembly 15C-010 from the lavatory structure.

(h) Disassemble the washbasin assembly 15C-010 as follows:

1 Remove the screws 15C-065, the washers 15C-070, the clip nuts 15C-075 and the waste flap assembly 15C-015.

2 Disassemble the waste flap assembly 15C-015 as follows:
a Remove the screws 15C-025, the washers 15C-030 and the flap 15C-020 from the flap hinge half 15C-040.
b Disassemble the hinge assembly 15C-035 as follows:

WARNING: BE VERY CAREFUL WHEN YOU REMOVE OR INSTALL THE SPRING. BECAUSE THERE IS REMAINING TENSION IN THE SPRING, IT CAN CAUSE YOU INJURY.

Remove the retaining rings 15C-060, the axle 15C-050 and the springs 15C-055 from the flap hinge half 15C-040 and from the washbasin hinge half 15C-045.

(i) Remove the screws 15C-240, the washers 15C-140 and the angles 15C-200 from the lavatory structure.

(j) Remove the screws 15C-220, the washers 15C-160, 15C-165 and the washbasin unit bracket 15C-190 from the lavatory structure.

SUB TASK 25-41-51-040-008-C01
D2549010511800

3. Removal and Disassembly of the Washbasin Unit (15C-1), (18-1)

NOTE: See TABLE 3498 for the references for the replacement procedures of permanent installed parts.

IPL FIG. ITEM	COMPONENT PART NAME	IPL FIG. ITEM	REPLACEMENT PART NAME	SEE REPAIR TASK
15C-001 15C-200	Washbasin Unit Angle	15C-210	Nut	Replacement of the Riveted Parts

Table 3498
Reference list for the replacement of permanent installed parts

(a) Remove the liquid soap dispenser assembly 15C-180 from the washbasin assembly 15C-010.

WARNING: **BE SURE THAT THE LOAD IS RELEASED BEFORE YOU REMOVE THE COMPONENT.**

(b) Remove the lock pins 15C-120, the bolts 15C-100, the washers 15C-110 and the damper 15C-090 from the waste flap assembly 15C-015 and from the waste chute 18-010.

(c) Discard the lock pins 15C-120.

(d) Remove the ground cable from the washbasin assembly 15C-010.

(e) Remove the screws 15C-250, the washers 15C-160 and the washbasin assembly 15C-010 from the washbasin unit bracket 15C-190.

(f) Remove the screws 15C-150, the washers 15C-160, the nuts 15C-230 and the washbasin assembly 15C-010 from the angles 15C-200.

(g) Remove the screws 15C-130, the washers 15C-140 and the washbasin assembly 15C-010 from the lavatory structure.

(h) Disassemble the washbasin assembly 15C-010 as follows:

1 Remove the screws 15C-065, the washers 15C-070, the clip nuts 15C-075 and the waste flap assembly 15C-015.

2 Disassemble the waste flap assembly 15C-015 as follows:

a Remove the screws 15C-025, the washers 15C-030 and the flap 15C-020 from the flap hinge half 15C-040.

b Disassemble the hinge assembly 15C-035 as follows:

WARNING: **BE VERY CAREFUL WHEN YOU REMOVE OR INSTALL THE SPRING. BECAUSE THERE IS REMAINING TENSION IN THE SPRING, IT CAN CAUSE YOU INJURY.**

Remove the retaining rings 15C-060, the axle 15C-050 and the springs 15C-055 from the flap hinge half 15C-040 and from the washbasin hinge half 15C-045.

(i) Remove the screws 15C-240, the washers 15C-140 and the angles 15C-200 from the lavatory structure.

(j) Remove the screws 15C-220, the washers 15C-160 and the washbasin unit bracket 15C-190 from the lavatory structure.

TASK 25-41-51-000-812-E01

D2549010400200 D2549010400600 D2549010401000 D2549010509800 D2549010510000
D2549010512000 D2549010600000 D2549010600400 D2549010602400 D2549010612600
D2549010613400 D2549010613600 D2549020400600 D2549020401000 D2549020404400
D2549020405200 D2549020406400 D2549020409800 D2549020410600 D2549020508000
D2549020512600 D2549020604600 D2549020605000 D2549020608400 D2549020614000
D2549020701400 D2549020706600 D2549020709000 D2549020811600 D2549020812000
D2549020812400 D2549020814600 D2549030408200 D2549030412200 D2549030413400
D2549030504600 R225401136-016 R225401649-000

130. Removal and Disassembly of the Washbasin Unit

A. General

A complete disassembly of the component is not necessary and not recommended.

Do not disassemble the component more than it is necessary for:

- Cleaning
- Visual Inspection
- Replacement of defective parts.

B. Job Set-up Information

(1) Not applicable

C. Procedure

WARNING: **BE CAREFUL WHEN YOU USE SOLVENTS/CLEANING AGENTS, SEALANTS AND OTHER MATERIALS. OBEY THE MATERIAL MANUFACTURER'S INSTRUCTIONS AND THE LOCAL REGULATIONS. MAKE SURE THAT THERE IS A GOOD FLOW OF AIR THROUGH THE WORK AREA. DO NOT BREATHE THE FUMES. DO NOT SMOKE. DO NOT USE THESE MATERIALS NEAR A FLAME, SPARKS OR SOURCES OF HEAT. USE PROTECTIVE CLOTHING, GOGGLES AND GLOVES. IF YOU GET ONE OF THESE MATERIALS ON YOUR SKIN OR IN YOUR EYES, FLUSH IT AWAY WITH A FLOW OF CLEAN WATER. IF YOU GET ONE OF THESE MATERIALS IN YOUR MOUTH, GET IMMEDIATE MEDICAL AID. IN GENERAL, THESE MATERIALS ARE POISONOUS, FLAMMABLE AND SKIN IRRITANTS.**

CAUTION: **DO ALL THE WORK ON A CLEAN, SOFT SURFACE TO PREVENT DAMAGE TO THE COMPONENTS.**

SUB TASK 25-41-51-040-009-A01

D2549010509800 D2549010512000 D2549010600000 D2549010600400 D2549010602400 D2549020604600 D2549020605000 D2549020608400 D2549020614000 D2549020701400 R225401136-016

1. Removal and Disassembly of the Washbasin Unit (15D-1)

NOTE: **See TABLE 3499 for the references for the replacement procedures of permanent installed parts.**

IPL FIG. ITEM	COMPONENT PART NAME	IPL FIG. ITEM	REPLACEMENT PART NAME	SEE REPAIR TASK
15D-001 15D-220	Washbasin Unit Angle	15D-230	Nut	Replacement of the Riveted Parts
15D-001 15D-290	Washbasin Unit Bracket	15D-300	Insert	25-00-01
15D-001 15D-310	Washbasin Unit Bracket	15D-320	Insert	SPM 25-00-01

Table 3499
Reference list for the replacement of permanent installed parts

(a) Remove the liquid soap dispenser assembly 15D-200 from the washbasin assembly 15D-010.

NOTE: **For further instructions, see CMMV 25-40-02_120C2 (liquid soap dispenser assembly).**

(b) Remove the ground cable from the washbasin assembly 15D-010.

(c) Remove the screw 15D-260, the washer 15D-270, the nut 15D-280 and the washbasin assembly 15D-010 from the washbasin bracket 15D-210.

(d) Remove the screws 15D-160, the washers 15D-190, the brackets 15D-290, 15D-310 and the washbasin assembly 15D-010 from the angles 15D-220.

(e) Remove the screws 15D-160, the washers 15D-170, the rear cover 15D-020 and the washbasin assembly 15D-010 from the lavatory structure.

(f) Disassemble the washbasin assembly 15D-010 as follows:

1 Remove the screws 15D-090, the washers 15D-100, the nuts 15D-110 and the flap assembly 15D-040 from the washbasin 15D-030.

2 Disassemble the flap assembly 15D-040 as follows:
a

WARNING: BE VERY CAREFUL WHEN YOU REMOVE OR INSTALL THE SPRING. BECAUSE THERE IS REMAINING TENSION IN THE SPRING, IT CAN CAUSE YOU INJURY.

Remove the splints 15D-070, the pins 15D-060, the springs 15D-080 and the flap 15D-050.

(g) Remove the screw 15D-160, the washer 15D-270 and the bracket 15D-290 from the lavatory structure.

(h) Remove the screws 15D-180, the washers 15D-170 and the angles 15D-220 from the lavatory structure.

(i) Remove the screws 15D-180, the washers 15D-190 and the washbasin bracket 15D-210 from the lavatory structure.

SUB TASK 25-41-51-040-009-B01
D2549010400200 D2549010400600 D2549010401000 D2549010510000 D2549010612600 D2549010613400 D2549010613600 D2549020400600 D2549020401000 D2549020404400 D2549020405200 D2549020406400 D2549020409800 D2549020410600 D2549020508000 D2549020512600 D2549020706600 D2549020709000 D2549020811600 D2549020812000 D2549020812400 D2549020814600 D2549030408200 D2549030412200 D2549030413400 D2549030504600 R225401649-000

2. Removal and Disassembly of the Washbasin Unit (15D-1)

NOTE: **See TABLE 3500 for the references for the replacement procedures of permanent installed parts.**

IPL FIG. ITEM	COMPONENT PART NAME	IPL FIG. ITEM	REPLACEMENT PART NAME	SEE REPAIR TASK/ SPM REFERENCE
15D-001 15D-220	Washbasin Unit Angle	15D-230	Nut	Replacement of the Riveted Parts
15D-001 15D-290	Washbasin Unit Bracket	15D-300	Insert	SPM 25-00-01
15D-001 15D-310	Washbasin Unit Bracket	15D-320	Insert	SPM 25-00-01

Table 3500
Reference list for the replacement of permanent installed parts

(a) Remove the liquid soap dispenser 15D-200 from the washbasin assembly 15D-010.

NOTE: **For further instructions, see CMMV 25-40-01_120C2 (liquid soap dispenser).**

(b) Remove the ground cable from the washbasin assembly 15D-010.

(c) Remove the screw 15D-260, the washer 15D-270, the nut 15D-280 and the washbasin assembly 15D-010 from the washbasin bracket 15D-210.

(d) Remove the screws 15D-160, the washers 15D-190, the brackets 15D-290, 15D-310 and the washbasin assembly 15D-010 from the angles 15D-220.

(e) Remove the screws 15D-160, the washers 15D-170, the rear cover 15D-020 and the washbasin assembly 15D-010 from the lavatory structure.

(f) Disassemble the washbasin assembly 15D-010 as follows:

1 Remove the screws 15D-090, the washers 15D-100, the nuts 15D-110 and the flap assembly 15D-040 from the washbasin 15D-030.

2 Disassemble the flap assembly 15D-040 as follows:

a

WARNING: **BE VERY CAREFUL WHEN YOU REMOVE OR INSTALL THE SPRING. BECAUSE THERE IS REMAINING TENSION IN THE SPRING, IT CAN CAUSE YOU INJURY.**

Remove the splints 15D-070, the pins 15D-060, the springs 15D-080 and the flap 15D-050.

(g) Remove the screw 15D-160, the washer 15D-270 and the bracket 15D-290 from the lavatory structure.

(h) Remove the screws 15D-180, the washers 15D-170 and the angles 15D-220 from the lavatory structure.

(i) Remove the screws 15D-180, the washers 15D-190 and the washbasin bracket 15D-210 from the lavatory structure.

TASK 25-41-51-000-812-F01
D2549010513000 D2549030507000 D2549030507200 R225401172-002

131. Removal and Disassembly of the Washbasin Unit

A. General

A complete disassembly of the component is not necessary and not recommended.

Do not disassemble the component more than it is necessary for:

- Cleaning
- Visual Inspection
- Replacement of defective parts.

B. Job Set-up Information

(1) Not applicable

C. Procedure

WARNING: BE CAREFUL WHEN YOU USE SOLVENTS/CLEANING AGENTS, SEALANTS AND OTHER MATERIALS. OBEY THE MATERIAL MANUFACTURER'S INSTRUCTIONS AND THE LOCAL REGULATIONS. MAKE SURE THAT THERE IS A GOOD FLOW OF AIR THROUGH THE WORK AREA. DO NOT BREATHE THE FUMES. DO NOT SMOKE. DO NOT USE THESE MATERIALS NEAR A FLAME, SPARKS OR SOURCES OF HEAT. USE PROTECTIVE CLOTHING, GOGGLES AND GLOVES. IF YOU GET ONE OF THESE MATERIALS ON YOUR SKIN OR IN YOUR EYES, FLUSH IT AWAY WITH A FLOW OF CLEAN WATER. IF YOU GET ONE OF THESE MATERIALS IN YOUR MOUTH, GET IMMEDIATE MEDICAL AID. IN GENERAL, THESE MATERIALS ARE POISONOUS, FLAMMABLE AND SKIN IRRITANTS.

CAUTION: DO ALL THE WORK ON A CLEAN, SOFT SURFACE TO PREVENT DAMAGE TO THE COMPONENTS.

SUB TASK 25-41-51-040-010-A01

1. Removal and Disassembly of the Washbasin Unit (15E-1), (18-1)

NOTE: **See TABLE 3501 for the references for the replacement procedures of permanent installed parts.**

IPL FIG. ITEM	COMPONENT PART NAME	IPL FIG. ITEM	REPLACEMENT PART NAME	SEE REPAIR TASK
15E-001 15E-190	Washbasin Unit Angle	15E-200	Nut	Replacement of the Riveted Parts

Table 3501
Reference list for the replacement of permanent installed parts

(a) Remove the liquid soap dispenser assembly 15E-160 from the washbasin assembly 15E-010.

NOTE: **For further instructions, see CMMV 25-40-02_120C2 (liquid soap dispenser assembly).**

WARNING: **BE SURE THAT THE LOAD IS RELEASED BEFORE YOU REMOVE THE COMPONENT.**

(b) Remove the lock pins 15E-110, the bolts 15E-090, the washers 15E-100 and the damper 15E-080 from the waste flap assembly 15E-015 and from the waste chute 18-010.

(c) Discard the lock pins 15E-110.

(d) Remove the ground cable from the washbasin assembly 15E-010.

(e) Remove the screws 15E-240, the washers 15E-150 and the washbasin assembly 15E-010 from the washbasin unit bracket 15E-170.

(f) Remove the screws 15E-140, the washers 15E-150, the nuts 15E-220 and the washbasin assembly 15E-010 from the angles 15E-190.

(g) Remove the screws 15E-120, the washers 15E-130 and the washbasin assembly 15E-010 from the lavatory structure.

(h) Disassemble the washbasin assembly 15E-010 as follows:

1 Remove the screws 15E-065, the washers 15E-070, the clip nuts 15E-075 and the waste flap assembly 15E-015.

2 Disassemble the waste flap assembly 15E-015 as follows:

a Remove the screws 15E-025, the washers 15E-030 and the flap 15E-020 from the flap hinge half 15E-040.

b Disassemble the hinge assembly 15E-035 as follows:

WARNING: BE VERY CAREFUL WHEN YOU REMOVE OR INSTALL THE SPRING. BECAUSE THERE IS REMAINING TENSION IN THE SPRING, IT CAN CAUSE YOU INJURY.

Remove the retaining rings 15E-060, the axle 15E-050 and the springs 15E-055 from the flap hinge half 15E-040 and from the washbasin hinge half 15E-045.

(i) Remove the screws 15E-230, the washers 15E-130 and the angles 15E-190 from the lavatory structure.

(j) Remove the screws 15E-210, the washers 15E-150 and the washbasin unit bracket 15E-170 from the lavatory structure.

TASK 25-41-51-000-812-G01

D2549010404000 D2549010404800 D2549010510600 D2549010512600 D2549010514000
D2549010514200 D2549010514400 D2549010514800 D2549010600200 D2549010600600
D2549010601000 D2549010601200 D2549010601400 D2549010601800 D2549010602600
D2549010603200 D2549010606400 D2549010607800 D2549010609400 D2549010610600
D2549010614400 D2549020402200 D2549020407200 D2549020506200 D2549020506400
D2549020506600 D2549020506800 D2549020507000 D2549020507200 D2549020508200
D2549020510400 D2549020512800 D2549020514000 D2549020602200 D2549020605600
D2549020608200 D2549020610400 D2549020612200 D2549020612400 D2549020612600
D2549020612800 D2549020613000 D2549020613200 D2549020613600 D2549020613800
D2549020614400 D2549020614600 D2549020700000 D2549020700400 D2549020700800
D2549020701000 D2549020701800 D2549020702000 D2549020703600 D2549020703800
D2549020704000 D2549020709600 D2549020711000 D2549020713800 D2549020801000
D2549020801600 D2549020805400 D2549020811200 D2549030401000 D2549030402000
D2549030402400 D2549030403400 D2549030403600 D2549030404000 D2549030404400
D2549030404600 D2549030405200 D2549030412000 D2549030504200 D2549030505400
D2549030505800 D2549030506600 D2549030506800 D2549030507400 D2549030507600
D2549030507800 D2549030508000 D2549030508600 D2549030508800 D2549030509000
D2549030509200 D2549030509400 D2549030509600 D2549030510200 D2549030510600
D2549030511000 D2549030511400 D2549030511600 D2549030511800 D2549030512000
D2549030512200 D2549030512400 D2549030513000 D2549030513200 D2549030513600
D2549030513800 D2549030514000 D2549030514200 D2549030514400 D2549030514800
D2549030601200 D2549030601800 D2549030602800 D2549030603400 D2549030603800
D2549030604800 D2549030605200 D2549030605400 D2549030607000 D2549030607400
D2549030607600 D2549030608800 D2549030610600 D2549030611200 D2549030611400
D2549030612800 D2549030613200 D2549030613600 R225401134-002 R225401134-004
R225401134-006 R225401134-008 R225401134-010 R225401134-012 R225401134-016
R225401134-018 R225401134-020 R225401134-022 R225401134-024 R225401134-026
R225401134-028 R225401134-030 R225401134-032 R225401134-034 R225401134-036
R225401137-004 R225401137-006 R225401137-008 R225401153-000 R225401168-004
R225401168-006 R225401175-002 R225401183-000 R225401183-002 R225401183-004
R225401183-006 R225401183-008

132. Removal and Disassembly of the Washbasin Unit

A. General

A complete disassembly of the component is not necessary and not recommended.

Do not disassemble the component more than it is necessary for:

- Cleaning
- Visual Inspection
- Replacement of defective parts.

B. Job Set-up Information

(1) Not applicable

C. Procedure

WARNING: **BE CAREFUL WHEN YOU USE SOLVENTS/CLEANING AGENTS, SEALANTS AND OTHER MATERIALS. OBEY THE MATERIAL MANUFACTURER'S INSTRUCTIONS AND THE LOCAL REGULATIONS. MAKE SURE THAT THERE IS A GOOD FLOW OF AIR THROUGH THE WORK AREA. DO NOT BREATHE THE FUMES. DO NOT SMOKE. DO NOT USE THESE MATERIALS NEAR A FLAME, SPARKS OR SOURCES OF HEAT. USE PROTECTIVE CLOTHING, GOGGLES AND GLOVES. IF YOU GET ONE OF THESE MATERIALS ON YOUR SKIN OR IN YOUR EYES, FLUSH IT AWAY WITH A FLOW OF CLEAN WATER. IF YOU GET ONE OF THESE MATERIALS IN YOUR MOUTH, GET IMMEDIATE MEDICAL AID. IN GENERAL, THESE MATERIALS ARE POISONOUS, FLAMMABLE AND SKIN IRRITANTS.**

CAUTION: **DO ALL THE WORK ON A CLEAN, SOFT SURFACE TO PREVENT DAMAGE TO THE COMPONENTS.**

SUB TASK 25-41-51-040-011-A01

D2549020508200 D2549020512800 D2549020605600 D2549020608200 D2549020613600 D2549020801000 D2549030402000 D2549030403400 D2549030404600 D2549030405200 D2549030507800 D2549030513000 D2549030602800 D2549030604800 D2549030607000 D2549030610600 D2549030612800 R225401134-002 R225401134-004 R225401134-006 R225401134-008 R225401134-010 R225401134-012 R225401134-016 R225401134-018 R225401134-020 R225401134-022 R225401134-024 R225401134-026 R225401134-028 R225401134-030 R225401134-032 R225401134-034 R225401134-036

1. Removal and Disassembly of the Washbasin Unit (15F-1), (18-1)

NOTE: **See TABLE 3502 for the references for the replacement procedures of permanent installed parts.**

IPL FIG. ITEM	COMPONENT PART NAME	IPL FIG. ITEM	REPLACEMENT PART NAME	SEE REPAIR TASK
15F-001 15F-270	Washbasin Unit Angle	15F-280	Nut	Replacement of the Riveted Parts

Table 3502
Reference list for the replacement of permanent installed parts

WARNING: **BE SURE THAT THE LOAD IS RELEASED BEFORE YOU REMOVE THE COMPONENT.**

(a) Remove the lock pins 15F-180, the bolts 15F-160, the washers 15F-170 and the damper 15F-150 from the waste flap assembly 15F-020 and from the waste chute 18-010.

(b) Discard the lock pins 15F-180.

(c) Remove the ground cable from the washbasin assembly 15F-010.

(d) Remove the screws 15F-310, the washers 15F-220 and the washbasin assembly 15F-010 from the washbasin unit bracket 15F-240.

(e) Remove the screws 15F-210, the washers 15F-220, the nuts 15F-300 and the washbasin assembly 15F-010 from the angles 15F-270.

(f) Remove the screws 15F-190, the washers 15F-200 and the washbasin assembly 15F-010 from the lavatory structure.

(g) Disassemble the washbasin assembly 15F-010 as follows:

1 Remove the screws 15F-120, the washers 15F-130, the clip nuts 15F-140 and the waste flap assembly 15F-020.

2 Disassemble the waste flap assembly 15F-020 as follows:
- a Remove the screws 15F-040, the washers 15F-050 and the flap 15F-030 from the flap hinge half 15F-070.
- b Disassemble the hinge assembly 15F-060 as follows:

WARNING: **BE VERY CAREFUL WHEN YOU REMOVE OR INSTALL THE SPRING. BECAUSE THERE IS REMAINING TENSION IN THE SPRING, IT CAN CAUSE YOU INJURY.**

Remove the retaining rings 15F-110, the axle 15F-090 and the springs 15F-100 from the flap hinge half 15F-070 and from the washbasin hinge half 15F-080.

(h) Remove the screws 15F-290, the washers 15F-200 and the angles 15F-270 from the lavatory structure.

(i) Remove the screws 15F-260, the washers 15F-220 and the washbasin unit bracket 15F-240 from the lavatory structure.

SUB TASK 25-41-51-040-011-B01
D2549010510600 D2549010512600 D2549010514000 D2549010514200 D2549010514400 D2549010514800 D2549010600200 D2549010600600 D2549010601000 D2549010601200 D2549010601400 D2549010601800 D2549010602600 D2549020506600 D2549020506800 D2549020602200 D2549020612200 D2549020612400 D2549020612600 D2549020612800 D2549020613000 D2549020613200 D2549020613800 D2549020614600 D2549020700000 D2549020700400 D2549020701800 D2549020702000 D2549020703600 D2549020703800 D2549030504200 D2549030507400 D2549030507600 D2549030508000 D2549030508600 D2549030508800 D2549030509000 D2549030509200 D2549030510200 D2549030510600 D2549030511000 D2549030511400 D2549030511600 D2549030511800 D2549030512000 D2549030512200 D2549030512400 D2549030513200 D2549030513600 D2549030514200 R225401137-004 R225401137-006 R225401137-008 R225401153-000 R225401168-004 R225401168-006 R225401175-002

2. Removal and Disassembly of the Washbasin Unit (15F-1), (18-1)

NOTE: **See TABLE 3503 for the references for the replacement procedures of permanent installed parts.**

IPL FIG. ITEM	COMPONENT PART NAME	IPL FIG. ITEM	REPLACEMENT PART NAME	SEE REPAIR TASK
15F-001 15F-270	Washbasin Unit Angle	15F-280	Nut	Replacement of the Riveted Parts

Table 3503
Reference list for the replacement of permanent installed parts

(a) Remove the liquid soap dispenser assembly 15F-230 from the washbasin assembly 15F-010.

NOTE: For further instructions, see CMMV 25-40-02_120C2 (liquid soap dispenser assembly).

WARNING: BE SURE THAT THE LOAD IS RELEASED BEFORE YOU REMOVE THE COMPONENT.

(b) Remove the lock pins 15F-180, the bolts 15F-160, the washers 15F-170 and the damper 15F-150 from the waste flap assembly 15F-020 and from the waste chute 18-010.

(c) Discard the lock pins 15F-180.

(d) Remove the ground cable from the washbasin assembly 15F-010.

(e) Remove the screws 15F-310, the washers 15F-220 and the washbasin assembly 15F-010 from the washbasin unit bracket 15F-240.

(f) Remove the screws 15F-210, the washers 15F-220, the nuts 15F-300 and the washbasin assembly 15F-010 from the angles 15F-270.

(g) Remove the screws 15F-190, the washers 15F-200 and the washbasin assembly 15F-010 from the lavatory structure.

(h) Disassemble the washbasin assembly 15F-010 as follows:

1 Remove the screws 15F-120, the washers 15F-130, the clip nuts 15F-140 and the waste flap assembly 15F-020.

2 Disassemble the waste flap assembly 15F-020 as follows:

a Remove the screws 15F-040, the washers 15F-050 and the flap 15F-030 from the flap hinge half 15F-070.

b Disassemble the hinge assembly 15F-060 as follows:

WARNING: BE VERY CAREFUL WHEN YOU REMOVE OR INSTALL THE SPRING. BECAUSE THERE IS REMAINING TENSION IN THE SPRING, IT CAN CAUSE YOU INJURY.

Remove the retaining rings 15F-110, the axle 15F-090 and the springs 15F-100 from the flap hinge half 15F-070 and from the washbasin hinge half 15F-080.

(i) Remove the screws 15F-290, the washers 15F-200 and the angles 15F-270 from the lavatory structure.

(j) Remove the screws 15F-260, the washers 15F-220 and the washbasin unit bracket 15F-240 from the lavatory structure.

SUB TASK 25-41-51-040-011-C01
D2549030402400 D2549030403600 D2549030404400 D2549030513800 D2549030601800 D2549030603800 D2549030607400 D2549030608800 D2549030611200 D2549030613200

3. Removal and Disassembly of the Washbasin Unit (15F-1), (18-1)

NOTE: **See TABLE 3504 for the references for the replacement procedures of permanent installed parts.**

IPL FIG. ITEM	COMPONENT PART NAME	IPL FIG. ITEM	REPLACEMENT PART NAME	SEE REPAIR TASK
15F-001 15F-270	Washbasin Unit Angle	15F-280	Nut	Replacement of the Riveted Parts

Table 3504
Reference list for the replacement of permanent installed parts

(a) Remove the liquid soap dispenser support 15F-235 from the washbasin assembly 15F-010.

WARNING: **BE SURE THAT THE LOAD IS RELEASED BEFORE YOU REMOVE THE COMPONENT.**

(b) Remove the lock pins 15F-180, the bolts 15F-160, the washers 15F-170 and the damper 15F-150 from the waste flap assembly 15F-020 and from the waste chute 18-010.

(c) Discard the lock pins 15F-180.

(d) Remove the ground cable from the washbasin assembly 15F-010.

(e) Remove the screws 15F-310, the washers 15F-220 and the washbasin assembly 15F-010 from the washbasin unit bracket 15F-240.

(f) Remove the screws 15F-210, the washers 15F-220, the nuts 15F-300 and the washbasin assembly 15F-010 from the angles 15F-270.

(g) Remove the screws 15F-190, the washers 15F-200 and the washbasin assembly 15F-010 from the lavatory structure.

(h) Disassemble the washbasin assembly 15F-010 as follows:

1 Remove the screws 15F-120, the washers 15F-130, the clip nuts 15F-140 and the waste flap assembly 15F-020.

2 Disassemble the waste flap assembly 15F-020 as follows:
a Remove the screws 15F-040, the washers 15F-050 and the flap 15F-030 from the flap hinge half 15F-070.
b Disassemble the hinge assembly 15F-060 as follows:

WARNING: BE VERY CAREFUL WHEN YOU REMOVE OR INSTALL THE SPRING. BECAUSE THERE IS REMAINING TENSION IN THE SPRING, IT CAN CAUSE YOU INJURY.

Remove the retaining rings 15F-110, the axle 15F-090 and the springs 15F-100 from the flap hinge half 15F-070 and from the washbasin hinge half 15F-080.

(i) Remove the screws 15F-290, the washers 15F-200 and the angles 15F-270 from the lavatory structure.

(j) Remove the screws 15F-260, the washers 15F-220 and the washbasin unit bracket 15F-240 from the lavatory structure.

SUB TASK 25-41-51-040-011-D01

D2549020506200 D2549020506400 D2549020507000 D2549020507200 D2549020514000 D2549020610400 D2549020614400 D2549020700800 D2549020701000 D2549020704000 D2549020709600 D2549020711000 D2549020801600 D2549020811200 D2549030401000 D2549030505400 D2549030505800 D2549030506600 D2549030506800 D2549030509400 D2549030509600 D2549030514000 D2549030514400 D2549030601200 D2549030603400 D2549030605200 D2549030605400 D2549030607600 D2549030611400

4. Removal and Disassembly of the Washbasin Unit (15F-1), (18-1)

NOTE: **See TABLE 3505 for the references for the replacement procedures of permanent installed parts.**

IPL FIG. ITEM	COMPONENT PART NAME	IPL FIG. ITEM	REPLACEMENT PART NAME	SEE REPAIR TASK
15F-001 15F-270	Washbasin Unit Angle	15F-280	Nut	Replacement of the Riveted Parts

Table 3505
Reference list for the replacement of permanent installed parts

(a) Remove the liquid soap dispenser bottle 15F-230 and the liquid soap dispenser support 15F-235 from the washbasin assembly 15F-010.

(b) Remove the liquid soap dispenser bottle 15F-230 from the liquid soap dispenser support 15F-235.

WARNING: **BE SURE THAT THE LOAD IS RELEASED BEFORE YOU REMOVE THE COMPONENT.**

(c) Remove the lock pins 15F-180, the bolts 15F-160, the washers 15F-170 and the damper 15F-150 from the waste flap assembly 15F-020 and from the waste chute 18-010.

(d) Discard the lock pins 15F-180.

(e) Remove the ground cable from the washbasin assembly 15F-010.

(f) Remove the screws 15F-310, the washers 15F-220 and the washbasin assembly 15F-010 from the washbasin unit bracket 15F-240.

(g) Remove the screws 15F-210, the washers 15F-220, the nuts 15F-300 and the washbasin assembly 15F-010 from the angles 15F-270.

(h) Remove the screws 15F-190, the washers 15F-200 and the washbasin assembly 15F-010 from the lavatory structure.

(i) Disassemble the washbasin assembly 15F-010 as follows:

1 Remove the screws 15F-120, the washers 15F-130, the clip nuts 15F-140 and the waste flap assembly 15F-020.

2 Disassemble the waste flap assembly 15F-020 as follows:

a Remove the screws 15F-040, the washers 15F-050 and the flap 15F-030 from the flap hinge half 15F-070.

b Disassemble the hinge assembly 15F-060 as follows:

WARNING: BE VERY CAREFUL WHEN YOU REMOVE OR INSTALL THE SPRING. BECAUSE THERE IS REMAINING TENSION IN THE SPRING, IT CAN CAUSE YOU INJURY.

Remove the retaining rings 15F-110, the axle 15F-090 and the springs 15F-100 from the flap hinge half 15F-070 and from the washbasin hinge half 15F-080.

(j) Remove the screws 15F-290, the washers 15F-200 and the angles 15F-270 from the lavatory structure.

(k) Remove the screws 15F-260, the washers 15F-220 and the washbasin unit bracket 15F-240 from the lavatory structure.

SUB TASK 25-41-51-040-011-E01
D2549010404000 D2549010404800 D2549010603200 D2549010606400 D2549010607800 D2549010609400 D2549010610600 D2549010614400 D2549020402200 D2549020407200 D2549020510400 D2549020713800 D2549020805400 D2549030404000 D2549030412000 D2549030514800 D2549030613600 R225401183-000 R225401183-002 R225401183-004 R225401183-006 R225401183-008

5. Removal and Disassembly of the Washbasin Unit (15F-1), (18-1)

NOTE: See TABLE 3506 for the references for the replacement procedures of permanent installed parts.

IPL FIG. ITEM	COMPONENT PART NAME	IPL FIG. ITEM	REPLACEMENT PART NAME	SEE REPAIR TASK
15F-001 15F-270	Washbasin Unit Angle	15F-280	Nut	Replacement of the Riveted Parts

Table 3506
Reference list for the replacement of permanent installed parts

(a) Remove the liquid soap dispenser 15F-230 from the washbasin assembly 15F-010.

NOTE: For further instructions, see CMMV 25-40-01_120C2 (liquid soap dispenser).

WARNING: BE SURE THAT THE LOAD IS RELEASED BEFORE YOU REMOVE THE COMPONENT.

(b) Remove the lock pins 15F-180, the bolts 15F-160, the washers 15F-170 and the damper 15F-150 from the waste flap assembly 15F-020 and from the waste chute 18-010.

(c) Discard the lock pins 15F-180.

(d) Remove the ground cable from the washbasin assembly 15F-010.

(e) Remove the screws 15F-310, the washers 15F-220 and the washbasin assembly 15F-010 from the washbasin unit bracket 15F-240.

(f) Remove the screws 15F-210, the washers 15F-220, the nuts 15F-300 and the washbasin assembly 15F-010 from the angles 15F-270.

(g) Remove the screws 15F-190, the washers 15F-200 and the washbasin assembly 15F-010 from the lavatory structure.

(h) Disassemble the washbasin assembly 15F-010 as follows:

1 Remove the screws 15F-120, the washers 15F-130, the clip nuts 15F-140 and the waste flap assembly 15F-020.

2 Disassemble the waste flap assembly 15F-020 as follows:

a Remove the screws 15F-040, the washers 15F-050 and the flap 15F-030 from the flap hinge half 15F-070.

b Disassemble the hinge assembly 15F-060 as follows:

WARNING: BE VERY CAREFUL WHEN YOU REMOVE OR INSTALL THE SPRING. BECAUSE THERE IS REMAINING TENSION IN THE SPRING, IT CAN CAUSE YOU INJURY.

Remove the retaining rings 15F-110, the axle 15F-090 and the springs 15F-100 from the flap hinge half 15F-070 and from the washbasin hinge half 15F-080.

(i) Remove the screws 15F-290, the washers 15F-200 and the angles 15F-270 from the lavatory structure.

(j) Remove the screws 15F-260, the washers 15F-220 and the washbasin unit bracket 15F-240 from the lavatory structure.

TASK 25-41-51-000-812-H01

D2549010400000 D2549010400400 D2549010400800 D2549010402600 D2549010514600
D2549010600800 D2549010601600 D2549010602000 D2549010602200 D2549010602800
D2549010603000 D2549010603400 D2549010603800 D2549010604000 D2549010604200
D2549010604400 D2549010604600 D2549010605000 D2549010606600 D2549010607200
D2549010607400 D2549010608800 D2549010609000 D2549010609200 D2549010609600
D2549010609800 D2549010610400 D2549010610800 D2549010611000 D2549010611600
D2549010611800 D2549010612000 D2549010612400 D2549010613000 D2549010613800
D2549010614200 D2549010614600 D2549010614800 D2549020400000 D2549020400200
D2549020400400 D2549020404200 D2549020404600 D2549020405000 D2549020405400
D2549020405600 D2549020405800 D2549020507400 D2549020507600 D2549020508800
D2549020509600 D2549020509800 D2549020510000 D2549020510600 D2549020510800
D2549020511200 D2549020511600 D2549020511800 D2549020512000 D2549020512400
D2549020513600 D2549020514400 D2549020514800 D2549020612000 D2549020614800
D2549020700200 D2549020700600 D2549020701600 D2549020702200 D2549020702400
D2549020702600 D2549020702800 D2549020703400 D2549020704200 D2549020704400
D2549020704600 D2549020704800 D2549020705000 D2549020705200 D2549020705400
D2549020706000 D2549020706800 D2549020707200 D2549020707400 D2549020707600
D2549020707800 D2549020708000 D2549020708200 D2549020708600 D2549020708800
D2549020709400 D2549020709800 D2549020711200 D2549020711400 D2549020711600
D2549020712200 D2549020713200 D2549020713400 D2549020713600 D2549020714400
D2549020714600 D2549020800000 D2549020800600 D2549020802000 D2549020802800
D2549020803000 D2549020803200 D2549020803400 D2549020803600 D2549020803800
D2549020804800 D2549020805200 D2549020805600 D2549020806000 D2549020806200
D2549020806600 D2549020806800 D2549020807400 D2549020807800 D2549020808400
D2549020808800 D2549020809000 D2549020809400 D2549020810000 D2549020810400
D2549020810600 D2549020810800 D2549020811400 D2549020812200 D2549020812600
D2549020813400 D2549020813600 D2549020814200 D2549020814400 D2549020814800
D2549030400000 D2549030400600 D2549030401200 D2549030401800 D2549030402200
D2549030403800 D2549030404200 D2549030405000 D2549030405400 D2549030405600
D2549030405800 D2549030406000 D2549030406400 D2549030406800 D2549030407000
D2549030407200 D2549030407400 D2549030407600 D2549030407800 D2549030408000
D2549030408400 D2549030408600 D2549030409800 D2549030410400 D2549030508200
D2549030508400 D2549030509800 D2549030510000 D2549030510400 D2549030510800
D2549030511200 D2549030512800 D2549030513400 D2549030514600 D2549030600000
D2549030600400 D2549030600800 D2549030601000 D2549030601400 D2549030601600
D2549030602000 D2549030602200 D2549030602400 D2549030602600 D2549030603000
D2549030603600 D2549030604400 D2549030605000 D2549030605600 D2549030606200
D2549030607800 D2549030608200 D2549030609200 D2549030610400 D2549030611600
D2549030612400 D2549030612600 D2549030613800 D2549030614600 R225401115-000
R225401137-014 R225401142-000 R225401142-002 R225401145-002 R225401145-004
R225401145-006 R225401145-008 R225401145-010 R225401145-012 R225401145-014
R225401152-000 R225401152-002 R225401152-004 R225401152-006 R225401160-000
R225401168-000 R225401168-002 R225401168-008 R225401168-010 R225401168-012
R225401168-014 R225401168-016 R225401168-018 R225401168-020 R225401168-022
R225401168-024 R225401168-026 R225401168-028 R225401172-000 R225401172-004
R225401172-006 R225401172-008 R225401172-010 R225401172-012 R225401172-014

R225401172-016 R225401172-018 R225401192-000 R225401192-002 R225401195-000 R225401196-000 R225401196-002 R225401196-004 R225401196-006 R225401196-010 R225401196-034 R225401196-036 R225401196-038 R225401196-040 R225401196-046 R225401196-048 R225401196-050 R225401196-052 R225401196-056 R225401199-010 R225401600-000 R225401600-002 R225401600-004 R225401605-000 R225401605-002 R225401611-006 R225401611-012 R225401613-000 R225401619-000 R225401622-002 R225401629-000 R225401629-002 R225401639-000 R225401639-002 R225401643-000 R225401643-002 R225401643-004 R225401646-000 R225401647-000 R225401648-002 R225401656-000 R225401656-002 R225401658-000 R225401662-000 R225401662-002 R225401693-000

133. Removal and Disassembly of the Washbasin Unit

A. General

A complete disassembly of the component is not necessary and not recommended.

Do not disassemble the component more than it is necessary for:

- Cleaning
- Visual Inspection
- Replacement of defective parts.

B. Job Set-up Information

(1) Not applicable

C. Procedure

WARNING: **BE CAREFUL WHEN YOU USE SOLVENTS/CLEANING AGENTS, SEALANTS AND OTHER MATERIALS. OBEY THE MATERIAL MANUFACTURER'S INSTRUCTIONS AND THE LOCAL REGULATIONS. MAKE SURE THAT THERE IS A GOOD FLOW OF AIR THROUGH THE WORK AREA. DO NOT BREATHE THE FUMES. DO NOT SMOKE. DO NOT USE THESE MATERIALS NEAR A FLAME, SPARKS OR SOURCES OF HEAT. USE PROTECTIVE CLOTHING, GOGGLES AND GLOVES. IF YOU GET ONE OF THESE MATERIALS ON YOUR SKIN OR IN YOUR EYES, FLUSH IT AWAY WITH A FLOW OF CLEAN WATER. IF YOU GET ONE OF THESE MATERIALS IN YOUR MOUTH, GET IMMEDIATE MEDICAL AID. IN GENERAL, THESE MATERIALS ARE POISONOUS, FLAMMABLE AND SKIN IRRITANTS.**

CAUTION: **DO ALL THE WORK ON A CLEAN, SOFT SURFACE TO PREVENT DAMAGE TO THE COMPONENTS.**

SUB TASK 25-41-51-040-012-A01
D2549030407400 D2549030511200 D2549030512800 D2549030610400 R225401199-010

1. Removal and Disassembly of the Washbasin Unit (15G-1), (18-1)

NOTE: **See TABLE 3507 for the references for the replacement procedures of permanent installed parts.**

IPL FIG. ITEM	COMPONENT PART NAME	IPL FIG. ITEM	REPLACEMENT PART NAME	SEE REPAIR TASK
15G-001 15G-270	Washbasin Unit Angle	15G-280	Nut	Replacement of the Riveted Parts

Table 3507
Reference list for the replacement of permanent installed parts

WARNING: **BE SURE THAT THE LOAD IS RELEASED BEFORE YOU REMOVE THE COMPONENT.**

(a) Remove the lock pins 15G-180, the bolts 15G-160, the washers 15G-170 and the damper 15G-150 from the waste flap assembly 15G-020 and from the waste chute 18-010.

(b) Discard the lock pins 15G-180.

(c) Remove the ground cable from the washbasin assembly 15G-010.

(d) Remove the screws 15G-310, the washers 15G-220 and the washbasin assembly 15G-010 from the washbasin unit bracket 15G-240.

(e) Remove the screws 15G-210, the washers 15G-220, the nuts 15G-300 and the washbasin assembly 15G-010 from the angles 15G-270.

(f) Remove the screws 15G-190, the washers 15G-200 and the washbasin assembly 15G-010 from the lavatory structure.

(g) Disassemble the washbasin assembly 15G-010 as follows:

1 Remove the screws 15G-120, the washers 15G-130, the clip nuts 15G-140 and the waste flap assembly 15G-020.

2 Disassemble the waste flap assembly 15G-020 as follows:

a Remove the screws 15G-040, the washers 15G-050 and the flap 15G-030 from the flap hinge half 15G-070.

b Disassemble the hinge assembly 15G-060 as follows:

WARNING: BE VERY CAREFUL WHEN YOU REMOVE OR INSTALL THE SPRING. BECAUSE THERE IS REMAINING TENSION IN THE SPRING, IT CAN CAUSE YOU INJURY.

Remove the retaining rings 15G-110, the axle 15G-090 and the springs 15G-100 from the flap hinge half 15G-070 and from the washbasin hinge half 15G-080.

(h) Remove the screws 15G-290, the washers 15G-200 and the angles 15G-270 from the lavatory structure.

(i) Remove the screws 15G-260, the washers 15G-220 and the washbasin unit bracket 15G-240 from the lavatory structure.

SUB TASK 25-41-51-040-012-B01
D2549030508200 R225401172-004

2. Removal and Disassembly of the Washbasin Unit (15G-1), (18-1)

NOTE: See TABLE 3508 for the references for the replacement procedures of permanent installed parts.

IPL FIG. ITEM	COMPONENT PART NAME	IPL FIG. ITEM	REPLACEMENT PART NAME	SEE REPAIR TASK
15G-001 15G-270	Washbasin Unit Angle	15G-280	Nut	Replacement of the Riveted Parts

Table 3508
Reference list for the replacement of permanent installed parts

(a) Remove the washer 15G-239, the bracket 15G-237 and the liquid soap dispenser assembly 15G-230 from the washbasin assembly 15G-010.

NOTE: For further instructions, see CMMV 25-40-02_120C2 (liquid soap dispenser assembly).

WARNING: **BE SURE THAT THE LOAD IS RELEASED BEFORE YOU REMOVE THE COMPONENT.**

(b) Remove the lock pins 15G-180, the bolts 15G-160, the washers 15G-170 and the damper 15G-150 from the waste flap assembly 15G-020 and from the waste chute 18-010.

(c) Discard the lock pins 15G-180.

(d) Remove the ground cable from the washbasin assembly 15G-010.

(e) Remove the screws 15G-310, the washers 15G-220 and the washbasin assembly 15G-010 from the washbasin unit bracket 15G-240.

(f) Remove the screws 15G-210, the washers 15G-220, the nuts 15G-300 and the washbasin assembly 15G-010 from the angles 15G-270.

(g) Remove the screws 15G-190, the washers 15G-200 and the washbasin assembly 15G-010 from the lavatory structure.

(h) Disassemble the washbasin assembly 15G-010 as follows:

1 Remove the screws 15G-120, the washers 15G-130, the clip nuts 15G-140 and the waste flap assembly 15G-020.

2 Disassemble the waste flap assembly 15G-020 as follows:

a Remove the screws 15G-040, the washers 15G-050 and the flap 15G-030 from the flap hinge half 15G-070.

b Disassemble the hinge assembly 15G-060 as follows:

WARNING: **BE VERY CAREFUL WHEN YOU REMOVE OR INSTALL THE SPRING. BECAUSE THERE IS REMAINING TENSION IN THE SPRING, IT CAN CAUSE YOU INJURY.**

Remove the retaining rings 15G-110, the axle 15G-090 and the springs 15G-100 from the flap hinge half 15G-070 and from the washbasin hinge half 15G-080.

(i) Remove the screws 15G-290, the washers 15G-200 and the angles 15G-270 from the lavatory structure.

(j) Remove the screws 15G-260, the washers 15G-220 and the washbasin unit bracket 15G-240 from the lavatory structure.

SUB TASK 25-41-51-040-012-C01

D2549010514600 D2549010604400 D2549010605000 D2549010607200 D2549010608800 D2549010610800 D2549020509600 D2549020810000 D2549020810600 D2549020811400 D2549020812200 D2549030403800 D2549030405800 D2549030509800 D2549030602000 D2549030605000 D2549030606200 D2549030609200 D2549030611600 D2549030613800 R225401145-002 R225401145-004 R225401145-006 R225401145-008 R225401145-010 R225401145-012 R225401145-014 R225401172-000 R225401172-006 R225401172-008 R225401172-010 R225401172-012 R225401172-014 R225401172-016 R225401172-018 R225401613-000 R225401646-000 R225401647-000 R225401656-000 R225401656-002

3. Removal and Disassembly of the Washbasin Unit (15G-1), (18-1)

NOTE: **See TABLE 3509 for the references for the replacement procedures of permanent installed parts.**

IPL FIG. ITEM	COMPONENT PART NAME	IPL FIG. ITEM	REPLACEMENT PART NAME	SEE REPAIR TASK
15G-001 15G-270	Washbasin Unit Angle	15G-280	Nut	Replacement of the Riveted Parts

Table 3509
Reference list for the replacement of permanent installed parts

(a) Remove the liquid soap dispenser bottle 15G-230 and the liquid soap dispenser support 15G-235 from the washbasin assembly 15G-010.

(b) Remove the liquid soap dispenser bottle 15G-230 from the liquid soap dispenser support 15G-235.

WARNING: **BE SURE THAT THE LOAD IS RELEASED BEFORE YOU REMOVE THE COMPONENT.**

(c) Remove the lock pins 15G-180, the bolts 15G-160, the washers 15G-170 and the damper 15G-150 from the waste flap assembly 15G-020 and from the waste chute 18-010.

(d) Discard the lock pins 15G-180.

(e) Remove the ground cable from the washbasin assembly 15G-010.

(f) Remove the screws 15G-310, the washers 15G-220 and the washbasin assembly 15G-010 from the washbasin unit bracket 15G-240.

(g) Remove the screws 15G-210, the washers 15G-220, the nuts 15G-300 and the washbasin assembly 15G-010 from the angles 15G-270.

(h) Remove the screws 15G-190, the washers 15G-200 and the washbasin assembly 15G-010 from the lavatory structure.

(i) Disassemble the washbasin assembly 15G-010 as follows:

1 Remove the screws 15G-120, the washers 15G-130, the clip nuts 15G-140 and the waste flap assembly 15G-020.

2 Disassemble the waste flap assembly 15G-020 as follows:
a Remove the screws 15G-040, the washers 15G-050 and the flap 15G-030 from the flap hinge half 15G-070.
b Disassemble the hinge assembly 15G-060 as follows:

WARNING: BE VERY CAREFUL WHEN YOU REMOVE OR INSTALL THE SPRING. BECAUSE THERE IS REMAINING TENSION IN THE SPRING, IT CAN CAUSE YOU INJURY.

Remove the retaining rings 15G-110, the axle 15G-090 and the springs 15G-100 from the flap hinge half 15G-070 and from the washbasin hinge half 15G-080.

(j) Remove the screws 15G-290, the washers 15G-200 and the angles 15G-270 from the lavatory structure.

(k) Remove the screws 15G-260, the washers 15G-220 and the washbasin unit bracket 15G-240 from the lavatory structure.

SUB TASK 25-41-51-040-012-D01
D2549030510800 D2549030513400

4. Removal and Disassembly of the Washbasin Unit (15G-1), (18-1)

NOTE: **See TABLE 3510 for the references for the replacement procedures of permanent installed parts.**

IPL FIG. ITEM	COMPONENT PART NAME	IPL FIG. ITEM	REPLACEMENT PART NAME	SEE REPAIR TASK
15G-001 15G-270	Washbasin Unit Angle	15G-280	Nut	Replacement of the Riveted Parts

Table 3510
Reference list for the replacement of permanent installed parts

(a) Remove the liquid soap dispenser assembly 15G-230 from the washbasin assembly 15G-010.

NOTE: **For further instructions, see CMMV 25-40-02_120C2 (liquid soap dispenser assembly).**

(b) Remove the hand lotion dispenser 15G-320 and the liquid soap dispenser support 15G-330 from the washbasin assembly 15G-010.

(c) Remove the hand lotion dispenser 15G-320 from the liquid soap dispenser support 15G-330.

WARNING: **BE SURE THAT THE LOAD IS RELEASED BEFORE YOU REMOVE THE COMPONENT.**

(d) Remove the lock pins 15G-180, the bolts 15G-160, the washers 15G-170 and the damper 15G-150 from the waste flap assembly 15G-020 and from the waste chute 18-010.

(e) Discard the lock pins 15G-180.

(f) Remove the ground cable from the washbasin assembly 15G-010.

(g) Remove the screws 15G-310, the washers 15G-220 and the washbasin assembly 15G-010 from the washbasin unit bracket 15G-240.

(h) Remove the screws 15G-210, the washers 15G-220, the nuts 15G-300 and the washbasin assembly 15G-010 from the angles 15G-270.

(i) Remove the screws 15G-190, the washers 15G-200 and the washbasin assembly 15G-010 from the lavatory structure.

(j) Disassemble the washbasin assembly 15G-010 as follows:

1 Remove the screws 15G-120, the washers 15G-130, the clip nuts 15G-140 and the waste flap assembly 15G-020.

2 Disassemble the waste flap assembly 15G-020 as follows:

a Remove the screws 15G-040, the washers 15G-050 and the flap 15G-030 from the flap hinge half 15G-070.

b Disassemble the hinge assembly 15G-060 as follows:

WARNING: BE VERY CAREFUL WHEN YOU REMOVE OR INSTALL THE SPRING. BECAUSE THERE IS REMAINING TENSION IN THE SPRING, IT CAN CAUSE YOU INJURY.

Remove the retaining rings 15G-110, the axle 15G-090 and the springs 15G-100 from the flap hinge half 15G-070 and from the washbasin hinge half 15G-080.

(k) Remove the screws 15G-290, the washers 15G-200 and the angles 15G-270 from the lavatory structure.

(l) Remove the screws 15G-260, the washers 15G-220 and the washbasin unit bracket 15G-240 from the lavatory structure.

SUB TASK 25-41-51-040-012-E01

D2549010400000 D2549010400400 D2549010400800 D2549010402600
D2549010600800 D2549010601600 D2549010602000 D2549010602200
D2549010602800 D2549010603000 D2549010603400 D2549010603800
D2549010604000 D2549010604200 D2549010604600 D2549010606600
D2549010607400 D2549010609000 D2549010609200 D2549010609600
D2549010609800 D2549010610400 D2549010611000 D2549010611600
D2549010611800 D2549010612000 D2549010612400 D2549010613000
D2549010613800 D2549010614200 D2549010614600 D2549010614800
D2549020400000 D2549020400200 D2549020400400 D2549020404200
D2549020404600 D2549020405000 D2549020405400 D2549020405600
D2549020405800 D2549020507400 D2549020507600 D2549020508800
D2549020509800 D2549020510000 D2549020510600 D2549020510800
D2549020511200 D2549020511600 D2549020511800 D2549020512000
D2549020512400 D2549020513600 D2549020514400 D2549020514800
D2549020612000 D2549020700200 D2549020700600 D2549020701600
D2549020702200 D2549020702400 D2549020702600 D2549020702800
D2549020703400 D2549020704600 D2549020704800 D2549020705000
D2549020705200 D2549020705400 D2549020706000 D2549020706800
D2549020707200 D2549020707400 D2549020707600 D2549020707800
D2549020708000 D2549020708200 D2549020708600 D2549020708800
D2549020709400 D2549020709800 D2549020711200 D2549020711400

D2549020711600 D2549020712200 D2549020713200 D2549020713400 D2549020713600 D2549020714400 D2549020714600 D2549020800000 D2549020800600 D2549020802000 D2549020802800 D2549020803000 D2549020803200 D2549020803400 D2549020803600 D2549020803800 D2549020804800 D2549020805200 D2549020805600 D2549020806000 D2549020806200 D2549020806600 D2549020806800 D2549020807400 D2549020807800 D2549020808400 D2549020808800 D2549020809000 D2549020809400 D2549020810400 D2549020810800 D2549020812600 D2549020813400 D2549020813600 D2549020814200 D2549020814400 D2549020814800 D2549030400000 D2549030400600 D2549030401200 D2549030401800 D2549030402200 D2549030404200 D2549030405000 D2549030405400 D2549030405600 D2549030406000 D2549030406400 D2549030406800 D2549030407000 D2549030407200 D2549030407600 D2549030407800 D2549030408000 D2549030408400 D2549030408600 D2549030409800 D2549030410400 D2549030508400 D2549030510000 D2549030510400 D2549030514600 D2549030600000 D2549030600400 D2549030600800 D2549030601000 D2549030601400 D2549030601600 D2549030602200 D2549030602400 D2549030602600 D2549030603000 D2549030603600 D2549030604400 D2549030605600 D2549030607800 D2549030608200 D2549030612400 D2549030612600 D2549030614600 R225401115-000 R225401137-014 R225401152-000 R225401152-002 R225401152-004 R225401152-006 R225401160-000 R225401168-000 R225401168-002 R225401168-008 R225401168-010 R225401168-012 R225401168-014 R225401168-016 R225401168-018 R225401168-020 R225401168-022 R225401168-024 R225401168-026 R225401168-028 R225401192-000 R225401192-002 R225401195-000 R225401196-000 R225401196-002 R225401196-004 R225401196-006 R225401196-010 R225401196-034 R225401196-036 R225401196-038 R225401196-040 R225401196-046 R225401196-048 R225401196-050 R225401196-052 R225401196-056 R225401600-000 R225401600-002 R225401600-004 R225401605-000 R225401605-002 R225401611-006 R225401611-012 R225401619-000 R225401622-002 R225401629-000 R225401629-002 R225401639-000 R225401639-002 R225401643-000 R225401643-002 R225401643-004 R225401648-002 R225401658-000 R225401662-000 R225401662-002 R225401693-000

5. Removal and Disassembly of the Washbasin Unit (15G-1), (18-1)

NOTE: **See TABLE 3511 for the references for the replacement procedures of permanent installed parts.**

IPL FIG. ITEM	COMPONENT PART NAME	IPL FIG. ITEM	REPLACEMENT PART NAME	SEE REPAIR TASK
15G-001 15G-270	Washbasin Unit Angle	15G-280	Nut	Replacement of the Riveted Parts

Table 3511
Reference list for the replacement of permanent installed parts

(a) Remove the liquid soap dispenser 15G-230 from the washbasin assembly 15G-010.

NOTE: **For further instructions, see CMMV 25-40-01_120C2 (liquid soap dispenser).**

WARNING: **BE SURE THAT THE LOAD IS RELEASED BEFORE YOU REMOVE THE COMPONENT.**

(b) Remove the lock pins 15G-180, the bolts 15G-160, the washers 15G-170 and the damper 15G-150 from the waste flap assembly 15G-020 and from the waste chute 18-010.

(c) Discard the lock pins 15G-180.

(d) Remove the ground cable from the washbasin assembly 15G-010.

(e) Remove the screws 15G-310, the washers 15G-220 and the washbasin assembly 15G-010 from the washbasin unit bracket 15G-240.

(f) Remove the screws 15G-210, the washers 15G-220, the nuts 15G-300 and the washbasin assembly 15G-010 from the angles 15G-270.

(g) Remove the screws 15G-190, the washers 15G-200 and the washbasin assembly 15G-010 from the lavatory structure.

(h) Disassemble the washbasin assembly 15G-010 as follows:

1 Remove the screws 15G-120, the washers 15G-130, the clip nuts 15G-140 and the waste flap assembly 15G-020.

2 Disassemble the waste flap assembly 15G-020 as follows:

a Remove the screws 15G-040, the washers 15G-050 and the flap 15G-030 from the flap hinge half 15G-070.

b Disassemble the hinge assembly 15G-060 as follows:

WARNING: BE VERY CAREFUL WHEN YOU REMOVE OR INSTALL THE SPRING. BECAUSE THERE IS REMAINING TENSION IN THE SPRING, IT CAN CAUSE YOU INJURY.

Remove the retaining rings 15G-110, the axle 15G-090 and the springs 15G-100 from the flap hinge half 15G-070 and from the washbasin hinge half 15G-080.

(i) Remove the screws 15G-290, the washers 15G-200 and the angles 15G-270 from the lavatory structure.

(j) Remove the screws 15G-260, the washers 15G-220, 15G-225 and the washbasin unit bracket 15G-240 from the lavatory structure.

SUB TASK 25-41-51-040-012-F01
D2549020704400 R225401142-002

6. Removal and Disassembly of the Washbasin Unit (15G-1), (18-1)

NOTE: See TABLE 3512 for the references for the replacement procedures of permanent installed parts.

IPL FIG. ITEM	COMPONENT PART NAME	IPL FIG. ITEM	REPLACEMENT PART NAME	SEE REPAIR TASK
15G-001 15G-270	Washbasin Unit Angle	15G-280	Nut	Replacement of the Riveted Parts

Table 3512
Reference list for the replacement of permanent installed parts

(a) Remove the liquid soap dispenser 15G-230 from the washbasin assembly 15G-010.

NOTE: For further instructions, see CMMV 25-40-01_DL161 (liquid soap dispenser).

WARNING: **BE SURE THAT THE LOAD IS RELEASED BEFORE YOU REMOVE THE COMPONENT.**

(b) Remove the lock pins 15G-180, the bolts 15G-160, the washers 15G-170 and the damper 15G-150 from the waste flap assembly 15G-020 and from the waste chute 18-010.

(c) Discard the lock pins 15G-180.

(d) Remove the ground cable from the washbasin assembly 15G-010.

(e) Remove the screws 15G-310, the washers 15G-220 and the washbasin assembly 15G-010 from the washbasin unit bracket 15G-240.

(f) Remove the screws 15G-210, the washers 15G-220, the nuts 15G-300 and the washbasin assembly 15G-010 from the angles 15G-270.

(g) Remove the screws 15G-190, the washers 15G-200 and the washbasin assembly 15G-010 from the lavatory structure.

(h) Disassemble the washbasin assembly 15G-010 as follows:

1 Remove the screws 15G-120, the washers 15G-130, the clip nuts 15G-140 and the waste flap assembly 15G-020.

2 Disassemble the waste flap assembly 15G-020 as follows:

a Remove the screws 15G-040, the washers 15G-050 and the flap 15G-030 from the flap hinge half 15G-070.

b Disassemble the hinge assembly 15G-060 as follows:

WARNING: **BE VERY CAREFUL WHEN YOU REMOVE OR INSTALL THE SPRING. BECAUSE THERE IS REMAINING TENSION IN THE SPRING, IT CAN CAUSE YOU INJURY.**

Remove the retaining rings 15G-110, the axle 15G-090 and the springs 15G-100 from the flap hinge half 15G-070 and from the washbasin hinge half 15G-080.

(i) Remove the screws 15G-290, the washers 15G-200 and the angles 15G-270 from the lavatory structure.

(j) Remove the screws 15G-260, the washers 15G-220 and the washbasin unit bracket 15G-240 from the lavatory structure.

SUB TASK 25-41-51-040-012-G01
D2549020614800 D2549020704200 R225401142-000

7. Removal and Disassembly of the Washbasin Unit (15G-1), (18-1)

NOTE: **See TABLE 3513 for the references for the replacement procedures of permanent installed parts.**

IPL FIG. ITEM	COMPONENT PART NAME	IPL FIG. ITEM	REPLACEMENT PART NAME	SEE REPAIR TASK
15G-001 15G-270	Washbasin Unit Angle	15G-280	Nut	Replacement of the Riveted Parts

Table 3513
Reference list for the replacement of permanent installed parts

(a) Remove the liquid soap dispenser assembly 15G-230 from the washbasin assembly 15G-010.

WARNING: **BE SURE THAT THE LOAD IS RELEASED BEFORE YOU REMOVE THE COMPONENT.**

(b) Remove the lock pins 15G-180, the bolts 15G-160, the washers 15G-170 and the damper 15G-150 from the waste flap assembly 15G-020 and from the waste chute 18-010.

(c) Discard the lock pins 15G-180.

(d) Remove the ground cable from the washbasin assembly 15G-010.

(e) Remove the screws 15G-310, the washers 15G-220 and the washbasin assembly 15G-010 from the washbasin unit bracket 15G-240.

(f) Remove the screws 15G-210, the washers 15G-220, the nuts 15G-300 and the washbasin assembly 15G-010 from the angles 15G-270.

(g) Remove the screws 15G-190, the washers 15G-200 and the washbasin assembly 15G-010 from the lavatory structure.

(h) Disassemble the washbasin assembly 15G-010 as follows:

1 Remove the screws 15G-120, the washers 15G-130, the clip nuts 15G-140 and the waste flap assembly 15G-020.

2 Disassemble the waste flap assembly 15G-020 as follows:
- a Remove the screws 15G-040, the washers 15G-050 and the flap 15G-030 from the flap hinge half 15G-070.
- b Disassemble the hinge assembly 15G-060 as follows:

WARNING: BE VERY CAREFUL WHEN YOU REMOVE OR INSTALL THE SPRING. BECAUSE THERE IS REMAINING TENSION IN THE SPRING, IT CAN CAUSE YOU INJURY.

Remove the retaining rings 15G-110, the axle 15G-090 and the springs 15G-100 from the flap hinge half 15G-070 and from the washbasin hinge half 15G-080.

(i) Remove the screws 15G-290, the washers 15G-200 and the angles 15G-270 from the lavatory structure.

(j) Remove the screws 15G-260, the washers 15G-220 and the washbasin unit bracket 15G-240 from the lavatory structure.

TASK 25-41-51-000-812-J01
D2549010403000 D2549010604800 D2549010606000 D2549010610000 D2549020404800 D2549020508400 D2549020508600 D2549020513200 D2549020513800 D2549020705600 D2549020707000 D2549020709200 D2549020710200 D2549020710400 D2549020710600 D2549020801800 D2549020805800 D2549020808200 D2549020811800 D2549020812800 D2549020813000 D2549020813800 D2549030406600 D2549030503800 D2549030600600 D2549030608600 D2549030611000 D2549030614000 D2549030614800 R225401136-000 R225401136-004 R225401136-010 R225401136-018 R225401136-020 R225401136-022 R225401152-008 R225401196-012 R225401196-014 R225401196-058 R225401196-060 R225401603-000

134. Removal and Disassembly of the Washbasin Unit

A. General

A complete disassembly of the component is not necessary and not recommended.

Do not disassemble the component more than it is necessary for:

- Cleaning
- Visual Inspection
- Replacement of defective parts.

B. Job Set-up Information

(1) Not applicable

C. Procedure

WARNING: BE CAREFUL WHEN YOU USE SOLVENTS/CLEANING AGENTS, SEALANTS AND OTHER MATERIALS. OBEY THE MATERIAL MANUFACTURER'S INSTRUCTIONS AND THE LOCAL REGULATIONS. MAKE SURE THAT THERE IS A GOOD FLOW OF AIR THROUGH THE WORK AREA. DO NOT BREATHE THE FUMES. DO NOT SMOKE. DO NOT USE THESE MATERIALS NEAR A FLAME, SPARKS OR SOURCES OF HEAT. USE PROTECTIVE CLOTHING, GOGGLES AND GLOVES. IF YOU GET ONE OF THESE MATERIALS ON YOUR SKIN OR IN YOUR EYES, FLUSH IT AWAY WITH A FLOW OF CLEAN WATER. IF YOU GET ONE OF THESE MATERIALS IN YOUR MOUTH, GET IMMEDIATE MEDICAL AID. IN GENERAL, THESE MATERIALS ARE POISONOUS, FLAMMABLE AND SKIN IRRITANTS.

CAUTION: DO ALL THE WORK ON A CLEAN, SOFT SURFACE TO PREVENT DAMAGE TO THE COMPONENTS.

SUB TASK 25-41-51-040-013-A01

D2549020710600 D2549020805800 D2549020811800 D2549020813800 R225401152-008 R225401196-012 R225401196-014 R225401196-058 R225401196-060

1. Removal and Disassembly of the Washbasin Unit (15H-1), (18-1)

NOTE: **See TABLE 3514 for the references for the replacement procedures of permanent installed parts.**

IPL FIG. ITEM	COMPONENT PART NAME	IPL FIG. ITEM	REPLACEMENT PART NAME	SEE REPAIR TASK
15H-001 15H-270	Washbasin Unit Angle	15H-280	Nut	Replacement of the Riveted Parts

Table 3514
Reference list for the replacement of permanent installed parts

WARNING: **BE SURE THAT THE LOAD IS RELEASED BEFORE YOU REMOVE THE COMPONENT.**

(a) Remove the lock pins 15H-180, the bolts 15H-160, the washers 15H-170 and the damper 15H-150 from the waste flap assembly 15H-020 and from the waste chute 18-010.

(b) Discard the lock pins 15H-180.

(c) Remove the ground cable from the washbasin assembly 15H-010.

(d) Remove the screws 15H-310, the washers 15H-220 and the washbasin assembly 15H-010 from the washbasin unit bracket 15H-240.

(e) Remove the screws 15H-210, the washers 15H-220, the nuts 15H-300 and the washbasin assembly 15H-010 from the angles 15H-270.

(f) Remove the screws 15H-190, the washers 15H-200 and the washbasin assembly 15H-010 from the lavatory structure.

(g) Disassemble the washbasin assembly 15H-010 as follows:

1 Remove the screws 15H-120, the washers 15H-130, the clip nuts 15H-140 and the waste flap assembly 15H-020.

2 Disassemble the waste flap assembly 15H-020 as follows:

a Remove the screws 15H-040, the washers 15H-050 and the flap 15H-030 from the flap hinge half 15H-070.

b Disassemble the hinge assembly 15H-060 as follows:

WARNING: BE VERY CAREFUL WHEN YOU REMOVE OR INSTALL THE SPRING. BECAUSE THERE IS REMAINING TENSION IN THE SPRING, IT CAN CAUSE YOU INJURY.

Remove the retaining rings 15H-110, the axle 15H-090 and the springs 15H-100 from the flap hinge half 15H-070 and from the washbasin hinge half 15H-080.

(h) Remove the screws 15H-290, the washers 15H-200 and the angles 15H-270 from the lavatory structure.

(i) Remove the screws 15H-260, the washers 15H-220, 15H-225 and the washbasin unit bracket 15H-240 from the lavatory structure.

SUB TASK 25-41-51-040-013-B01
D2549010606000 D2549020508400 D2549020705600 D2549020709200

2. Removal and Disassembly of the Washbasin Unit (15H-1), (18-1)

NOTE: See TABLE 3515 for the references for the replacement procedures of permanent installed parts.

IPL FIG. ITEM	COMPONENT PART NAME	IPL FIG. ITEM	REPLACEMENT PART NAME	SEE REPAIR TASK
15H-001 15H-270	Washbasin Unit Angle	15H-280	Nut	Replacement of the Riveted Parts

Table 3515
Reference list for the replacement of permanent installed parts

(a) Remove the liquid soap dispenser 15H-230 from the washbasin assembly 15H-010.

NOTE: For further instructions, see CMMV 25-40-01_DL161 (liquid soap dispenser).

WARNING: **BE SURE THAT THE LOAD IS RELEASED BEFORE YOU REMOVE THE COMPONENT.**

(b) Remove the lock pins 15H-180, the bolts 15H-160, the washers 15H-170 and the damper 15H-150 from the waste flap assembly 15H-020 and from the waste chute 18-010.

(c) Discard the lock pins 15H-180.

(d) Remove the ground cable from the washbasin assembly 15H-010.

(e) Remove the screws 15H-310, the washers 15H-220 and the washbasin assembly 15H-010 from the washbasin unit bracket 15H-240.

(f) Remove the screws 15H-210, the washers 15H-220, the nuts 15H-300 and the washbasin assembly 15H-010 from the angles 15H-270.

(g) Remove the screws 15H-190, the washers 15H-200 and the washbasin assembly 15H-010 from the lavatory structure.

(h) Disassemble the washbasin assembly 15H-010 as follows:

1 Remove the screws 15H-120, the washers 15H-130, the clip nuts 15H-140 and the waste flap assembly 15H-020.

2 Disassemble the waste flap assembly 15H-020 as follows:

a Remove the screws 15H-040, the washers 15H-050 and the flap 15H-030 from the flap hinge half 15H-070.

b Disassemble the hinge assembly 15H-060 as follows:

WARNING: **BE VERY CAREFUL WHEN YOU REMOVE OR INSTALL THE SPRING. BECAUSE THERE IS REMAINING TENSION IN THE SPRING, IT CAN CAUSE YOU INJURY.**

Remove the retaining rings 15H-110, the axle 15H-090 and the springs 15H-100 from the flap hinge half 15H-070 and from the washbasin hinge half 15H-080.

(i) Remove the screws 15H-290, the washers 15H-200 and the angles 15H-270 from the lavatory structure.

(j) Remove the screws 15H-260, the washers 15H-220 and the washbasin unit bracket 15H-240 from the lavatory structure.

SUB TASK 25-41-51-040-013-C01
D2549020508600 D2549020513200 D2549020710200 D2549020710400 D2549030406600 D2549030608600 D2549030611000 R225401136-000 R225401136-004 R225401136-010 R225401136-018 R225401136-020 R225401136-022

3. Removal and Disassembly of the Washbasin Unit (15H-1), (18-1)

NOTE: **See TABLE 3516 for the references for the replacement procedures of permanent installed parts.**

IPL FIG. ITEM	COMPONENT PART NAME	IPL FIG. ITEM	REPLACEMENT PART NAME	SEE REPAIR TASK
15H-001 15H-270	Washbasin Unit Angle	15H-280	Nut	Replacement of the Riveted Parts

Table 3516
Reference list for the replacement of permanent installed parts

(a) Remove the washer 15H-350, the bracket 15H-340 and the liquid soap dispenser 15H-230 from the washbasin assembly 15H-010.

NOTE: **For further instructions, see CMMV 25-40-01_120C2 (liquid soap dispenser).**

(b) Remove the hand lotion dispenser 15H-320 and the liquid soap dispenser support 15H-330 from the washbasin assembly 15H-010.

(c) Remove the hand lotion dispenser 15H-320 from the liquid soap dispenser support 15H-330.

WARNING: **BE SURE THAT THE LOAD IS RELEASED BEFORE YOU REMOVE THE COMPONENT.**

(d) Remove the lock pins 15H-180, the bolts 15H-160, the washers 15H-170 and the damper 15H-150 from the waste flap assembly 15H-020 and from the waste chute 18-010.

(e) Discard the lock pins 15H-180.

(f) Remove the ground cable from the washbasin assembly 15H-010.

(g) Remove the screws 15H-310, the washers 15H-220 and the washbasin assembly 15H-010 from the washbasin unit bracket 15H-240.

(h) Remove the screws 15H-210, the washers 15H-220, the nuts 15H-300 and the washbasin assembly 15H-010 from the angles 15H-270.

(i) Remove the screws 15H-190, the washers 15H-200 and the washbasin assembly 15H-010 from the lavatory structure.

(j) Disassemble the washbasin assembly 15H-010 as follows:

1 Remove the screws 15H-120, the washers 15H-130, the clip nuts 15H-140 and the waste flap assembly 15H-020.

2 Disassemble the waste flap assembly 15H-020 as follows:
a Remove the screws 15H-040, the washers 15H-050 and the flap 15H-030 from the flap hinge half 15H-070.
b Disassemble the hinge assembly 15H-060 as follows:

WARNING: BE VERY CAREFUL WHEN YOU REMOVE OR INSTALL THE SPRING. BECAUSE THERE IS REMAINING TENSION IN THE SPRING, IT CAN CAUSE YOU INJURY.

Remove the retaining rings 15H-110, the axle 15H-090 and the springs 15H-100 from the flap hinge half 15H-070 and from the washbasin hinge half 15H-080.

(k) Remove the screws 15H-290, the washers 15H-200 and the angles 15H-270 from the lavatory structure.

(l) Remove the screws 15H-260, the washers 15H-220 and the washbasin unit bracket 15H-240 from the lavatory structure.

SUB TASK 25-41-51-040-013-D01
D2549010403000 D2549010604800 D2549010610000 D2549020404800 D2549020513800 D2549020707000 D2549020801800 D2549020808200 D2549020812800 D2549020813000 D2549030503800 D2549030600600 D2549030614000 D2549030614800 R225401603-000

4. Removal and Disassembly of the Washbasin Unit (15H-1), (18-1)

NOTE: **See TABLE 3517 for the references for the replacement procedures of permanent installed parts.**

IPL FIG. ITEM	COMPONENT PART NAME	IPL FIG. ITEM	REPLACEMENT PART NAME	SEE REPAIR TASK
15H-001 15H-270	Washbasin Unit Angle	15H-280	Nut	Replacement of the Riveted Parts

Table 3517
Reference list for the replacement of permanent installed parts

(a) Remove the liquid soap dispenser 15H-230 from the washbasin assembly 15H-010.

NOTE: **For further instructions, see CMMV 25-40-01_120C2 (liquid soap dispenser).**

WARNING: **BE SURE THAT THE LOAD IS RELEASED BEFORE YOU REMOVE THE COMPONENT.**

(b) Remove the lock pins 15H-180, the bolts 15H-160, the washers 15H-170 and the damper 15H-150 from the waste flap assembly 15H-020 and from the waste chute 18-010.

(c) Discard the lock pins 15H-180.

(d) Remove the ground cable from the washbasin assembly 15H-010.

(e) Remove the screws 15H-310, the washers 15H-220 and the washbasin assembly 15H-010 from the washbasin unit bracket 15H-240.

(f) Remove the screws 15H-210, the washers 15H-220, the nuts 15H-300 and the washbasin assembly 15H-010 from the angles 15H-270.

(g) Remove the screws 15H-190, the washers 15H-200 and the washbasin assembly 15H-010 from the lavatory structure.

(h) Disassemble the washbasin assembly 15H-010 as follows:

1 Remove the screws 15H-120, the washers 15H-130, the clip nuts 15H-140 and the waste flap assembly 15H-020.

2 Disassemble the waste flap assembly 15H-020 as follows:

a Remove the screws 15H-040, the washers 15H-050 and the flap 15H-030 from the flap hinge half 15H-070.

b Disassemble the hinge assembly 15H-060 as follows:

WARNING: BE VERY CAREFUL WHEN YOU REMOVE OR INSTALL THE SPRING. BECAUSE THERE IS REMAINING TENSION IN THE SPRING, IT CAN CAUSE YOU INJURY.

Remove the retaining rings 15H-110, the axle 15H-090 and the springs 15H-100 from the flap hinge half 15H-070 and from the washbasin hinge half 15H-080.

(i) Remove the screws 15H-290, the washers 15H-200 and the angles 15H-270 from the lavatory structure.

(j) Remove the screws 15H-260, the washers 15H-220 and the washbasin unit bracket 15H-240 from the lavatory structure.

TASK 25-41-51-000-812-K01
D2549010605200 D2549010607600 D2549010611200 D2549030605800

135. Removal and Disassembly of the Washbasin Unit

A. General

A complete disassembly of the component is not necessary and not recommended.

Do not disassemble the component more than it is necessary for:

- Cleaning
- Visual Inspection
- Replacement of defective parts.

B. Job Set-up Information

(1) Not applicable

C. Procedure

WARNING: BE CAREFUL WHEN YOU USE SOLVENTS/CLEANING AGENTS, SEALANTS AND OTHER MATERIALS. OBEY THE MATERIAL MANUFACTURER'S INSTRUCTIONS AND THE LOCAL REGULATIONS. MAKE SURE THAT THERE IS A GOOD FLOW OF AIR THROUGH THE WORK AREA. DO NOT BREATHE THE FUMES. DO NOT SMOKE. DO NOT USE THESE MATERIALS NEAR A FLAME, SPARKS OR SOURCES OF HEAT. USE PROTECTIVE CLOTHING, GOGGLES AND GLOVES. IF YOU GET ONE OF THESE MATERIALS ON YOUR SKIN OR IN YOUR EYES, FLUSH IT AWAY WITH A FLOW OF CLEAN WATER. IF YOU GET ONE OF THESE MATERIALS IN YOUR MOUTH, GET IMMEDIATE MEDICAL AID. IN GENERAL, THESE MATERIALS ARE POISONOUS, FLAMMABLE AND SKIN IRRITANTS.

CAUTION: DO ALL THE WORK ON A CLEAN, SOFT SURFACE TO PREVENT DAMAGE TO THE COMPONENTS.

SUB TASK 25-41-51-040-014-A01

1. Removal and Disassembly of the Washbasin Unit (15J-1), (18-1)

NOTE: **See TABLE 3518 for the references for the replacement procedures of permanent installed parts.**

IPL FIG. ITEM	COMPONENT PART NAME	IPL FIG. ITEM	REPLACEMENT PART NAME	SEE REPAIR TASK
15J-001 15J-270	Washbasin Unit Angle	15J-280	Nut	Replacement of the Riveted Parts

Table 3518
Reference list for the replacement of permanent installed parts

(a) Remove the liquid soap dispenser assembly 15J-230 from the washbasin assembly 15J-010.

NOTE: **For further instructions, see CMMV 25-40-03_120C2 (liquid soap dispenser assembly).**

WARNING: **BE SURE THAT THE LOAD IS RELEASED BEFORE YOU REMOVE THE COMPONENT.**

(b) Remove the lock pins 15J-180, the bolts 15J-160, the washers 15J-170 and the damper 15J-150 from the waste flap assembly 15J-020 and from the waste chute 18-010.

(c) Discard the lock pins 15J-180.

(d) Remove the ground cable from the washbasin assembly 15J-010.

(e) Remove the screws 15J-310, the washers 15J-220 and the washbasin assembly 15J-010 from the washbasin unit bracket 15J-240.

(f) Remove the screws 15J-210, the washers 15J-220, the nuts 15J-300 and the washbasin assembly 15J-010 from the angles 15J-270.

(g) Remove the screws 15J-190, the washers 15J-200 and the washbasin assembly 15J-010 from the lavatory structure.

(h) Disassemble the washbasin assembly 15J-010 as follows:

1 Remove the screws 15J-120, the washers 15J-130, the clip nuts 15J-140 and the waste flap assembly 15J-020.

2 Disassemble the waste flap assembly 15J-020 as follows:

a Remove the screws 15J-040, the washers 15J-050 and the flap 15J-030 from the flap hinge half 15J-070.

b Disassemble the hinge assembly 15J-060 as follows:

WARNING: BE VERY CAREFUL WHEN YOU REMOVE OR INSTALL THE SPRING. BECAUSE THERE IS REMAINING TENSION IN THE SPRING, IT CAN CAUSE YOU INJURY.

Remove the retaining rings 15J-110, the axle 15J-090 and the springs 15J-100 from the flap hinge half 15J-070 and from the washbasin hinge half 15J-080.

(i) Remove the screws 15J-290, the washers 15J-200 and the angles 15J-270 from the lavatory structure.

(j) Remove the screws 15J-260, the washers 15J-220 and the washbasin unit bracket 15J-240 from the lavatory structure.

TASK 25-41-51-000-812-L01
D2549010402000 D2549010402800 D2549010611400 D2549020403800 D2549020406200 D2549020800400 D2549020802600 D2549020813200 R225401196-016 R225401196-062

136. Removal and Disassembly of the Washbasin Unit

A. General

A complete disassembly of the component is not necessary and not recommended.

Do not disassemble the component more than it is necessary for:

- Cleaning
- Visual Inspection
- Replacement of defective parts.

B. Job Set-up Information

(1) Not applicable

C. Procedure

WARNING: **BE CAREFUL WHEN YOU USE SOLVENTS/CLEANING AGENTS, SEALANTS AND OTHER MATERIALS. OBEY THE MATERIAL MANUFACTURER'S INSTRUCTIONS AND THE LOCAL REGULATIONS. MAKE SURE THAT THERE IS A GOOD FLOW OF AIR THROUGH THE WORK AREA. DO NOT BREATHE THE FUMES. DO NOT SMOKE. DO NOT USE THESE MATERIALS NEAR A FLAME, SPARKS OR SOURCES OF HEAT. USE PROTECTIVE CLOTHING, GOGGLES AND GLOVES. IF YOU GET ONE OF THESE MATERIALS ON YOUR SKIN OR IN YOUR EYES, FLUSH IT AWAY WITH A FLOW OF CLEAN WATER. IF YOU GET ONE OF THESE MATERIALS IN YOUR MOUTH, GET IMMEDIATE MEDICAL AID. IN GENERAL, THESE MATERIALS ARE POISONOUS, FLAMMABLE AND SKIN IRRITANTS.**

CAUTION: **DO ALL THE WORK ON A CLEAN, SOFT SURFACE TO PREVENT DAMAGE TO THE COMPONENTS.**

SUB TASK 25-41-51-040-015-A01
D2549020406200 R225401196-016 R225401196-062

1. Removal and Disassembly of the Washbasin Unit (15K-1), (18-1)

NOTE: **See TABLE 3519 for the references for the replacement procedures of permanent installed parts.**

IPL FIG. ITEM	COMPONENT PART NAME	IPL FIG. ITEM	REPLACEMENT PART NAME	SEE REPAIR TASK
15K-001 15K-280	Washbasin Unit Angle	15K-290	Nut	Replacement of the Riveted Parts

Table 3519
Reference list for the replacement of permanent installed parts

WARNING: **BE SURE THAT THE LOAD IS RELEASED BEFORE YOU REMOVE THE COMPONENT.**

(a) Remove the lock pins 15K-180, the bolts 15K-160, the washers 15K-170 and the damper 15K-150 from the waste flap assembly 15K-020 and from the waste chute 18-010.

(b) Discard the lock pins 15K-180.

(c) Remove the ground cable from the washbasin assembly 15K-010.

(d) Remove the screws 15K-320, the washers 15K-220 and the washbasin assembly 15K-010 from the washbasin unit bracket 15K-250.

(e) Remove the screws 15K-210, the washers 15K-220, the nuts 15K-310 and the washbasin assembly 15K-010 from the angles 15K-280.

(f) Remove the screws 15K-190, the washers 15K-200 and the washbasin assembly 15K-010 from the lavatory structure.

(g) Disassemble the washbasin assembly 15K-010 as follows:

1 Remove the screws 15K-120, the washers 15K-130, the clip nuts 15K-140 and the waste flap assembly 15K-020.

2 Disassemble the waste flap assembly 15K-020 as follows:
- a Remove the screws 15K-040, the washers 15K-050 and the flap 15K-030 from the flap hinge half 15K-070.
- b Disassemble the hinge assembly 15K-060 as follows:

WARNING: **BE VERY CAREFUL WHEN YOU REMOVE OR INSTALL THE SPRING. BECAUSE THERE IS REMAINING TENSION IN THE SPRING, IT CAN CAUSE YOU INJURY.**

Remove the retaining rings 15K-110, the axle 15K-090 and the springs 15K-100 from the flap hinge half 15K-070 and from the washbasin hinge half 15K-080.

(h) Remove the screws 15K-300, the washers 15K-200 and the angles 15K-280 from the lavatory structure.

(i) Remove the screws 15K-270, the washers 15K-220, 15K-225 and the washbasin unit bracket 15K-250 from the lavatory structure.

SUB TASK 25-41-51-040-015-B01
D2549020813200

2. Removal and Disassembly of the Washbasin Unit (15K-1), (18-1)

NOTE: **See TABLE 3520 for the references for the replacement procedures of permanent installed parts.**

IPL FIG. ITEM	COMPONENT PART NAME	IPL FIG. ITEM	REPLACEMENT PART NAME	SEE REPAIR TASK
15K-001 15K-280	Washbasin Unit Angle	15K-290	Nut	Replacement of the Riveted Parts

Table 3520
Reference list for the replacement of permanent installed parts

(a) Remove the liquid soap dispenser 15K-230 from the washbasin assembly 15K-010.

NOTE: **For further instructions, see CMMV 25-40-01_120C2 (liquid soap dispenser).**

WARNING: **BE SURE THAT THE LOAD IS RELEASED BEFORE YOU REMOVE THE COMPONENT.**

(b) Remove the lock pins 15K-180, the bolts 15K-160, the washers 15K-170 and the damper 15K-150 from the waste flap assembly 15K-020 and from the waste chute 18-010.

(c) Discard the lock pins 15K-180.

(d) Remove the ground cable from the washbasin assembly 15K-010.

(e) Remove the screws 15K-320, the washers 15K-220 and the washbasin assembly 15K-010 from the washbasin unit bracket 15K-250.

(f) Remove the screws 15K-210, the washers 15K-220, the nuts 15K-310 and the washbasin assembly 15K-010 from the angles 15K-280.

(g) Remove the screws 15K-190, the washers 15K-200 and the washbasin assembly 15K-010 from the lavatory structure.

(h) Disassemble the washbasin assembly 15K-010 as follows:

1 Remove the screws 15K-120, the washers 15K-130, the clip nuts 15K-140 and the waste flap assembly 15K-020.

2 Disassemble the waste flap assembly 15K-020 as follows:
a Remove the screws 15K-040, the washers 15K-050 and the flap 15K-030 from the flap hinge half 15K-070.
b Disassemble the hinge assembly 15K-060 as follows:

WARNING: BE VERY CAREFUL WHEN YOU REMOVE OR INSTALL THE SPRING. BECAUSE THERE IS REMAINING TENSION IN THE SPRING, IT CAN CAUSE YOU INJURY.

Remove the retaining rings 15K-110, the axle 15K-090 and the springs 15K-100 from the flap hinge half 15K-070 and from the washbasin hinge half 15K-080.

(i) Remove the screws 15K-300, the washers 15K-200 and the angles 15K-280 from the lavatory structure.

(j) Remove the screws 15K-270, the washers 15K-220 and the washbasin unit bracket 15K-250 from the lavatory structure.

SUB TASK 25-41-51-040-015-C01
D2549010402000 D2549010402800 D2549010611400 D2549020403800 D2549020800400 D2549020802600

3. Removal and Disassembly of the Washbasin Unit (15K-1), (18-1)

NOTE: **See TABLE 3521 for the references for the replacement procedures of permanent installed parts.**

IPL FIG. ITEM	COMPONENT PART NAME	IPL FIG. ITEM	REPLACEMENT PART NAME	SEE REPAIR TASK
15K-001 15K-280	Washbasin Unit Angle	15K-290	Nut	Replacement of the Riveted Parts

Table 3521
Reference list for the replacement of permanent installed parts

(a) Remove the liquid soap dispenser bottle 15K-230 and liquid soap dispenser support 15K-240 from the washbasin assembly 15K-010.

(b) Remove the liquid soap dispenser bottle 15K-230 from the liquid soap dispenser support 15K-240.

WARNING: **BE SURE THAT THE LOAD IS RELEASED BEFORE YOU REMOVE THE COMPONENT.**

(c) Remove the lock pins 15K-180, the bolts 15K-160, the washers 15K-170 and the damper 15K-150 from the waste flap assembly 15K-020 and from the waste chute 18-010.

(d) Discard the lock pins 15K-180.

(e) Remove the ground cable from the washbasin assembly 15K-010.

(f) Remove the screws 15K-320, the washers 15K-220 and the washbasin assembly 15K-010 from the washbasin unit bracket 15K-250.

(g) Remove the screws 15K-210, the washers 15K-220, the nuts 15K-310 and the washbasin assembly 15K-010 from the angles 15K-280.

(h) Remove the screws 15K-190, the washers 15K-200 and the washbasin assembly 15K-010 from the lavatory structure.

(i) Disassemble the washbasin assembly 15K-010 as follows:

1 Remove the screws 15K-120, the washers 15K-130, the clip nuts 15K-140 and the waste flap assembly 15K-020.

2 Disassemble the waste flap assembly 15K-020 as follows:

a Remove the screws 15K-040, the washers 15K-050 and the flap 15K-030 from the flap hinge half 15K-070.

b Disassemble the hinge assembly 15K-060 as follows:

WARNING: BE VERY CAREFUL WHEN YOU REMOVE OR INSTALL THE SPRING. BECAUSE THERE IS REMAINING TENSION IN THE SPRING, IT CAN CAUSE YOU INJURY.

Remove the retaining rings 15K-110, the axle 15K-090 and the springs 15K-100 from the flap hinge half 15K-070 and from the washbasin hinge half 15K-080.

(j) Remove the screws 15K-300, the washers 15K-200 and the angles 15K-280 from the lavatory structure.

(k) Remove the screws 15K-270, the washers 15K-220 and the washbasin unit bracket 15K-250 from the lavatory structure.

TASK 25-41-51-000-812-M01

D2547161903000 D2549010401800 D2549010402200 D2549010403400 D2549010403600 D2549010403800 D2549010404200 D2549010405400 D2549020300000 D2549020302800 D2549020400800 D2549020401200 D2549020401400 D2549020402000 D2549020402600 D2549020403000 D2549020403200 D2549020403400 D2549020403600 D2549020404000 D2549020406000 D2549020406600 D2549020406800 D2549020407000 D2549020407400 D2549020407600 D2549020407800 D2549020408000 D2549020408200 D2549020408600 D2549020408800 D2549020409000 D2549020410200 D2549020410400 D2549020410800 D2549020411000 D2549020411400 D2549020411600 D2549020411800 D2549020412000 D2549020412200 D2549020413000 D2549020804400 D2549020807200 D2549020809600 D2549030409000 D2549030409200 D2549030409400 D2549030409600 D2549030410000 D2549030410200 D2549030410600 D2549030410800 D2549030411200 D2549030411400 D2549030411600 D2549030411800 D2549030412400 D2549030412600 D2549030412800 D2549030413000 D2549030413200 D2549030413600 D2549030414000 D2549030414200 D2549030414800 D2549030700000 D2549030700200 D2549030700400 D2549030700800 D2549030701000 D2549030701400 D2549030701600 D2549030702400 D2549040500400 D2549040500600 D2549040500800 D2549040501000 D2549040501200 D2549040501400 D2549040501600 D2549040501800 R225401134-014 R225401134-038 R225401136-006 R225401136-012 R225401136-024 R225401152-010 R225401196-018 R225401196-020 R225401196-022 R225401196-024 R225401196-042 R225401196-064 R225401196-066 R225401196-068 R225401196-070 R225401199-012 R225401602-000 R225401611-000 R225401611-014 R225401611-016 R225401611-018 R225401611-020 R225401627-000 R225401627-004 R225401643-006 R225401643-008 R225401646-002 R225401648-004 R225401648-006 R225401648-008 R225401671-000 R225401673-000 R225401673-002 R225401673-004 R225401673-006 R225401675-000 R225401676-000 R225401683-000 R225401688-000 R225401689-004 R225401691-000 R225401691-002 R225401697-000 R225401803-000

137. Removal and Disassembly of the Washbasin Unit

A. General

A complete disassembly of the component is not necessary and not recommended.

Do not disassemble the component more than it is necessary for:

- Cleaning
- Visual Inspection
- Replacement of defective parts.

B. Job Set-up Information

(1) Not applicable

C. Procedure

WARNING: **BE CAREFUL WHEN YOU USE SOLVENTS/CLEANING AGENTS, SEALANTS AND OTHER MATERIALS. OBEY THE MATERIAL MANUFACTURER'S INSTRUCTIONS AND THE LOCAL REGULATIONS. MAKE SURE THAT THERE IS A GOOD FLOW OF AIR THROUGH THE WORK AREA. DO NOT BREATHE THE FUMES. DO NOT SMOKE. DO NOT USE THESE MATERIALS NEAR A FLAME, SPARKS OR SOURCES OF HEAT. USE PROTECTIVE CLOTHING, GOGGLES AND GLOVES. IF YOU GET ONE OF THESE MATERIALS ON YOUR SKIN OR IN YOUR EYES, FLUSH IT AWAY WITH A FLOW OF CLEAN WATER. IF YOU GET ONE OF THESE MATERIALS IN YOUR MOUTH, GET IMMEDIATE MEDICAL AID. IN GENERAL, THESE MATERIALS ARE POISONOUS, FLAMMABLE AND SKIN IRRITANTS.**

CAUTION: **DO ALL THE WORK ON A CLEAN, SOFT SURFACE TO PREVENT DAMAGE TO THE COMPONENTS.**

SUB TASK 25-41-51-040-016-A01

D2549020300000 D2549020302800 D2549020402600 D2549020403000 D2549020407000 D2549020407800 D2549020409000 D2549020807200 D2549030409000 D2549030410200 D2549030413200 D2549030413600 D2549030700400 D2549030701400 D2549040500400 D2549040501200 D2549040501600 R225401134-014 R225401134-038 R225401152-010 R225401196-018 R225401196-020 R225401196-022 R225401196-024 R225401196-042 R225401196-064 R225401196-066 R225401196-068 R225401196-070 R225401199-012 R225401611-000 R225401611-016 R225401611-018 R225401611-020 R225401675-000

1. Removal and Disassembly of the Washbasin Unit (15L-1), (18-1)

NOTE: **See TABLE 3522 for the references for the replacement procedures of permanent installed parts.**

IPL FIG. ITEM	COMPONENT PART NAME	IPL FIG. ITEM	REPLACEMENT PART NAME	SEE REPAIR TASK
15L-001 15L-270	Washbasin Unit Angle	15L-280	Nut	Replacement of the Riveted Parts

Table 3522
Reference list for the replacement of permanent installed parts

WARNING: **BE SURE THAT THE LOAD IS RELEASED BEFORE YOU REMOVE THE COMPONENT.**

(a) Remove the cotter pins 15L-180, the bolts 15L-160, the washers 15L-170 and the damper 15L-150 from the waste flap assembly 15L-020 and from the waste chute 18-010.

(b) Discard the cotter pins 15L-180.

(c) Remove the ground cable from the washbasin assembly 15L-010.

(d) Remove the screws 15L-310, the washers 15L-220 and the washbasin assembly 15L-010 from the washbasin unit bracket 15L-240.

(e) Remove the screws 15L-210, the washers 15L-220, the nuts 15L-300 and the washbasin assembly 15L-010 from the angles 15L-270.

(f) Remove the screws 15L-190, 15L-192, the washers 15L-200 and the washbasin assembly 15L-010 from the lavatory structure.

(g) Disassemble the washbasin assembly 15L-010 as follows:

1 Remove the screws 15L-120, the washers 15L-130, the clip nuts 15L-140 and the waste flap assembly 15L-020.

2 Disassemble the waste flap assembly 15L-020 as follows:

a Remove the screws 15L-040, the washers 15L-050 and the flap 15L-030 from the flap hinge half 15L-070.

b Disassemble the hinge assembly 15L-060 as follows:

WARNING: **BE VERY CAREFUL WHEN YOU REMOVE OR INSTALL THE SPRING. BECAUSE THERE IS REMAINING TENSION IN THE SPRING, IT CAN CAUSE YOU INJURY.**

Remove the retaining rings 15L-110, the axle 15L-090 and the springs 15L-100 from the flap hinge half 15L-070 and from the washbasin hinge half 15L-080.

(h) Remove the screws 15L-290, the washers 15L-200 and the angles 15L-270 from the lavatory structure.

(i) Remove the screws 15L-260, the washers 15L-200 and the washbasin unit bracket 15L-240 from the lavatory structure.

SUB TASK 25-41-51-040-016-B01

D2549010401800 D2549010402200 D2549010403400 D2549010403600 D2549010403800 D2549010404200 D2549010405400 D2549020400800 D2549020401400 D2549020402000 D2549020403200 D2549020403600 D2549020404000 D2549020406000 D2549020406600 D2549020407400 D2549020408000 D2549020408200 D2549020408600 D2549020408800 D2549020410200 D2549020410400 D2549020410800 D2549020411000 D2549020411400 D2549020411600 D2549020411800 D2549020412000 D2549020412200 D2549020413000 D2549020804400 D2549020809600 D2549030409400 D2549030409600 D2549030410000 D2549030410600 D2549030410800 D2549030411200 D2549030411400 D2549030411600 D2549030412400 D2549030412600 D2549030412800 D2549030414000 D2549030414200 D2549030414800 D2549030700000 D2549030700800 D2549030701000 D2549030701600 D2549040501800 R225401602-000 R225401611-014 R225401627-000 R225401627-004 R225401643-006 R225401643-008 R225401648-004 R225401648-006 R225401648-008 R225401671-000 R225401676-000 R225401688-000 R225401689-004 R225401697-000 R225401803-000

2. Removal and Disassembly of the Washbasin Unit (15L-1), (18-1)

NOTE: **See TABLE 3523 for the references for the replacement procedures of permanent installed parts.**

IPL FIG. ITEM	COMPONENT PART NAME	IPL FIG. ITEM	REPLACEMENT PART NAME	SEE REPAIR TASK
15L-001 15L-270	Washbasin Unit Angle	15L-280	Nut	Replacement of the Riveted Parts

Table 3523
Reference list for the replacement of permanent installed parts

(a) Remove the washer 15L-335, the liquid soap dispenser support 15L-330 and the liquid soap dispenser bottle 15L-320 from the washbasin assembly 15L-010.

(b) Remove the liquid soap dispenser TBD from the washbasin assembly 15L-010.

NOTE: **For further instructions, see CMMV 25-40-01_120C2 (liquid soap dispenser).**

WARNING: **BE SURE THAT THE LOAD IS RELEASED BEFORE YOU REMOVE THE COMPONENT.**

(c) Remove the cotter pins 15L-180, the bolts 15L-160, the washers 15L-170 and the damper 15L-150 from the waste flap assembly 15L-020 and from the waste chute 18-010.

(d) Discard the cotter pins 15L-180.

(e) Remove the ground cable from the washbasin assembly 15L-010.

(f) Remove the screws 15L-310, the washers 15L-220 and the washbasin assembly 15L-010 from the washbasin unit bracket 15L-240.

(g) Remove the screws 15L-210, the washers 15L-220, the nuts 15L-300 and the washbasin assembly 15L-010 from the angles 15L-270.

(h) Remove the screws 15L-190, the washers 15L-200 and the washbasin assembly 15L-010 from the lavatory structure.

(i) Disassemble the washbasin assembly 15L-010 as follows:

1 Remove the screws 15L-120, the washers 15L-130, the clip nuts 15L-140 and the waste flap assembly 15L-020.

2 Disassemble the waste flap assembly 15L-020 as follows:

a Remove the screws 15L-040, the washers 15L-050 and the flap 15L-030 from the flap hinge half 15L-070.

b Disassemble the hinge assembly 15L-060 as follows:

WARNING: **BE VERY CAREFUL WHEN YOU REMOVE OR INSTALL THE SPRING. BECAUSE THERE IS REMAINING TENSION IN THE SPRING, IT CAN CAUSE YOU INJURY.**

Remove the retaining rings 15L-110, the axle 15L-090 and the springs 15L-100 from the flap hinge half 15L-070 and from the washbasin hinge half 15L-080.

(j) Remove the screws 15L-290, the washers 15L-200 and the angles 15L-270 from the lavatory structure.

(k) Remove the screws 15L-260, the washers 15L-200 and the washbasin unit bracket 15L-240 from the lavatory structure.

SUB TASK 25-41-51-040-016-C01
D2549020401200 D2549020406800 D2549030413000 D2549030700200 D2549030702400 D2549040500600 D2549040500800 D2549040501000 D2549040501400 R225401646-002 R225401673-000 R225401673-002 R225401673-004 R225401673-006 R225401691-000 R225401691-002

3. Removal and Disassembly of the Washbasin Unit (15L-1), (18-1)

NOTE: **See TABLE 3524 for the references for the replacement procedures of permanent installed parts.**

IPL FIG. ITEM	COMPONENT PART NAME	IPL FIG. ITEM	REPLACEMENT PART NAME	SEE REPAIR TASK
15L-001 15L-270	Washbasin Unit Angle	15L-280	Nut	Replacement of the Riveted Parts

Table 3524
Reference list for the replacement of permanent installed parts

(a) Remove the liquid soap dispenser bottle 15L-320 and the liquid soap dispenser support 15L-330 from the washbasin assembly 15L-010.

(b) Remove the liquid soap dispenser bottle 15L-320 from the liquid soap dispenser support 15L-330.

WARNING: **BE SURE THAT THE LOAD IS RELEASED BEFORE YOU REMOVE THE COMPONENT.**

(c) Remove the cotter pins 15L-180, the bolts 15L-160, the washers 15L-170 and the damper 15L-150 from the waste flap assembly 15L-020 and from the waste chute 18-010.

(d) Discard the cotter pins 15L-180.

(e) Remove the ground cable from the washbasin assembly 15L-010.

(f) Remove the screws 15L-310, the washers 15L-220 and the washbasin assembly 15L-010 from the washbasin unit bracket 15L-240.

(g) Remove the screws 15L-210, the washers 15L-220, the nuts 15L-300 and the washbasin assembly 15L-010 from the angles 15L-270.

(h) Remove the screws 15L-190, the washers 15L-200 and the washbasin assembly 15L-010 from the lavatory structure.

(i) Disassemble the washbasin assembly 15L-010 as follows:

1 Remove the screws 15L-120, the washers 15L-130, the clip nuts 15L-140 and the waste flap assembly 15L-020.

2 Disassemble the waste flap assembly 15L-020 as follows:
a Remove the screws 15L-040, the washers 15L-050 and the flap 15L-030 from the flap hinge half 15L-070.
b Disassemble the hinge assembly 15L-060 as follows:

WARNING: BE VERY CAREFUL WHEN YOU REMOVE OR INSTALL THE SPRING. BECAUSE THERE IS REMAINING TENSION IN THE SPRING, IT CAN CAUSE YOU INJURY.

Remove the retaining rings 15L-110, the axle 15L-090 and the springs 15L-100 from the flap hinge half 15L-070 and from the washbasin hinge half 15L-080.

(j) Remove the screws 15L-290, the washers 15L-200 and the angles 15L-270 from the lavatory structure.

(k) Remove the screws 15L-260, the washers 15L-200 and the washbasin unit bracket 15L-240 from the lavatory structure.

SUB TASK 25-41-51-040-016-D01
D2549020407600 R225401683-000

4. Removal and Disassembly of the Washbasin Unit (15L-1), (18-1)

NOTE: **See TABLE 3525 for the references for the replacement procedures of permanent installed parts.**

IPL FIG. ITEM	COMPONENT PART NAME	IPL FIG. ITEM	REPLACEMENT PART NAME	SEE REPAIR TASK
15L-001 15L-270	Washbasin Unit Angle	15L-280	Nut	Replacement of the Riveted Parts

Table 3525
Reference list for the replacement of permanent installed parts

(a) Remove the perfume dispenser bottle 15L-320 and the liquid soap dispenser supports 15L-330, 15L-331 from the washbasin assembly 15L-010.

(b) Remove the perfume dispenser bottle 15L-320 from the liquid soap dispenser support 15L-330.

WARNING: **BE SURE THAT THE LOAD IS RELEASED BEFORE YOU REMOVE THE COMPONENT.**

(c) Remove the cotter pins 15L-180, the bolts 15L-160, the washers 15L-170 and the damper 15L-150 from the waste flap assembly 15L-020 and from the waste chute 18-010.

(d) Discard the cotter pins 15L-180.

(e) Remove the ground cable from the washbasin assembly 15L-010.

(f) Remove the screws 15L-310, the washers 15L-220 and the washbasin assembly 15L-010 from the washbasin unit bracket 15L-240.

(g) Remove the screws 15L-210, the washers 15L-220, the nuts 15L-300 and the washbasin assembly 15L-010 from the angles 15L-270.

(h) Remove the screws 15L-190, the washers 15L-200 and the washbasin assembly 15L-010 from the lavatory structure.

(i) Disassemble the washbasin assembly 15L-010 as follows:

1 Remove the screws 15L-120, the washers 15L-130, the clip nuts 15L-140 and the waste flap assembly 15L-020.

2 Disassemble the waste flap assembly 15L-020 as follows:

a Remove the screws 15L-040, the washers 15L-050 and the flap 15L-030 from the flap hinge half 15L-070.

b Disassemble the hinge assembly 15L-060 as follows:

WARNING: BE VERY CAREFUL WHEN YOU REMOVE OR INSTALL THE SPRING. BECAUSE THERE IS REMAINING TENSION IN THE SPRING, IT CAN CAUSE YOU INJURY.

Remove the retaining rings 15L-110, the axle 15L-090 and the springs 15L-100 from the flap hinge half 15L-070 and from the washbasin hinge half 15L-080.

(j) Remove the screws 15L-290, the washers 15L-200 and the angles 15L-270 from the lavatory structure.

(k) Remove the screws 15L-260, the washers 15L-200 and the washbasin unit bracket 15L-240 from the lavatory structure.

SUB TASK 25-41-51-040-016-E01
D2549020403400 D2549030409200 R225401136-006 R225401136-012 R225401136-024

5. Removal and Disassembly of the Washbasin Unit (15L-1), (18-1)

NOTE: See TABLE 3526 for the references for the replacement procedures of permanent installed parts.

IPL FIG. ITEM	COMPONENT PART NAME	IPL FIG. ITEM	REPLACEMENT PART NAME	SEE REPAIR TASK
15L-001 15L-270	Washbasin Unit Angle	15L-280	Nut	Replacement of the Riveted Parts

Table 3526
Reference list for the replacement of permanent installed parts

(a) Remove the liquid soap dispenser TBD from the washbasin assembly 15L-010.

NOTE: For further instructions, see CMMV 25-40-01_120C2 (liquid soap dispenser).

(b) Remove the hand lotion dispenser 15L-320 and the liquid soap dispenser support 15L-330 from the washbasin assembly 15L-010.

(c) Remove the hand lotion dispenser 15L-320 from the liquid soap dispenser support 15L-330.

WARNING: BE SURE THAT THE LOAD IS RELEASED BEFORE YOU REMOVE THE COMPONENT.

(d) Remove the cotter pins 15L-180, the bolts 15L-160, the washers 15L-170 and the damper 15L-150 from the waste flap assembly 15L-020 and from the waste chute 18-010.

(e) Discard the cotter pins 15L-180.

(f) Remove the ground cable from the washbasin assembly 15L-010.

(g) Remove the screws 15L-310, the washers 15L-220 and the washbasin assembly 15L-010 from the washbasin unit bracket 15L-240.

(h) Remove the screws 15L-210, the washers 15L-220, the nuts 15L-300 and the washbasin assembly 15L-010 from the angles 15L-270.

(i) Remove the screws 15L-190, the washers 15L-200 and the washbasin assembly 15L-010 from the lavatory structure.

(j) Disassemble the washbasin assembly 15L-010 as follows:

1 Remove the screws 15L-120, the washers 15L-130, the clip nuts 15L-140 and the waste flap assembly 15L-020.

2 Disassemble the waste flap assembly 15L-020 as follows:
a Remove the screws 15L-040, the washers 15L-050 and the flap 15L-030 from the flap hinge half 15L-070.
b Disassemble the hinge assembly 15L-060 as follows:

WARNING: BE VERY CAREFUL WHEN YOU REMOVE OR INSTALL THE SPRING. BECAUSE THERE IS REMAINING TENSION IN THE SPRING, IT CAN CAUSE YOU INJURY.

Remove the retaining rings 15L-110, the axle 15L-090 and the springs 15L-100 from the flap hinge half 15L-070 and from the washbasin hinge half 15L-080.

(k) Remove the screws 15L-290, the washers 15L-200 and the angles 15L-270 from the lavatory structure.

(l) Remove the screws 15L-260, the washers 15L-200 and the washbasin unit bracket 15L-240 from the lavatory structure.

SUB TASK 25-41-51-040-016-F01
D2549030411800

6. Removal and Disassembly of the Washbasin Unit (15L-1), (18-1)

NOTE: **See TABLE 3527 for the references for the replacement procedures of permanent installed parts.**

IPL FIG. ITEM	COMPONENT PART NAME	IPL FIG. ITEM	REPLACEMENT PART NAME	SEE REPAIR TASK
15L-001 15L-270	Washbasin Unit Angle	15L-280	Nut	Replacement of the Riveted Parts

Table 3527
Reference list for the replacement of permanent installed parts

(a) Remove the liquid soap dispenser TBD from the washbasin assembly 15L-010.

NOTE: **For further instructions, see CMMV 25-40-01_DL161 (liquid soap dispenser).**

WARNING: **BE SURE THAT THE LOAD IS RELEASED BEFORE YOU REMOVE THE COMPONENT.**

(b) Remove the cotter pins 15L-180, the bolts 15L-160, the washers 15L-170 and the damper 15L-150 from the waste flap assembly 15L-020 and from the waste chute 18-010.

(c) Discard the cotter pins 15L-180.

(d) Remove the ground cable from the washbasin assembly 15L-010.

(e) Remove the screws 15L-310, the washers 15L-220 and the washbasin assembly 15L-010 from the washbasin unit bracket 15L-240.

(f) Remove the screws 15L-210, the washers 15L-220, the nuts 15L-300 and the washbasin assembly 15L-010 from the angles 15L-270.

(g) Remove the screws 15L-190, the washers 15L-200 and the washbasin assembly 15L-010 from the lavatory structure.

(h) Disassemble the washbasin assembly 15L-010 as follows:

1 Remove the screws 15L-120, the washers 15L-130, the clip nuts 15L-140 and the waste flap assembly 15L-020.

2 Disassemble the waste flap assembly 15L-020 as follows:
a Remove the screws 15L-040, the washers 15L-050 and the flap 15L-030 from the flap hinge half 15L-070.
b Disassemble the hinge assembly 15L-060 as follows:

WARNING: BE VERY CAREFUL WHEN YOU REMOVE OR INSTALL THE SPRING. BECAUSE THERE IS REMAINING TENSION IN THE SPRING, IT CAN CAUSE YOU INJURY.

Remove the retaining rings 15L-110, the axle 15L-090 and the springs 15L-100 from the flap hinge half 15L-070 and from the washbasin hinge half 15L-080.

(i) Remove the screws 15L-290, the washers 15L-200 and the angles 15L-270 from the lavatory structure.

(j) Remove the screws 15L-260, the washers 15L-200 and the washbasin unit bracket 15L-240 from the lavatory structure.

SUB TASK 25-41-51-040-016-G01
D2547161903000

7. Removal and Disassembly of the Washbasin Unit (15L-1), (18-1)

NOTE: See TABLE 3528 for the references for the replacement procedures of permanent installed parts.

IPL FIG. ITEM	COMPONENT PART NAME	IPL FIG. ITEM	REPLACEMENT PART NAME	SEE REPAIR TASK
15L-001 15L-270	Washbasin Unit Angle	15L-280	Nut	Replacement of the Riveted Parts

Table 3528
Reference list for the replacement of permanent installed parts

(a) Remove the liquid soap dispenser bottle 15L-320 and the foam soap dispenser 15L-330 from the washbasin assembly 15L-010.

(b) Remove the liquid soap dispenser bottle 15L-320 from the foam soap dispenser 15L-330.

(c) Remove the screws 15L-350, 15L-360, the washers 15L-225 and the cosmetics holder 15L-340 from the washbasin assembly 15L-010.

WARNING: BE SURE THAT THE LOAD IS RELEASED BEFORE YOU REMOVE THE COMPONENT.

(d) Remove the cotter pins 15L-180, the bolts 15L-160, the washers 15L-170 and the damper 15L-150 from the waste flap assembly 15L-020 and from the waste chute 18-010.

(e) Discard the cotter pins 15L-180.

(f) Remove the ground cable from the washbasin assembly 15L-010.

(g) Remove the screws 15L-310, the washers 15L-220 and the washbasin assembly 15L-010 from the washbasin unit bracket 15L-240.

(h) Remove the screws 15L-210, the washers 15L-220, the nuts 15L-300 and the washbasin assembly 15L-010 from the angles 15L-270.

(i) Remove the screws 15L-190, 15L-195, the washers 15L-200, 15L-205 and the washbasin assembly 15L-010 from the lavatory structure.

(j) Disassemble the washbasin assembly 15L-010 as follows:

1 Remove the screws 15L-120, the washers 15L-130, the clip nuts 15L-140 and the waste flap assembly 15L-020.

2 Disassemble the waste flap assembly 15L-020 as follows:

a Remove the screws 15L-040, the washers 15L-050 and the flap 15L-030 from the flap hinge half 15L-070.

b Disassemble the hinge assembly 15L-060 as follows:

WARNING: BE VERY CAREFUL WHEN YOU REMOVE OR INSTALL THE SPRING. BECAUSE THERE IS REMAINING TENSION IN THE SPRING, IT CAN CAUSE YOU INJURY.

Remove the retaining rings 15L-110, the axle 15L-090 and the springs 15L-100 from the flap hinge half 15L-070 and from the washbasin hinge half 15L-080.

(k) Remove the screws 15L-290, the washers 15L-200 and the angles 15L-270 from the lavatory structure.

(l) Remove the screws 15L-260, the washers 15L-200 and the washbasin unit bracket 15L-240 from the lavatory structure.

TASK 25-41-51-000-812-N01
D2549010401600 D2549010402400 D2549010403200 D2549010404600 D2549010405000 D2549010405200 D2549010405800 D2549020401600 D2549020402400 D2549020409200 D2549020411200 D2549030414600 D2549030700600 R225401624-000 R225401685-000 R225401685-002

138. Removal and Disassembly of the Washbasin Unit

A. General

A complete disassembly of the component is not necessary and not recommended.

Do not disassemble the component more than it is necessary for:

- Cleaning
- Visual Inspection
- Replacement of defective parts.

B. Job Set-up Information

(1) Not applicable

C. Procedure

WARNING: BE CAREFUL WHEN YOU USE SOLVENTS/CLEANING AGENTS, SEALANTS AND OTHER MATERIALS. OBEY THE MATERIAL MANUFACTURER'S INSTRUCTIONS AND THE LOCAL REGULATIONS. MAKE SURE THAT THERE IS A GOOD FLOW OF AIR THROUGH THE WORK AREA. DO NOT BREATHE THE FUMES. DO NOT SMOKE. DO NOT USE THESE MATERIALS NEAR A FLAME, SPARKS OR SOURCES OF HEAT. USE PROTECTIVE CLOTHING, GOGGLES AND GLOVES. IF YOU GET ONE OF THESE MATERIALS ON YOUR SKIN OR IN YOUR EYES, FLUSH IT AWAY WITH A FLOW OF CLEAN WATER. IF YOU GET ONE OF THESE MATERIALS IN YOUR MOUTH, GET IMMEDIATE MEDICAL AID. IN GENERAL, THESE MATERIALS ARE POISONOUS, FLAMMABLE AND SKIN IRRITANTS.

CAUTION: DO ALL THE WORK ON A CLEAN, SOFT SURFACE TO PREVENT DAMAGE TO THE COMPONENTS.

SUB TASK 25-41-51-040-017-A01
D2549010402400 D2549010403200 D2549010404600 D2549010405000 D2549010405200 D2549010405800 D2549020401600 D2549020402400

D2549020409200 D2549030414600 D2549030700600 R225401624-000 R225401685-000 R225401685-002

1. Removal and Disassembly of the Washbasin Unit (15M-1), (18-1)

NOTE: **See TABLE 3529 for the references for the replacement procedures of permanent installed parts.**

IPL FIG. ITEM	COMPONENT PART NAME	IPL FIG. ITEM	REPLACEMENT PART NAME	SEE REPAIR TASK
15M-001 15M-270	Washbasin Unit Angle	15M-280	Nut	Replacement of the Riveted Parts

Table 3529
Reference list for the replacement of permanent installed parts

(a) Remove the liquid soap dispenser 15M-230 from the washbasin assembly 15M-010.

NOTE: **For further instructions, see CMMV 25-40-01_120C2 (liquid soap dispenser).**

WARNING: **BE SURE THAT THE LOAD IS RELEASED BEFORE YOU REMOVE THE COMPONENT.**

(b) Remove the cotter pins 15M-180, the bolts 15M-160, the washers 15M-170 and the damper 15M-150 from the waste flap assembly 15M-020 and from the waste chute 18-010.

(c) Discard the cotter pins 15M-180.

(d) Remove the ground cable from the washbasin assembly 15M-010.

(e) Remove the screws 15M-310, the washers 15M-220 and the washbasin assembly 15M-010 from the washbasin unit bracket 15M-240.

(f) Remove the screws 15M-210, the washers 15M-220, the nuts 15M-300 and the washbasin assembly 15M-010 from the angles 15M-270.

(g) Remove the screws 15M-190, the washers 15M-200 and the washbasin assembly 15M-010 from the lavatory structure.

(h) Disassemble the washbasin assembly 15M-010 as follows:

1 Remove the screws 15M-120, the washers 15M-130, the clip nuts 15M-140 and the waste flap assembly 15M-020.

2 Disassemble the waste flap assembly 15M-020 as follows:
a Remove the screws 15M-040, the washers 15M-050 and the flap 15M-030 from the flap hinge half 15M-070.
b Disassemble the hinge assembly 15M-060 as follows:

WARNING: BE VERY CAREFUL WHEN YOU REMOVE OR INSTALL THE SPRING. BECAUSE THERE IS REMAINING TENSION IN THE SPRING, IT CAN CAUSE YOU INJURY.

Remove the retaining rings 15M-110, the axle 15M-090 and the springs 15M-100 from the flap hinge half 15M-070 and from the washbasin hinge half 15M-080.

(i) Remove the screws 15M-290, the washers 15M-200 and the angles 15M-270 from the lavatory structure.

(j) Remove the screws 15M-260, the washers 15M-200 and the washbasin unit bracket 15M-240 from the lavatory structure.

SUB TASK 25-41-51-040-017-B01
D2549020411200

2. Removal and Disassembly of the Washbasin Unit (15M-1), (18-1)

NOTE: See TABLE 3530 for the references for the replacement procedures of permanent installed parts.

IPL FIG. ITEM	COMPONENT PART NAME	IPL FIG. ITEM	REPLACEMENT PART NAME	SEE REPAIR TASK
15M-001 15M-270	Washbasin Unit Angle	15M-280	Nut	Replacement of the Riveted Parts

Table 3530
Reference list for the replacement of permanent installed parts

(a) Remove the screws 15M-330, the soap dispenser bracket 15M-320 and the spacer 15M-340 from the washbasin assembly 15M-010.

WARNING: **BE SURE THAT THE LOAD IS RELEASED BEFORE YOU REMOVE THE COMPONENT.**

(b) Remove the cotter pins 15M-180, the bolts 15M-160, the washers 15M-170 and the damper 15M-150 from the waste flap assembly 15M-020 and from the waste chute 18-010.

(c) Discard the cotter pins 15M-180.

(d) Remove the ground cable from the washbasin assembly 15M-010.

(e) Remove the screws 15M-310, the washers 15M-220 and the washbasin assembly 15M-010 from the washbasin unit bracket 15M-240.

(f) Remove the screws 15M-210, the washers 15M-220, the nuts 15M-300 and the washbasin assembly 15M-010 from the angles 15M-270.

(g) Remove the screws 15M-190, 15M-191, the washers 15M-200, 15M-201 and the washbasin assembly 15M-010 from the lavatory structure.

(h) Disassemble the washbasin assembly 15M-010 as follows:

1 Remove the screws 15M-120, the washers 15M-130, the clip nuts 15M-140 and the waste flap assembly 15M-020.

2 Disassemble the waste flap assembly 15M-020 as follows:

a Remove the screws 15M-040, the washers 15M-050 and the flap 15M-030 from the flap hinge half 15M-070.

b Disassemble the hinge assembly 15M-060 as follows:

WARNING: **BE VERY CAREFUL WHEN YOU REMOVE OR INSTALL THE SPRING. BECAUSE THERE IS REMAINING TENSION IN THE SPRING, IT CAN CAUSE YOU INJURY.**

Remove the retaining rings 15M-110, the axle 15M-090 and the springs 15M-100 from the flap hinge half 15M-070 and from the washbasin hinge half 15M-080.

(i) Remove the screws 15M-290, the washers 15M-200 and the angles 15M-270 from the lavatory structure.

(j) Remove the screws 15M-260, the washers 15M-200 and the washbasin unit bracket 15M-240 from the lavatory structure.

SUB TASK 25-41-51-040-017-C01
D2549010401600

3. Removal and Disassembly of the Washbasin Unit (15M-1), (18-1)

NOTE: **See TABLE 3531 for the references for the replacement procedures of permanent installed parts.**

IPL FIG. ITEM	COMPONENT PART NAME	IPL FIG. ITEM	REPLACEMENT PART NAME	SEE REPAIR TASK
15M-001 15M-270	Washbasin Unit Angle	15M-280	Nut	Replacement of the Riveted Parts

Table 3531
Reference list for the replacement of permanent installed parts

(a) Remove the liquid soap dispenser bottle 15M-230 from the washbasin assembly 15M-010.

WARNING: **BE SURE THAT THE LOAD IS RELEASED BEFORE YOU REMOVE THE COMPONENT.**

(b) Remove the cotter pins 15M-180, the bolts 15M-160, the washers 15M-170 and the damper 15M-150 from the waste flap assembly 15M-020 and from the waste chute 18-010.

(c) Discard the cotter pins 15M-180.

(d) Remove the ground cable from the washbasin assembly 15M-010.

(e) Remove the screws 15M-310, the washers 15M-220 and the washbasin assembly 15M-010 from the washbasin unit bracket 15M-240.

(f) Remove the screws 15M-210, the washers 15M-220, the nuts 15M-300 and the washbasin assembly 15M-010 from the angles 15M-270.

(g) Remove the screws 15M-190, the washers 15M-200 and the washbasin assembly 15M-010 from the lavatory structure.

(h) Disassemble the washbasin assembly 15M-010 as follows:

1 Remove the screws 15M-120, the washers 15M-130, the clip nuts 15M-140 and the waste flap assembly 15M-020.

2 Disassemble the waste flap assembly 15M-020 as follows:
- a Remove the screws 15M-040, the washers 15M-050 and the flap 15M-030 from the flap hinge half 15M-070.
- b Disassemble the hinge assembly 15M-060 as follows:

WARNING: BE VERY CAREFUL WHEN YOU REMOVE OR INSTALL THE SPRING. BECAUSE THERE IS REMAINING TENSION IN THE SPRING, IT CAN CAUSE YOU INJURY.

Remove the retaining rings 15M-110, the axle 15M-090 and the springs 15M-100 from the flap hinge half 15M-070 and from the washbasin hinge half 15M-080.

(i) Remove the screws 15M-290, the washers 15M-200 and the angles 15M-270 from the lavatory structure.

(j) Remove the screws 15M-260, the washers 15M-200 and the washbasin unit bracket 15M-240 from the lavatory structure.

TASK 25-41-51-000-812-P01
D2547160900200 D2547160900400 D2549010401400 D2549010404400 D2549020409600 D2549030414400

139. Removal and Disassembly of the Washbasin Unit

A. General

A complete disassembly of the component is not necessary and not recommended.

Do not disassemble the component more than it is necessary for:

- Cleaning
- Visual Inspection
- Replacement of defective parts.

B. Job Set-up Information

(1) Not applicable

C. Procedure

WARNING: BE CAREFUL WHEN YOU USE SOLVENTS/CLEANING AGENTS, SEALANTS AND OTHER MATERIALS. OBEY THE MATERIAL MANUFACTURER'S INSTRUCTIONS AND THE LOCAL REGULATIONS. MAKE SURE THAT THERE IS A GOOD FLOW OF AIR THROUGH THE WORK AREA. DO NOT BREATHE THE FUMES. DO NOT SMOKE. DO NOT USE THESE MATERIALS NEAR A FLAME, SPARKS OR SOURCES OF HEAT. USE PROTECTIVE CLOTHING, GOGGLES AND GLOVES. IF YOU GET ONE OF THESE MATERIALS ON YOUR SKIN OR IN YOUR EYES, FLUSH IT AWAY WITH A FLOW OF CLEAN WATER. IF YOU GET ONE OF THESE MATERIALS IN YOUR MOUTH, GET IMMEDIATE MEDICAL AID. IN GENERAL, THESE MATERIALS ARE POISONOUS, FLAMMABLE AND SKIN IRRITANTS.

CAUTION: DO ALL THE WORK ON A CLEAN, SOFT SURFACE TO PREVENT DAMAGE TO THE COMPONENTS.

SUB TASK 25-41-51-040-018-A01
1. Removal and Disassembly of the Washbasin Unit (15N-1), (18-1)

NOTE: **See TABLE 3532 for the references for the replacement procedures of permanent installed parts.**

IPL FIG. ITEM	COMPONENT PART NAME	IPL FIG. ITEM	REPLACEMENT PART NAME	SEE REPAIR TASK
15N-001 15N-270	Washbasin Unit Angle	15N-280	Nut	Replacement of the Riveted Parts

Table 3532
Reference list for the replacement of permanent installed parts

(a) Remove the liquid soap dispenser assembly 15N-230 from the washbasin assembly 15N-010.

NOTE: **For further instructions, see CMMV 25-40-03_120C2 (liquid soap dispenser assembly).**

WARNING: **BE SURE THAT THE LOAD IS RELEASED BEFORE YOU REMOVE THE COMPONENT.**

(b) Remove the lock pins 15N-180, the bolts 15N-160, the washers 15N-170 and the damper 15N-150 from the waste flap assembly 15N-020 and from the waste chute 18-010.

(c) Discard the lock pins 15N-180.

(d) Remove the ground cable from the washbasin assembly 15N-010.

(e) Remove the screws 15N-310, the washers 15N-220 and the washbasin assembly 15N-010 from the washbasin unit bracket 15N-240.

(f) Remove the screws 15N-210, the washers 15N-220, the nuts 15N-300 and the washbasin assembly 15N-010 from the angles 15N-270.

(g) Remove the screws 15N-190, the washers 15N-200 and the washbasin assembly 15N-010 from the lavatory structure.

(h) Disassemble the washbasin assembly 15N-010 as follows:

1 Remove the screws 15N-120, the washers 15N-130, the clip nuts 15N-140 and the waste flap assembly 15N-020.

2 Disassemble the waste flap assembly 15N-020 as follows:

a Remove the screws 15N-040, the washers 15N-050 and the flap 15N-030 from the flap hinge half 15N-070.

b Disassemble the hinge assembly 15N-060 as follows:

WARNING: BE VERY CAREFUL WHEN YOU REMOVE OR INSTALL THE SPRING. BECAUSE THERE IS REMAINING TENSION IN THE SPRING, IT CAN CAUSE YOU INJURY.

Remove the retaining rings 15N-110, the axle 15N-090 and the springs 15N-100 from the flap hinge half 15N-070 and from the washbasin hinge half 15N-080.

(i) Remove the screws 15N-290, the washers 15N-200 and the angles 15N-270 from the lavatory structure.

(j) Remove the screws 15N-260, the washers 15N-200 and the washbasin unit bracket 15N-240 from the lavatory structure.

TASK 25-41-51-000-812-Q01
D2549020409400

140. Removal and Disassembly of the Washbasin Unit

A. General

A complete disassembly of the component is not necessary and not recommended.

Do not disassemble the component more than it is necessary for:

- Cleaning
- Visual Inspection
- Replacement of defective parts.

B. Job Set-up Information

(1) Not applicable

C. Procedure

WARNING: BE CAREFUL WHEN YOU USE SOLVENTS/CLEANING AGENTS, SEALANTS AND OTHER MATERIALS. OBEY THE MATERIAL MANUFACTURER'S INSTRUCTIONS AND THE LOCAL REGULATIONS. MAKE SURE THAT THERE IS A GOOD FLOW OF AIR THROUGH THE WORK AREA. DO NOT BREATHE THE FUMES. DO NOT SMOKE. DO NOT USE THESE MATERIALS NEAR A FLAME, SPARKS OR SOURCES OF HEAT. USE PROTECTIVE CLOTHING, GOGGLES AND GLOVES. IF YOU GET ONE OF THESE MATERIALS ON YOUR SKIN OR IN YOUR EYES, FLUSH IT AWAY WITH A FLOW OF CLEAN WATER. IF YOU GET ONE OF THESE MATERIALS IN YOUR MOUTH, GET IMMEDIATE MEDICAL AID. IN GENERAL, THESE MATERIALS ARE POISONOUS, FLAMMABLE AND SKIN IRRITANTS.

CAUTION: DO ALL THE WORK ON A CLEAN, SOFT SURFACE TO PREVENT DAMAGE TO THE COMPONENTS.

SUB TASK 25-41-51-040-019-A01

1. Removal and Disassembly of the Washbasin Unit (15P-1), (18-1)

NOTE: **See TABLE 3533 for the references for the replacement procedures of permanent installed parts.**

IPL FIG. ITEM	COMPONENT PART NAME	IPL FIG. ITEM	REPLACEMENT PART NAME	SEE REPAIR TASK
15P-001 15P-270	Washbasin Unit Angle	15P-280	Nut	Replacement of the Riveted Parts

Table 3533
Reference list for the replacement of permanent installed parts

(a) Remove the screws 15P-320 and the soap dispenser holder 15P-310 from the soap dispenser foot 15P-330.

(b) Remove the screw 15P-340, the washer 15P-350, the nut 15P-360 and the soap dispenser foot 15P-330 from the washbasin assembly 15P-010.

WARNING: **BE SURE THAT THE LOAD IS RELEASED BEFORE YOU REMOVE THE COMPONENT.**

(c) Remove the cotter pins 15P-180, the bolts 15P-160, the washers 15P-170 and the damper 15P-150 from the waste flap assembly 15P-020 and from the waste chute 18-010.

(d) Discard the cotter pins 15P-180.

(e) Remove the ground cable from the washbasin assembly 15P-010.

(f) Remove the screws 15P-230, the washers 15P-220 and the washbasin assembly 15P-010 from the washbasin unit bracket 15P-240.

(g) Remove the screws 15P-210, the washers 15P-220, the nuts 15P-300 and the washbasin assembly 15P-010 from the angles 15P-270.

(h) Remove the screws 15P-190, the washers 15P-200 and the washbasin assembly 15P-010 from the lavatory structure.

(i) Disassemble the washbasin assembly 15P-010 as follows:

1 Remove the screws 15P-120, the washers 15P-130, the clip nuts 15P-140 and the waste flap assembly 15P-020.

2 Disassemble the waste flap assembly 15P-020 as follows:

a Remove the screws 15P-040, the washers 15P-050 and the flap 15P-030 from the flap hinge half 15P-070.

b Disassemble the hinge assembly 15P-060 as follows:

WARNING: BE VERY CAREFUL WHEN YOU REMOVE OR INSTALL THE SPRING. BECAUSE THERE IS REMAINING TENSION IN THE SPRING, IT CAN CAUSE YOU INJURY.

Remove the retaining rings 15P-110, the axle 15P-090 and the springs 15P-100 from the flap hinge half 15P-070 and from the washbasin hinge half 15P-080.

(j) Remove the screws 15P-290, the washers 15P-200 and the angles 15P-270 from the lavatory structure.

(k) Remove the screws 15P-260, the washers 15P-200 and the washbasin unit bracket 15P-240 from the lavatory structure.

TASK 25-41-51-000-812-R01
D2549010406000 D2549010406200 D2549010406400 D2549010406800 D2549010407000 D2549020300400 D2549020300800 D2549020301000 D2549020301600 D2549020302000 D2549020412400 D2549020412600 D2549020412800 D2549020413200 D2549020413600 D2549020413800 D2549020414000 D2549020414200 D2549020414600 D2549030702000 D2549030702200 D2549030702800 D2549030703000 D2549030703200 D2549030703400 D2549030703600 D2549030703800 D2549030704000 D2549030704600 D2549030704800 D2549030705200 D2549030705600 D2549040502000 R225401136-008 R225401136-014 R225401627-002 R225401671-002 R225401689-006 R225401697-002 R225401803-002 R225401811-000

141. Removal and Disassembly of the Washbasin Unit

A. General

A complete disassembly of the component is not necessary and not recommended.

Do not disassemble the component more than it is necessary for:

- Cleaning
- Visual Inspection
- Replacement of defective parts.

B. Job Set-up Information

(1) Not applicable

C. Procedure

WARNING: **BE CAREFUL WHEN YOU USE SOLVENTS/CLEANING AGENTS, SEALANTS AND OTHER MATERIALS. OBEY THE MATERIAL MANUFACTURER'S INSTRUCTIONS AND THE LOCAL REGULATIONS. MAKE SURE THAT THERE IS A GOOD FLOW OF AIR THROUGH THE WORK AREA. DO NOT BREATHE THE FUMES. DO NOT SMOKE. DO NOT USE THESE MATERIALS NEAR A FLAME, SPARKS OR SOURCES OF HEAT. USE PROTECTIVE CLOTHING, GOGGLES AND GLOVES. IF YOU GET ONE OF THESE MATERIALS ON YOUR SKIN OR IN YOUR EYES, FLUSH IT AWAY WITH A FLOW OF CLEAN WATER. IF YOU GET ONE OF THESE MATERIALS IN YOUR MOUTH, GET IMMEDIATE MEDICAL AID. IN GENERAL, THESE MATERIALS ARE POISONOUS, FLAMMABLE AND SKIN IRRITANTS.**

CAUTION: **DO ALL THE WORK ON A CLEAN, SOFT SURFACE TO PREVENT DAMAGE TO THE COMPONENTS.**

SUB TASK 25-41-51-040-020-A01

D2549010406000 D2549010406200 D2549010406400 D2549010406800 D2549010407000 D2549020300400 D2549020300800 D2549020301000 D2549020301600 D2549020302000 D2549020412400 D2549020412600 D2549020412800 D2549020413200 D2549020413800 D2549020414000 D2549020414200 D2549020414600 D2549030702000 D2549030702800 D2549030703000 D2549030703200 D2549030703400 D2549030703600 D2549030703800 D2549030704000 D2549030704600 D2549030704800 D2549030705200 D2549030705600 D2549040502000 R225401627-002 R225401671-002 R225401689-006 R225401697-002 R225401803-002 R225401811-000

1. Removal and Disassembly of the Washbasin Unit (15Q-1), (18-1)

NOTE: **See TABLE 3534 for the references for the replacement procedures of permanent installed parts.**

IPL FIG. ITEM	COMPONENT PART NAME	IPL FIG. ITEM	REPLACEMENT PART NAME	SEE REPAIR TASK
15Q-001 15Q-250	Washbasin Unit Angle	15Q-260	Nut	Replacement of the Riveted Parts

Table 3534
Reference list for the replacement of permanent installed parts

(a) Remove the washer 15Q-400, the hand lotion dispenser 15Q-380 and the liquid soap dispenser support 15Q-390 from the washbasin assembly 15Q-010.

(b) Remove the liquid soap dispenser assembly 15Q-290 from the washbasin assembly 15Q-010.

(c) Disassemble the liquid soap dispenser assembly 15Q-290 as follows:

NOTE: **For further instructions, see CMMV 25-40-99_C5270 (liquid soap dispenser assembly).**

1 Remove the liquid soap dispenser bottle assembly 15Q-360 from the knurled nut 15Q-350.

2 Remove the knurled nut 15Q-350 and the liquid soap dispenser hose 15Q-370 from the table mounted liquid soap dispenser head assembly 15Q-300.

3 Disassemble the table mounted liquid soap dispenser head assembly 15Q-300 as follows:

a Remove the pump 15Q-310, the seal 15Q-330 and the nut 15Q-340.

WARNING: BE SURE THAT THE LOAD IS RELEASED BEFORE YOU REMOVE THE COMPONENT.

(d) Remove the cotter pins 15Q-180, the bolts 15Q-160, the washers 15Q-170 and the damper 15Q-150 from the waste flap assembly 15Q-020 and from the waste chute 18-010.

(e) Discard the cotter pins 15Q-180.

(f) Remove the ground cable from the washbasin assembly 15Q-010.

(g) Remove the screws 15Q-215, the washers 15Q-210 and the washbasin assembly 15Q-010 from the washbasin unit bracket 15Q-220.

(h) Remove the screws 15Q-195, the washers 15Q-210, the nuts 15Q-280 and the washbasin assembly 15Q-010 from the angles 15Q-250.

(i) Remove the screws 15Q-190, the washers 15Q-200 and the washbasin assembly 15Q-010 from the lavatory structure.

(j) Disassemble the washbasin assembly 15Q-010 as follows:

1 Remove the screws 15Q-120, the washers 15Q-130, the clip nuts 15Q-140 and the waste flap assembly 15Q-020.

2 Disassemble the waste flap assembly 15Q-020 as follows:

a Remove the screws 15Q-040, the washers 15Q-050 and the flap 15Q-030 from the flap hinge half 15Q-070.

b Disassemble the hinge assembly 15Q-060 as follows:

WARNING: BE VERY CAREFUL WHEN YOU REMOVE OR INSTALL THE SPRING. BECAUSE THERE IS REMAINING TENSION IN THE SPRING, IT CAN CAUSE YOU INJURY.

Remove the retaining rings 15Q-110, the axle 15Q-090 and the springs 15Q-100 from the flap hinge half 15Q-070 and from the washbasin hinge half 15Q-080.

(k) Remove the screws 15Q-270, the washers 15Q-200 and the angles 15Q-250 from the lavatory structure.

(l) Remove the screws 15Q-240, the washers 15Q-210 and the washbasin unit bracket 15Q-220 from the lavatory structure.

SUB TASK 25-41-51-040-020-B01
D2549020413600 D2549030702200 R225401136-008 R225401136-014

2. Removal and Disassembly of the Washbasin Unit (15Q-1), (18-1)

NOTE: **See TABLE 3535 for the references for the replacement procedures of permanent installed parts.**

IPL FIG. ITEM	COMPONENT PART NAME	IPL FIG. ITEM	REPLACEMENT PART NAME	SEE REPAIR TASK
15Q-001 15Q-250	Washbasin Unit Angle	15Q-260	Nut	Replacement of the Riveted Parts

Table 3535
Reference list for the replacement of permanent installed parts

(a) Remove the hand lotion dispenser 15Q-380 and the liquid soap dispenser support 15Q-390 from the washbasin assembly 15Q-010.

(b) Remove the hand lotion dispenser 15Q-380 from the liquid soap dispenser support 15Q-390.

(c) Remove the liquid soap dispenser assembly 15Q-290 from the washbasin assembly 15Q-010.

(d) Disassemble the liquid soap dispenser assembly 15Q-290 as follows:

NOTE: **For further instructions, see CMMV 25-40-99_C5270 (liquid soap dispenser assembly).**

1 Remove the liquid soap dispenser bottle assembly 15Q-360 from the knurled nut 15Q-350.

2 Remove the knurled nut 15Q-350 and the liquid soap dispenser hose 15Q-370 from the table mounted liquid soap dispenser head assembly 15Q-300.

3 Disassemble the table mounted liquid soap dispenser head assembly 15Q-300 as follows:
a Remove the pump 15Q-310, the seal 15Q-330 and the nut 15Q-340.

WARNING: **BE SURE THAT THE LOAD IS RELEASED BEFORE YOU REMOVE THE COMPONENT.**

(e) Remove the cotter pins 15Q-180, the bolts 15Q-160, the washers 15Q-170 and the damper 15Q-150 from the waste flap assembly 15Q-020 and from the waste chute 18-010.

(f) Discard the cotter pins 15Q-180.

(g) Remove the ground cable from the washbasin assembly 15Q-010.

(h) Remove the screws 15Q-215, the washers 15Q-210 and the washbasin assembly 15Q-010 from the washbasin unit bracket 15Q-220.

(i) Remove the screws 15Q-195, the washers 15Q-210, the nuts 15Q-280 and the washbasin assembly 15Q-010 from the angles 15Q-250.

(j) Remove the screws 15Q-190, the washers 15Q-200 and the washbasin assembly 15Q-010 from the lavatory structure.

(k) Disassemble the washbasin assembly 15Q-010 as follows:

1 Remove the screws 15Q-120, the washers 15Q-130, the clip nuts 15Q-140 and the waste flap assembly 15Q-020.

2 Disassemble the waste flap assembly 15Q-020 as follows:

a Remove the screws 15Q-040, the washers 15Q-050 and the flap 15Q-030 from the flap hinge half 15Q-070.

b Disassemble the hinge assembly 15Q-060 as follows:

WARNING: **BE VERY CAREFUL WHEN YOU REMOVE OR INSTALL THE SPRING. BECAUSE THERE IS REMAINING TENSION IN THE SPRING, IT CAN CAUSE YOU INJURY.**

Remove the retaining rings 15Q-110, the axle 15Q-090 and the springs 15Q-100 from the flap hinge half 15Q-070 and from the washbasin hinge half 15Q-080.

(l) Remove the screws 15Q-270, the washers 15Q-200 and the angles 15Q-250 from the lavatory structure.

(m) Remove the screws 15Q-240, the washers 15Q-210 and the washbasin unit bracket 15Q-220 from the lavatory structure.

TASK 25-41-51-000-812-S01
D2549010405600 D2549020413400 D2549020414800 D2549030701800 D2549030702600
R225401808-000 R225401814-000

142. Removal and Disassembly of the Washbasin Unit

A. General

A complete disassembly of the component is not necessary and not recommended.

Do not disassemble the component more than it is necessary for:

- Cleaning
- Visual Inspection
- Replacement of defective parts.

B. Job Set-up Information
(1) Consumable Materials

REFERENCE	DESIGNATION
08-025	Two Component Polyurethane Adhesive

Table 3536
Consumable Materials

C. Procedure

WARNING: **BE CAREFUL WHEN YOU USE SOLVENTS/CLEANING AGENTS, SEALANTS AND OTHER MATERIALS. OBEY THE MATERIAL MANUFACTURER'S INSTRUCTIONS AND THE LOCAL REGULATIONS. MAKE SURE THAT THERE IS A GOOD FLOW OF AIR THROUGH THE WORK AREA. DO NOT BREATHE THE FUMES. DO NOT SMOKE. DO NOT USE THESE MATERIALS NEAR A FLAME, SPARKS OR SOURCES OF HEAT. USE PROTECTIVE CLOTHING, GOGGLES AND GLOVES. IF YOU GET ONE OF THESE MATERIALS ON YOUR SKIN OR IN YOUR EYES, FLUSH IT AWAY WITH A FLOW OF CLEAN WATER. IF YOU GET ONE OF THESE MATERIALS IN YOUR MOUTH, GET IMMEDIATE MEDICAL AID. IN GENERAL, THESE MATERIALS ARE POISONOUS, FLAMMABLE AND SKIN IRRITANTS.**

CAUTION: **DO ALL THE WORK ON A CLEAN, SOFT SURFACE TO PREVENT DAMAGE TO THE COMPONENTS.**

SUB TASK 25-41-51-040-021-A01
D2549020413400 D2549030702600

1. Removal and Disassembly of the Washbasin Unit (15R-1), (18-1)

NOTE: **See TABLE 3537 for the references for the replacement procedures of permanent installed parts.**

More data for bonded parts are given in column SEE REPAIR TASK. Use the data for the selection of the related repair solution.

IPL FIG. ITEM	COMPONENT PART NAME	IPL FIG. ITEM	REPLACEMENT PART NAME	SEE REPAIR TASK
15R-001 15R-010	Washbasin Unit Washbasin Assembly	15R-160	Washbasin Bowl	Replacement of the Bonded Parts Material No. 08-025 Two Component Polyurethane Adhesive
15R-001 15R-270	Washbasin Unit Angle	15R-280	Nut	Replacement of the Riveted Parts

Table 3537
Reference list for the replacement of permanent installed parts

WARNING: **BE SURE THAT THE LOAD IS RELEASED BEFORE YOU REMOVE THE COMPONENT.**

(a) Remove the cotter pins 15R-360, the bolts 15R-340, the washers 15R-350 and the damper 15R-330 from the waste flap assembly 15R-030 and from the waste chute 18-010.

(b) Discard the cotter pins 15R-360.

(c) Remove the ground cable from the washbasin assembly 15R-010.

(d) Remove the screws 15R-310, the washers 15R-240 and the washbasin assembly 15R-010 from the washbasin unit bracket 15R-290.

(e) Remove the screws 15R-230, the washers 15R-240, the nuts 15R-250 and the washbasin assembly 15R-010 from the angles 15R-270.

(f) Remove the screws 15R-200, the washers 15R-210 and the washbasin assembly 15R-010 from the lavatory structure.

(g) Disassemble the washbasin assembly 15R-010 as follows:

1 Remove the screws 15R-130, the washers 15R-140, the clip nuts 15R-150 and the waste flap assembly 15R-030 from the washbasin 15R-020.

2 Disassemble the waste flap assembly 15R-030 as follows:
a Remove the screws 15R-050, the washers 15R-060 and the flap 15R-040 from the flap hinge half 15R-080.
b Disassemble the hinge assembly 15R-070 as follows:

WARNING: BE VERY CAREFUL WHEN YOU REMOVE OR INSTALL THE SPRING. BECAUSE THERE IS REMAINING TENSION IN THE SPRING, IT CAN CAUSE YOU INJURY.

Remove the retaining rings 15R-120, the axle 15R-100 and the springs 15R-110 from the flap hinge half 15R-080 and from the washbasin hinge half 15R-090.

3 Remove the screws 15R-180, the washers 15R-190 and the brackets 15R-170 from the washbasin 15R-020.

(h) Remove the screws 15R-260, the washers 15R-210 and the angles 15R-270 from the lavatory structure.

(i) Remove the screws 15R-320, the washers 15R-240 and the washbasin unit bracket 15R-290 from the lavatory structure.

SUB TASK 25-41-51-040-021-B01
D2549020414800

2. Removal and Disassembly of the Washbasin Unit (15R-1), (18-1)

NOTE: **See TABLE 3538 for the references for the replacement procedures of permanent installed parts.**

More data for bonded parts are given in column SEE REPAIR TASK. Use the data for the selection of the related repair solution.

IPL FIG. ITEM	COMPONENT PART NAME	IPL FIG. ITEM	REPLACEMENT PART NAME	SEE REPAIR TASK
15R-001 15R-010	Washbasin Unit Washbasin Assembly	15R-160	Washbasin Bowl	Replacement of the Bonded Parts Material No. 08-025 Two Component Polyurethane Adhesive
15R-001 15R-270	Washbasin Unit Angle	15R-280	Nut	Replacement of the Riveted Parts

Table 3538
Reference list for the replacement of permanent installed parts

(a) Remove the liquid soap dispenser assembly 15R-380 from the washbasin 15R-020.

(b) Disassemble the liquid soap dispenser assembly 15R-380 as follows:

NOTE: **For further instructions, see CMMV 25-40-99_C5270 (liquid soap dispenser assembly).**

1 Remove the liquid soap dispenser bottle assembly 15R-450 from the knurled nut 15R-440.

2 Remove the knurled nut 15R-440 and the liquid soap dispenser hose 15R-460 from the table mounted liquid soap dispenser head assembly 15R-390.

3 Disassemble the table mounted liquid soap dispenser head assembly 15R-390 as follows:
a Remove the pump 15R-400, the seal 15R-420 and the nut 15R-430.

WARNING: **BE SURE THAT THE LOAD IS RELEASED BEFORE YOU REMOVE THE COMPONENT.**

(c) Remove the cotter pins 15R-360, the bolts 15R-340, the washers 15R-350 and the damper 15R-330 from the waste flap assembly 15R-030 and from the waste chute 18-010.

(d) Discard the cotter pins 15R-360.

(e) Remove the ground cable from the washbasin assembly 15R-010.

(f) Remove the screws 15R-310, the washers 15R-240 and the washbasin assembly 15R-010 from the washbasin unit bracket 15R-290.

(g) Remove the screws 15R-230, the washers 15R-240, the nuts 15R-250 and the washbasin assembly 15R-010 from the angles 15R-270.

(h) Remove the screws 15R-200, the washers 15R-210 and the washbasin assembly 15R-010 from the lavatory structure.

(i) Disassemble the washbasin assembly 15R-010 as follows:

1 Remove the screws 15R-130, the washers 15R-140, the clip nuts 15R-150 and the waste flap assembly 15R-030 from the washbasin 15R-020.

2 Disassemble the waste flap assembly 15R-030 as follows:

a Remove the screws 15R-050, the washers 15R-060 and the flap 15R-040 from the flap hinge half 15R-080.

b Disassemble the hinge assembly 15R-070 as follows:

WARNING: **BE VERY CAREFUL WHEN YOU REMOVE OR INSTALL THE SPRING. BECAUSE THERE IS REMAINING TENSION IN THE SPRING, IT CAN CAUSE YOU INJURY.**

Remove the retaining rings 15R-120, the axle 15R-100 and the springs 15R-110 from the flap hinge half 15R-080 and from the washbasin hinge half 15R-090.

3 Remove the screws 15R-180, the washers 15R-190 and the brackets 15R-170 from the washbasin 15R-020.

(j) Remove the screws 15R-260, the washers 15R-210 and the angles 15R-270 from the lavatory structure.

(k) Remove the screws 15R-320, the washers 15R-240 and the washbasin unit bracket 15R-290 from the lavatory structure.

SUB TASK 25-41-51-040-021-C01
D2549010405600 D2549030701800 R225401808-000 R225401814-000

3. Removal and Disassembly of the Washbasin Unit (15R-1), (18-1)

NOTE: **See TABLE 3539 for the references for the replacement procedures of permanent installed parts.**

More data for bonded parts are given in column SEE REPAIR TASK. Use the data for the selection of the related repair solution.

IPL FIG. ITEM	COMPONENT PART NAME	IPL FIG. ITEM	REPLACEMENT PART NAME	SEE REPAIR TASK
15R-001 15R-010	Washbasin Unit Washbasin Assembly	15R-160	Washbasin Bowl	Replacement of the Bonded Parts Material No. 08-025 Two Component Polyurethane Adhesive
15R-001 15R-270	Washbasin Unit Angle	15R-280	Nut	Replacement of the Riveted Parts

Table 3539
Reference list for the replacement of permanent installed parts

(a) Remove the liquid soap dispenser bottle 15R-220 and the liquid soap dispenser support 15R-370 from the washbasin 15R-020.

(b) Remove the liquid soap dispenser bottle 15R-220 from the liquid soap dispenser support 15R-370.

WARNING: **BE SURE THAT THE LOAD IS RELEASED BEFORE YOU REMOVE THE COMPONENT.**

(c) Remove the cotter pins 15R-360, the bolts 15R-340, the washers 15R-350 and the damper 15R-330 from the waste flap assembly 15R-030 and from the waste chute 18-010.

(d) Discard the cotter pins 15R-360.

(e) Remove the ground cable from the washbasin assembly 15R-010.

(f) Remove the screws 15R-310, the washers 15R-240 and the washbasin assembly 15R-010 from the washbasin unit bracket 15R-290.

(g) Remove the screws 15R-230, the washers 15R-240, the nuts 15R-250 and the washbasin assembly 15R-010 from the angles 15R-270.

(h) Remove the screws 15R-200, the washers 15R-210 and the washbasin assembly 15R-010 from the lavatory structure.

(i) Disassemble the washbasin assembly 15R-010 as follows:

1 Remove the screws 15R-130, the washers 15R-140, the clip nuts 15R-150 and the waste flap assembly 15R-030 from the washbasin 15R-020.

2 Disassemble the waste flap assembly 15R-030 as follows:

a Remove the screws 15R-050, the washers 15R-060 and the flap 15R-040 from the flap hinge half 15R-080.

b Disassemble the hinge assembly 15R-070 as follows:

WARNING: BE VERY CAREFUL WHEN YOU REMOVE OR INSTALL THE SPRING. BECAUSE THERE IS REMAINING TENSION IN THE SPRING, IT CAN CAUSE YOU INJURY.

Remove the retaining rings 15R-120, the axle 15R-100 and the springs 15R-110 from the flap hinge half 15R-080 and from the washbasin hinge half 15R-090.

3 Remove the screws 15R-180, the washers 15R-190 and the brackets 15R-170 from the washbasin 15R-020.

(j) Remove the screws 15R-260, the washers 15R-210 and the angles 15R-270 from the lavatory structure.

(k) Remove the screws 15R-320, the washers 15R-240 and the washbasin unit bracket 15R-290 from the lavatory structure.

TASK 25-41-51-000-812-T01
D2549020300600 D2549020301800 D2549030704200 D2549030704400

143. Removal and Disassembly of the Washbasin Unit

A. General

A complete disassembly of the component is not necessary and not recommended.

Do not disassemble the component more than it is necessary for:

- Cleaning
- Visual Inspection
- Replacement of defective parts.

B. Job Set-up Information

(1) Not applicable

C. Procedure

WARNING: BE CAREFUL WHEN YOU USE SOLVENTS/CLEANING AGENTS, SEALANTS AND OTHER MATERIALS. OBEY THE MATERIAL MANUFACTURER'S INSTRUCTIONS AND THE LOCAL REGULATIONS. MAKE SURE THAT THERE IS A GOOD FLOW OF AIR THROUGH THE WORK AREA. DO NOT BREATHE THE FUMES. DO NOT SMOKE. DO NOT USE THESE MATERIALS NEAR A FLAME, SPARKS OR SOURCES OF HEAT. USE PROTECTIVE CLOTHING, GOGGLES AND GLOVES. IF YOU GET ONE OF THESE MATERIALS ON YOUR SKIN OR IN YOUR EYES, FLUSH IT AWAY WITH A FLOW OF CLEAN WATER. IF YOU GET ONE OF THESE MATERIALS IN YOUR MOUTH, GET IMMEDIATE MEDICAL AID. IN GENERAL, THESE MATERIALS ARE POISONOUS, FLAMMABLE AND SKIN IRRITANTS.

CAUTION: DO ALL THE WORK ON A CLEAN, SOFT SURFACE TO PREVENT DAMAGE TO THE COMPONENTS.

SUB TASK 25-41-51-040-022-A01

1. Removal and Disassembly of the Washbasin Unit (15S-1)

NOTE: **See TABLE 3540 for the references for the replacement procedures of permanent installed parts.**

IPL FIG. ITEM	COMPONENT PART NAME	IPL FIG. ITEM	REPLACEMENT PART NAME	SEE REPAIR TASK/ SPM REFERENCE
15S-001 15S-170	Washbasin Unit Angle	15S-180	Nut	Replacement of the Riveted Parts
15S-001 15S-220	Washbasin Unit Bracket	15S-230	Insert	SPM 25-00-01
15S-001 15S-240	Washbasin Unit Bracket	15S-250	Insert	SPM 25-00-01

Table 3540
Reference list for the replacement of permanent installed parts

(a) Remove the liquid soap dispenser assembly 15S-260 from the washbasin 15S-030.

(b) Disassemble the liquid soap dispenser assembly 15S-260 as follows:

NOTE: **For further instructions, see CMMV 25-40-99_C5270 (liquid soap dispenser assembly).**

1 Remove the liquid soap dispenser bottle assembly 15S-330 from the knurled nut 15S-320.

2 Remove the knurled nut 15S-320 and the liquid soap dispenser hose 15S-340 from the table mounted liquid soap dispenser head assembly 15S-270.

3 Disassemble the table mounted liquid soap dispenser head assembly 15S-270 as follows:
a Remove the pump 15S-280, the seal 15S-300 and the nut 15S-310.

(c) Remove the ground cable from the washbasin assembly 15S-010.

(d) Remove the screw 15S-190, the washer 15S-200, the nut 15S-210 and the washbasin assembly 15S-010 from the washbasin bracket 15S-160.

(e) Remove the screws 15S-120, the washers 15S-150, the brackets 15S-220, 15S-240 and the washbasin assembly 15S-010 from the angles 15S-170.

(f) Remove the screws 15S-120, the washers 15S-130, the rear cover 15S-020 and the washbasin assembly 15S-010 from the lavatory structure.

(g) Disassemble the washbasin assembly 15S-010 as follows:

1 Remove the screws 15S-090, the washers 15S-100, the nuts 15S-110 and the flap assembly 15S-040 from the washbasin 15S-030.

2 Disassemble the flap assembly 15S-040 as follows:
a

WARNING: BE VERY CAREFUL WHEN YOU REMOVE OR INSTALL THE SPRING. BECAUSE THERE IS REMAINING TENSION IN THE SPRING, IT CAN CAUSE YOU INJURY.

Remove the splints 15S-070, the pins 15S-060, the springs 15S-080 and the flap 15S-050.

(h) Remove the screw 15S-120, the washer 15S-150 and the bracket 15S-220 from the lavatory structure.

(i) Remove the screws 15S-140, the washers 15S-130 and the angles 15S-170 from the lavatory structure.

(j) Remove the screws 15S-140, the washers 15S-150 and the washbasin bracket 15S-160 from the lavatory structure.

TASK 25-41-51-000-812-U01
D2549030610200

144. Removal and Disassembly of the Washbasin Unit

A. General

A complete disassembly of the component is not necessary and not recommended.

Do not disassemble the component more than it is necessary for:

- Cleaning
- Visual Inspection
- Replacement of defective parts.

B. Job Set-up Information
(1) Consumable Materials

REFERENCE	DESIGNATION
08-025	Two Component Polyurethane Adhesive

Table 3541
Consumable Materials

C. Procedure

WARNING: **BE CAREFUL WHEN YOU USE SOLVENTS/CLEANING AGENTS, SEALANTS AND OTHER MATERIALS. OBEY THE MATERIAL MANUFACTURER'S INSTRUCTIONS AND THE LOCAL REGULATIONS. MAKE SURE THAT THERE IS A GOOD FLOW OF AIR THROUGH THE WORK AREA. DO NOT BREATHE THE FUMES. DO NOT SMOKE. DO NOT USE THESE MATERIALS NEAR A FLAME, SPARKS OR SOURCES OF HEAT. USE PROTECTIVE CLOTHING, GOGGLES AND GLOVES. IF YOU GET ONE OF THESE MATERIALS ON YOUR SKIN OR IN YOUR EYES, FLUSH IT AWAY WITH A FLOW OF CLEAN WATER. IF YOU GET ONE OF THESE MATERIALS IN YOUR MOUTH, GET IMMEDIATE MEDICAL AID. IN GENERAL, THESE MATERIALS ARE POISONOUS, FLAMMABLE AND SKIN IRRITANTS.**

CAUTION: **DO ALL THE WORK ON A CLEAN, SOFT SURFACE TO PREVENT DAMAGE TO THE COMPONENTS.**

SUB TASK 25-41-51-040-023-A01
D2549030610200

1. Removal and Disassembly of the Washbasin Unit (15T-1), (18-1)

NOTE: **See TABLE 3542 for the references for the replacement procedures of permanent installed parts.**

More data for bonded parts are given in column SEE REPAIR TASK. Use the data for the selection of the related repair solution.

IPL FIG. ITEM	COMPONENT PART NAME	IPL FIG. ITEM	REPLACEMENT PART NAME	SEE REPAIR TASK
15T-001 15T-010	Washbasin Unit Washbasin Assembly	15T-030	Washbasin Unit Bowl	Replacement of the Bonded Parts Material No. 08-025 Two Component Polyurethane Adhesive

Table 3542
Reference list for the replacement of permanent installed parts

(a) Remove the screws 15T-340, the washers 15T-350, the nuts 15T-360 and soap dispenser holder 15T-330 from the washbasin 15T-020.

(b) Remove the screws 15T-320, the washers 15T-400, the cosmetics holder 15T-310 and the spacer 15T-390 from the washbasin 15T-020.

(c) Remove the screws 15T-300 and the vase 15T-290 from the washbasin 15T-020.

WARNING: **BE SURE THAT THE LOAD IS RELEASED BEFORE YOU REMOVE THE COMPONENT.**

(d) Remove the lock pins 15T-240, the bolts 15T-220, the washers 15T-230 and the damper 15T-210 from the waste flap assembly 15T-040 and from the waste chute 18-010.

(e) Discard the lock pins 15T-240.

(f) Remove the ground cable from the washbasin assembly 15T-010.

(g) Remove the screws 15T-270, the washers 15T-410 and the washbasin assembly 15T-010 from the washbasin unit bracket 15T-190.

(h) Remove the screws 15T-270, the washers 15T-380, the nuts 15T-280 and the washbasin assembly 15T-010 from the fittings 15T-370.

(i) Remove the screws 15T-270, 15T-420, the washers 15T-380, 15T-410 and the washbasin assembly 15T-010 from the lavatory structure.

(j) Disassemble the washbasin assembly 15T-010 as follows:

1 Remove the screws 15T-140, the washers 15T-150, the clip nuts 15T-160 and the waste flap assembly 15T-040 from the washbasin 15T-020.

2 Disassemble the waste flap assembly 15T-040 as follows:
a Remove the screws 15T-060, the washers 15T-070 and the flap 15T-050 from the flap hinge half 15T-090.
b Disassemble the hinge assembly 15T-080 as follows:

WARNING: BE VERY CAREFUL WHEN YOU REMOVE OR INSTALL THE SPRING. BECAUSE THERE IS REMAINING TENSION IN THE SPRING, IT CAN CAUSE YOU INJURY.

Remove the retaining rings 15T-130, the axle 15T-110 and the springs 15T-120 from the flap hinge half 15T-090 and from the washbasin hinge half 15T-100.

3 Remove the screws 15T-170 and the washers 15T-180 from the washbasin 15T-020.

(k) Remove the screws 15T-250, the washers 15T-380 and the fittings 15T-370 from the lavatory structure.

(l) Remove the screws 15T-260, the washers 15T-410 and the washbasin unit bracket 15T-190 from the lavatory structure.

TASK 25-41-51-000-812-V01
D2549020712000 D2549020712600 D2549030701200

145. Removal and Disassembly of the Washbasin Unit

A. General

A complete disassembly of the component is not necessary and not recommended.

Do not disassemble the component more than it is necessary for:

- Cleaning
- Visual Inspection
- Replacement of defective parts.

B. Job Set-up Information
(1) Consumable Materials

REFERENCE	DESIGNATION
08-025	Two Component Polyurethane Adhesive

Table 3543
Consumable Materials

C. Procedure

WARNING: **BE CAREFUL WHEN YOU USE SOLVENTS/CLEANING AGENTS, SEALANTS AND OTHER MATERIALS. OBEY THE MATERIAL MANUFACTURER'S INSTRUCTIONS AND THE LOCAL REGULATIONS. MAKE SURE THAT THERE IS A GOOD FLOW OF AIR THROUGH THE WORK AREA. DO NOT BREATHE THE FUMES. DO NOT SMOKE. DO NOT USE THESE MATERIALS NEAR A FLAME, SPARKS OR SOURCES OF HEAT. USE PROTECTIVE CLOTHING, GOGGLES AND GLOVES. IF YOU GET ONE OF THESE MATERIALS ON YOUR SKIN OR IN YOUR EYES, FLUSH IT AWAY WITH A FLOW OF CLEAN WATER. IF YOU GET ONE OF THESE MATERIALS IN YOUR MOUTH, GET IMMEDIATE MEDICAL AID. IN GENERAL, THESE MATERIALS ARE POISONOUS, FLAMMABLE AND SKIN IRRITANTS.**

CAUTION: **DO ALL THE WORK ON A CLEAN, SOFT SURFACE TO PREVENT DAMAGE TO THE COMPONENTS.**

SUB TASK 25-41-51-040-115-A01

1. Removal and Disassembly of the Washbasin Unit (15U-1), (18-1)

NOTE: **See TABLE 3544 for the references for the replacement procedures of permanent installed parts.**

More data for bonded parts are given in column SEE REPAIR TASK. Use the data for the selection of the related repair solution.

IPL FIG. ITEM	COMPONENT PART NAME	IPL FIG. ITEM	REPLACEMENT PART NAME	SEE REPAIR TASK
15U-001 15U-010	Washbasin Unit Washbasin Assembly	15U-030	Washbasin Unit Bowl	Replacement of the Bonded Parts Material No. 08-025 Two Component Polyurethane Adhesive

Table 3544
Reference list for the replacement of permanent installed parts

(a) Remove the screws 15U-340, the washers 15U-350, the nuts 15U-360 and soap dispenser holder 15U-330 from the washbasin 15U-020.

(b) Remove the screws 15U-320, the washers 15U-400, the cosmetics holder 15U-310 and the spacer 15U-390 from the washbasin 15U-020.

(c) Remove the screws 15U-300 and the vase 15U-290 from the washbasin 15U-020.

WARNING: **BE SURE THAT THE LOAD IS RELEASED BEFORE YOU REMOVE THE COMPONENT.**

(d) Remove the cotter pins 15U-240, the bolts 15U-220, the washers 15U-230 and the damper 15U-210 from the waste flap assembly 15U-040 and from the waste chute 18-010.

(e) Discard the cotter pins 15U-240.

(f) Remove the ground cable from the washbasin assembly 15U-010.

(g) Remove the screws 15U-270, the washers 15U-410 and the washbasin assembly 15U-010 from the washbasin unit bracket 15U-190.

(h) Remove the screws 15U-270, the washers 15U-380, the nuts 15U-280 and the washbasin assembly 15U-010 from the fittings 15U-370.

(i) Remove the screws 15U-270, 15U-420, the washers 15U-380, 15U-410 and the washbasin assembly 15U-010 from the lavatory structure.

(j) Disassemble the washbasin assembly 15U-010 as follows:

1 Remove the screws 15U-140, the washers 15U-150, the clip nuts 15U-160 and the waste flap assembly 15U-040 from the washbasin 15U-020.

2 Disassemble the waste flap assembly 15U-040 as follows:
a Remove the screws 15U-060, the washers 15U-070 and the flap 15U-050 from the flap hinge half 15U-090.
b Disassemble the hinge assembly 15U-080 as follows:

WARNING: BE VERY CAREFUL WHEN YOU REMOVE OR INSTALL THE SPRING. BECAUSE THERE IS REMAINING TENSION IN THE SPRING, IT CAN CAUSE YOU INJURY.

Remove the retaining rings 15U-130, the axle 15U-110 and the springs 15U-120 from the flap hinge half 15U-090 and from the washbasin hinge half 15U-100.

3 Remove the screws 15U-170 and the washers 15U-180 from the washbasin 15U-020.

(k) Remove the screws 15U-250, the washers 15U-380 and the fittings 15U-370 from the lavatory structure.

(l) Remove the screws 15U-260, the washers 15U-410 and the washbasin unit bracket 15U-190 from the lavatory structure.

TASK 25-41-51-000-813-A01

D2547161903000 D2549010500000 D2549010500400 D2549010500600 D2549010500800 D2549010501000 D2549010501200 D2549010501400 D2549010501600 D2549010501800 D2549010502000 D2549010502200 D2549010502400 D2549010502600 D2549010502800 D2549010503200 D2549010503400 D2549010503600 D2549010503800 D2549010504200 D2549010504400 D2549010504600 D2549010504800 D2549010505000 D2549010505200 D2549010505400 D2549010505600 D2549010505800 D2549010506000 D2549010506200 D2549010506400 D2549010507000 D2549010507200 D2549010507400 D2549010507600 D2549010507800 D2549010508000 D2549010606200 D2549020500000 D2549020500200 D2549020500400 D2549020500600 D2549020500800 D2549020501000 D2549020501200 D2549020501400 D2549020501600 D2549020501800 D2549020502000 D2549020502400 D2549020502600 D2549020502800 D2549020503000 D2549020503200 D2549020503400 D2549020503600 D2549020503800 D2549020504000 D2549020504200 D2549020504400 D2549020504600 D2549020504800 D2549020505000 D2549020505200 D2549020505800 D2549020506000 D2549020600000 D2549020600200 D2549020600400 D2549020600800 D2549020601000 D2549020601200 D2549020601400 D2549020601600 D2549020602000 D2549020602400 D2549020602800 D2549030500200 D2549030500400 D2549030500600 D2549030500800 D2549030501000 D2549030501200 D2549030501400 D2549030501600 D2549030501800 D2549030502000 D2549030502200 D2549030502400 D2549030502600 D2549030502800 D2549030503000 D2549030503200 D2549030503400 R225401107-000 R225401115-002 R225401128-000 R225401133-000 R225401134-000 R225401139-000 R225401146-000 R225401146-002 R225401188-000 R225401188-002 R225401188-004 R225401188-006

146. Removal and Disassembly of the Door Assembly of the Washbasin Unit

A. General

A complete disassembly of the component is not necessary and not recommended.

Do not disassemble the component more than it is necessary for:

- Cleaning
- Visual Inspection
- Replacement of defective parts.

B. Job Set-up Information

(1) Not applicable

C. Procedure

WARNING: **BE CAREFUL WHEN YOU USE SOLVENTS/CLEANING AGENTS, SEALANTS AND OTHER MATERIALS. OBEY THE MATERIAL MANUFACTURER'S INSTRUCTIONS AND THE LOCAL REGULATIONS. MAKE SURE THAT THERE IS A GOOD FLOW OF AIR THROUGH THE WORK AREA. DO NOT BREATHE THE FUMES. DO NOT SMOKE. DO NOT USE THESE MATERIALS NEAR A FLAME, SPARKS OR SOURCES OF HEAT. USE PROTECTIVE CLOTHING, GOGGLES AND GLOVES. IF YOU GET ONE OF THESE MATERIALS ON YOUR SKIN OR IN YOUR EYES, FLUSH IT AWAY WITH A FLOW OF CLEAN WATER. IF YOU GET ONE OF THESE MATERIALS IN YOUR MOUTH, GET IMMEDIATE MEDICAL AID. IN GENERAL, THESE MATERIALS ARE POISONOUS, FLAMMABLE AND SKIN IRRITANTS.**

CAUTION: **DO ALL THE WORK ON A CLEAN, SOFT SURFACE TO PREVENT DAMAGE TO THE COMPONENTS.**

SUB TASK 25-41-51-000-115-A01
D2549010606200

1. Removal and Disassembly of the Door Assembly of the Washbasin Unit (16-1)

NOTE: **See TABLE 3545 for the references for the replacement procedures of permanent installed parts.**

More data for bonded parts are given in column SEE REPAIR TASK. Use the data for the selection of the related repair solution.

IPL FIG. ITEM	COMPONENT PART NAME	IPL FIG. ITEM	REPLACEMENT PART NAME	SEE REPAIR TASK
16-001 16-010	Washbasin-Unit Door Assembly Washbasin-Unit Door Assembly	16-070	Sliding Strip	Replacement of the Bonded Parts self adhesive

Table 3545
Reference list for the replacement of permanent installed parts

(a) Remove and disassemble the washbasin-unit door assembly 16-010 as follows:

1 Remove the washbasin-unit door assembly 16-010 and the attach pins 16-020, 16-030 from the mounting angle assemblies 16-080, 16-100.

2 Remove the attach pins 16-020, 16-030 from the washbasin-unit door assembly 16-010.

3 Remove the screws 16-050, the mounting plate 16-040 and the latch assembly 16-060 from the washbasin-unit door assembly 16-010.

(b) Remove the screws 16-120 and the mounting angle assembly 16-080.

(c) Disassemble the mounting angle assembly 16-080 as follows:

1 Remove the bushing 16-090 from the mounting angle 16-085.

(d) Remove the screws 16-120 and the mounting angle assembly 16-100.

(e) Disassemble the mounting angle assembly 16-100 as follows:

1 Remove the bushing 16-110 from the mounting angle 16-115.

(f) Remove the screws 16-120, the angle 16-150 and the sealing section 16-160 from the lavatory structure.

(g) Remove the screws 16-180 and the lock insert 16-170 from the angle 16-150.

SUB TASK 25-41-51-000-115-B01

2. Removal and Disassembly of the Door Assembly of the Washbasin Unit (16-1)

NOTE: See TABLE 3546 for the references for the replacement procedures of permanent installed parts.

More data for bonded parts are given in column SEE REPAIR TASK. Use the data for the selection of the related repair solution.

IPL FIG. ITEM	COMPONENT PART NAME	IPL FIG. ITEM	REPLACEMENT PART NAME	SEE REPAIR TASK
16-001 16-010	Washbasin-Unit Door Assembly Washbasin-Unit Door Assembly	16-070	Sliding Strip	Replacement of the Bonded Parts self adhesive

Table 3546
Reference list for the replacement of permanent installed parts

(a) Remove and disassemble the washbasin-unit door assembly 16-010 as follows:

1 Remove the washbasin-unit door assembly 16-010 and the attach pins 16-020, 16-030 from the mounting angle assemblies 16-080, 16-100.

2 Remove the attach pins 16-020, 16-030 from the washbasin-unit door assembly 16-010.

3 Remove the screws 16-050, the mounting plate 16-040 and the latch assembly 16-060 from the washbasin-unit door assembly 16-010.

(b) Remove the screws 16-120, the washers 16-130 and the mounting angle assembly 16-080.

(c) Disassemble the mounting angle assembly 16-080 as follows:

1 Remove the bushing 16-090 from the mounting angle 16-085.

(d) Remove the screws 16-120, the washers 16-130 and the mounting angle assembly 16-100.

(e) Disassemble the mounting angle assembly 16-100 as follows:

1 Remove the bushing 16-110 from the mounting angle 16-115.

(f) Remove the screws 16-120, the washers 16-130, the angle 16-150 and the sealing section 16-160 from the lavatory structure.

(g) Remove the screws 16-180, the washers 16-135 and the lock insert 16-170 from the angle 16-150.

TASK 25-41-51-000-813-B01
D2549010506800 D2549010508200 D2549010508400 D2549010508600 D2549010508800 D2549010509000 D2549010509200 D2549010511200 D2549020505400 D2549020601800 D2549020602600 D2549020603000 D2549020603200 D2549020603400 D2549020603600 D2549020603800 D2549020604000 D2549020606400 D2549020606600 D2549020607200 D2549030503600 R225401107-002 R225401145-000

147. Removal and Disassembly of the Door Assembly of the Washbasin Unit

A. General

A complete disassembly of the component is not necessary and not recommended.

Do not disassemble the component more than it is necessary for:

- Cleaning
- Visual Inspection
- Replacement of defective parts.

B. Job Set-up Information

(1) Not applicable

C. Procedure

WARNING: BE CAREFUL WHEN YOU USE SOLVENTS/CLEANING AGENTS, SEALANTS AND OTHER MATERIALS. OBEY THE MATERIAL MANUFACTURER'S INSTRUCTIONS AND THE LOCAL REGULATIONS. MAKE SURE THAT THERE IS A GOOD FLOW OF AIR THROUGH THE WORK AREA. DO NOT BREATHE THE FUMES. DO NOT SMOKE. DO NOT USE THESE MATERIALS NEAR A FLAME, SPARKS OR SOURCES OF HEAT. USE PROTECTIVE CLOTHING, GOGGLES AND GLOVES. IF YOU GET ONE OF THESE MATERIALS ON YOUR SKIN OR IN YOUR EYES, FLUSH IT AWAY WITH A FLOW OF CLEAN WATER. IF YOU GET ONE OF THESE MATERIALS IN YOUR MOUTH, GET IMMEDIATE MEDICAL AID. IN GENERAL, THESE MATERIALS ARE POISONOUS, FLAMMABLE AND SKIN IRRITANTS.

CAUTION: DO ALL THE WORK ON A CLEAN, SOFT SURFACE TO PREVENT DAMAGE TO THE COMPONENTS.

SUB TASK 25-41-51-000-116-A01
1. Removal and Disassembly of the Door Assembly of the Washbasin Unit (16A-1)

NOTE: **See TABLE 3547 for the references for the replacement procedures of permanent installed parts.**

More data for bonded parts are given in column SEE REPAIR TASK. Use the data for the selection of the related repair solution.

IPL FIG. ITEM	COMPONENT PART NAME	IPL FIG. ITEM	REPLACEMENT PART NAME	SEE REPAIR TASK
16A-001 16A-010	Washbasin-Unit Door Assembly Washbasin-Unit Door Assembly	16A-070	Sliding Strip	Replacement of the Bonded Parts self adhesive

Table 3547
Reference list for the replacement of permanent installed parts

(a) Remove and disassemble the washbasin-unit door assembly 16A-010 as follows:

1 Remove the washbasin-unit door assembly 16A-010 and the attach pins 16A-020, 16A-030 from the mounting angle assemblies 16A-080, 16A-100.

2 Remove the attach pins 16A-020, 16A-030 from the washbasin-unit door assembly 16A-010.

3 Remove the screws 16A-050, the mounting plate 16A-040 and the latch assembly 16A-060 from the washbasin-unit door assembly 16A-010.

(b) Remove the screws 16A-120, the washers 16A-130 and the mounting angle assembly 16A-080.

(c) Disassemble the mounting angle assembly 16A-080 as follows:

1 Remove the bushing 16A-090 from the mounting angle 16A-085.

(d) Remove the screws 16A-120, 16A-122, the washers 16A-130 and the mounting angle assembly 16A-100.

(e) Disassemble the mounting angle assembly 16A-100 as follows:

1 Remove the bushing 16A-110 from the mounting angle 16A-105.

(f) Remove the screws 16A-120, the washers 16A-130, the angle 16A-150 and the sealing section 16A-160 from the lavatory structure.

(g) Remove the screws 16A-180, the washers 16A-140 and the lock insert 16A-170 from the angle 16A-150.

TASK 25-41-51-000-813-C01

D2549010400000 D2549010400400 D2549010401800 D2549010402400 D2549010403200
D2549010404000 D2549010404200 D2549010404600 D2549010404800 D2549010405600
D2549010509400 D2549010509600 D2549010509800 D2549010510000 D2549010510200
D2549010510400 D2549010510800 D2549010511000 D2549010511400 D2549010511600
D2549010511800 D2549010512000 D2549010512200 D2549010512400 D2549010512600
D2549010513000 D2549010513200 D2549010513400 D2549010513600 D2549010513800
D2549010514000 D2549010514200 D2549010514600 D2549010514800 D2549010600000
D2549010600200 D2549010600400 D2549010600600 D2549010600800 D2549010601000
D2549010601200 D2549010601400 D2549010601600 D2549010601800 D2549010602000
D2549010602200 D2549010602400 D2549010602600 D2549010602800 D2549010603200
D2549010603800 D2549010604000 D2549010604200 D2549010604400 D2549010604600
D2549010604800 D2549010605000 D2549010605600 D2549010606000 D2549010606400
D2549010606600 D2549010606800 D2549010607000 D2549010607200 D2549010607400
D2549010607800 D2549010608600 D2549010608800 D2549010609000 D2549010609200
D2549010609400 D2549010609600 D2549010610000 D2549010610200 D2549010610600
D2549010611400 D2549010611600 D2549010612000 D2549010612200 D2549010612400
D2549010613000 D2549010613200 D2549010613600 D2549010614400 D2549010614800
D2549020301000 D2549020402200 D2549020402400 D2549020403000 D2549020403400
D2549020404200 D2549020406600 D2549020406800 D2549020408600 D2549020408800
D2549020409000 D2549020410600 D2549020410800 D2549020411000 D2549020411800
D2549020412200 D2549020412800 D2549020413000 D2549020413600 D2549020414000
D2549020505600 D2549020506200 D2549020506400 D2549020506600 D2549020506800
D2549020507000 D2549020507200 D2549020507400 D2549020507600 D2549020507800
D2549020508200 D2549020508400 D2549020508600 D2549020508800 D2549020509000
D2549020509200 D2549020509600 D2549020510400 D2549020511200 D2549020512000
D2549020512800 D2549020513200 D2549020513400 D2549020513600 D2549020513800
D2549020514000 D2549020514800 D2549020604200 D2549020604400 D2549020605000
D2549020605200 D2549020605600 D2549020605800 D2549020606000 D2549020607000
D2549020607800 D2549020608200 D2549020608400 D2549020608600 D2549020608800
D2549020609200 D2549020609400 D2549020609800 D2549020610000 D2549020610200
D2549020610400 D2549020610600 D2549020611000 D2549020611200 D2549020611400
D2549020611600 D2549020611800 D2549020612000 D2549020612200 D2549020612400
D2549020612600 D2549020612800 D2549020613000 D2549020613600 D2549020614000
D2549020614400 D2549020614600 D2549020614800 D2549020700000 D2549020700200
D2549020700800 D2549020701000 D2549020701600 D2549020701800 D2549020702000
D2549020702400 D2549020702600 D2549020702800 D2549020703200 D2549020703400
D2549020703600 D2549020703800 D2549020704000 D2549020704200 D2549020704400
D2549020704600 D2549020704800 D2549020705000 D2549020705200 D2549020705400
D2549020705600 D2549020706400 D2549020706800 D2549020707000 D2549020707200
D2549020707400 D2549020707600 D2549020708000 D2549020708200 D2549020708400
D2549020708600 D2549020709200 D2549020709400 D2549020709600 D2549020709800
D2549020710200 D2549020710400 D2549020710600 D2549020711000 D2549020711200
D2549020711400 D2549020712200 D2549020713200 D2549020713400 D2549020713800
D2549020714000 D2549020714400 D2549020800000 D2549020800600 D2549020801000
D2549020801400 D2549020801600 D2549020801800 D2549020802200 D2549020803600
D2549020804000 D2549020804200 D2549020804800 D2549020805000 D2549020805400

D2549020805800 D2549020806000 D2549020807000 D2549020808600 D2549020809800
D2549020810200 D2549020810600 D2549020811800 D2549020812600 D2549020813000
D2549020813800 D2549020814000 D2549030400000 D2549030400200 D2549030400400
D2549030401200 D2549030401400 D2549030401600 D2549030402000 D2549030402400
D2549030402600 D2549030402800 D2549030403000 D2549030403400 D2549030403600
D2549030403800 D2549030404000 D2549030404200 D2549030404400 D2549030404600
D2549030404800 D2549030405200 D2549030405600 D2549030405800 D2549030406000
D2549030406400 D2549030406800 D2549030407000 D2549030407600 D2549030407800
D2549030408000 D2549030408200 D2549030408400 D2549030408600 D2549030409000
D2549030409200 D2549030409400 D2549030411200 D2549030411400 D2549030411600
D2549030411800 D2549030412000 D2549030412200 D2549030412400 D2549030413400
D2549030414000 D2549030414600 D2549030414800 D2549030503800 D2549030504000
D2549030504200 D2549030504600 D2549030504800 D2549030505200 D2549030505400
D2549030505600 D2549030505800 D2549030506000 D2549030506400 D2549030506600
D2549030506800 D2549030507000 D2549030507600 D2549030507800 D2549030508000
D2549030508200 D2549030508400 D2549030508800 D2549030509000 D2549030509200
D2549030509400 D2549030509600 D2549030509800 D2549030510000 D2549030510400
D2549030510600 D2549030510800 D2549030511000 D2549030511200 D2549030511400
D2549030511600 D2549030511800 D2549030512000 D2549030512200 D2549030512400
D2549030512800 D2549030513000 D2549030513200 D2549030513400 D2549030513600
D2549030513800 D2549030514000 D2549030514400 D2549030514600 D2549030514800
D2549030600000 D2549030600200 D2549030600400 D2549030601200 D2549030601400
D2549030601800 D2549030602000 D2549030602200 D2549030602400 D2549030602800
D2549030603000 D2549030603200 D2549030603400 D2549030603800 D2549030604200
D2549030604400 D2549030604600 D2549030604800 D2549030605000 D2549030605200
D2549030605400 D2549030605600 D2549030606200 D2549030606400 D2549030606800
D2549030607000 D2549030607200 D2549030607400 D2549030607600 D2549030608000
D2549030608200 D2549030608600 D2549030608800 D2549030609000 D2549030609200
D2549030609800 D2549030610000 D2549030610400 D2549030610600 D2549030611000
D2549030611200 D2549030611400 D2549030611600 D2549030612000 D2549030612400
D2549030612800 D2549030613200 D2549030613600 D2549030613800 D2549030614000
D2549030614200 D2549030614400 D2549030614600 D2549030614800 D2549030700000
D2549030700200 D2549030700800 D2549030701800 D2549030702200 D2549030703200
D2549030703600 D2549030704200 D2549030704400 D2549030704600 D2549030705600
D2549040500200 D2549040501800 D2549040502000 R225401107-004 R225401115-000
R225401134-002 R225401134-004 R225401134-006 R225401134-008 R225401134-010
R225401134-012 R225401134-014 R225401134-016 R225401134-018 R225401134-020
R225401134-022 R225401134-024 R225401134-026 R225401134-028 R225401134-030
R225401134-032 R225401134-034 R225401134-036 R225401134-038 R225401136-000
R225401136-006 R225401136-008 R225401136-010 R225401136-012 R225401136-014
R225401136-016 R225401136-020 R225401136-022 R225401136-024 R225401137-000
R225401137-002 R225401137-004 R225401137-006 R225401137-008 R225401137-010
R225401137-012 R225401137-014 R225401137-016 R225401142-000 R225401142-002
R225401145-002 R225401145-004 R225401145-006 R225401145-008 R225401145-012
R225401145-014 R225401152-000 R225401152-002 R225401152-004 R225401152-006
R225401152-008 R225401153-000 R225401159-000 R225401160-000 R225401160-002
R225401172-000 R225401172-002 R225401172-004 R225401172-006 R225401172-008

R225401172-010 R225401172-012 R225401172-014 R225401172-016 R225401172-018
R225401175-000 R225401175-002 R225401176-000 R225401183-000 R225401183-002
R225401183-004 R225401183-006 R225401183-008 R225401195-000 R225401196-000
R225401196-002 R225401196-004 R225401196-006 R225401196-008 R225401196-010
R225401196-012 R225401196-014 R225401196-022 R225401196-034 R225401196-036
R225401196-038 R225401196-040 R225401196-044 R225401196-046 R225401196-048
R225401196-050 R225401196-052 R225401196-054 R225401196-056 R225401196-058
R225401196-060 R225401196-068 R225401199-000 R225401199-004 R225401199-008
R225401600-000 R225401600-002 R225401600-004 R225401603-000 R225401609-000
R225401611-006 R225401611-010 R225401611-012 R225401613-000 R225401614-000
R225401618-000 R225401618-002 R225401622-000 R225401622-002 R225401625-000
R225401646-002 R225401647-000 R225401648-000 R225401648-002 R225401648-004
R225401648-006 R225401648-008 R225401656-000 R225401662-000 R225401671-000
R225401685-000 R225401685-002 R225401688-000 R225401697-000 R225401803-000
R225401803-002 R225401808-000 R225401811-000 R225401814-000

148. Removal and Disassembly of the Door Assembly of the Washbasin Unit

A. General

A complete disassembly of the component is not necessary and not recommended.

Do not disassemble the component more than it is necessary for:

- Cleaning
- Visual Inspection
- Replacement of defective parts.

B. Job Set-up Information

(1) Not applicable

C. Procedure

WARNING: **BE CAREFUL WHEN YOU USE SOLVENTS/CLEANING AGENTS, SEALANTS AND OTHER MATERIALS. OBEY THE MATERIAL MANUFACTURER'S INSTRUCTIONS AND THE LOCAL REGULATIONS. MAKE SURE THAT THERE IS A GOOD FLOW OF AIR THROUGH THE WORK AREA. DO NOT BREATHE THE FUMES. DO NOT SMOKE. DO NOT USE THESE MATERIALS NEAR A FLAME, SPARKS OR SOURCES OF HEAT. USE PROTECTIVE CLOTHING, GOGGLES AND GLOVES. IF YOU GET ONE OF THESE MATERIALS ON YOUR SKIN OR IN YOUR EYES, FLUSH IT AWAY WITH A FLOW OF CLEAN WATER. IF YOU GET ONE OF THESE MATERIALS IN YOUR MOUTH, GET IMMEDIATE MEDICAL AID. IN GENERAL, THESE MATERIALS ARE POISONOUS, FLAMMABLE AND SKIN IRRITANTS.**

CAUTION: **DO ALL THE WORK ON A CLEAN, SOFT SURFACE TO PREVENT DAMAGE TO THE COMPONENTS.**

SUB TASK 25-41-51-000-118-A01

D2549010403200 D2549010404600 D2549010404800 D2549010405600
D2549010509400 D2549010510000 D2549010510200 D2549010510400
D2549010511400 D2549010512200 D2549010512600 D2549010513200
D2549010513400 D2549010600800 D2549010601000 D2549010601200
D2549010601600 D2549010601800 D2549010602000 D2549010602200
D2549010603200 D2549010604000 D2549010604600 D2549010604800
D2549010606400 D2549010607400 D2549010607800 D2549010609000
D2549010609400 D2549010610600 D2549010611600 D2549010612000
D2549020403000 D2549020412800 D2549020506200 D2549020506400
D2549020506600 D2549020506800 D2549020507200 D2549020507400
D2549020508200 D2549020512800 D2549020513600 D2549020605600
D2549020608200 D2549020609200 D2549020609400 D2549020610200
D2549020611400 D2549020612000 D2549020612200 D2549020612600
D2549020613600 D2549020700000 D2549020701000 D2549020702600
D2549020702800 D2549020703600 D2549020703800 D2549020704600
D2549020705200 D2549020705400 D2549020706800 D2549020707400
D2549020707600 D2549020708000 D2549020711200 D2549020712200
D2549020713200 D2549020801000 D2549030402000 D2549030402400
D2549030403400 D2549030403600 D2549030404400 D2549030404600
D2549030404800 D2549030405200 D2549030406400 D2549030408200
D2549030408600 D2549030409000 D2549030409400 D2549030411400
D2549030412200 D2549030412400 D2549030413400 D2549030414600
D2549030504600 D2549030505400 D2549030505600 D2549030506000
D2549030506600 D2549030507800 D2549030508400 D2549030509000
D2549030509400 D2549030510000 D2549030513000 D2549030513800
D2549030601400 D2549030601800 D2549030602200 D2549030602800
D2549030603800 D2549030604200 D2549030604400 D2549030604800
D2549030607000 D2549030607400 D2549030608200 D2549030608800
D2549030610600 D2549030611200 D2549030612800 D2549030613200
D2549030614600 D2549030700800 D2549030701800 D2549030704200

D2549030704400 D2549030704600 D2549030705600 D2549040501800 D2549040502000 R225401107-004 R225401115-000 R225401134-002 R225401134-004 R225401134-006 R225401134-008 R225401134-010 R225401134-012 R225401134-014 R225401134-016 R225401134-018 R225401134-020 R225401134-022 R225401134-024 R225401134-026 R225401134-028 R225401134-030 R225401134-032 R225401134-034 R225401134-036 R225401134-038 R225401160-000 R225401160-002 R225401183-000 R225401183-002 R225401183-004 R225401183-006 R225401183-008 R225401196-000 R225401196-002 R225401196-034 R225401196-046 R225401196-048 R225401603-000 R225401648-000 R225401648-002 R225401648-004 R225401648-006 R225401648-008 R225401685-000 R225401685-002 R225401803-000 R225401803-002 R225401808-000 R225401811-000 R225401814-000

1. Removal and Disassembly of the Door Assembly of the Washbasin Unit (16B-1)

NOTE: **See TABLE 3548 for the references for the replacement procedures of permanent installed parts.**

More data for bonded parts are given in column SEE REPAIR TASK. Use the data for the selection of the related repair solution.

IPL FIG. ITEM	COMPONENT PART NAME	IPL FIG. ITEM	REPLACEMENT PART NAME	SEE REPAIR TASK
16B-001 16B-010	Washbasin-Unit Door Assembly Washbasin-Unit Door Assembly	16B-070	Sliding Strip	Replacement of the Bonded Parts self adhesive

Table 3548
Reference list for the replacement of permanent installed parts

(a) Remove and disassemble the washbasin-unit door assembly 16B-010 as follows:

1 Remove the washbasin-unit door assembly 16B-010 and the attach pins 16B-020, 16B-030 from the mounting angle assemblies 16B-080, 16B-100.

2 Remove the attach pins 16B-020, 16B-030 from the washbasin-unit door assembly 16B-010.

3 Remove the screws 16B-050, the mounting plate 16B-040 and the latch assembly 16B-060 from the washbasin-unit door assembly 16B-010.

(b) Remove the screws 16B-120, the washers 16B-130 and the mounting angle assembly 16B-080.

(c) Disassemble the mounting angle assembly 16B-080 as follows:

1 Remove the bushing 16B-090 from the mounting angle 16B-085.

(d) Remove the screws 16B-120, the washers 16B-190, the nuts 16B-200 and the mounting angle assembly 16B-100.

(e) Disassemble the mounting angle assembly 16B-100 as follows:

1 Remove the bushing 16B-110 from the mounting angle 16B-105.

(f) Remove the screws 16B-120, the washers 16B-130, the angle 16B-150 and the sealing section 16B-160 from the lavatory structure.

(g) Remove the screws 16B-180, the washers 16B-140 and the lock insert or the catch 16B-170 from the angle 16B-150.

SUB TASK 25-41-51-000-118-B01

D2549010400000 D2549010400400 D2549010401800 D2549010402400
D2549010404000 D2549010404200 D2549010509600 D2549010509800
D2549010510800 D2549010511000 D2549010511600 D2549010511800
D2549010512000 D2549010512400 D2549010513000 D2549010513600
D2549010513800 D2549010514000 D2549010514200 D2549010514600
D2549010514800 D2549010600000 D2549010600200 D2549010600400
D2549010600600 D2549010601400 D2549010602400 D2549010602600
D2549010602800 D2549010603800 D2549010604200 D2549010604400
D2549010605000 D2549010605600 D2549010606000 D2549010606600
D2549010606800 D2549010607000 D2549010607200 D2549010608600
D2549010608800 D2549010609200 D2549010609600 D2549010610000
D2549010610200 D2549010611400 D2549010612200 D2549010612400
D2549010613000 D2549010613200 D2549010613600 D2549010614400
D2549010614800 D2549020301000 D2549020402200 D2549020402400
D2549020403400 D2549020404200 D2549020406600 D2549020406800
D2549020408600 D2549020408800 D2549020409000 D2549020410600
D2549020410800 D2549020411000 D2549020411800 D2549020412200
D2549020413000 D2549020413600 D2549020414000 D2549020505600
D2549020507000 D2549020507600 D2549020507800 D2549020508400
D2549020508600 D2549020508800 D2549020509000 D2549020509200
D2549020509600 D2549020510400 D2549020511200 D2549020512000
D2549020513200 D2549020513400 D2549020513800 D2549020514000
D2549020514800 D2549020604200 D2549020604400 D2549020605000
D2549020605200 D2549020605800 D2549020606000 D2549020607000
D2549020607800 D2549020608400 D2549020608600 D2549020608800

D2549020609800 D2549020610000 D2549020610400 D2549020610600
D2549020611000 D2549020611200 D2549020611600 D2549020611800
D2549020612400 D2549020612800 D2549020613000 D2549020614000
D2549020614400 D2549020614600 D2549020614800 D2549020700200
D2549020700800 D2549020701600 D2549020701800 D2549020702000
D2549020702400 D2549020703200 D2549020703400 D2549020704000
D2549020704200 D2549020704400 D2549020704800 D2549020705000
D2549020705600 D2549020706400 D2549020707000 D2549020707200
D2549020708200 D2549020708400 D2549020708600 D2549020709200
D2549020709400 D2549020709600 D2549020709800 D2549020710200
D2549020710400 D2549020710600 D2549020711000 D2549020711400
D2549020713400 D2549020713800 D2549020714000 D2549020714400
D2549020800000 D2549020800600 D2549020801400 D2549020801600
D2549020801800 D2549020802200 D2549020803600 D2549020804000
D2549020804200 D2549020804800 D2549020805000 D2549020805400
D2549020805800 D2549020806000 D2549020807000 D2549020808600
D2549020809800 D2549020810200 D2549020810600 D2549020811800
D2549020812600 D2549020813000 D2549020813800 D2549020814000
D2549030400000 D2549030400200 D2549030400400 D2549030401200
D2549030401400 D2549030401600 D2549030402600 D2549030402800
D2549030403000 D2549030403800 D2549030404000 D2549030404200
D2549030405600 D2549030405800 D2549030406000 D2549030406800
D2549030407000 D2549030407600 D2549030407800 D2549030408000
D2549030408400 D2549030409200 D2549030411200 D2549030411600
D2549030411800 D2549030412000 D2549030414000 D2549030414800
D2549030503800 D2549030504000 D2549030504200 D2549030504800
D2549030505200 D2549030505800 D2549030506400 D2549030506800
D2549030507000 D2549030507600 D2549030508000 D2549030508200
D2549030508800 D2549030509200 D2549030509600 D2549030509800
D2549030510400 D2549030510600 D2549030510800 D2549030511000
D2549030511200 D2549030511400 D2549030511600 D2549030511800
D2549030512000 D2549030512200 D2549030512400 D2549030512800
D2549030513200 D2549030513400 D2549030513600 D2549030514000
D2549030514400 D2549030514600 D2549030514800 D2549030600000
D2549030600200 D2549030600400 D2549030601200 D2549030602000
D2549030602400 D2549030603000 D2549030603200 D2549030603400
D2549030604600 D2549030605000 D2549030605200 D2549030605400
D2549030605600 D2549030606200 D2549030606400 D2549030606800
D2549030607200 D2549030607600 D2549030608000 D2549030608600
D2549030609000 D2549030609200 D2549030609800 D2549030610000
D2549030610400 D2549030611000 D2549030611400 D2549030611600
D2549030612000 D2549030612400 D2549030613600 D2549030613800
D2549030614000 D2549030614200 D2549030614400 D2549030614800
D2549030700000 D2549030700200 D2549030702200 D2549030703200
D2549030703600 D2549040500200R225401136-000 R225401136-006 R225401136-
008 R225401136-010 R225401136-012 R225401136-014 R225401136-016 R225401136-
020 R225401136-022 R225401136-024 R225401137-000 R225401137-002 R225401137-

004 R225401137-006 R225401137-008 R225401137-010 R225401137-012 R225401137-014 R225401137-016 R225401142-000 R225401142-002 R225401145-002 R225401145-004 R225401145-006 R225401145-008 R225401145-012 R225401145-014 R225401152-000 R225401152-002 R225401152-004 R225401152-006 R225401152-008 R225401153-000 R225401159-000 R225401172-000 R225401172-002 R225401172-004 R225401172-006 R225401172-008 R225401172-010 R225401172-012 R225401172-014 R225401172-016 R225401172-018 R225401175-000 R225401175-002 R225401176-000 R225401195-000 R225401196-004 R225401196-006 R225401196-008 R225401196-010 R225401196-012 R225401196-014 R225401196-022 R225401196-036 R225401196-038 R225401196-040 R225401196-044 R225401196-050 R225401196-052 R225401196-054 R225401196-056 R225401196-058 R225401196-060 R225401196-068 R225401199-000 R225401199-004 R225401199-008 R225401600-000 R225401600-002 R225401600-004 R225401609-000 R225401611-006 R225401611-010 R225401611-012 R225401613-000 R225401614-000 R225401618-000 R225401618-002 R225401622-000 R225401622-002 R225401625-000 R225401646-002 R225401647-000 R225401656-000 R225401662-000 R225401671-000 R225401688-000 R225401697-000

2. Removal and Disassembly of the Door Assembly of the Washbasin Unit (16B-1)

NOTE: **See TABLE 3549 for the references for the replacement procedures of permanent installed parts.**

More data for bonded parts are given in column SEE REPAIR TASK. Use the data for the selection of the related repair solution.

IPL FIG. ITEM	COMPONENT PART NAME	IPL FIG. ITEM	REPLACEMENT PART NAME	SEE REPAIR TASK
16B-001 16B-010	Washbasin-Unit Door Assembly Washbasin-Unit Door Assembly	16B-070	Sliding Strip	Replacement of the Bonded Parts self adhesive

Table 3549
Reference list for the replacement of permanent installed parts

(a) Remove and disassemble the washbasin-unit door assembly 16B-010 as follows:

1 Remove the washbasin-unit door assembly 16B-010 and the attach pins 16B-020, 16B-030 from the mounting angle assemblies 16B-080, 16B-100.

2 Remove the attach pins 16B-020, 16B-030 from the washbasin-unit door assembly 16B-010.

3 Remove the screws 16B-050 and the latch assembly 16B-060 from the washbasin-unit door assembly 16B-010.

(b) Remove the screws 16B-120, 16B-125, the washers 16B-130 and the mounting angle assembly 16B-080.

(c) Disassemble the mounting angle assembly 16B-080 as follows:

1 Remove the bushing 16B-090 from the mounting angle 16B-085.

(d) Remove the screws 16B-120, 16B-124, the washers 16B-190, the nuts 16B-200 and the mounting angle assembly 16B-100.

(e) Disassemble the mounting angle assembly 16B-100 as follows:

1 Remove the bushing 16B-110 from the mounting angle 16B-105.

(f) Remove the screws 16B-120, the washers 16B-130, the angle 16B-150 and the sealing section 16B-160 from the lavatory structure.

(g) Remove the screws 16B-180, the washers 16B-140 and the lock insert or the catch 16B-170 from the angle 16B-150.

TASK 25-41-51-000-813-D01

D2547160900200 D2547160900400 D2549010400200 D2549010400600 D2549010400800
D2549010401000 D2549010401400 D2549010402000 D2549010402800 D2549010403400
D2549010403800 D2549010404400 D2549010405000 D2549010405200 D2549010405400
D2549010405800 D2549010406200 D2549010407000 D2549010510600 D2549010514400
D2549010603000 D2549010603400 D2549010603600 D2549010605200 D2549010605800
D2549010607600 D2549010608200 D2549010608400 D2549010609800 D2549010610400
D2549010611000 D2549010611200 D2549010612600 D2549010613400 D2549010613800
D2549010614200 D2549010614600 D2549020300400 D2549020300800 D2549020301800
D2549020400200 D2549020400400 D2549020400600 D2549020400800 D2549020401000
D2549020402000 D2549020403200 D2549020403600 D2549020403800 D2549020404400
D2549020404600 D2549020405200 D2549020405400 D2549020405600 D2549020406000
D2549020406400 D2549020407400 D2549020408000 D2549020409200 D2549020409400
D2549020409600 D2549020410400 D2549020411400 D2549020412000 D2549020412400
D2549020413200 D2549020414600 D2549020502200 D2549020508000 D2549020509800
D2549020510000 D2549020510800 D2549020511000 D2549020511600 D2549020511800
D2549020512200 D2549020512400 D2549020512600 D2549020513000 D2549020514200
D2549020514400 D2549020514600 D2549020602200 D2549020604600 D2549020604800
D2549020605400 D2549020606800 D2549020607400 D2549020607600 D2549020609000
D2549020609600 D2549020610800 D2549020613200 D2549020613800 D2549020700400
D2549020700600 D2549020701200 D2549020701400 D2549020702200 D2549020705800
D2549020706000 D2549020706200 D2549020706600 D2549020707800 D2549020708800
D2549020709000 D2549020710000 D2549020710800 D2549020711600 D2549020712400
D2549020712800 D2549020713000 D2549020713600 D2549020714600 D2549020800200
D2549020800400 D2549020800800 D2549020801200 D2549020802000 D2549020802400
D2549020802600 D2549020803000 D2549020803200 D2549020803400 D2549020803800
D2549020804400 D2549020805600 D2549020806200 D2549020806400 D2549020806600
D2549020806800 D2549020807400 D2549020807600 D2549020807800 D2549020808400
D2549020808800 D2549020809000 D2549020809400 D2549020810400 D2549020811600
D2549020812000 D2549020812400 D2549020813200 D2549020813400 D2549020813600
D2549020814400 D2549020814600 D2549020814800 D2549030402200 D2549030405400
D2549030407200 D2549030410000 D2549030410600 D2549030414400 D2549030506200
D2549030507200 D2549030507400 D2549030508600 D2549030510200 D2549030514200
D2549030600600 D2549030600800 D2549030601000 D2549030601600 D2549030602600
D2549030603600 D2549030605800 D2549030606600 D2549030607800 D2549030611800
D2549030612200 D2549030612600 D2549030613400 R225401168-000 R225401168-002
R225401168-004 R225401168-006 R225401168-008 R225401168-010 R225401168-012
R225401168-014 R225401168-016 R225401168-018 R225401168-020 R225401168-022
R225401168-024 R225401168-026 R225401168-028 R225401192-000 R225401192-002
R225401199-006 R225401602-000 R225401605-000 R225401605-002 R225401619-000
R225401619-002 R225401629-000 R225401629-002 R225401639-000 R225401639-002
R225401643-000 R225401643-002 R225401643-004 R225401643-006 R225401643-008
R225401649-000 R225401658-000 R225401693-000

149. Removal and Disassembly of the Door Assembly of the Washbasin Unit

A. General

A complete disassembly of the component is not necessary and not recommended.

Do not disassemble the component more than it is necessary for:

- Cleaning
- Visual Inspection
- Replacement of defective parts.

B. Job Set-up Information

(1) Not applicable

C. Procedure

WARNING: **BE CAREFUL WHEN YOU USE SOLVENTS/CLEANING AGENTS, SEALANTS AND OTHER MATERIALS. OBEY THE MATERIAL MANUFACTURER'S INSTRUCTIONS AND THE LOCAL REGULATIONS. MAKE SURE THAT THERE IS A GOOD FLOW OF AIR THROUGH THE WORK AREA. DO NOT BREATHE THE FUMES. DO NOT SMOKE. DO NOT USE THESE MATERIALS NEAR A FLAME, SPARKS OR SOURCES OF HEAT. USE PROTECTIVE CLOTHING, GOGGLES AND GLOVES. IF YOU GET ONE OF THESE MATERIALS ON YOUR SKIN OR IN YOUR EYES, FLUSH IT AWAY WITH A FLOW OF CLEAN WATER. IF YOU GET ONE OF THESE MATERIALS IN YOUR MOUTH, GET IMMEDIATE MEDICAL AID. IN GENERAL, THESE MATERIALS ARE POISONOUS, FLAMMABLE AND SKIN IRRITANTS.**

CAUTION: **DO ALL THE WORK ON A CLEAN, SOFT SURFACE TO PREVENT DAMAGE TO THE COMPONENTS.**

SUB TASK 25-41-51-000-119-A01

1. Removal and Disassembly of the Door Assembly of the Washbasin Unit (16C-1)

NOTE: **See TABLE 3550 for the references for the replacement procedures of permanent installed parts.**

More data for bonded parts are given in column SEE REPAIR TASK. Use the data for the selection of the related repair solution.

IPL FIG. ITEM	COMPONENT PART NAME	IPL FIG. ITEM	REPLACEMENT PART NAME	SEE REPAIR TASK
16C-001 16C-010	Washbasin-Unit Door Assembly Washbasin-Unit Door Assembly	16C-060	Sliding Strip	Replacement of the Bonded Parts self adhesive

Table 3550
Reference list for the replacement of permanent installed parts

(a) Remove and disassemble the washbasin-unit door assembly 16C-010 as follows:

1 Remove the washbasin-unit door assembly 16C-010 and the attach pins 16C-020, 16C-030 from the mounting angle assemblies 16C-070, 16C-090.

2 Remove the attach pins 16C-020, 16C-030 from the washbasin-unit door assembly 16C-010.

3 Remove the screws 16C-040 and the latch assembly 16C-050 from the washbasin-unit door assembly 16C-010.

(b) Remove the screws 16C-110, the washers 16C-120 and the mounting angle assembly 16C-070.

(c) Disassemble the mounting angle assembly 16C-070 as follows:

1 Remove the bushing 16C-080 from the mounting angle 16C-075.

(d) Remove the screws 16C-110, the washers 16C-180, the nuts 16C-190 and the mounting angle assembly 16C-090.

(e) Disassemble the mounting angle assembly 16C-090 as follows:

1 Remove the bushing 16C-100 from the mounting angle 16C-095.

(f) Remove the screws 16C-110, the washers 16C-120, the angle 16C-140 and the sealing section 16C-150 from the lavatory structure.

(g) Remove the screws 16C-170, the washers 16C-130 and the catch 16C-160 from the angle 16C-140.

TASK 25-41-51-000-813-E01
D2549020401400 D2549020510600 D2549020802800 D2549020805200 D2549030410800 D2549030414200 D2549030701600 D2549030702000 D2549030703000 D2549030704000 R225401627-000

150. Removal and Disassembly of the Door Assembly of the Washbasin Unit

A. General

A complete disassembly of the component is not necessary and not recommended.

Do not disassemble the component more than it is necessary for:

- Cleaning
- Visual Inspection
- Replacement of defective parts.

B. Job Set-up Information

(1) Not applicable

C. Procedure

WARNING: BE CAREFUL WHEN YOU USE SOLVENTS/CLEANING AGENTS, SEALANTS AND OTHER MATERIALS. OBEY THE MATERIAL MANUFACTURER'S INSTRUCTIONS AND THE LOCAL REGULATIONS. MAKE SURE THAT THERE IS A GOOD FLOW OF AIR THROUGH THE WORK AREA. DO NOT BREATHE THE FUMES. DO NOT SMOKE. DO NOT USE THESE MATERIALS NEAR A FLAME, SPARKS OR SOURCES OF HEAT. USE PROTECTIVE CLOTHING, GOGGLES AND GLOVES. IF YOU GET ONE OF THESE MATERIALS ON YOUR SKIN OR IN YOUR EYES, FLUSH IT AWAY WITH A FLOW OF CLEAN WATER. IF YOU GET ONE OF THESE MATERIALS IN YOUR MOUTH, GET IMMEDIATE MEDICAL AID. IN GENERAL, THESE MATERIALS ARE POISONOUS, FLAMMABLE AND SKIN IRRITANTS.

CAUTION: DO ALL THE WORK ON A CLEAN, SOFT SURFACE TO PREVENT DAMAGE TO THE COMPONENTS.

SUB TASK 25-41-51-000-120-A01
1. Removal and Disassembly of the Door Assembly of the Washbasin Unit (16D-1)

NOTE: **See TABLE 3551 for the references for the replacement procedures of permanent installed parts.**

More data for bonded parts are given in column SEE REPAIR TASK. Use the data for the selection of the related repair solution.

IPL FIG. ITEM	COMPONENT PART NAME	IPL FIG. ITEM	REPLACEMENT PART NAME	SEE REPAIR TASK
16D-001 16D-010	Washbasin-Unit Door Assembly Washbasin-Unit Door Assembly	16D-060	Sliding Strip	Replacement of the Bonded Parts self adhesive

Table 3551
Reference list for the replacement of permanent installed parts

(a) Remove and disassemble the washbasin-unit door assembly 16D-010 as follows:

1 Remove the washbasin-unit door assembly 16D-010 and the attach pins 16D-020, 16D-030 from the mounting angle assemblies 16D-070, 16D-090.

2 Remove the attach pins 16D-020, 16D-030 from the washbasin-unit door assembly 16D-010.

3 Remove the screws 16D-040 and the latch assembly 16D-050 from the washbasin-unit door assembly 16D-010.

(b) Remove the screws 16D-110, the washers 16D-120 and the mounting angle assembly 16D-070.

(c) Disassemble the mounting angle assembly 16D-070 as follows:

1 Remove the bushing 16D-080 from the mounting angle 16D-075.

(d) Remove the screws 16D-110, the washers 16D-180, the nuts 16D-190 and the mounting angle assembly 16D-090.

(e) Disassemble the mounting angle assembly 16D-090 as follows:

1 Remove the bushing 16D-100 from the mounting angle 16D-095.

(f) Remove the screws 16D-110, the washers 16D-120, the angle 16D-140 and the sealing section 16D-150 from the lavatory structure.

(g) Remove the screws 16D-170, the washers 16D-130 and the catch 16D-160 from the angle 16D-140.

TASK 25-41-51-000-813-F01

D2549010401600 D2549010402200 D2549010402600 D2549010403000 D2549010403600
D2549010406000 D2549010406400 D2549010406800 D2549010610800 D2549010611800
D2549020300000 D2549020300600 D2549020301600 D2549020302000 D2549020302800
D2549020400000 D2549020401200 D2549020401600 D2549020402600 D2549020404000
D2549020404800 D2549020405000 D2549020405800 D2549020406200 D2549020407000
D2549020407200 D2549020407600 D2549020407800 D2549020408200 D2549020409800
D2549020410200 D2549020411200 D2549020411600 D2549020412600 D2549020413400
D2549020413800 D2549020414200 D2549020414800 D2549020807200 D2549020808200
D2549020809600 D2549020810000 D2549020810800 D2549020811200 D2549020811400
D2549020812200 D2549020812800 D2549020814200 D2549030400600 D2549030401000
D2549030401800 D2549030405000 D2549030406600 D2549030407400 D2549030409600
D2549030409800 D2549030410200 D2549030410400 D2549030412600 D2549030412800
D2549030413000 D2549030413200 D2549030413600 D2549030606000 D2549030608400
D2549030700400 D2549030700600 D2549030701000 D2549030701400 D2549030702400
D2549030702600 D2549030702800 D2549030703400 D2549030703800 D2549030704800
D2549030705200 D2549040500400 D2549040500600 D2549040500800 D2549040501000
D2549040501200 D2549040501400 D2549040501600 R225401136-004 R225401136-018
R225401145-010 R225401152-010 R225401196-016 R225401196-018 R225401196-020
R225401196-024 R225401196-042 R225401196-062 R225401196-064 R225401196-066
R225401196-070 R225401199-002 R225401199-010 R225401199-012 R225401611-000
R225401611-008 R225401611-014 R225401611-016 R225401611-018 R225401611-020
R225401624-000 R225401627-002 R225401627-004 R225401646-000 R225401656-002
R225401662-002 R225401671-002 R225401673-000 R225401673-002 R225401673-004
R225401673-006 R225401675-000 R225401676-000 R225401683-000 R225401689-004
R225401689-006 R225401691-000 R225401691-002 R225401697-002

151. Removal and Disassembly of the Door Assembly of the Washbasin Unit

A. General

A complete disassembly of the component is not necessary and not recommended.

Do not disassemble the component more than it is necessary for:

- Cleaning
- Visual Inspection
- Replacement of defective parts.

B. Job Set-up Information

(1) Not applicable

C. Procedure

WARNING: **BE CAREFUL WHEN YOU USE SOLVENTS/CLEANING AGENTS, SEALANTS AND OTHER MATERIALS. OBEY THE MATERIAL MANUFACTURER'S INSTRUCTIONS AND THE LOCAL REGULATIONS. MAKE SURE THAT THERE IS A GOOD FLOW OF AIR THROUGH THE WORK AREA. DO NOT BREATHE THE FUMES. DO NOT SMOKE. DO NOT USE THESE MATERIALS NEAR A FLAME, SPARKS OR SOURCES OF HEAT. USE PROTECTIVE CLOTHING, GOGGLES AND GLOVES. IF YOU GET ONE OF THESE MATERIALS ON YOUR SKIN OR IN YOUR EYES, FLUSH IT AWAY WITH A FLOW OF CLEAN WATER. IF YOU GET ONE OF THESE MATERIALS IN YOUR MOUTH, GET IMMEDIATE MEDICAL AID. IN GENERAL, THESE MATERIALS ARE POISONOUS, FLAMMABLE AND SKIN IRRITANTS.**

CAUTION: **DO ALL THE WORK ON A CLEAN, SOFT SURFACE TO PREVENT DAMAGE TO THE COMPONENTS.**

SUB TASK 25-41-51-000-121-A01

1. Removal and Disassembly of the Door Assembly of the Washbasin Unit (16E-1)

NOTE: **See TABLE 3552 for the references for the replacement procedures of permanent installed parts.**

More data for bonded parts are given in column SEE REPAIR TASK. Use the data for the selection of the related repair solution.

IPL FIG. ITEM	COMPONENT PART NAME	IPL FIG. ITEM	REPLACEMENT PART NAME	SEE REPAIR TASK
16E-001 16E-010	Washbasin-Unit Door Assembly Washbasin-Unit Door Assembly	16E-070	Sliding Strip	Replacement of the Bonded Parts self adhesive

Table 3552
Reference list for the replacement of permanent installed parts

(a) Remove and disassemble the washbasin-unit door assembly 16E-010 as follows:

1 Remove the washbasin-unit door assembly 16E-010 and the attach pins 16E-020, 16E-030 from the mounting angle assemblies 16E-080, 16E-100.

2 Remove the attach pins 16E-020, 16E-030 from the washbasin-unit door assembly 16E-010.

3 Remove the screws 16E-050 and the latch assembly 16E-060 from the washbasin-unit door assembly 16E-010.

(b) Remove the screws 16E-120, 16E-125, the washers 16E-130 and the mounting angle assembly 16E-080.

(c) Disassemble the mounting angle assembly 16E-080 as follows:

1 Remove the bushing 16E-090 from the mounting angle 16E-085.

(d) Remove the screws 16E-120, 16E-124, the washers 16E-190, the nuts 16E-200 and the mounting angle assembly 16E-100.

(e) Disassemble the mounting angle assembly 16E-100 as follows:

1 Remove the bushing 16E-110 from the mounting angle 16E-105.

(f) Remove the screws 16E-120, the washers 16E-130, the angle 16E-150 and the sealing section 16E-160 from the lavatory structure.

(g) Remove the screws 16E-210, the washers 16E-130, the nuts 16E-200, the angle 16E-150 and the sealing section 16E-160 from the lavatory structure.

(h) Remove the screws 16E-180, the washers 16E-140 and the catch 16E-170 from the angle 16E-150.

TASK 25-41-51-000-813-G01
D2549020712000 D2549020712600 D2549030610200 D2549030701200

152. Removal and Disassembly of the Door Assembly of the Washbasin Unit

A. General

A complete disassembly of the component is not necessary and not recommended.

Do not disassemble the component more than it is necessary for:

- Cleaning
- Visual Inspection
- Replacement of defective parts.

B. Job Set-up Information

(1) Not applicable

C. Procedure

WARNING: BE CAREFUL WHEN YOU USE SOLVENTS/CLEANING AGENTS, SEALANTS AND OTHER MATERIALS. OBEY THE MATERIAL MANUFACTURER'S INSTRUCTIONS AND THE LOCAL REGULATIONS. MAKE SURE THAT THERE IS A GOOD FLOW OF AIR THROUGH THE WORK AREA. DO NOT BREATHE THE FUMES. DO NOT SMOKE. DO NOT USE THESE MATERIALS NEAR A FLAME, SPARKS OR SOURCES OF HEAT. USE PROTECTIVE CLOTHING, GOGGLES AND GLOVES. IF YOU GET ONE OF THESE MATERIALS ON YOUR SKIN OR IN YOUR EYES, FLUSH IT AWAY WITH A FLOW OF CLEAN WATER. IF YOU GET ONE OF THESE MATERIALS IN YOUR MOUTH, GET IMMEDIATE MEDICAL AID. IN GENERAL, THESE MATERIALS ARE POISONOUS, FLAMMABLE AND SKIN IRRITANTS.

CAUTION: DO ALL THE WORK ON A CLEAN, SOFT SURFACE TO PREVENT DAMAGE TO THE COMPONENTS.

SUB TASK 25-41-51-000-122-A01

1. Removal and Disassembly of the Door Assembly of the Washbasin Unit (16F-1)

NOTE: **See TABLE 3553 for the references for the replacement procedures of permanent installed parts.**

More data for bonded parts are given in column SEE REPAIR TASK. Use the data for the selection of the related repair solution.

IPL FIG. ITEM	COMPONENT PART NAME	IPL FIG. ITEM	REPLACEMENT PART NAME	SEE REPAIR TASK
16F-001 16F-010	Washbasin-Unit Door Assembly Washbasin-Unit Door Assembly	16F-040	Sliding Strip	Replacement of the Bonded Parts self adhesive

Table 3553
Reference list for the replacement of permanent installed parts

(a) Remove and disassemble the washbasin-unit door assembly 16F-010 as follows:

1 Remove the washbasin-unit door assembly 16F-010 and the attach pins 16F-020, 16F-030 from the mounting angle assembly 16F-070 and from the mounting angle 16F-100.

2 Remove the attach pins 16F-020, 16F-030 from the washbasin-unit door assembly 16F-010.

3 Remove the screws 16F-060 and the latch assembly 16F-050 from the washbasin-unit door assembly 16F-010.

(b) Remove the screws 16F-210, the washers 16F-180 and the mounting angle assembly 16F-070.

(c) Disassemble the mounting angle assembly 16F-070 as follows:

1 Remove the bushing 16F-090 from the mounting angle 16F-080.

(d) Remove the screws 16F-220, the washers 16F-180 and the mounting angle 16F-100.

(e) Remove the screws 16F-140, the washers 16F-170, the angle 16F-110 and the sealing section 16F-120 from the lavatory structure.

(f) Remove the screws 16F-200, the washers 16F-170, the nuts 16F-190, the angle 16F-110 and the sealing section 16F-120 from the lavatory structure.

(g) Remove the screws 16F-150, the washers 16F-160 and the catch 16F-130 from the angle 16F-110.

TASK 25-41-51-000-814-A01
D2549010500000 D2549010500800 D2549010501200 D2549010502600 D2549010503800 D2549010506000 D2549010507600

153. Removal and Disassembly of the Panel Assembly of the Washbasin Unit

A. General

A complete disassembly of the component is not necessary and not recommended.

Do not disassemble the component more than it is necessary for:

- Cleaning
- Visual Inspection
- Replacement of defective parts.

B. Job Set-up Information

(1) Not applicable

C. Procedure

WARNING: BE CAREFUL WHEN YOU USE SOLVENTS/CLEANING AGENTS, SEALANTS AND OTHER MATERIALS. OBEY THE MATERIAL MANUFACTURER'S INSTRUCTIONS AND THE LOCAL REGULATIONS. MAKE SURE THAT THERE IS A GOOD FLOW OF AIR THROUGH THE WORK AREA. DO NOT BREATHE THE FUMES. DO NOT SMOKE. DO NOT USE THESE MATERIALS NEAR A FLAME, SPARKS OR SOURCES OF HEAT. USE PROTECTIVE CLOTHING, GOGGLES AND GLOVES. IF YOU GET ONE OF THESE MATERIALS ON YOUR SKIN OR IN YOUR EYES, FLUSH IT AWAY WITH A FLOW OF CLEAN WATER. IF YOU GET ONE OF THESE MATERIALS IN YOUR MOUTH, GET IMMEDIATE MEDICAL AID. IN GENERAL, THESE MATERIALS ARE POISONOUS, FLAMMABLE AND SKIN IRRITANTS.

CAUTION: DO ALL THE WORK ON A CLEAN, SOFT SURFACE TO PREVENT DAMAGE TO THE COMPONENTS.

SUB TASK 25-41-51-000-123-A01
1. Removal and Disassembly of the Panel Assembly of the Washbasin Unit (17-1)

NOTE: **See TABLE 3554 for the references for the replacement procedures of permanent installed parts.**

IPL FIG. ITEM	COMPONENT PART NAME	IPL FIG. ITEM	REPLACEMENT PART NAME	SEE REPAIR TASK
17-001 17-060	Washbasin Unit Panel Assembly Washbasin Unit Bracket	17-100	Nut	Replacement of the Riveted Parts
17-001 17-150	Washbasin Unit Panel Assembly Roll Holder	17-160	Nut	Replacement of the Riveted Parts
17-001	Washbasin Unit Panel Assembly	17-200	Protective Plate Assembly	Replacement of the Riveted Parts

Table 3554
Reference list for the replacement of permanent installed parts

(a) Remove the screws 17-190 and the paper roll holder 17-170 from the roll holders 17-150.

(b) Disassemble the paper roll holder 17-170 as follows:

1 Remove the cable tie 17-185 and the rollers 17-180.

(c) Remove the screws 17-210, the washers 17-120 and the roll holders 17-150 from the washbasin-unit panel assembly 17-010.

(d) Remove the screws 17-110, the washers 17-120, the spacers 17-130 and the washbasin-unit panel assembly 17-010 from the washbasin unit console 17-020.

(e) Remove the screws 17-210, the washers 17-120 and the washbasin-unit panel assembly 17-010 from the washbasin unit bracket 17-060.

(f) Remove the ground cables from the washbasin unit console 17-020 and from the washbasin unit bracket 17-060.

(g) Remove the screws 17-140, the washers 17-120, the washbasin unit console 17-020 and the washbasin unit bracket 17-060 from the lavatory structure.

(h) Disassemble the washbasin unit console 17-020 as follows:

1 Remove the screws 17-030, the washers 17-040 and the adapter plate 17-050.

(i) Disassemble the washbasin unit bracket 17-060 as follows:

1 Remove the screws 17-070, the washers 17-080 and the washbasin unit bracket 17-090.

TASK 25-41-51-000-814-B01

D2549010500400 D2549010500600 D2549010501000 D2549010501400 D2549010501600
D2549010501800 D2549010502000 D2549010502200 D2549010502400 D2549010502800
D2549010503200 D2549010503400 D2549010503600 D2549010504200 D2549010504400
D2549010504600 D2549010504800 D2549010505000 D2549010505200 D2549010505400
D2549010505600 D2549010505800 D2549010506200 D2549010506400 D2549010507000
D2549010507200 D2549010507400 D2549010507800 D2549010508200 D2549010508400
D2549010508600 D2549010508800 D2549010509200 D2549010511200 D2549020500000
D2549020500200 D2549020500400 D2549020500600 D2549020500800 D2549020501000
D2549020501200 D2549020501400 D2549020501600 D2549020501800 D2549020502000
D2549020502400 D2549020502600 D2549020502800 D2549020503000 D2549020503200
D2549020503400 D2549020503600 D2549020503800 D2549020504200 D2549020504400
D2549020504600 D2549020504800 D2549020505000 D2549020505200 D2549020505400
D2549020505800 D2549020506000 D2549020600000 D2549020600200 D2549020600400
D2549020600800 D2549020601000 D2549020601200 D2549020601400 D2549020601600
D2549020601800 D2549020602000 D2549020602400 D2549020603000 D2549020603200
D2549020603600 D2549020604000 D2549020606400 D2549030500200 D2549030500400
D2549030501000 D2549030501200 D2549030501600 D2549030501800 D2549030502200
D2549030502400 D2549030502600 D2549030503200 D2549030503400 D2549030503600
R225401107-000 R225401107-002 R225401115-002 R225401128-000 R225401133-000
R225401139-000 R225401145-000 R225401146-000 R225401146-002 R225401188-000
R225401188-002 R225401188-006

154. Removal and Disassembly of the Panel Assembly of the Washbasin Unit

A. General

A complete disassembly of the component is not necessary and not recommended.

Do not disassemble the component more than it is necessary for:

- Cleaning
- Visual Inspection
- Replacement of defective parts.

B. Job Set-up Information

(1) Not applicable

C. Procedure

WARNING: **BE CAREFUL WHEN YOU USE SOLVENTS/CLEANING AGENTS, SEALANTS AND OTHER MATERIALS. OBEY THE MATERIAL MANUFACTURER'S INSTRUCTIONS AND THE LOCAL REGULATIONS. MAKE SURE THAT THERE IS A GOOD FLOW OF AIR THROUGH THE WORK AREA. DO NOT BREATHE THE FUMES. DO NOT SMOKE. DO NOT USE THESE MATERIALS NEAR A FLAME, SPARKS OR SOURCES OF HEAT. USE PROTECTIVE CLOTHING, GOGGLES AND GLOVES. IF YOU GET ONE OF THESE MATERIALS ON YOUR SKIN OR IN YOUR EYES, FLUSH IT AWAY WITH A FLOW OF CLEAN WATER. IF YOU GET ONE OF THESE MATERIALS IN YOUR MOUTH, GET IMMEDIATE MEDICAL AID. IN GENERAL, THESE MATERIALS ARE POISONOUS, FLAMMABLE AND SKIN IRRITANTS.**

CAUTION: **DO ALL THE WORK ON A CLEAN, SOFT SURFACE TO PREVENT DAMAGE TO THE COMPONENTS.**

SUB TASK 25-41-51-000-124-A01

1. Removal and Disassembly of the Panel Assembly of the Washbasin Unit (17A-1)

NOTE: **See TABLE 3555 for the references for the replacement procedures of permanent installed parts.**

IPL FIG. ITEM	COMPONENT PART NAME	IPL FIG. ITEM	REPLACEMENT PART NAME	SEE REPAIR TASK
17A-001 17A-060	Washbasin Unit Panel Assembly Washbasin Unit Bracket	17A-100	Nut	Replacement of the Riveted Parts
17A-001 17A-140	Washbasin Unit Panel Assembly Roll Holder	17A-150	Nut	Replacement of the Riveted Parts
17A-001	Washbasin Unit Panel Assembly	17A-190	Protective Plate Assembly	Replacement of the Riveted Parts

Table 3555
Reference list for the replacement of permanent installed parts

(a) Remove the screws 17A-180 and the paper roll holder 17A-160 from the roll holders 17A-140.

(b) Disassemble the paper roll holder 17A-160 as follows:

1 Remove the cable tie 17A-175 and the rollers 17A-170.

(c) Remove the screws 17A-200, the washers 17A-120 and the roll holders 17A-140 from the washbasin-unit panel assembly 17A-010.

(d) Remove the screws 17A-200, 17A-205, the washers 17A-120 and the washbasin-unit panel assembly 17A-010 from the washbasin unit bracket 17A-020.

(e) Remove the screws 17A-200, the washers 17A-120 and the washbasin-unit panel assembly 17A-010 from the washbasin unit bracket 17A-060.

(f) Remove the ground cables from the washbasin unit brackets 17A-020, 17A-060.

(g) Remove the screws 17A-106, 17A-107, 17A-130, the washers 17A-108, the spacers 17A-105, 17A-120, the nuts 17A-109, 17A-110 and the washbasin unit brackets 17A-020, 17A-060 from the lavatory structure.

(h) Disassemble the washbasin unit bracket 17A-020 as follows:

1 Remove the screws 17A-030, 17A-035, the washers 17A-040, the nuts 17A-045, 17A-046, the spacers 17A-047 and the adapter plate 17A-050.

(i) Disassemble the washbasin unit bracket 17A-060 as follows:

1 Remove the screws 17A-070, the washers 17A-080 and the washbasin unit bracket 17A-090.

TASK 25-41-51-000-814-C01
D2549010506800 D2549010508000 D2549020504000 D2549020602600 D2549020602800 D2549020603400 D2549020603800 D2549020606600 D2549020607200 D2549030500600 D2549030500800 D2549030501400 D2549030502000 D2549030502800 D2549030503000 R225401134-000 R225401188-004

155. Removal and Disassembly of the Panel Assembly of the Washbasin Unit

A. General

A complete disassembly of the component is not necessary and not recommended.

Do not disassemble the component more than it is necessary for:

- Cleaning
- Visual Inspection
- Replacement of defective parts.

B. Job Set-up Information

(1) Not applicable

C. Procedure

WARNING: BE CAREFUL WHEN YOU USE SOLVENTS/CLEANING AGENTS, SEALANTS AND OTHER MATERIALS. OBEY THE MATERIAL MANUFACTURER'S INSTRUCTIONS AND THE LOCAL REGULATIONS. MAKE SURE THAT THERE IS A GOOD FLOW OF AIR THROUGH THE WORK AREA. DO NOT BREATHE THE FUMES. DO NOT SMOKE. DO NOT USE THESE MATERIALS NEAR A FLAME, SPARKS OR SOURCES OF HEAT. USE PROTECTIVE CLOTHING, GOGGLES AND GLOVES. IF YOU GET ONE OF THESE MATERIALS ON YOUR SKIN OR IN YOUR EYES, FLUSH IT AWAY WITH A FLOW OF CLEAN WATER. IF YOU GET ONE OF THESE MATERIALS IN YOUR MOUTH, GET IMMEDIATE MEDICAL AID. IN GENERAL, THESE MATERIALS ARE POISONOUS, FLAMMABLE AND SKIN IRRITANTS.

CAUTION: DO ALL THE WORK ON A CLEAN, SOFT SURFACE TO PREVENT DAMAGE TO THE COMPONENTS.

SUB TASK 25-41-51-000-125-A01
D2549010506800 D2549020504000 D2549020602600 D2549020602800 D2549020603400 D2549020603800 D2549020606600 D2549020607200

D2549030500600 D2549030500800 D2549030501400 D2549030502000
D2549030502800 D2549030503000 R225401134-000 R225401188-004

1. Removal and Disassembly of the Panel Assembly of the Washbasin Unit (17B-1)

NOTE: **See TABLE 3556 for the references for the replacement procedures of permanent installed parts.**

IPL FIG. ITEM	COMPONENT PART NAME	IPL FIG. ITEM	REPLACEMENT PART NAME	SEE REPAIR TASK
17B-001 17B-060	Washbasin Unit Panel Assembly Washbasin Unit Bracket	17B-100	Nut	Replacement of the Riveted Parts
17B-001 17B-140	Washbasin Unit Panel Assembly Roll Holder	17B-150	Nut	Replacement of the Riveted Parts
17B-001	Washbasin Unit Panel Assembly	17B-200	Protective Plate Assembly	Replacement of the Riveted Parts

Table 3556
Reference list for the replacement of permanent installed parts

(a) Remove the screws 17B-190 and the paper roll holder 17B-160 from the roll holders 17B-140.

(b) Disassemble the paper roll holder 17B-160 as follows:

1 Remove the cable tie 17B-180 and the rollers 17B-170.

(c) Remove the screws 17B-110, the washers 17B-120 and the roll holders 17B-140 from the washbasin-unit panel assembly 17B-010.

(d) Remove the screws 17B-110, the washers 17B-120 and the washbasin-unit panel assembly 17B-010 from the washbasin unit bracket 17B-020.

(e) Remove the screws 17B-110, the washers 17B-120 and the washbasin-unit panel assembly 17B-010 from the washbasin unit bracket 17B-060.

(f) Remove the ground cables from the washbasin unit brackets 17B-020, 17B-060.

(g) Remove the screws 17B-130, the washers 17B-120 and the washbasin unit brackets 17B-020, 17B-060 from the lavatory structure.

(h) Disassemble the washbasin unit bracket 17B-020 as follows:

1 Remove the screws 17B-030, the washers 17B-040 and the adapter plate 17B-050.

(i) Disassemble the washbasin unit bracket 17B-060 as follows:

1 Remove the screws 17B-070, the washers 17B-080 and the washbasin unit bracket 17B-090.

SUB TASK 25-41-51-000-125-B01
D2549010508000

2. Removal and Disassembly of the Panel Assembly of the Washbasin Unit (17B-1)

NOTE: **See TABLE 3557 for the references for the replacement procedures of permanent installed parts.**

IPL FIG. ITEM	COMPONENT PART NAME	IPL FIG. ITEM	REPLACEMENT PART NAME	SEE REPAIR TASK
17B-001 17B-140	Washbasin Unit Panel Assembly Roll Holder	17B-150	Nut	Replacement of the Riveted Parts
17B-001	Washbasin Unit Panel Assembly	17B-200	Protective Plate Assembly	Replacement of the Riveted Parts

Table 3557
Reference list for the replacement of permanent installed parts

(a) Remove the screws 17B-190 and the paper roll holder 17B-160 from the roll holders 17B-140.

(b) Disassemble the paper roll holder 17B-160 as follows:

1 Remove the cable tie 17B-180 and the rollers 17B-170.

(c) Remove the screws 17B-110, the washers 17B-120 and the roll holders 17B-140 from the washbasin-unit panel assembly 17B-010.

(d) Remove the screws 17B-110, the washers 17B-120 and the washbasin-unit panel assembly 17B-010 from the washbasin unit bracket 17B-020.

(e) Remove the screws 17B-110, the washers 17B-120 and the washbasin-unit panel assembly 17B-010 from the washbasin unit bracket 17B-060.

(f) Remove the screws 17B-104, the washers 17B-106, the nuts 17B-108 and the angle 17B-102 from the washbasin unit bracket 17B-060.

(g) Remove the ground cables from the washbasin unit brackets 17B-020, 17B-060.

(h) Remove the screws 17B-130, the washers 17B-120 and the washbasin unit brackets 17B-020, 17B-060 from the lavatory structure.

(i) Disassemble the washbasin unit bracket 17B-020 as follows:

1 Remove the screws 17B-030, the washers 17B-040 and the adapter plate 17B-050.

TASK 25-41-51-000-814-D01

D2547160900200 D2547160900400 D2549010400000 D2549010400400 D2549010400800
D2549010401600 D2549010401800 D2549010402000 D2549010402200 D2549010402400
D2549010402600 D2549010402800 D2549010403000 D2549010403600 D2549010404200
D2549010404400 D2549010405200 D2549010405400 D2549010406000 D2549010406200
D2549010406400 D2549010406800 D2549010509000 D2549010509400 D2549010509600
D2549010509800 D2549010510000 D2549010510200 D2549010510400 D2549010510600
D2549010510800 D2549010511000 D2549010511400 D2549010511600 D2549010511800
D2549010512000 D2549010512200 D2549010512400 D2549010512600 D2549010513000
D2549010513200 D2549010513400 D2549010513600 D2549010513800 D2549010514000
D2549010514200 D2549010514600 D2549010514800 D2549010600000 D2549010600200
D2549010600400 D2549010600600 D2549010600800 D2549010601000 D2549010601600
D2549010601800 D2549010602000 D2549010602200 D2549010602400 D2549010602600
D2549010602800 D2549010603000 D2549010603400 D2549010603800 D2549010604000
D2549010604200 D2549010604400 D2549010604600 D2549010605000 D2549010605200
D2549010605600 D2549010605800 D2549010606000 D2549010606200 D2549010606600
D2549010606800 D2549010607000 D2549010607200 D2549010607400 D2549010607600
D2549010608200 D2549010608400 D2549010608600 D2549010608800 D2549010609000
D2549010609200 D2549010609600 D2549010610000 D2549010610200 D2549010610400
D2549010610800 D2549010611200 D2549010611400 D2549010611600 D2549010611800
D2549010612000 D2549010612200 D2549010612400 D2549010613000 D2549010613200
D2549010613600 D2549010613800 D2549010614800 D2549020300000 D2549020300600
D2549020300800 D2549020301000 D2549020301800 D2549020302000 D2549020400000
D2549020400400 D2549020400600 D2549020401200 D2549020401400 D2549020401600
D2549020402000 D2549020402400 D2549020402600 D2549020403000 D2549020403400
D2549020403600 D2549020403800 D2549020404000 D2549020404200 D2549020404600
D2549020404800 D2549020405000 D2549020405200 D2549020405400 D2549020405800
D2549020406000 D2549020406200 D2549020406600 D2549020406800 D2549020407000
D2549020407600 D2549020407800 D2549020408200 D2549020408600 D2549020408800
D2549020409000 D2549020409600 D2549020409800 D2549020410200 D2549020410600
D2549020410800 D2549020411000 D2549020411200 D2549020411400 D2549020411600
D2549020411800 D2549020412600 D2549020413000 D2549020413400 D2549020413600
D2549020413800 D2549020414000 D2549020414200 D2549020414800 D2549020502200
D2549020505600 D2549020506200 D2549020506400 D2549020506600 D2549020506800
D2549020507000 D2549020507200 D2549020507400 D2549020507600 D2549020507800
D2549020508000 D2549020508200 D2549020508400 D2549020508600 D2549020508800
D2549020509000 D2549020509200 D2549020509600 D2549020509800 D2549020510000
D2549020510800 D2549020511000 D2549020511200 D2549020511600 D2549020511800
D2549020512000 D2549020512600 D2549020512800 D2549020513200 D2549020513400
D2549020513600 D2549020513800 D2549020514000 D2549020514200 D2549020514400
D2549020514600 D2549020514800 D2549020602200 D2549020604200 D2549020604400
D2549020604800 D2549020605000 D2549020605200 D2549020605600 D2549020605800
D2549020606000 D2549020606800 D2549020607000 D2549020607400 D2549020607600
D2549020607800 D2549020608200 D2549020608400 D2549020608600 D2549020608800
D2549020609000 D2549020609200 D2549020609400 D2549020609600 D2549020609800
D2549020610000 D2549020610200 D2549020610400 D2549020610600 D2549020611000
D2549020611200 D2549020611400 D2549020611600 D2549020611800 D2549020612000

D2549020612200 D2549020612400 D2549020612600 D2549020612800 D2549020613000
D2549020613200 D2549020613600 D2549020613800 D2549020614000 D2549020614400
D2549020614600 D2549020614800 D2549020700000 D2549020700200 D2549020700400
D2549020700600 D2549020700800 D2549020701000 D2549020701200 D2549020701400
D2549020701600 D2549020701800 D2549020702000 D2549020702400 D2549020702600
D2549020702800 D2549020703200 D2549020703400 D2549020703600 D2549020703800
D2549020704000 D2549020704200 D2549020704400 D2549020704600 D2549020704800
D2549020705000 D2549020705200 D2549020705400 D2549020705600 D2549020706000
D2549020706200 D2549020706400 D2549020706600 D2549020706800 D2549020707000
D2549020707200 D2549020707400 D2549020707600 D2549020707800 D2549020708000
D2549020708200 D2549020708400 D2549020708600 D2549020708800 D2549020709000
D2549020709200 D2549020709400 D2549020709600 D2549020709800 D2549020710200
D2549020710400 D2549020710600 D2549020710800 D2549020711000 D2549020711200
D2549020711400 D2549020711600 D2549020712200 D2549020713200 D2549020713400
D2549020713600 D2549020714000 D2549020714400 D2549020714600 D2549020800000
D2549020800200 D2549020800400 D2549020800600 D2549020801000 D2549020801400
D2549020801600 D2549020801800 D2549020802000 D2549020802200 D2549020802600
D2549020802800 D2549020803000 D2549020803200 D2549020803400 D2549020803600
D2549020804000 D2549020804200 D2549020804400 D2549020804800 D2549020805000
D2549020805600 D2549020805800 D2549020806000 D2549020806600 D2549020807000
D2549020807200 D2549020807600 D2549020807800 D2549020808200 D2549020808400
D2549020808600 D2549020809000 D2549020809600 D2549020809800 D2549020810000
D2549020810200 D2549020810400 D2549020810600 D2549020810800 D2549020811200
D2549020811400 D2549020811800 D2549020812000 D2549020812200 D2549020812600
D2549020812800 D2549020813000 D2549020813600 D2549020813800 D2549020814000
D2549020814200 D2549020814600 D2549030400000 D2549030400200 D2549030400400
D2549030400600 D2549030401000 D2549030401200 D2549030401400 D2549030401600
D2549030401800 D2549030402000 D2549030402400 D2549030402600 D2549030402800
D2549030403000 D2549030403400 D2549030403600 D2549030403800 D2549030404200
D2549030404400 D2549030404600 D2549030404800 D2549030405000 D2549030405200
D2549030405600 D2549030405800 D2549030406000 D2549030406400 D2549030406600
D2549030406800 D2549030407000 D2549030407400 D2549030407600 D2549030407800
D2549030408000 D2549030408200 D2549030408400 D2549030408600 D2549030409000
D2549030409200 D2549030409400 D2549030409800 D2549030410000 D2549030410200
D2549030410400 D2549030411200 D2549030411400 D2549030411600 D2549030411800
D2549030412200 D2549030412400 D2549030412600 D2549030412800 D2549030413000
D2549030413200 D2549030413600 D2549030414400 D2549030414800 D2549030503800
D2549030504000 D2549030504200 D2549030504600 D2549030504800 D2549030505200
D2549030505400 D2549030505600 D2549030505800 D2549030506000 D2549030506200
D2549030506400 D2549030506600 D2549030506800 D2549030507000 D2549030507600
D2549030507800 D2549030508000 D2549030508200 D2549030508400 D2549030508800
D2549030509000 D2549030509200 D2549030509400 D2549030509600 D2549030509800
D2549030510000 D2549030510400 D2549030510600 D2549030510800 D2549030511200
D2549030511400 D2549030511600 D2549030511800 D2549030512200 D2549030512400
D2549030512800 D2549030513000 D2549030513200 D2549030513400 D2549030513600
D2549030513800 D2549030514000 D2549030514200 D2549030514400 D2549030514600
D2549030600000 D2549030600200 D2549030600400 D2549030600600 D2549030601000

D2549030601200 D2549030601400 D2549030601800 D2549030602000 D2549030602200
D2549030602400 D2549030602600 D2549030602800 D2549030603000 D2549030603200
D2549030603400 D2549030603800 D2549030604200 D2549030604400 D2549030604600
D2549030604800 D2549030605000 D2549030605200 D2549030605400 D2549030605600
D2549030605800 D2549030606000 D2549030606200 D2549030606400 D2549030606600
D2549030606800 D2549030607000 D2549030607200 D2549030607400 D2549030607600
D2549030608000 D2549030608200 D2549030608400 D2549030608600 D2549030608800
D2549030609000 D2549030609200 D2549030609800 D2549030610000 D2549030610400
D2549030610600 D2549030611000 D2549030611200 D2549030611400 D2549030611600
D2549030611800 D2549030612000 D2549030612200 D2549030612400 D2549030612800
D2549030613200 D2549030613400 D2549030613800 D2549030614000 D2549030614200
D2549030614400 D2549030614600 D2549030614800 D2549030700000 D2549030700200
D2549030700400 D2549030700800 D2549030701000 D2549030701400 D2549030702200
D2549030702400 D2549030702600 D2549030702800 D2549030703200 D2549030703400
D2549030703600 D2549030703800 D2549030704200 D2549030704600 D2549030705200
D2549040500200 D2549040500400 D2549040500600 D2549040500800 D2549040501000
D2549040501200 D2549040501400 D2549040501600 D2549040501800 D2549040502000
R225401107-004 R225401115-000 R225401134-002 R225401134-004 R225401134-006
R225401134-008 R225401134-010 R225401134-012 R225401134-014 R225401134-016
R225401134-018 R225401134-020 R225401134-022 R225401134-024 R225401134-026
R225401134-028 R225401134-030 R225401134-032 R225401134-034 R225401134-036
R225401134-038 R225401136-000 R225401136-004 R225401136-006 R225401136-008
R225401136-010 R225401136-012 R225401136-014 R225401136-016 R225401136-018
R225401136-020 R225401136-022 R225401136-024 R225401137-000 R225401137-002
R225401137-004 R225401137-006 R225401137-008 R225401137-010 R225401137-012
R225401137-014 R225401137-016 R225401142-000 R225401142-002 R225401145-002
R225401145-004 R225401145-006 R225401145-008 R225401145-010 R225401145-012
R225401145-014 R225401152-000 R225401152-002 R225401152-004 R225401152-006
R225401152-008 R225401152-010 R225401153-000 R225401159-000 R225401160-000
R225401160-002 R225401172-000 R225401172-002 R225401172-004 R225401172-006
R225401172-008 R225401172-010 R225401172-012 R225401172-014 R225401172-016
R225401172-018 R225401175-000 R225401175-002 R225401176-000 R225401192-000
R225401192-002 R225401195-000 R225401196-000 R225401196-002 R225401196-004
R225401196-006 R225401196-008 R225401196-010 R225401196-012 R225401196-014
R225401196-016 R225401196-018 R225401196-020 R225401196-022 R225401196-034
R225401196-036 R225401196-038 R225401196-040 R225401196-042 R225401196-044
R225401196-046 R225401196-048 R225401196-050 R225401196-052 R225401196-054
R225401196-056 R225401196-058 R225401196-060 R225401196-062 R225401196-064
R225401196-066 R225401196-068 R225401199-000 R225401199-002 R225401199-004
R225401199-006 R225401199-008 R225401199-010 R225401199-012 R225401600-000
R225401600-002 R225401600-004 R225401602-000 R225401605-000 R225401605-002
R225401609-000 R225401611-000 R225401611-006 R225401611-008 R225401611-010
R225401611-012 R225401611-014 R225401611-016 R225401611-018 R225401611-020
R225401613-000 R225401614-000 R225401618-000 R225401618-002 R225401619-000
R225401619-002 R225401622-000 R225401622-002 R225401624-000 R225401625-000
R225401627-000 R225401627-002 R225401627-004 R225401629-000 R225401629-002
R225401639-000 R225401639-002 R225401643-000 R225401643-002 R225401643-004

R225401643-006 R225401643-008 R225401646-000 R225401646-002 R225401647-000 R225401648-000 R225401648-002 R225401648-004 R225401648-006 R225401648-008 R225401656-000 R225401656-002 R225401662-000 R225401662-002 R225401673-000 R225401673-002 R225401673-004 R225401673-006 R225401675-000 R225401676-000 R225401683-000 R225401688-000 R225401689-004 R225401689-006 R225401691-000 R225401691-002 R225401693-000 R225401697-000 R225401697-002 R225401803-000 R225401803-002

156. Removal and Disassembly of the Panel Assembly of the Washbasin Unit

A. General

A complete disassembly of the component is not necessary and not recommended.

Do not disassemble the component more than it is necessary for:

- Cleaning
- Visual Inspection
- Replacement of defective parts.

B. Procedure

WARNING: **BE CAREFUL WHEN YOU USE SOLVENTS/CLEANING AGENTS, SEALANTS AND OTHER MATERIALS. OBEY THE MATERIAL MANUFACTURER'S INSTRUCTIONS AND THE LOCAL REGULATIONS. MAKE SURE THAT THERE IS A GOOD FLOW OF AIR THROUGH THE WORK AREA. DO NOT BREATHE THE FUMES. DO NOT SMOKE. DO NOT USE THESE MATERIALS NEAR A FLAME, SPARKS OR SOURCES OF HEAT. USE PROTECTIVE CLOTHING, GOGGLES AND GLOVES. IF YOU GET ONE OF THESE MATERIALS ON YOUR SKIN OR IN YOUR EYES, FLUSH IT AWAY WITH A FLOW OF CLEAN WATER. IF YOU GET ONE OF THESE MATERIALS IN YOUR MOUTH, GET IMMEDIATE MEDICAL AID. IN GENERAL, THESE MATERIALS ARE POISONOUS, FLAMMABLE AND SKIN IRRITANTS.**

CAUTION: **DO ALL THE WORK ON A CLEAN, SOFT SURFACE TO PREVENT DAMAGE TO THE COMPONENTS.**

SUB TASK 25-41-51-000-126-A01

1. Removal and Disassembly of the Panel Assembly of the Washbasin Unit (17C-1)

(a) Remove the paper roll holder assembly 17C-040 from the washbasin-unit panel assembly 17C-010.

(b) Disassemble the paper roll holder assembly 17C-040 as follows:

1 Remove the cable tie 17C-060 and the rollers 17C-050.

(c) Remove the ground cable from the washbasin-unit panel assembly 17C-010.

(d) Remove the screws 17C-020, the washers 17C-030 and the washbasin-unit panel assembly 17C-010 from the lavatory structure.

TASK 25-41-51-000-814-E01

D2549010400200 D2549010400600 D2549010401000 D2549010401400 D2549010403200
D2549010403400 D2549010403800 D2549010404000 D2549010404600 D2549010404800
D2549010405000 D2549010405800 D2549010407000 D2549010514400 D2549010601200
D2549010601400 D2549010603200 D2549010603600 D2549010604800 D2549010606400
D2549010607800 D2549010609400 D2549010609800 D2549010610600 D2549010611000
D2549010612600 D2549010613400 D2549010614200 D2549010614400 D2549010614600
D2549020300400 D2549020301600 D2549020302800 D2549020400200 D2549020400800
D2549020401000 D2549020402200 D2549020403200 D2549020404400 D2549020405600
D2549020406400 D2549020407200 D2549020407400 D2549020408000 D2549020409200
D2549020409400 D2549020410400 D2549020412000 D2549020412200 D2549020412400
D2549020412800 D2549020413200 D2549020414600 D2549020510400 D2549020510600
D2549020512200 D2549020512400 D2549020513000 D2549020604600 D2549020605400
D2549020610800 D2549020702200 D2549020705800 D2549020710000 D2549020712400
D2549020712800 D2549020713000 D2549020713800 D2549020800800 D2549020801200
D2549020802400 D2549020803800 D2549020805200 D2549020805400 D2549020806200
D2549020806400 D2549020806800 D2549020807400 D2549020808800 D2549020809400
D2549020811600 D2549020812400 D2549020813200 D2549020813400 D2549020814400
D2549020814800 D2549030402200 D2549030404000 D2549030405400 D2549030407200
D2549030409600 D2549030410600 D2549030410800 D2549030412000 D2549030414000
D2549030414200 D2549030507200 D2549030507400 D2549030508600 D2549030510200
D2549030511000 D2549030512000 D2549030514800 D2549030600800 D2549030601600
D2549030603600 D2549030607800 D2549030612600 D2549030613600 D2549030700600
D2549030701600 D2549030704000 D2549030704800 R225401168-000 R225401168-002
R225401168-004 R225401168-006 R225401168-008 R225401168-010 R225401168-012
R225401168-014 R225401168-016 R225401168-018 R225401168-020 R225401168-022
R225401168-024 R225401168-026 R225401168-028 R225401183-000 R225401183-002
R225401183-004 R225401183-006 R225401183-008 R225401196-024 R225401196-070
R225401603-000 R225401649-000 R225401658-000 R225401671-000 R225401671-002
R225401685-000 R225401685-002 R225401811-000

157. Removal and Disassembly of the Panel Assembly of the Washbasin Unit

A. General

A complete disassembly of the component is not necessary and not recommended.

Do not disassemble the component more than it is necessary for:

- Cleaning
- Visual Inspection
- Replacement of defective parts.

B. Procedure

WARNING: **BE CAREFUL WHEN YOU USE SOLVENTS/CLEANING AGENTS, SEALANTS AND OTHER MATERIALS. OBEY THE MATERIAL MANUFACTURER'S INSTRUCTIONS AND THE LOCAL REGULATIONS. MAKE SURE THAT THERE IS A GOOD FLOW OF AIR THROUGH THE WORK AREA. DO NOT BREATHE THE FUMES. DO NOT SMOKE. DO NOT USE THESE MATERIALS NEAR A FLAME, SPARKS OR SOURCES OF HEAT. USE PROTECTIVE CLOTHING, GOGGLES AND GLOVES. IF YOU GET ONE OF THESE MATERIALS ON YOUR SKIN OR IN YOUR EYES, FLUSH IT AWAY WITH A FLOW OF CLEAN WATER. IF YOU GET ONE OF THESE MATERIALS IN YOUR MOUTH, GET IMMEDIATE MEDICAL AID. IN GENERAL, THESE MATERIALS ARE POISONOUS, FLAMMABLE AND SKIN IRRITANTS.**

CAUTION: **DO ALL THE WORK ON A CLEAN, SOFT SURFACE TO PREVENT DAMAGE TO THE COMPONENTS.**

SUB TASK 25-41-51-000-127-A01

1. Removal and Disassembly of the Panel Assembly of the Washbasin Unit (17D-1)

   (a) Remove the paper roll holder assembly 17D-040 from the washbasin-unit panel assembly 17D-010.

   (b) Disassembly the paper roll holder assembly 17D-040 as follows:

      1 Remove the cable tie 17D-060 and the rollers 17D-050.

   (c) Remove the ground cable from the washbasin-unit panel assembly 17D-010.

   (d) Remove the screws 17D-020, the washers 17D-030 and the washbasin-unit panel assembly 17D-010 from the lavatory structure.

TASK 25-41-51-000-814-F01
D2549010405600 D2549030413400 D2549030414600 D2549030701800 D2549030702000 D2549030703000 D2549030704400 D2549030705600 R225401808-000 R225401814-000

158. Removal and Disassembly of the Panel Assembly of the Washbasin Unit

A. General

A complete disassembly of the component is not necessary and not recommended.

Do not disassemble the component more than it is necessary for:

- Cleaning
- Visual Inspection
- Replacement of defective parts.

B. Procedure

WARNING: BE CAREFUL WHEN YOU USE SOLVENTS/CLEANING AGENTS, SEALANTS AND OTHER MATERIALS. OBEY THE MATERIAL MANUFACTURER'S INSTRUCTIONS AND THE LOCAL REGULATIONS. MAKE SURE THAT THERE IS A GOOD FLOW OF AIR THROUGH THE WORK AREA. DO NOT BREATHE THE FUMES. DO NOT SMOKE. DO NOT USE THESE MATERIALS NEAR A FLAME, SPARKS OR SOURCES OF HEAT. USE PROTECTIVE CLOTHING, GOGGLES AND GLOVES. IF YOU GET ONE OF THESE MATERIALS ON YOUR SKIN OR IN YOUR EYES, FLUSH IT AWAY WITH A FLOW OF CLEAN WATER. IF YOU GET ONE OF THESE MATERIALS IN YOUR MOUTH, GET IMMEDIATE MEDICAL AID. IN GENERAL, THESE MATERIALS ARE POISONOUS, FLAMMABLE AND SKIN IRRITANTS.

CAUTION: DO ALL THE WORK ON A CLEAN, SOFT SURFACE TO PREVENT DAMAGE TO THE COMPONENTS.

SUB TASK 25-41-51-000-128-A01

1. Removal and Disassembly of the Panel Assembly of the Washbasin Unit (17E-1)

(a) Remove the paper roll holder assembly 17E-040 from the washbasin-unit panel assembly 17E-010.

(b) Disassemble the paper roll holder assembly 17E-040 as follows:

1 Remove the cable tie 17E-060 and the rollers 17E-050.

(c) Remove the ground cable from the washbasin-unit panel assembly 17E-010.

(d) Remove the screws 17E-020, the washers 17E-030 and the washbasin-unit panel assembly 17E-010 from the lavatory structure.

TASK 25-41-51-000-814-G01
D2547161903000

159. Removal and Disassembly of the Panel Assembly of the Washbasin Unit

A. General

A complete disassembly of the component is not necessary and not recommended.

Do not disassemble the component more than it is necessary for:

- Cleaning
- Visual Inspection
- Replacement of defective parts.

B. Job Set-up Information

(1) Not applicable

C. Procedure

WARNING: BE CAREFUL WHEN YOU USE SOLVENTS/CLEANING AGENTS, SEALANTS AND OTHER MATERIALS. OBEY THE MATERIAL MANUFACTURER'S INSTRUCTIONS AND THE LOCAL REGULATIONS. MAKE SURE THAT THERE IS A GOOD FLOW OF AIR THROUGH THE WORK AREA. DO NOT BREATHE THE FUMES. DO NOT SMOKE. DO NOT USE THESE MATERIALS NEAR A FLAME, SPARKS OR SOURCES OF HEAT. USE PROTECTIVE CLOTHING, GOGGLES AND GLOVES. IF YOU GET ONE OF THESE MATERIALS ON YOUR SKIN OR IN YOUR EYES, FLUSH IT AWAY WITH A FLOW OF CLEAN WATER. IF YOU GET ONE OF THESE MATERIALS IN YOUR MOUTH, GET IMMEDIATE MEDICAL AID. IN GENERAL, THESE MATERIALS ARE POISONOUS, FLAMMABLE AND SKIN IRRITANTS.

CAUTION: DO ALL THE WORK ON A CLEAN, SOFT SURFACE TO PREVENT DAMAGE TO THE COMPONENTS.

SUB TASK 25-41-51-000-130-A01

1. Removal and Disassembly of the Panel Assembly of the Washbasin Unit (17F-1)

NOTE: **See TABLE 3558 for the references for the replacement procedures of permanent installed parts.**

IPL FIG. ITEM	COMPONENT PART NAME	IPL FIG. ITEM	REPLACEMENT PART NAME	SEE REPAIR TASK
17F-001 17F-020	Washbasin Unit Panel Assembly Roll Holder	17F-030	Nut	Replacement of the Riveted Parts
17F-001	Washbasin Unit Panel Assembly	17F-130	Protective Plate Assembly	Replacement of the Riveted Parts

Table 3558
Reference list for the replacement of permanent installed parts

(a) Remove the screws 17F-060 and the paper roll holder 17F-070 from the roll holders 17F-020.

(b) Disassemble the paper roll holder 17F-070 as follows:

1 Remove the cable tie 17F-090 and the rollers 17F-080.

(c) Remove the screws 17F-050, the washers 17F-040 and the roll holders 17F-020 from the washbasin-unit panel assembly 17F-010.

(d) Remove the screws 17F-050, the washers 17F-180 and the washbasin-unit panel assembly 17F-010 from the washbasin unit bracket 17F-100 and from the bracket 17F-120.

(e) Remove the cling strip 17F-135.

(f) Remove the ground cables from the washbasin unit bracket 17F-100 and from the bracket 17F-120.

(g) Remove the screws 17F-110, the washers 17F-040, the washbasin unit bracket 17F-100 and the bracket 17F-120 from the lavatory structure.

(h) Disassemble the bracket 17F-120 as follows:

1 Remove the screws 17F-170, the washers 17F-180, the nuts 17F-200 and the bracket 17F-140.

2 Remove the screws 17F-210, the washers 17F-180, the nuts 17F-190 and the spacer 17F-160 from the bracket 17F-140.

(i) Disassemble the washbasin unit bracket 17F-100 as follows:

1 Remove the screws 17F-170, the washers 17F-180, the nuts 17F-200 and the bracket 17F-150.

2 Remove the screws 17F-210, the washers 17F-180, the nuts 17F-190 and the spacer 17F-160 from the bracket 17F-150.

TASK 25-41-51-000-814-H01
D2549020712000 D2549020712600 D2549030610200 D2549030701200

160. Removal and Disassembly of the Panel Assembly of the Washbasin Unit

A. General

A complete disassembly of the component is not necessary and not recommended.

Do not disassemble the component more than it is necessary for:

- Cleaning
- Visual Inspection
- Replacement of defective parts.

B. Job Set-up Information
(1) Consumable Materials

REFERENCE	DESIGNATION
08-026	Adhesive/Sealant one Part, RTV Silicone Rubber

Table 3559
Consumable Materials

C. Procedure

WARNING: **BE CAREFUL WHEN YOU USE SOLVENTS/CLEANING AGENTS, SEALANTS AND OTHER MATERIALS. OBEY THE MATERIAL MANUFACTURER'S INSTRUCTIONS AND THE LOCAL REGULATIONS. MAKE SURE THAT THERE IS A GOOD FLOW OF AIR THROUGH THE WORK AREA. DO NOT BREATHE THE FUMES. DO NOT SMOKE. DO NOT USE THESE MATERIALS NEAR A FLAME, SPARKS OR SOURCES OF HEAT. USE PROTECTIVE CLOTHING, GOGGLES AND GLOVES. IF YOU GET ONE OF THESE MATERIALS ON YOUR SKIN OR IN YOUR EYES, FLUSH IT AWAY WITH A FLOW OF CLEAN WATER. IF YOU GET ONE OF THESE MATERIALS IN YOUR MOUTH, GET IMMEDIATE MEDICAL AID. IN GENERAL, THESE MATERIALS ARE POISONOUS, FLAMMABLE AND SKIN IRRITANTS.**

CAUTION: **DO ALL THE WORK ON A CLEAN, SOFT SURFACE TO PREVENT DAMAGE TO THE COMPONENTS.**

SUB TASK 25-41-51-000-129-A01

1. Removal and Disassembly of the Panel Assembly of the Washbasin Unit (17G-1)

NOTE: **See TABLE 3560 for the references for the replacement procedures of permanent installed parts.**

More data for bonded parts are given in column SEE REPAIR TASK. Use the data for the selection of the related repair solution.

IPL FIG. ITEM	COMPONENT PART NAME	IPL FIG. ITEM	REPLACEMENT PART NAME	SEE REPAIR TASK
17G-001 17G-100	Washbasin Unit Panel Assembly Washbasin Unit Bracket	17G-120	Protecting Section	Replacement of the Bonded Parts Material No. 08-026 Adhesive/Sealant one Part, RTV Silicone Rubber
17G-001 17G-140	Washbasin Unit Panel Assembly Angle	17G-150	Nut	Replacement of the Riveted Parts

Table 3560
Reference list for the replacement of permanent installed parts

(a) Remove the paper roll holder assembly 17G-020 from the washbasin-unit panel assembly 17G-010.

(b) Disassemble the paper roll holder assembly 17G-020 as follows:

1 Remove the cable tie 17G-040 and the rollers 17G-030.

(c) Remove the ground cable from the washbasin-unit panel assembly 17G-010.

(d) Remove the screws 17G-070, 17G-080, the washers 17G-060, 17G-090 and the washbasin-unit panel assembly 17G-010 from the lavatory structure.

(e) Disassemble the washbasin-unit panel assembly 17G-010 as follows:

1 Remove and disassemble the washbasin unit bracket 17G-100 as follows:
a Remove the screws 17G-070, the washers 17G-060 and the bracket 17G-110 from the washbasin-unit panel assembly 17G-010.

2 Remove the screws 17G-070, the washers 17G-060 and the washbasin unit bracket 17G-130.

3 Remove the screws 17G-070, the washers 17G-060 and the angle 17G-140.

TASK 25-41-51-000-815-A01

D2547160900200 D2547160900400 D2547161903000 D2549010400000 D2549010400200
D2549010400400 D2549010400600 D2549010400800 D2549010401000 D2549010401400
D2549010401600 D2549010401800 D2549010402000 D2549010402200 D2549010402400
D2549010402600 D2549010402800 D2549010403000 D2549010403200 D2549010403400
D2549010403600 D2549010403800 D2549010404000 D2549010404200 D2549010404400
D2549010404600 D2549010404800 D2549010405000 D2549010405200 D2549010405400
D2549010405600 D2549010405800 D2549010406000 D2549010406200 D2549010406400
D2549010406800 D2549010407000 D2549010500000 D2549010500400 D2549010500600
D2549010500800 D2549010501000 D2549010501200 D2549010501400 D2549010501600
D2549010501800 D2549010502000 D2549010502200 D2549010502400 D2549010502600
D2549010502800 D2549010503200 D2549010503400 D2549010503600 D2549010503800
D2549010504200 D2549010504400 D2549010504600 D2549010504800 D2549010505000
D2549010505200 D2549010505400 D2549010505600 D2549010505800 D2549010506000
D2549010506200 D2549010506400 D2549010506800 D2549010507000 D2549010507200
D2549010507400 D2549010507600 D2549010507800 D2549010508000 D2549010508200
D2549010508400 D2549010508600 D2549010508800 D2549010509000 D2549010509200
D2549010509400 D2549010509600 D2549010509800 D2549010510000 D2549010510200
D2549010510400 D2549010510600 D2549010510800 D2549010511000 D2549010511200
D2549010511400 D2549010511600 D2549010511800 D2549010512000 D2549010512200
D2549010512400 D2549010512600 D2549010513000 D2549010513200 D2549010513400
D2549010513600 D2549010513800 D2549010514000 D2549010514200 D2549010514400
D2549010514600 D2549010514800 D2549010600000 D2549010600200 D2549010600400
D2549010600600 D2549010600800 D2549010601000 D2549010601200 D2549010601400
D2549010601600 D2549010601800 D2549010602000 D2549010602200 D2549010602400
D2549010602600 D2549010602800 D2549010603000 D2549010603200 D2549010603400
D2549010603600 D2549010603800 D2549010604000 D2549010604200 D2549010604400
D2549010604600 D2549010604800 D2549010605000 D2549010605200 D2549010605600
D2549010605800 D2549010606000 D2549010606200 D2549010606400 D2549010606600
D2549010606800 D2549010607000 D2549010607200 D2549010607400 D2549010607600
D2549010607800 D2549010608200 D2549010608400 D2549010608600 D2549010608800
D2549010609000 D2549010609200 D2549010609400 D2549010609600 D2549010609800
D2549010610000 D2549010610200 D2549010610400 D2549010610600 D2549010610800
D2549010611000 D2549010611200 D2549010611400 D2549010611600 D2549010611800
D2549010612000 D2549010612200 D2549010612400 D2549010612600 D2549010613000
D2549010613200 D2549010613400 D2549010613600 D2549010613800 D2549010614200
D2549010614400 D2549010614600 D2549010614800 D2549020300000 D2549020300400
D2549020300600 D2549020300800 D2549020301000 D2549020301600 D2549020301800
D2549020302000 D2549020302800 D2549020400000 D2549020400200 D2549020400400
D2549020400600 D2549020400800 D2549020401000 D2549020401200 D2549020401400
D2549020401600 D2549020402000 D2549020402200 D2549020402400 D2549020402600
D2549020403000 D2549020403200 D2549020403400 D2549020403600 D2549020403800
D2549020404000 D2549020404200 D2549020404400 D2549020404600 D2549020404800
D2549020405000 D2549020405200 D2549020405400 D2549020405600 D2549020405800
D2549020406000 D2549020406200 D2549020406400 D2549020406600 D2549020406800
D2549020407000 D2549020407200 D2549020407400 D2549020407600 D2549020407800
D2549020408000 D2549020408200 D2549020408600 D2549020408800 D2549020409000

D2549020409200 D2549020409400 D2549020409600 D2549020409800 D2549020410200
D2549020410400 D2549020410600 D2549020410800 D2549020411000 D2549020411200
D2549020411400 D2549020411600 D2549020411800 D2549020412000 D2549020412200
D2549020412400 D2549020412600 D2549020412800 D2549020413000 D2549020413200
D2549020413400 D2549020413600 D2549020413800 D2549020414000 D2549020414200
D2549020414600 D2549020414800 D2549020500000 D2549020500200 D2549020500400
D2549020500600 D2549020500800 D2549020501000 D2549020501200 D2549020501400
D2549020501600 D2549020501800 D2549020502000 D2549020502200 D2549020502400
D2549020502600 D2549020502800 D2549020503000 D2549020503200 D2549020503400
D2549020503600 D2549020503800 D2549020504000 D2549020504200 D2549020504400
D2549020504600 D2549020504800 D2549020505000 D2549020505200 D2549020505400
D2549020505600 D2549020505800 D2549020506200 D2549020506400 D2549020506600
D2549020506800 D2549020507000 D2549020507200 D2549020507400 D2549020507600
D2549020507800 D2549020508000 D2549020508200 D2549020508400 D2549020508600
D2549020508800 D2549020509000 D2549020509200 D2549020509600 D2549020509800
D2549020510000 D2549020510400 D2549020510600 D2549020510800 D2549020511000
D2549020511200 D2549020511600 D2549020511800 D2549020512000 D2549020512200
D2549020512400 D2549020512600 D2549020512800 D2549020513000 D2549020513200
D2549020513400 D2549020513600 D2549020513800 D2549020514000 D2549020514200
D2549020514400 D2549020514600 D2549020514800 D2549020600000 D2549020600200
D2549020600400 D2549020600800 D2549020601000 D2549020601200 D2549020601400
D2549020601600 D2549020601800 D2549020602000 D2549020602200 D2549020602400
D2549020602600 D2549020602800 D2549020603000 D2549020603200 D2549020603400
D2549020603600 D2549020603800 D2549020604000 D2549020604200 D2549020604400
D2549020604600 D2549020604800 D2549020605000 D2549020605200 D2549020605400
D2549020605600 D2549020605800 D2549020606000 D2549020606400 D2549020606600
D2549020606800 D2549020607000 D2549020607200 D2549020607400 D2549020607600
D2549020607800 D2549020608200 D2549020608400 D2549020608600 D2549020608800
D2549020609000 D2549020609200 D2549020609400 D2549020609600 D2549020609800
D2549020610000 D2549020610200 D2549020610400 D2549020610600 D2549020610800
D2549020611000 D2549020611200 D2549020611400 D2549020611600 D2549020611800
D2549020612000 D2549020612200 D2549020612400 D2549020612600 D2549020612800
D2549020613000 D2549020613200 D2549020613600 D2549020613800 D2549020614000
D2549020614400 D2549020614600 D2549020614800 D2549020700000 D2549020700200
D2549020700400 D2549020700600 D2549020700800 D2549020701000 D2549020701200
D2549020701400 D2549020701600 D2549020701800 D2549020702000 D2549020702200
D2549020702400 D2549020702600 D2549020702800 D2549020703200 D2549020703400
D2549020703600 D2549020703800 D2549020704000 D2549020704200 D2549020704400
D2549020704600 D2549020704800 D2549020705000 D2549020705200 D2549020705400
D2549020705600 D2549020705800 D2549020706000 D2549020706200 D2549020706400
D2549020706600 D2549020706800 D2549020707000 D2549020707200 D2549020707400
D2549020707600 D2549020707800 D2549020708000 D2549020708200 D2549020708400
D2549020708600 D2549020708800 D2549020709000 D2549020709200 D2549020709400
D2549020709600 D2549020709800 D2549020710000 D2549020710200 D2549020710400
D2549020710600 D2549020710800 D2549020711000 D2549020711200 D2549020711400
D2549020711600 D2549020712000 D2549020712200 D2549020712400 D2549020712600
D2549020712800 D2549020713000 D2549020713200 D2549020713400 D2549020713600

D2549020713800 D2549020714000 D2549020714400 D2549020714600 D2549020800000
D2549020800200 D2549020800400 D2549020800600 D2549020800800 D2549020801000
D2549020801200 D2549020801400 D2549020801600 D2549020801800 D2549020802000
D2549020802200 D2549020802400 D2549020802600 D2549020802800 D2549020803000
D2549020803200 D2549020803400 D2549020803600 D2549020803800 D2549020804000
D2549020804200 D2549020804400 D2549020804800 D2549020805000 D2549020805200
D2549020805400 D2549020805600 D2549020805800 D2549020806000 D2549020806200
D2549020806400 D2549020806600 D2549020806800 D2549020807000 D2549020807200
D2549020807400 D2549020807600 D2549020807800 D2549020808200 D2549020808400
D2549020808600 D2549020808800 D2549020809000 D2549020809400 D2549020809600
D2549020809800 D2549020810000 D2549020810200 D2549020810400 D2549020810600
D2549020810800 D2549020811200 D2549020811400 D2549020811600 D2549020811800
D2549020812000 D2549020812200 D2549020812400 D2549020812600 D2549020812800
D2549020813000 D2549020813200 D2549020813400 D2549020813600 D2549020813800
D2549020814000 D2549020814200 D2549020814400 D2549020814600 D2549020814800
D2549030400000 D2549030400200 D2549030400400 D2549030400600 D2549030401000
D2549030401200 D2549030401400 D2549030401600 D2549030401800 D2549030402000
D2549030402200 D2549030402400 D2549030402600 D2549030402800 D2549030403000
D2549030403400 D2549030403600 D2549030403800 D2549030404000 D2549030404200
D2549030404400 D2549030404600 D2549030404800 D2549030405000 D2549030405200
D2549030405400 D2549030405600 D2549030405800 D2549030406000 D2549030406400
D2549030406600 D2549030406800 D2549030407000 D2549030407200 D2549030407400
D2549030407600 D2549030407800 D2549030408000 D2549030408200 D2549030408400
D2549030408600 D2549030409000 D2549030409200 D2549030409400 D2549030409600
D2549030409800 D2549030410000 D2549030410200 D2549030410400 D2549030410600
D2549030410800 D2549030411200 D2549030411400 D2549030411600 D2549030411800
D2549030412000 D2549030412200 D2549030412400 D2549030412600 D2549030412800
D2549030413000 D2549030413200 D2549030413400 D2549030413600 D2549030414000
D2549030414200 D2549030414400 D2549030414600 D2549030414800 D2549030500200
D2549030500400 D2549030500600 D2549030500800 D2549030501000 D2549030501200
D2549030501400 D2549030501600 D2549030501800 D2549030502000 D2549030502200
D2549030502400 D2549030502600 D2549030502800 D2549030503000 D2549030503200
D2549030503400 D2549030503600 D2549030503800 D2549030504000 D2549030504200
D2549030504600 D2549030504800 D2549030505200 D2549030505400 D2549030505600
D2549030505800 D2549030506000 D2549030506200 D2549030506400 D2549030506600
D2549030506800 D2549030507000 D2549030507200 D2549030507400 D2549030507600
D2549030507800 D2549030508000 D2549030508200 D2549030508400 D2549030508600
D2549030508800 D2549030509000 D2549030509200 D2549030509400 D2549030509600
D2549030509800 D2549030510000 D2549030510200 D2549030510400 D2549030510600
D2549030510800 D2549030511000 D2549030511200 D2549030511400 D2549030511600
D2549030511800 D2549030512000 D2549030512200 D2549030512400 D2549030512800
D2549030513000 D2549030513200 D2549030513400 D2549030513600 D2549030513800
D2549030514000 D2549030514200 D2549030514400 D2549030514600 D2549030514800
D2549030600000 D2549030600200 D2549030600400 D2549030600600 D2549030600800
D2549030601000 D2549030601200 D2549030601400 D2549030601600 D2549030601800
D2549030602000 D2549030602200 D2549030602400 D2549030602600 D2549030602800
D2549030603000 D2549030603200 D2549030603400 D2549030603600 D2549030603800

D2549030604200 D2549030604400 D2549030604600 D2549030604800 D2549030605000
D2549030605200 D2549030605400 D2549030605600 D2549030605800 D2549030606000
D2549030606200 D2549030606400 D2549030606600 D2549030606800 D2549030607000
D2549030607200 D2549030607400 D2549030607600 D2549030607800 D2549030608000
D2549030608200 D2549030608400 D2549030608600 D2549030608800 D2549030609000
D2549030609200 D2549030609800 D2549030610000 D2549030610200 D2549030610400
D2549030610600 D2549030611000 D2549030611200 D2549030611400 D2549030611600
D2549030611800 D2549030612000 D2549030612200 D2549030612400 D2549030612600
D2549030612800 D2549030613200 D2549030613400 D2549030613600 D2549030613800
D2549030614000 D2549030614200 D2549030614400 D2549030614600 D2549030614800
D2549030700000 D2549030700200 D2549030700400 D2549030700600 D2549030700800
D2549030701000 D2549030701200 D2549030701400 D2549030701600 D2549030701800
D2549030702000 D2549030702200 D2549030702400 D2549030702600 D2549030702800
D2549030703000 D2549030703200 D2549030703400 D2549030703600 D2549030703800
D2549030704000 D2549030704200 D2549030704400 D2549030704600 D2549030704800
D2549030705200 D2549030705600 D2549040500200 D2549040500400 D2549040500600
D2549040500800 D2549040501000 D2549040501200 D2549040501400 D2549040501600
D2549040501800 D2549040502000 R225401107-000 R225401107-002 R225401107-004
R225401115-000 R225401115-002 R225401128-000 R225401133-000 R225401134-000
R225401134-002 R225401134-004 R225401134-006 R225401134-008 R225401134-010
R225401134-012 R225401134-014 R225401134-016 R225401134-018 R225401134-020
R225401134-022 R225401134-024 R225401134-026 R225401134-028 R225401134-030
R225401134-032 R225401134-034 R225401134-036 R225401134-038 R225401136-000
R225401136-004 R225401136-006 R225401136-008 R225401136-010 R225401136-012
R225401136-014 R225401136-016 R225401136-018 R225401136-020 R225401136-022
R225401136-024 R225401137-000 R225401137-002 R225401137-004 R225401137-006
R225401137-008 R225401137-010 R225401137-012 R225401137-014 R225401137-016
R225401139-000 R225401142-000 R225401142-002 R225401145-000 R225401145-002
R225401145-004 R225401145-006 R225401145-008 R225401145-010 R225401145-012
R225401145-014 R225401146-000 R225401146-002 R225401152-000 R225401152-002
R225401152-004 R225401152-006 R225401152-008 R225401152-010 R225401153-000
R225401159-000 R225401160-000 R225401160-002 R225401168-000 R225401168-002
R225401168-004 R225401168-006 R225401168-008 R225401168-010 R225401168-012
R225401168-014 R225401168-016 R225401168-018 R225401168-020 R225401168-022
R225401168-024 R225401168-026 R225401168-028 R225401172-000 R225401172-002
R225401172-004 R225401172-006 R225401172-008 R225401172-010 R225401172-012
R225401172-014 R225401172-016 R225401172-018 R225401175-000 R225401175-002
R225401176-000 R225401183-000 R225401183-002 R225401183-004 R225401183-006
R225401183-008 R225401188-000 R225401188-002 R225401188-004 R225401188-006
R225401192-000 R225401192-002 R225401195-000 R225401196-000 R225401196-002
R225401196-004 R225401196-006 R225401196-008 R225401196-010 R225401196-012
R225401196-014 R225401196-016 R225401196-018 R225401196-020 R225401196-022
R225401196-024 R225401196-034 R225401196-036 R225401196-038 R225401196-040
R225401196-042 R225401196-044 R225401196-046 R225401196-048 R225401196-050
R225401196-052 R225401196-054 R225401196-056 R225401196-058 R225401196-060
R225401196-062 R225401196-064 R225401196-066 R225401196-068 R225401196-070
R225401199-000 R225401199-002 R225401199-004 R225401199-006 R225401199-008

R225401199-010 R225401199-012 R225401600-000 R225401600-002 R225401600-004 R225401602-000 R225401603-000 R225401605-000 R225401605-002 R225401609-000 R225401611-000 R225401611-006 R225401611-008 R225401611-010 R225401611-012 R225401611-014 R225401611-016 R225401611-018 R225401611-020 R225401613-000 R225401614-000 R225401618-000 R225401618-002 R225401619-000 R225401619-002 R225401622-000 R225401622-002 R225401624-000 R225401625-000 R225401627-000 R225401627-002 R225401627-004 R225401629-000 R225401629-002 R225401639-000 R225401639-002 R225401643-000 R225401643-002 R225401643-004 R225401643-006 R225401643-008 R225401646-000 R225401646-002 R225401647-000 R225401648-000 R225401648-002 R225401648-004 R225401648-006 R225401648-008 R225401649-000 R225401656-000 R225401656-002 R225401658-000 R225401662-000 R225401662-002 R225401671-000 R225401671-002 R225401673-000 R225401673-002 R225401673-004 R225401673-006 R225401675-000 R225401676-000 R225401683-000 R225401685-000 R225401685-002 R225401688-000 R225401689-004 R225401689-006 R225401691-000 R225401691-002 R225401693-000 R225401697-000 R225401697-002 R225401803-000 R225401803-002 R225401808-000 R225401811-000 R225401814-000

161. Removal and Disassembly of the Waste Bin, the Waste Chute and the Fire Extinguisher

A. General

A complete disassembly of the component is not necessary and not recommended.

Do not disassemble the component more than it is necessary for:

- Cleaning
- Visual Inspection
- Replacement of defective parts.

B. Job Set-up Information
(1) Consumable Materials

REFERENCE	DESIGNATION
08-026	Adhesive/Sealant one Part, RTV Silicone Rubber
08-010A	Epoxy Resin and Hardener Adhesive

Table 3561
Consumable Materials

C. Procedure

WARNING: **BE CAREFUL WHEN YOU USE SOLVENTS/CLEANING AGENTS, SEALANTS AND OTHER MATERIALS. OBEY THE MATERIAL MANUFACTURER'S INSTRUCTIONS AND THE LOCAL REGULATIONS. MAKE SURE THAT THERE IS A GOOD FLOW OF AIR THROUGH THE WORK AREA. DO NOT BREATHE THE FUMES. DO NOT SMOKE. DO NOT USE THESE MATERIALS NEAR A FLAME, SPARKS OR SOURCES OF HEAT. USE PROTECTIVE CLOTHING, GOGGLES AND GLOVES. IF YOU GET ONE OF THESE MATERIALS ON YOUR SKIN OR IN YOUR EYES, FLUSH IT AWAY WITH A FLOW OF CLEAN WATER. IF YOU GET ONE OF THESE MATERIALS IN YOUR MOUTH, GET IMMEDIATE MEDICAL AID. IN GENERAL, THESE MATERIALS ARE POISONOUS, FLAMMABLE AND SKIN IRRITANTS.**

CAUTION: **DO ALL THE WORK ON A CLEAN, SOFT SURFACE TO PREVENT DAMAGE TO THE COMPONENTS.**

CAUTION: **MAKE SURE THAT YOU DO NOT BEND THE DISCHARGE TUBE WHEN YOU REMOVE OR INSTALL THE FIRE EXTINGUISHER. IF YOU DO, YOU CAN CAUSE DAMAGE TO THE JOINT BETWEEN THE DISCHARGE TUBE AND THE CONTAINER.**

SUB TASK 25-41-51-040-129-A01

D2549010500000 D2549010500400 D2549010500600 D2549010500800
D2549010501000 D2549010501200 D2549010501400 D2549010501800
D2549010502000 D2549010502200 D2549010502600 D2549010503200
D2549010503600 D2549010503800 D2549010504200 D2549010504400
D2549010504600 D2549010504800 D2549010505000 D2549010505200
D2549010505400 D2549010505800 D2549010506000 D2549010506400
D2549010507200 D2549010507400 D2549010507600 D2549010508000
D2549010508200 D2549010508400 D2549010508600 D2549010508800
D2549010509200 D2549010511200 D2549020500400 D2549020500800
D2549020501200 D2549020501600 D2549020501800 D2549020502000
D2549020502400 D2549020502600 D2549020503000 D2549020503400
D2549020503600 D2549020503800 D2549020504000 D2549020504200
D2549020504400 D2549020504600 D2549020505000 D2549020505400
D2549020505800 D2549020600000 D2549020600200 D2549020600800
D2549020601000 D2549020601200 D2549020601800 D2549020602400
D2549020602600 D2549020602800 D2549020603200 D2549020603400
D2549020603800 D2549020606400 D2549020606600 D2549020607200
D2549030500200 D2549030500400 D2549030500600 D2549030500800
D2549030501000 D2549030501200 D2549030501400 D2549030501600
D2549030501800 D2549030502000 D2549030502200 D2549030502400
D2549030502600 D2549030502800 D2549030503000 D2549030503200
D2549030503400 D2549030503600 R225401107-000 R225401107-002 R225401115-

002 R225401134-000 R225401139-000 R225401145-000 R225401146-000 R225401146-002 R225401188-000 R225401188-002 R225401188-004 R225401188-006

1. Removal and Disassembly of the Waste Bin, the Waste Chute and the Fire Extinguisher (18-1)

NOTE: **See TABLE 3562 for the references for the replacement procedures of permanent installed parts.**

More data for bonded parts are given in column SEE REPAIR TASK. Use the data for the selection of the related repair solution.

IPL FIG. ITEM	COMPONENT PART NAME	IPL FIG. ITEM	REPLACEMENT PART NAME	SEE REPAIR TASK
18-001 18-060	Waste Bin, Waste Chute and Fire Extinguisher Waste-Box Console Assembly	18-080	Sliding Strip	Replacement of the Bonded Parts self adhesive
18-001 18-060	Waste Bin, Waste Chute and Fire Extinguisher Waste-Box Console Assembly	18-090	Hose Section	Replacement of the Bonded Parts Material No. 08-026 Adhesive/ Sealant one Part, RTV Silicone Rubber
18-001 18-060	Waste Bin, Waste Chute and Fire Extinguisher Waste-Box Console Assembly	18-140	Foam Self-Adhesive Tape	Replacement of the Bonded Parts Material No. 08-010A Epoxy Resin and Hardener Adhesive

Table 3562
Reference list for the replacement of permanent installed parts

(b) Remove the waste container 18-050 from the waste-box console assembly 18-060.

(c) Remove the screws 18-040, the washers 18-160, 18-175, the nuts 18-180 and the fire extinguisher 18-170.

NOTE: For further instructions, see CMMV 26-25-12_U3061 (fire extinguisher).

NOTE: For further instructions, see CMMV 26-25-36_U3061 (fire extinguisher).

(d) Remove and disassemble the waste chute 18-010 as follows:

1 Remove the screws 18-040, the nuts 18-020 and the waste chute 18-010 with the caps 18-030 from the waste-box console assembly 18-060.

(e) Remove the screws 18-150, the washers 18-160 and the waste-box console assembly 18-060 from the lavatory structure.

(f) Disassemble the waste-box console assembly 18-060 as follows:

1 Remove the screws 18-110, the washers 18-120, the nuts 18-130 and the cover 18-100.

(g) Remove the screws 18-230, the washers 18-240, the nuts 18-250 and the door ejector assembly 18-190 from the waste-box console assembly 18-060.

(h) Disassemble the door ejector assembly 18-190 as follows:

1 Remove the bumper 18-210 and the shim 18-220 from the door ejector 18-200.

SUB TASK 25-41-51-040-129-B01
D2549010501600 D2549010502800 D2549010503400 D2549010506200 D2549010507000

2. Removal and Disassembly of the Waste Bin, the Waste Chute and the Fire Extinguisher (18-1)

NOTE: See TABLE 3563 for the references for the replacement procedures of permanent installed parts.

More data for bonded parts are given in column SEE REPAIR TASK. Use the data for the selection of the related repair solution.

IPL FIG. ITEM	COMPONENT PART NAME	IPL FIG. ITEM	REPLACEMENT PART NAME	SEE REPAIR TASK
18-001 18-060	Waste Bin, Waste Chute and Fire Extinguisher Waste-Box Console Assembly	18-080	Sliding Strip	Replacement of the Bonded Parts self adhesive
18-001 18-060	Waste Bin, Waste Chute and Fire Extinguisher Waste-Box Console Assembly	18-090	Hose Section	Replacement of the Bonded Parts Material No. 08-026 Adhesive/ Sealant one Part, RTV Silicone Rubber
18-001 18-060	Waste Bin, Waste Chute and Fire Extinguisher Waste-Box Console Assembly	18-140	Foam Self-Adhesive Tape	Replacement of the Bonded Parts Material No. 08-010A Epoxy Resin and Hardener Adhesive
18-001 18-010	Waste Bin, Waste Chute and Fire Extinguisher Waste Chute	18-260	Temperature Plate	Replacement of the Self-adhesive Placards

Table 3563
Reference list for the replacement of permanent installed parts

(b) Remove the waste container 18-050 from the waste-box console assembly 18-060.

(c) Remove the screws 18-040, the washers 18-160, 18-175, the nuts 18-180 and the fire extinguisher 18-170.

NOTE: For further instructions, see CMMV 26-25-04_61423 (fire extinguisher).

(d) Remove and disassemble the waste chute 18-010 as follows:

1 Remove the screws 18-040, the nuts 18-020 and the waste chute 18-010 with the caps 18-030 from the waste-box console assembly 18-060.

(e) Remove the screws 18-150, the washers 18-160 and the waste-box console assembly 18-060 from the lavatory structure.

(f) Disassemble the waste-box console assembly 18-060 as follows:

1 Remove the screws 18-110, the washers 18-120, the nuts 18-130 and the cover 18-100.

(g) Remove the screws 18-230, the washers 18-240, the nuts 18-250 and the door ejector assembly 18-190 from the waste-box console assembly 18-060.

(h) Disassemble the door ejector assembly 18-190 as follows:

1 Remove the bumper 18-210 and the shim 18-220 from the door ejector 18-200.

SUB TASK 25-41-51-040-129-C01
D2549020603600 D2549020604000

3. Removal and Disassembly of the Waste Bin, the Waste Chute and the Fire Extinguisher (18-1)

NOTE: **See TABLE 3564 for the references for the replacement procedures of permanent installed parts.**

More data for bonded parts are given in column SEE REPAIR TASK. Use the data for the selection of the related repair solution.

IPL FIG. ITEM	COMPONENT PART NAME	IPL FIG. ITEM	REPLACEMENT PART NAME	SEE REPAIR TASK
18-001 18-010	Waste Bin, Waste Chute and Fire Extinguisher Waste Chute	18-015	Section	Replacement of the Bonded Parts Material No. 08-026 Adhesive/Sealant one Part, RTV Silicone Rubber
18-001 18-010	Waste Bin, Waste Chute and Fire Extinguisher	18-017	Support Fitting	Replacement of the Riveted Parts

Table 3564
Reference list for the replacement of permanent installed parts

	Waste Chute			
18-001 18-060	Waste Bin, Waste Chute and Fire Extinguisher Waste-Box Console Assembly	18-080	Sliding Strip	Replacement of the Bonded Parts self adhesive
18-001 18-060	Waste Bin, Waste Chute and Fire Extinguisher Waste-Box Console Assembly	18-090	Hose Section	Replacement of the Bonded Parts Material No. 08-026 Adhesive/Sealant one Part, RTV Silicone Rubber
18-001 18-060	Waste Bin, Waste Chute and Fire Extinguisher Waste-Box Console Assembly	18-123	Nut	Replacement of the Riveted Parts
18-001 18-060	Waste Bin, Waste Chute and Fire Extinguisher Waste-Box Console Assembly	18-125	Nut	Replacement of the Riveted Parts
18-001 18-060	Waste Bin, Waste Chute and Fire Extinguisher Waste-Box Console Assembly	18-140	Foam Self-Adhesive Tape	Replacement of the Bonded Parts Material No. 08-010A Epoxy Resin and Hardener Adhesive

Table 3564
Reference list for the replacement of permanent installed parts

(b) Remove the waste container 18-050 from the waste-box console assembly 18-060.

(c) Remove the screws 18-040, the washers 18-160, 18-175, the nuts 18-180 and the fire extinguisher 18-170.

NOTE: For further instructions, see CMMV 26-25-12_U3061 (fire extinguisher).

NOTE: For further instructions, see CMMV 26-25-36_U3061 (fire extinguisher).

(d) Remove and disassemble the waste chute 18-010 as follows:

1 Remove the screws 18-040 and the waste chute 18-010 from the waste-box console assembly 18-060.

(e) Remove the screws 18-150, the washers 18-160 and the waste-box console assembly 18-060 from the lavatory structure.

(f) Remove the screw 18-320, the washer 18-330, the nut 18-340 and the waste-box console assembly 18-060 from the lavatory structure.

(g) Disassemble the waste-box console assembly 18-060 as follows:

1 Remove the screws 18-110, the washers 18-120, the nuts 18-130 and the cover 18-100.

(h) Remove the screws 18-230, the washers 18-240, the nuts 18-250 and the door ejector assembly 18-190 from the waste-box console assembly 18-060.

(i) Disassemble the door ejector assembly 18-190 as follows:

1 Remove the bumper 18-210 and the shim 18-220 from the door ejector 18-200.

SUB TASK 25-41-51-040-129-D01

D2549010509000 D2549010509600 D2549010509800 D2549010510000
D2549010510200 D2549010510400 D2549010510600 D2549010510800
D2549010511000 D2549010511400 D2549010511600 D2549010511800
D2549010512000 D2549010512400 D2549010512600 D2549010513000
D2549010513200 D2549010513400 D2549010513600 D2549010513800
D2549010514000 D2549010514200 D2549010514400 D2549010514600
D2549010514800 D2549010600000 D2549010600200 D2549010600400
D2549010600600 D2549010601000 D2549010601200 D2549010601400
D2549010601600 D2549010601800 D2549010602000 D2549010602200
D2549010602400 D2549010602600 D2549010602800 D2549010603000
D2549010603200 D2549010603400 D2549010603600 D2549010603800
D2549010604000 D2549010604200 D2549010604400 D2549010604600
D2549010604800 D2549010605000 D2549010605200 D2549010605600
D2549010605800 D2549010606000 D2549010606200 D2549010606400
D2549010606600 D2549010606800 D2549010607000 D2549010607200
D2549010607400 D2549010607600 D2549010607800 D2549010608200
D2549010608400 D2549010608600 D2549010608800 D2549010609000
D2549010609200 D2549010609400 D2549010609600 D2549010609800
D2549010610000 D2549010610200 D2549010610400 D2549010612000
D2549010612200 D2549010614800 D2549020502200 D2549020505600
D2549020506600 D2549020506800 D2549020507400 D2549020507600

D2549020507800 D2549020508000 D2549020508200 D2549020508400
D2549020508600 D2549020508800 D2549020509000 D2549020509200
D2549020509600 D2549020509800 D2549020510000 D2549020510400
D2549020510600 D2549020510800 D2549020511000 D2549020511200
D2549020511600 D2549020511800 D2549020512000 D2549020512200
D2549020512400 D2549020512600 D2549020512800 D2549020513000
D2549020513200 D2549020513400 D2549020513600 D2549020514000
D2549020514200 D2549020514400 D2549020514600 D2549020514800
D2549020602200 D2549020604200 D2549020604400 D2549020604600
D2549020604800 D2549020605000 D2549020605200 D2549020605400
D2549020605600 D2549020605800 D2549020606000 D2549020606800
D2549020607000 D2549020607400 D2549020607600 D2549020607800
D2549020608200 D2549020608400 D2549020608600 D2549020608800
D2549020609000 D2549020609200 D2549020609400 D2549020609600
D2549020609800 D2549020610000 D2549020610400 D2549020610600
D2549020610800 D2549020611000 D2549020611200 D2549020611400
D2549020611600 D2549020611800 D2549020612000 D2549020612400
D2549020612600 D2549020612800 D2549020613000 D2549020613200
D2549020613600 D2549020613800 D2549020614000 D2549020614400
D2549020614600 D2549020614800 D2549020700200 D2549020700400
D2549020700600 D2549020700800 D2549020701200 D2549020701400
D2549020701600 D2549020701800 D2549020702000 D2549020702200
D2549020702400 D2549020702600 D2549020702800 D2549020703200
D2549020703400 D2549020703600 D2549020703800 D2549020704000
D2549020704200 D2549020704400 D2549020704600 D2549020704800
D2549020705000 D2549020705200 D2549020705600 D2549020705800
D2549020706000 D2549020706200 D2549020706400 D2549020706600
D2549020706800 D2549020707000 D2549020707200 D2549020707600
D2549020707800 D2549020708200 D2549020708400 D2549020708600
D2549020708800 D2549020709000 D2549020709200 D2549020709400
D2549020709600 D2549020709800 D2549020710000 D2549020710200
D2549020710400 D2549020710600 D2549020710800 D2549020711000
D2549020711200 D2549020711400 D2549020711600 D2549020712000
D2549020712200 D2549020712400 D2549020712600 D2549020712800
D2549020713000 D2549020713200 D2549020713400 D2549020713600
D2549020713800 D2549020714000 D2549020714400 D2549020714600
D2549020800000 D2549020800200 D2549020800400 D2549020800600
D2549020800800 D2549020801000 D2549020801200 D2549020801400
D2549020801600 D2549020802000 D2549020802200 D2549020802400
D2549020802600 D2549020802800 D2549020803000 D2549020803200
D2549020803400 D2549020803600 D2549020803800 D2549020804000
D2549020807600 D2549020808400 D2549020808600 D2549020808800
D2549020809000 D2549020809400 D2549020810200 D2549030400000
D2549030400200 D2549030400400 D2549030402600 D2549030402800
D2549030403000 D2549030403400 D2549030403800 D2549030405200
D2549030405400 D2549030503800 D2549030504000 D2549030504200
D2549030504600 D2549030504800 D2549030505200 D2549030505600

D2549030505800 D2549030506000 D2549030506200 D2549030506400
D2549030506800 D2549030507000 D2549030507200 D2549030507400
D2549030507600 D2549030507800 D2549030508000 D2549030508200
D2549030508400 D2549030508600 D2549030508800 D2549030509000
D2549030509200 D2549030509600 D2549030509800 D2549030510000
D2549030510200 D2549030510400 D2549030510600 D2549030510800
D2549030511000 D2549030511200 D2549030511400 D2549030511600
D2549030511800 D2549030512000 D2549030512200 D2549030512400
D2549030512800 D2549030513000 D2549030513200 D2549030513400
D2549030513600 D2549030514000 D2549030514200 D2549030514400
D2549030514600 D2549030514800 D2549030600000 D2549030600200
D2549030600400 D2549030600600 D2549030600800 D2549030601000
D2549030601200 D2549030601400 D2549030601600 D2549030602000
D2549030602200 D2549030602400 D2549030602600 D2549030602800
D2549030603000 D2549030603200 D2549030603400 D2549030603600
D2549030604200 D2549030604400 D2549030604600 D2549030604800
D2549030605000 D2549030605200 D2549030605400 D2549030605600
D2549030605800 D2549030606000 D2549030606200 D2549030606400
D2549030606600 D2549030606800 D2549030607000 D2549030607200
D2549030607600 D2549030607800 D2549030608000 D2549030608200
D2549030608400 D2549030608600 D2549030609000 D2549030609200
D2549030609800 D2549030610000 D2549030610200 D2549030610400
D2549030610600 D2549030611000 D2549030611400 D2549030611600
D2549030611800 D2549030612000 D2549030612200 D2549030612400
D2549030612600 D2549030612800 D2549030613400 D2549030613600
D2549030613800 D2549030614200 D2549030614400 D2549030614600
D2549030614800 D2549030700800 D2549030704600 R225401107-004 R225401115-
000 R225401134-002 R225401134-004 R225401134-006 R225401134-008 R225401134-
010 R225401134-012 R225401134-016 R225401134-018 R225401134-020 R225401134-
022 R225401134-024 R225401134-026 R225401134-028 R225401134-030 R225401134-
032 R225401136-000 R225401136-010 R225401136-016 R225401136-020 R225401136-
022 R225401137-000 R225401137-002 R225401137-004 R225401137-006 R225401137-
008 R225401137-010 R225401137-012 R225401137-014 R225401137-016 R225401142-
000 R225401142-002 R225401145-002 R225401145-004 R225401145-006 R225401145-
008 R225401145-012 R225401145-014 R225401152-000 R225401152-002 R225401152-
004 R225401152-006 R225401153-000 R225401159-000 R225401160-000 R225401160-
002 R225401168-000 R225401168-002 R225401168-004 R225401168-006 R225401168-
008 R225401168-010 R225401168-014 R225401168-016 R225401168-018 R225401168-
020 R225401168-022 R225401168-024 R225401168-028 R225401172-000 R225401172-
002 R225401172-004 R225401172-006 R225401172-008 R225401172-010 R225401172-
012 R225401172-014 R225401172-016 R225401172-018 R225401175-000 R225401175-
002 R225401176-000 R225401183-000 R225401183-002 R225401183-008 R225401192-
000 R225401192-002 R225401195-000 R225401196-000 R225401196-002 R225401196-
004 R225401196-006 R225401196-008 R225401196-034 R225401196-036 R225401196-
038 R225401196-044 R225401196-046 R225401196-048 R225401196-050 R225401196-
052 R225401196-054 R225401199-002 R225401199-004 R225401199-006 R225401199-
008 R225401600-000 R225401600-002 R225401600-004 R225401603-000

R225401605-000 R225401605-002 R225401611-008 R225401611-010 R225401613-000 R225401614-000 R225401618-000 R225401618-002 R225401619-000 R225401619-002 R225401622-000 R225401625-000 R225401629-000 R225401629-002 R225401693-000

4. Removal and Disassembly of the Waste Bin, the Waste Chute and the Fire Extinguisher (18-1)

NOTE: **See TABLE 3565 for the references for the replacement procedures of permanent installed parts.**

More data for bonded parts are given in column SEE REPAIR TASK. Use the data for the selection of the related repair solution.

IPL FIG. ITEM	COMPONENT PART NAME	IPL FIG. ITEM	REPLACEMENT PART NAME	SEE REPAIR TASK
18-001 18-010	Waste Bin, Waste Chute and Fire Extinguisher Waste Chute	18-015	Section	Replacement of the Bonded Parts Material No. 08-026 Adhesive/ Sealant one Part, RTV Silicone Rubber
18-001 18-010	Waste Bin, Waste Chute and Fire Extinguisher Waste Chute	18-017	Support Fitting	Replacement of the Riveted Parts
18-001 18-060	Waste Bin, Waste Chute and Fire Extinguisher Waste-Box Console Assembly	18-080	Sliding Strip	Replacement of the Bonded Parts self adhesive
18-001 18-060	Waste Bin, Waste Chute and Fire Extinguisher Waste-Box Console Assembly	18-090	Hose Section	Replacement of the Bonded Parts Material No. 08-026 Adhesive/ Sealant one Part,

Table 3565
Reference list for the replacement of permanent installed parts

				RTV Silicone Rubber
18-001 18-060	Waste Bin, Waste Chute and Fire Extinguisher Waste-Box Console Assembly	18-123	Nut	Replacement of the Riveted Parts
18-001 18-060	Waste Bin, Waste Chute and Fire Extinguisher Waste-Box Console Assembly	18-125	Nut	Replacement of the Riveted Parts
18-001 18-060	Waste Bin, Waste Chute and Fire Extinguisher Waste-Box Console Assembly	18-140	Foam Self-Adhesive Tape	Replacement of the Bonded Parts Material No. 08-010A Epoxy Resin and Hardener Adhesive

Table 3565
Reference list for the replacement of permanent installed parts

(b) Remove the waste container 18-050 from the waste-box console assembly 18-060.

(c) Remove the screws 18-040, the washers 18-160, 18-175, the nuts 18-180 and the fire extinguisher 18-170.

NOTE: For further instructions, see CMMV 26-25-12_U3061 (fire extinguisher).

NOTE: For further instructions, see CMMV 26-25-36_U3061 (fire extinguisher).

(d) Remove and disassemble the waste chute 18-010 as follows:

1 Remove the screws 18-040 and the waste chute 18-010 from the waste-box console assembly 18-060.

(e) Remove the screws 18-150, the washers 18-160 and the waste-box console assembly 18-060 from the lavatory structure.

(f) Disassemble the waste-box console assembly 18-060 as follows:

1 Remove the screws 18-110, the washers 18-120, the nuts 18-130 and the cover 18-100.

(g) Remove the screws 18-230, the washers 18-240, the nuts 18-250 and the door ejector assembly 18-270 from the waste-box console assembly 18-060.

(h) Disassemble the door ejector assembly 18-270 as follows:

WARNING: BE VERY CAREFUL WHEN YOU REMOVE OR INSTALL THE SPRING. BECAUSE THERE IS REMAINING TENSION IN THE SPRING, IT CAN CAUSE YOU INJURY.

1 Remove the hinge pin 18-300, the door ejector pin 18-290 and the spring 18-310 from the door ejector housing 18-280.

SUB TASK 25-41-51-040-129-E01
D2549020506200 D2549020506400 D2549020507000 D2549020507200
D2549020701000 D2549030402400 D2549030403600 D2549030404400
D2549030505400 D2549030506600 D2549030509400 D2549030513800
D2549030601800 D2549030603800 D2549030607400 D2549030608800
D2549030611200 D2549030613200

5. Removal and Disassembly of the Waste Bin, the Waste Chute and the Fire Extinguisher (18-1)

NOTE: See TABLE 3566 for the references for the replacement procedures of permanent installed parts.

More data for bonded parts are given in column SEE REPAIR TASK. Use the data for the selection of the related repair solution.

IPL FIG. ITEM	COMPONENT PART NAME	IPL FIG. ITEM	REPLACEMENT PART NAME	SEE REPAIR TASK
18-001 18-010	Waste Bin, Waste Chute and Fire Extinguisher Waste Chute	18-015	Section	Replacement of the Bonded Parts Material No. 08-026 Adhesive/ Sealant one Part, RTV Silicone Rubber
18-001 18-010	Waste Bin, Waste Chute and Fire Extinguisher	18-017	Support Fitting	Replacement of the Riveted Parts

Table 3566
Reference list for the replacement of permanent installed parts

	Waste Chute			
18-001 18-060	Waste Bin, Waste Chute and Fire Extinguisher Waste-Box Console Assembly	18-080	Sliding Strip	Replacement of the Bonded Parts self adhesive
18-001 18-060	Waste Bin, Waste Chute and Fire Extinguisher Waste-Box Console Assembly	18-090	Hose Section	Replacement of the Bonded Parts Material No. 08-026 Adhesive/ Sealant one Part, RTV Silicone Rubber
18-001 18-060	Waste Bin, Waste Chute and Fire Extinguisher Waste-Box Console Assembly	18-123	Nut	Replacement of the Riveted Parts
18-001 18-060	Waste Bin, Waste Chute and Fire Extinguisher Waste-Box Console Assembly	18-125	Nut	Replacement of the Riveted Parts
18-001 18-060	Waste Bin, Waste Chute and Fire Extinguisher Waste-Box Console Assembly	18-140	Foam Self-Adhe-sive Tape	Replacement of the Bonded Parts Material No. 08-010A Epoxy Re-sin and Hardener Adhesive

Table 3566
Reference list for the replacement of permanent installed parts

(b) Remove the waste container 18-050 from the waste-box console assembly 18-060.

(c) Remove the screws 18-040, the washers 18-160, 18-175, the nuts 18-180 and the fire extinguisher 18-170.

NOTE: For further instructions, see CMMV 26-25-12_U3061 (fire extinguisher).

NOTE: For further instructions, see CMMV 26-25-36_U3061 (fire extinguisher).

(d) Remove and disassemble the waste chute 18-010 as follows:

1 Remove the screws 18-040 and the waste chute 18-010 from the waste-box console assembly 18-060.

(e) Remove the screws 18-150, the washers 18-160 and the waste-box console assembly 18-060 from the lavatory structure.

(f) Disassemble the waste-box console assembly 18-060 as follows:

1 Remove the screws 18-110, the washers 18-120, the nuts 18-130 and the cover 18-100.

SUB TASK 25-41-51-040-129-F01
D2549010509400 D2549010512200 D2549010600800 D2549020610200 D2549020612200 D2549020700000 D2549020705400 D2549020707400 D2549020708000

6. Removal and Disassembly of the Waste Bin, the Waste Chute and the Fire Extinguisher (18-1)

NOTE: **See TABLE 3567 for the references for the replacement procedures of permanent installed parts.**

More data for bonded parts are given in column SEE REPAIR TASK. Use the data for the selection of the related repair solution.

IPL FIG. ITEM	COMPONENT PART NAME	IPL FIG. ITEM	REPLACEMENT PART NAME	SEE REPAIR TASK
18-001 18-010	Waste Bin, Waste Chute and Fire Extinguisher Waste Chute	18-015	Section	Replacement of the Bonded Parts Material No. 08-026 Adhesive/ Sealant one Part, RTV Silicone Rubber
18-001 18-010	Waste Bin, Waste Chute and Fire Extinguisher Waste Chute	18-017	Support Fitting	Replacement of the Riveted Parts

Table 3567
Reference list for the replacement of permanent installed parts

18-001 18-060	Waste Bin, Waste Chute and Fire Extinguisher Waste-Box Console Assembly	18-080	Sliding Strip	Replacement of the Bonded Parts self adhesive
18-001 18-060	Waste Bin, Waste Chute and Fire Extinguisher Waste-Box Console Assembly	18-090	Hose Section	Replacement of the Bonded Parts Material No. 08-026 Adhesive/ Sealant one Part, RTV Silicone Rubber
18-001 18-060	Waste Bin, Waste Chute and Fire Extinguisher Waste-Box Console Assembly	18-123	Nut	Replacement of the Riveted Parts
18-001 18-060	Waste Bin, Waste Chute and Fire Extinguisher Waste-Box Console Assembly	18-125	Nut	Replacement of the Riveted Parts
18-001 18-060	Waste Bin, Waste Chute and Fire Extinguisher Waste-Box Console Assembly	18-140	Foam Self-Adhe-sive Tape	Replacement of the Bonded Parts Material No. 08-010A Epoxy Re-sin and Hardener Adhesive
18-001 18-010	Waste Bin, Waste Chute and Fire Extinguisher Waste Chute	18-260	Temperature Plate	Replacement of the Self-adhesive Placards

Table 3567
Reference list for the replacement of permanent installed parts

(b) Remove the waste container 18-050 from the waste-box console assembly 18-060.

(c) Remove the screws 18-040, the washers 18-160, 18-175, the nuts 18-180 and the fire extinguisher 18-170.

NOTE: For further instructions, see CMMV 26-25-04_61423 (fire extinguisher).

(d) Remove and disassemble the waste chute 18-010 as follows:

1 Remove the screws 18-040 and the waste chute 18-010 from the waste-box console assembly 18-060.

(e) Remove the screws 18-150, the washers 18-160 and the waste-box console assembly 18-060 from the lavatory structure.

(f) Disassemble the waste-box console assembly 18-060 as follows:

1 Remove the screws 18-110, the washers 18-120, the nuts 18-130 and the cover 18-100.

(g) Remove the screws 18-230, the washers 18-240, the nuts 18-250 and the door ejector assembly 18-270 from the waste-box console assembly 18-060.

(h) Disassemble the door ejector assembly 18-270 as follows:

WARNING: BE VERY CAREFUL WHEN YOU REMOVE OR INSTALL THE SPRING. BECAUSE THERE IS REMAINING TENSION IN THE SPRING, IT CAN CAUSE YOU INJURY.

1 Remove the hinge pin 18-300, the door ejector pin 18-290 and the spring 18-310 from the door ejector housing 18-280.

SUB TASK 25-41-51-040-129-G01
D2549010502400 D2549010505600 D2549010506800 D2549010507800 D2549020600400 D2549020601400 D2549020601600 D2549020602000 D2549020603000 R225401128-000 R225401133-000

7. Removal and Disassembly of the Waste Bin, the Waste Chute and the Fire Extinguisher (18-1)

NOTE: See TABLE 3568 for the references for the replacement procedures of permanent installed parts.

More data for bonded parts are given in column SEE REPAIR TASK. Use the data for the selection of the related repair solution.

IPL FIG. ITEM	COMPONENT PART NAME	IPL FIG. ITEM	REPLACEMENT PART NAME	SEE REPAIR TASK
18-001 18-060	Waste Bin, Waste Chute and Fire Extinguisher Waste-Box Console Assembly	18-080	Sliding Strip	Replacement of the Bonded Parts self adhesive
18-001 18-060	Waste Bin, Waste Chute and Fire Extinguisher Waste-Box Console Assembly	18-090	Hose Section	Replacement of the Bonded Parts Material No. 08-026 Adhesive/ Sealant one Part, RTV Silicone Rubber
18-001 18-060	Waste Bin, Waste Chute and Fire Extinguisher Waste-Box Console Assembly	18-140	Foam Self-Adhe-sive Tape	Replacement of the Bonded Parts Material No. 08-010A Epoxy Re-sin and Hardener Adhesive

Table 3568
Reference list for the replacement of permanent installed parts

(b) Remove the waste container 18-050 from the waste-box console assembly 18-060.

(c) Remove the screws 18-040, the washers 18-160, 18-175, the nuts 18-180 and the fire extinguisher 18-170.

NOTE: For further instructions, see CMMV 26-25-12_U3061 (fire extinguisher).

NOTE: For further instructions, see CMMV 26-25-36_U3061 (fire extinguisher).

(d) Remove and disassemble the waste chute 18-010 as follows:

1 Remove the screws 18-040, the nuts 18-020 and the waste chute 18-010 with the caps 18-030 from the waste-box console assembly 18-060.

(e) Remove the screws 18-150, the washers 18-160 and the waste-box console assembly 18-060 from the lavatory structure.

(f) Remove the screw 18-320, the washer 18-330, the nut 18-340 and the waste-box console assembly 18-060 from the lavatory structure.

(g) Disassemble the waste-box console assembly 18-060 as follows:

1 Remove the screws 18-110, the washers 18-120, the nuts 18-130 and the cover 18-100.

(h) Remove the screws 18-230, the washers 18-240, the nuts 18-250 and the door ejector assembly 18-190 from the waste-box console assembly 18-060.

(i) Disassemble the door ejector assembly 18-190 as follows:

1 Remove the bumper 18-210 and the shim 18-220 from the door ejector 18-200.

SUB TASK 25-41-51-040-129-H01

D2547160900200 D2547160900400 D2549010400000 D2549010400200
D2549010400400 D2549010400600 D2549010400800 D2549010401000
D2549010401400 D2549010401600 D2549010401800 D2549010402000
D2549010402200 D2549010402400 D2549010402600 D2549010402800
D2549010403000 D2549010403200 D2549010403400 D2549010403600
D2549010403800 D2549010404000 D2549010404200 D2549010404400
D2549010404600 D2549010404800 D2549010405000 D2549010405200
D2549010405400 D2549010405600 D2549010405800 D2549010406000
D2549010406200 D2549010406400 D2549010406800 D2549010407000
D2549010610600 D2549010610800 D2549010611000 D2549010611200
D2549010611400 D2549010611600 D2549010611800 D2549010612400
D2549010612600 D2549010613000 D2549010613200 D2549010613400
D2549010613600 D2549010613800 D2549010614200 D2549010614400
D2549010614600 D2549020300000 D2549020300400 D2549020300600
D2549020300800 D2549020301000 D2549020301600 D2549020301800
D2549020302000 D2549020302800 D2549020400000 D2549020400200
D2549020400400 D2549020400600 D2549020400800 D2549020401000
D2549020401200 D2549020401400 D2549020401600 D2549020402000
D2549020402200 D2549020402400 D2549020402600 D2549020403000
D2549020403200 D2549020403400 D2549020403600 D2549020403800
D2549020404000 D2549020404200 D2549020404400 D2549020404600
D2549020404800 D2549020405000 D2549020405200 D2549020405400
D2549020405600 D2549020405800 D2549020406000 D2549020406200
D2549020406400 D2549020406600 D2549020406800 D2549020407000
D2549020407200 D2549020407400 D2549020407600 D2549020407800
D2549020408000 D2549020408200 D2549020408600 D2549020408800
D2549020409000 D2549020409200 D2549020409400 D2549020409600
D2549020409800 D2549020410200 D2549020410400 D2549020410600
D2549020410800 D2549020411000 D2549020411200 D2549020411400
D2549020411600 D2549020411800 D2549020412000 D2549020412200

D2549020412400 D2549020412600 D2549020412800 D2549020413000
D2549020413200 D2549020413400 D2549020413600 D2549020413800
D2549020414000 D2549020414200 D2549020414600 D2549020414800
D2549020513800 D2549020801800 D2549020804200 D2549020804400
D2549020804800 D2549020805000 D2549020805200 D2549020805400
D2549020805600 D2549020805800 D2549020806000 D2549020806200
D2549020806400 D2549020806600 D2549020806800 D2549020807000
D2549020807200 D2549020807400 D2549020807800 D2549020808200
D2549020809600 D2549020809800 D2549020810000 D2549020810400
D2549020810600 D2549020810800 D2549020811200 D2549020811400
D2549020811600 D2549020811800 D2549020812000 D2549020812200
D2549020812400 D2549020812600 D2549020812800 D2549020813000
D2549020813200 D2549020813400 D2549020813600 D2549020813800
D2549020814000 D2549020814200 D2549020814400 D2549020814600
D2549020814800 D2549030400600 D2549030401000 D2549030401200
D2549030401400 D2549030401600 D2549030401800 D2549030402000
D2549030402200 D2549030404000 D2549030404200 D2549030404600
D2549030404800 D2549030405000 D2549030405600 D2549030405800
D2549030406000 D2549030406400 D2549030406600 D2549030406800
D2549030407000 D2549030407200 D2549030407400 D2549030407600
D2549030407800 D2549030408000 D2549030408200 D2549030408400
D2549030408600 D2549030409000 D2549030409200 D2549030409400
D2549030409600 D2549030409800 D2549030410000 D2549030410200
D2549030410400 D2549030410600 D2549030410800 D2549030411200
D2549030411400 D2549030411600 D2549030411800 D2549030412000
D2549030412200 D2549030412400 D2549030412600 D2549030412800
D2549030413000 D2549030413200 D2549030413400 D2549030413600
D2549030414000 D2549030414200 D2549030414400 D2549030414600
D2549030414800 D2549030614000 D2549030700000 D2549030700200
D2549030700400 D2549030700600 D2549030701000 D2549030701200
D2549030701400 D2549030701600 D2549030701800 D2549030702000
D2549030702200 D2549030702400 D2549030702600 D2549030702800
D2549030703000 D2549030703200 D2549030703400 D2549030703600
D2549030703800 D2549030704000 D2549030704200 D2549030704400
D2549030704800 D2549030705200 D2549030705600 D2549040500200
D2549040500400 D2549040500600 D2549040500800 D2549040501000
D2549040501200 D2549040501400 D2549040501600 D2549040501800
D2549040502000 R225401134-014 R225401134-034 R225401134-036 R225401134-
038 R225401136-004 R225401136-006 R225401136-008 R225401136-012 R225401136-
014 R225401136-018 R225401136-024 R225401145-010 R225401152-008 R225401152-
010 R225401168-012 R225401168-026 R225401183-004 R225401183-006 R225401196-
010 R225401196-012 R225401196-014 R225401196-016 R225401196-018 R225401196-
020 R225401196-022 R225401196-024 R225401196-040 R225401196-042 R225401196-
056 R225401196-058 R225401196-060 R225401196-062 R225401196-064 R225401196-
066 R225401196-068 R225401196-070 R225401199-000 R225401199-010 R225401199-
012 R225401602-000 R225401609-000 R225401611-000 R225401611-006
R225401611-012 R225401611-014 R225401611-016 R225401611-018 R225401611-020

R225401622-002 R225401624-000 R225401627-000 R225401627-002 R225401627-004 R225401639-000 R225401639-002 R225401643-000 R225401643-002 R225401643-004 R225401643-006 R225401643-008 R225401646-000 R225401646-002 R225401647-000 R225401648-000 R225401648-002 R225401648-004 R225401648-006 R225401648-008 R225401649-000 R225401656-000 R225401656-002 R225401658-000 R225401662-000 R225401662-002 R225401671-000 R225401671-002 R225401673-000 R225401673-002 R225401673-004 R225401673-006 R225401675-000 R225401676-000 R225401683-000 R225401685-000 R225401685-002 R225401688-000 R225401689-004 R225401689-006 R225401691-000 R225401691-002 R225401697-000 R225401697-002 R225401803-000 R225401803-002 R225401808-000 R225401811-000 R225401814-000

8. Removal and Disassembly of the Waste Bin, the Waste Chute and the Fire Extinguisher (18-1)

NOTE: **See TABLE 3569 for the references for the replacement procedures of permanent installed parts.**

More data for bonded parts are given in column SEE REPAIR TASK. Use the data for the selection of the related repair solution.

IPL FIG. ITEM	COMPONENT PART NAME	IPL FIG. ITEM	REPLACEMENT PART NAME	SEE REPAIR TASK
18-001 18-010	Waste Bin, Waste Chute and Fire Extinguisher Waste Chute	18-015	Section	Replacement of the Bonded Parts Material No. 08-026 Adhesive/ Sealant one Part, RTV Silicone Rubber
18-001 18-010	Waste Bin, Waste Chute and Fire Extinguisher Waste Chute	18-017	Support Fitting	Replacement of the Riveted Parts
18-001 18-060	Waste Bin, Waste Chute and Fire Extinguisher Waste-Box Console Assembly	18-080	Sliding Strip	Replacement of the Bonded Parts self adhesive

Table 3569
Reference list for the replacement of permanent installed parts

18-001 18-060	Waste Bin, Waste Chute and Fire Extinguisher Waste-Box Console Assembly	18-090	Hose Section	Replacement of the Bonded Parts Material No. 08-026 Adhesive/ Sealant one Part, RTV Silicone Rubber
18-001 18-060	Waste Bin, Waste Chute and Fire Extinguisher Waste-Box Console Assembly	18-123	Nut	Replacement of the Riveted Parts
18-001 18-060	Waste Bin, Waste Chute and Fire Extinguisher Waste-Box Console Assembly	18-125	Nut	Replacement of the Riveted Parts
18-001 18-060	Waste Bin, Waste Chute and Fire Extinguisher Waste-Box Console Assembly	18-140	Foam Self-Adhe-sive Tape	Replacement of the Bonded Parts Material No. 08-010A Epoxy Re-sin and Hardener Adhesive

Table 3569
Reference list for the replacement of permanent installed parts

(b) Remove the waste container 18-050 from the waste-box console assembly 18-060.

(c) Remove the screws 18-040, the washers 18-160, 18-175, the nuts 18-180 and the fire extinguisher 18-170.

NOTE: For further instructions, see CMMV 26-25-36_U3061 (fire extinguisher).

(d) Remove and disassemble the waste chute 18-010 as follows:

1 Remove the screws 18-040 and the waste chute 18-010 from the waste-box console assembly 18-060.

(e) Remove the screws 18-150, the washers 18-160 and the waste-box console assembly 18-060 from the lavatory structure.

(f) Disassemble the waste-box console assembly 18-060 as follows:

1 Remove the screws 18-110, the washers 18-120, the nuts 18-130 and the cover 18-100.

(g) Remove the screws 18-230, the washers 18-240, the nuts 18-250 and the door ejector assembly 18-270 from the waste-box console assembly 18-060.

(h) Disassemble the door ejector assembly 18-270 as follows:

WARNING: BE VERY CAREFUL WHEN YOU REMOVE OR INSTALL THE SPRING. BECAUSE THERE IS REMAINING TENSION IN THE SPRING, IT CAN CAUSE YOU INJURY.

1 Remove the hinge pin 18-300, the door ejector pin 18-290 and the spring 18-310 from the door ejector housing 18-280.

SUB TASK 25-41-51-040-129-J01
D2549020500000 D2549020500200 D2549020500600 D2549020501000 D2549020501400 D2549020502800 D2549020503200 D2549020504800 D2549020505200

9. Removal and Disassembly of the Waste Bin, the Waste Chute and the Fire Extinguisher (18-1)

NOTE: See TABLE 3570 for the references for the replacement procedures of permanent installed parts.

More data for bonded parts are given in column SEE REPAIR TASK. Use the data for the selection of the related repair solution.

IPL FIG. ITEM	COMPONENT PART NAME	IPL FIG. ITEM	REPLACEMENT PART NAME	SEE REPAIR TASK
18-001 18-060	Waste Bin, Waste Chute and Fire Extinguisher Waste-Box Console Assembly	18-080	Sliding Strip	Replacement of the Bonded Parts

Table 3570
Reference list for the replacement of permanent installed parts

				self adhesive
18-001 18-060	Waste Bin, Waste Chute and Fire Extinguisher Waste-Box Console Assembly	18-090	Hose Section	Replacement of the Bonded Parts Material No. 08-026 Adhesive/Sealant one Part, RTV Silicone Rubber
18-001 18-060	Waste Bin, Waste Chute and Fire Extinguisher Waste-Box Console Assembly	18-140	Foam Self-Adhesive Tape	Replacement of the Bonded Parts Material No. 08-010A Epoxy Resin and Hardener Adhesive

Table 3570
Reference list for the replacement of permanent installed parts

(b) Remove the waste container 18-050 from the waste-box console assembly 18-060.

(c) Remove the screws 18-040, the washers 18-160, 18-175, the nuts 18-180 and the fire extinguisher 18-170.

NOTE: For further instructions, see CMMV 26-25-12_U3061 (fire extinguisher).

NOTE: For further instructions, see CMMV 26-25-36_U3061 (fire extinguisher).

(d) Remove and disassemble the waste chute 18-010 as follows:

1 Remove the screws 18-040, the nuts 18-020 and the waste chute 18-010 with the caps 18-030 from the waste-box console assembly 18-060.

(e) Remove the screws 18-150, the washers 18-160 and the waste-box console assembly 18-060 from the lavatory structure.

(f) Disassemble the waste-box console assembly 18-060 as follows:

1 Remove the screws 18-110, the washers 18-120, the nuts 18-130 and the cover 18-100.

SUB TASK 25-41-51-040-129-K01
D2547161903000

10. Removal and Disassembly of the Waste Bin, the Waste Chute and the Fire Extinguisher (18-1)

NOTE: **See TABLE 3571 for the references for the replacement procedures of permanent installed parts.**

More data for bonded parts are given in column SEE REPAIR TASK. Use the data for the selection of the related repair solution.

IPL FIG. ITEM	COMPONENT PART NAME	IPL FIG. ITEM	REPLACEMENT PART NAME	SEE REPAIR TASK
18-001 18-010	Washbasin Unit Console Waste Chute	18-015	Section	Replacement of the Bonded Parts Material No. 08-026 Adhesive/ Sealant one Part, RTV Silicone Rubber
18-001 18-010	Washbasin Unit Console Waste Chute	18-017	Support Fitting	Replacement of the Riveted Parts
18-001 18-060	Washbasin Unit Console	18-080	Sliding Strip	Replacement of the Bonded Parts

Table 3571
Reference list for the replacement of permanent installed parts

	Waste-Box Console Assembly			self adhesive
18-001 18-060	Washbasin Unit Console Waste-Box Console Assembly	18-090	Hose Section	Replacement of the Bonded Parts Material No. 08-026 Adhesive/ Sealant one Part, RTV Silicone Rubber
18-001 18-060	Washbasin Unit Console Waste-Box Console Assembly	18-140	Foam Self-Adhesive Tape	Replacement of the Bonded Parts Material No. 08-010A Epoxy Resin and Hardener Adhesive

Table 3571
Reference list for the replacement of permanent installed parts

(b) Remove the waste container 18-050 from the waste-box console assembly 18-060.

(c) Remove the screws 18-040, the washers 18-160, 18-175, the nuts 18-180 and the fire extinguisher 18-170.

NOTE: For further instructions, see CMMV 26-25-12_U3061 (fire extinguisher).

NOTE: For further instructions, see CMMV 26-25-36_U3061 (fire extinguisher).

(d) Remove and disassemble the waste chute 18-010 as follows:

1 Remove the screws 18-040 and the waste chute 18-010 from the waste-box console assembly 18-060.

(e) Remove the screws 18-150, the washers 18-160 and the waste-box console assembly 18-060 from the lavatory structure.

(f) Remove the screw 18-320, the washer 18-330, the nut 18-340 and the waste-box console assembly 18-060 from the lavatory structure.

(g) Disassemble the waste-box console assembly 18-060 as follows:

1 Remove the screws 18-110, the washers 18-120, the nuts 18-130 and the cover 18-100.

(h) Remove the screws 18-230, the washers 18-240, the nuts 18-250 and the door ejector assembly 18-190 from the waste-box console assembly 18-060.

(i) Disassemble the door ejector assembly 18-190 as follows:

1 Remove the bumper 18-210 and the shim 18-220 from the door ejector 18-200.

TASK 25-41-51-000-815-B01
D2549020506000

162. Removal and Disassembly of the Waste Bin, the Waste Chute and the Fire Extinguisher

A. General

- Not applicable

B. Procedure

SUB TASK 25-41-51-000-106-A01

1. Removal and Disassembly of the Waste Bin, the Waste Chute and the Fire Extinguisher

(a) Not applicable.

TASK 25-41-51-000-816-A01
D2549010500000 D2549010500800 D2549010501200 D2549010502600 D2549010503800 D2549010506000 D2549010507600 D2549020603600 D2549020604000 D2549030500600 D2549030501400 D2549030503000

163. Removal and Disassembly of the Service Cabinet

A. General

A complete disassembly of the component is not necessary and not recommended.

Do not disassemble the component more than it is necessary for:

- Cleaning
- Visual Inspection
- Replacement of defective parts.

B. Job Set-up Information

(1) Not applicable

C. Procedure

WARNING: BE CAREFUL WHEN YOU USE SOLVENTS/CLEANING AGENTS, SEALANTS AND OTHER MATERIALS. OBEY THE MATERIAL MANUFACTURER'S INSTRUCTIONS AND THE LOCAL REGULATIONS. MAKE SURE THAT THERE IS A GOOD FLOW OF AIR THROUGH THE WORK AREA. DO NOT BREATHE THE FUMES. DO NOT SMOKE. DO NOT USE THESE MATERIALS NEAR A FLAME, SPARKS OR SOURCES OF HEAT. USE PROTECTIVE CLOTHING, GOGGLES AND GLOVES. IF YOU GET ONE OF THESE MATERIALS ON YOUR SKIN OR IN YOUR EYES, FLUSH IT AWAY WITH A FLOW OF CLEAN WATER. IF YOU GET ONE OF THESE MATERIALS IN YOUR MOUTH, GET IMMEDIATE MEDICAL AID. IN GENERAL, THESE MATERIALS ARE POISONOUS, FLAMMABLE AND SKIN IRRITANTS.

CAUTION: DO ALL THE WORK ON A CLEAN, SOFT SURFACE TO PREVENT DAMAGE TO THE COMPONENTS.

SUB TASK 25-41-51-040-040-A01
D2549020603600 D2549020604000

1. Removal and Disassembly of the Service Cabinet (19-1)

NOTE: **See TABLE 3572 for the references for the replacement procedures of permanent installed parts.**

More data for bonded parts are given in column SEE REPAIR TASK. Use the data for the selection of the related repair solution.

IPL FIG. ITEM	COMPONENT PART NAME	IPL FIG. ITEM	REPLACEMENT PART NAME	SEE REPAIR TASK
19-001 19-010 19-191	Service Cabinet Service Cabinet Assembly Angle Assembly	19-193 19-196	Angle Bumper	Replacement of the Bonded Parts self adhesive
19-001 19-220	Service Cabinet PSU Panel	19-223	Foil	Replacement of the Bonded Parts self adhesive
19-001 19-250	Service Cabinet Sign Housing	19-260	Lens	Replacement of the Bonded Parts self adhesive

Table 3572
Reference list for the replacement of permanent installed parts

(a) Remove and disassemble the service cabinet assembly 19-010 as follows:

1 Remove the screws 19-206, the washers 19-070, the nuts 19-150 and the block 19-205 from the upper part service cabinet assembly 19-020.

2 Remove the screws 19-202, the washers 19-203, the nuts 19-204 and the angle assemblies 19-191 from the center part service cabinet 19-030.

3 Remove the screws 19-060, the washers 19-070 and the upper part service cabinet assembly 19-020.

4 Remove the hinge pin 19-170 and the center part service cabinet 19-030 from the hinge 19-180.

5 Remove the screws 19-060, the washers 19-070 and the hinge 19-180 from the lavatory structure.

6 Remove the screws 19-200 and the lower part service cabinet 19-040 from the angle brackets 19-190.

7 Remove the screws 19-060, the washers 19-070 and the lower part service cabinet 19-040.

8 Remove the screws 19-090, the washers 19-070 and the angle brackets 19-190.

9 Remove the screws 19-060, the washers 19-070, the nuts 19-150 and the angles 19-120, 19-130 from the center part service cabinet 19-030.

10 Disassemble the angle 19-120 as follows:
- a Remove the screws 19-123, the washers 19-124, the nuts 19-125 and the part of the double-spring ball catch 19-122 from the angle 19-121.
- b Remove the screws 19-145 and the part of the double-spring ball catch 19-122 from the lavatory structure.

11 Disassemble the angle 19-130 as follows:
- a Remove the screws 19-133, the washers 19-134, the nuts 19-135 and the part of the double-spring ball catch 19-132 from the angle 19-131.
- b Remove the screws 19-145 and the part of the double-spring ball catch 19-132 from the lavatory structure.

(b) Remove and disassemble the PSU panel 19-220 as follows:

1 Disconnect the PSU panel 19-220 from the electrical supply.

2 Remove the screws 19-270 and the PSU panel 19-220 from the lower part service cabinet 19-040.

3 Remove the screws 19-240 and the shaver outlet 19-230 from the PSU panel 19-220.

4 Remove the front frame 19-225 from the PSU panel 19-220.

5 Remove the sign housing 19-250 and the printed circuit board PCB 19-280 from the PSU panel 19-220.

NOTE: For further instructions, see CMMV 33-26-06_DD704 (sign housing).

a Remove the housing assembly 19-255 from the sign housing 19-250.

b Remove the lamps 19-257 from the sign housing 19-250.

SUB TASK 25-41-51-040-040-B01
D2549030500600 D2549030501400 D2549030503000

2. Removal and Disassembly of the Service Cabinet (19-1)

NOTE: See TABLE 3573 for the references for the replacement procedures of permanent installed parts.
More data for bonded parts are given in column SEE REPAIR TASK. Use the data for the selection of the related repair solution.

IPL FIG. ITEM	COMPONENT PART NAME	IPL FIG. ITEM	REPLACEMENT PART NAME	SEE REPAIR TASK
19-001 19-010 19-191	Service Cabinet Service Cabinet Assembly Angle Assembly	19-193 19-196	Angle Bumper	Replacement of the Bonded Parts self adhesive
19-001 19-220	Service Cabinet PSU Panel	19-223	Foil	Replacement of the Bonded Parts self adhesive
19-001 19-250	Service Cabinet Sign Housing	19-260	Lens	Replacement of the Bonded Parts self adhesive

Table 3573
Reference list for the replacement of permanent installed parts

(a) Remove the service boxes 19-210 from the service cabinet assembly 19-010.

(b) Remove and disassemble the service cabinet assembly 19-010 as follows:

1 Remove the screws 19-206, the washers 19-070, the nuts 19-150 and the block 19-205 from the upper part service cabinet assembly 19-020.

2 Remove the screws 19-202, the washers 19-203, the nuts 19-204 and the angle assemblies 19-191 from the center part service cabinet 19-030.

3 Remove the screws 19-060, the washers 19-070 and the upper part service cabinet assembly 19-020.

4 Remove the hinge pin 19-170 and the center part service cabinet 19-030 from the hinge 19-180.

5 Remove the screws 19-060, the washers 19-070 and the hinge 19-180 from the lavatory structure.

6 Remove the screws 19-200 and the lower part service cabinet 19-040 from the angle brackets 19-190.

7 Remove the screws 19-060, the washers 19-070 and the lower part service cabinet 19-040.

8 Remove the screws 19-090, the washers 19-070 and the angle brackets 19-190.

9 Remove the screws 19-060, the washers 19-070, the nuts 19-150 and the angles 19-120, 19-130 from the center part service cabinet 19-030.

10 Disassemble the angle 19-120 as follows:
- a Remove the screws 19-123, the washers 19-124, the nuts 19-125 and the part of the double-spring ball catch 19-122 from the angle 19-121.
- b Remove the screws 19-145 and the part of the double-spring ball catch 19-122 from the lavatory structure.

11 Disassemble the angle 19-130 as follows:
- a Remove the screws 19-133, the washers 19-134, the nuts 19-135 and the part of the double-spring ball catch 19-132 from the angle 19-131.
- b Remove the screws 19-145 and the part of the double-spring ball catch 19-132 from the lavatory structure.

(c) Remove and disassemble the PSU panel 19-220 as follows:

1 Disconnect the PSU panel 19-220 from the electrical supply.

2 Remove the screws 19-270 and the PSU panel 19-220 from the lower part service cabinet 19-040.

3 Remove the screws 19-240 and the shaver outlet 19-230 from the PSU panel 19-220.

4 Remove the front frame 19-225 from the PSU panel 19-220.

5 Remove the sign housing 19-250 and the printed circuit board PCB 19-280 from the PSU panel 19-220.

NOTE: For further instructions, see CMMV 33-26-06_DD704 (sign housing).

a Remove the housing assembly 19-255 from the sign housing 19-250.
b Remove the lamps 19-257 from the sign housing 19-250.

SUB TASK 25-41-51-040-040-C01
D2549010500000 D2549010500800 D2549010501200 D2549010502600 D2549010503800 D2549010506000 D2549010507600

3. Removal and Disassembly of the Service Cabinet (19-1)

NOTE: See TABLE 3574 for the references for the replacement procedures of permanent installed parts.
More data for bonded parts are given in column SEE REPAIR TASK. Use the data for the selection of the related repair solution.

IPL FIG. ITEM	COMPONENT PART NAME	IPL FIG. ITEM	REPLACEMENT PART NAME	SEE REPAIR TASK
19-001 19-010 19-191	Service Cabinet Service Cabinet Assembly Angle Assembly	19-193 19-196	Angle Bumper	Replacement of the Bonded Parts self adhesive
19-001 19-220	Service Cabinet PSU Panel	19-223	Foil	Replacement of the Bonded Parts self adhesive
19-001 19-250	Service Cabinet Sign Housing	19-260	Lens	Replacement of the Bonded Parts self adhesive

Table 3574
Reference list for the replacement of permanent installed parts

(a) Remove the service boxes 19-210 from the service cabinet assembly 19-010.

(b) Remove and disassemble the service cabinet assembly 19-010 as follows:

1 Remove the screws 19-206, the washers 19-070, the nuts 19-150 and the block 19-205 from the upper part service cabinet assembly 19-020.

2 Remove the screws 19-202, the washers 19-203, the nuts 19-204 and the angle assemblies 19-191 from the center part service cabinet 19-030.

3 Remove the screws 19-060, the washers 19-070 and the upper part service cabinet assembly 19-020.

4 Remove the hinge pin 19-170 and the center part service cabinet 19-030 from the hinge 19-180.

5 Remove the screws 19-060, the washers 19-070 and the hinge 19-180 from the lavatory structure.

6 Remove the screws 19-200 and the lower part service cabinet 19-040 from the angle brackets 19-190.

7 Remove the screws 19-060, the washers 19-070 and the lower part service cabinet 19-040.

8 Remove the screws 19-090, the washers 19-070 and the angle brackets 19-190.

9 Remove the screws 19-060, 19-140, the washers 19-070 and the strip assembly 19-100 from the lavatory structure.

10 Remove the screws 19-060, the washers 19-070, the nuts 19-150 and the angles 19-120, 19-130 from the center part service cabinet 19-030.

11 Disassemble the angle 19-120 as follows:
- a Remove the screws 19-123, the washers 19-124, the nuts 19-125 and the part of the double-spring ball catch 19-122 from the angle 19-121.
- b Remove the part of the double-spring ball catch 19-122 from the lavatory structure.

12 Disassemble the angle 19-130 as follows:
- a Remove the screws 19-133, the washers 19-134, the nuts 19-135 and the part of the double-spring ball catch 19-132 from the angle 19-131.
- b Remove the part of the double-spring ball catch 19-132 from the lavatory structure.

(c) Remove and disassemble the PSU panel 19-220 as follows:

1 Disconnect the PSU panel 19-220 from the electrical supply.

2 Remove the screws 19-270 and the PSU panel 19-220 from the lower part service cabinet 19-040.

3 Remove the screws 19-240 and the shaver outlet 19-230 from the PSU panel 19-220.

4 Remove the front frame 19-225 from the PSU panel 19-220.

5 Remove the sign housing 19-250 and the printed circuit board PCB 19-280 from the PSU panel 19-220.

NOTE: For further instructions, see CMMV 33-26-06_DD704 (sign housing).

a Remove the housing assembly 19-255 from the sign housing 19-250.
b Remove the lamps 19-257 from the sign housing 19-250.

TASK 25-41-51-000-816-B01
D2547161903000 D2549010505600 D2549010507800 D2549020500200 D2549020600400 D2549020602800 D2549030502600 R225401128-000 R225401134-000 R225401188-006

164. Removal and Disassembly of the Service Cabinet

A. General

A complete disassembly of the component is not necessary and not recommended.

Do not disassemble the component more than it is necessary for:

- Cleaning
- Visual Inspection
- Replacement of defective parts.

B. Job Set-up Information

(1) Not applicable

C. Procedure

WARNING: BE CAREFUL WHEN YOU USE SOLVENTS/CLEANING AGENTS, SEALANTS AND OTHER MATERIALS. OBEY THE MATERIAL MANUFACTURER'S INSTRUCTIONS AND THE LOCAL REGULATIONS. MAKE SURE THAT THERE IS A GOOD FLOW OF AIR THROUGH THE WORK AREA. DO NOT BREATHE THE FUMES. DO NOT SMOKE. DO NOT USE THESE MATERIALS NEAR A FLAME, SPARKS OR SOURCES OF HEAT. USE PROTECTIVE CLOTHING, GOGGLES AND GLOVES. IF YOU GET ONE OF THESE MATERIALS ON YOUR SKIN OR IN YOUR EYES, FLUSH IT AWAY WITH A FLOW OF CLEAN WATER. IF YOU GET ONE OF THESE MATERIALS IN YOUR MOUTH, GET IMMEDIATE MEDICAL AID. IN GENERAL, THESE MATERIALS ARE POISONOUS, FLAMMABLE AND SKIN IRRITANTS.

CAUTION: DO ALL THE WORK ON A CLEAN, SOFT SURFACE TO PREVENT DAMAGE TO THE COMPONENTS.

SUB TASK 25-41-51-040-041-A01
D2547161903000 D2549010505600 D2549010507800 D2549020602800 R225401134-000

1. Removal and Disassembly of the Service Cabinet (19A-1)

NOTE: **See TABLE 3575 for the references for the replacement procedures of permanent installed parts.**

More data for bonded parts are given in column SEE REPAIR TASK. Use the data for the selection of the related repair solution.

IPL FIG. ITEM	COMPONENT PART NAME	IPL FIG. ITEM	REPLACEMENT PART NAME	SEE REPAIR TASK
19A-001 19A-010 19A-231	Service Cabinet Service Cabinet Assembly Angle Assembly	19A-233 19A-236	Angle Bumper	Replacement of the Bonded Parts self adhesive
19A-001 19A-270	Service Cabinet PSU Panel	19A-273	Foil	Replacement of the Bonded Parts self adhesive
19A-001 19A-300	Service Cabinet Sign Housing	19A-310	Lens	Replacement of the Bonded Parts self adhesive

Table 3575
Reference list for the replacement of permanent installed parts

(a) Remove the service box or the service box assembly 19A-260 from the service cabinet assembly 19A-010.

(b) Disassemble the service box or the service box assembly 19A-260 as follows:

1 Remove the drawer 19A-263 from the drawer guides 19A-264.

2 Remove the screws 19A-268 and the drawer guides 19A-264.

3 Remove the screws 19A-266, the handle 19A-267 and the handle holders 19A-265.

(c) Remove and disassemble the service cabinet assembly 19A-010 as follows:

1 Remove the screws 19A-246, the washers 19A-070, the nuts 19A-150 and the block 19A-245 from the upper part service cabinet assembly 19A-020.

2 Remove the screws 19A-242, the washers 19A-243, the nuts 19A-244 and the angle assemblies 19A-231 from the center part service cabinet 19A-030.

3 Remove the screws 19A-060, the washers 19A-070 and the upper part service cabinet assembly 19A-020.

4 Remove the hinge pin 19A-170 and the center part service cabinet 19A-030 from the hinge 19A-180.

5 Remove the screws 19A-060, the washers 19A-070 and the hinge 19A-180 from the lavatory structure.

6 Remove the soap dispenser assemblies 19A-230 from the chutes 19A-240.

7 Remove the chutes 19A-240 from the lower part service cabinet 19A-040.

8 Remove the screws 19A-200 and the lower part service cabinet 19A-040 from the angle brackets 19A-190.

9 Remove the screws 19A-060, the washers 19A-070 and the lower part service cabinet 19A-040.

10 Remove the screws 19A-090, the washers 19A-070 and the angle brackets 19A-190.

11 Remove the screws 19A-060, the washers 19A-070, the nuts 19A-150 and the angles 19A-120, 19A-130 from the center part service cabinet 19A-030.

12 Disassemble the angle 19A-120 as follows:
- a Remove the screws 19A-123, the washers 19A-124, the nuts 19A-125 and the part of the double-spring ball catch 19A-122 from the angle 19A-121.
- b Remove the screws 19A-110 and the part of the double-spring ball catch 19A-122 from the lavatory structure.

13 Disassemble the angle 19A-130 as follows:
- a Remove the screws 19A-133, the washers 19A-134, the nuts 19A-135 and the part of the double-spring ball catch 19A-132 from the angle 19A-131.

b Remove the screws 19A-110 and the part of the double-spring ball catch 19A-132 from the lavatory structure.

(d) Remove and disassemble the PSU panel 19A-270 as follows:

1 Disconnect the PSU panel 19A-270 from the electrical supply.

2 Remove the screws 19A-320 and the PSU panel 19A-270 from the lower part service cabinet 19A-040.

3 Remove the screws 19A-290 and the shaver outlet 19A-280 from the PSU panel 19A-270.

4 Remove the front frame 19A-275 from the PSU panel 19A-270.

5 Remove the sign housing 19A-300 and the printed circuit board PCB 19A-330 from the PSU panel 19A-270.

NOTE: For further instructions, see CMMV 33-26-06_DD704 (sign housing).

a Remove the housing assembly 19A-305 from the sign housing 19A-300.
b Remove the lamps 19A-307 from the sign housing 19A-300.

(e) Remove the label 19A-340.

SUB TASK 25-41-51-040-041-B01
D2549020500200 D2549020600400 R225401128-000

2. Removal and Disassembly of the Service Cabinet (19A-1)

NOTE: **See TABLE 3576 for the references for the replacement procedures of permanent installed parts.**

More data for bonded parts are given in column SEE REPAIR TASK. Use the data for the selection of the related repair solution.

IPL FIG. ITEM	COMPONENT PART NAME	IPL FIG. ITEM	REPLACEMENT PART NAME	SEE REPAIR TASK
19A-001 19A-010 19A-231	Service Cabinet Service Cabinet Assembly Angle Assembly	19A-233 19A-236	Angle Bumper	Replacement of the Bonded Parts self adhesive
19A-001 19A-270	Service Cabinet PSU Panel	19A-273	Foil	Replacement of the Bonded Parts self adhesive
19A-001 19A-300	Service Cabinet Sign Housing	19A-310	Lens	Replacement of the Bonded Parts self adhesive

Table 3576
Reference list for the replacement of permanent installed parts

(a) Remove the service box 19A-260 from the service cabinet assembly 19A-010.

(b) Remove and disassemble the service cabinet assembly 19A-010 as follows:

1 Remove the screws 19A-246, the washers 19A-070, the nuts 19A-150 and the block 19A-245 from the upper part service cabinet assembly 19A-020.

2 Remove the screws 19A-242, the washers 19A-243, the nuts 19A-244 and the angle assemblies 19A-231 from the center part service cabinet 19A-030.

3 Remove the screws 19A-060, the washers 19A-070 and the upper part service cabinet assembly 19A-020.

4 Remove the hinge pin 19A-170 and the center part service cabinet 19A-030 from the hinge 19A-180.

5 Remove the screws 19A-060, the washers 19A-070 and the hinge 19A-180 from the lavatory structure.

6 Remove the soap dispenser assemblies 19A-230 from the chutes 19A-240.

7 Remove the chutes 19A-240 from the lower part service cabinet 19A-040.

8 Remove the screws 19A-200 and the lower part service cabinet 19A-040 from the angle brackets 19A-190.

9 Remove the screws 19A-060, the washers 19A-070 and the lower part service cabinet 19A-040.

10 Remove the screws 19A-090, the washers 19A-070 and the angle brackets 19A-190.

11 Remove the screws 19A-060, the washers 19A-070, the nuts 19A-150 and the angles 19A-120, 19A-130 from the center part service cabinet 19A-030.

12 Disassemble the angle 19A-120 as follows:
- a Remove the screws 19A-123, the washers 19A-124, the nuts 19A-125 and the part of the double-spring ball catch 19A-122 from the angle 19A-121.
- b Remove the screws 19A-110 and the part of the double-spring ball catch 19A-122 from the lavatory structure.

13 Disassemble the angle 19A-130 as follows:
- a Remove the screws 19A-133, the washers 19A-134, the nuts 19A-135 and the part of the double-spring ball catch 19A-132 from the angle 19A-131.
- b Remove the screws 19A-110 and the part of the double-spring ball catch 19A-132 from the lavatory structure.

(c) Remove and disassemble the PSU panel 19A-270 as follows:

1 Disconnect the PSU panel 19A-270 from the electrical supply.

2 Remove the screws 19A-320 and the PSU panel 19A-270 from the lower part service cabinet 19A-040.

3 Remove the screws 19A-290 and the shaver outlet 19A-280 from the PSU panel 19A-270.

4 Remove the front frame 19A-275 from the PSU panel 19A-270.

5 Remove the sign housing 19A-300 and the printed circuit board PCB 19A-330 from the PSU panel 19A-270.

NOTE: For further instructions, see CMMV 33-26-06_DD704 (sign housing).

a Remove the housing assembly 19A-305 from the sign housing 19A-300.
b Remove the lamps 19A-307 from the sign housing 19A-300.

(d) If necessary, remove the label 19A-340 from the service cabinet assembly 19A-010.

SUB TASK 25-41-51-040-041-C01
D2549030502600 R225401188-006

3. Removal and Disassembly of the Service Cabinet (19A-1)

NOTE: See TABLE 3577 for the references for the replacement procedures of permanent installed parts.
More data for bonded parts are given in column SEE REPAIR TASK. Use the data for the selection of the related repair solution.

IPL FIG. ITEM	COMPONENT PART NAME	IPL FIG. ITEM	REPLACEMENT PART NAME	SEE REPAIR TASK
19A-001 19A-010 19A-231	Service Cabinet Service Cabinet Assembly Angle Assembly	19A-233 19A-236	Angle Bumper	Replacement of the Bonded Parts self adhesive

Table 3577
Reference list for the replacement of permanent installed parts

(a) Remove the service box or the service box assembly 19A-260 from the service cabinet assembly 19A-010.

(b) Disassemble the service box or the service box assembly 19A-260 as follows:

1 Remove the drawer 19A-263 from the drawer guides 19A-264.

2 Remove the screws 19A-268 and the drawer guides 19A-264.

3 Remove the screws 19A-266, the handle 19A-267 and the handle holders 19A-265.

(c) Remove and disassemble the service cabinet assembly 19A-010 as follows:

1 Remove the screws 19A-246, the washers 19A-070, the nuts 19A-150 and the block 19A-245 from the upper part service cabinet assembly 19A-020.

2 Remove the screws 19A-242, the washers 19A-243, the nuts 19A-244 and the angle assemblies 19A-231 from the center part service cabinet 19A-030.

3 Remove the screws 19A-060, the washers 19A-070 and the upper part service cabinet assembly 19A-020.

4 Remove the hinge pin 19A-170 and the center part service cabinet 19A-030 from the hinge 19A-180.

5 Remove the screws 19A-060, the washers 19A-070 and the hinge 19A-180 from the lavatory structure.

6 Remove the soap dispenser assemblies 19A-230 from the chutes 19A-240.

7 Remove the chutes 19A-240 from the lower part service cabinet 19A-040.

8 Remove the screws 19A-200 and the lower part service cabinet 19A-040 from the angle brackets 19A-190.

9 Remove the screws 19A-060, the washers 19A-070 and the lower part service cabinet 19A-040.

10 Remove the screws 19A-090, the washers 19A-070 and the angle brackets 19A-190.

11 Remove the screws 19A-060, the washers 19A-070, the nuts 19A-150 and the angles 19A-120, 19A-130 from the center part service cabinet 19A-030.

12 Disassemble the angle 19A-120 as follows:
- a Remove the screws 19A-123, the washers 19A-124, the nuts 19A-125 and the part of the double-spring ball catch 19A-122 from the angle 19A-121.
- b Remove the screws 19A-110 and the part of the double-spring ball catch 19A-122 from the lavatory structure.

13 Disassemble the angle 19A-130 as follows:
- a Remove the screws 19A-133, the washers 19A-134, the nuts 19A-135 and the part of the double-spring ball catch 19A-132 from the angle 19A-131.
- b Remove the screws 19A-110 and the part of the double-spring ball catch 19A-132 from the lavatory structure.

(d) If necessary, remove the label 19A-340 and the protective film 19A-350 from the service cabinet assembly 19A-010.

TASK 25-41-51-000-816-C01

D2549010500400 D2549010500600 D2549010501400 D2549010501600 D2549010502200 D2549010502400 D2549010502800 D2549010503200 D2549010503400 D2549010504200 D2549010504400 D2549010504600 D2549010504800 D2549010505000 D2549010505200 D2549010505400 D2549010505800 D2549010506200 D2549010506800 D2549010507000 D2549010507400 D2549010508000 D2549010508200 D2549010508400 D2549010508600 D2549010508800 D2549010509000 D2549010509200 D2549020500400 D2549020500800 D2549020501200 D2549020501800 D2549020502000 D2549020502400 D2549020502600 D2549020503000 D2549020503600 D2549020504000 D2549020504200 D2549020504400 D2549020504600 D2549020505000 D2549020600000 D2549020600200 D2549020600800 D2549020601000 D2549020601200 D2549020601400 D2549020601600 D2549020601800 D2549020602400 D2549020602600 D2549020603000 D2549020603200 D2549020603400 D2549020603800 D2549020606400 D2549020606600 D2549020607200 D2549030500400 D2549030500800 D2549030501000 D2549030501200 D2549030502000 D2549030502800 D2549030503400 D2549030503600 R225401115-002 R225401133-000 R225401139-000 R225401145-000 R225401146-000 R225401146-002 R225401188-000 R225401188-002 R225401188-004

165. Removal and Disassembly of the Service Cabinet

A. General

A complete disassembly of the component is not necessary and not recommended.

Do not disassemble the component more than it is necessary for:

- Cleaning
- Visual Inspection
- Replacement of defective parts.

B. Job Set-up Information

(1) Not applicable

C. Procedure

WARNING: **BE CAREFUL WHEN YOU USE SOLVENTS/CLEANING AGENTS, SEALANTS AND OTHER MATERIALS. OBEY THE MATERIAL MANUFACTURER'S INSTRUCTIONS AND THE LOCAL REGULATIONS. MAKE SURE THAT THERE IS A GOOD FLOW OF AIR THROUGH THE WORK AREA. DO NOT BREATHE THE FUMES. DO NOT SMOKE. DO NOT USE THESE MATERIALS NEAR A FLAME, SPARKS OR SOURCES OF HEAT. USE PROTECTIVE CLOTHING, GOGGLES AND GLOVES. IF YOU GET ONE OF THESE MATERIALS ON YOUR SKIN OR IN YOUR EYES, FLUSH IT AWAY WITH A FLOW OF CLEAN WATER. IF YOU GET ONE OF THESE MATERIALS IN YOUR MOUTH, GET IMMEDIATE MEDICAL AID. IN GENERAL, THESE MATERIALS ARE POISONOUS, FLAMMABLE AND SKIN IRRITANTS.**

CAUTION: **DO ALL THE WORK ON A CLEAN, SOFT SURFACE TO PREVENT DAMAGE TO THE COMPONENTS.**

SUB TASK 25-41-51-040-042-A01
D2549020501200 D2549020502400

1. Removal and Disassembly of the Service Cabinet (19B-1)

NOTE: **See TABLE 3578 for the references for the replacement procedures of permanent installed parts.**

More data for bonded parts are given in column SEE REPAIR TASK. Use the data for the selection of the related repair solution.

IPL FIG. ITEM	COMPONENT PART NAME	IPL FIG. ITEM	REPLACEMENT PART NAME	SEE REPAIR TASK
19B-001 19B-010 19B-191	Service Cabinet Service Cabinet Assembly Angle Assembly	19B-193 19B-196	Angle Bumper	Replacement of the Bonded Parts self adhesive
19B-001 19B-220	Service Cabinet PSU Panel	19B-223	Foil	Replacement of the Bonded Parts self adhesive
19B-001 19B-250	Service Cabinet Sign Housing	19B-260	Lens	Replacement of the Bonded Parts self adhesive

Table 3578
Reference list for the replacement of permanent installed parts

(a) Remove the service box 19B-210 from the service cabinet assembly 19B-010.

(b) Remove and disassemble the service cabinet assembly 19B-010 as follows:

1 Remove the screws 19B-202, the washers 19B-070, the nuts 19B-150 and the block 19B-201 from the upper part service cabinet assembly 19B-020.

2 Remove the screws 19B-204, the washers 19B-205, the nuts 19B-206 and the angle assemblies 19B-191 from the center part service cabinet 19B-030.

3 Remove the screws 19B-060, the washers 19B-070 and the upper part service cabinet assembly 19B-020.

4 Remove the hinge pin 19B-170 and the center part service cabinet 19B-030 from the hinge 19B-180.

5 Remove the screws 19B-060, the washers 19B-070 and the hinge 19B-180 from the lavatory structure.

6 Remove the screws 19B-200 and the lower part service cabinet 19B-040 from the angle brackets 19B-190.

7 Remove the screws 19B-060, the washers 19B-070 and the lower part service cabinet 19B-040.

8 Remove the screws 19B-090, the washers 19B-070 and the angle brackets 19B-190.

9 Remove the screws 19B-060, 19B-140, the washers 19B-070 and the strip assembly 19B-100 from the lavatory structure.

10 Remove the screws 19B-060, the washers 19B-070, the nuts 19B-150 and the angles 19B-120, 19B-130 from the center part service cabinet 19B-030.

11 Disassemble the angle 19B-120 as follows:
- a Remove the screws 19B-123, the washers 19B-124, the nuts 19B-125 and the part of the double-spring ball catch 19B-122 from the angle 19B-121.
- b Remove the part of the double-spring ball catch 19B-122 from the lavatory structure.

12 Disassemble the angle 19B-130 as follows:
- a Remove the screws 19B-133, the washers 19B-134, the nuts 19B-135 and the part of the double-spring ball catch 19B-132 from the angle 19B-131.
- b Remove the part of the double-spring ball catch 19B-132 from the lavatory structure.

(c) Remove and disassemble the PSU panel 19B-220 as follows:

1 Disconnect the PSU panel 19B-220 from the electrical supply.

2 Remove the screws 19B-270 and the PSU panel 19B-220 from the lower part service cabinet 19B-040.

3 Remove the screws 19B-240 and the shaver outlet 19B-230 from the PSU panel 19B-220.

4 Remove the front frame 19B-225 from the PSU panel 19B-220.

5 Remove the sign housing 19B-250 and the printed circuit board PCB 19B-280 from the PSU panel 19B-220.

NOTE: For further instructions, see CMMV 33-26-06_DD704 (sign housing).

a Remove the housing assembly 19B-255 from the sign housing 19B-250.
b Remove the lamps 19B-257 from the sign housing 19B-250.
c Remove the label 19B-290 and the protective film 19B-300 from the sign housing 19B-250.

SUB TASK 25-41-51-040-042-B01
D2549010500600 D2549010501400 D2549010502200 D2549010503200 D2549010504600 D2549010505200 D2549020500400 D2549020500800 D2549020501800 D2549020502000 R225401146-000 R225401146-002

2. Removal and Disassembly of the Service Cabinet (19B-1)

NOTE: **See TABLE 3579 for the references for the replacement procedures of permanent installed parts.**

More data for bonded parts are given in column SEE REPAIR TASK. Use the data for the selection of the related repair solution.

IPL FIG. ITEM	COMPONENT PART NAME	IPL FIG. ITEM	REPLACEMENT PART NAME	SEE REPAIR TASK
19B-001 19B-010 19B-191	Service Cabinet Service Cabinet Assembly Angle Assembly	19B-193 19B-196	Angle Bumper	Replacement of the Bonded Parts self adhesive
19B-001 19B-220	Service Cabinet PSU Panel	19B-223	Foil	Replacement of the Bonded Parts self adhesive
19B-001 19B-250	Service Cabinet Sign Housing	19B-260	Lens	Replacement of the Bonded Parts self adhesive

Table 3579
Reference list for the replacement of permanent installed parts

(a) Remove the service box or the service box assembly 19B-210 from the service cabinet assembly 19B-010.

(b) Disassemble the service box or the service box assembly 19B-210 as follows:

1 Remove the drawer 19B-213 from the drawer guides 19B-214.

2 Remove the screws 19B-218 and the drawer guides 19B-214.

3 Remove the screws 19B-216, the handle 19B-217 and the handle holders 19B-215.

(c) Remove and disassemble the service cabinet assembly 19B-010 as follows:

1 Remove the screws 19B-202, the washers 19B-070, the nuts 19B-150 and the block 19B-201 from the upper part service cabinet assembly 19B-020.

2 Remove the screws 19B-204, the washers 19B-205, the nuts 19B-206 and the angle assemblies 19B-191 from the center part service cabinet 19B-030.

3 Remove the screws 19B-060, the washers 19B-070 and the upper part service cabinet assembly 19B-020.

4 Remove the hinge pin 19B-170 and the center part service cabinet 19B-030 from the hinge 19B-180.

5 Remove the screws 19B-060, the washers 19B-070 and the hinge 19B-180 from the lavatory structure.

6 Remove the screws 19B-200 and the lower part service cabinet 19B-040 from the angle brackets 19B-190.

7 Remove the screws 19B-060, the washers 19B-070 and the lower part service cabinet 19B-040.

8 Remove the screws 19B-090, the washers 19B-070 and the angle brackets 19B-190.

9 Remove the screws 19B-060, 19B-140, the washers 19B-070 and the strip assembly 19B-100 from the lavatory structure.

10 Remove the screws 19B-060, the washers 19B-070, the nuts 19B-150 and the angles 19B-120, 19B-130 from the center part service cabinet 19B-030.

11 Disassemble the angle 19B-120 as follows:
- a Remove the screws 19B-123, the washers 19B-124, the nuts 19B-125 and the part of the double-spring ball catch 19B-122 from the angle 19B-121.
- b Remove the part of the double-spring ball catch 19B-122 from the lavatory structure.

12 Disassemble the angle 19B-130 as follows:
- a Remove the screws 19B-133, the washers 19B-134, the nuts 19B-135 and the part of the double-spring ball catch 19B-132 from the angle 19B-131.
- b Remove the part of the double-spring ball catch 19B-132 from the lavatory structure.

(d) Remove and disassemble the PSU panel 19B-220 as follows:

1 Disconnect the PSU panel 19B-220 from the electrical supply.

2 Remove the screws 19B-270 and the PSU panel 19B-220 from the lower part service cabinet 19B-040.

3 Remove the screws 19B-240 and the shaver outlet 19B-230 from the PSU panel 19B-220.

4 Remove the sign housing 19B-250 and the printed circuit board PCB 19B-280 from the PSU panel 19B-220.

NOTE: For further instructions, see CMMV 33-26-06_DD704 (sign housing).

a Remove the housing assembly 19B-255 from the sign housing 19B-250.
b Remove the lamps 19B-257 from the sign housing 19B-250.
c Remove the label 19B-290 and the protective film 19B-300 from the sign housing 19B-250.

SUB TASK 25-41-51-040-042-C01

D2549010504400 D2549010505000 D2549010505400 D2549010505800 D2549010506800 D2549010507400 D2549010508000 D2549010508200 D2549010508600 D2549010508800 D2549010509000 D2549010509200 D2549020503600 D2549020504000 D2549020504600 D2549020600000 D2549020600200 D2549020600800 D2549020601000 D2549020601200 D2549020601400 D2549020601600 D2549020601800 D2549020602400 D2549020602600 D2549020603000 D2549020603200 D2549020603400 D2549020603800 D2549020606400 D2549020606600 D2549020607200 D2549030500400 D2549030500800 D2549030501000 D2549030501200 D2549030502000 D2549030502800 D2549030503400 D2549030503600 R225401133-000 R225401139-000 R225401145-000 R225401188-000 R225401188-002 R225401188-004

3. Removal and Disassembly of the Service Cabinet (19B-1)

NOTE: **See TABLE 3580 for the references for the replacement procedures of permanent installed parts.**

More data for bonded parts are given in column SEE REPAIR TASK. Use the data for the selection of the related repair solution.

IPL FIG. ITEM	COMPONENT PART NAME	IPL FIG. ITEM	REPLACEMENT PART NAME	SEE REPAIR TASK
19B-001 19B-010 19B-191	Service Cabinet Service Cabinet Assembly Angle Assembly	19B-193 19B-196	Angle Bumper	Replacement of the Bonded Parts self adhesive
19B-001 19B-220	Service Cabinet PSU Panel	19B-223	Foil	Replacement of the Bonded Parts self adhesive
19B-001 19B-250	Service Cabinet Sign Housing	19B-260	Lens	Replacement of the Bonded Parts self adhesive

Table 3580
Reference list for the replacement of permanent installed parts

(a) Remove the service box or the service box assembly 19B-210 from the service cabinet assembly 19B-010.

(b) Disassemble the service box or the service box assembly 19B-210 as follows:

1 Remove the drawer 19B-213 from the drawer guides 19B-214.

2 Remove the screws 19B-218 and the drawer guides 19B-214.

3 Remove the screws 19B-216, the handle 19B-217 and the handle holders 19B-215.

(c) Remove and disassemble the service cabinet assembly 19B-010 as follows:

1 Remove the screws 19B-202, the washers 19B-070, the nuts 19B-150 and the block 19B-201 from the upper part service cabinet assembly 19B-020.

2 Remove the screws 19B-204, the washers 19B-205, the nuts 19B-206 and the angle assemblies 19B-191 from the center part service cabinet 19B-030.

3 Remove the screws 19B-060, the washers 19B-070 and the upper part service cabinet assembly 19B-020.

4 Remove the hinge pin 19B-170 and the center part service cabinet 19B-030 from the hinge 19B-180.

5 Remove the screws 19B-060, the washers 19B-070 and the hinge 19B-180 from the lavatory structure.

6 Remove the screws 19B-200 and the lower part service cabinet 19B-040 from the angle brackets 19B-190.

7 Remove the screws 19B-060, the washers 19B-070 and the lower part service cabinet 19B-040.

8 Remove the screws 19B-090, the washers 19B-070 and the angle brackets 19B-190.

9 Remove the screws 19B-060, the washers 19B-070, the nuts 19B-150 and the angles 19B-120, 19B-130 from the center part service cabinet 19B-030.

10 Disassemble the angle 19B-120 as follows:
- a Remove the screws 19B-123, the washers 19B-124, the nuts 19B-125 and the part of the double-spring ball catch 19B-122 from the angle 19B-121.
- b Remove the screws 19B-145 and the part of the double-spring ball catch 19B-122 from the lavatory structure.

11 Disassemble the angle 19B-130 as follows:
- a Remove the screws 19B-133, the washers 19B-134, the nuts 19B-135 and the part of the double-spring ball catch 19B-132 from the angle 19B-131.
- b Remove the screws 19B-145 and the part of the double-spring ball catch 19B-132 from the lavatory structure.

(d) Remove and disassemble the PSU panel 19B-220 as follows:

1 Disconnect the PSU panel 19B-220 from the electrical supply.

2 Remove the screws 19B-270 and the PSU panel 19B-220 from the lower part service cabinet 19B-040.

3 Remove the screws 19B-240 and the shaver outlet 19B-230 from the PSU panel 19B-220.

4 Remove the front frame 19B-225 from the PSU panel 19B-220.

5 Remove the sign housing 19B-250 and the printed circuit board PCB 19B-280 from the PSU panel 19B-220.

NOTE: For further instructions, see CMMV 33-26-06_DD704 (sign housing).

a Remove the housing assembly 19B-255 from the sign housing 19B-250.
b Remove the lamps 19B-257 from the sign housing 19B-250.

(e) Remove the label 19B-290 and the protective film 19B-300.

SUB TASK 25-41-51-040-042-D01
D2549010500400 D2549010501600 D2549010502400 D2549010502800 D2549010503400 D2549010506200 D2549010507000

4. Removal and Disassembly of the Service Cabinet (19B-1)

NOTE: **See TABLE 3581 for the references for the replacement procedures of permanent installed parts.**

More data for bonded parts are given in column SEE REPAIR TASK. Use the data for the selection of the related repair solution.

IPL FIG. ITEM	COMPONENT PART NAME	IPL FIG. ITEM	REPLACEMENT PART NAME	SEE REPAIR TASK
19B-001 19B-010 19B-191	Service Cabinet Service Cabinet Assembly Angle Assembly	19B-193 19B-196	Angle Bumper	Replacement of the Bonded Parts self adhesive
19B-001 19B-220	Service Cabinet PSU Panel	19B-223	Foil	Replacement of the Bonded Parts self adhesive
19B-001 19B-250	Service Cabinet Sign Housing	19B-260	Lens	Replacement of the Bonded Parts self adhesive

Table 3581
Reference list for the replacement of permanent installed parts

(a) Remove the service box or the service box assembly 19B-210 from the service cabinet assembly 19B-010.

(b) Disassemble the service box or the service box assembly 19B-210 as follows:

1 Remove the drawer 19B-213 from the drawer guides 19B-214.

2 Remove the screws 19B-218 and the drawer guides 19B-214.

3 Remove the screws 19B-216, the handle 19B-217 and the handle holders 19B-215.

(c) Remove and disassemble the service cabinet assembly 19B-010 as follows:

1 Remove the screws 19B-202, the washers 19B-070, the nuts 19B-150 and the block 19B-201 from the upper part service cabinet assembly 19B-020.

2 Remove the screws 19B-204, the washers 19B-205, the nuts 19B-206 and the angle assemblies 19B-191 from the center part service cabinet 19B-030.

3 Remove the screws 19B-060, the washers 19B-070 and the upper part service cabinet assembly 19B-020.

4 Remove the hinge pin 19B-170 and the center part service cabinet 19B-030 from the hinge 19B-180.

5 Remove the screws 19B-060, the washers 19B-070 and the hinge 19B-180 from the lavatory structure.

6 Remove the soap dispenser assemblies 19B-041 from the chutes 19B-042.

7 Remove the chutes 19B-042 from the lower part service cabinet 19B-040.

8 Remove the screws 19B-200 and the lower part service cabinet 19B-040 from the angle brackets 19B-190.

9 Remove the screws 19B-060, the washers 19B-070 and the lower part service cabinet 19B-040.

10 Remove the screws 19B-090, the washers 19B-070 and the angle brackets 19B-190.

11 Remove the screws 19B-060, 19B-140, the washers 19B-070 and the strip assembly 19B-100 from the lavatory structure.

12 Remove the screws 19B-060, the washers 19B-070, the nuts 19B-150 and the angles 19B-120, 19B-130 from the center part service cabinet 19B-030.

13 Disassemble the angle 19B-120 as follows:
- a Remove the screws 19B-123, the washers 19B-124, the nuts 19B-125 and the part of the double-spring ball catch 19B-122 from the angle 19B-121.
- b Remove the part of the double-spring ball catch 19B-122 from the lavatory structure.

14 Disassemble the angle 19B-130 as follows:

a Remove the screws 19B-133, the washers 19B-134, the nuts 19B-135 and the part of the double-spring ball catch 19B-132 from the angle 19B-131.
b Remove the part of the double-spring ball catch 19B-132 from the lavatory structure.

(d) Remove and disassemble the PSU panel 19B-220 as follows:

1 Disconnect the PSU panel 19B-220 from the electrical supply.

2 Remove the screws 19B-270 and the PSU panel 19B-220 from the lower part service cabinet 19B-040.

3 Remove the screws 19B-240 and the shaver outlet 19B-230 from the PSU panel 19B-220.

4 Remove the front frame or the front frame assembly 19B-225 from the PSU panel 19B-220.

5 Remove the sign housing 19B-250 and the printed circuit board PCB 19B-280 from the PSU panel 19B-220.

NOTE: For further instructions, see CMMV 33-26-06_DD704 (sign housing).

a Remove the housing assembly 19B-255 from the sign housing 19B-250.
b Remove the lamps 19B-257 from the sign housing 19B-250.
c Remove the label 19B-290 and the protective film 19B-300 from the sign housing 19B-250.

SUB TASK 25-41-51-040-042-E01
D2549010504200 D2549010504800 D2549010508400

5. Removal and Disassembly of the Service Cabinet (19B-1)

NOTE: **See TABLE 3582 for the references for the replacement procedures of permanent installed parts.**

More data for bonded parts are given in column SEE REPAIR TASK. Use the data for the selection of the related repair solution.

IPL FIG. ITEM	COMPONENT PART NAME	IPL FIG. ITEM	REPLACEMENT PART NAME	SEE REPAIR TASK
19B-001 19B-010 19B-191	Service Cabinet Service Cabinet Assembly Angle Assembly	19B-193 19B-196	Angle Bumper	Replacement of the Bonded Parts self adhesive
19B-001 19B-220	Service Cabinet PSU Panel	19B-223	Foil	Replacement of the Bonded Parts self adhesive
19B-001 19B-250	Service Cabinet Sign Housing	19B-260	Lens	Replacement of the Bonded Parts self adhesive

Table 3582
Reference list for the replacement of permanent installed parts

(a) Remove the service box or the service box assembly 19B-210 from the service cabinet assembly 19B-010.

(b) Disassemble the service box or the service box assembly 19B-210 as follows:

1 Remove the drawer 19B-213 from the drawer guides 19B-214.

2 Remove the screws 19B-218 and the drawer guides 19B-214.

3 Remove the screws 19B-216, the handle 19B-217 and the handle holders 19B-215.

(c) Remove and disassemble the service cabinet assembly 19B-010 as follows:

1 Remove the screws 19B-202, the washers 19B-070, the nuts 19B-150 and the block 19B-201 from the upper part service cabinet assembly 19B-020.

2 Remove the screws 19B-204, the washers 19B-205, the nuts 19B-206 and the angle assemblies 19B-191 from the center part service cabinet 19B-030.

3 Remove the screws 19B-060, the washers 19B-070 and the upper part service cabinet assembly 19B-020.

4 Remove the hinge pin 19B-170 and the center part service cabinet 19B-030 from the hinge 19B-180.

5 Remove the screws 19B-060, the washers 19B-070 and the hinge 19B-180 from the lavatory structure.

6 Remove the screws 19B-200 and the lower part service cabinet 19B-040 from the angle brackets 19B-190.

7 Remove the screws 19B-060, the washers 19B-070 and the lower part service cabinet 19B-040.

8 Remove the screws 19B-090, the washers 19B-070 and the angle brackets 19B-190.

9 Remove the screws 19B-060, the washers 19B-070, the nuts 19B-150 and the angles 19B-120, 19B-130 from the center part service cabinet 19B-030.

10 Disassemble the angle 19B-120 as follows:
- a Remove the screws 19B-123, the washers 19B-124, the nuts 19B-125 and the part of the double-spring ball catch 19B-122 from the angle 19B-121.
- b Remove the screws 19B-145 and the part of the double-spring ball catch 19B-122 from the lavatory structure.

11 Disassemble the angle 19B-130 as follows:
- a Remove the screws 19B-133, the washers 19B-134, the nuts 19B-135 and the part of the double-spring ball catch 19B-132 from the angle 19B-131.
- b Remove the screws 19B-145 and the part of the double-spring ball catch 19B-132 from the lavatory structure.

(d) Remove and disassemble the PSU panel 19B-220 as follows:

1 Disconnect the PSU panel 19B-220 from the electrical supply.

2 Remove the screws 19B-270 and the PSU panel 19B-220 from the lower part service cabinet 19B-040.

3 Remove the screws 19B-240 and the shaver outlet 19B-230 from the PSU panel 19B-220.

4 Remove the sign housing 19B-250 and the printed circuit board PCB 19B-280 from the PSU panel 19B-220.

NOTE: For further instructions, see CMMV 33-26-06_DD704 (sign housing).

a Remove the housing assembly 19B-255 from the sign housing 19B-250.
b Remove the lamps 19B-257 from the sign housing 19B-250.
c Remove the label 19B-290 and the protective film 19B-300 from the sign housing 19B-250.

SUB TASK 25-41-51-040-042-F01
D2549020502600 D2549020503000 D2549020504200 D2549020504400 D2549020505000 R225401115-002

6. Removal and Disassembly of the Service Cabinet (19B-1)

NOTE: **See TABLE 3583 for the references for the replacement procedures of permanent installed parts.**

More data for bonded parts are given in column SEE REPAIR TASK. Use the data for the selection of the related repair solution.

IPL FIG. ITEM	COMPONENT PART NAME	IPL FIG. ITEM	REPLACEMENT PART NAME	SEE REPAIR TASK
19B-001 19B-010 19B-191	Service Cabinet Service Cabinet Assembly Angle Assembly	19B-193 19B-196	Angle Bumper	Replacement of the Bonded Parts self adhesive
19B-001 19B-220	Service Cabinet PSU Panel	19B-223	Foil	Replacement of the Bonded Parts self adhesive
19B-001 19B-250	Service Cabinet Sign Housing	19B-260	Lens	Replacement of the Bonded Parts self adhesive

Table 3583
Reference list for the replacement of permanent installed parts

(a) Remove the service box or the service box assembly 19B-210 from the service cabinet assembly 19B-010.

(b) Disassemble the service box or the service box assembly 19B-210 as follows:

1 Remove the drawer 19B-213 from the drawer guides 19B-214.

2 Remove the screws 19B-218 and the drawer guides 19B-214.

3 Remove the screws 19B-216, the handle 19B-217 and the handle holders 19B-215.

(c) Remove and disassemble the service cabinet assembly 19B-010 as follows:

1 Remove the screws 19B-202, the washers 19B-070, the nuts 19B-150 and the block 19B-201 from the upper part service cabinet assembly 19B-020.

2 Remove the screws 19B-204, the washers 19B-205, the nuts 19B-206 and the angle assemblies 19B-191 from the center part service cabinet 19B-030.

3 Remove the screws 19B-060, the washers 19B-070 and the upper part service cabinet assembly 19B-020.

4 Remove the hinge pin 19B-170 and the center part service cabinet 19B-030 from the hinge 19B-180.

5 Remove the screws 19B-060, the washers 19B-070 and the hinge 19B-180 from the lavatory structure.

6 Remove the screws 19B-200 and the lower part service cabinet 19B-040 from the angle brackets 19B-190.

7 Remove the screws 19B-060, the washers 19B-070 and the lower part service cabinet 19B-040.

8 Remove the screws 19B-090, the washers 19B-070 and the angle brackets 19B-190.

9 Remove the screws 19B-060, 19B-140, the washers 19B-070 and the strip assembly 19B-100 from the lavatory structure.

10 Remove the screws 19B-060, the washers 19B-070, the nuts 19B-150 and the angles 19B-120, 19B-130 from the center part service cabinet 19B-030.

11 Disassemble the angle 19B-120 as follows:
- a Remove the screws 19B-123, the washers 19B-124, the nuts 19B-125 and the part of the double-spring ball catch 19B-122 from the angle 19B-121.
- b Remove the part of the double-spring ball catch 19B-122 from the lavatory structure.

12 Disassemble the angle 19B-130 as follows:
- a Remove the screws 19B-133, the washers 19B-134, the nuts 19B-135 and the part of the double-spring ball catch 19B-132 from the angle 19B-131.
- b Remove the part of the double-spring ball catch 19B-132 from the lavatory structure.

(d) Remove and disassemble the PSU panel 19B-220 as follows:

1 Disconnect the PSU panel 19B-220 from the electrical supply.

2 Remove the screws 19B-270 and the PSU panel 19B-220 from the lower part service cabinet 19B-040.

3 Remove the screws 19B-240 and the shaver outlet 19B-230 from the PSU panel 19B-220.

4 Remove the front frame 19B-225 from the PSU panel 19B-220.

5 Remove the sign housing 19B-250 and the printed circuit board PCB 19B-280 from the PSU panel 19B-220.

NOTE: For further instructions, see CMMV 33-26-06_DD704 (sign housing).

a Remove the housing assembly 19B-255 from the sign housing 19B-250.
b Remove the lamps 19B-257 from the sign housing 19B-250.

(e) Remove the label 19B-290 and the protective film 19B-300.

TASK 25-41-51-000-816-D01
D2549010501000 D2549010501800 D2549010502000 D2549010503600 D2549010506400 D2549010507200 D2549010511200 D2549020501600 D2549020503400 D2549020503800 D2549020505400 D2549020505800 D2549030500200 D2549030501600 D2549030502200 D2549030503200 R225401107-000 R225401107-002

166. Removal and Disassembly of the Service Cabinet

A. General

A complete disassembly of the component is not necessary and not recommended.

Do not disassemble the component more than it is necessary for:

- Cleaning
- Visual Inspection
- Replacement of defective parts.

B. Job Set-up Information

(1) Not applicable

C. Procedure

WARNING: BE CAREFUL WHEN YOU USE SOLVENTS/CLEANING AGENTS, SEALANTS AND OTHER MATERIALS. OBEY THE MATERIAL MANUFACTURER'S INSTRUCTIONS AND THE LOCAL REGULATIONS. MAKE SURE THAT THERE IS A GOOD FLOW OF AIR THROUGH THE WORK AREA. DO NOT BREATHE THE FUMES. DO NOT SMOKE. DO NOT USE THESE MATERIALS NEAR A FLAME, SPARKS OR SOURCES OF HEAT. USE PROTECTIVE CLOTHING, GOGGLES AND GLOVES. IF YOU GET ONE OF THESE MATERIALS ON YOUR SKIN OR IN YOUR EYES, FLUSH IT AWAY WITH A FLOW OF CLEAN WATER. IF YOU GET ONE OF THESE MATERIALS IN YOUR MOUTH, GET IMMEDIATE MEDICAL AID. IN GENERAL, THESE MATERIALS ARE POISONOUS, FLAMMABLE AND SKIN IRRITANTS.

CAUTION: DO ALL THE WORK ON A CLEAN, SOFT SURFACE TO PREVENT DAMAGE TO THE COMPONENTS.

SUB TASK 25-41-51-040-043-A01
1. Removal and Disassembly of the Service Cabinet (19C-1)

NOTE: **See TABLE 3584 for the references for the replacement procedures of permanent installed parts.**

More data for bonded parts are given in column SEE REPAIR TASK. Use the data for the selection of the related repair solution.

IPL FIG. ITEM	COMPONENT PART NAME	IPL FIG. ITEM	REPLACEMENT PART NAME	SEE REPAIR TASK
19C-001 19C-010 19C-220	Service Cabinet Service Cabinet Assembly Angle Assembly	19C-223 19C-226	Angle Bumper	Replacement of the Bonded Parts self adhesive
19C-001 19C-270	Service Cabinet PSU Panel	19C-273	Foil	Replacement of the Bonded Parts self adhesive
19C-001 19C-300	Service Cabinet Sign Housing	19C-310	Lens	Replacement of the Bonded Parts self adhesive

Table 3584
Reference list for the replacement of permanent installed parts

(a) Remove the service box or the service box assembly 19C-260 from the service cabinet assembly 19C-010.

(b) Disassemble the service box or the service box assembly 19C-260 as follows:

1 Remove the drawer 19C-263 from the drawer guides 19C-264.

2 Remove the screws 19C-268 and the drawer guides 19C-264.

3 Remove the screws 19C-266, the handle 19C-267 and the handle holders 19C-265.

(c) Remove and disassemble the service cabinet assembly 19C-010 as follows:

1 Remove the screws 19C-258, the washers 19C-070, the nuts 19C-150 and the block 19C-210 from the upper part service cabinet assembly 19C-020.

2 Remove the screws 19C-253, the washers 19C-255, the nuts 19C-257 and the angle assemblies 19C-220 from the center part service cabinet 19C-030.

3 Remove the screws 19C-060, the washers 19C-070 and the upper part service cabinet assembly 19C-020.

4 Remove the hinge pin 19C-170 and the center part service cabinet 19C-030 from the hinge 19C-180.

5 Remove the screws 19C-060, the washers 19C-070 and the hinge 19C-180 from the lavatory structure.

6 Remove the soap dispenser assemblies 19C-230 from the chutes 19C-240.

7 Remove the chutes 19C-240 from the lower part service cabinet 19C-040.

8 Remove the screws 19C-200 and the lower part service cabinet 19C-040 from the angle brackets 19C-190.

9 Remove the screws 19C-060, the washers 19C-070 and the lower part service cabinet 19C-040.

10 Remove the screws 19C-090, the washers 19C-070 and the angle brackets 19C-190.

11 Remove the screws 19C-060, 19C-140, the washers 19C-070 and the strip assembly 19C-100 from the lavatory structure.

12 Remove the screws 19C-060, the washers 19C-070, the nuts 19C-150 and the angles 19C-120, 19C-130 from the center part service cabinet 19C-030.

13 Disassemble the angle 19C-120 as follows:
   a Remove the screws 19C-123, the washers 19C-124, the nuts 19C-125 and the part of the double-spring ball catch 19C-122 from the angle 19C-121.

14 Disassemble the angle 19C-130 as follows:

a Remove the screws 19C-133, the washers 19C-134, the nuts 19C-135 and the part of the double-spring ball catch 19C-132 from the angle 19C-131.

(d) Remove and disassemble the PSU panel 19C-270 as follows:

1 Disconnect the PSU panel 19C-270 from the electrical supply.

2 Remove the screws 19C-320 and the PSU panel 19C-270 from the lower part service cabinet 19C-040.

3 Remove the screws 19C-290 and the shaver outlet 19C-280 from the PSU panel 19C-270.

4 Remove the front frame 19C-275 from the PSU panel 19C-270.

5 Remove the sign housing 19C-300 and the printed circuit board PCB 19C-330 from the PSU panel 19C-270.

NOTE: For further instructions, see CMMV 33-26-06_DD704 (sign housing).

a Remove the housing assembly 19C-305 from the sign housing 19C-300.
b Remove the lamps 19C-307 from the sign housing 19C-300.

(e) Remove the label 19C-340.

TASK 25-41-51-000-816-E01
D2549020500000 D2549020500600 D2549020501000 D2549020501400 D2549020502800 D2549020503200 D2549020504800 D2549020505200 D2549020506000 D2549020602000 D2549030501800 D2549030502400

167. Removal and Disassembly of the Service Cabinet

A. General

A complete disassembly of the component is not necessary and not recommended.

Do not disassemble the component more than it is necessary for:

- Cleaning
- Visual Inspection
- Replacement of defective parts.

B. Job Set-up Information

(1) Not applicable

C. Procedure

WARNING: BE CAREFUL WHEN YOU USE SOLVENTS/CLEANING AGENTS, SEALANTS AND OTHER MATERIALS. OBEY THE MATERIAL MANUFACTURER'S INSTRUCTIONS AND THE LOCAL REGULATIONS. MAKE SURE THAT THERE IS A GOOD FLOW OF AIR THROUGH THE WORK AREA. DO NOT BREATHE THE FUMES. DO NOT SMOKE. DO NOT USE THESE MATERIALS NEAR A FLAME, SPARKS OR SOURCES OF HEAT. USE PROTECTIVE CLOTHING, GOGGLES AND GLOVES. IF YOU GET ONE OF THESE MATERIALS ON YOUR SKIN OR IN YOUR EYES, FLUSH IT AWAY WITH A FLOW OF CLEAN WATER. IF YOU GET ONE OF THESE MATERIALS IN YOUR MOUTH, GET IMMEDIATE MEDICAL AID. IN GENERAL, THESE MATERIALS ARE POISONOUS, FLAMMABLE AND SKIN IRRITANTS.

CAUTION: DO ALL THE WORK ON A CLEAN, SOFT SURFACE TO PREVENT DAMAGE TO THE COMPONENTS.

SUB TASK 25-41-51-040-044-A01
D2549020500000 D2549020500600 D2549020501000 D2549020501400 D2549020502800 D2549020503200 D2549020504800 D2549020506000

1. Removal and Disassembly of the Service Cabinet (19D-1)

NOTE: **See TABLE 3585 for the references for the replacement procedures of permanent installed parts.**

More data for bonded parts are given in column SEE REPAIR TASK. Use the data for the selection of the related repair solution.

IPL FIG. ITEM	COMPONENT PART NAME	IPL FIG. ITEM	REPLACEMENT PART NAME	SEE REPAIR TASK
19D-001 19D-010 19D-300	Service Cabinet Service Cabinet Assembly Angle Assembly	19D-303 19D-306	Angle Bumper	Replacement of the Bonded Parts self adhesive
19D-001 19D-380	Service Cabinet PSU Panel	19D-390	Foil	Replacement of the Bonded Parts self adhesive
19D-001 19D-410	Service Cabinet Sign Housing	19D-440	Lens	Replacement of the Bonded Parts self adhesive

Table 3585
Reference list for the replacement of permanent installed parts

(a) Remove the service box 19D-370 from the service cabinet assembly 19D-010.

(b) Remove and disassemble the service cabinet assembly 19D-010 as follows:

1 Remove the screws 19D-350, the washers 19D-060, the nuts 19D-230 and the block 19D-340 from the upper part service cabinet assembly 19D-020.

2 Remove the screws 19D-310, the washers 19D-320, the nuts 19D-330 and the angle assemblies 19D-300 from the center part service cabinet 19D-030.

3 Remove the screws 19D-050, the washers 19D-060 and the upper part service cabinet assembly 19D-020.

4 Remove the hinge pin 19D-240 and the center part service cabinet 19D-030 from the hinge 19D-250.

5 Remove the screws 19D-050, the washers 19D-060 and the hinge 19D-250 from the lavatory structure.

6 Remove the soap dispenser assemblies 19D-280 from the chutes 19D-290.

7 Remove the chutes 19D-290 from the lower part service cabinet 19D-040.

8 Remove the screws 19D-270 and the lower part service cabinet 19D-040 from the angle brackets 19D-260.

9 Remove the screws 19D-050, the washers 19D-060 and the lower part service cabinet 19D-040.

10 Remove the screws 19D-070, the washers 19D-060 and the angle brackets 19D-260.

11 Remove the screws 19D-050, 19D-220, the washers 19D-060 and the strip assembly 19D-080.

12 Remove the screws 19D-050, the washers 19D-060, the nuts 19D-230 and the angles 19D-100, 19D-160 from the center part service cabinet 19D-030.

13 Disassemble the angle 19D-100 as follows:
- a Remove the screws 19D-130, the washers 19D-140, the nuts 19D-150 and the part of the double-spring ball catch 19D-120 from the angle 19D-110.
- b Remove the part of the double-spring ball catch 19D-120 from the lavatory structure.

14 Disassemble the angle 19D-160 as follows:
- a Remove the screws 19D-190, the washers 19D-200, the nuts 19D-210 and the part of the double-spring ball catch 19D-180 from the angle 19D-170.
- b Remove the part of the double-spring ball catch 19D-180 from the lavatory structure.

(c) Remove and disassemble the PSU panel 19D-380 as follows:

1 Disconnect the PSU panel 19D-380 from the electrical supply.

2 Remove the screws 19D-450 and the PSU panel 19D-380 from the lower part service cabinet 19D-040.

3 Remove the front frame 19D-400 from the PSU panel 19D-380.

4 Remove the sign housing 19D-410 and the printed circuit board PCB 19D-460 from the PSU panel 19D-380.

NOTE: For further instructions, see CMMV 33-26-06_DD704 (sign housing).

a Remove the hosing assembly 19D-420 from the sign housing 19D-410.
b Remove the lamps 19D-430 from the sign housing 19D-410.

SUB TASK 25-41-51-040-044-B01
D2549030501800 D2549030502400

2. Removal and Disassembly of the Service Cabinet (19D-1)

NOTE: See TABLE 3586 for the references for the replacement procedures of permanent installed parts.
More data for bonded parts are given in column SEE REPAIR TASK. Use the data for the selection of the related repair solution.

IPL FIG. ITEM	COMPONENT PART NAME	IPL FIG. ITEM	REPLACEMENT PART NAME	SEE REPAIR TASK
19D-001 19D-010 19D-300	Service Cabinet Service Cabinet Assembly Angle Assembly	19D-303 19D-306	Angle Bumper	Replacement of the Bonded Parts self adhesive
19D-001 19D-380	Service Cabinet PSU Panel	19D-390	Foil	Replacement of the Bonded Parts self adhesive
19D-001 19D-410	Service Cabinet Sign Housing	19D-440	Lens	Replacement of the Bonded Parts self adhesive

Table 3586
Reference list for the replacement of permanent installed parts

(a) Remove the service box 19D-370 from the service cabinet assembly 19D-010.

(b) Remove and disassemble the service cabinet assembly 19D-010 as follows:

1 Remove the screws 19D-350, the washers 19D-060, the nuts 19D-230 and the block 19D-340 from the upper part service cabinet assembly 19D-020.

2 Remove the screws 19D-310, the washers 19D-320, the nuts 19D-330 and the angle assemblies 19D-300 from the center part service cabinet 19D-030.

3 Remove the screws 19D-050, the washers 19D-060 and the upper part service cabinet assembly 19D-020.

4 Remove the hinge pin 19D-240 and the center part service cabinet 19D-030 from the hinge 19D-250.

5 Remove the screws 19D-050, the washers 19D-060 and the hinge 19D-250 from the lavatory structure.

6 Remove the screws 19D-270 and the lower part service cabinet 19D-040 from the angle brackets 19D-260.

7 Remove the screws 19D-050, the washers 19D-060 and the lower part service cabinet 19D-040.

8 Remove the screws 19D-070, the washers 19D-060 and the angle brackets 19D-260.

9 Remove the screws 19D-050, the washers 19D-060, the nuts 19D-230 and the angles 19D-100, 19D-160 from the center part service cabinet 19D-030.

10 Disassemble the angle 19D-100 as follows:
- a Remove the screws 19D-130, the washers 19D-140, the nuts 19D-150 and the part of the double-spring ball catch 19D-120 from the angle 19D-110.
- b Remove the screws 19D-090 and the part of the double-spring ball catch 19D-120 from the lavatory structure.

11 Disassemble the angle 19D-160 as follows:
- a Remove the screws 19D-190, the washers 19D-200, the nuts 19D-210 and the part of the double-spring ball catch 19D-180 from the angle 19D-170.
- b Remove the screws 19D-090 and the part of the double-spring ball catch 19D-180 from the lavatory structure.

(c) Remove and disassemble the PSU panel 19D-380 as follows:

1 Disconnect the PSU panel 19D-380 from the electrical supply.

2 Remove the screws 19D-450 and the PSU panel 19D-380 from the lower part service cabinet 19D-040.

3 Remove the front frame 19D-400 from the PSU panel 19D-380.

4 Remove the sign housing 19D-410 and the printed circuit board PCB 19D-460 from the PSU panel 19D-380.

NOTE: For further instructions, see CMMV 33-26-06_DD704 (sign housing).

a Remove the hosing assembly 19D-420 from the sign housing 19D-410.
b Remove the lamps 19D-430 from the sign housing 19D-410.

SUB TASK 25-41-51-040-044-C01
D2549020602000

3. Removal and Disassembly of the Service Cabinet (19D-1)

NOTE: **See TABLE 3587 for the references for the replacement procedures of permanent installed parts.**

More data for bonded parts are given in column SEE REPAIR TASK. Use the data for the selection of the related repair solution.

IPL FIG. ITEM	COMPONENT PART NAME	IPL FIG. ITEM	REPLACE-MENT PART NAME	SEE REPAIR TASK
19D-001 19D-010 19D-300	Service Cabinet Service Cabinet Assembly Angle Assembly	19D-303 19D-306	Angle Bumper	Replacement of the Bonded Parts self adhesive
19D-001 19D-380	Service Cabinet PSU Panel	19D-390	Foil	Replacement of the Bonded Parts self adhesive
19D-001 19D-410	Service Cabinet Sign Housing	19D-440	Lens	Replacement of the Bonded Parts self adhesive

Table 3587
Reference list for the replacement of permanent installed parts

(a) Remove the service box assembly 19D-370 from the service cabinet assembly 19D-010.

(b) Disassemble the service box assembly 19D-370 as follows:

1 Remove the drawer 19D-373 from the drawer guides 19D-374.

2 Remove the screws 19D-378 and the drawer guides 19D-374.

3 Remove the screws 19D-376, the handle 19D-377 and the handle holders 19D-375.

(c) Remove and disassemble the service cabinet assembly 19D-010 as follows:

1 Remove the screws 19D-350, the washers 19D-060, the nuts 19D-230 and the block 19D-340 from the upper part service cabinet assembly 19D-020.

2 Remove the screws 19D-310, the washers 19D-320, the nuts 19D-330 and the angle assemblies 19D-300 from the center part service cabinet 19D-030.

3 Remove the screws 19D-050, the washers 19D-060 and the upper part service cabinet assembly 19D-020.

4 Remove the hinge pin 19D-240 and the center part service cabinet 19D-030 from the hinge 19D-250.

5 Remove the screws 19D-050, the washers 19D-060 and the hinge 19D-250 from the lavatory structure.

6 Remove the screws 19D-270 and the lower part service cabinet 19D-040 from the angle brackets 19D-260.

7 Remove the screws 19D-050, the washers 19D-060 and the lower part service cabinet 19D-040.

8 Remove the screws 19D-070, the washers 19D-060 and the angle brackets 19D-260.

9 Remove the screws 19D-050, the washers 19D-060, the nuts 19D-230 and the angles 19D-100, 19D-160 from the center part service cabinet 19D-030.

10 Disassemble the angle 19D-100 as follows:
- a Remove the screws 19D-130, the washers 19D-140, the nuts 19D-150 and the part of the double-spring ball catch 19D-120 from the angle 19D-110.
- b Remove the screws 19D-090 and the part of the double-spring ball catch 19D-120 from the lavatory structure.

11 Disassemble the angle 19D-160 as follows:
- a Remove the screws 19D-190, the washers 19D-200, the nuts 19D-210 and the part of the double-spring ball catch 19D-180 from the angle 19D-170.
- b Remove the screws 19D-090 and the part of the double-spring ball catch 19D-180 from the lavatory structure.

(d) Remove and disassemble the PSU panel 19D-380 as follows:

1 Disconnect the PSU panel 19D-380 from the electrical supply.

2 Remove the screws 19D-450 and the PSU panel 19D-380 from the lower part service cabinet 19D-040.

3 Remove the front frame 19D-400 from the PSU panel 19D-380.

4 Remove the sign housing 19D-410 and the printed circuit board PCB 19D-460 from the PSU panel 19D-380.

NOTE: For further instructions, see CMMV 33-26-06_DD704 (sign housing).

a Remove the hosing assembly 19D-420 from the sign housing 19D-410.
b Remove the lamps 19D-430 from the sign housing 19D-410.

SUB TASK 25-41-51-040-044-D01
D2549020505200

4. Removal and Disassembly of the Service Cabinet (19D-1)

NOTE: See TABLE 3588 for the references for the replacement procedures of permanent installed parts.

More data for bonded parts are given in column SEE REPAIR TASK. Use the data for the selection of the related repair solution.

IPL FIG. ITEM	COMPONENT PART NAME	IPL FIG. ITEM	REPLACEMENT PART NAME	SEE REPAIR TASK
19D-001 19D-010 19D-300	Service Cabinet Service Cabinet Assembly Angle Assembly	19D-303 19D-306	Angle Bumper	Replacement of the Bonded Parts self adhesive
19D-001 19D-380	Service Cabinet PSU Panel	19D-390	Foil	Replacement of the Bonded Parts self adhesive
19D-001 19D-410	Service Cabinet Sign Housing	19D-440	Lens	Replacement of the Bonded Parts self adhesive

Table 3588
Reference list for the replacement of permanent installed parts

(a) Remove the service box assembly 19D-370 from the service cabinet assembly 19D-010.

(b) Disassemble the service box assembly 19D-370 as follows:

1 Remove the drawer 19D-373 from the drawer guides 19D-374.

2 Remove the screws 19D-378 and the drawer guides 19D-374.

3 Remove the screws 19D-376, the handle 19D-377 and the handle holders 19D-375.

(c) Remove and disassemble the service cabinet assembly 19D-010 as follows:

1 Remove the screws 19D-350, the washers 19D-060, the nuts 19D-230 and the block 19D-340 from the upper part service cabinet assembly 19D-020.

2 Remove the screws 19D-310, the washers 19D-320, the nuts 19D-330 and the angle assemblies 19D-300 from the center part service cabinet 19D-030.

3 Remove the screws 19D-050, the washers 19D-060 and the upper part service cabinet assembly 19D-020.

4 Remove the hinge pin 19D-240 and the center part service cabinet 19D-030 from the hinge 19D-250.

5 Remove the screws 19D-050, the washers 19D-060 and the hinge 19D-250 from the lavatory structure.

6 Remove the soap dispenser assemblies 19D-280 from the chutes 19D-290.

7 Remove the chutes 19D-290 from the lower part service cabinet 19D-040.

8 Remove the screws 19D-270 and the lower part service cabinet 19D-040 from the angle brackets 19D-260.

9 Remove the screws 19D-050, the washers 19D-060 and the lower part service cabinet 19D-040.

10 Remove the screws 19D-070, the washers 19D-060 and the angle brackets 19D-260.

11 Remove the screws 19D-050, 19D-220, the washers 19D-060 and the strip assembly 19D-080.

12 Remove the screws 19D-050, the washers 19D-060, the nuts 19D-230 and the angles 19D-100, 19D-160 from the center part service cabinet 19D-030.

13 Disassemble the angle 19D-100 as follows:
- a Remove the screws 19D-130, the washers 19D-140, the nuts 19D-150 and the part of the double-spring ball catch 19D-120 from the angle 19D-110.
- b Remove the part of the double-spring ball catch 19D-120 from the lavatory structure.

14 Disassemble the angle 19D-160 as follows:
- a Remove the screws 19D-190, the washers 19D-200, the nuts 19D-210 and the part of the double-spring ball catch 19D-180 from the angle 19D-170.
- b Remove the part of the double-spring ball catch 19D-180 from the lavatory structure.

(d) Remove and disassemble the PSU panel 19D-380 as follows:

1 Disconnect the PSU panel 19D-380 from the electrical supply.

2 Remove the screws 19D-450 and the PSU panel 19D-380 from the lower part service cabinet 19D-040.

3 Remove the front frame 19D-400 from the PSU panel 19D-380.

4 Remove the sign housing 19D-410 and the printed circuit board PCB 19D-460 from the PSU panel 19D-380.

NOTE: For further instructions, see CMMV 33-26-06_DD704 (sign housing).

- a Remove the hosing assembly 19D-420 from the sign housing 19D-410.
- b Remove the lamps 19D-430 from the sign housing 19D-410.

TASK 25-41-51-000-816-F01

D2547160900200 D2547160900400 D2549010400000 D2549010400200 D2549010400400
D2549010400600 D2549010400800 D2549010401000 D2549010401400 D2549010401600
D2549010402000 D2549010402200 D2549010402600 D2549010402800 D2549010403000
D2549010403200 D2549010403600 D2549010403800 D2549010404000 D2549010404200
D2549010404400 D2549010404600 D2549010404800 D2549010405000 D2549010405200
D2549010405400 D2549010405800 D2549010406000 D2549010406200 D2549010406800
D2549010407000 D2549010509400 D2549010509600 D2549010509800 D2549010510000
D2549010510400 D2549010510600 D2549010510800 D2549010511000 D2549010511400
D2549010511600 D2549010512000 D2549010512200 D2549010512400 D2549010513000
D2549010513200 D2549010513600 D2549010514000 D2549010514200 D2549010514400
D2549010514600 D2549010514800 D2549010600000 D2549010600400 D2549010600600
D2549010600800 D2549010601000 D2549010601200 D2549010601400 D2549010601600
D2549010602000 D2549010602200 D2549010602400 D2549010602600 D2549010602800
D2549010603000 D2549010603200 D2549010603400 D2549010603600 D2549010603800
D2549010604000 D2549010604200 D2549010604400 D2549010604600 D2549010604800
D2549010605000 D2549010605200 D2549010605600 D2549010605800 D2549010606200
D2549010606400 D2549010606600 D2549010606800 D2549010607000 D2549010607200
D2549010607400 D2549010607600 D2549010607800 D2549010608200 D2549010608400
D2549010608600 D2549010608800 D2549010609000 D2549010609200 D2549010609400
D2549010609600 D2549010609800 D2549010610000 D2549010610200 D2549010610400
D2549010610600 D2549010610800 D2549010611000 D2549010611200 D2549010611400
D2549010611600 D2549010611800 D2549010612000 D2549010612200 D2549010612400
D2549010612600 D2549010613000 D2549010613400 D2549010613600 D2549010613800
D2549010614200 D2549010614400 D2549010614600 D2549010614800 D2549020300400
D2549020300600 D2549020300800 D2549020301000 D2549020301800 D2549020302000
D2549020302800 D2549020400200 D2549020400400 D2549020400600 D2549020400800
D2549020401000 D2549020401200 D2549020401400 D2549020401600 D2549020402000
D2549020402200 D2549020402400 D2549020402600 D2549020403000 D2549020403200
D2549020403400 D2549020403600 D2549020403800 D2549020404200 D2549020404400
D2549020404600 D2549020404800 D2549020405000 D2549020405200 D2549020405400
D2549020405600 D2549020405800 D2549020406000 D2549020406200 D2549020406400
D2549020406600 D2549020406800 D2549020407000 D2549020407200 D2549020407600
D2549020407800 D2549020408000 D2549020408200 D2549020408600 D2549020408800
D2549020409000 D2549020409200 D2549020409400 D2549020409600 D2549020409800
D2549020410200 D2549020410400 D2549020410600 D2549020410800 D2549020411000
D2549020411400 D2549020411600 D2549020412000 D2549020412400 D2549020412600
D2549020412800 D2549020413000 D2549020413200 D2549020413400 D2549020413600
D2549020413800 D2549020414000 D2549020414200 D2549020414600 D2549020502200
D2549020505600 D2549020506200 D2549020506400 D2549020506600 D2549020507000
D2549020507200 D2549020507400 D2549020507600 D2549020508000 D2549020508200
D2549020508400 D2549020508600 D2549020508800 D2549020509200 D2549020509600
D2549020509800 D2549020510000 D2549020510400 D2549020510800 D2549020511000
D2549020511200 D2549020511600 D2549020511800 D2549020512000 D2549020512200
D2549020512600 D2549020512800 D2549020513000 D2549020513200 D2549020513400
D2549020513600 D2549020513800 D2549020514000 D2549020514200 D2549020514400
D2549020514600 D2549020514800 D2549020602200 D2549020604200 D2549020604400

D2549020604600 D2549020604800 D2549020605000 D2549020605200 D2549020605400
D2549020605600 D2549020606000 D2549020606800 D2549020607000 D2549020607400
D2549020607600 D2549020607800 D2549020608200 D2549020608400 D2549020608600
D2549020608800 D2549020609000 D2549020609200 D2549020609600 D2549020609800
D2549020610000 D2549020610400 D2549020610600 D2549020610800 D2549020611000
D2549020611200 D2549020611400 D2549020611600 D2549020611800 D2549020612000
D2549020612400 D2549020612800 D2549020613000 D2549020613200 D2549020613600
D2549020613800 D2549020614000 D2549020614400 D2549020614600 D2549020614800
D2549020700200 D2549020700400 D2549020700600 D2549020700800 D2549020701000
D2549020701200 D2549020701400 D2549020701600 D2549020701800 D2549020702200
D2549020702400 D2549020702600 D2549020702800 D2549020703200 D2549020703400
D2549020704000 D2549020704200 D2549020704400 D2549020704600 D2549020704800
D2549020705000 D2549020705200 D2549020705600 D2549020705800 D2549020706000
D2549020706200 D2549020706400 D2549020706600 D2549020707000 D2549020707200
D2549020707600 D2549020707800 D2549020708200 D2549020708600 D2549020708800
D2549020709000 D2549020709200 D2549020709600 D2549020709800 D2549020710200
D2549020710400 D2549020710600 D2549020710800 D2549020711000 D2549020711400
D2549020711600 D2549020712400 D2549020712800 D2549020713200 D2549020713400
D2549020713600 D2549020713800 D2549020714000 D2549020714600 D2549020800000
D2549020800200 D2549020800400 D2549020800600 D2549020800800 D2549020801000
D2549020801200 D2549020801400 D2549020801600 D2549020801800 D2549020802000
D2549020802200 D2549020802600 D2549020802800 D2549020803000 D2549020803200
D2549020803400 D2549020803600 D2549020803800 D2549020804000 D2549020804200
D2549020804400 D2549020804800 D2549020805000 D2549020805400 D2549020805600
D2549020805800 D2549020806000 D2549020806200 D2549020806600 D2549020806800
D2549020807000 D2549020807200 D2549020807600 D2549020807800 D2549020808200
D2549020808400 D2549020808600 D2549020808800 D2549020809000 D2549020809600
D2549020809800 D2549020810000 D2549020810200 D2549020810400 D2549020810600
D2549020810800 D2549020811200 D2549020811400 D2549020811600 D2549020811800
D2549020812000 D2549020812200 D2549020812400 D2549020812600 D2549020813000
D2549020813200 D2549020813400 D2549020813600 D2549020813800 D2549020814000
D2549020814200 D2549020814400 D2549020814600 D2549020814800 D2549030400000
D2549030400200 D2549030400400 D2549030400600 D2549030401000 D2549030401200
D2549030401400 D2549030401600 D2549030401800 D2549030402000 D2549030402400
D2549030402600 D2549030402800 D2549030403000 D2549030403400 D2549030403600
D2549030403800 D2549030404000 D2549030404200 D2549030404400 D2549030404600
D2549030404800 D2549030405000 D2549030405200 D2549030405600 D2549030405800
D2549030406000 D2549030406400 D2549030406600 D2549030406800 D2549030407000
D2549030407400 D2549030407600 D2549030407800 D2549030408000 D2549030408400
D2549030409000 D2549030409200 D2549030409800 D2549030410000 D2549030410400
D2549030411200 D2549030411400 D2549030411600 D2549030411800 D2549030412000
D2549030412400 D2549030412600 D2549030412800 D2549030413000 D2549030413200
D2549030413600 D2549030414400 D2549030414800 D2549030503800 D2549030504000
D2549030504200 D2549030504600 D2549030504800 D2549030505200 D2549030505400
D2549030505600 D2549030505800 D2549030506000 D2549030506200 D2549030506400
D2549030506600 D2549030506800 D2549030507000 D2549030507800 D2549030508000
D2549030508200 D2549030508400 D2549030508800 D2549030509200 D2549030509400

D2549030509600 D2549030509800 D2549030510000 D2549030510400 D2549030510600
D2549030510800 D2549030511000 D2549030511200 D2549030511400 D2549030511600
D2549030512000 D2549030512200 D2549030512400 D2549030512800 D2549030513000
D2549030513400 D2549030513600 D2549030513800 D2549030514000 D2549030514200
D2549030514400 D2549030514600 D2549030514800 D2549030600000 D2549030600200
D2549030600600 D2549030601000 D2549030601200 D2549030601400 D2549030601800
D2549030602000 D2549030602200 D2549030602400 D2549030602600 D2549030602800
D2549030603200 D2549030603400 D2549030603800 D2549030604200 D2549030604400
D2549030604600 D2549030604800 D2549030605000 D2549030605200 D2549030605400
D2549030605600 D2549030605800 D2549030606000 D2549030606200 D2549030606400
D2549030606600 D2549030606800 D2549030607000 D2549030607400 D2549030607600
D2549030608000 D2549030608200 D2549030608400 D2549030608600 D2549030608800
D2549030609000 D2549030609200 D2549030609800 D2549030610000 D2549030610400
D2549030610600 D2549030611000 D2549030611200 D2549030611400 D2549030611600
D2549030611800 D2549030612000 D2549030612200 D2549030612400 D2549030612800
D2549030613200 D2549030613400 D2549030613600 D2549030613800 D2549030614000
D2549030614800 D2549030700000 D2549030700200 D2549030700400 D2549030701000
D2549030701400 D2549030702200 D2549030702400 D2549030702600 D2549030702800
D2549030703000 D2549030703400 D2549030703600 D2549030703800 D2549030705200
D2549040500200 D2549040500400 D2549040500600 D2549040500800 D2549040501000
D2549040501200 D2549040501400 D2549040501600 D2549040501800 D2549040502000
R225401115-000 R225401134-002 R225401134-004 R225401134-006 R225401134-008
R225401134-010 R225401134-012 R225401134-014 R225401134-016 R225401134-018
R225401134-020 R225401134-022 R225401134-024 R225401134-026 R225401134-028
R225401134-030 R225401134-032 R225401134-034 R225401134-036 R225401134-038
R225401136-000 R225401136-004 R225401136-006 R225401136-008 R225401136-010
R225401136-012 R225401136-014 R225401136-016 R225401136-018 R225401136-020
R225401136-022 R225401136-024 R225401137-000 R225401137-002 R225401137-004
R225401137-006 R225401137-008 R225401137-010 R225401137-012 R225401137-014
R225401137-016 R225401142-000 R225401142-002 R225401145-002 R225401145-004
R225401145-006 R225401145-008 R225401145-010 R225401145-012 R225401145-014
R225401152-000 R225401152-002 R225401152-004 R225401152-006 R225401152-008
R225401152-010 R225401153-000 R225401159-000 R225401160-000 R225401160-002
R225401172-000 R225401172-002 R225401172-004 R225401172-006 R225401172-008
R225401172-010 R225401172-012 R225401172-014 R225401172-016 R225401172-018
R225401176-000 R225401183-000 R225401183-002 R225401183-004 R225401183-006
R225401183-008 R225401192-000 R225401192-002 R225401195-000 R225401196-000
R225401196-002 R225401196-004 R225401196-006 R225401196-008 R225401196-010
R225401196-012 R225401196-014 R225401196-016 R225401196-018 R225401196-020
R225401196-022 R225401196-024 R225401196-034 R225401196-036 R225401196-038
R225401196-040 R225401196-042 R225401196-044 R225401196-046 R225401196-048
R225401196-050 R225401196-052 R225401196-054 R225401196-056 R225401196-058
R225401196-060 R225401196-062 R225401196-064 R225401196-066 R225401196-068
R225401196-070 R225401199-000 R225401199-002 R225401199-004 R225401199-006
R225401199-008 R225401199-010 R225401199-012 R225401600-000 R225401600-002
R225401600-004 R225401602-000 R225401603-000 R225401605-000 R225401605-002
R225401609-000 R225401611-000 R225401611-006 R225401611-008 R225401611-010

R225401611-012 R225401611-014 R225401611-016 R225401611-018 R225401611-020
R225401613-000 R225401614-000 R225401618-000 R225401618-002 R225401619-000
R225401619-002 R225401622-000 R225401622-002 R225401624-000 R225401627-000
R225401627-002 R225401627-004 R225401629-000 R225401629-002 R225401639-000
R225401639-002 R225401643-000 R225401643-002 R225401643-004 R225401643-006
R225401643-008 R225401646-000 R225401646-002 R225401647-000 R225401648-000
R225401648-002 R225401648-004 R225401648-006 R225401648-008 R225401649-000
R225401656-000 R225401656-002 R225401658-000 R225401662-000 R225401662-002
R225401673-000 R225401673-002 R225401673-004 R225401673-006 R225401676-000
R225401683-000 R225401685-000 R225401685-002 R225401688-000 R225401689-004
R225401689-006 R225401691-000 R225401691-002 R225401693-000 R225401697-002
R225401803-000 R225401803-002 R225401811-000

168. Removal and Disassembly of the Service Cabinet

A. General

A complete disassembly of the component is not necessary and not recommended.

Do not disassemble the component more than it is necessary for:

- Cleaning
- Visual Inspection
- Replacement of defective parts.

B. Job Set-up Information
(1) Consumable Materials

REFERENCE	DESIGNATION
08-001	General Purpose Adhesive Honeycomb Filler

Table 3589
Consumable Materials

C. Procedure

WARNING: **BE CAREFUL WHEN YOU USE SOLVENTS/CLEANING AGENTS, SEALANTS AND OTHER MATERIALS. OBEY THE MATERIAL MANUFACTURER'S INSTRUCTIONS AND THE LOCAL REGULATIONS. MAKE SURE THAT THERE IS A GOOD FLOW OF AIR THROUGH THE WORK AREA. DO NOT BREATHE THE FUMES. DO NOT SMOKE. DO NOT USE THESE MATERIALS NEAR A FLAME, SPARKS OR SOURCES OF HEAT. USE PROTECTIVE CLOTHING, GOGGLES AND GLOVES. IF YOU GET ONE OF THESE MATERIALS ON YOUR SKIN OR IN YOUR EYES, FLUSH IT AWAY WITH A FLOW OF CLEAN WATER. IF YOU GET ONE OF THESE MATERIALS IN YOUR MOUTH, GET IMMEDIATE MEDICAL AID. IN GENERAL, THESE MATERIALS ARE POISONOUS, FLAMMABLE AND SKIN IRRITANTS.**

CAUTION: **DO ALL THE WORK ON A CLEAN, SOFT SURFACE TO PREVENT DAMAGE TO THE COMPONENTS.**

SUB TASK 25-41-51-000-133-A01

D2547160900200 D2547160900400 D2549010400000 D2549010400200
D2549010400400 D2549010400600 D2549010400800 D2549010401000
D2549010401400 D2549010401600 D2549010402000 D2549010402200
D2549010402600 D2549010402800 D2549010403200 D2549010403800
D2549010404000 D2549010404200 D2549010404400 D2549010404600
D2549010404800 D2549010405000 D2549010405200 D2549010405400
D2549010405800 D2549010406000 D2549010406200 D2549010407000
D2549010509600 D2549010509800 D2549010510400 D2549010510600
D2549010510800 D2549010511000 D2549010511600 D2549010512000
D2549010512400 D2549010513000 D2549010513200 D2549010513600
D2549010514000 D2549010514200 D2549010514400 D2549010514600
D2549010514800 D2549010600000 D2549010600400 D2549010600600
D2549010601000 D2549010601200 D2549010601400 D2549010601600
D2549010602400 D2549010602600 D2549010602800 D2549010603000
D2549010603200 D2549010603400 D2549010603600 D2549010604000
D2549010604400 D2549010604800 D2549010605000 D2549010605200
D2549010605600 D2549010605800 D2549010606200 D2549010606400
D2549010606800 D2549010607000 D2549010607200 D2549010607400
D2549010607600 D2549010607800 D2549010608200 D2549010608400
D2549010608600 D2549010608800 D2549010609000 D2549010609400
D2549010609800 D2549010610000 D2549010610200 D2549010610400
D2549010610600 D2549010610800 D2549010611000 D2549010611200
D2549010611400 D2549010611600 D2549010611800 D2549010612000
D2549010612200 D2549010612400 D2549010612600 D2549010613400
D2549010613600 D2549010613800 D2549010614200 D2549010614400
D2549010614600 D2549010614800 D2549020300400 D2549020300600
D2549020300800 D2549020301000 D2549020301800 D2549020302000
D2549020302800 D2549020400200 D2549020400400 D2549020400600
D2549020400800 D2549020401000 D2549020401400 D2549020401600
D2549020402000 D2549020402200 D2549020402400 D2549020402600

D2549020403200 D2549020403400 D2549020403600 D2549020403800
D2549020404200 D2549020404400 D2549020404600 D2549020404800
D2549020405000 D2549020405200 D2549020405400 D2549020405600
D2549020405800 D2549020406000 D2549020406200 D2549020406400
D2549020406600 D2549020406800 D2549020407000 D2549020407200
D2549020407600 D2549020407800 D2549020408000 D2549020408200
D2549020408600 D2549020408800 D2549020409000 D2549020409200
D2549020409400 D2549020409600 D2549020409800 D2549020410200
D2549020410400 D2549020410600 D2549020410800 D2549020411000
D2549020411400 D2549020411600 D2549020412000 D2549020412400
D2549020412600 D2549020412800 D2549020413000 D2549020413200
D2549020413600 D2549020413800 D2549020414000 D2549020414200
D2549020414600 D2549020502200 D2549020505600 D2549020506600
D2549020507400 D2549020507600 D2549020508000 D2549020508400
D2549020508600 D2549020508800 D2549020509200 D2549020509600
D2549020509800 D2549020510000 D2549020510400 D2549020510800
D2549020511000 D2549020511200 D2549020511600 D2549020511800
D2549020512000 D2549020512200 D2549020512600 D2549020513000
D2549020513200 D2549020513600 D2549020513800 D2549020514200
D2549020514400 D2549020514600 D2549020514800 D2549020602200
D2549020604200 D2549020604400 D2549020604600 D2549020604800
D2549020605200 D2549020605400 D2549020606000 D2549020606800
D2549020607000 D2549020607400 D2549020607600 D2549020607800
D2549020608600 D2549020608800 D2549020609000 D2549020609200
D2549020609600 D2549020609800 D2549020610000 D2549020610800
D2549020611000 D2549020611200 D2549020611400 D2549020611600
D2549020611800 D2549020612000 D2549020612400 D2549020612800
D2549020613000 D2549020613200 D2549020613800 D2549020614600
D2549020614800 D2549020700200 D2549020700400 D2549020700600
D2549020701200 D2549020701400 D2549020701600 D2549020701800
D2549020702200 D2549020702600 D2549020702800 D2549020703400
D2549020704200 D2549020704400 D2549020704600 D2549020704800
D2549020705000 D2549020705200 D2549020705600 D2549020705800
D2549020706000 D2549020706200 D2549020706400 D2549020706600
D2549020707000 D2549020707200 D2549020707600 D2549020707800
D2549020708200 D2549020708600 D2549020708800 D2549020709000
D2549020709200 D2549020709800 D2549020710200 D2549020710400
D2549020710600 D2549020710800 D2549020711400 D2549020711600
D2549020712400 D2549020712800 D2549020713200 D2549020713400
D2549020713600 D2549020713800 D2549020714000 D2549020714600
D2549020800000 D2549020800200 D2549020800400 D2549020800600
D2549020800800 D2549020801200 D2549020801400 D2549020801800
D2549020802000 D2549020802200 D2549020802600 D2549020802800
D2549020803000 D2549020803200 D2549020803400 D2549020803600
D2549020803800 D2549020804000 D2549020804200 D2549020804400
D2549020804800 D2549020805000 D2549020805400 D2549020805600
D2549020805800 D2549020806000 D2549020806200 D2549020806600

D2549020806800 D2549020807000 D2549020807200 D2549020807600
D2549020807800 D2549020808200 D2549020808400 D2549020808600
D2549020808800 D2549020809000 D2549020809600 D2549020809800
D2549020810000 D2549020810200 D2549020810400 D2549020810600
D2549020810800 D2549020811400 D2549020811600 D2549020811800
D2549020812000 D2549020812200 D2549020812400 D2549020812600
D2549020813000 D2549020813200 D2549020813400 D2549020813600
D2549020813800 D2549020814000 D2549020814200 D2549020814400
D2549020814600 D2549020814800 D2549030400000 D2549030400200
D2549030400400 D2549030400600 D2549030401200 D2549030401400
D2549030401600 D2549030401800 D2549030402600 D2549030402800
D2549030403000 D2549030403800 D2549030404000 D2549030404200
D2549030404800 D2549030405000 D2549030405600 D2549030405800
D2549030406000 D2549030406400 D2549030406600 D2549030406800
D2549030407000 D2549030407400 D2549030407600 D2549030407800
D2549030408000 D2549030408400 D2549030409200 D2549030409800
D2549030410000 D2549030410400 D2549030411200 D2549030411400
D2549030411600 D2549030412000 D2549030412400 D2549030412600
D2549030412800 D2549030413000 D2549030413200 D2549030413600
D2549030414400 D2549030414800 D2549030503800 D2549030504000
D2549030504200 D2549030504800 D2549030505600 D2549030506000
D2549030506200 D2549030507000 D2549030508000 D2549030508200
D2549030508400 D2549030508800 D2549030509800 D2549030510000
D2549030510400 D2549030510600 D2549030510800 D2549030511000
D2549030511200 D2549030511400 D2549030511600 D2549030512000
D2549030512200 D2549030512400 D2549030512800 D2549030513400
D2549030514200 D2549030514600 D2549030514800 D2549030600000
D2549030600200 D2549030600600 D2549030601000 D2549030601400
D2549030602000 D2549030602200 D2549030602400 D2549030602600
D2549030603200 D2549030604200 D2549030604400 D2549030604600
D2549030605000 D2549030605600 D2549030605800 D2549030606000
D2549030606200 D2549030606400 D2549030606600 D2549030606800
D2549030608000 D2549030608200 D2549030608400 D2549030608600
D2549030609000 D2549030609200 D2549030609800 D2549030610000
D2549030610400 D2549030611000 D2549030611600 D2549030611800
D2549030612000 D2549030612200 D2549030612400 D2549030613400
D2549030613600 D2549030613800 D2549030614000 D2549030614800
D2549030700000 D2549030700400 D2549030701000 D2549030701400
D2549030702200 D2549030702400 D2549030702800 D2549030703000
D2549030703400 D2549030703800 D2549030705200 D2549040500200
D2549040500400 D2549040500600 D2549040500800 D2549040501000
D2549040501200 D2549040501400 D2549040501600 D2549040501800
D2549040502000 R225401115-000 R225401136-000 R225401136-004 R225401136-006
R225401136-008 R225401136-010 R225401136-012 R225401136-014 R225401136-018
R225401136-020 R225401136-022 R225401136-024 R225401142-000 R225401142-002
R225401145-002 R225401145-004 R225401145-006 R225401145-008 R225401145-010
R225401145-012 R225401145-014 R225401152-000 R225401152-002 R225401152-004

R225401152-006 R225401152-008 R225401152-010 R225401153-000 R225401159-000 R225401160-000 R225401160-002 R225401172-000 R225401172-002 R225401172-004 R225401172-006 R225401172-008 R225401172-010 R225401172-012 R225401172-014 R225401172-016 R225401172-018 R225401176-000 R225401183-000 R225401183-002 R225401183-004 R225401183-006 R225401183-008 R225401192-000 R225401192-002 R225401195-000 R225401196-000 R225401196-002 R225401196-004 R225401196-006 R225401196-008 R225401196-010 R225401196-012 R225401196-014 R225401196-016 R225401196-018 R225401196-020 R225401196-022 R225401196-024 R225401196-034 R225401196-036 R225401196-038 R225401196-040 R225401196-042 R225401196-044 R225401196-046 R225401196-048 R225401196-050 R225401196-052 R225401196-054 R225401196-056 R225401196-058 R225401196-060 R225401196-062 R225401196-064 R225401196-066 R225401196-068 R225401196-070 R225401199-000 R225401199-002 R225401199-004 R225401199-006 R225401199-008 R225401199-010 R225401199-012 R225401602-000 R225401603-000 R225401605-000 R225401605-002 R225401609-000 R225401611-000 R225401611-006 R225401611-008 R225401611-010 R225401611-012 R225401611-014 R225401611-016 R225401611-018 R225401611-020 R225401613-000 R225401614-000 R225401618-000 R225401618-002 R225401619-000 R225401619-002 R225401622-000 R225401622-002 R225401624-000 R225401627-000 R225401627-002 R225401627-004 R225401629-000 R225401629-002 R225401639-000 R225401639-002 R225401643-000 R225401643-002 R225401643-004 R225401643-006 R225401643-008 R225401646-000 R225401646-002 R225401647-000 R225401648-000 R225401648-002 R225401648-004 R225401648-006 R225401648-008 R225401649-000 R225401656-000 R225401656-002 R225401658-000 R225401662-000 R225401662-002 R225401673-000 R225401673-002 R225401673-004 R225401673-006 R225401676-000 R225401683-000 R225401685-000 R225401685-002 R225401688-000 R225401689-004 R225401689-006 R225401691-000 R225401691-002 R225401693-000 R225401697-000 R225401697-002 R225401803-000 R225401803-002 R225401811-000

1. Removal and Disassembly of the Service Cabinet (19E-1)

NOTE: **See TABLE 3590 for the references for the replacement procedure of permanent installed parts.**

More data for bonded parts are given in column SEE REPAIR TASK. Use the data for the selection of the related repair solution.

IPL FIG. ITEM	COMPONENT PART NAME	IPL FIG. ITEM	REPLACEMENT PART NAME	SEE REPAIR TASK
19E-001 19E-010	Service Cabinet Service Cabinet Assembly	19E-110	Bushing	Replacement of the Bonded Parts Material No. 08-001 General Purpose Adhesive Honeycomb Filler
19E-001 19E-010 19E-160	Service Cabinet Service Cabinet Assembly Angle Assembly	19E-163 19E-166	Angle Bumper	Replacement of the Bonded Parts self adhesive
19E-001 19E-290 19E-300	Service Cabinet Passenger Service Unit PSU Front Frame Assembly	19E-310 19E-320	Foil Frame	Replacement of the Bonded Parts self adhesive

Table 3590
Reference list for the replacement of permanent installed parts

(a) Remove the service box assembly 19E-270 from the service cabinet assembly 19E-010.

(b) Disassemble the service box assembly 19E-270 as follows:

1 Remove the drawer 19E-273 from the drawer guides 19E-274.

2 Remove the screws 19E-278 and the drawer guides 19E-274.

3 Remove the screws 19E-276, the handle 19E-277 and the handle holders 19E-275.

(c) Remove and disassemble the service cabinet assembly 19E-010 as follows:

1 Remove the screws 19E-040, the washers 19E-060, the nuts 19E-050 and the block 19E-030 from the upper part service cabinet assembly 19E-020.

2 Remove the screws 19E-240, the washers 19E-250, the nuts 19E-260 and the angle assemblies 19E-160 from the center part service cabinet 19E-070.

3 Remove the screws 19E-200, 19E-205, the washers 19E-190 and the upper part service cabinet assembly 19E-020.

4 Remove the hinge pin 19E-100 and the center part service cabinet 19E-070 from the hinge 19E-090.

5 Remove the screws 19E-200, the washers 19E-190 and the hinge 19E-090 from the lavatory structure.

6 Remove the screws 19E-210 and the lower part service cabinet 19E-080 from the angle brackets 19E-170.

7 Remove the screws 19E-200, the washers 19E-190 and the lower part service cabinet 19E-080.

8 Remove the screws 19E-180, the washers 19E-190 and the angle bracket 19E-170.

9 Remove the screws 19E-185 the washers 19E-195, the nuts 19E-197 and the angle bracket 19E-170.

10 Remove the screws 19E-140 and the washers 19E-150 from the center part service cabinet 19E-070.

WARNING: **BE VERY CAREFUL WHEN YOU REMOVE OR INSTALL THE SPRING. BECAUSE THERE IS REMAINING TENSION IN THE SPRING, IT CAN CAUSE YOU INJURY.**

11 Remove the nuts 19E-220, the washers 19E-230, the bushings 19E-120 and the spring loaded latches 19E-130 from the upper part service cabinet assembly 19E-020 and from the lower part service cabinet 19E-080.

(d) Remove and disassemble the passenger service unit PSU 19E-290 as follows:

1 Remove the front frame assembly 19E-300 from the bracket 19E-390.

2 Remove the set screw 19E-340 and the passenger service unit PSU 19E-290 from the lower part service cabinet 19E-080.

3 Disconnect the passenger service unit PSU 19E-290 from the electrical supply.

4 Remove the set screw 19E-370 and the shaver outlet 19E-360 from the bracket 19E-390.

5 Remove the sign housing 19E-350 from the bracket 19E-390.

6 Remove the call switch wire-harness 19E-380 from the bracket 19E-390.

(e) Remove the protective film 19E-410 and the label 19E-400.

SUB TASK 25-41-51-000-133-B01

D2549010403000 D2549010403600 D2549010406800 D2549010509400 D2549010511400 D2549010512200 D2549010600800 D2549010603800 D2549010604200 D2549010606600 D2549010609200 D2549010609600 D2549010613000 D2549020403000 D2549020508200 D2549020512800 D2549020513400 D2549020605600 D2549020608200 D2549020610600 D2549020613600 D2549020702400 D2549020703200 D2549020801000 D2549030402000 D2549030403400 D2549030404600 D2549030405200 D2549030409000 D2549030411800 D2549030505200 D2549030506400 D2549030507800 D2549030509200 D2549030513000 D2549030513600 D2549030602800 D2549030604800 D2549030607000 D2549030610600 D2549030612800 D2549030703600 R225401134-002 R225401134-004 R225401134-006 R225401134-008 R225401134-010 R225401134-012 R225401134-014 R225401134-016 R225401134-018 R225401134-020 R225401134-022 R225401134-024 R225401134-026 R225401134-028 R225401134-030 R225401134-032 R225401134-034 R225401134-036 R225401134-038 R225401137-000 R225401137-002 R225401137-004 R225401137-006 R225401137-008 R225401137-010 R225401137-012 R225401137-014 R225401137-016 R225401600-000 R225401600-002 R225401600-004

2. Removal and Disassembly of the Service Cabinet (19E-1)

NOTE: **See TABLE 3591 for the references for the replacement procedure of permanent installed parts.**

More data for bonded parts are given in column SEE REPAIR TASK. Use the data for the selection of the related repair solution.

IPL FIG. ITEM	COMPONENT PART NAME	IPL FIG. ITEM	REPLACEMENT PART NAME	SEE REPAIR TASK
19E-001 19E-010	Service Cabinet Service Cabinet Assembly	19E-110	Bushing	Replacement of the Bonded Parts Material No. 08-001 General Purpose Adhesive Honeycomb Filler
19E-001 19E-010 19E-160	Service Cabinet Service Cabinet Assembly Angle Assembly	19E-163 19E-166	Angle Bumper	Replacement of the Bonded Parts self adhesive
19E-001 19E-290 19E-300	Service Cabinet Passenger Service Unit PSU Front Frame Assembly	19E-310 19E-320	Foil Frame	Replacement of the Bonded Parts self adhesive

Table 3591
Reference list for the replacement of permanent installed parts

(a) Remove the service box assembly 19E-270 from the service cabinet assembly 19E-010.

(b) Disassemble the service box assembly 19E-270 as follows:

1 Remove the drawer 19E-273 from the drawer guides 19E-274.

2 Remove the screws 19E-278 and the drawer guides 19E-274.

3 Remove the screws 19E-276, the handle 19E-277 and the handle holders 19E-275.

(c) Remove and disassemble the service cabinet assembly 19E-010 as follows:

1 Remove the screws 19E-040, the washers 19E-060, the nuts 19E-050 and the block 19E-030 from the upper part service cabinet assembly 19E-020.

2 Remove the screws 19E-240, the washers 19E-250, the nuts 19E-260 and the angle assemblies 19E-160 from the center part service cabinet 19E-070.

3 Remove the screws 19E-200, the washers 19E-190 and the upper part service cabinet assembly 19E-020.

4 Remove the hinge pin 19E-100 and the center part service cabinet 19E-070 from the hinge 19E-090.

5 Remove the screws 19E-200, the washers 19E-190 and the hinge 19E-090 from the lavatory structure.

6 Remove the soap dispenser assemblies 19E-262 from the chutes 19E-264.

7 Remove the chutes 19E-264 from the lower part service cabinet 19E-080.

8 Remove the screws 19E-210 and the lower part service cabinet 19E-080 from the angle brackets 19E-170.

9 Remove the screws 19E-200, the washers 19E-190 and the lower part service cabinet 19E-080.

10 Remove the screws 19E-180, the washers 19E-190 and the angle brackets 19E-170.

11 Remove the screws 19E-140 and the washers 19E-150 from the center part service cabinet 19E-070.

WARNING: BE VERY CAREFUL WHEN YOU REMOVE OR INSTALL THE SPRING. BECAUSE THERE IS REMAINING TENSION IN THE SPRING, IT CAN CAUSE YOU INJURY.

12 Remove the nuts 19E-220, the washers 19E-230, the bushings 19E-120 and the spring loaded latches 19E-130 from the upper part service cabinet assembly 19E-020 and from the lower part service cabinet 19E-080.

(d) Remove and disassemble the passenger service unit PSU 19E-290 as follows:

1 Remove the front frame assembly 19E-300 from the bracket 19E-390.

2 Remove the set screw 19E-340 and the passenger service unit PSU 19E-290 from the lower part service cabinet 19E-080.

3 Disconnect the passenger service unit PSU 19E-290 from the electrical supply.

4 Remove the set screw 19E-370 and the shaver outlet 19E-360 from the bracket 19E-390.

5 Remove the sign housing 19E-350 from the bracket 19E-390.

6 Remove the call switch wire-harness 19E-380 from the bracket 19E-390.

(e) Remove the protective film 19E-410 and the label 19E-400.

SUB TASK 25-41-51-000-133-C01

D2549020401200 D2549020413400 D2549020514000 D2549020605000 D2549020608400 D2549020610400 D2549020614000 D2549020614400 D2549020700800 D2549020704000 D2549020709600 D2549020711000 D2549020801600 D2549020811200 D2549030401000 D2549030402400 D2549030403600 D2549030404400 D2549030505400 D2549030505800 D2549030506600 D2549030506800 D2549030509400 D2549030509600 D2549030513800 D2549030514000 D2549030514400 D2549030601200 D2549030601800 D2549030603400 D2549030603800 D2549030605200 D2549030605400 D2549030607400 D2549030607600 D2549030608800 D2549030611200 D2549030611400 D2549030613200 D2549030700200 D2549030702600 R225401136-016

3. Removal and Disassembly of the Service Cabinet (19E-1)

NOTE: **See TABLE 3592 for the references for the replacement procedure of permanent installed parts.**

More data for bonded parts are given in column SEE REPAIR TASK. Use the data for the selection of the related repair solution.

IPL FIG. ITEM	COMPONENT PART NAME	IPL FIG. ITEM	REPLACEMENT PART NAME	SEE REPAIR TASK
19E-001 19E-010	Service Cabinet Service Cabinet Assembly	19E-110	Bushing	Replacement of the Bonded Parts Material No. 08-001 General Purpose Adhesive Honeycomb Filler
19E-001 19E-010 19E-160	Service Cabinet Service Cabinet Assembly Angle Assembly	19E-163 19E-166	Angle Bumper	Replacement of the Bonded Parts self adhesive
19E-001 19E-290 19E-300	Service Cabinet Passenger Service Unit PSU Front Frame Assembly	19E-310 19E-320	Foil Frame	Replacement of the Bonded Parts self adhesive

Table 3592
Reference list for the replacement of permanent installed parts

(a) Remove the service box assembly 19E-270 from the service cabinet assembly 19E-010.

(b) Disassemble the service box assembly 19E-270 as follows:

1 Remove the drawer 19E-273 from the drawer guides 19E-274.

2 Remove the screws 19E-278 and the drawer guides 19E-274.

3 Remove the screws 19E-276, the handle 19E-277 and the handle holders 19E-275.

(c) Remove and disassemble the service cabinet assembly 19E-010 as follows:

1 Remove the screws 19E-040, the washers 19E-060, the nuts 19E-050 and the block 19E-030 from the upper part service cabinet assembly 19E-020.

2 Remove the screws 19E-240, the washers 19E-250, the nuts 19E-260 and the angle assemblies 19E-160 from the center part service cabinet 19E-070.

3 Remove the screws 19E-200, the washers 19E-190 and the upper part service cabinet assembly 19E-020.

4 Remove the hinge pin 19E-100 and the center part service cabinet 19E-070 from the hinge 19E-090.

5 Remove the screws 19E-200, the washers 19E-190 and the hinge 19E-090 from the lavatory structure.

6 Remove the screws 19E-210 and the lower part service cabinet 19E-080 from the angle brackets 19E-170.

7 Remove the screws 19E-200, the washers 19E-190 and the lower part service cabinet 19E-080.

8 Remove the screws 19E-180, the washers 19E-190 and the angle brackets 19E-170.

9 Remove the screws 19E-140 and the washers 19E-150 from the center part service cabinet 19E-070.

WARNING: BE VERY CAREFUL WHEN YOU REMOVE OR INSTALL THE SPRING. BECAUSE THERE IS REMAINING TENSION IN THE SPRING, IT CAN CAUSE YOU INJURY.

10 Remove the nuts 19E-220, the washers 19E-230, the bushings 19E-120 and the spring loaded latches 19E-130 from the upper part service cabinet assembly 19E-020 and from the lower part service cabinet 19E-080.

(d) Remove and disassemble the passenger service unit PSU 19E-290 as follows:

1 Remove the front frame assembly 19E-300 from the bracket 19E-390.

2 Remove the set screw 19E-340 and the passenger service unit PSU 19E-290 from the lower part service cabinet 19E-080.

3 Disconnect the passenger service unit PSU 19E-290 from the electrical supply.

4 Remove the sign housing 19E-350 from the bracket 19E-390.

5 Remove the call switch wire-harness 19E-380 from the bracket 19E-390.

(e) Remove the label 19E-400.

SUB TASK 25-41-51-000-133-D01
D2549020506200 D2549020506400 D2549020507000 D2549020507200 D2549020701000

4. Removal and Disassembly of the Service Cabinet (19E-1)

NOTE: **See TABLE 3593 for the references for the replacement procedure of permanent installed parts.**

More data for bonded parts are given in column SEE REPAIR TASK. Use the data for the selection of the related repair solution.

IPL FIG. ITEM	COMPONENT PART NAME	IPL FIG. ITEM	REPLACEMENT PART NAME	SEE REPAIR TASK
19E-001 19E-010	Service Cabinet Service Cabinet Assembly	19E-110	Bushing	Replacement of the Bonded Parts Material No. 08-001 General Purpose Adhesive Honeycomb Filler
19E-001 19E-010 19E-160	Service Cabinet Service Cabinet Assembly Angle Assembly	19E-163 19E-166	Angle Bumper	Replacement of the Bonded Parts self adhesive
19E-001 19E-290 19E-300	Service Cabinet Passenger Service Unit PSU Front Frame Assembly	19E-310 19E-320	Foil Frame	Replacement of the Bonded Parts self adhesive

Table 3593
Reference list for the replacement of permanent installed parts

(a) Remove the service box assembly 19E-270 from the service cabinet assembly 19E-010.

(b) Disassemble the service box assembly 19E-270 as follows:

1 Remove the drawer 19E-273 from the drawer guides 19E-274.

2 Remove the screws 19E-278 and the drawer guides 19E-274.

3 Remove the screws 19E-276, the handle 19E-277 and the handle holders 19E-275.

(c) Remove and disassemble the service cabinet assembly 19E-010 as follows:

1 Remove the screws 19E-040, the washers 19E-060, the nuts 19E-050 and the block 19E-030 from the upper part service cabinet assembly 19E-020.

2 Remove the screws 19E-240, the washers 19E-250, the nuts 19E-260 and the angle assemblies 19E-160 from the center part service cabinet 19E-070.

3 Remove the screws 19E-200, the washers 19E-190 and the upper part service cabinet assembly 19E-020.

4 Remove the hinge pin 19E-100 and the center part service cabinet 19E-070 from the hinge 19E-090.

5 Remove the screws 19E-200, the washers 19E-190 and the hinge 19E-090 from the lavatory structure.

6 Remove the soap dispenser assemblies 19E-262 from the chutes 19E-264.

7 Remove the chutes 19E-264 from the lower part service cabinet 19E-080.

8 Remove the screws 19E-210 and the lower part service cabinet 19E-080 from the angle brackets 19E-170.

9 Remove the screws 19E-200, the washers 19E-190 and the lower part service cabinet 19E-080.

10 Remove the screws 19E-180, the washers 19E-190 and the angle brackets 19E-170.

11 Remove the screws 19E-140 and the washers 19E-150 from the center part service cabinet 19E-070.

WARNING: BE VERY CAREFUL WHEN YOU REMOVE OR INSTALL THE SPRING. BECAUSE THERE IS REMAINING TENSION IN THE SPRING, IT CAN CAUSE YOU INJURY.

12 Remove the nuts 19E-220, the washers 19E-230, the bushings 19E-120 and the spring loaded latches 19E-130 from the upper part service cabinet assembly 19E-020 and from the lower part service cabinet 19E-080.

(d) Remove and disassemble the passenger service unit PSU 19E-290 as follows:

1 Remove the front frame assembly 19E-300 from the bracket 19E-390.

2 Remove the set screw 19E-340 and the passenger service unit PSU 19E-290 from the lower part service cabinet 19E-080.

3 Disconnect the passenger service unit PSU 19E-290 from the electrical supply.

4 Remove the sign housing 19E-350 from the bracket 19E-390.

5 Remove the call switch wire-harness 19E-380 from the bracket 19E-390.

SUB TASK 25-41-51-000-133-E01
D2549010510000 D2549010602000 D2549010602200 D2549010604600 D2549030504600

5. Removal and Disassembly of the Service Cabinet (19E-1)

NOTE: **See TABLE 3594 for the references for the replacement procedure of permanent installed parts.**

More data for bonded parts are given in column SEE REPAIR TASK. Use the data for the selection of the related repair solution.

IPL FIG. ITEM	COMPONENT PART NAME	IPL FIG. ITEM	REPLACEMENT PART NAME	SEE REPAIR TASK
19E-001 19E-010	Service Cabinet Service Cabinet Assembly	19E-110	Bushing	Replacement of the Bonded Parts Material No. 08-001 General Purpose Adhesive Honeycomb Filler
19E-001 19E-010 19E-160	Service Cabinet Service Cabinet Assembly Angle Assembly	19E-163 19E-166	Angle Bumper	Replacement of the Bonded Parts self adhesive
19E-001 19E-290 19E-300	Service Cabinet Passenger Service Unit PSU Front Frame Assembly	19E-310 19E-320	Foil Frame	Replacement of the Bonded Parts self adhesive

Table 3594
Reference list for the replacement of permanent installed parts

(a) Remove the service boxes 19E-265 from the service cabinet assembly 19E-010.

(b) Remove and disassemble the service cabinet assembly 19E-010 as follows:

1 Remove the screws 19E-040, the washers 19E-060, the nuts 19E-050 and the block 19E-030 from the upper part service cabinet assembly 19E-020.

2 Remove the screws 19E-240, the washers 19E-250, the nuts 19E-260 and the angle assemblies 19E-160 from the center part service cabinet 19E-070.

3 Remove the screws 19E-200, the washers 19E-190 and the upper part service cabinet assembly 19E-020.

4 Remove the hinge pin 19E-100 and the center part service cabinet 19E-070 from the hinge 19E-090.

5 Remove the screws 19E-200, the washers 19E-190 and the hinge 19E-090 from the lavatory structure.

6 Remove the screws 19E-210 and the lower part service cabinet 19E-080 from the angle brackets 19E-170.

7 Remove the screws 19E-200, the washers 19E-190 and the lower part service cabinet 19E-080.

8 Remove the screws 19E-180, the washers 19E-190 and the angle brackets 19E-170.

9 Remove the screws 19E-140 and the washers 19E-150 from the center part service cabinet 19E-070.

WARNING: BE VERY CAREFUL WHEN YOU REMOVE OR INSTALL THE SPRING. BECAUSE THERE IS REMAINING TENSION IN THE SPRING, IT CAN CAUSE YOU INJURY.

10 Remove the nuts 19E-220, the washers 19E-230, the bushings 19E-120 and the spring loaded latches 19E-130 from the upper part service cabinet assembly 19E-020 and from the lower part service cabinet 19E-080.

(c) Remove and disassemble the passenger service unit PSU 19E-290 as follows:

1 Remove the front frame assembly 19E-300 from the bracket 19E-390.

2 Remove the set screw 19E-340 and the passenger service unit PSU 19E-290 from the lower part service cabinet 19E-080.

3 Disconnect the passenger service unit PSU 19E-290 from the electrical supply.

4 Remove the set screw 19E-370 and the shaver outlet 19E-360 from the bracket 19E-390.

5 Remove the sign housing 19E-350 from the bracket 19E-390.

6 Remove the call switch wire-harness 19E-380 from the bracket 19E-390.

TASK 25-41-51-000-816-G01

D2549010401800 D2549010405600 D2549010510200 D2549010511800 D2549010512600
D2549010513400 D2549010513800 D2549010600200 D2549010601800 D2549010606000
D2549010613200 D2549020300000 D2549020301600 D2549020411800 D2549020412200
D2549020414800 D2549020506800 D2549020507800 D2549020509000 D2549020510600
D2549020512400 D2549020605800 D2549020609400 D2549020610200 D2549020612200
D2549020612600 D2549020700000 D2549020702000 D2549020703600 D2549020703800
D2549020705400 D2549020706800 D2549020707400 D2549020708000 D2549020708400
D2549020709400 D2549020710000 D2549020711200 D2549020712200 D2549020713000
D2549020714400 D2549020802400 D2549020805200 D2549020806400 D2549020807400
D2549020809400 D2549030402200 D2549030405400 D2549030407200 D2549030408200
D2549030408600 D2549030409400 D2549030410600 D2549030410800 D2549030412200
D2549030413400 D2549030414200 D2549030414600 D2549030507200 D2549030507400
D2549030507600 D2549030508600 D2549030509000 D2549030510200 D2549030511800
D2549030513200 D2549030600400 D2549030600800 D2549030601600 D2549030603000
D2549030603600 D2549030607200 D2549030607800 D2549030612600 D2549030614200
D2549030614400 D2549030614600 D2549030701600 D2549030701800 D2549030703200
D2549030704000 D2549030704200 D2549030704400 D2549030705600 R225401107-004
R225401168-000 R225401168-002 R225401168-004 R225401168-006 R225401168-008
R225401168-010 R225401168-012 R225401168-014 R225401168-016 R225401168-018
R225401168-020 R225401168-022 R225401168-024 R225401168-026 R225401168-028
R225401175-000 R225401175-002 R225401625-000 R225401808-000 R225401814-000

169. Removal and Disassembly of the Service Cabinet

A. General

A complete disassembly of the component is not necessary and not recommended.

Do not disassemble the component more than it is necessary for:

- Cleaning
- Visual Inspection
- Replacement of defective parts.

B. Job Set-up Information
(1) Consumable Materials

REFERENCE	DESIGNATION
08-001	General Purpose Adhesive Honeycomb Filler

Table 3595
Consumable Materials

C. Procedure

WARNING: **BE CAREFUL WHEN YOU USE SOLVENTS/CLEANING AGENTS, SEALANTS AND OTHER MATERIALS. OBEY THE MATERIAL MANUFACTURER'S INSTRUCTIONS AND THE LOCAL REGULATIONS. MAKE SURE THAT THERE IS A GOOD FLOW OF AIR THROUGH THE WORK AREA. DO NOT BREATHE THE FUMES. DO NOT SMOKE. DO NOT USE THESE MATERIALS NEAR A FLAME, SPARKS OR SOURCES OF HEAT. USE PROTECTIVE CLOTHING, GOGGLES AND GLOVES. IF YOU GET ONE OF THESE MATERIALS ON YOUR SKIN OR IN YOUR EYES, FLUSH IT AWAY WITH A FLOW OF CLEAN WATER. IF YOU GET ONE OF THESE MATERIALS IN YOUR MOUTH, GET IMMEDIATE MEDICAL AID. IN GENERAL, THESE MATERIALS ARE POISONOUS, FLAMMABLE AND SKIN IRRITANTS.**

CAUTION: **DO ALL THE WORK ON A CLEAN, SOFT SURFACE TO PREVENT DAMAGE TO THE COMPONENTS.**

SUB TASK 25-41-51-000-134-A01
D2549010401800 D2549010510200 D2549010511800 D2549010512600
D2549010513400 D2549010601800 D2549010606000 D2549010613200
D2549020506800 D2549020609400 D2549020612600 D2549020703600
D2549020703800 D2549020706800 D2549020711200 D2549020712200
D2549030509000 R225401107-004

1. Removal and Disassembly of the Service Cabinet (19F-1)

NOTE: **See TABLE 3596 for the references for the replacement procedure of permanent installed parts.**

More data for bonded parts are given in column SEE REPAIR TASK. Use the data for the selection of the related repair solution.

IPL FIG. ITEM	COMPONENT PART NAME	IPL FIG. ITEM	REPLACEMENT PART NAME	SEE REPAIR TASK
19F-001 19F-010	Service Cabinet Service Cabinet Assembly	19F-110	Bushing	Replacement of the Bonded Parts Material No. 08-001 General Purpose Adhesive Honeycomb Filler
19F-001 19F-160	Service Cabinet Angle Assembly	19F-163 19F-166	Angle Bumper	Replacement of the Bonded Parts self adhesive
19F-001 19F-360 19F-370	Service Cabinet Passenger Service Unit PSU Front Frame Assembly	19F-380 19F-390	Foil Frame	Replacement of the Bonded Parts self adhesive

Table 3596
Reference list for the replacement of permanent installed parts

(a) Remove the service box assembly 19F-290 from the service cabinet assembly 19F-010.

(b) Disassemble the service box assembly 19F-290 as follows:

1 Remove the drawer 19F-300 from the drawer guides 19F-310.

2 Remove the screws 19F-350 and the drawer guides 19F-310.

3 Remove the screws 19F-330, the handle 19F-340 and the handle holders 19F-320.

(c) Remove and disassemble the service cabinet assembly 19F-010 as follows:

1 Remove the screws 19F-040, the washers 19F-060, the nuts 19F-050 and the block 19F-030 from the upper part service cabinet assembly 19F-020.

2 Remove the screws 19F-240, the washers 19F-250, the nuts 19F-260 and the angle assemblies 19F-160 from the center part service cabinet 19F-070.

3 Remove the screws 19F-200, the washers 19F-190 and the upper part service cabinet assembly 19F-020.

4 Remove the hinge pin 19F-100 and the center part service cabinet 19F-070 from the hinge 19F-090.

5 Remove the screws 19F-200, the washers 19F-190 and the hinge 19F-090 from the lavatory structure.

6 Remove the soap dispenser assemblies 19F-270 from the chutes 19F-280.

7 Remove the chutes 19F-280 from the lower part service cabinet 19F-080.

8 Remove the screws 19F-210 and the lower part service cabinet 19F-080 from the angle brackets 19F-170.

9 Remove the screws 19F-200, the washers 19F-190 and the lower part service cabinet 19F-080.

10 Remove the screws 19F-180, the washers 19F-190 and the angle brackets 19F-170.

11 Remove the screws 19F-140 and the washers 19F-150 from the center part service cabinet 19F-070.

WARNING: BE VERY CAREFUL WHEN YOU REMOVE OR INSTALL THE SPRING. BECAUSE THERE IS REMAINING TENSION IN THE SPRING, IT CAN CAUSE YOU INJURY.

12 Remove the nuts 19F-220, the washers 19F-230, the bushings 19F-120 and the spring loaded latches 19F-130 from the upper part service cabinet assembly 19F-020 and from the lower part service cabinet 19F-080.

(d) Remove and disassemble the passenger service unit PSU 19F-360 as follows:

1 Remove the front frame assembly 19F-370 from the bracket 19F-460.

2 Remove the set screw 19F-410 and the passenger service unit PSU 19F-360 from the lower part service cabinet 19F-080.

3 Disconnect the passenger service unit PSU 19F-360 from the electrical supply.

4 Remove the set screw 19F-440 and the shaver outlet 19F-430 from the bracket 19F-460.

5 Remove the sign housing 19F-420 from the bracket 19F-460.

6 Remove the call switch wire-harness 19F-450 from the bracket 19F-460.

(e) Remove the label 19F-470.

SUB TASK 25-41-51-000-134-B01

D2549010405600 D2549010513800 D2549010600200 D2549020300000 D2549020301600 D2549020411800 D2549020412200 D2549020414800 D2549020509000 D2549020510600 D2549020512400 D2549020610200 D2549020612200 D2549020700000 D2549020702000 D2549020705400 D2549020707400 D2549020708000 D2549020709400 D2549020710000 D2549020713000 D2549020714400 D2549020802400 D2549020805200 D2549020806400 D2549020807400 D2549020809400 D2549030402200 D2549030405400 D2549030407200 D2549030408200 D2549030408600 D2549030409400 D2549030410600 D2549030410800 D2549030412200 D2549030413400 D2549030414200 D2549030414600 D2549030507200 D2549030507400 D2549030507600 D2549030508600 D2549030510200 D2549030511800 D2549030513200 D2549030600400 D2549030600800 D2549030601600 D2549030603000 D2549030603600 D2549030607200 D2549030607800 D2549030612600 D2549030614200 D2549030614400 D2549030614600 D2549030701600 D2549030701800 D2549030703200 D2549030704000 D2549030704200 D2549030704400 D2549030705600 R225401168-000 R225401168-002 R225401168-004 R225401168-006 R225401168-008 R225401168-010 R225401168-012 R225401168-014 R225401168-016 R225401168-018 R225401168-020 R225401168-022 R225401168-024 R225401168-026 R225401168-028 R225401175-000 R225401175-002 R225401625-000 R225401808-000 R225401814-000

2. Removal and Disassembly of the Service Cabinet (19F-1)

NOTE: **See TABLE 3597 for the references for the replacement procedure of permanent installed parts.**

More data for bonded parts are given in column SEE REPAIR TASK. Use the data for the selection of the related repair solution.

IPL FIG. ITEM	COMPONENT PART NAME	IPL FIG. ITEM	REPLACEMENT PART NAME	SEE REPAIR TASK
19F-001 19F-010	Service Cabinet Service Cabinet Assembly	19F-110	Bushing	Replacement of the Bonded Parts Material No. 08-001 General Purpose Adhesive Honeycomb Filler
19F-001 19F-160	Service Cabinet Angle Assembly	19F-163 19F-166	Angle Bumper	Replacement of the Bonded Parts self adhesive
19F-001 19F-360 19F-370	Service Cabinet Passenger Service Unit PSU Front Frame Assembly	19F-380 19F-390	Foil Frame	Replacement of the Bonded Parts self adhesive

Table 3597
Reference list for the replacement of permanent installed parts

(a) Remove the service box assembly 19F-290 from the service cabinet assembly 19F-010.

(b) Disassemble the service box assembly 19F-290 as follows:

1 Remove the drawer 19F-300 from the drawer guides 19F-310.

2 Remove the screws 19F-350 and the drawer guides 19F-310.

3 Remove the screws 19F-330, the handle 19F-340 and the handle holders 19F-320.

(c) Remove and disassemble the service cabinet assembly 19F-010 as follows:

1 Remove the screws 19F-040, the washers 19F-060, the nuts 19F-050 and the block 19F-030 from the upper part service cabinet assembly 19F-020.

2 Remove the screws 19F-240, the washers 19F-250, the nuts 19F-260 and the angle assemblies 19F-160 from the center part service cabinet 19F-070.

3 Remove the screws 19F-200, the washers 19F-190 and the upper part service cabinet assembly 19F-020.

4 Remove the hinge pin 19F-100 and the center part service cabinet 19F-070 from the hinge 19F-090.

5 Remove the screws 19F-200, the washers 19F-190 and the hinge 19F-090 from the lavatory structure.

6 Remove the screws 19F-210 and the lower part service cabinet 19F-080 from the angle brackets 19F-170.

7 Remove the screws 19F-200, the washers 19F-190 and the lower part service cabinet 19F-080.

8 Remove the screws 19F-180, the washers 19F-190 and the angle brackets 19F-170.

9 Remove the screws 19F-140 and the washers 19F-150 from the center part service cabinet 19F-070.

WARNING: BE VERY CAREFUL WHEN YOU REMOVE OR INSTALL THE SPRING. BECAUSE THERE IS REMAINING TENSION IN THE SPRING, IT CAN CAUSE YOU INJURY.

10 Remove the nuts 19F-220, the washers 19F-230, the bushings 19F-120 and the spring loaded latches 19F-130 from the upper part service cabinet assembly 19F-020 and from the lower part service cabinet 19F-080.

(d) Remove and disassemble the passenger service unit PSU 19F-360 as follows:

1 Remove the front frame assembly 19F-370 from the bracket 19F-460.

2 Remove the set screw 19F-410 and the passenger service unit PSU 19F-360 from the lower part service cabinet 19F-080.

3 Disconnect the passenger service unit PSU 19F-360 from the electrical supply.

4 Remove the set screw 19F-440 and the shaver outlet 19F-430 from the bracket 19F-460.

5 Remove the sign housing 19F-420 from the bracket 19F-460.

6 Remove the call switch wire-harness 19F-450 from the bracket 19F-460.

(e) Remove the protective film 19F-480 and the label 19F-470.

SUB TASK 25-41-51-000-134-C01
D2549020507800 D2549020605800 D2549020708400

3. Removal and Disassembly of the Service Cabinet (19F-1)

NOTE: **See TABLE 3598 for the references for the replacement procedure of permanent installed parts.**

More data for bonded parts are given in column SEE REPAIR TASK. Use the data for the selection of the related repair solution.

IPL FIG. ITEM	COMPONENT PART NAME	IPL FIG. ITEM	REPLACEMENT PART NAME	SEE REPAIR TASK
19F-001 19F-010	Service Cabinet Service Cabinet Assembly	19F-110	Bushing	Replacement of the Bonded Parts Material No. 08-001 General Purpose Adhesive Honeycomb Filler
19F-001 19F-160	Service Cabinet Angle Assembly	19F-163 19F-166	Angle Bumper	Replacement of the Bonded Parts self adhesive
19F-001 19F-360 19F-370	Service Cabinet Passenger Service Unit PSU Front Frame Assembly	19F-380 19F-390	Foil Frame	Replacement of the Bonded Parts self adhesive

Table 3598
Reference list for the replacement of permanent installed parts

(a) Remove and disassemble the service cabinet assembly 19F-010 as follows:

1 Remove the screws 19F-040, the washers 19F-060, the nuts 19F-050 and the block 19F-030 from the upper part service cabinet assembly 19F-020.

2 Remove the screws 19F-240, the washers 19F-250, the nuts 19F-260 and the angle assemblies 19F-160 from the center part service cabinet 19F-070.

3 Remove the screws 19F-200, the washers 19F-190 and the upper part service cabinet assembly 19F-020.

4 Remove the hinge pin 19F-100 and the center part service cabinet 19F-070 from the hinge 19F-090.

5 Remove the screws 19F-200, the washers 19F-190 and the hinge 19F-090 from the lavatory structure.

6 Remove the screws 19F-210 and the lower part service cabinet 19F-080 from the angle brackets 19F-170.

7 Remove the screws 19F-200, the washers 19F-190 and the lower part service cabinet 19F-080.

8 Remove the screws 19F-180, the washers 19F-190 and the angle brackets 19F-170.

9 Remove the screws 19F-140 and the washers 19F-150 from the center part service cabinet 19F-070.

WARNING: BE VERY CAREFUL WHEN YOU REMOVE OR INSTALL THE SPRING. BECAUSE THERE IS REMAINING TENSION IN THE SPRING, IT CAN CAUSE YOU INJURY.

10 Remove the nuts 19F-220, the washers 19F-230, the bushings 19F-120 and the spring loaded latches 19F-130 from the upper part service cabinet assembly 19F-020 and from the lower part service cabinet 19F-080.

(b) Remove and disassemble the passenger service unit PSU 19F-360 as follows:

1 Remove the front frame assembly 19F-370 from the bracket 19F-460.

2 Remove the set screw 19F-410 and the passenger service unit PSU 19F-360 from the lower part service cabinet 19F-080.

3 Disconnect the passenger service unit PSU 19F-360 from the electrical supply.

4 Remove the set screw 19F-440 and the shaver outlet 19F-430 from the bracket 19F-460.

5 Remove the sign housing 19F-420 from the bracket 19F-460.

6 Remove the call switch wire-harness 19F-450 from the bracket 19F-460.

TASK 25-41-51-000-816-H01
D2549020712000 D2549020712600

170. Removal and Disassembly of the Service Cabinet

A. General

A complete disassembly of the component is not necessary and not recommended.

Do not disassemble the component more than it is necessary for:

- Cleaning
- Visual Inspection
- Replacement of defective parts.

B. Procedure

WARNING: BE CAREFUL WHEN YOU USE SOLVENTS/CLEANING AGENTS, SEALANTS AND OTHER MATERIALS. OBEY THE MATERIAL MANUFACTURER'S INSTRUCTIONS AND THE LOCAL REGULATIONS. MAKE SURE THAT THERE IS A GOOD FLOW OF AIR THROUGH THE WORK AREA. DO NOT BREATHE THE FUMES. DO NOT SMOKE. DO NOT USE THESE MATERIALS NEAR A FLAME, SPARKS OR SOURCES OF HEAT. USE PROTECTIVE CLOTHING, GOGGLES AND GLOVES. IF YOU GET ONE OF THESE MATERIALS ON YOUR SKIN OR IN YOUR EYES, FLUSH IT AWAY WITH A FLOW OF CLEAN WATER. IF YOU GET ONE OF THESE MATERIALS IN YOUR MOUTH, GET IMMEDIATE MEDICAL AID. IN GENERAL, THESE MATERIALS ARE POISONOUS, FLAMMABLE AND SKIN IRRITANTS.

CAUTION: DO ALL THE WORK ON A CLEAN, SOFT SURFACE TO PREVENT DAMAGE TO THE COMPONENTS.

SUB TASK 25-41-51-000-135-A01

1. Removal and Disassembly of the Service Cabinet (19G-1)

(a) Remove and disassemble the upper part service cabinet assembly 19G-010 as follows:

1 Remove the screws 19G-040, the washers 19G-030, the nuts 19G-050 and the block 19G-020 from the upper part service cabinet assembly 19G-010.

2 Remove the screws 19G-060, the washers 19G-070 and the upper part service cabinet assembly 19G-010 from the lavatory structure.

TASK 25-41-51-000-816-J01
D2549020400000 D2549020404000 D2549020411200 D2549020812800 D2549030409600 D2549030410200 D2549030414000 D2549030700600 D2549030700800 D2549030702000 D2549030704600 D2549030704800 R225401671-000 R225401671-002 R225401675-000

171. Removal and Disassembly of the Service Cabinet

A. General

A complete disassembly of the component is not necessary and not recommended.

Do not disassemble the component more than it is necessary for:

- Cleaning
- Visual Inspection
- Replacement of defective parts.

B. Job Set-up Information
(1) Consumable Materials

REFERENCE	DESIGNATION
08-001	General Purpose Adhesive Honeycomb Filler

Table 3599
Consumable Materials

C. Procedure

WARNING: **BE CAREFUL WHEN YOU USE SOLVENTS/CLEANING AGENTS, SEALANTS AND OTHER MATERIALS. OBEY THE MATERIAL MANUFACTURER'S INSTRUCTIONS AND THE LOCAL REGULATIONS. MAKE SURE THAT THERE IS A GOOD FLOW OF AIR THROUGH THE WORK AREA. DO NOT BREATHE THE FUMES. DO NOT SMOKE. DO NOT USE THESE MATERIALS NEAR A FLAME, SPARKS OR SOURCES OF HEAT. USE PROTECTIVE CLOTHING, GOGGLES AND GLOVES. IF YOU GET ONE OF THESE MATERIALS ON YOUR SKIN OR IN YOUR EYES, FLUSH IT AWAY WITH A FLOW OF CLEAN WATER. IF YOU GET ONE OF THESE MATERIALS IN YOUR MOUTH, GET IMMEDIATE MEDICAL AID. IN GENERAL, THESE MATERIALS ARE POISONOUS, FLAMMABLE AND SKIN IRRITANTS.**

CAUTION: **DO ALL THE WORK ON A CLEAN, SOFT SURFACE TO PREVENT DAMAGE TO THE COMPONENTS.**

SUB TASK 25-41-51-000-136-A01
D2549020812800

1. Removal and Disassembly of the Service Cabinet (19H-1)

NOTE: **See TABLE 3600 for the references for the replacement procedure of permanent installed parts.**

More data for bonded parts are given in column SEE REPAIR TASK. Use the data for the selection of the related repair solution.

IPL FIG. ITEM	COMPONENT PART NAME	IPL FIG. ITEM	REPLACEMENT PART NAME	SEE REPAIR TASK
19H-001 19H-010	Service Cabinet Service Cabinet Assembly	19H-110	Bushing	Replacement of the Bonded Parts Material No. 08-001 General Purpose Adhesive Honeycomb Filler
19H-001 19H-160	Service Cabinet Angle Assembly	19H-170 19H-180	Angle Bumper	Replacement of the Bonded Parts self adhesive
19H-001 19H-300 19H-310	Service Cabinet Passenger Service Unit PSU Front Frame Assembly	19H-320 19H-330	Foil Frame	Replacement of the Bonded Parts self adhesive

Table 3600
Reference list for the replacement of permanent installed parts

(a) Remove and disassemble the service cabinet assembly 19H-010 as follows:

1 Remove the screws 19H-040, the washers 19H-060, the nuts 19H-050 and the block 19H-030 from the upper part service cabinet assembly 19H-020.

2 Remove the screws 19H-260, the washers 19H-270, the nuts 19H-280 and the angle assemblies 19H-160 from the center part service cabinet 19H-070.

3 Remove the screws 19H-220, the washers 19H-210 and the upper part service cabinet assembly 19H-020.

4 Remove the hinge pin 19H-100 and the center part service cabinet 19H-070 from the hinge 19H-090.

5 Remove the screws 19H-220, the washers 19H-210 and the hinge 19H-090 from the lavatory structure.

6 Remove the screws 19H-230 and the lower part service cabinet 19H-080 from the angle brackets 19H-190.

7 Remove the screws 19H-220, the washers 19H-210 and the lower part service cabinet 19H-080.

8 Remove the screws 19H-200, the washers 19H-210 and the angle brackets 19H-190.

9 Remove the screws 19H-140 and the washers 19H-150 from the center part service cabinet 19H-070.

WARNING: BE VERY CAREFUL WHEN YOU REMOVE OR INSTALL THE SPRING. BECAUSE THERE IS REMAINING TENSION IN THE SPRING, IT CAN CAUSE YOU INJURY.

10 Remove the nuts 19H-240, the washers 19H-250, the bushings 19H-120 and the spring loaded latches 19H-130 from the upper part service cabinet assembly 19H-020 and from the lower part service cabinet 19H-080.

(b) Remove and disassemble the passenger service unit PSU 19H-300 as follows:

1 Remove the front frame assembly 19H-310 from the bracket 19H-385.

2 Remove the set screw 19H-340 and the passenger service unit PSU 19H-300 from the lower part service cabinet 19H-080.

3 Disconnect the passenger service unit PSU 19H-300 from the electrical supply.

4 Remove the set screw 19H-370 and the shaver outlet 19H-360 from the bracket 19H-385.

5 Remove the sign housing 19H-350 from the bracket 19H-385.

6 Remove the call switch wire-harness 19H-380 from the bracket 19H-385.

SUB TASK 25-41-51-000-136-B01
D2549020411200 D2549030409600 D2549030410200 D2549030414000 D2549030702000 D2549030704800 R225401671-000 R225401671-002 R225401675-000

2. Removal and Disassembly of the Service Cabinet (19H-1)

NOTE: **See TABLE 3601 for the references for the replacement procedure of permanent installed parts.**

More data for bonded parts are given in column SEE REPAIR TASK. Use the data for the selection of the related repair solution.

IPL FIG. ITEM	COMPONENT PART NAME	IPL FIG. ITEM	REPLACEMENT PART NAME	SEE REPAIR TASK
19H-001 19H-010	Service Cabinet Service Cabinet Assembly	19H-110	Bushing	Replacement of the Bonded Parts Material No. 08-001 General Purpose Adhesive Honeycomb Filler
19H-001 19H-160	Service Cabinet Angle Assembly	19H-170 19H-180	Angle Bumper	Replacement of the Bonded Parts self adhesive
19H-001 19H-300 19H-310	Service Cabinet Passenger Service Unit PSU Front Frame Assembly	19H-320 19H-330	Foil Frame	Replacement of the Bonded Parts self adhesive

Table 3601
Reference list for the replacement of permanent installed parts

(a) Remove the service box assembly 19H-390 from the service cabinet assembly 19H-010.

(b) Disassemble the service box assembly 19H-390 as follows:

1 Remove the drawer 19H-400 from the drawer guides 19H-410.

2 Remove the screws 19H-450 and the drawer guides 19H-410.

3 Remove the screws 19H-430, the handle 19H-440 and the handle holders 19H-420.

(c) Remove and disassemble the service cabinet assembly 19H-010 as follows:

1 Remove the screws 19H-040, the washers 19H-060, the nuts 19H-050 and the block 19H-030 from the upper part service cabinet assembly 19H-020.

2 Remove the screws 19H-260, the washers 19H-270, the nuts 19H-280 and the angle assemblies 19H-160 from the center part service cabinet 19H-070.

3 Remove the screws 19H-220, the washers 19H-210 and the upper part service cabinet assembly 19H-020.

4 Remove the hinge pin 19H-100 and the center part service cabinet 19H-070 from the hinge 19H-090.

5 Remove the screws 19H-220, the washers 19H-210 and the hinge 19H-090 from the lavatory structure.

6 Remove the screws 19H-230 and the lower part service cabinet 19H-080 from the angle brackets 19H-190.

7 Remove the screws 19H-220, the washers 19H-210 and the lower part service cabinet 19H-080.

8 Remove the screws 19H-200, the washers 19H-210 and the angle brackets 19H-190.

9 Remove the screws 19H-140 and the washers 19H-150 from the center part service cabinet 19H-070.

WARNING: **BE VERY CAREFUL WHEN YOU REMOVE OR INSTALL THE SPRING. BECAUSE THERE IS REMAINING TENSION IN THE SPRING, IT CAN CAUSE YOU INJURY.**

10 Remove the nuts 19H-240, the washers 19H-250, the bushings 19H-120 and the spring loaded latches 19H-130 from the upper part service cabinet assembly 19H-020 and from the lower part service cabinet 19H-080.

(d) Remove and disassemble the passenger service unit PSU 19H-300 as follows:

1 Remove the front frame assembly 19H-310 from the bracket 19H-385.

2 Remove the set screw 19H-340 and the passenger service unit PSU 19H-300 from the lower part service cabinet 19H-080.

3 Disconnect the passenger service unit PSU 19H-300 from the electrical supply.

4 Remove the set screw 19H-370 and the shaver outlet 19H-360 from the bracket 19H-385.

5 Remove the sign housing 19H-350 from the bracket 19H-385.

6 Remove the call switch wire-harness 19H-380 from the bracket 19H-385.

(e) Remove the protective film 19H-470 and the label 19H-460.

SUB TASK 25-41-51-000-136-C01
D2549020400000 D2549020404000 D2549030700600 D2549030700800 D2549030704600

3. Removal and Disassembly of the Service Cabinet (19H-1)

NOTE: **See TABLE 3602 for the references for the replacement procedure of permanent installed parts.**

More data for bonded parts are given in column SEE REPAIR TASK. Use the data for the selection of the related repair solution.

IPL FIG. ITEM	COMPONENT PART NAME	IPL FIG. ITEM	REPLACEMENT PART NAME	SEE REPAIR TASK
19H-001 19H-010	Service Cabinet Service Cabinet Assembly	19H-110	Bushing	Replacement of the Bonded Parts Material No. 08-001 General Purpose Adhesive Honeycomb Filler
19H-001 19H-160	Service Cabinet Angle Assembly	19H-170 19H-180	Angle Bumper	Replacement of the Bonded Parts self adhesive
19H-001 19H-300 19H-310	Service Cabinet Passenger Service Unit PSU Front Frame Assembly	19H-320 19H-330	Foil Frame	Replacement of the Bonded Parts self adhesive

Table 3602
Reference list for the replacement of permanent installed parts

(a) Remove the service box assembly 19H-390 from the service cabinet assembly 19H-010.

(b) Disassemble the service box assembly 19H-390 as follows:

1 Remove the drawer 19H-400 from the drawer guides 19H-410.

2 Remove the screws 19H-450 and the drawer guides 19H-410.

3 Remove the screws 19H-430, the handle 19H-440 and the handle holders 19H-420.

(c) Remove and disassemble the service cabinet assembly 19H-010 as follows:

1 Remove the screws 19H-040, the washers 19H-060, the nuts 19H-050 and the block 19H-030 from the upper part service cabinet assembly 19H-020.

2 Remove the screws 19H-260, the washers 19H-270, the nuts 19H-280 and the angle assemblies 19H-160 from the center part service cabinet 19H-070.

3 Remove the screws 19H-220, the washers 19H-210 and the upper part service cabinet assembly 19H-020.

4 Remove the hinge pin 19H-100 and the center part service cabinet 19H-070 from the hinge 19H-090.

5 Remove the screws 19H-220, the washers 19H-210 and the hinge 19H-090 from the lavatory structure.

6 Remove the soap dispenser assemblies 19H-285 from the chutes 19H-295.

7 Remove the chutes 19H-295 from the lower part service cabinet 19H-080.

8 Remove the screws 19H-230 and the lower part service cabinet 19H-080 from the angle brackets 19H-190.

9 Remove the screws 19H-220, the washers 19H-210 and the lower part service cabinet 19H-080.

10 Remove the screws 19H-200, the washers 19H-210 and the angle brackets 19H-190.

11 Remove the screws 19H-140 and the washers 19H-150 from the center part service cabinet 19H-070.

WARNING: BE VERY CAREFUL WHEN YOU REMOVE OR INSTALL THE SPRING. BECAUSE THERE IS REMAINING TENSION IN THE SPRING, IT CAN CAUSE YOU INJURY.

12 Remove the nuts 19H-240, the washers 19H-250, the bushings 19H-120 and the spring loaded latches 19H-130 from the upper part service cabinet assembly 19H-020 and from the lower part service cabinet 19H-080.

(d) Remove and disassemble the passenger service unit PSU 19H-300 as follows:

1 Remove the front frame assembly 19H-310 from the bracket 19H-385.

2 Remove the set screw 19H-340 and the passenger service unit PSU 19H-300 from the lower part service cabinet 19H-080.

3 Disconnect the passenger service unit PSU 19H-300 from the electrical supply.

4 Remove the set screw 19H-370 and the shaver outlet 19H-360 from the bracket 19H-385.

5 Remove the sign housing 19H-350 from the bracket 19H-385.

6 Remove the call switch wire-harness 19H-380 from the bracket 19H-385.

TASK 25-41-51-000-816-K01
D2549010402400 D2549010403400 D2549010406400 D2549020407400

172. Removal and Disassembly of the Service Cabinet

A. General

A complete disassembly of the component is not necessary and not recommended.

Do not disassemble the component more than it is necessary for:

- Cleaning
- Visual Inspection
- Replacement of defective parts.

B. Job Set-up Information
(1) Consumable Materials

REFERENCE	DESIGNATION
08-001	General Purpose Adhesive Honeycomb Filler

Table 3603
Consumable Materials

C. Procedure

WARNING: **BE CAREFUL WHEN YOU USE SOLVENTS/CLEANING AGENTS, SEALANTS AND OTHER MATERIALS. OBEY THE MATERIAL MANUFACTURER'S INSTRUCTIONS AND THE LOCAL REGULATIONS. MAKE SURE THAT THERE IS A GOOD FLOW OF AIR THROUGH THE WORK AREA. DO NOT BREATHE THE FUMES. DO NOT SMOKE. DO NOT USE THESE MATERIALS NEAR A FLAME, SPARKS OR SOURCES OF HEAT. USE PROTECTIVE CLOTHING, GOGGLES AND GLOVES. IF YOU GET ONE OF THESE MATERIALS ON YOUR SKIN OR IN YOUR EYES, FLUSH IT AWAY WITH A FLOW OF CLEAN WATER. IF YOU GET ONE OF THESE MATERIALS IN YOUR MOUTH, GET IMMEDIATE MEDICAL AID. IN GENERAL, THESE MATERIALS ARE POISONOUS, FLAMMABLE AND SKIN IRRITANTS.**

CAUTION: **DO ALL THE WORK ON A CLEAN, SOFT SURFACE TO PREVENT DAMAGE TO THE COMPONENTS.**

SUB TASK 25-41-51-000-137-A01

1. Removal and Disassembly of the Service Cabinet (19J-1)

NOTE: **See TABLE 3604 for the references for the replacement procedure of permanent installed parts.**

More data for bonded parts are given in column SEE REPAIR TASK. Use the data for the selection of the related repair solution.

IPL FIG. ITEM	COMPONENT PART NAME	IPL FIG. ITEM	REPLACEMENT PART NAME	SEE REPAIR TASK
19J-001	Service Cabinet	19J-130	Washer	Replacement of the Riveted Parts
19J-001 19J-010 19J-080	Service Cabinet Service Cabinet Assembly Lower Part Service Cabinet	19J-140	Mount	Replacement of the Bonded Parts Material No. 08-001 General Purpose Adhesive Honeycomb Filler
19J-001 19J-010	Service Cabinet Service Cabinet Assembly	19J-170	Bushing	Replacement of the Bonded Parts Material No. 08-001 General Purpose Adhesive Honeycomb Filler

Table 3604
Reference list for the replacement of permanent installed parts

19J-001 19J-220	Service Cabinet Angle Assembly	19J-230 19J-240	Angle Bumper	Replacement of the Bonded Parts self adhesive
19J-001 19J-420 19J-430	Service Cabinet Passenger Service Unit PSU Front Frame Assembly	19J-440 19J-450	Foil Frame	Replacement of the Bonded Parts self adhesive

Table 3604
Reference list for the replacement of permanent installed parts

(b) Remove the service box assembly 19J-350 from the service cabinet assembly 19J-010.

(c) Disassemble the service box assembly 19J-350 as follows:

1 Remove the drawer 19J-360 from the drawer guides 19J-370.

2 Remove the screws 19J-410 and the drawer guides 19J-370.

3 Remove the screws 19J-390, the handle 19J-400 and the handle holders 19J-380.

(d) Remove and disassemble the service cabinet assembly 19J-010 as follows:

1 Remove the screws 19J-040, the washers 19J-060, the nuts 19J-050 and the block 19J-030 from the upper part service cabinet assembly 19J-020.

2 Remove the screws 19J-320, the washers 19J-330, the nuts 19J-340 and the angle assemblies 19J-220 from the center part service cabinet 19J-070.

3 Remove the screws 19J-280, the washers 19J-270 and the upper part service cabinet assembly 19J-020.

4 Remove the hinge pin 19J-160 and the center part service cabinet 19J-070 from the hinge 19J-150.

5 Remove the screws 19J-280, the washers 19J-270 and the hinge 19J-150 from the lavatory structure.

6 Remove the screws 19J-290 and the lower part service cabinet 19J-080 from the angle brackets 19J-250.

7 Remove the screws 19J-280, the washers 19J-270 and the lower part service cabinet 19J-080.
- a Remove the service-cabinet flap 19J-090 from the lower part service cabinet 19J-080.
- b Remove the screws 19J-110, the nuts 19J-120 and the magnetic catch 19J-100 from the service-cabinet flap 19J-090.

8 Remove the screws 19J-260, the washers 19J-270 and the angle brackets 19J-250.

9 Remove the screws 19J-200 and the washers 19J-210 from the center part service cabinet 19J-070.

WARNING: BE VERY CAREFUL WHEN YOU REMOVE OR INSTALL THE SPRING. BECAUSE THERE IS REMAINING TENSION IN THE SPRING, IT CAN CAUSE YOU INJURY.

10 Remove the nuts 19J-300, the washers 19J-310, the bushings 19J-180 and the spring loaded latches 19J-190 from the upper part service cabinet assembly 19J-020 and from the lower part service cabinet 19J-080.

(e) Remove and disassemble the passenger service unit PSU 19J-420 as follows:

1 Remove the front frame assembly 19J-430 from the bracket 19J-510.

2 Remove the set screw 19J-460 and the passenger service unit PSU 19J-420 from the lower part service cabinet 19J-080.

3 Disconnect the passenger service unit PSU 19J-420 from the electrical supply.

4 Remove the sign housing 19J-470 from the bracket 19J-510.

5 Remove the set screw 19J-490 and the shaver outlet 19J-480 from the bracket 19J-510.

6 Remove the call switch wire-harness 19J-500 from the bracket 19J-510.

TASK 25-41-51-000-816-L01
D2549030610200 D2549030701200

173. Removal and Disassembly of the Service Cabinet

A. General

A complete disassembly of the component is not necessary and not recommended.

Do not disassemble the component more than it is necessary for:

- Cleaning
- Visual Inspection
- Replacement of defective parts.

B. Job Set-up Information
(1) Consumable Materials

REFERENCE	DESIGNATION
08-001	General Purpose Adhesive Honeycomb Filler

Table 3605
Consumable Materials

C. Procedure

WARNING: **BE CAREFUL WHEN YOU USE SOLVENTS/CLEANING AGENTS, SEALANTS AND OTHER MATERIALS. OBEY THE MATERIAL MANUFACTURER'S INSTRUCTIONS AND THE LOCAL REGULATIONS. MAKE SURE THAT THERE IS A GOOD FLOW OF AIR THROUGH THE WORK AREA. DO NOT BREATHE THE FUMES. DO NOT SMOKE. DO NOT USE THESE MATERIALS NEAR A FLAME, SPARKS OR SOURCES OF HEAT. USE PROTECTIVE CLOTHING, GOGGLES AND GLOVES. IF YOU GET ONE OF THESE MATERIALS ON YOUR SKIN OR IN YOUR EYES, FLUSH IT AWAY WITH A FLOW OF CLEAN WATER. IF YOU GET ONE OF THESE MATERIALS IN YOUR MOUTH, GET IMMEDIATE MEDICAL AID. IN GENERAL, THESE MATERIALS ARE POISONOUS, FLAMMABLE AND SKIN IRRITANTS.**

CAUTION: **DO ALL THE WORK ON A CLEAN, SOFT SURFACE TO PREVENT DAMAGE TO THE COMPONENTS.**

SUB TASK 25-41-51-000-138-A01
D2549030610200 D2549030701200

1. Removal and Disassembly of the Service Cabinet (19K-1)

NOTE: **See TABLE 3606 for the references for the replacement procedures of permanent installed parts.**

More data for bonded parts are given in column SEE REPAIR TASK. Use the data for the selection of the related repair solution.

IPL FIG. ITEM	COMPONENT PART NAME	IPL FIG. ITEM	REPLACEMENT PART NAME	SEE REPAIR TASK
19K-001	Service Cabinet	19K-140	Washer	Replacement of the Riveted Parts
19K-001 19K-010	Service Cabinet Service Cabinet Assembly	19K-170	Bushing	Replacement of the Bonded Parts Material No. 08-001 General Purpose Adhesive Honeycomb Filler
19K-001 19K-200	Service Cabinet Angle Assembly	19K-210 19K-220	Angle Bumper	Replacement of the Bonded Parts self adhesive
19K-001 19K-420 19K-430	Service Cabinet Passenger Service Unit PSU Front Frame Assembly	19K-440 19K-450	Foil Frame	Replacement of the Bonded Parts self adhesive

Table 3606
Reference list for the replacement of permanent installed parts

(a) Remove the service box assembly 19K-350 from the service cabinet assembly 19K-010.

(b) Disassemble the service box assembly 19K-350 as follows:

1 Remove the drawer 19K-360 from the drawer guides 19K-370.

2 Remove the screws 19K-410 and the drawer guides 19K-370.

3 Remove the screws 19K-390, the handle 19K-400 and the handle holders 19K-380.

(c) Remove and disassemble the service cabinet assembly 19K-010 as follows:

1 Remove the screws 19K-040, the washers 19K-050, the nuts 19K-060 and the block 19K-030 from the upper part service cabinet assembly 19K-020.

2 Remove the screws 19K-280, the washers 19K-310, the nuts 19K-330 and the angle assemblies 19K-200 from the center part service cabinet 19K-070.

3 Remove the screws 19K-270, the washers 19K-300 and the upper part service cabinet assembly 19K-020.

4 Remove the hinge pin 19K-160 and the center part service cabinet 19K-070 from the hinge 19K-150.

5 Remove the screws 19K-270, the washers 19K-300 and the hinge 19K-150 from the lavatory structure.

6 Remove the screws 19K-290 and the lower part service cabinet 19K-080 from the angle brackets 19K-230.

7 Remove the screws 19K-270, the washers 19K-300 and the lower part service cabinet 19K-080.
a Remove the service-cabinet flap 19K-100 from the lower part service cabinet 19K-080.
b Remove the screws 19K-090, the nuts 19K-110 and the magnetic catch 19K-130 from the service-cabinet flap 19K-100.

8 Remove the screws 19K-260, the washers 19K-300 and the angle brackets 19K-230.

9 Remove the screws 19K-240 and the washers 19K-250 from the center part service cabinet 19K-070.

WARNING: **BE VERY CAREFUL WHEN YOU REMOVE OR INSTALL THE SPRING. BECAUSE THERE IS REMAINING TENSION IN THE SPRING, IT CAN CAUSE YOU INJURY.**

10 Remove the nuts 19K-340, the washers 19K-320, the bushings 19K-180 and the spring loaded latches 19K-190 from the upper part service cabinet assembly 19K-020 and from the lower part service cabinet 19K-080.

(d) Remove and disassemble the passenger service unit PSU 19K-420 as follows:

1 Remove the front frame assembly 19K-430 from the bracket 19K-510.

2 Remove the set screw 19K-460 and the passenger service unit PSU 19K-420 from the lower part service cabinet 19K-080.

3 Disconnect the passenger service unit PSU 19K-420 from the electrical supply.

4 Remove the sign housing 19K-470 from the bracket 19K-510.

5 Remove the set screw 19K-490 and the shaver outlet 19K-480 from the bracket 19K-510.

6 Remove the call switch wire-harness 19K-500 from the bracket 19K-510.

TASK 25-41-51-000-817-A01

D2549010500000 D2549010500600 D2549010500800 D2549010501200 D2549010501400
D2549010501800 D2549010502200 D2549010502600 D2549010503200 D2549010503600
D2549010503800 D2549010504200 D2549010504400 D2549010504600 D2549010504800
D2549010505000 D2549010505200 D2549010505400 D2549010505600 D2549010505800
D2549010506000 D2549010506400 D2549010507200 D2549010507400 D2549010507600
D2549010507800 D2549010508000 D2549010508200 D2549010508400 D2549010508600
D2549010508800 D2549010509200 D2549010509600 D2549010510000 D2549010510400
D2549010510800 D2549010511000 D2549010511400 D2549010511600 D2549010512400
D2549010513000 D2549010513400 D2549020500000 D2549020500200 D2549020500400
D2549020500600 D2549020500800 D2549020501000 D2549020501200 D2549020501400
D2549020501800 D2549020502000 D2549020502400 D2549020502600 D2549020502800
D2549020503200 D2549020503600 D2549020504000 D2549020504200 D2549020504600
D2549020504800 D2549020505000 D2549020505200 D2549020506000 D2549020506200
D2549020506400 D2549020600000 D2549020600200 D2549020600800 D2549020601000
D2549020601200 D2549020601400 D2549020601600 D2549020601800 D2549020602400
D2549020602600 D2549020603200 D2549020603400 D2549020603600 D2549020603800
D2549020604000 D2549020604200 D2549020604400 D2549020604600 D2549020604800
D2549020605200 D2549020605400 D2549020605800 D2549020606000 D2549020606400
D2549020606600 D2549020606800 D2549020607000 D2549020607200 D2549020607400
D2549020607600 D2549020607800 D2549020608600 D2549020608800 D2549020609000
D2549020609400 D2549020609600 D2549020609800 D2549020610400 D2549020610600
D2549020610800 D2549020611000 D2549020611200 D2549020611400 D2549020611800
D2549020701200 D2549030500400 D2549030500600 D2549030500800 D2549030501000
D2549030501200 D2549030501400 D2549030501800 D2549030502000 D2549030502400
D2549030502600 D2549030502800 D2549030503000 D2549030503400 D2549030503600
D2549030504000 D2549030504600 D2549030504800 D2549030505200 D2549030505400
D2549030505600 D2549030505800 D2549030506200 D2549030506400 D2549030506600
D2549030506800 D2549030507000 D2549030507200 R225401133-000 R225401137-000
R225401137-002 R225401137-010 R225401139-000 R225401145-000 R225401146-000
R225401146-002 R225401159-000 R225401172-002 R225401176-000 R225401188-000
R225401188-002 R225401188-004 R225401188-006

174. Removal and Disassembly of the Nursing Table

A. General

A complete disassembly of the component is not necessary and not recommended.

Do not disassemble the component more than it is necessary for:

- Cleaning
- Visual Inspection
- Replacement of defective parts.

B. Procedure

WARNING: **BE CAREFUL WHEN YOU USE SOLVENTS/CLEANING AGENTS, SEALANTS AND OTHER MATERIALS. OBEY THE MATERIAL MANUFACTURER'S INSTRUCTIONS AND THE LOCAL REGULATIONS. MAKE SURE THAT THERE IS A GOOD FLOW OF AIR THROUGH THE WORK AREA. DO NOT BREATHE THE FUMES. DO NOT SMOKE. DO NOT USE THESE MATERIALS NEAR A FLAME, SPARKS OR SOURCES OF HEAT. USE PROTECTIVE CLOTHING, GOGGLES AND GLOVES. IF YOU GET ONE OF THESE MATERIALS ON YOUR SKIN OR IN YOUR EYES, FLUSH IT AWAY WITH A FLOW OF CLEAN WATER. IF YOU GET ONE OF THESE MATERIALS IN YOUR MOUTH, GET IMMEDIATE MEDICAL AID. IN GENERAL, THESE MATERIALS ARE POISONOUS, FLAMMABLE AND SKIN IRRITANTS.**

CAUTION: **DO ALL THE WORK ON A CLEAN, SOFT SURFACE TO PREVENT DAMAGE TO THE COMPONENTS.**

SUB TASK 25-41-51-000-110-A01

1. Removal and Disassembly of the Nursing Table (20-1)

(a) Remove and disassemble the nursing table assembly 20-010 as follows:

1 Remove the screws 20-140, the spacers 20-130 and the rollers 20-070 from the lateral guides 20-013, 20-015.

2 Remove the screws 20-150 and the lateral guides 20-013, 20-015 from the lavatory structure.

3 Remove the screws 20-120 and the stops 20-020 from the lateral guides 20-013, 20-015.

4 Remove the washers 20-085, 20-090, the bushings 20-080 and the lateral guides 20-013, 20-015 from the swivel levers 20-030, 20-040, 20-050, 20-060.

5 Remove the bushings 20-110, the washers 20-085, 20-100 and the swivel levers 20-050, 20-060 from the nursing table assembly 20-010.

6 Remove the bushings 20-080, the washers 20-085, 20-090 and the swivel levers 20-030, 20-040 from the nursing table assembly 20-010.

TASK 25-41-51-000-817-B01

D2547160900200 D2547160900400 D2547161903000 D2549010400000 D2549010400200
D2549010400400 D2549010400600 D2549010400800 D2549010401000 D2549010401400
D2549010401600 D2549010402000 D2549010402200 D2549010402400 D2549010402600
D2549010402800 D2549010403000 D2549010403200 D2549010403400 D2549010403600
D2549010403800 D2549010404000 D2549010404200 D2549010404400 D2549010404600
D2549010404800 D2549010405000 D2549010405200 D2549010405400 D2549010405800
D2549010406000 D2549010406200 D2549010406400 D2549010406800 D2549010407000
D2549010500400 D2549010501000 D2549010501600 D2549010502000 D2549010502400
D2549010502800 D2549010503400 D2549010506200 D2549010506800 D2549010507000
D2549010509000 D2549010509400 D2549010509800 D2549010510200 D2549010510600
D2549010511200 D2549010511800 D2549010512000 D2549010512200 D2549010512600
D2549010513200 D2549010513600 D2549010513800 D2549010514000 D2549010514200
D2549010514400 D2549010514600 D2549010514800 D2549010600000 D2549010600200
D2549010600400 D2549010600600 D2549010600800 D2549010601000 D2549010601200
D2549010601400 D2549010601600 D2549010601800 D2549010602000 D2549010602200
D2549010602400 D2549010602600 D2549010602800 D2549010603000 D2549010603200
D2549010603400 D2549010603600 D2549010603800 D2549010604000 D2549010604200
D2549010604400 D2549010604600 D2549010604800 D2549010605000 D2549010605200
D2549010605600 D2549010605800 D2549010606000 D2549010606200 D2549010606400
D2549010606600 D2549010606800 D2549010607000 D2549010607200 D2549010607400
D2549010607600 D2549010607800 D2549010608200 D2549010608400 D2549010608600
D2549010608800 D2549010609000 D2549010609200 D2549010609400 D2549010609600
D2549010609800 D2549010610000 D2549010610200 D2549010610400 D2549010610600
D2549010610800 D2549010611000 D2549010611200 D2549010611400 D2549010611600
D2549010611800 D2549010612000 D2549010612200 D2549010612400 D2549010612600
D2549010613000 D2549010613400 D2549010613600 D2549010613800 D2549010614200
D2549010614400 D2549010614600 D2549010614800 D2549020300400 D2549020300600
D2549020300800 D2549020301000 D2549020301800 D2549020302000 D2549020302800
D2549020400000 D2549020400200 D2549020400400 D2549020400600 D2549020401000
D2549020401200 D2549020401400 D2549020401600 D2549020402000 D2549020402200
D2549020402400 D2549020402600 D2549020403000 D2549020403200 D2549020403400
D2549020403600 D2549020403800 D2549020404000 D2549020404200 D2549020404400
D2549020404600 D2549020404800 D2549020405000 D2549020405200 D2549020405400
D2549020405600 D2549020405800 D2549020406000 D2549020406200 D2549020406400
D2549020406600 D2549020406800 D2549020407000 D2549020407200 D2549020407400
D2549020407600 D2549020407800 D2549020408000 D2549020408200 D2549020408600
D2549020408800 D2549020409000 D2549020409200 D2549020409400 D2549020409600
D2549020409800 D2549020410200 D2549020410400 D2549020410600 D2549020410800
D2549020411000 D2549020411400 D2549020411600 D2549020412000 D2549020412400
D2549020412600 D2549020412800 D2549020413000 D2549020413200 D2549020413400
D2549020413600 D2549020413800 D2549020414000 D2549020414200 D2549020414600
D2549020501600 D2549020502200 D2549020503000 D2549020503400 D2549020503800
D2549020504400 D2549020505400 D2549020505600 D2549020505800 D2549020506600
D2549020506800 D2549020507000 D2549020507200 D2549020507400 D2549020507600
D2549020507800 D2549020508000 D2549020508200 D2549020508400 D2549020508600
D2549020508800 D2549020509000 D2549020509200 D2549020509800 D2549020510000

D2549020510400 D2549020510800 D2549020511000 D2549020511200 D2549020511600
D2549020511800 D2549020512000 D2549020512200 D2549020512600 D2549020512800
D2549020513000 D2549020513200 D2549020513400 D2549020513600 D2549020513800
D2549020514000 D2549020514200 D2549020514400 D2549020514600 D2549020514800
D2549020600400 D2549020602000 D2549020602200 D2549020602800 D2549020603000
D2549020605000 D2549020605600 D2549020608200 D2549020608400 D2549020609200
D2549020610000 D2549020610200 D2549020611600 D2549020612000 D2549020612200
D2549020612400 D2549020612600 D2549020612800 D2549020613000 D2549020613200
D2549020613600 D2549020613800 D2549020614000 D2549020614400 D2549020614600
D2549020614800 D2549020700000 D2549020700200 D2549020700400 D2549020700600
D2549020700800 D2549020701000 D2549020701400 D2549020701600 D2549020701800
D2549020702000 D2549020702200 D2549020702400 D2549020702600 D2549020702800
D2549020703200 D2549020703400 D2549020703600 D2549020703800 D2549020704000
D2549020704200 D2549020704400 D2549020704600 D2549020704800 D2549020705000
D2549020705200 D2549020705400 D2549020705600 D2549020705800 D2549020706000
D2549020706200 D2549020706400 D2549020706600 D2549020706800 D2549020707000
D2549020707200 D2549020707400 D2549020707600 D2549020707800 D2549020708000
D2549020708200 D2549020708400 D2549020708600 D2549020708800 D2549020709000
D2549020709200 D2549020709400 D2549020709600 D2549020709800 D2549020710200
D2549020710400 D2549020710600 D2549020710800 D2549020711000 D2549020711200
D2549020711400 D2549020711600 D2549020712200 D2549020712400 D2549020712800
D2549020713200 D2549020713400 D2549020713600 D2549020713800 D2549020714000
D2549020714400 D2549020714600 D2549020800000 D2549020800200 D2549020800400
D2549020800600 D2549020800800 D2549020801000 D2549020801200 D2549020801400
D2549020801600 D2549020801800 D2549020802000 D2549020802200 D2549020802600
D2549020802800 D2549020803000 D2549020803200 D2549020803400 D2549020803600
D2549020803800 D2549020804000 D2549020804200 D2549020804400 D2549020804800
D2549020805000 D2549020805400 D2549020805600 D2549020805800 D2549020806000
D2549020806200 D2549020806600 D2549020806800 D2549020807000 D2549020807200
D2549020807400 D2549020807600 D2549020807800 D2549020808200 D2549020808400
D2549020808600 D2549020808800 D2549020809000 D2549020809400 D2549020809600
D2549020809800 D2549020810000 D2549020810200 D2549020810400 D2549020810600
D2549020810800 D2549020811200 D2549020811400 D2549020811600 D2549020811800
D2549020812000 D2549020812200 D2549020812400 D2549020812600 D2549020812800
D2549020813000 D2549020813400 D2549020813600 D2549020813800 D2549020814000
D2549020814200 D2549020814400 D2549020814600 D2549020814800 D2549030400000
D2549030400200 D2549030400400 D2549030400600 D2549030401000 D2549030401200
D2549030401400 D2549030401600 D2549030401800 D2549030402000 D2549030402200
D2549030402400 D2549030402600 D2549030402800 D2549030403000 D2549030403400
D2549030403600 D2549030403800 D2549030404000 D2549030404200 D2549030404400
D2549030404600 D2549030404800 D2549030405000 D2549030405200 D2549030405400
D2549030405600 D2549030405800 D2549030406000 D2549030406400 D2549030406600
D2549030406800 D2549030407000 D2549030407200 D2549030407400 D2549030407600
D2549030407800 D2549030408000 D2549030408400 D2549030409000 D2549030409200
D2549030409800 D2549030410000 D2549030410400 D2549030411200 D2549030411400
D2549030411600 D2549030411800 D2549030412000 D2549030412400 D2549030412600
D2549030412800 D2549030413000 D2549030413200 D2549030413600 D2549030414400

D2549030414800 D2549030500200 D2549030501600 D2549030502200 D2549030503200
D2549030503800 D2549030504200 D2549030506000 D2549030507400 D2549030507600
D2549030507800 D2549030508000 D2549030508200 D2549030508400 D2549030508600
D2549030508800 D2549030509000 D2549030509200 D2549030509400 D2549030509600
D2549030509800 D2549030510000 D2549030510200 D2549030510400 D2549030510600
D2549030510800 D2549030511000 D2549030511200 D2549030511400 D2549030511600
D2549030511800 D2549030512000 D2549030512200 D2549030512400 D2549030512800
D2549030513000 D2549030513200 D2549030513400 D2549030513600 D2549030513800
D2549030514000 D2549030514200 D2549030514400 D2549030514600 D2549030514800
D2549030600000 D2549030600200 D2549030600400 D2549030600600 D2549030600800
D2549030601000 D2549030601200 D2549030601400 D2549030601600 D2549030601800
D2549030602000 D2549030602200 D2549030602400 D2549030602600 D2549030602800
D2549030603000 D2549030603200 D2549030603400 D2549030603600 D2549030603800
D2549030604200 D2549030604400 D2549030604600 D2549030604800 D2549030605000
D2549030605200 D2549030605400 D2549030605600 D2549030605800 D2549030606000
D2549030606200 D2549030606400 D2549030606600 D2549030606800 D2549030607000
D2549030607200 D2549030607400 D2549030607600 D2549030607800 D2549030608000
D2549030608200 D2549030608400 D2549030608600 D2549030608800 D2549030609000
D2549030609200 D2549030609800 D2549030610000 D2549030610200 D2549030610400
D2549030610600 D2549030611000 D2549030611200 D2549030611400 D2549030611600
D2549030611800 D2549030612000 D2549030612200 D2549030612400 D2549030612600
D2549030612800 D2549030613200 D2549030613400 D2549030613600 D2549030613800
D2549030614000 D2549030614200 D2549030614400 D2549030614800 D2549030700000
D2549030700200 D2549030700400 D2549030700800 D2549030701000 D2549030701200
D2549030701400 D2549030702200 D2549030702400 D2549030702600 D2549030702800
D2549030703000 D2549030703400 D2549030703600 D2549030703800 D2549030704600
D2549030705200 D2549040500200 D2549040500400 D2549040500600 D2549040500800
D2549040501000 D2549040501200 D2549040501400 D2549040501600 D2549040501800
D2549040502000 R225401107-000 R225401107-002 R225401107-004 R225401115-000
R225401115-002 R225401128-000 R225401134-000 R225401134-002 R225401134-004
R225401134-006 R225401134-008 R225401134-010 R225401134-012 R225401134-014
R225401134-016 R225401134-018 R225401134-020 R225401134-022 R225401134-024
R225401134-026 R225401134-028 R225401134-030 R225401134-032 R225401134-034
R225401134-036 R225401134-038 R225401136-000 R225401136-004 R225401136-006
R225401136-008 R225401136-010 R225401136-012 R225401136-014 R225401136-016
R225401136-018 R225401136-020 R225401136-022 R225401136-024 R225401137-004
R225401137-006 R225401137-008 R225401137-012 R225401137-014 R225401137-016
R225401142-000 R225401142-002 R225401145-002 R225401145-004 R225401145-006
R225401145-008 R225401145-010 R225401145-012 R225401145-014 R225401152-000
R225401152-002 R225401152-004 R225401152-006 R225401152-008 R225401152-010
R225401153-000 R225401160-000 R225401160-002 R225401168-000 R225401168-002
R225401168-004 R225401168-006 R225401168-008 R225401168-010 R225401168-012
R225401168-014 R225401168-016 R225401168-018 R225401168-020 R225401168-024
R225401168-026 R225401168-028 R225401172-000 R225401172-004 R225401172-006
R225401172-008 R225401172-010 R225401172-012 R225401172-014 R225401172-016
R225401172-018 R225401175-000 R225401175-002 R225401183-000 R225401183-002
R225401183-004 R225401183-006 R225401183-008 R225401192-000 R225401192-002

R225401195-000 R225401196-000 R225401196-002 R225401196-004 R225401196-006
R225401196-008 R225401196-010 R225401196-012 R225401196-014 R225401196-016
R225401196-018 R225401196-020 R225401196-022 R225401196-024 R225401196-034
R225401196-036 R225401196-038 R225401196-040 R225401196-042 R225401196-044
R225401196-046 R225401196-048 R225401196-050 R225401196-052 R225401196-054
R225401196-056 R225401196-058 R225401196-060 R225401196-062 R225401196-064
R225401196-066 R225401196-068 R225401196-070 R225401199-000 R225401199-002
R225401199-004 R225401199-006 R225401199-008 R225401199-010 R225401199-012
R225401600-000 R225401600-002 R225401600-004 R225401602-000 R225401603-000
R225401605-000 R225401605-002 R225401609-000 R225401611-000 R225401611-006
R225401611-008 R225401611-010 R225401611-012 R225401611-014 R225401611-016
R225401611-018 R225401611-020 R225401614-000 R225401618-000 R225401618-002
R225401619-000 R225401619-002 R225401622-000 R225401622-002 R225401624-000
R225401625-000 R225401627-000 R225401627-002 R225401627-004 R225401629-000
R225401629-002 R225401639-000 R225401639-002 R225401643-000 R225401643-002
R225401643-004 R225401643-006 R225401643-008 R225401646-000 R225401646-002
R225401647-000 R225401648-000 R225401648-002 R225401648-004 R225401648-006
R225401648-008 R225401649-000 R225401656-000 R225401656-002 R225401658-000
R225401662-000 R225401662-002 R225401673-000 R225401673-002 R225401673-004
R225401673-006 R225401676-000 R225401683-000 R225401685-000 R225401685-002
R225401688-000 R225401689-004 R225401689-006 R225401691-000 R225401691-002
R225401693-000 R225401697-000 R225401697-002 R225401803-000 R225401803-002
R225401811-000

175. Removal and Disassembly of the Nursing Table

A. General

A complete disassembly of the component is not necessary and not recommended.

Do not disassemble the component more than it is necessary for:

- Cleaning
- Visual Inspection
- Replacement of defective parts.

B. Job Set-up Information

(1) Not applicable

C. Procedure

WARNING: **BE CAREFUL WHEN YOU USE SOLVENTS/CLEANING AGENTS, SEALANTS AND OTHER MATERIALS. OBEY THE MATERIAL MANUFACTURER'S INSTRUCTIONS AND THE LOCAL REGULATIONS. MAKE SURE THAT THERE IS A GOOD FLOW OF AIR THROUGH THE WORK AREA. DO NOT BREATHE THE FUMES. DO NOT SMOKE. DO NOT USE THESE MATERIALS NEAR A FLAME, SPARKS OR SOURCES OF HEAT. USE PROTECTIVE CLOTHING, GOGGLES AND GLOVES. IF YOU GET ONE OF THESE MATERIALS ON YOUR SKIN OR IN YOUR EYES, FLUSH IT AWAY WITH A FLOW OF CLEAN WATER. IF YOU GET ONE OF THESE MATERIALS IN YOUR MOUTH, GET IMMEDIATE MEDICAL AID. IN GENERAL, THESE MATERIALS ARE POISONOUS, FLAMMABLE AND SKIN IRRITANTS.**

CAUTION: **DO ALL THE WORK ON A CLEAN, SOFT SURFACE TO PREVENT DAMAGE TO THE COMPONENTS.**

SUB TASK 25-41-51-000-111-A01

1. Removal and Disassembly of the Nursing Table (20A-1)

NOTE: **See TABLE 3607 for the references for the replacement procedures of permanent installed parts.**

More data for bonded parts are given in column SEE REPAIR TASK. Use the data for the selection of the related repair solution.

IPL FIG. ITEM	COMPONENT PART NAME	IPL FIG. ITEM	REPLACEMENT PART NAME	SEE REPAIR TASK
20A-001	Nursing Table	20A-100	Bumper	Replacement of the Bonded Parts self adhesive

Table 3607
Reference list for the replacement of permanent installed parts

(a) Remove the screws 20A-090, 20A-092 and the hook assembly 20A-080 from the lavatory structure.

(b) Remove the screws 20A-090 and the nursing table assembly 20A-010 from the lavatory structure.

(c) Disassemble the nursing table assembly 20A-010 as follows:

1 Remove the screws 20A-030 and the hinge 20A-040.

2 Remove the screws 20A-030 and the latch assembly 20A-020.

3 Remove the bumpers 20A-060, 20A-070.

TASK 25-41-51-000-817-C01

D2549010401800 D2549010405600 D2549010613200 D2549020300000 D2549020301600 D2549020411200 D2549020411800 D2549020412200 D2549020414800 D2549020509600 D2549020510600 D2549020710000 D2549020713000 D2549020802400 D2549020805200 D2549020806400 D2549030408200 D2549030408600 D2549030409400 D2549030409600 D2549030410200 D2549030410600 D2549030410800 D2549030412200 D2549030413400 D2549030414000 D2549030414200 D2549030414600 D2549030614600 D2549030700600 D2549030701600 D2549030701800 D2549030702000 D2549030703200 D2549030704000 D2549030704200 D2549030704400 D2549030704800 D2549030705600 R225401613-000 R225401671-000 R225401671-002 R225401675-000 R225401808-000 R225401814-000

176. Removal and Disassembly of the Nursing Table

A. General

A complete disassembly of the component is not necessary and not recommended.

Do not disassemble the component more than it is necessary for:

- Cleaning
- Visual Inspection
- Replacement of defective parts.

B. Job Set-up Information

(1) Not applicable

C. Procedure

WARNING: BE CAREFUL WHEN YOU USE SOLVENTS/CLEANING AGENTS, SEALANTS AND OTHER MATERIALS. OBEY THE MATERIAL MANUFACTURER'S INSTRUCTIONS AND THE LOCAL REGULATIONS. MAKE SURE THAT THERE IS A GOOD FLOW OF AIR THROUGH THE WORK AREA. DO NOT BREATHE THE FUMES. DO NOT SMOKE. DO NOT USE THESE MATERIALS NEAR A FLAME, SPARKS OR SOURCES OF HEAT. USE PROTECTIVE CLOTHING, GOGGLES AND GLOVES. IF YOU GET ONE OF THESE MATERIALS ON YOUR SKIN OR IN YOUR EYES, FLUSH IT AWAY WITH A FLOW OF CLEAN WATER. IF YOU GET ONE OF THESE MATERIALS IN YOUR MOUTH, GET IMMEDIATE MEDICAL AID. IN GENERAL, THESE MATERIALS ARE POISONOUS, FLAMMABLE AND SKIN IRRITANTS.

CAUTION: DO ALL THE WORK ON A CLEAN, SOFT SURFACE TO PREVENT DAMAGE TO THE COMPONENTS.

SUB TASK 25-41-51-000-112-A01

1. Removal and Disassembly of the Nursing Table (20B-1)

NOTE: **See TABLE 3608 for the references for the replacement procedures of permanent installed parts.**

More data for bonded parts are given in column SEE REPAIR TASK. Use the data for the selection of the related repair solution.

IPL FIG. ITEM	COMPONENT PART NAME	IPL FIG. ITEM	REPLACEMENT PART NAME	SEE REPAIR TASK
20B-001	Nursing Table	20B-100	Bumper	Replacement of the Bonded Parts self adhesive

Table 3608
Reference list for the replacement of permanent installed parts

(a) Remove the screws 20B-090 and the hook assembly 20B-080 from the lavatory structure.

(b) Remove the screws 20B-090 and the nursing table assembly 20B-010 from the lavatory structure.

(c) Disassemble the nursing table assembly 20B-010 as follows:

1 Remove the screws 20B-030 and the hinge 20B-040.

2 Remove the screws 20B-030 and the latch assembly 20B-020.

3 Remove the bumpers 20B-060, 20B-070.

TASK 25-41-51-000-817-D01
D2549020400800 D2549020712600 D2549020813200

177. Removal and Disassembly of the Nursing Table

A. General

A complete disassembly of the component is not necessary and not recommended.

Do not disassemble the component more than it is necessary for:

- Cleaning
- Visual Inspection
- Replacement of defective parts.

B. Procedure

WARNING: **BE CAREFUL WHEN YOU USE SOLVENTS/CLEANING AGENTS, SEALANTS AND OTHER MATERIALS. OBEY THE MATERIAL MANUFACTURER'S INSTRUCTIONS AND THE LOCAL REGULATIONS. MAKE SURE THAT THERE IS A GOOD FLOW OF AIR THROUGH THE WORK AREA. DO NOT BREATHE THE FUMES. DO NOT SMOKE. DO NOT USE THESE MATERIALS NEAR A FLAME, SPARKS OR SOURCES OF HEAT. USE PROTECTIVE CLOTHING, GOGGLES AND GLOVES. IF YOU GET ONE OF THESE MATERIALS ON YOUR SKIN OR IN YOUR EYES, FLUSH IT AWAY WITH A FLOW OF CLEAN WATER. IF YOU GET ONE OF THESE MATERIALS IN YOUR MOUTH, GET IMMEDIATE MEDICAL AID. IN GENERAL, THESE MATERIALS ARE POISONOUS, FLAMMABLE AND SKIN IRRITANTS.**

CAUTION: **DO ALL THE WORK ON A CLEAN, SOFT SURFACE TO PREVENT DAMAGE TO THE COMPONENTS.**

SUB TASK 25-41-51-000-113-A01

1. Removal and Disassembly of the Nursing Table (20C-1)

   (a) Remove the screws 20C-130 and the catch 20C-120 from the lavatory structure.

   (b) Remove the screws 20C-030 and the nursing table assembly 20C-010 from the lavatory structure.

   (c) Disassemble the nursing table assembly 20C-010 as follows:

1 Remove the screws 20C-140, the washers 20C-150, the spacer strip assembly 20C-100 and the hinge 20C-040.

2 Remove the screws 20C-030 and the latch assembly 20C-020.

3 Remove the bumpers 20C-060, 20C-110.

4 Remove the screws 20C-080, the washers 20C-090 and the belt 20C-070.

TASK 25-41-51-000-817-E01
D2549020712000

178. Removal and Disassembly of the Nursing Table

A. General

- Not applicable

B. Procedure

SUB TASK 25-41-51-000-114-A01
D2549020712000

1. Removal and Disassembly of the Nursing Table

(a) Not applicable.

TASK 25-41-51-000-818-A01

D2547161903000 D2549010500000 D2549010500400 D2549010500600 D2549010500800
D2549010501000 D2549010501200 D2549010501400 D2549010501600 D2549010501800
D2549010502000 D2549010502200 D2549010502400 D2549010502600 D2549010502800
D2549010503200 D2549010503400 D2549010503600 D2549010503800 D2549010504200
D2549010504400 D2549010504600 D2549010504800 D2549010505000 D2549010505200
D2549010505400 D2549010505600 D2549010505800 D2549010506000 D2549010506200
D2549010506400 D2549010506800 D2549010507000 D2549010507200 D2549010507400
D2549010507600 D2549010507800 D2549010508000 D2549010508200 D2549010508400
D2549010508600 D2549010508800 D2549010509000 D2549010509200 D2549010509400
D2549010509600 D2549010509800 D2549010510000 D2549010510200 D2549010510400
D2549010510800 D2549010511000 D2549010511200 D2549010511400 D2549010511600
D2549010511800 D2549010512000 D2549010512200 D2549010512400 D2549010513000
D2549010513200 D2549010513400 D2549010513600 D2549010513800 D2549010600000
D2549010600400 D2549020500000 D2549020500200 D2549020500400 D2549020500600
D2549020500800 D2549020501000 D2549020501200 D2549020501400 D2549020501600
D2549020501800 D2549020502000 D2549020502400 D2549020502600 D2549020502800
D2549020503000 D2549020503200 D2549020503400 D2549020503600 D2549020503800
D2549020504000 D2549020504200 D2549020504400 D2549020504600 D2549020504800
D2549020505000 D2549020505200 D2549020505400 D2549020505800 D2549020506000
D2549020506200 D2549020506400 D2549020600000 D2549020600200 D2549020600400
D2549020600800 D2549020601000 D2549020601200 D2549020601400 D2549020601600
D2549020601800 D2549020602000 D2549020602400 D2549020602600 D2549020602800
D2549020603000 D2549020603200 D2549020603400 D2549020603600 D2549020603800
D2549020604000 D2549020604200 D2549020604400 D2549020604600 D2549020604800
D2549020605000 D2549020605200 D2549020605400 D2549020605600 D2549020605800
D2549020606000 D2549020606400 D2549020606600 D2549020606800 D2549020607000
D2549020607200 D2549020607400 D2549020607600 D2549020607800 D2549020608200
D2549020608400 D2549020608600 D2549020608800 D2549020609000 D2549020609200
D2549020609400 D2549020609600 D2549020609800 D2549020610000 D2549020610200
D2549020610400 D2549020610600 D2549020610800 D2549020611000 D2549020611200
D2549020611400 D2549020611600 D2549020611800 D2549020701200 D2549020703200
D2549020708400 D2549030500200 D2549030500400 D2549030500600 D2549030500800
D2549030501000 D2549030501200 D2549030501400 D2549030501600 D2549030501800
D2549030502000 D2549030502200 D2549030502400 D2549030502600 D2549030502800
D2549030503000 D2549030503200 D2549030503400 D2549030503600 D2549030504000
D2549030504600 D2549030504800 D2549030505200 D2549030505400 D2549030505600
D2549030505800 D2549030506000 D2549030506200 D2549030506400 D2549030506600
D2549030506800 D2549030507000 D2549030507200 R225401107-000 R225401107-002
R225401107-004 R225401115-002 R225401128-000 R225401133-000 R225401134-000
R225401134-002 R225401134-004 R225401136-016 R225401137-000 R225401137-002
R225401137-010 R225401137-012 R225401139-000 R225401145-000 R225401146-000

R225401146-002 R225401159-000 R225401160-002 R225401172-002 R225401175-000 R225401176-000 R225401188-000 R225401188-002 R225401188-004 R225401188-006

179. Disassembly of the Ventilation System

A. General

A complete disassembly of the component is not necessary and not recommended.

Do not disassemble the component more than it is necessary for:

- Cleaning
- Visual Inspection
- Replacement of defective parts.

B. Job Set-up Information
(1) Consumable Materials

REFERENCE	DESIGNATION
08-010A	Epoxy Resin and Hardener Adhesive
08-026	Adhesive/Sealant one Part, RTV Silicone Rubber

Table 3609
Consumable Materials

C. Procedure

WARNING: **BE CAREFUL WHEN YOU USE SOLVENTS/CLEANING AGENTS, SEALANTS AND OTHER MATERIALS. OBEY THE MATERIAL MANUFACTURER'S INSTRUCTIONS AND THE LOCAL REGULATIONS. MAKE SURE THAT THERE IS A GOOD FLOW OF AIR THROUGH THE WORK AREA. DO NOT BREATHE THE FUMES. DO NOT SMOKE. DO NOT USE THESE MATERIALS NEAR A FLAME, SPARKS OR SOURCES OF HEAT. USE PROTECTIVE CLOTHING, GOGGLES AND GLOVES. IF YOU GET ONE OF THESE MATERIALS ON YOUR SKIN OR IN YOUR EYES, FLUSH IT AWAY WITH A FLOW OF CLEAN WATER. IF YOU GET ONE OF THESE MATERIALS IN YOUR MOUTH, GET IMMEDIATE MEDICAL AID. IN GENERAL, THESE MATERIALS ARE POISONOUS, FLAMMABLE AND SKIN IRRITANTS.**

CAUTION: **DO ALL THE WORK ON A CLEAN, SOFT SURFACE TO PREVENT DAMAGE TO THE COMPONENTS.**

SUB TASK 25-41-51-040-056-A01

D2547161903000 D2549010500000 D2549010500400 D2549010500600
D2549010500800 D2549010501000 D2549010501200 D2549010501400
D2549010501600 D2549010501800 D2549010502000 D2549010502200
D2549010502400 D2549010502600 D2549010502800 D2549010503200
D2549010503400 D2549010503600 D2549010503800 D2549010504200
D2549010504400 D2549010504600 D2549010504800 D2549010505000
D2549010505200 D2549010505400 D2549010505600 D2549010505800
D2549010506000 D2549010506200 D2549010506400 D2549010506800
D2549010507000 D2549010507200 D2549010507400 D2549010507600
D2549010507800 D2549010508000 D2549010508200 D2549010508400
D2549010508600 D2549010508800 D2549010509000 D2549010509200
D2549010511200 D2549020500000 D2549020500200 D2549020500400
D2549020500600 D2549020500800 D2549020501000 D2549020501200
D2549020501400 D2549020501600 D2549020501800 D2549020502000
D2549020502400 D2549020502600 D2549020502800 D2549020503000
D2549020503200 D2549020503400 D2549020503600 D2549020503800
D2549020504000 D2549020504200 D2549020504400 D2549020504600
D2549020504800 D2549020505000 D2549020505200 D2549020505400
D2549020505800 D2549020506000 D2549020600000 D2549020600200
D2549020600800 D2549020601000 D2549020601200 D2549020601400
D2549020601600 D2549020601800 D2549020602000 D2549020602400
D2549020602600 D2549020602800 D2549020603000 D2549020603200
D2549020603400 D2549020603600 D2549020603800 D2549020604000
D2549020606400 D2549020606600 D2549020607200 D2549030500200
D2549030500400 D2549030500600 D2549030500800 D2549030501000
D2549030501200 D2549030501400 D2549030501600 D2549030501800
D2549030502000 D2549030502200 D2549030502400 D2549030502600
D2549030502800 D2549030503000 D2549030503200 D2549030503400
D2549030503600 R225401107-000 R225401107-002 R225401115-002 R225401133-000
R225401134-000 R225401139-000 R225401145-000 R225401146-000 R225401146-002
R225401188-000 R225401188-002 R225401188-004 R225401188-006

1. Disassembly of the Ventilation System (21-1)

NOTE: **See TABLE 3610 for the references for the replacement procedures of permanent installed parts.**

More data for bonded parts are given in column SEE REPAIR TASK. Use the data for the selection of the related repair solution.

IPL FIG. ITEM	COMPONENT PART NAME	IPL FIG. ITEM	REPLACEMENT PART NAME	SEE REPAIR TASK
21-001	Ventilation System	21-180	Air Extraction Tube	Replacement of the Bonded Parts Material No. 08-010A Epoxy Resin and Hardener Adhesive
21-001	Ventilation System	21-270	Seal	Replacement of the Bonded Parts Material No. 08-026 Adhesive/Sealant one Part, RTV Silicone Rubber

Table 3610
Reference list for the replacement of permanent installed parts

(a) Remove the part of the individual air outlet 21-010 from the service cabinet and from the part of the individual air outlet 21-010.

NOTE: **For further instructions, see CMMV 21-24-19_59579 (individual air outlet).**

NOTE: **For further instructions, see CMMV 21-24-19_83564 (individual air outlet).**

(b) Remove the clamp 21-030 and the part of the individual air outlet 21-010 from the cap 21-040.

(c) Remove the clamp 21-050 and the cap 21-040 from the hose 21-060.

(d) Remove the clamp 21-050 and the hose 21-060 from the tube 21-070.

(e) Remove the screws 21-090, the washers 21-100, the clamps 21-120 and the tube 21-070 from the lavatory rear wall.

(f) Remove the clamp 21-050 and the tube 21-070 from the hose 21-080.

(g) Remove the clamp 21-051 and the hose 21-080.

(h) Remove the clamps 21-190 and the hose 21-200.

(i) Remove the screws 21-160 and the air extraction bracket 21-150 from the ceiling panel.

(j) Remove the screws 21-210, the air extraction grille 21-140 and the air extraction hood 21-130 from the ceiling panel.

SUB TASK 25-41-51-040-056-B01
D2549020600400 R225401128-000

2. Disassembly of the Ventilation System (21-1)

NOTE: **See TABLE 3611 for the references for the replacement procedures of permanent installed parts.**
More data for bonded parts are given in column SEE REPAIR TASK. Use the data for the selection of the related repair solution.

IPL FIG. ITEM	COMPONENT PART NAME	IPL FIG. ITEM	REPLACEMENT PART NAME	SEE REPAIR TASK
21-001	Ventilation System	21-180	Air Extraction Tube	Replacement of the Bonded Parts Material No. 08-010A Epoxy Resin and Hardener Adhesive
21-001	Ventilation System	21-270	Seal	Replacement of the Bonded Parts Material No. 08-026 Adhesive/Sealant one Part, RTV Silicone Rubber

Table 3611
Reference list for the replacement of permanent installed parts

(a) Remove the part of the individual air outlet 21-010 from the service cabinet and from the part of the individual air outlet 21-010.

NOTE: For further instructions, see CMMV 21-24-19_59579 (individual air outlet).

NOTE: For further instructions, see CMMV 21-24-19_83564 (individual air outlet).

(b) Remove the clamp 21-030 and the part of the individual air outlet 21-010 from the cap 21-040.

(c) Remove the clamp 21-050 and the cap 21-040 from the hose 21-060.

(d) Remove the clamp 21-050 and the hose 21-060 from the tube 21-070.

(e) Remove the screws 21-090, the washers 21-100, the clamps 21-120 and the tube 21-070 from the lavatory rear wall.

(f) Remove the clamp 21-050 and the tube 21-070 from the hose 21-080.

(g) Remove the clamp 21-051 and the hose 21-080.

(h) Remove the clamps 21-190 and the hose 21-200.

(i) Remove the screws 21-160 and the air extraction bracket 21-150 from the ceiling panel.

(j) Remove the screws 21-250, the washers 21-260 and the air extraction grille 21-140 from the ceiling panel.

(k) Remove the screws 21-210 and the air extraction hood 21-130 from the ceiling panel.

SUB TASK 25-41-51-040-056-C01

D2549010509400 D2549010509600 D2549010509800 D2549010510000
D2549010510200 D2549010510400 D2549010510800 D2549010511000
D2549010511400 D2549010511600 D2549010511800 D2549010512000
D2549010512200 D2549010512400 D2549010513000 D2549010513200
D2549010513400 D2549010513600 D2549010513800 D2549010600000
D2549010600400 D2549020506200 D2549020506400 D2549020604200
D2549020604400 D2549020604600 D2549020604800 D2549020605000
D2549020605200 D2549020605400 D2549020605600 D2549020605800
D2549020606000 D2549020606800 D2549020607000 D2549020607400
D2549020607600 D2549020607800 D2549020608200 D2549020608400
D2549020608600 D2549020608800 D2549020609000 D2549020609200

D2549020609400 D2549020609600 D2549020609800 D2549020610000 D2549020610200 D2549020610400 D2549020610600 D2549020610800 D2549020611000 D2549020611200 D2549020611400 D2549020611600 D2549020611800 D2549020701200 D2549020703200 D2549020708400 D2549030504000 D2549030504600 D2549030504800 D2549030505200 D2549030505400 D2549030505600 D2549030505800 D2549030506000 D2549030506200 D2549030506400 D2549030506600 D2549030506800 D2549030507000 D2549030507200 R225401107-004 R225401134-002 R225401134-004 R225401136-016 R225401137-000 R225401137-002 R225401137-010 R225401137-012 R225401159-000 R225401160-002 R225401172-002 R225401175-000 R225401176-000

3. Disassembly of the Ventilation System (21-1)

NOTE: **See TABLE 3612 for the references for the replacement procedures of permanent installed parts.**

More data for bonded parts are given in column SEE REPAIR TASK. Use the data for the selection of the related repair solution.

IPL FIG. ITEM	COMPONENT PART NAME	IPL FIG. ITEM	REPLACEMENT PART NAME	SEE REPAIR TASK
21-001	Ventilation System	21-180	Air Extraction Tube	Replacement of the Bonded Parts Material No. 08-010A Epoxy Resin and Hardener Adhesive
21-001	Ventilation System	21-270	Seal	Replacement of the Bonded Parts Material No. 08-026 Adhesive/Sealant one Part, RTV Silicone Rubber

Table 3612
Reference list for the replacement of permanent installed parts

(a) Remove the part of the individual air outlet 21-010 from the service cabinet and from the part of the individual air outlet 21-010.

NOTE: For further instructions, see CMMV 21-24-19_59579 (individual air outlet).

NOTE: For further instructions, see CMMV 21-24-19_83564 (individual air outlet).

(b) Remove the clamp 21-030 and the part of the individual air outlet 21-010 from the cap 21-040.

(c) Remove the clamp 21-050 and the cap 21-040 from the hose 21-060.

(d) Remove the clamp 21-050 and the hose 21-060 from the tube 21-070.

(e) Remove the screws 21-090, the washers 21-100, the clamps 21-120 and the tube 21-070 from the lavatory rear wall.

(f) Remove the clamp 21-050 and the tube 21-070 from the hose 21-080.

(g) Remove the clamp 21-051 and the hose 21-080.

(h) Remove the clamps 21-190 and the hose 21-200.

(i) Remove the screws 21-160 and the air extraction bracket 21-150 from the ceiling panel.

(j) Remove the screws 21-240, the louver 21-140, the grille 21-220 and the fleece 21-230 from the ceiling panel.

(k) Remove the screws 21-210 and the air extraction hood 21-130 from the ceiling panel.

TASK 25-41-51-000-818-B01

D2549010510600 D2549010512600 D2549010514000 D2549010514200 D2549010514400
D2549010514600 D2549010514800 D2549010600200 D2549010600600 D2549010600800
D2549010601000 D2549010601200 D2549010601400 D2549010601600 D2549010601800
D2549010602000 D2549010602200 D2549010602400 D2549010602600 D2549010602800
D2549010603000 D2549010603200 D2549010603400 D2549010603600 D2549010603800
D2549010604000 D2549010604200 D2549010604400 D2549010604600 D2549010604800
D2549010605000 D2549010605200 D2549010605600 D2549010605800 D2549010606000
D2549010606200 D2549010606400 D2549010606600 D2549010606800 D2549010607000
D2549010607200 D2549010607400 D2549010607800 D2549010608200 D2549010608400
D2549010609000 D2549020502200 D2549020505600 D2549020506600 D2549020506800
D2549020507000 D2549020507200 D2549020507400 D2549020507600 D2549020507800
D2549020508000 D2549020508200 D2549020508400 D2549020508600 D2549020508800
D2549020509000 D2549020509200 D2549020509600 D2549020509800 D2549020510000
D2549020510400 D2549020511000 D2549020511200 D2549020511800 D2549020512000
D2549020512200 D2549020512400 D2549020512600 D2549020512800 D2549020513000
D2549020513200 D2549020514000 D2549020514200 D2549020514400 D2549020514600
D2549020514800 D2549020602200 D2549020612000 D2549020612200 D2549020612400
D2549020612600 D2549020612800 D2549020613000 D2549020613200 D2549020613600
D2549020613800 D2549020614000 D2549020614400 D2549020614600 D2549020614800
D2549020700000 D2549020700200 D2549020700400 D2549020700600 D2549020700800
D2549020701000 D2549020701400 D2549020701600 D2549020701800 D2549020702000
D2549020702200 D2549020702400 D2549020702600 D2549020702800 D2549020703400
D2549020703600 D2549020703800 D2549020704000 D2549020704200 D2549020704400
D2549020704600 D2549020704800 D2549020705000 D2549020705200 D2549020705400
D2549020705600 D2549020705800 D2549020706000 D2549020706200 D2549020706400
D2549020706600 D2549020706800 D2549020707000 D2549020707200 D2549020707400
D2549020707600 D2549020707800 D2549020708000 D2549020708200 D2549020708600
D2549020708800 D2549020709000 D2549020709200 D2549020709400 D2549020709600
D2549020709800 D2549020710000 D2549020710200 D2549020710400 D2549020710600
D2549020710800 D2549020711000 D2549020711200 D2549020711400 D2549020711600
D2549020712000 D2549020712200 D2549020712400 D2549020712600 D2549020712800
D2549020713000 D2549020713200 D2549020713400 D2549020713600 D2549020713800
D2549020714400 D2549020714600 D2549020801600 D2549020802800 D2549030503800
D2549030504200 D2549030507400 D2549030507600 D2549030507800 D2549030508000
D2549030508200 D2549030508400 D2549030508600 D2549030508800 D2549030509000
D2549030509200 D2549030509400 D2549030509600 D2549030509800 D2549030510000
D2549030510200 D2549030510400 D2549030510600 D2549030510800 D2549030511000
D2549030511200 D2549030511400 D2549030511600 D2549030511800 D2549030512000
D2549030512200 D2549030512400 D2549030512800 D2549030513000 D2549030513200
D2549030513400 D2549030513600 D2549030513800 D2549030514000 D2549030514200
D2549030514400 D2549030514600 D2549030514800 D2549030600000 D2549030600200
D2549030600400 D2549030600600 D2549030600800 D2549030601000 D2549030601200
D2549030601400 D2549030601600 D2549030601800 D2549030602000 D2549030602200
D2549030602400 D2549030602600 D2549030602800 D2549030603000 D2549030603400
D2549030603600 D2549030603800 D2549030604200 D2549030604400 D2549030604600
D2549030604800 D2549030605000 D2549030605200 D2549030605400 D2549030605600

D2549030605800 D2549030606000 D2549030606200 D2549030606400 D2549030606600
D2549030606800 D2549030607000 D2549030607200 D2549030607400 D2549030607600
D2549030607800 D2549030608000 D2549030608200 D2549030608400 D2549030608600
D2549030608800 D2549030609000 D2549030609200 D2549030610200 D2549030610600
D2549030611200 D2549030611400 D2549030611600 D2549030611800 D2549030612800
D2549030613200 D2549030613400 D2549030614200 D2549030614400 R225401115-000
R225401134-006 R225401134-008 R225401134-010 R225401134-016 R225401134-018
R225401134-020 R225401134-022 R225401134-024 R225401134-026 R225401134-028
R225401136-000 R225401136-010 R225401136-020 R225401136-022 R225401137-004
R225401137-006 R225401137-008 R225401137-014 R225401142-000 R225401142-002
R225401145-002 R225401145-004 R225401145-006 R225401145-012 R225401152-000
R225401152-002 R225401152-004 R225401152-006 R225401153-000 R225401160-000
R225401168-000 R225401168-002 R225401168-004 R225401168-006 R225401168-014
R225401168-016 R225401168-018 R225401168-020 R225401168-028 R225401172-004
R225401172-006 R225401172-008 R225401172-010 R225401172-012 R225401172-014
R225401172-016 R225401175-002 R225401183-000 R225401183-008 R225401192-000
R225401195-000 R225401196-000 R225401196-002 R225401196-004 R225401196-034
R225401196-036 R225401196-046 R225401196-048 R225401196-050 R225401199-002
R225401600-000 R225401600-002 R225401603-000 R225401605-000 R225401605-002
R225401611-008 R225401613-000 R225401614-000 R225401618-000 R225401618-002
R225401619-000 R225401619-002 R225401625-000

180. Disassembly of the Ventilation System

A. General

A complete disassembly of the component is not necessary and not recommended.

Do not disassemble the component more than it is necessary for:

- Cleaning
- Visual Inspection
- Replacement of defective parts.

B. Job Set-up Information
(1) Consumable Materials

REFERENCE	DESIGNATION
08-010A	Epoxy Resin and Hardener Adhesive
08-026	Adhesive/Sealant one Part, RTV Silicone Rubber

Table 3613
Consumable Materials

C. Procedure

WARNING: **BE CAREFUL WHEN YOU USE SOLVENTS/CLEANING AGENTS, SEALANTS AND OTHER MATERIALS. OBEY THE MATERIAL MANUFACTURER'S INSTRUCTIONS AND THE LOCAL REGULATIONS. MAKE SURE THAT THERE IS A GOOD FLOW OF AIR THROUGH THE WORK AREA. DO NOT BREATHE THE FUMES. DO NOT SMOKE. DO NOT USE THESE MATERIALS NEAR A FLAME, SPARKS OR SOURCES OF HEAT. USE PROTECTIVE CLOTHING, GOGGLES AND GLOVES. IF YOU GET ONE OF THESE MATERIALS ON YOUR SKIN OR IN YOUR EYES, FLUSH IT AWAY WITH A FLOW OF CLEAN WATER. IF YOU GET ONE OF THESE MATERIALS IN YOUR MOUTH, GET IMMEDIATE MEDICAL AID. IN GENERAL, THESE MATERIALS ARE POISONOUS, FLAMMABLE AND SKIN IRRITANTS.**

CAUTION: **DO ALL THE WORK ON A CLEAN, SOFT SURFACE TO PREVENT DAMAGE TO THE COMPONENTS.**

SUB TASK 25-41-51-040-057-A01

1. Disassembly of the Ventilation System (21A-1)

NOTE: **See TABLE 3614 for the references for the replacement procedures of permanent installed parts.**

More data for bonded parts are given in column SEE REPAIR TASK. Use the data for the selection of the related repair solution.

IPL FIG. ITEM	COMPONENT PART NAME	IPL FIG. ITEM	REPLACEMENT PART NAME	SEE REPAIR TASK
21A-001	Ventilation System	21A-170	Air Extraction Tube	Replacement of the Bonded Parts Material No. 08-010A Epoxy Resin and Hardener Adhesive
21A-001	Ventilation System	21A-240	Seal	Replacement of the Bonded Parts Material No. 08-026 Adhesive/Sealant one Part, RTV Silicone Rubber

Table 3614
Reference list for the replacement of permanent installed parts

(a) Remove the part of the individual air outlet 21A-010 from the service cabinet and from the part of the individual air outlet 21A-010.

NOTE: **For further instructions, see CMMV 21-24-19_59579 (individual air outlet).**

NOTE: **For further instructions, see CMMV 21-24-19_83564 (individual air outlet).**

(b) Remove the clamp 21A-020 and the part of the individual air outlet 21A-010 from the cap 21A-030.

(c) Remove the clamp 21A-040 and the cap 21A-030 from the hose 21A-060.

(d) Remove the clamp 21A-040 and the hose 21A-060 from the tube 21A-070.

(e) Remove the screws 21A-090, the washers 21A-100, the clamps 21A-120 and the tube 21A-070 from the lavatory rear wall.

(f) Remove the clamp 21A-040 and the tube 21A-070 from the hose 21A-080.

(g) Remove the clamp 21A-050 and the hose 21A-080.

(h) Remove the clamps 21A-180 and the hose 21A-190.

(i) Remove the screws 21A-160 and the air extraction bracket 21A-150 from the ceiling panel.

(j) Remove the screws 21A-230, the louver 21A-140, the grille 21A-210 and the fleece 21A-220 from the ceiling panel.

(k) Remove the screws 21A-200 and the air extraction hood 21A-130 from the ceiling panel.

TASK 25-41-51-000-818-C01

D2547160900200 D2547160900400 D2549010400000 D2549010400200 D2549010400400
D2549010400600 D2549010400800 D2549010401000 D2549010401400 D2549010401600
D2549010401800 D2549010402000 D2549010402200 D2549010402400 D2549010402600
D2549010402800 D2549010403000 D2549010403200 D2549010403400 D2549010403600
D2549010403800 D2549010404000 D2549010404200 D2549010404400 D2549010404600
D2549010404800 D2549010405000 D2549010405200 D2549010405400 D2549010405600
D2549010405800 D2549010406000 D2549010406200 D2549010406400 D2549010406800
D2549010407000 D2549010607600 D2549010608600 D2549010608800 D2549010609200
D2549010609400 D2549010609600 D2549010609800 D2549010610000 D2549010610200
D2549010610400 D2549010610600 D2549010610800 D2549010611000 D2549010611200
D2549010611400 D2549010611600 D2549010611800 D2549010612000 D2549010612200
D2549010612400 D2549010612600 D2549010613000 D2549010613200 D2549010613400
D2549010613600 D2549010613800 D2549010614200 D2549010614400 D2549010614600
D2549010614800 D2549020300000 D2549020300400 D2549020300600 D2549020300800
D2549020301000 D2549020301600 D2549020301800 D2549020302000 D2549020302800
D2549020400000 D2549020400200 D2549020400400 D2549020400600 D2549020400800
D2549020401000 D2549020401200 D2549020401400 D2549020401600 D2549020402000
D2549020402200 D2549020402400 D2549020402600 D2549020403000 D2549020403200
D2549020403400 D2549020403600 D2549020403800 D2549020404000 D2549020404200
D2549020404400 D2549020404600 D2549020404800 D2549020405000 D2549020405200
D2549020405400 D2549020405600 D2549020405800 D2549020406000 D2549020406200
D2549020406400 D2549020406600 D2549020406800 D2549020407000 D2549020407200
D2549020407400 D2549020407600 D2549020407800 D2549020408000 D2549020408200
D2549020408600 D2549020408800 D2549020409000 D2549020409200 D2549020409400
D2549020409600 D2549020409800 D2549020410200 D2549020410400 D2549020410600
D2549020410800 D2549020411000 D2549020411200 D2549020411400 D2549020411600
D2549020411800 D2549020412000 D2549020412200 D2549020412400 D2549020412600
D2549020412800 D2549020413000 D2549020413200 D2549020413400 D2549020413600
D2549020413800 D2549020414000 D2549020414200 D2549020414600 D2549020414800
D2549020510600 D2549020510800 D2549020511600 D2549020513400 D2549020513600
D2549020513800 D2549020714000 D2549020800000 D2549020800200 D2549020800400
D2549020800600 D2549020800800 D2549020801000 D2549020801200 D2549020801400
D2549020801800 D2549020802000 D2549020802200 D2549020802400 D2549020802600
D2549020803000 D2549020803200 D2549020803400 D2549020803600 D2549020803800
D2549020804000 D2549020804200 D2549020804400 D2549020804800 D2549020805000
D2549020805200 D2549020805400 D2549020805600 D2549020805800 D2549020806000
D2549020806200 D2549020806400 D2549020806600 D2549020806800 D2549020807000
D2549020807200 D2549020807400 D2549020807600 D2549020807800 D2549020808200
D2549020808400 D2549020808600 D2549020808800 D2549020809000 D2549020809400
D2549020809600 D2549020809800 D2549020810000 D2549020810200 D2549020810400
D2549020810600 D2549020810800 D2549020811200 D2549020811400 D2549020811600
D2549020811800 D2549020812000 D2549020812200 D2549020812400 D2549020812600
D2549020812800 D2549020813000 D2549020813200 D2549020813400 D2549020813600
D2549020813800 D2549020814000 D2549020814200 D2549020814400 D2549020814600
D2549020814800 D2549030400000 D2549030400200 D2549030400400 D2549030400600
D2549030401000 D2549030401200 D2549030401400 D2549030401600 D2549030401800

D2549030402000 D2549030402200 D2549030402400 D2549030402600 D2549030402800
D2549030403000 D2549030403400 D2549030403600 D2549030403800 D2549030404000
D2549030404200 D2549030404400 D2549030404600 D2549030404800 D2549030405000
D2549030405200 D2549030405400 D2549030405600 D2549030405800 D2549030406000
D2549030406400 D2549030406600 D2549030406800 D2549030407000 D2549030407200
D2549030407400 D2549030407600 D2549030407800 D2549030408000 D2549030408200
D2549030408400 D2549030408600 D2549030409000 D2549030409200 D2549030409400
D2549030409600 D2549030409800 D2549030410000 D2549030410200 D2549030410400
D2549030410600 D2549030410800 D2549030411200 D2549030411400 D2549030411600
D2549030411800 D2549030412000 D2549030412200 D2549030412400 D2549030412600
D2549030412800 D2549030413000 D2549030413200 D2549030413400 D2549030413600
D2549030414000 D2549030414200 D2549030414400 D2549030414600 D2549030414800
D2549030603200 D2549030609800 D2549030610000 D2549030610400 D2549030611000
D2549030612000 D2549030612200 D2549030612400 D2549030612600 D2549030613600
D2549030613800 D2549030614000 D2549030614600 D2549030614800 D2549030700000
D2549030700200 D2549030700400 D2549030700600 D2549030700800 D2549030701000
D2549030701200 D2549030701400 D2549030701600 D2549030701800 D2549030702000
D2549030702200 D2549030702400 D2549030702600 D2549030702800 D2549030703000
D2549030703200 D2549030703400 D2549030703600 D2549030703800 D2549030704000
D2549030704200 D2549030704400 D2549030704600 D2549030704800 D2549030705200
D2549030705600 D2549040500200 D2549040500400 D2549040500600 D2549040500800
D2549040501000 D2549040501200 D2549040501400 D2549040501600 D2549040501800
D2549040502000 R225401134-012 R225401134-014 R225401134-030 R225401134-032
R225401134-034 R225401134-036 R225401134-038 R225401136-004 R225401136-006
R225401136-008 R225401136-012 R225401136-014 R225401136-018 R225401136-024
R225401137-016 R225401145-008 R225401145-010 R225401145-014 R225401152-008
R225401152-010 R225401168-008 R225401168-010 R225401168-012 R225401168-024
R225401168-026 R225401172-000 R225401172-018 R225401183-002 R225401183-004
R225401183-006 R225401192-002 R225401196-006 R225401196-008 R225401196-010
R225401196-012 R225401196-014 R225401196-016 R225401196-018 R225401196-020
R225401196-022 R225401196-024 R225401196-038 R225401196-040 R225401196-042
R225401196-044 R225401196-052 R225401196-054 R225401196-056 R225401196-058
R225401196-060 R225401196-062 R225401196-064 R225401196-066 R225401196-068
R225401196-070 R225401199-000 R225401199-004 R225401199-006 R225401199-008
R225401199-010 R225401199-012 R225401600-004 R225401602-000 R225401609-000
R225401611-000 R225401611-006 R225401611-010 R225401611-012 R225401611-014
R225401611-016 R225401611-018 R225401611-020 R225401622-000 R225401622-002
R225401624-000 R225401627-000 R225401627-002 R225401627-004 R225401629-000
R225401629-002 R225401639-000 R225401639-002 R225401643-000 R225401643-002
R225401643-004 R225401643-006 R225401643-008 R225401646-000 R225401646-002
R225401647-000 R225401648-000 R225401648-002 R225401648-004 R225401648-006
R225401648-008 R225401649-000 R225401656-000 R225401656-002 R225401658-000
R225401662-000 R225401662-002 R225401671-000 R225401671-002 R225401673-000
R225401673-002 R225401673-004 R225401673-006 R225401675-000 R225401676-000
R225401683-000 R225401685-000 R225401685-002 R225401688-000 R225401689-004
R225401689-006 R225401691-000 R225401691-002 R225401693-000 R225401697-000

R225401697-002 R225401803-000 R225401803-002 R225401808-000 R225401811-000 R225401814-000

181. Disassembly of the Ventilation System

A. General

A complete disassembly of the component is not necessary and not recommended.

Do not disassemble the component more than it is necessary for:

- Cleaning
- Visual Inspection
- Replacement of defective parts.

B. Job Set-up Information
(1) Consumable Materials

REFERENCE	DESIGNATION
08-010A	Epoxy Resin and Hardener Adhesive
08-026	Adhesive/Sealant one Part, RTV Silicone Rubber

Table 3615
Consumable Materials

C. Procedure

WARNING: **BE CAREFUL WHEN YOU USE SOLVENTS/CLEANING AGENTS, SEALANTS AND OTHER MATERIALS. OBEY THE MATERIAL MANUFACTURER'S INSTRUCTIONS AND THE LOCAL REGULATIONS. MAKE SURE THAT THERE IS A GOOD FLOW OF AIR THROUGH THE WORK AREA. DO NOT BREATHE THE FUMES. DO NOT SMOKE. DO NOT USE THESE MATERIALS NEAR A FLAME, SPARKS OR SOURCES OF HEAT. USE PROTECTIVE CLOTHING, GOGGLES AND GLOVES. IF YOU GET ONE OF THESE MATERIALS ON YOUR SKIN OR IN YOUR EYES, FLUSH IT AWAY WITH A FLOW OF CLEAN WATER. IF YOU GET ONE OF THESE MATERIALS IN YOUR MOUTH, GET IMMEDIATE MEDICAL AID. IN GENERAL, THESE MATERIALS ARE POISONOUS, FLAMMABLE AND SKIN IRRITANTS.**

CAUTION: **DO ALL THE WORK ON A CLEAN, SOFT SURFACE TO PREVENT DAMAGE TO THE COMPONENTS.**

SUB TASK 25-41-51-040-058-A01

1. Disassembly of the Ventilation System (21B-1)

NOTE: **See TABLE 3616 for the references for the replacement procedures of permanent installed parts.**

More data for bonded parts are given in column SEE REPAIR TASK. Use the data for the selection of the related repair solution.

IPL FIG. ITEM	COMPONENT PART NAME	IPL FIG. ITEM	REPLACEMENT PART NAME	SEE REPAIR TASK
21B-001	Ventilation System	21B-170	Air Extraction Tube	Replacement of the Bonded Parts Material No. 08-010A Epoxy Resin and Hardener Adhesive
21B-001	Ventilation System	21B-110	Seal	Replacement of the Bonded Parts Material No. 08-026 Adhesive/Sealant one Part, RTV Silicone Rubber

Table 3616
Reference list for the replacement of permanent installed parts

(a) Remove the part of the individual air outlet 21B-010 from the service cabinet and from the part of the individual air outlet 21B-010.

NOTE: **For further instructions, see CMMV 21-24-19_59579 (individual air outlet).**

NOTE: **For further instructions, see CMMV 21-24-19_83564 (individual air outlet).**

(b) Remove the clamp 21B-020 and the part of the individual air outlet 21B-010 from the cap 21B-030.

(c) Remove the clamp 21B-040 and the cap 21B-030 from the hose 21B-060.

(d) Remove the clamp 21B-040 and the hose 21B-060 from the tube 21B-070.

(e) Remove the screws 21B-090, the washers 21B-100, the clamps 21B-120 and the tube 21B-070 from the lavatory rear wall.

(f) Remove the clamp 21B-040 and the tube 21B-070 from the hose 21B-080.

(g) Remove the clamp 21B-050 and the hose 21B-080.

(h) Remove the clamps 21B-180 and the hose 21B-190.

(i) Remove the screws 21B-160 and the air extraction bracket 21B-150 from the ceiling panel.

(j) Remove the screws 21B-230, the louver 21B-140, the grille 21B-210 and the fleece 21B-220 from the ceiling panel.

(k) Remove the screws 21B-200 and the air extraction hood 21B-130 from the ceiling panel.

TASK 25-41-51-000-819-A01

D2549010500000 D2549010500400 D2549010500600 D2549010500800 D2549010501000 D2549010501200 D2549010501400 D2549010501600 D2549010501800 D2549010502000 D2549010502200 D2549010502400 D2549010502600 D2549010502800 D2549010503200 D2549010503400 D2549010503600 D2549010503800 D2549010504200 D2549010504400 D2549010504600 D2549010504800 D2549010505000 D2549010505200 D2549010505400 D2549010505600 D2549010505800 D2549010506000 D2549010506200 D2549010506400 D2549010506800 D2549010507000 D2549010507200 D2549010507400 D2549010507600 D2549010507800 D2549010508200 D2549010508400 D2549010508600 D2549010508800 D2549010509000 D2549010509200 D2549010511200 D2549020500200 D2549020500400 D2549020500800 D2549020501200 D2549020501600 D2549020501800 D2549020502000 D2549020502400 D2549020502600 D2549020503000 D2549020503400 D2549020503600 D2549020503800 D2549020504000 D2549020504200 D2549020504400 D2549020504600 D2549020505000 D2549020505400 D2549020505800 D2549020600000 D2549020600200 D2549020600400 D2549020600800 D2549020601000 D2549020601200 D2549020601400 D2549020601600 D2549020601800 D2549020602000 D2549020602400 D2549020602600 D2549020602800 D2549020603000 D2549020603200 D2549020603400 D2549020603800 D2549020606400 D2549020606600 D2549020607200 D2549030500200 D2549030500400 D2549030500600 D2549030500800 D2549030501000 D2549030501200 D2549030501400 D2549030501600 D2549030502000 D2549030502200 D2549030502600 D2549030502800 D2549030503000 D2549030503200 D2549030503400 D2549030503600 R225401107-000 R225401107-002 R225401115-002 R225401128-000 R225401133-000 R225401134-000 R225401139-000 R225401145-000 R225401146-000 R225401146-002 R225401188-000 R225401188-002 R225401188-004 R225401188-006

182. Disassembly of the Potable Water System

A. General

A complete disassembly of the component is not necessary and not recommended.

Do not disassemble the component more than it is necessary for:

- Cleaning
- Visual Inspection
- Replacement of defective parts.

B. Job Set-up Information

(1) Not applicable

C. Procedure

WARNING: **BE CAREFUL WHEN YOU USE SOLVENTS/CLEANING AGENTS, SEALANTS AND OTHER MATERIALS. OBEY THE MATERIAL MANUFACTURER'S INSTRUCTIONS AND THE LOCAL REGULATIONS. MAKE SURE THAT THERE IS A GOOD FLOW OF AIR THROUGH THE WORK AREA. DO NOT BREATHE THE FUMES. DO NOT SMOKE. DO NOT USE THESE MATERIALS NEAR A FLAME, SPARKS OR SOURCES OF HEAT. USE PROTECTIVE CLOTHING, GOGGLES AND GLOVES. IF YOU GET ONE OF THESE MATERIALS ON YOUR SKIN OR IN YOUR EYES, FLUSH IT AWAY WITH A FLOW OF CLEAN WATER. IF YOU GET ONE OF THESE MATERIALS IN YOUR MOUTH, GET IMMEDIATE MEDICAL AID. IN GENERAL, THESE MATERIALS ARE POISONOUS, FLAMMABLE AND SKIN IRRITANTS.**

CAUTION: **DO ALL THE WORK ON A CLEAN, SOFT SURFACE TO PREVENT DAMAGE TO THE COMPONENTS.**

SUB TASK 25-41-51-040-060-A01

D2549020504000 D2549020602800 D2549020603400 D2549030500800
D2549030502000 D2549030502800 R225401134-000 R225401188-004

1. Disassembly of the Potable Water System (22-1)

NOTE: **See TABLE 3617 for the references for the replacement procedures of permanent installed parts.**

More data for bonded parts are given in column SEE REPAIR TASK. Use the data for the selection of the related repair solution.

IPL FIG. ITEM	COMPONENT PART NAME	IPL FIG. ITEM	REPLACEMENT PART NAME	SEE REPAIR TASK
22-001	Potable Water System	22-220	Insulation	Replacement of the Bonded Parts self adhesive
22-001	Potable Water System	22-230	Insulation	Replacement of the Bonded Parts self adhesive

Table 3617
Reference list for the replacement of permanent installed parts

(a) Disconnect the water faucet 22-010 from the water supply.

NOTE: **For further instructions, see CMMV 38-11-02_C3207 (water faucet).**

(b) Remove the ground cable from the water faucet 22-010.

(c) Remove the washers 22-020, the nuts 22-030 and the water faucet 22-010.

(d) Remove the washers 22-050, the nuts 22-060, the tube 22-090, the hose 22-100 and the water faucet 22-010 from the water faucet angles 22-040, 22-045.

(e) Remove the screws 22-070, the washers 22-080 and the water faucet angles 22-040, 22-045 from the lavatory structure.

(f) Remove the hose 22-170 from the tee 22-160.

(g) Remove the tube 22-150 from the tees 22-140, 22-160.

(h) Remove the tube 22-090 from the tee 22-140.

(i) Remove the tee 22-140 from the water heater 22-110.

NOTE: For further instructions, see CMMV 38-12-18_0AJJ0 (water heater).

NOTE: For further instructions, see CMMV 38-12-16_0AJJ0 (water heater).

(j) Remove the hose 22-100 from the water heater 22-110.

(k) Remove the ground cable from the water heater 22-110.

(l) Remove the clamps 22-130 with the water heater 22-110 from the brackets 22-120.

(m) Remove the screws 22-070, the washers 22-080 and the brackets 22-120 from the lavatory structure.

(n) Remove the screw 22-260, the washer 22-085, the spacer 22-240 and the tube 22-210 with the clamp 22-250.

(o) Remove the tube 22-210 from the shutoff valve 22-180.

(p) Remove the tee 22-160 from the shutoff valve 22-180.

(q) Remove the ground cable from the shutoff valve 22-180.

(r) Remove the screws 22-191, 22-193, the washers 22-192, the nuts 22-190, 22-194 and the shutoff valve 22-180 from the bracket 22-200.

(s) Remove the screws 22-071, the washers 22-080 and the bracket 22-200 from the spacer 22-270.

SUB TASK 25-41-51-040-060-B01
D2549020601400 D2549020601600 R225401133-000

2. Disassembly of the Potable Water System (22-1)

NOTE: See TABLE 3618 for the references for the replacement procedures of permanent installed parts.

More data for bonded parts are given in column SEE REPAIR TASK. Use the data for the selection of the related repair solution.

IPL FIG. ITEM	COMPONENT PART NAME	IPL FIG. ITEM	REPLACEMENT PART NAME	SEE REPAIR TASK
22-001	Potable Water System	22-220	Insulation	Replacement of the Bonded Parts self adhesive
22-001	Potable Water System	22-230	Insulation	Replacement of the Bonded Parts self adhesive

Table 3618
Reference list for the replacement of permanent installed parts

(a) Disconnect the water faucet 22-010 from the water supply.

NOTE: For further instructions, see CMMV 38-11-02_C3207 (water faucet).

(b) Remove the ground cable from the water faucet 22-010.

(c) Remove the washers 22-020, the nuts 22-030 and the water faucet 22-010.

(d) Remove the washers 22-050, the nuts 22-060, the tube 22-090, the hose 22-100 and the water faucet 22-010 from the water faucet angles 22-040, 22-045.

(e) Remove the screws 22-070, the washers 22-080 and the water faucet angles 22-040, 22-045 from the lavatory structure.

(f) Remove the hose 22-170 from the tee 22-160.

(g) Remove the tube 22-150 from the tees 22-140, 22-160.

(h) Remove the tube 22-090 from the tee 22-140.

(i) Remove the tee 22-140 from the water heater 22-110.

NOTE: For further instructions, see CMMV 38-12-18_0AJJ0 (water heater).

NOTE: For further instructions, see CMMV 38-12-16_0AJJ0 (water heater).

(j) Remove the hose 22-100 from the water heater 22-110.

(k) Remove the ground cable from the water heater 22-110.

(l) Remove the clamps 22-130 with the water heater 22-110 from the brackets 22-120.

(m) Remove the screws 22-070, the washers 22-080 and the brackets 22-120 from the lavatory structure.

(n) Remove the screw 22-260, the washer 22-085, the spacers 22-240, 22-242 and the tube 22-210 with the clamp 22-250.

(o) Remove the tube 22-210 from the shutoff valve 22-180.

(p) Remove the tee 22-160 from the shutoff valve 22-180.

(q) Remove the ground cable from the shutoff valve 22-180.

(r) Remove the screws 22-191, 22-193, the washers 22-192, the nuts 22-190, 22-194 and the shutoff valve 22-180 from the bracket 22-200.

(s) Remove the screws 22-071, the washers 22-080 and the bracket 22-200 from the floor pan.

SUB TASK 25-41-51-040-060-C01

D2549010500000 D2549010500400 D2549010500600 D2549010500800
D2549010501000 D2549010501200 D2549010501400 D2549010501600
D2549010501800 D2549010502000 D2549010502200 D2549010502400
D2549010502600 D2549010502800 D2549010503200 D2549010503400
D2549010503600 D2549010503800 D2549010504200 D2549010504400
D2549010504600 D2549010504800 D2549010505000 D2549010505200
D2549010505400 D2549010505600 D2549010505800 D2549010506000
D2549010506200 D2549010506400 D2549010506800 D2549010507000
D2549010507200 D2549010507400 D2549010507600 D2549010507800
D2549010508200 D2549010508400 D2549010508600 D2549010508800
D2549010509000 D2549010509200 D2549010511200 D2549020500200

D2549020500400 D2549020500800 D2549020501200 D2549020501600 D2549020501800 D2549020502000 D2549020502400 D2549020502600 D2549020503000 D2549020503400 D2549020503600 D2549020503800 D2549020504200 D2549020504400 D2549020504600 D2549020505000 D2549020505400 D2549020505800 D2549020600000 D2549020600200 D2549020600400 D2549020600800 D2549020601000 D2549020601200 D2549020601800 D2549020602000 D2549020602400 D2549020602600 D2549020603000 D2549020603200 D2549020603800 D2549020606400 D2549020606600 D2549020607200 D2549030500200 D2549030500400 D2549030500600 D2549030501000 D2549030501200 D2549030501400 D2549030501600 D2549030502200 D2549030502600 D2549030503000 D2549030503200 D2549030503400 D2549030503600 R225401107-000 R225401107-002 R225401115-002 R225401128-000 R225401139-000 R225401145-000 R225401146-000 R225401146-002 R225401188-000 R225401188-002 R225401188-006

3. Disassembly of the Potable Water System (22-1)

   (a) Disconnect the water faucet 22-010 from the water supply.

   NOTE: For further instructions, see CMMV 38-11-02_C3207 (water faucet).

   (b) Remove the ground cable from the water faucet 22-010.

   (c) Remove the washers 22-020, the nuts 22-030 and the water faucet 22-010.

   (d) Remove the screws 22-087, 22-088, the washers 22-089 the spacers 22-092 and the clamps 22-086.

   (e) Remove the washers 22-050, the nuts 22-060, the tube 22-090, the hose 22-100 and the water faucet 22-010 from the water faucet angles 22-040, 22-045.

   (f) Remove the screws 22-070, the washers 22-080 and the water faucet angles 22-040, 22-045 from the lavatory structure.

   (g) Remove the hose 22-170 from the tee 22-160.

   (h) Remove the tube 22-150 from the tees 22-140, 22-160.

   (i) Remove the elbow 22-090 from the tee 22-140.

   (j) Remove the tube 22-105 from the water heater 22-010.

(k) Remove the tee 22-140 from the water heater 22-110.

NOTE: For further instructions, see CMMV 38-12-18_0AJJ0 (water heater).

NOTE: For further instructions, see CMMV 38-12-16_0AJJ0 (water heater).

(l) Remove the hose 22-100 from the water heater 22-110.

(m) Remove the ground cable from the water heater 22-110.

(n) Remove the clamps 22-130 with the water heater 22-110 from the brackets 22-120.

(o) Remove the screws 22-070, the washers 22-080 and the brackets 22-120 from the lavatory structure.

(p) Remove the tube 22-210 from the shutoff valve 22-180.

(q) Remove the tee 22-160 from the shutoff valve 22-180.

(r) Remove the ground cable from the shutoff valve 22-180.

(s) Remove the screws 22-191, 22-193, the washers 22-192, the nuts 22-190, 22-194 and the shutoff valve 22-180 from the bracket 22-200.

(t) Remove the screws 22-071, the washers 22-080 and the bracket 22-200 from the floor pan.

TASK 25-41-51-000-819-B01
D2549020500000 D2549020500600 D2549020501000 D2549020501400 D2549020502800 D2549020503200 D2549020504800 D2549020505200 D2549020506000 D2549030501800 D2549030502400

183. Disassembly of the Potable Water System

A. General

A complete disassembly of the component is not necessary and not recommended.

Do not disassemble the component more than it is necessary for:

- Cleaning
- Visual Inspection
- Replacement of defective parts.

B. Job Set-up Information

(1) Not applicable

C. Procedure

WARNING: BE CAREFUL WHEN YOU USE SOLVENTS/CLEANING AGENTS, SEALANTS AND OTHER MATERIALS. OBEY THE MATERIAL MANUFACTURER'S INSTRUCTIONS AND THE LOCAL REGULATIONS. MAKE SURE THAT THERE IS A GOOD FLOW OF AIR THROUGH THE WORK AREA. DO NOT BREATHE THE FUMES. DO NOT SMOKE. DO NOT USE THESE MATERIALS NEAR A FLAME, SPARKS OR SOURCES OF HEAT. USE PROTECTIVE CLOTHING, GOGGLES AND GLOVES. IF YOU GET ONE OF THESE MATERIALS ON YOUR SKIN OR IN YOUR EYES, FLUSH IT AWAY WITH A FLOW OF CLEAN WATER. IF YOU GET ONE OF THESE MATERIALS IN YOUR MOUTH, GET IMMEDIATE MEDICAL AID. IN GENERAL, THESE MATERIALS ARE POISONOUS, FLAMMABLE AND SKIN IRRITANTS.

CAUTION: DO ALL THE WORK ON A CLEAN, SOFT SURFACE TO PREVENT DAMAGE TO THE COMPONENTS.

SUB TASK 25-41-51-040-061-A01
1. Disassembly of the Potable Water System (22A-1)

(a) Disconnect the water faucet 22A-010 from the water supply.

NOTE: For further instructions, see CMMV 38-11-02_C3207 (water faucet).

(b) Remove the ground cable from the water faucet 22A-010.

(c) Remove the washers 22A-020, the nuts 22A-030 and the water faucet 22A-010.

(d) Remove the washers 22A-050, the nuts 22A-060, the tube 22A-090, the hose 22A-100 and the water faucet 22A-010 from the water faucet angles 22A-040.

(e) Remove the screws 22A-070, the washers 22A-080 and the water faucet angles 22A-040 from the lavatory structure.

(f) Remove the hose 22A-150 from the tee 22A-310.

(g) Remove the tube 22A-140 from the shutoff valve 22A-160.

(h) Remove the tube 22A-210 from the tees 22A-250, 22A-310.

(i) Remove the ground cable from the nonreturn valve 22A-270.

(j) Remove the screw 22A-280, the washer 22A-080, the spacer 22A-290 and the tube 22A-240 with the clamp 22A-300 from the tee 22A-250 and from the nonreturn valve 22A-270.

NOTE: For further instructions, see CMMV 38-10-15_U9084 (nonreturn valve).

(k) Remove the tee 22A-250 from the tube 22A-200.

(l) Remove the tube 22A-090 from the tee 22A-260.

(m) Remove the hose 22A-100 from the water heater 22A-110.

NOTE: For further instructions, see CMMV 38-12-16_0AJJ0 (water heater).

(n) Remove the tube 22A-230 from the tee 22A-260.

(o) Remove the nonreturn valve 22A-270 from the tee 22A-260.

(p) Remove the tee 22A-260 from the tube 22A-220.

(q) Remove the tee 22A-260 from the water heater 22A-110.

(r) Remove the tubes 22A-200, 22A-220 from the drinking water filter assembly 22A-190.

NOTE: For further instructions, see CMMV 38-12-23_61372 (drinking water filter assembly).

(s) Remove the ground cable from the drinking water filter assembly 22A-190.

(t) Remove the screws 22A-070, the washers 22A-080 and the drinking water filter assembly 22A-190 from the lavatory structure.

(u) Remove the ground cable from the water heater 22A-110.

(v) Remove the clamps 22A-130 with the water heater 22A-110 from the brackets 22A-120.

(w) Remove the screws 22A-070, the washers 22A-080 and the brackets 22A-120 from the lavatory structure.

(x) Remove the tee 22A-310 from the shutoff valve 22A-160.

(y) Remove the ground cable from the shutoff valve 22A-160.

(z) Remove the screws 22A-184, 22A-186, the washers 22A-185, the nuts 22A-170, 22A-187 and the shutoff valve 22A-160 from the bracket 22A-180.

(aa) Remove the screws 22A-070, the washers 22A-080 and the bracket 22A-180 from the floor pan.

TASK 25-41-51-000-819-C01
D2549020603600 D2549020604000

184. Disassembly of the Potable Water System

A. General

A complete disassembly of the component is not necessary and not recommended.

Do not disassemble the component more than it is necessary for:

- Cleaning
- Visual Inspection
- Replacement of defective parts.

B. Job Set-up Information

(1) Not applicable

C. Procedure

WARNING: BE CAREFUL WHEN YOU USE SOLVENTS/CLEANING AGENTS, SEALANTS AND OTHER MATERIALS. OBEY THE MATERIAL MANUFACTURER'S INSTRUCTIONS AND THE LOCAL REGULATIONS. MAKE SURE THAT THERE IS A GOOD FLOW OF AIR THROUGH THE WORK AREA. DO NOT BREATHE THE FUMES. DO NOT SMOKE. DO NOT USE THESE MATERIALS NEAR A FLAME, SPARKS OR SOURCES OF HEAT. USE PROTECTIVE CLOTHING, GOGGLES AND GLOVES. IF YOU GET ONE OF THESE MATERIALS ON YOUR SKIN OR IN YOUR EYES, FLUSH IT AWAY WITH A FLOW OF CLEAN WATER. IF YOU GET ONE OF THESE MATERIALS IN YOUR MOUTH, GET IMMEDIATE MEDICAL AID. IN GENERAL, THESE MATERIALS ARE POISONOUS, FLAMMABLE AND SKIN IRRITANTS.

CAUTION: DO ALL THE WORK ON A CLEAN, SOFT SURFACE TO PREVENT DAMAGE TO THE COMPONENTS.

SUB TASK 25-41-51-040-062-A01

1. Disassembly of the Potable Water System (22B-1)

(a) Disconnect the water faucet 22B-010 from the water supply.

NOTE: For further instructions, see CMMV 38-11-02_C3207 (water faucet).

(b) Remove the ground cable from the water faucet 22B-010.

(c) Remove the washers 22B-020, the nuts 22B-030 and the water faucet 22B-010.

(d) Remove the washers 22B-050, the nuts 22B-060, the tube 22B-100, the hose 22B-110 and the water faucet 22B-010 from the water faucet angles 22B-040.

(e) Remove the screws 22B-070, the washers 22B-090 and the water faucet angles 22B-040 from the lavatory structure.

(f) Remove the hose 22B-180 from the tee 22B-170.

(g) Remove the tube 22B-160 from the tees 22B-150, 22B-170.

(h) Remove the tube 22B-100 from the tee 22B-150.

(i) Remove the tee 22B-150 from the water heater 22B-120.

NOTE: For further instructions, see CMMV 38-12-16_0AJJ0 (water heater).

(j) Remove the hose 22B-110 from the water heater 22B-120.

(k) Remove the ground cable from the water heater 22B-120.

(l) Remove the clamps 22B-140 with the water heater 22B-120 from the brackets 22B-130.

(m) Remove the screws 22B-070, the washers 22B-090 and the brackets 22B-130 from the lavatory structure.

(n) Remove the tube 22B-260 from the shutoff valve 22B-190.

(o) Remove the tee 22B-170 from the shutoff valve 22B-190.

(p) Remove the ground cable from the shutoff valve 22B-190.

(q) Remove the screws 22B-210, 22B-230, the washers 22B-220, the nuts 22B-200, 22B-240 and the shutoff valve 22B-190 from the bracket 22B-250.

(r) Remove the screws 22B-080, the washers 22B-090 and the bracket 22B-250 from the floor pan.

TASK 25-41-51-000-819-D01
D2549010508000

185. Disassembly of the Potable Water System

A. General

A complete disassembly of the component is not necessary and not recommended.

Do not disassemble the component more than it is necessary for:

- Cleaning
- Visual Inspection
- Replacement of defective parts.

B. Job Set-up Information

(1) Not applicable

C. Procedure

WARNING: BE CAREFUL WHEN YOU USE SOLVENTS/CLEANING AGENTS, SEALANTS AND OTHER MATERIALS. OBEY THE MATERIAL MANUFACTURER'S INSTRUCTIONS AND THE LOCAL REGULATIONS. MAKE SURE THAT THERE IS A GOOD FLOW OF AIR THROUGH THE WORK AREA. DO NOT BREATHE THE FUMES. DO NOT SMOKE. DO NOT USE THESE MATERIALS NEAR A FLAME, SPARKS OR SOURCES OF HEAT. USE PROTECTIVE CLOTHING, GOGGLES AND GLOVES. IF YOU GET ONE OF THESE MATERIALS ON YOUR SKIN OR IN YOUR EYES, FLUSH IT AWAY WITH A FLOW OF CLEAN WATER. IF YOU GET ONE OF THESE MATERIALS IN YOUR MOUTH, GET IMMEDIATE MEDICAL AID. IN GENERAL, THESE MATERIALS ARE POISONOUS, FLAMMABLE AND SKIN IRRITANTS.

CAUTION: DO ALL THE WORK ON A CLEAN, SOFT SURFACE TO PREVENT DAMAGE TO THE COMPONENTS.

SUB TASK 25-41-51-040-063-A01
1. Disassembly of the Potable Water System (22C-1)

(a) Disconnect the infrared faucet assembly 22C-010 from the water supply and from the electrical supply.

NOTE: For further instructions, see CMMV 38-20-20_80477 (infrared faucet assembly).

(b) Remove the ground cable from the infrared faucet assembly 22C-010.

(c) Remove the washers 22C-020, the nuts 22C-030 and the infrared faucet assembly 22C-010.

(d) Remove the screws 22C-120, the washers 22C-130, the spacers 22C-110 and the hose 22C-060 with the clamps 22C-100.

(e) Remove the hose 22C-060 from the tee 22C-070.

(f) Remove the hose 22C-040 from the water heater 22C-050.

NOTE: For further instructions, see CMMV 38-12-16_0AJJ0 (water heater).

(g) Remove the hose 22C-090 from the tee 22C-170.

(h) Remove the tube 22C-080 from the tees 22C-070, 22C-170.

(i) Remove the tee 22C-070 from the water heater 22C-050.

(j) Remove the tee 22C-170 from the shutoff valve 22C-180.

(k) Remove the tube 22C-270 from the shutoff valve 22C-180.

(l) Remove the ground cable from the water heater 22C-050.

(m) Remove the clamps 22C-160 with the water heater 22C-050 from the brackets 22C-140.

(n) Remove the screws 22C-150, the washers 22C-130 and the brackets 22C-140 from the lavatory structure.

(o) Remove the ground cable from the shutoff valve 22C-180.

(p) Remove the screws 22C-200, 22C-230, the washers 22C-210, 22C-240, the nuts 22C-220, 22C-260 and the shutoff valve 22C-180 from the shutoff cock bracket 22C-190.

(q) Remove the screws 22C-250, the washers 22C-130 and the shutoff cock bracket 22C-190 from the floor pan.

TASK 25-41-51-000-819-E01

D2547160900200 D2547160900400 D2549010400000 D2549010400200 D2549010400400
D2549010400600 D2549010400800 D2549010401000 D2549010401400 D2549010401800
D2549010402000 D2549010402200 D2549010402400 D2549010402600 D2549010402800
D2549010403000 D2549010403400 D2549010403600 D2549010403800 D2549010404200
D2549010404400 D2549010405000 D2549010405200 D2549010405600 D2549010405800
D2549010406000 D2549010406200 D2549010406400 D2549010406800 D2549010407000
D2549010509400 D2549010509600 D2549010509800 D2549010510000 D2549010510200
D2549010510600 D2549010510800 D2549010511000 D2549010511400 D2549010511600
D2549010511800 D2549010512000 D2549010512200 D2549010512400 D2549010512600
D2549010513000 D2549010513200 D2549010513400 D2549010513800 D2549010514200
D2549010514400 D2549010514600 D2549010514800 D2549010600000 D2549010600200
D2549010600400 D2549010600600 D2549010600800 D2549010601000 D2549010601600
D2549010601800 D2549010602000 D2549010602200 D2549010602400 D2549010602600
D2549010602800 D2549010603000 D2549010603400 D2549010603600 D2549010603800
D2549010604000 D2549010604200 D2549010604400 D2549010604600 D2549010605000
D2549010605200 D2549010605600 D2549010605800 D2549010606000 D2549010606200
D2549010606600 D2549010607200 D2549010607600 D2549010608200 D2549010608400
D2549010608800 D2549010609200 D2549010609600 D2549010609800 D2549010610000
D2549010610400 D2549010610800 D2549010611000 D2549010611200 D2549010611800
D2549010612400 D2549010612600 D2549010613000 D2549010613200 D2549010613400
D2549010613800 D2549010614200 D2549010614600 D2549020300000 D2549020300400
D2549020300600 D2549020300800 D2549020301000 D2549020301600 D2549020301800
D2549020302000 D2549020302800 D2549020400000 D2549020400200 D2549020400400
D2549020400600 D2549020400800 D2549020401000 D2549020401200 D2549020401400
D2549020401600 D2549020402000 D2549020402600 D2549020403200 D2549020403400
D2549020403600 D2549020403800 D2549020404000 D2549020404400 D2549020404600
D2549020404800 D2549020405000 D2549020405200 D2549020405400 D2549020405600
D2549020406200 D2549020406400 D2549020406600 D2549020406800 D2549020407000
D2549020407400 D2549020407600 D2549020407800 D2549020408000 D2549020408200
D2549020408600 D2549020409000 D2549020409200 D2549020409400 D2549020409600
D2549020409800 D2549020410200 D2549020410400 D2549020410600 D2549020410800
D2549020411000 D2549020411200 D2549020411400 D2549020411600 D2549020411800
D2549020412000 D2549020412200 D2549020412400 D2549020412600 D2549020413000
D2549020413200 D2549020413400 D2549020413600 D2549020413800 D2549020414000
D2549020414200 D2549020414600 D2549020414800 D2549020502200 D2549020505600
D2549020506600 D2549020506800 D2549020507400 D2549020507600 D2549020507800
D2549020508000 D2549020508200 D2549020508400 D2549020508600 D2549020508800
D2549020509000 D2549020509200 D2549020509600 D2549020509800 D2549020510000
D2549020510600 D2549020510800 D2549020511000 D2549020511200 D2549020511600
D2549020511800 D2549020512000 D2549020512200 D2549020512400 D2549020512600
D2549020513000 D2549020513200 D2549020513400 D2549020513600 D2549020513800
D2549020514000 D2549020514200 D2549020514400 D2549020514600 D2549020514800
D2549020602200 D2549020604200 D2549020604400 D2549020604600 D2549020604800
D2549020605000 D2549020605200 D2549020605400 D2549020605800 D2549020606000
D2549020606800 D2549020607000 D2549020607400 D2549020607600 D2549020607800
D2549020608400 D2549020608600 D2549020608800 D2549020609000 D2549020609400

D2549020609600 D2549020609800 D2549020610000 D2549020610200 D2549020610400
D2549020610600 D2549020610800 D2549020611000 D2549020611200 D2549020611400
D2549020611600 D2549020611800 D2549020612200 D2549020612400 D2549020612600
D2549020612800 D2549020613000 D2549020613200 D2549020613800 D2549020614000
D2549020614400 D2549020614600 D2549020614800 D2549020700000 D2549020700200
D2549020700400 D2549020700600 D2549020700800 D2549020701400 D2549020701600
D2549020701800 D2549020702000 D2549020702200 D2549020702400 D2549020702600
D2549020702800 D2549020703200 D2549020703400 D2549020703600 D2549020703800
D2549020704000 D2549020704200 D2549020704400 D2549020704800 D2549020705000
D2549020705200 D2549020705400 D2549020705600 D2549020705800 D2549020706000
D2549020706200 D2549020706400 D2549020706600 D2549020706800 D2549020707000
D2549020707200 D2549020707400 D2549020707800 D2549020708000 D2549020708200
D2549020708400 D2549020708600 D2549020708800 D2549020709000 D2549020709200
D2549020709400 D2549020709600 D2549020709800 D2549020710000 D2549020710200
D2549020710400 D2549020710600 D2549020710800 D2549020711000 D2549020711200
D2549020711400 D2549020711600 D2549020712200 D2549020712400 D2549020712800
D2549020713000 D2549020713200 D2549020713400 D2549020713600 D2549020714000
D2549020714400 D2549020714600 D2549020800000 D2549020800200 D2549020800400
D2549020800600 D2549020800800 D2549020801200 D2549020801400 D2549020801600
D2549020801800 D2549020802000 D2549020802400 D2549020802600 D2549020803000
D2549020803200 D2549020803400 D2549020803600 D2549020803800 D2549020804400
D2549020804800 D2549020805000 D2549020805200 D2549020805600 D2549020805800
D2549020806000 D2549020806200 D2549020806400 D2549020806600 D2549020806800
D2549020807000 D2549020807200 D2549020807400 D2549020807600 D2549020807800
D2549020808200 D2549020808400 D2549020808600 D2549020808800 D2549020809000
D2549020809400 D2549020809600 D2549020809800 D2549020810000 D2549020810200
D2549020810400 D2549020810600 D2549020810800 D2549020811200 D2549020811400
D2549020811600 D2549020811800 D2549020812000 D2549020812200 D2549020812400
D2549020812600 D2549020812800 D2549020813000 D2549020813200 D2549020813400
D2549020813600 D2549020813800 D2549020814200 D2549020814400 D2549020814600
D2549020814800 D2549030400000 D2549030400200 D2549030401000 D2549030401400
D2549030401600 D2549030401800 D2549030402200 D2549030403000 D2549030403800
D2549030404800 D2549030405400 D2549030405600 D2549030405800 D2549030406000
D2549030406400 D2549030406600 D2549030407000 D2549030407200 D2549030407400
D2549030407600 D2549030408000 D2549030408200 D2549030408400 D2549030408600
D2549030409200 D2549030409400 D2549030409600 D2549030410200 D2549030410400
D2549030410600 D2549030410800 D2549030411200 D2549030411400 D2549030411800
D2549030412200 D2549030412400 D2549030412600 D2549030412800 D2549030413000
D2549030413200 D2549030413600 D2549030414000 D2549030414200 D2549030414400
D2549030414600 D2549030503800 D2549030504200 D2549030504600 D2549030504800
D2549030505200 D2549030505600 D2549030505800 D2549030506200 D2549030506400
D2549030506800 D2549030507000 D2549030507200 D2549030507400 D2549030507600
D2549030507800 D2549030508200 D2549030508600 D2549030508800 D2549030509000
D2549030509200 D2549030509600 D2549030509800 D2549030510200 D2549030510400
D2549030510800 D2549030511200 D2549030511600 D2549030511800 D2549030512200
D2549030512400 D2549030512800 D2549030513000 D2549030513400 D2549030513600
D2549030514000 D2549030514200 D2549030514400 D2549030600000 D2549030600400

D2549030600600 D2549030600800 D2549030601000 D2549030601200 D2549030601600
D2549030602000 D2549030602400 D2549030602600 D2549030603000 D2549030603200
D2549030603400 D2549030603600 D2549030604200 D2549030604600 D2549030605000
D2549030605200 D2549030605400 D2549030605800 D2549030606000 D2549030606200
D2549030606400 D2549030606600 D2549030607000 D2549030607200 D2549030607600
D2549030607800 D2549030608400 D2549030608600 D2549030609200 D2549030610000
D2549030610400 D2549030610600 D2549030611000 D2549030611400 D2549030611600
D2549030611800 D2549030612000 D2549030612200 D2549030612600 D2549030612800
D2549030613400 D2549030613800 D2549030614000 D2549030614200 D2549030614400
D2549030614600 D2549030614800 D2549030700000 D2549030700200 D2549030700400
D2549030700800 D2549030701000 D2549030701400 D2549030701600 D2549030701800
D2549030702200 D2549030702600 D2549030703000 D2549030703200 D2549030703400
D2549030703600 D2549030703800 D2549030704000 D2549030704200 D2549030704600
D2549030704800 D2549030705200 D2549030705600 D2549040500200 D2549040500400
D2549040500600 D2549040500800 D2549040501000 D2549040501200 D2549040501400
D2549040501600 D2549040501800 D2549040502000 R225401107-004 R225401115-000
R225401134-008 R225401134-016 R225401134-018 R225401134-024 R225401134-026
R225401134-028 R225401136-000 R225401136-004 R225401136-006 R225401136-008
R225401136-010 R225401136-012 R225401136-014 R225401136-016 R225401136-018
R225401136-020 R225401136-022 R225401136-024 R225401137-000 R225401137-002
R225401137-004 R225401137-006 R225401137-008 R225401137-010 R225401137-012
R225401137-014 R225401137-016 R225401142-000 R225401142-002 R225401145-002
R225401145-004 R225401145-006 R225401145-008 R225401145-010 R225401145-012
R225401145-014 R225401152-000 R225401152-002 R225401152-004 R225401152-006
R225401152-008 R225401152-010 R225401153-000 R225401159-000 R225401168-000
R225401168-002 R225401168-004 R225401168-006 R225401168-008 R225401168-010
R225401168-012 R225401168-014 R225401168-016 R225401168-018 R225401168-020
R225401168-022 R225401168-024 R225401168-026 R225401168-028 R225401172-000
R225401172-002 R225401172-004 R225401172-006 R225401172-008 R225401172-010
R225401172-012 R225401172-014 R225401172-016 R225401172-018 R225401175-000
R225401175-002 R225401176-000 R225401192-000 R225401192-002 R225401195-000
R225401196-000 R225401196-002 R225401196-004 R225401196-006 R225401196-008
R225401196-010 R225401196-012 R225401196-014 R225401196-016 R225401196-018
R225401196-020 R225401196-022 R225401196-024 R225401196-034 R225401196-036
R225401196-038 R225401196-040 R225401196-042 R225401196-044 R225401196-046
R225401196-048 R225401196-050 R225401196-052 R225401196-054 R225401196-056
R225401196-058 R225401196-060 R225401196-062 R225401196-064 R225401196-066
R225401196-068 R225401196-070 R225401199-000 R225401199-002 R225401199-004
R225401199-006 R225401199-008 R225401199-010 R225401199-012 R225401600-000
R225401600-002 R225401600-004 R225401602-000 R225401605-000 R225401605-002
R225401609-000 R225401611-000 R225401611-006 R225401611-008 R225401611-010
R225401611-012 R225401611-014 R225401611-016 R225401611-018 R225401611-020
R225401613-000 R225401619-000 R225401619-002 R225401622-000 R225401622-002
R225401624-000 R225401625-000 R225401627-000 R225401627-002 R225401627-004
R225401629-000 R225401629-002 R225401639-000 R225401639-002 R225401643-000
R225401643-002 R225401643-004 R225401643-006 R225401643-008 R225401646-000
R225401646-002 R225401647-000 R225401648-000 R225401648-002 R225401648-004

R225401648-006 R225401648-008 R225401649-000 R225401656-000 R225401656-002
R225401658-000 R225401662-000 R225401662-002 R225401671-000 R225401671-002
R225401673-000 R225401673-002 R225401673-004 R225401673-006 R225401675-000
R225401676-000 R225401683-000 R225401688-000 R225401689-004 R225401689-006
R225401691-000 R225401693-000 R225401697-000 R225401697-002 R225401803-000
R225401803-002 R225401808-000 R225401814-000

186. Disassembly of the Potable Water System

A. General

A complete disassembly of the component is not necessary and not recommended.

Do not disassemble the component more than it is necessary for:

- Cleaning
- Visual Inspection
- Replacement of defective parts.

B. Job Set-up Information

(1) Not applicable

C. Procedure

WARNING: **BE CAREFUL WHEN YOU USE SOLVENTS/CLEANING AGENTS, SEALANTS AND OTHER MATERIALS. OBEY THE MATERIAL MANUFACTURER'S INSTRUCTIONS AND THE LOCAL REGULATIONS. MAKE SURE THAT THERE IS A GOOD FLOW OF AIR THROUGH THE WORK AREA. DO NOT BREATHE THE FUMES. DO NOT SMOKE. DO NOT USE THESE MATERIALS NEAR A FLAME, SPARKS OR SOURCES OF HEAT. USE PROTECTIVE CLOTHING, GOGGLES AND GLOVES. IF YOU GET ONE OF THESE MATERIALS ON YOUR SKIN OR IN YOUR EYES, FLUSH IT AWAY WITH A FLOW OF CLEAN WATER. IF YOU GET ONE OF THESE MATERIALS IN YOUR MOUTH, GET IMMEDIATE MEDICAL AID. IN GENERAL, THESE MATERIALS ARE POISONOUS, FLAMMABLE AND SKIN IRRITANTS.**

CAUTION: **DO ALL THE WORK ON A CLEAN, SOFT SURFACE TO PREVENT DAMAGE TO THE COMPONENTS.**

SUB TASK 25-41-51-040-064-A01
D2549010509400 D2549010509600 D2549010509800 D2549010510000
D2549010510200 D2549010510600 D2549010510800 D2549010511000
D2549010511400 D2549010511600 D2549010511800 D2549010512000

D2549010512200 D2549010512400 D2549010512600 D2549010513000
D2549010513200 D2549010513400 D2549010513800 D2549010514200
D2549010514400 D2549010514600 D2549010514800 D2549010600000
D2549010600200 D2549010600400 D2549010600600 D2549010600800
D2549010601000 D2549010601600 D2549010601800 D2549010602000
D2549010602200 D2549010602400 D2549010602600 D2549010602800
D2549010603000 D2549010603400 D2549010603600 D2549010603800
D2549010604000 D2549010604200 D2549010604400 D2549010604600
D2549010605600 D2549020506600 D2549020506800 D2549020602200
D2549020604200 D2549020604400 D2549020604600 D2549020604800
D2549020605000 D2549020605200 D2549020605400 D2549020605800
D2549020606000 D2549020606800 D2549020607000 D2549020607400
D2549020607600 D2549020607800 D2549020608400 D2549020608600
D2549020608800 D2549020609000 D2549020609400 D2549020609600
D2549020609800 D2549020610000 D2549020610200 D2549020610400
D2549020610600 D2549020610800 D2549020611000 D2549020611200
D2549020611400 D2549020611600 D2549020611800 D2549020612200
D2549020612400 D2549020612600 D2549020612800 D2549020613000
D2549020613200 D2549020613800 D2549020614000 D2549020614400
D2549020614600 D2549020614800 D2549020700000 D2549020700200
D2549020700400 D2549020700600 D2549020700800 D2549020701400
D2549020701600 D2549020701800 D2549020702000 D2549020702200
D2549020702400 D2549020702600 D2549020702800 D2549020703200
D2549020703400 D2549020703600 D2549020703800 D2549020704000
D2549020704200 D2549020704400 D2549020704800 D2549020705000
D2549020705200 D2549020705400 D2549020705600 D2549020706000
D2549020706200 D2549020706400 D2549020706600 D2549020706800
D2549020707000 D2549020707200 D2549020707400 D2549020707800
D2549020708200 D2549020708400 D2549020708600 D2549020708800
D2549020709000 D2549020709200 D2549020709400 D2549020709800
D2549020710000 D2549020710200 D2549020710400 D2549020710800
D2549020711000 D2549020711200 D2549020711400 D2549020712200
D2549020712400 D2549020713400 D2549020713600 D2549020714400
D2549030504200 D2549030504600 D2549030504800 D2549030505200
D2549030505600 D2549030505800 D2549030506200 D2549030506400
D2549030506800 D2549030507000 D2549030507200 D2549030507400
D2549030507600 D2549030507800 D2549030508200 D2549030508600
D2549030508800 D2549030509000 D2549030509200 D2549030509600
D2549030509800 D2549030510200 D2549030510400 D2549030510800
D2549030511200 D2549030511600 D2549030511800 D2549030512200
D2549030512400 D2549030512800 D2549030513000 D2549030513400
D2549030513600 D2549030514000 D2549030514200 D2549030514400
D2549030600000 D2549030600400 D2549030600600 D2549030600800
D2549030601000 D2549030601200 D2549030601600 D2549030602000
D2549030602400 D2549030602600 D2549030603000 D2549030603400
D2549030603600 D2549030604600 D2549030605000 D2549030605200
D2549030605800 R225401107-004 R225401134-016 R225401134-018 R225401136-

010 R225401136-016 R225401136-020 R225401137-000 R225401137-002 R225401137-004 R225401137-006 R225401137-008 R225401137-010 R225401137-012 R225401137-014 R225401142-000 R225401142-002 R225401145-002 R225401145-012 R225401152-000 R225401152-002 R225401152-004 R225401153-000 R225401159-000 R225401168-004 R225401168-006 R225401168-014 R225401168-016 R225401168-018 R225401168-028 R225401172-002 R225401172-004 R225401172-006 R225401172-008 R225401172-010 R225401175-000 R225401175-002 R225401176-000 R225401195-000 R225401196-000 R225401196-046 R225401600-000 R225401600-002

1. Disassembly of the Potable Water System (22D-1)

NOTE: **See TABLE 3619 for the references for the replacement procedures of permanent installed parts.**

IPL FIG. ITEM	COMPONENT PART NAME	IPL FIG. ITEM	REPLACEMENT PART NAME	SEE REPAIR TASK
22D-001 22D-200	Potable Water System Shutoff Valve Bracket	22D-210	Nut	Replacement of the Riveted Parts
22D-001	Potable Water System	22D-310	Insulation	Replacement of the Bonded Parts self adhesive
22D-001	Potable Water System	22D-320	Insulation	Replacement of the Bonded Parts self adhesive

Table 3619
Reference list for the replacement of permanent installed parts

(a) Disconnect the water faucet assembly 22D-010 from the water supply.

NOTE: **For further instructions, see CMMV 38-11-03_C3207 (water faucet assembly).**

(b) Remove the ground cable from the water faucet assembly 22D-010.

(c) Remove the screw 22D-110, the washer 22D-070, the spacer 22D-115 and the tubes of the water faucet assembly 22D-010 with the clamps 22D-100.

(d) Remove the tube of the water faucet assembly 22D-010 from the reducer elbow 22D-090.

(e) Remove the screw 22D-110, the washer 22D-070, the spacer 22D-115 and the tube of the water faucet assembly 22D-010 with the clamp 22D-100.

(f) Remove the tube of the water faucet assembly 22D-010 from the tee 22D-250.

(g) Remove the water faucet assembly 22D-010.

(h) Remove the reducer elbow 22D-090 from the water heater 22D-080.

NOTE: For further instructions, see CMMV 38-12-16_0AJJ0 (water heater).

(i) Remove the hose 22D-280 from the tee 22D-240.

(j) Remove the hose 22D-260 from the tees 22D-240, 22D-250.

(k) Remove the tee 22D-240 from the shutoff valve 22D-220.

(l) Remove the screw 22D-360, the washer 22D-370, the spacer 22D-350, the insert 22D-365 and the clamp 22D-340.

(m) Remove the tube 22D-270 from the shutoff valve 22D-220.

(n) Remove the tee 22D-250 from the water heater 22D-080.

(o) Remove the ground cable from the water heater 22D-080.

(p) Remove the clamps 22D-050 with the water heater 22D-080 from the brackets 22D-040.

(q) Remove the screws 22D-060, the washers 22D-070 and the brackets 22D-040 from the lavatory structure.

(r) Remove the ground cable from the shutoff valve 22D-220.

(s) Remove the screws 22D-150, the washers 22D-070, the nuts 22D-160 and the bracket 22D-140 with the grommet 22D-130 from the shutoff valve rod 22D-120 and from the lavatory structure.

(t) Remove the screws 22D-150, the washers 22D-190 and the bracket 22D-180 with the retaining ring 22D-170, the grommet 22D-130, the shutoff valve rod 22D-120 and the shutoff valve bracket 22D-200 from the shutoff valve 22D-220.

(u) Remove the screws 22D-230 and the shutoff valve bracket 22D-200 from the shutoff valve 22D-220.

SUB TASK 25-41-51-040-064-C01

D2547160900200 D2547160900400 D2549010400000 D2549010400200
D2549010400400 D2549010400600 D2549010400800 D2549010401000
D2549010401400 D2549010401800 D2549010402000 D2549010402200
D2549010402400 D2549010402600 D2549010402800 D2549010403000
D2549010403400 D2549010403600 D2549010403800 D2549010404200
D2549010404400 D2549010405000 D2549010405200 D2549010405600
D2549010405800 D2549010406000 D2549010406200 D2549010406400
D2549010406800 D2549010407000 D2549010605000 D2549010605200
D2549010605800 D2549010606000 D2549010606200 D2549010606600
D2549010607200 D2549010607600 D2549010608200 D2549010608400
D2549010608800 D2549010609200 D2549010609600 D2549010609800
D2549010610000 D2549010610400 D2549010610800 D2549010611000
D2549010611200 D2549010611800 D2549010612400 D2549010612600
D2549010613000 D2549010613200 D2549010613400 D2549010613800
D2549010614200 D2549010614600 D2549020300000 D2549020300400
D2549020300600 D2549020300800 D2549020301000 D2549020301600
D2549020301800 D2549020302000 D2549020302800 D2549020400000
D2549020400200 D2549020400400 D2549020400600 D2549020400800
D2549020401000 D2549020401200 D2549020401400 D2549020401600
D2549020402000 D2549020402600 D2549020403200 D2549020403400
D2549020403600 D2549020403800 D2549020404000 D2549020404400
D2549020404600 D2549020404800 D2549020405000 D2549020405200
D2549020405400 D2549020405600 D2549020406200 D2549020406400
D2549020406600 D2549020406800 D2549020407000 D2549020407400
D2549020407600 D2549020407800 D2549020408000 D2549020408200
D2549020408600 D2549020409000 D2549020409200 D2549020409400
D2549020409600 D2549020409800 D2549020410200 D2549020410400
D2549020410600 D2549020410800 D2549020411000 D2549020411200
D2549020411400 D2549020411600 D2549020411800 D2549020412000
D2549020412200 D2549020412400 D2549020412600 D2549020413000
D2549020413200 D2549020413400 D2549020413600 D2549020413800
D2549020414000 D2549020414200 D2549020414600 D2549020414800
D2549020502200 D2549020505600 D2549020507400 D2549020507600
D2549020507800 D2549020508000 D2549020508200 D2549020508400
D2549020508600 D2549020508800 D2549020509000 D2549020509200
D2549020509600 D2549020509800 D2549020510000 D2549020510600
D2549020510800 D2549020511000 D2549020511200 D2549020511600
D2549020511800 D2549020512000 D2549020512200 D2549020512400
D2549020512600 D2549020513000 D2549020513200 D2549020513400
D2549020513600 D2549020513800 D2549020514000 D2549020514200
D2549020514400 D2549020514600 D2549020514800 D2549020705800
D2549020708000 D2549020709600 D2549020710600 D2549020711600
D2549020712800 D2549020713000 D2549020713200 D2549020714000

D2549020714600 D2549020800000 D2549020800200 D2549020800400
D2549020800600 D2549020800800 D2549020801200 D2549020801400
D2549020801600 D2549020801800 D2549020802000 D2549020802400
D2549020802600 D2549020803000 D2549020803200 D2549020803400
D2549020803600 D2549020803800 D2549020804400 D2549020804800
D2549020805000 D2549020805200 D2549020805600 D2549020805800
D2549020806200 D2549020806400 D2549020806600 D2549020806800
D2549020807000 D2549020807200 D2549020807400 D2549020807600
D2549020807800 D2549020808200 D2549020808400 D2549020808600
D2549020808800 D2549020809000 D2549020809400 D2549020809600
D2549020809800 D2549020810000 D2549020810200 D2549020810400
D2549020810600 D2549020810800 D2549020811200 D2549020811400
D2549020811600 D2549020811800 D2549020812000 D2549020812200
D2549020812400 D2549020812600 D2549020812800 D2549020813000
D2549020813200 D2549020813400 D2549020813600 D2549020813800
D2549020814200 D2549020814400 D2549020814600 D2549020814800
D2549030400000 D2549030400200 D2549030401000 D2549030401400
D2549030401600 D2549030401800 D2549030402200 D2549030403000
D2549030403800 D2549030404800 D2549030405400 D2549030405600
D2549030405800 D2549030406000 D2549030406400 D2549030406600
D2549030407000 D2549030407200 D2549030407400 D2549030407600
D2549030408000 D2549030408200 D2549030408400 D2549030408600
D2549030409200 D2549030409400 D2549030409600 D2549030410200
D2549030410400 D2549030410600 D2549030410800 D2549030411200
D2549030411400 D2549030411800 D2549030412200 D2549030412400
D2549030412600 D2549030412800 D2549030413000 D2549030413200
D2549030413600 D2549030414000 D2549030414200 D2549030414400
D2549030414600 D2549030503800 D2549030603200 D2549030604200
D2549030605400 D2549030606000 D2549030606200 D2549030606400
D2549030606600 D2549030607000 D2549030607200 D2549030607600
D2549030607800 D2549030608400 D2549030608600 D2549030609200
D2549030610000 D2549030610400 D2549030610600 D2549030611000
D2549030611400 D2549030611600 D2549030611800 D2549030612000
D2549030612200 D2549030612600 D2549030612800 D2549030613400
D2549030613800 D2549030614000 D2549030614200 D2549030614400
D2549030614600 D2549030614800 D2549030700000 D2549030700200
D2549030700400 D2549030700800 D2549030701000 D2549030701400
D2549030701600 D2549030701800 D2549030702200 D2549030702600
D2549030703000 D2549030703200 D2549030703400 D2549030703600
D2549030703800 D2549030704000 D2549030704200 D2549030704600
D2549030704800 D2549030705200 D2549030705600 D2549040500200
D2549040500400 D2549040500600 D2549040500800 D2549040501000
D2549040501200 D2549040501400 D2549040501600 D2549040501800
D2549040502000 R225401115-000 R225401134-008 R225401134-024 R225401134-026
R225401134-028 R225401136-000 R225401136-004 R225401136-006 R225401136-008
R225401136-012 R225401136-014 R225401136-018 R225401136-022 R225401136-024
R225401137-016 R225401145-004 R225401145-006 R225401145-008 R225401145-010

R225401145-014 R225401152-006 R225401152-008 R225401152-010 R225401168-000 R225401168-002 R225401168-008 R225401168-010 R225401168-012R225401168-020 R225401168-022 R225401168-024 R225401168-026 R225401172-000 R225401172-012 R225401172-014 R225401172-016 R225401172-018 R225401192-000 R225401192-002 R225401196-002 R225401196-004 R225401196-006 R225401196-008 R225401196-012 R225401196-014 R225401196-016 R225401196-018 R225401196-020 R225401196-022 R225401196-024 R225401196-034 R225401196-036 R225401196-038 R225401196-042 R225401196-044 R225401196-048 R225401196-050 R225401196-052 R225401196-054 R225401196-058 R225401196-060 R225401196-062 R225401196-064 R225401196-066 R225401196-068 R225401196-070 R225401199-000 R225401199-002 R225401199-004 R225401199-006 R225401199-008 R225401199-010 R225401199-012 R225401600-004 R225401602-000 R225401605-000 R225401605-002 R225401609-000 R225401611-000 R225401611-006 R225401611-008 R225401611-010 R225401611-012 R225401611-014 R225401611-016 R225401611-018 R225401611-020 R225401613-000 R225401619-000 R225401619-002 R225401622-000 R225401622-002 R225401624-000 R225401625-000 R225401627-000 R225401627-002 R225401627-004 R225401629-000 R225401629-002 R225401639-000 R225401639-002 R225401643-000 R225401643-002 R225401643-004 R225401643-006 R225401643-008 R225401646-000 R225401646-002 R225401647-000 R225401648-000 R225401648-002 R225401648-004 R225401648-006 R225401648-008 R225401649-000 R225401656-000 R225401656-002 R225401658-000 R225401662-000 R225401662-002 R225401671-000 R225401671-002 R225401673-000 R225401673-002 R225401673-004 R225401673-006 R225401675-000 R225401676-000 R225401683-000 R225401688-000 R225401689-004 R225401689-006 R225401691-000 R225401693-000 R225401697-000 R225401697-002 R225401803-000 R225401803-002 R225401808-000 R225401814-000

2. Disassembly of the Potable Water System (22D-1)

NOTE: **See TABLE 3620 for the references for the replacement procedures of permanent installed parts.**

IPL FIG. ITEM	COMPONENT PART NAME	IPL FIG. ITEM	REPLACEMENT PART NAME	SEE REPAIR TASK
22D-001 22D-200	Potable Water System Shutoff Valve Bracket	22D-210	Nut	Replacement of the Riveted Parts
22D-001	Potable Water System	22D-310	Insulation	Replacement of the Bonded Parts self adhesive
22D-001	Potable Water System	22D-320	Insulation	Replacement of the Bonded Parts self adhesive

Table 3620
Reference list for the replacement of permanent installed parts

(a) Disconnect the water faucet assembly 22D-010 from the water supply.

NOTE: **For further instructions, see CMMV 38-11-03_C3207 (water faucet assembly).**

(b) Remove the ground cable from the water faucet assembly 22D-010.

(c) Remove the screw 22D-110, the washer 22D-070, the spacer 22D-115 and the tubes of the water faucet assembly 22D-010 with the clamps 22D-100.

(d) Remove the tube of the water faucet assembly 22D-010 from the reducer elbow 22D-090.

(e) Remove the screw 22D-110, the washer 22D-070, the spacer 22D-115 and the tube of the water faucet assembly 22D-010 with the clamp 22D-100.

(f) Remove the tube of the water faucet assembly 22D-010 from the tee 22D-250.

(g) Remove the water faucet assembly 22D-010.

(h) Remove the reducer elbow 22D-090 from the water heater 22D-080.

NOTE: For further instructions, see CMMV 38-12-16_0AJJ0 (water heater).

(i) Remove the hose 22D-280 from the tee 22D-240.

(j) Remove the hose 22D-260 from the tees 22D-240, 22D-250.

(k) Remove the tee 22D-240 from the shutoff valve 22D-220.

(l) Remove the screw 22D-360, the washer 22D-370, the spacer 22D-350, the insert 22D-365 and the clamp 22D-340.

(m) Remove the tube 22D-270 from the shutoff valve 22D-220.

(n) Remove the tee 22D-250 from the water heater 22D-080.

(o) Remove the ground cable from the water heater 22D-080.

(p) Remove the clamps 22D-050 with the water heater 22D-080 from the brackets 22D-040.

(q) Remove the screws 22D-060, the washers 22D-070 and the brackets 22D-040 from the lavatory structure.

(r) Remove the ground cable from the shutoff valve 22D-220.

(s) Remove the screws 22D-150, the washers 22D-070, the nuts 22D-160 and the bracket 22D-140 with the grommet 22D-130 from the shutoff valve rod 22D-120 and from the lavatory structure.

(t) Remove the screws 22D-150, the washers 22D-190 and the bracket 22D-180 with the retaining ring 22D-170, the grommet 22D-130, the shutoff valve rod 22D-120 and the shutoff valve bracket 22D-200 from the shutoff valve 22D-220.

(u) Remove the screws 22D-290, the washers 22D-300 and the shutoff valve bracket 22D-200 from the shutoff valve 22D-220.

(v) Remove the screw 22D-410, the washer 22D-370, the spacer 22D-380, the clamps 22D-340 and the tube 22D-270.

SUB TASK 25-41-51-040-064-D01
D2549020806000 R225401196-010 R225401196-040 R225401196-056

3. Disassembly of the Potable Water System (22D-1)

NOTE: **See TABLE 3621 for the references for the replacement procedures of permanent installed parts.**

More data for bonded parts are given in column SEE REPAIR TASK. Use the data for the selection of the related repair solution.

IPL FIG. ITEM	COMPONENT PART NAME	IPL FIG. ITEM	REPLACEMENT PART NAME	SEE REPAIR TASK
22D-001 22D-200	Potable Water System Shutoff Valve Bracket	22D-210	Nut	Replacement of the Riveted Parts
22D-001	Potable Water System	22D-310	Insulation	Replacement of the Bonded Parts self adhesive
22D-001	Potable Water System	22D-320	Insulation	Replacement of the Bonded Parts self adhesive

Table 3621
Reference list for the replacement of permanent installed parts

(a) Disconnect the water faucet assembly 22D-010 from the water supply.

NOTE: **For further instructions, see CMMV 38-11-03_C3207 (water faucet assembly).**

(b) Remove the ground cable from the water faucet assembly 22D-010.

(c) Remove the screw 22D-110, the washer 22D-070, the spacer 22D-115 and the tubes of the water faucet assembly 22D-010 with the clamps 22D-100.

(d) Remove the tube of the water faucet assembly 22D-010 from the reducer elbow 22D-090.

(e) Remove the screw 22D-110, the washer 22D-070, the spacer 22D-115 and the tube of the water faucet assembly 22D-010 with the clamp 22D-100.

(f) Remove the tube of the water faucet assembly 22D-010 from the tee 22D-250.

(g) Remove the water faucet assembly 22D-010.

(h) Remove the reducer elbow 22D-090 from the water heater 22D-080.

NOTE: For further instructions, see CMMV 38-12-16_0AJJ0 (water heater).

(i) Remove the hose 22D-280 from the tee 22D-240.

(j) Remove the screw 22D-410, the washer 22D-370, the spacer 22D-380 and the hose 22D-260 with the clamps 22D-390, 22D-400.

(k) Remove the hose 22D-260 from the tees 22D-240, 22D-250.

(l) Remove the tee 22D-240 from the shutoff valve 22D-220.

(m) Remove the screw 22D-360, the washer 22D-370, the spacers 22D-350, the insert 22D-365 and the tube 22D-270 with the clamp 22D-340.

(n) Remove the tube 22D-270 from the shutoff valve 22D-220.

(o) Remove the tee 22D-250 from the water heater 22D-080.

(p) Remove the ground cable from the water heater 22D-080.

(q) Remove the clamps 22D-050 with the water heater 22D-080 from the brackets 22D-040.

(r) Remove the screws 22D-060, the washers 22D-070 and the brackets 22D-040 from the lavatory structure.

(s) Remove the ground cable from the shutoff valve 22D-220.

(t) Remove the screws 22D-150, the washers 22D-070, the nuts 22D-160 and the bracket 22D-140 with the grommet 22D-130 from the shutoff valve rod 22D-120 and from the lavatory structure.

(u) Remove the screws 22D-150, the washers 22D-190 and the bracket 22D-180 with the retaining ring 22D-170, the grommet 22D-130, the shutoff valve rod 22D-120 and the shutoff valve bracket 22D-200 from the shutoff valve 22D-220.

(v) Remove the screws 22D-290, the washers 22D-300 and the shutoff valve bracket 22D-200 from the shutoff valve 22D-220.

TASK 25-41-51-000-819-F01
D2549010401600 D2549010514000 D2549010610200 D2549010611400 D2549020506200 D2549020506400 D2549020507000 D2549020507200 D2549020701000 D2549030402400 D2549030403600 D2549030404400 D2549030505400 D2549030506600 D2549030509400 D2549030513800 D2549030601800 D2549030603800 D2549030607400 D2549030608800 D2549030611200 D2549030613200

187. Disassembly of the Potable Water System

A. General

A complete disassembly of the component is not necessary and not recommended.

Do not disassemble the component more than it is necessary for:

- Cleaning
- Visual Inspection
- Replacement of defective parts.

B. Job Set-up Information

(1) Not applicable

C. Procedure

WARNING: BE CAREFUL WHEN YOU USE SOLVENTS/CLEANING AGENTS, SEALANTS AND OTHER MATERIALS. OBEY THE MATERIAL MANUFACTURER'S INSTRUCTIONS AND THE LOCAL REGULATIONS. MAKE SURE THAT THERE IS A GOOD FLOW OF AIR THROUGH THE WORK AREA. DO NOT BREATHE THE FUMES. DO NOT SMOKE. DO NOT USE THESE MATERIALS NEAR A FLAME, SPARKS OR SOURCES OF HEAT. USE PROTECTIVE CLOTHING, GOGGLES AND GLOVES. IF YOU GET ONE OF THESE MATERIALS ON YOUR SKIN OR IN YOUR EYES, FLUSH IT AWAY WITH A FLOW OF CLEAN WATER. IF YOU GET ONE OF THESE MATERIALS IN YOUR MOUTH, GET IMMEDIATE MEDICAL AID. IN GENERAL, THESE MATERIALS ARE POISONOUS, FLAMMABLE AND SKIN IRRITANTS.

CAUTION: DO ALL THE WORK ON A CLEAN, SOFT SURFACE TO PREVENT DAMAGE TO THE COMPONENTS.

SUB TASK 25-41-51-040-065-A01
D2549010514000 D2549020506200 D2549020506400 D2549020507000

D2549020507200 D2549020701000 D2549030505400 D2549030506600
D2549030509400 D2549030513800 D2549030601800 D2549030603800

1. Disassembly of the Potable Water System (22E-1)

NOTE: **See TABLE 3622 for the references for the replacement procedures of permanent installed parts.**

IPL FIG. ITEM	COMPONENT PART NAME	IPL FIG. ITEM	REPLACEMENT PART NAME	SEE REPAIR TASK
22E-001 22E-200	Potable Water System Shutoff Valve Bracket	22E-210	Nut	Replacement of the Riveted Parts

Table 3622
Reference list for the replacement of permanent installed parts

(a) Disconnect the water faucet assembly 22E-010 from the water supply.

NOTE: **For further instructions, see CMMV 38-11-03_C3207 (water faucet assembly).**

(b) Remove the ground cable from the water faucet assembly 22E-010.

(c) Remove the screw 22E-110, the washer 22E-070, the spacer 22E-115 and the tubes of the water faucet assembly 22E-010 with the clamps 22E-100.

(d) Remove the tube of the water faucet assembly 22E-010 from the reducer elbow 22E-090.

(e) Remove the screw 22E-110, the washer 22E-070, the spacer 22E-115 and the tube of the water faucet assembly 22E-010 with the clamp 22E-100.

(f) Remove the tube of the water faucet assembly 22E-010 from the tee 22E-250.

(g) Remove the water faucet assembly 22E-010.

(h) Remove the reducer elbow 22E-090 from the water heater 22E-080.

NOTE: **For further instructions, see CMMV 38-12-16_0AJJ0 (water heater).**

(i) Remove the tee 22E-250 from the water heater 22E-080 and from the tube 22E-320.

(j) Remove the tube 22E-320 from the tee 22E-250.

(k) Remove the tee 22E-250 from the tube 22E-300 and from the nonreturn valve 22E-330.

NOTE: For further instructions, see CMMV 38-10-15_U9084 (nonreturn valve).

(l) Remove the ground cable from the nonreturn valve 22E-330.

(m) Remove the nonreturn valve 22E-330 from the tee 22E-340.

(n) Remove the tee 22E-340 from the hoses 22E-260, 22E-310.

(o) Remove the tube 22E-300 from the drinking water filter assembly 22E-290.

NOTE: For further instructions, see CMMV 38-12-23_61372 (drinking water filter assembly).

(p) Remove the hose 22E-310 from the drinking water filter assembly 22E-290.

(q) Remove the hose 22E-260 from the tee 22E-240.

(r) Remove the hose 22E-280 from the tee 22E-240.

(s) Remove the tube 22E-270 from the shutoff valve 22E-220.

(t) Remove the tee 22E-240 from the shutoff valve 22E-220.

(u) Remove the screws 22E-060, the washers 22E-070 and the drinking water filter assembly 22E-290 from the lavatory structure.

(v) Remove the ground cable from the water heater 22E-080.

(w) Remove the clamps 22E-050 with the water heater 22E-080 from the brackets 22E-040.

(x) Remove the screws 22E-060, the washers 22E-070 and the brackets 22E-040 from the lavatory structure.

(y) Remove the ground cable from the shutoff valve 22E-220.

(z) Remove the screws 22E-150, the washers 22E-070, the nuts 22E-160 and the bracket 22E-140 with the grommet 22E-130 from the shutoff valve rod 22E-120 and from the lavatory structure.

(aa) Remove the screws 22E-150, the washers 22E-190 and the bracket 22E-180 with the retaining ring 22E-170, the grommet 22E-130, the shutoff valve rod 22E-120 and the shutoff valve bracket 22E-200 from the shutoff valve 22E-220 and from the lavatory structure.

(ab) Remove the screws 22E-230 and the shutoff valve bracket 22E-200 from the shutoff valve 22E-220.

SUB TASK 25-41-51-040-065-C01
D2549010401600 D2549010610200 D2549010611400 D2549030402400 D2549030403600 D2549030404400 D2549030607400 D2549030608800 D2549030611200 D2549030613200

2. Disassembly of the Potable Water System (22E-1)

NOTE: **See TABLE 3623 for the references for the replacement procedures of permanent installed parts.**

IPL FIG. ITEM	COMPONENT PART NAME	IPL FIG. ITEM	REPLACEMENT PART NAME	SEE REPAIR TASK
22E-001 22E-200	Potable Water System Shutoff Valve Bracket	22E-210	Nut	Replacement of the Riveted Parts

Table 3623
Reference list for the replacement of permanent installed parts

(a) Disconnect the water faucet assembly 22E-010 from the water supply.

NOTE: **For further instructions, see CMMV 38-11-03_C3207 (water faucet assembly).**

(b) Remove the ground cable from the water faucet assembly 22E-010.

(c) Remove the screw 22E-110, the washer 22E-070, the spacer 22E-115 and the tubes of the water faucet assembly 22E-010 with the clamps 22E-100.

(d) Remove the tube of the water faucet assembly 22E-010 from the reducer elbow 22E-090.

(e) Remove the screw 22E-110, the washer 22E-070, the spacer 22E-115 and the tube of the water faucet assembly 22E-010 with the clamp 22E-100.

(f) Remove the tube of the water faucet assembly 22E-010 from the tee 22E-250.

(g) Remove the water faucet assembly 22E-010.

(h) Remove the reducer elbow 22E-090 from the water heater 22E-080.

NOTE: For further instructions, see CMMV 38-12-16_0AJJ0 (water heater).

(i) Remove the tee 22E-250 from the water heater 22E-080 and from the tube 22E-320.

(j) Remove the tube 22E-320 from the tee 22E-250.

(k) Remove the tee 22E-250 from the tube 22E-300 and from the nonreturn valve 22E-330.

NOTE: For further instructions, see CMMV 38-10-15_U9084 (nonreturn valve).

(l) Remove the ground cable from the nonreturn valve 22E-330.

(m) Remove the nonreturn valve 22E-330 from the tee 22E-340.

(n) Remove the tee 22E-340 from the hoses 22E-260, 22E-310.

(o) Remove the tube 22E-300 from the drinking water filter assembly 22E-290.

NOTE: For further instructions, see CMMV 38-12-23_61372 (drinking water filter assembly).

(p) Remove the hose 22E-310 from the drinking water filter assembly 22E-290.

(q) Remove the hose 22E-260 from the tee 22E-240.

(r) Remove the hose 22E-280 from the tee 22E-240.

(s) Remove the tube 22E-270 from the shutoff valve 22E-220.

(t) Remove the tee 22E-240 from the shutoff valve 22E-220.

(u) Remove the screws 22E-060, the washers 22E-070 and the drinking water filter assembly 22E-290 from the lavatory structure.

(v) Remove the ground cable from the water heater 22E-080.

(w) Remove the clamps 22E-050 with the water heater 22E-080 from the brackets 22E-040.

(x) Remove the screws 22E-060, the washers 22E-070 and the brackets 22E-040 from the lavatory structure.

(y) Remove the ground cable from the shutoff valve 22E-220.

(z) Remove the screws 22E-150, the washers 22E-070, the nuts 22E-160 and the bracket 22E-140 with the grommet 22E-130 from the shutoff valve rod 22E-120 and from the lavatory structure.

(aa) Remove the screws 22E-150, the washers 22E-190 and the bracket 22E-180 with the retaining ring 22E-170, the grommet 22E-130, the shutoff valve rod 22E-120 and the shutoff valve bracket 22E-200 from the shutoff valve 22E-220 and from the lavatory structure.

(ab) Remove the screws 22E-350, the washers 22E-360 and the shutoff valve bracket 22E-200 from the shutoff valve 22E-220.

TASK 25-41-51-000-819-G01
D2549010403200 D2549010404600 D2549010404800 D2549010510400 D2549010601200
D2549010603200 D2549010604800 D2549010606400 D2549010607800 D2549010609400
D2549010610600 D2549020412800 D2549030413400 D2549030700600 D2549030704400
R225401183-000 R225401183-002 R225401183-004 R225401183-006 R225401183-008
R225401603-000 R225401685-000 R225401685-002 R225401811-000

188. Disassembly of the Potable Water System

A. General

A complete disassembly of the component is not necessary and not recommended.

Do not disassemble the component more than it is necessary for:

- Cleaning
- Visual Inspection
- Replacement of defective parts.

B. Job Set-up Information

(1) Not applicable

C. Procedure

WARNING: BE CAREFUL WHEN YOU USE SOLVENTS/CLEANING AGENTS, SEALANTS AND OTHER MATERIALS. OBEY THE MATERIAL MANUFACTURER'S INSTRUCTIONS AND THE LOCAL REGULATIONS. MAKE SURE THAT THERE IS A GOOD FLOW OF AIR THROUGH THE WORK AREA. DO NOT BREATHE THE FUMES. DO NOT SMOKE. DO NOT USE THESE MATERIALS NEAR A FLAME, SPARKS OR SOURCES OF HEAT. USE PROTECTIVE CLOTHING, GOGGLES AND GLOVES. IF YOU GET ONE OF THESE MATERIALS ON YOUR SKIN OR IN YOUR EYES, FLUSH IT AWAY WITH A FLOW OF CLEAN WATER. IF YOU GET ONE OF THESE MATERIALS IN YOUR MOUTH, GET IMMEDIATE MEDICAL AID. IN GENERAL, THESE MATERIALS ARE POISONOUS, FLAMMABLE AND SKIN IRRITANTS.

CAUTION: DO ALL THE WORK ON A CLEAN, SOFT SURFACE TO PREVENT DAMAGE TO THE COMPONENTS.

SUB TASK 25-41-51-040-066-A01

D2549010510400 D2549010601200 D2549010603200 D2549010604800 R225401603-000

1. Disassembly of the Potable Water System (22F-1)

NOTE: **See TABLE 3624 for the references for the replacement procedures of permanent installed parts.**

IPL FIG. ITEM	COMPONENT PART NAME	IPL FIG. ITEM	REPLACEMENT PART NAME	SEE REPAIR TASK
22F-001 22F-220	Potable Water System Shutoff Valve Bracket	22F-230	Nut	Replacement of the Riveted Parts

Table 3624
Reference list for the replacement of permanent installed parts

(a) Disconnect the infrared faucet assembly 22F-010 from the water supply and from the electrical supply.

NOTE: **For further instructions, see CMMV 38-20-20_80477 (infrared faucet assembly).**

(b) Remove the ground cable from the infrared faucet assembly 22F-010.

(c) Remove the screw 22F-020 and the infrared faucet assembly 22F-010.

(d) Remove the screws 22F-120, the washers 22F-060, the spacers 22F-110 and the hose 22F-090 with the clamps 22F-100.

(e) Remove the hoses 22F-080, 22F-090 from the water heater 22F-070, from the tee 22F-270 and from the valve of the infrared faucet assembly 22F-010.

NOTE: **For further instructions, see CMMV 38-12-16_0AJJ0 (water heater).**

(f) Remove the screws 22F-050, the washers 22F-060, the nuts 22F-180 and the remaining parts of the infrared faucet assembly 22F-010.

(g) Remove the tee 22F-270 from the water heater 22F-070 and from the hose 22F-280.

(h) Remove the hose 22F-280 from the tee 22F-260.

(i) Remove the hose 22F-300 from the tee 22F-260.

(j) Remove the tee 22F-260 from the shutoff valve 22F-240.

(k) Remove the tube 22F-290 from the shutoff valve 22F-240.

(l) Remove the ground cable from the water heater 22F-070.

(m) Remove the clamps 22F-040 with the water heater 22F-070 from the brackets 22F-030.

(n) Remove the screws 22F-050, the washers 22F-060 and the brackets 22F-030 from the lavatory structure.

(o) Remove the screws 22F-050, the washers 22F-060 and the angle 22F-130 from the lavatory structure.

(p) Remove the ground cable from the shutoff valve 22F-240.

(q) Remove the screws 22F-170, the washers 22F-060, the nuts 22F-180 and the bracket 22F-160 with the grommet 22F-150 from the shutoff valve rod 22F-140 and from the lavatory structure.

(r) Remove the screws 22F-170, the washers 22F-210 and the bracket 22F-200 with the retaining ring 22F-190, the grommet 22F-150, the shutoff valve rod 22F-140 and the shutoff valve bracket 22F-220 from the shutoff valve 22F-240 and from the lavatory structure.

(s) Remove the screws 22F-250 and the shutoff valve bracket 22F-220 from the shutoff valve 22F-240.

SUB TASK 25-41-51-040-066-B01
D2549010403200 D2549010404600 D2549010404800 D2549010606400 D2549010607800 D2549010609400 D2549010610600 D2549020412800 D2549030413400 D2549030700600 D2549030704400 R225401183-000 R225401183-002 R225401183-004 R225401183-006 R225401183-008 R225401685-000 R225401685-002 R225401811-000

2. Disassembly of the Potable Water System (22F-1)

NOTE: **See TABLE 3625 for the references for the replacement procedures of permanent installed parts.**

IPL FIG. ITEM	COMPONENT PART NAME	IPL FIG. ITEM	REPLACEMENT PART NAME	SEE REPAIR TASK
22F-001 22F-220	Potable Water System Shutoff Valve Bracket	22F-230	Nut	Replacement of the Riveted Parts

Table 3625
Reference list for the replacement of permanent installed parts

(a) Disconnect the infrared faucet assembly or the water faucet assembly 22F-010 from the water supply and from the electrical supply.

NOTE: **For further instructions, see CMMV 38-20-20_80477 (infrared faucet assembly or water faucet assembly).**

(b) Remove the ground cable from the infrared faucet assembly or the water faucet assembly 22F-010.

(c) Remove the screw 22F-020 and the infrared faucet assembly or the water faucet assembly 22F-010.

(d) Remove the screws 22F-120, the washers 22F-060, the spacers 22F-110 and the hose 22F-090 with the clamps 22F-100.

(e) Remove the hoses 22F-080, 22F-090 from the water heater 22F-070, from the tee 22F-270 and from the valve of the infrared faucet assembly or the water faucet assembly 22F-010.

NOTE: **For further instructions, see CMMV 38-12-16_0AJJ0 (water heater).**

(f) Remove the screws 22F-050, the washers 22F-060, the nuts 22F-180 and the remaining parts of the infrared faucet assembly or the water faucet assembly 22F-010.

(g) Remove the tee 22F-270 from the water heater 22F-070 and from the hose 22F-280.

(h) Remove the hose 22F-280 from the tee 22F-260.

(i) Remove the hose 22F-300 from the tee 22F-260.

(j) Remove the tee 22F-260 from the shutoff valve 22F-240.

(k) Remove the tube 22F-290 from the shutoff valve 22F-240.

(l) Remove the ground cable from the water heater 22F-070.

(m) Remove the clamps 22F-040 with the water heater 22F-070 from the brackets 22F-030.

(n) Remove the screws 22F-050, the washers 22F-060 and the brackets 22F-030 from the lavatory structure.

(o) Remove the screws 22F-050, the washers 22F-060 and the angle 22F-130 from the lavatory structure.

(p) Remove the ground cable from the shutoff valve 22F-240.

(q) Remove the screws 22F-170, the washers 22F-060, the nuts 22F-180 and the bracket 22F-160 with the grommet 22F-150 from the shutoff valve rod 22F-140 and from the lavatory structure.

(r) Remove the screws 22F-170, the washers 22F-210 and the bracket 22F-200 with the retaining ring 22F-190, the grommet 22F-150, the shutoff valve rod 22F-140 and the shutoff valve bracket 22F-220 from the shutoff valve 22F-240 and from the lavatory structure.

(s) Remove the screws 22F-310, the washers 22F-320 and the shutoff valve bracket 22F-220 from the shutoff valve 22F-240.

TASK 25-41-51-000-819-H01

D2549010405400 D2549010606800 D2549010607000 D2549010607400 D2549010608600
D2549010609000 D2549010611600 D2549010612000 D2549010612200 D2549010613600
D2549010614800 D2549020402400 D2549020403000 D2549020404200 D2549020405800
D2549020406000 D2549020408800 D2549020512800 D2549020605600 D2549020608200
D2549020609200 D2549020612000 D2549020613600 D2549020701200 D2549020704600
D2549020707600 D2549020801000 D2549020802200 D2549020802800 D2549020804000
D2549020804200 D2549020814000 D2549030400400 D2549030400600 D2549030401200
D2549030402000 D2549030402600 D2549030402800 D2549030403400 D2549030404200
D2549030404600 D2549030405000 D2549030405200 D2549030406800 D2549030407800
D2549030409000 D2549030409800 D2549030410000 D2549030411600 D2549030414800
D2549030504000 D2549030506000 D2549030508000 D2549030508400 D2549030510000
D2549030510600 D2549030511400 D2549030513200 D2549030514600 D2549030600200
D2549030601400 D2549030602200 D2549030602800 D2549030604400 D2549030604800
D2549030605600 D2549030606800 D2549030608000 D2549030608200 D2549030609000
D2549030609800 D2549030612400 D2549030702000 D2549030702400 D2549030702800
R225401134-002 R225401134-004 R225401134-006 R225401134-010 R225401134-012
R225401134-014 R225401134-020 R225401134-022 R225401134-030 R225401134-032
R225401134-034 R225401134-036 R225401134-038 R225401160-000 R225401160-002
R225401614-000 R225401618-000 R225401618-002 R225401691-002

189. Disassembly of the Potable Water System

A. General

A complete disassembly of the component is not necessary and not recommended.

Do not disassemble the component more than it is necessary for:

- Cleaning
- Visual Inspection
- Replacement of defective parts.

B. Job Set-up Information

(1) Not applicable

C. Procedure

WARNING: **BE CAREFUL WHEN YOU USE SOLVENTS/CLEANING AGENTS, SEALANTS AND OTHER MATERIALS. OBEY THE MATERIAL MANUFACTURER'S INSTRUCTIONS AND THE LOCAL REGULATIONS. MAKE SURE THAT THERE IS A GOOD FLOW OF AIR THROUGH THE WORK AREA. DO NOT BREATHE THE FUMES. DO NOT SMOKE. DO NOT USE THESE MATERIALS NEAR A FLAME, SPARKS OR SOURCES OF HEAT. USE PROTECTIVE CLOTHING, GOGGLES AND GLOVES. IF YOU GET ONE OF THESE MATERIALS ON YOUR SKIN OR IN YOUR EYES, FLUSH IT AWAY WITH A FLOW OF CLEAN WATER. IF YOU GET ONE OF THESE MATERIALS IN YOUR MOUTH, GET IMMEDIATE MEDICAL AID. IN GENERAL, THESE MATERIALS ARE POISONOUS, FLAMMABLE AND SKIN IRRITANTS.**

CAUTION: **DO ALL THE WORK ON A CLEAN, SOFT SURFACE TO PREVENT DAMAGE TO THE COMPONENTS.**

SUB TASK 25-41-51-040-067-A01

D2549020605600 D2549020608200 D2549020609200 D2549020612000 D2549020613600 D2549020701200 D2549020704600 D2549020707600 D2549030504000 D2549030506000 D2549030508000 D2549030508400 D2549030510000 D2549030510600 D2549030511400 D2549030513200 D2549030514600 D2549030601400 D2549030602200 D2549030602800 D2549030604400 D2549030604800 R225401134-002 R225401134-004 R225401134-006 R225401134-020 R225401134-022 R225401160-000 R225401160-002

1. Disassembly of the Potable Water System (22G-1)

NOTE: **See TABLE 3626 for the references for the replacement procedures of permanent installed parts.**

More data for bonded parts are given in column SEE REPAIR TASK. Use the data for the selection of the related repair solution.

IPL FIG. ITEM	COMPONENT PART NAME	IPL FIG. ITEM	REPLACEMENT PART NAME	SEE REPAIR TASK
22G-001 22G-180	Potable Water System Shutoff Valve Bracket	22G-190	Nut	Replacement of the Riveted Parts
22G-001	Potable Water System	22G-300	Insulation	Replacement of the Bonded Parts self adhesive
22G-001	Potable Water System	22G-310	Insulation	Replacement of the Bonded Parts self adhesive

Table 3626
Reference list for the replacement of permanent installed parts

(a) Disconnect the water faucet assembly 22G-010 from the water supply.

NOTE: **For further instructions, see CMMV 38-11-03_C3207 (water faucet assembly).**

(b) Remove the ground cable from the water faucet assembly 22G-010.

(c) Remove the screw 22G-090, the washer 22G-050, the spacer 22G-095 and the tubes of the water faucet assembly 22G-010 with the clamps 22G-080.

(d) Remove the tube of the water faucet assembly 22G-010 from the reducer elbow 22G-070.

(e) Remove the screw 22G-090, the washer 22G-050, the spacer 22G-095 and the tube of the water faucet assembly 22G-010 with the clamp 22G-080.

(f) Remove the tube of the water faucet assembly 22G-010 from the tee 22G-230.

(g) Remove the water faucet assembly 22G-010.

(h) Remove the reducer elbow 22G-070 from the water heater 22G-060.

NOTE: For further instructions, see CMMV 38-12-16_0AJJ0 (water heater).

(i) Remove the tee 22G-230 from the hose 22G-240 and from the water heater 22G-060.

(j) Remove the hose 22G-240 from the tee 22G-220.

(k) Remove the hose 22G-260 from the tee 22G-220.

(l) Remove the tee 22G-220 from the shutoff valve 22G-200.

(m) Remove the screw 22G-280, the washer 22G-050, the spacer 22G-290 and the tube 22G-250 with the clamp 22G-270.

(n) Remove the tube 22G-250 from the shutoff valve 22G-200.

(o) Remove the ground cable from the water heater 22G-060.

(p) Remove the clamps 22G-030 with the water heater 22G-060 from the brackets 22G-020.

(q) Remove the screws 22G-040, the washers 22G-050 and the brackets 22G-020 from the lavatory structure.

(r) Remove the ground cable from the shutoff valve 22G-200.

(s) Remove the screws 22G-130, the washers 22G-050, the nuts 22G-140 and the bracket 22G-120 with the grommet 22G-110 from the shutoff valve rod 22G-100 and from the lavatory structure.

(t) Remove the screws 22G-130, the washers 22G-170 and the bracket 22G-160 with the retaining ring 22G-150, the grommet 22G-110, the shutoff valve rod 22G-100 and the shutoff valve bracket 22G-180 from the shutoff valve 22G-200 and from the lavatory structure.

(u) Remove the screws 22G-210 and the shutoff valve bracket 22G-180 from the shutoff valve 22G-200.

SUB TASK 25-41-51-040-067-B01

D2549010405400 D2549010606800 D2549010607000 D2549010607400
D2549010608600 D2549010609000 D2549010611600 D2549010612000
D2549010612200 D2549010613600 D2549010614800 D2549020402400
D2549020403000 D2549020404200 D2549020405800 D2549020406000

D2549020408800 D2549020512800 D2549020801000 D2549020802200
D2549020802800 D2549020804000 D2549020804200 D2549020814000
D2549030400400 D2549030400600 D2549030401200 D2549030402000
D2549030402600 D2549030402800 D2549030403400 D2549030404200
D2549030404600 D2549030405000 D2549030405200 D2549030406800
D2549030407800 D2549030409000 D2549030409800 D2549030410000
D2549030411600 D2549030414800 D2549030600200 D2549030605600
D2549030606800 D2549030608000 D2549030608200 D2549030609000
D2549030609800 D2549030612400 D2549030702000 D2549030702400
D2549030702800 R225401134-010 R225401134-012 R225401134-014 R225401134-030 R225401134-032 R225401134-034 R225401134-036 R225401134-038
R225401614-000 R225401618-000 R225401618-002 R225401691-002

2. Disassembly of the Potable Water System (22G-1)

NOTE: **See TABLE 3627 for the references for the replacement procedures of permanent installed parts.**

More data for bonded parts are given in column SEE REPAIR TASK. Use the data for the selection of the related repair solution.

IPL FIG. ITEM	COMPONENT PART NAME	IPL FIG. ITEM	REPLACEMENT PART NAME	SEE REPAIR TASK
22G-001 22G-180	Potable Water System Shutoff Valve Bracket	22G-190	Nut	Replacement of the Riveted Parts
22G-001	Potable Water System	22G-300	Insulation	Replacement of the Bonded Parts self adhesive
22G-001	Potable Water System	22G-310	Insulation	Replacement of the Bonded Parts self adhesive

Table 3627
Reference list for the replacement of permanent installed parts

(a) Disconnect the water faucet assembly 22G-010 from the water supply.

NOTE: **For further instructions, see CMMV 38-11-03_C3207 (water faucet assembly).**

(b) Remove the ground cable from the water faucet assembly 22G-010.

(c) Remove the screw 22G-090, the washer 22G-050, the spacer 22G-095 and the tubes of the water faucet assembly 22G-010 with the clamps 22G-080.

(d) Remove the tube of the water faucet assembly 22G-010 from the reducer elbow 22G-070.

(e) Remove the screw 22G-090, the washer 22G-050, the spacer 22G-095 and the tube of the water faucet assembly 22G-010 with the clamp 22G-080.

(f) Remove the tube of the water faucet assembly 22G-010 from the tee 22G-230.

(g) Remove the water faucet assembly 22G-010.

(h) Remove the reducer elbow 22G-070 from the water heater 22G-060.

NOTE: For further instructions, see CMMV 38-12-16_0AJJ0 (water heater).

(i) Remove the tee 22G-230 from the hose 22G-240 and from the water heater 22G-060.

(j) Remove the hose 22G-240 from the tee 22G-220.

(k) Remove the hose 22G-260 from the tee 22G-220.

(l) Remove the tee 22G-220 from the shutoff valve 22G-200.

(m) Remove the screw 22G-280, the washer 22G-050, the spacer 22G-290 and the tube 22G-250 with the clamp 22G-270.

(n) Remove the tube 22G-250 from the shutoff valve 22G-200.

(o) Remove the ground cable from the water heater 22G-060.

(p) Remove the clamps 22G-030 with the water heater 22G-060 from the brackets 22G-020.

(q) Remove the screws 22G-040, the washers 22G-050 and the brackets 22G-020 from the lavatory structure.

(r) Remove the ground cable from the shutoff valve 22G-200.

(s) Remove the screws 22G-130, the washers 22G-050, the nuts 22G-140 and the bracket 22G-120 with the grommet 22G-110 from the shutoff valve rod 22G-100 and from the lavatory structure.

(t) Remove the screws 22G-130, the washers 22G-170 and the bracket 22G-160 with the retaining ring 22G-150, the grommet 22G-110, the shutoff valve rod 22G-100 and the shutoff valve bracket 22G-180 from the shutoff valve 22G-200 and from the lavatory structure.

(u) Remove the screws 22G-320, the washers 22G-330 and the shutoff valve bracket 22G-180 from the shutoff valve 22G-200.

TASK 25-41-51-000-819-J01
D2549010404000 D2549010513600 D2549010601400 D2549010614400 D2549020402200 D2549020407200 D2549020510400 D2549020713800 D2549020805400 D2549030404000 D2549030412000 D2549030511000 D2549030512000 D2549030514800 D2549030613600

190. Disassembly of the Potable Water System

A. General

A complete disassembly of the component is not necessary and not recommended.

Do not disassemble the component more than it is necessary for:

- Cleaning
- Visual Inspection
- Replacement of defective parts.

B. Job Set-up Information

(1) Not applicable

C. Procedure

WARNING: BE CAREFUL WHEN YOU USE SOLVENTS/CLEANING AGENTS, SEALANTS AND OTHER MATERIALS. OBEY THE MATERIAL MANUFACTURER'S INSTRUCTIONS AND THE LOCAL REGULATIONS. MAKE SURE THAT THERE IS A GOOD FLOW OF AIR THROUGH THE WORK AREA. DO NOT BREATHE THE FUMES. DO NOT SMOKE. DO NOT USE THESE MATERIALS NEAR A FLAME, SPARKS OR SOURCES OF HEAT. USE PROTECTIVE CLOTHING, GOGGLES AND GLOVES. IF YOU GET ONE OF THESE MATERIALS ON YOUR SKIN OR IN YOUR EYES, FLUSH IT AWAY WITH A FLOW OF CLEAN WATER. IF YOU GET ONE OF THESE MATERIALS IN YOUR MOUTH, GET IMMEDIATE MEDICAL AID. IN GENERAL, THESE MATERIALS ARE POISONOUS, FLAMMABLE AND SKIN IRRITANTS.

CAUTION: DO ALL THE WORK ON A CLEAN, SOFT SURFACE TO PREVENT DAMAGE TO THE COMPONENTS.

SUB TASK 25-41-51-040-068-A01
D2549010513600 D2549010601400 D2549030511000 D2549030512000 D2549030514800

1. Disassembly of the Potable Water System (22H-1)

NOTE: **See TABLE 3628 for the references for the replacement procedures of permanent installed parts.**

More data for bonded parts are given in column SEE REPAIR TASK. Use the data for the selection of the related repair solution.

IPL FIG. ITEM	COMPONENT PART NAME	IPL FIG. ITEM	REPLACEMENT PART NAME	SEE REPAIR TASK
22H-001 22H-220	Potable Water System Shutoff Valve Bracket	22H-230	Nut	Replacement of the Riveted Parts
22H-001	Potable Water System	22H-340	Insulation	Replacement of the Bonded Parts self adhesive
22H-001	Potable Water System	22H-350	Insulation	Replacement of the Bonded Parts self adhesive

Table 3628
Reference list for the replacement of permanent installed parts

(a) Disconnect the infrared faucet assembly 22H-010 from the water supply and from the electrical supply.

NOTE: **For further instructions, see CMMV 38-20-20_80477 (infrared faucet assembly).**

(b) Remove the ground cable from the infrared faucet assembly 22H-010.

(c) Remove the screw 22H-020 and the infrared faucet assembly 22H-010.

(d) Remove the screws 22H-120, the washers 22H-060, the spacers 22H-110 and the hose 22H-090 with the clamps 22H-100.

(e) Remove the hose 22H-090 from the tee 22H-270 and from the valve of the infrared faucet assembly 22H-010.

(f) Remove the hose 22H-080 from the water heater 22H-070 and from the reducer elbow 22H-135.

NOTE: For further instructions, see CMMV 38-12-16_0AJJ0 (water heater).

(g) Remove the reducer elbow 22H-135 from the valve of the infrared faucet assembly 22H-010.

(h) Remove the screws 22H-050, the washers 22H-060, the nuts 22H-180 and the remaining parts of the infrared faucet assembly 22H-010.

(i) Remove the tee 22H-270 from the water heater 22H-070 and from the hose 22H-280.

(j) Remove the hose 22H-280 from the tee 22H-260.

(k) Remove the hose 22H-300 from the tee 22H-260.

(l) Remove the tee 22H-260 from the shutoff valve 22H-240.

(m) Remove the screw 22H-320, the washer 22H-060, the spacer 22H-330 and the tube 22H-290 with the clamp 22H-310.

(n) Remove the tube 22H-290 from the shutoff valve 22H-240.

(o) Remove the ground cable from the water heater 22H-070.

(p) Remove the clamps 22H-040 with the water heater 22H-070 from the brackets 22H-030.

(q) Remove the screws 22H-050, the washers 22H-060 and the brackets 22H-030 from the lavatory structure.

(r) Remove the screws 22H-050, the washers 22H-060 and the angle 22H-130 from the lavatory structure.

(s) Remove the ground cable from the shutoff valve 22H-240.

(t) Remove the screws 22H-170, the washers 22H-060, the nuts 22H-180 and the bracket 22H-160 with the grommet 22H-150 from the shutoff valve rod 22H-140 and from the lavatory structure.

(u) Remove the screws 22H-170, the washers 22H-210 and the bracket 22H-200 with the retaining ring 22H-190, the grommet 22H-150, the shutoff valve rod 22H-140 and the shutoff valve bracket 22H-220 from the shutoff valve 22H-240 and from the lavatory structure.

(v) Remove the screws 22H-250 and the shutoff valve bracket 22H-220 from the shutoff valve 22H-240.

SUB TASK 25-41-51-040-068-B01
D2549010404000 D2549010614400 D2549020402200 D2549020407200 D2549020510400 D2549020713800 D2549020805400 D2549030404000 D2549030412000 D2549030613600

2. Disassembly of the Potable Water System (22H-1)

NOTE: **See TABLE 3629 for the references for the replacement procedures of permanent installed parts.**

More data for bonded parts are given in column SEE REPAIR TASK. Use the data for the selection of the related repair solution.

IPL FIG. ITEM	COMPONENT PART NAME	IPL FIG. ITEM	REPLACEMENT PART NAME	SEE REPAIR TASK
22H-001 22H-220	Potable Water System Shutoff Valve Bracket	22H-230	Nut	Replacement of the Riveted Parts
22H-001	Potable Water System	22H-340	Insulation	Replacement of the Bonded Parts self adhesive
22H-001	Potable Water System	22H-350	Insulation	Replacement of the Bonded Parts self adhesive

Table 3629
Reference list for the replacement of permanent installed parts

(a) Disconnect the water faucet assembly 22H-010 from the water supply and from the electrical supply.

NOTE: For further instructions, see CMMV 38-20-20_80477 (water faucet assembly).

(b) Remove the ground cable from the water faucet assembly 22H-010.

(c) Remove the screw 22H-020 and the water faucet assembly 22H-010.

(d) Remove the screws 22H-120, the washers 22H-060, the spacers 22H-110 and the hose 22H-090 with the clamps 22H-100.

(e) Remove the hose 22H-090 from the tee 22H-270 and from the valve of the water faucet assembly 22H-010.

(f) Remove the hose 22H-080 from the water heater 22H-070 and from the reducer elbow 22H-135.

NOTE: For further instructions, see CMMV 38-12-16_0AJJ0 (water heater).

(g) Remove the reducer elbow 22H-135 from the valve of the water faucet assembly 22H-010.

(h) Remove the screws 22H-050, the washers 22H-060, the nuts 22H-180 and the remaining parts of the water faucet assembly 22H-010.

(i) Remove the tee 22H-270 from the water heater 22H-070 and from the hose 22H-280.

(j) Remove the hose 22H-280 from the tee 22H-260.

(k) Remove the hose 22H-300 from the tee 22H-260.

(l) Remove the tee 22H-260 from the shutoff valve 22H-240.

(m) Remove the screw 22H-320, the washer 22H-060, the spacer 22H-330 and the tube 22H-290 with the clamp 22H-310.

(n) Remove the tube 22H-290 from the shutoff valve 22H-240.

(o) Remove the ground cable from the water heater 22H-070.

(p) Remove the clamps 22H-040 with the water heater 22H-070 from the brackets 22H-030.

(q) Remove the screws 22H-050, the washers 22H-060 and the brackets 22H-030 from the lavatory structure.

(r) Remove the screws 22H-050, the washers 22H-060 and the angle 22H-130 from the lavatory structure.

(s) Remove the ground cable from the shutoff valve 22H-240.

(t) Remove the screws 22H-170, the washers 22H-060, the nuts 22H-180 and the bracket 22H-160 with the grommet 22H-150 from the shutoff valve rod 22H-140 and from the lavatory structure.

(u) Remove the screws 22H-170, the washers 22H-210 and the bracket 22H-200 with the retaining ring 22H-190, the grommet 22H-150, the shutoff valve rod 22H-140 and the shutoff valve bracket 22H-220 from the shutoff valve 22H-240 and from the lavatory structure.

(v) Remove the screws 22H-360, the washers 22H-370 and the shutoff valve bracket 22H-220 from the shutoff valve 22H-240.

TASK 25-41-51-000-819-K01
D2547161903000

191. Disassembly of the Potable Water System

A. General

A complete disassembly of the component is not necessary and not recommended.

Do not disassemble the component more than it is necessary for:

- Cleaning
- Visual Inspection
- Replacement of defective parts.

B. Job Set-up Information

(1) Not applicable

C. Procedure

WARNING: BE CAREFUL WHEN YOU USE SOLVENTS/CLEANING AGENTS, SEALANTS AND OTHER MATERIALS. OBEY THE MATERIAL MANUFACTURER'S INSTRUCTIONS AND THE LOCAL REGULATIONS. MAKE SURE THAT THERE IS A GOOD FLOW OF AIR THROUGH THE WORK AREA. DO NOT BREATHE THE FUMES. DO NOT SMOKE. DO NOT USE THESE MATERIALS NEAR A FLAME, SPARKS OR SOURCES OF HEAT. USE PROTECTIVE CLOTHING, GOGGLES AND GLOVES. IF YOU GET ONE OF THESE MATERIALS ON YOUR SKIN OR IN YOUR EYES, FLUSH IT AWAY WITH A FLOW OF CLEAN WATER. IF YOU GET ONE OF THESE MATERIALS IN YOUR MOUTH, GET IMMEDIATE MEDICAL AID. IN GENERAL, THESE MATERIALS ARE POISONOUS, FLAMMABLE AND SKIN IRRITANTS.

CAUTION: DO ALL THE WORK ON A CLEAN, SOFT SURFACE TO PREVENT DAMAGE TO THE COMPONENTS.

SUB TASK 25-41-51-040-069-A01

1. Disassembly of the Potable Water System (22J-1)

(a) Disconnect the water faucet assembly 22J-010 from the water supply.

NOTE: For further instructions, see CMMV 38-11-03_C3207 (water faucet assembly).

(b) Remove the ground cable from the water faucet assembly 22J-010.

(c) Remove the screw 22J-190, the washer 22J-050, the spacer 22J-210 and the tubes of the water faucet assembly 22J-010 with the clamps 22J-200.

(d) Remove the tube of the water faucet assembly 22J-010 from the reducer elbow 22J-070.

(e) Remove the screw 22J-220, the washer 22J-050, the spacer 22J-210 and the tube of the water faucet assembly 22J-010 with the clamp 22J-200.

(f) Remove the tube of the water faucet assembly 22J-010 from the tee 22J-080.

(g) Remove the water faucet assembly 22J-010.

(h) Remove the reducer elbow 22J-070 from the water heater 22J-020.

NOTE: For further instructions, see CMMV 38-12-16_0AJJ0 (water heater).

(i) Remove the hose 22J-100 from the tee 22J-120.

(j) Remove the tube 22J-090 from the tees 22J-080, 22J-120.

(k) Remove the tee 22J-120 from the shutoff valve 22J-130.

(l) Remove the tube 22J-110 from the shutoff valve 22J-130.

(m) Remove the tee 22J-080 from the water heater 22J-020.

(n) Remove the ground cable from the water heater 22J-020.

(o) Remove the clamps 22J-060 with the water heater 22J-020 from the brackets 22J-030.

(p) Remove the screws 22J-040, the washers 22J-050 and the brackets 22J-030 from the lavatory structure.

(q) Remove the ground cable from the shutoff valve 22J-130.

(r) Remove the screws 22J-140, 22J-230, the washers 22J-150, 22J-240, the lock washer 22J-250, the nuts 22J-160, 22J-260 and the shutoff valve 22J-130 from the bracket 22J-170.

(s) Remove the screws 22J-180, the washers 22J-050 and the bracket 22J-170 from the floor pan.

TASK 25-41-51-000-819-L01
D2549020712000 D2549020712600 D2549030610200 D2549030701200

192. Disassembly of the Potable Water System

A. General

A complete disassembly of the component is not necessary and not recommended.

Do not disassemble the component more than it is necessary for:

- Cleaning
- Visual Inspection
- Replacement of defective parts.

B. Job Set-up Information

(1) Not applicable

C. Procedure

WARNING: BE CAREFUL WHEN YOU USE SOLVENTS/CLEANING AGENTS, SEALANTS AND OTHER MATERIALS. OBEY THE MATERIAL MANUFACTURER'S INSTRUCTIONS AND THE LOCAL REGULATIONS. MAKE SURE THAT THERE IS A GOOD FLOW OF AIR THROUGH THE WORK AREA. DO NOT BREATHE THE FUMES. DO NOT SMOKE. DO NOT USE THESE MATERIALS NEAR A FLAME, SPARKS OR SOURCES OF HEAT. USE PROTECTIVE CLOTHING, GOGGLES AND GLOVES. IF YOU GET ONE OF THESE MATERIALS ON YOUR SKIN OR IN YOUR EYES, FLUSH IT AWAY WITH A FLOW OF CLEAN WATER. IF YOU GET ONE OF THESE MATERIALS IN YOUR MOUTH, GET IMMEDIATE MEDICAL AID. IN GENERAL, THESE MATERIALS ARE POISONOUS, FLAMMABLE AND SKIN IRRITANTS.

CAUTION: DO ALL THE WORK ON A CLEAN, SOFT SURFACE TO PREVENT DAMAGE TO THE COMPONENTS.

SUB TASK 25-41-51-040-128-A01
1. Disassembly of the Potable Water System (22K-1)

NOTE: **See TABLE 3630 for the references for the replacement procedures of permanent installed parts.**

More data for bonded parts are given in column SEE REPAIR TASK. Use the data for the selection of the related repair solution.

IPL FIG. ITEM	COMPONENT PART NAME	IPL FIG. ITEM	REPLACEMENT PART NAME	SEE REPAIR TASK
22K-001	Potable Water System	22K-130	Insulation	Replacement of the Bonded Parts self adhesive
22K-001	Potable Water System	22K-135	Insulation	Replacement of the Bonded Parts self adhesive
22K-001 22K-190	Potable Water System Cover Assembly	22K-200	Bumper	Replacement of the Bonded Parts self adhesive
22K-001 22K-310	Potable Water System Shutoff Valve Bracket	22K-320	Nut	Replacement of the Riveted Parts

Table 3630
Reference list for the replacement of permanent installed parts

(a) Disconnect the water faucet assembly 22K-010 from the water supply and from the electrical supply.

NOTE: **For further instructions, see CMMV 38-20-47_80477 (water faucet assembly).**

(b) Remove the ground cable from the water faucet assembly 22K-010.

(c) Remove the screws 22K-250, the washers 22K-280, the spacers 22K-230 and the tube of the water faucet assembly 22K-010 with the clamps 22K-220.

(d) Remove the screws 22K-240, the washers 22K-280 and the controller of the water faucet assembly 22K-010 from the lavatory structure.

(e) Remove the screws 22K-240, the washers 22K-280 and the cover assembly 22K-190 from the lavatory structure.

(f) Remove the screws 22K-240, the washers 22K-280 and the valve of the water faucet assembly 22K-010 from the lavatory structure.

(g) Remove the screws 22K-160, the washers 22K-170, the nuts 22K-180 and the water faucet assembly 22K-010.

(h) Remove the screws 22K-270, the washers 22K-280, the spacers 22K-070 and the hose 22K-150 with the clamps 22K-050.

(i) Remove the screw 22K-260, the washer 22K-280, the spacer 22K-070 and the hose 22K-150 with the clamp 22K-050.

(j) Remove the hose 22K-150 from the tee 22K-120 and from the reducer elbow 22K-040.

(k) Remove the hose 22K-140 from the reducer elbow 22K-040 and from the water heater 22K-020.

NOTE: For further instructions, see CMMV 38-12-16_0AJJ0 (water heater).

(l) Remove the reducer elbows 22K-040 from the valve of the water faucet assembly 22K-010.

(m) Remove the tee 22K-120 from the water heater 22K-020 and from the hose 22K-090.

(n) Remove the ground cable from the water heater 22K-020.

(o) Remove the clamps 22K-060 with the water heater 22K-020 from the brackets 22K-030.

(p) Remove the screws 22K-080, the washers 22K-280, the brackets 22K-030 and the spacers 22K-210 from the lavatory structure.

(q) Remove the hose 22K-090 from the tee 22K-380.

(r) Remove the hose 22K-100 from the tee 22K-380.

(s) Remove the screw 22K-270, the washer 22K-170, the spacer 22K-070 and the tube 22K-110 with the clamp 22K-055.

(t) Remove the tube 22K-110 from the shutoff valve 22K-290.

(u) Remove the tee 22K-380 from the shutoff valve 22K-290.

(v) Remove the ground cable from the shutoff valve 22K-290.

(w) Remove the screws 22K-400, the washers 22K-170 and the bracket 22K-350 with the grommet 22K-370 from the shutoff valve rod 22K-360 and from the lavatory structure.

(x) Remove the screws 22K-400, the washers 22K-300 and the bracket 22K-340 with the retaining ring 22K-390, the grommet 22K-370, the shutoff valve rod 22K-360 and the shutoff valve bracket 22K-310 from the shutoff valve 22K-290.

(y) Remove the screws 22K-410, the washers 22K-420 and the shutoff valve bracket 22K-310 from the shutoff valve 22K-290.

TASK 25-41-51-000-820-A01

D2549010500000 D2549010500400 D2549010500600 D2549010500800 D2549010501000 D2549010501200 D2549010501400 D2549010501600 D2549010501800 D2549010502000 D2549010502200 D2549010502600 D2549010502800 D2549010503200 D2549010503400 D2549010503600 D2549010503800 D2549010504200 D2549010504400 D2549010504600 D2549010504800 D2549010505000 D2549010505200 D2549010505400 D2549010505800 D2549010506000 D2549010506200 D2549010506400 D2549010507000 D2549010507200 D2549010507400 D2549010507600 D2549010508200 D2549010508400 D2549010508600 D2549010508800 D2549010509000 D2549010509200 D2549010511200 D2549020500000 D2549020500200 D2549020500400 D2549020500600 D2549020500800 D2549020501000 D2549020501200 D2549020501400 D2549020501600 D2549020501800 D2549020502000 D2549020502400 D2549020502600 D2549020502800 D2549020503000 D2549020503200 D2549020503400 D2549020503600 D2549020503800 D2549020504000 D2549020504200 D2549020504400 D2549020504600 D2549020504800 D2549020505000 D2549020505200 D2549020505400 D2549020505800 D2549020506000 D2549020600000 D2549020600200 D2549020600800 D2549020601000 D2549020601200 D2549020601400 D2549020601600 D2549020601800 D2549020602000 D2549020602400 D2549020602600 D2549020602800 D2549020603200 D2549020603400 D2549020603800 D2549020606600 D2549020607200 D2549030500200 D2549030500400 D2549030500600 D2549030500800 D2549030501000 D2549030501200 D2549030501400 D2549030501600 D2549030501800 D2549030502000 D2549030502200 D2549030502400 D2549030502600 D2549030502800 D2549030503000 D2549030503200 D2549030503400 D2549030503600 R225401107-000 R225401107-002 R225401115-002 R225401133-000 R225401134-000 R225401139-000 R225401145-000 R225401146-000 R225401146-002 R225401188-000 R225401188-002 R225401188-004 R225401188-006

193. Disassembly of the Waste Water System

A. General

A complete disassembly of the component is not necessary and not recommended.

Do not disassemble the component more than it is necessary for:

- Cleaning
- Visual Inspection
- Replacement of defective parts.

B. Job Set-up Information

(1) Not applicable

C. Procedure

WARNING: **BE CAREFUL WHEN YOU USE SOLVENTS/CLEANING AGENTS, SEALANTS AND OTHER MATERIALS. OBEY THE MATERIAL MANUFACTURER'S INSTRUCTIONS AND THE LOCAL REGULATIONS. MAKE SURE THAT THERE IS A GOOD FLOW OF AIR THROUGH THE WORK AREA. DO NOT BREATHE THE FUMES. DO NOT SMOKE. DO NOT USE THESE MATERIALS NEAR A FLAME, SPARKS OR SOURCES OF HEAT. USE PROTECTIVE CLOTHING, GOGGLES AND GLOVES. IF YOU GET ONE OF THESE MATERIALS ON YOUR SKIN OR IN YOUR EYES, FLUSH IT AWAY WITH A FLOW OF CLEAN WATER. IF YOU GET ONE OF THESE MATERIALS IN YOUR MOUTH, GET IMMEDIATE MEDICAL AID. IN GENERAL, THESE MATERIALS ARE POISONOUS, FLAMMABLE AND SKIN IRRITANTS.**

CAUTION: **DO ALL THE WORK ON A CLEAN, SOFT SURFACE TO PREVENT DAMAGE TO THE COMPONENTS.**

SUB TASK 25-41-51-040-070-A01
D2549020602800 R225401134-000

1. Disassembly of the Waste Water System (23-1)

NOTE: **See TABLE 3631 for the references for the replacement procedures of permanent installed parts.**

More data for bonded parts are given in column SEE REPAIR TASK. Use the data for the selection of the related repair solution.

IPL FIG. ITEM	COMPONENT PART NAME	IPL FIG. ITEM	REPLACEMENT PART NAME	SEE REPAIR TASK
23-001	Waste Water System	23-270	Insulation	Replacement of the Bonded Parts self adhesive
23-001	Waste Water System	23-280	Insulation	Replacement of the Bonded Parts self adhesive

Table 3631
Reference list for the replacement of permanent installed parts

(a) Remove the screws 23-033, the washers 23-035 and the piece of the drain assembly 23-010.

(b) Remove the clamps 23-030, 23-031 and the hose 23-020 from the drain assembly 23-010 and from the lavatory structure.

NOTE: For further instructions, see CMMV 38-30-09_C3406 (drain assembly).

(c) Remove the screw 23-070, the washers 23-130, the nut 23-110, the clamp 23-160, the spacer 23-230 and the hose 23-040 from the lavatory structure.

(d) Remove the clamps 23-030 and the hose 23-040 from the drain assembly 23-010 and from the drain valve 23-090.

NOTE: For further instructions, see CMMV 38-30-02_91816 (drain valve).

(e) Remove the drain assembly 23-010 from the lavatory structure.

(f) Remove the clamps 23-030 and the tube 23-190 from the lavatory structure.

(g) Remove the screws 23-260, the washers 23-130, the clamps 23-050, the spacers 23-200 and the tube 23-190 from the lavatory structure.

(h) Remove the clamps 23-030 and the hose 23-180 from the tube 23-190 and from the drain valve 23-090.

(i) Remove the ground cable from the drain valve 23-090.

(j) Remove the screws 23-140, the washers 23-150, the nuts 23-080 and the drain valve 23-090 from the bracket 23-100.

(k) Remove the screws 23-120, the washers 23-130, the nuts 23-110 and the bracket 23-100 from the lavatory structure.

SUB TASK 25-41-51-040-070-B01
D2549020603200 D2549030502600 D2549030503400 R225401188-006

2. Disassembly of the Waste Water System (23-1)

(a) Remove the screws 23-033, the washers 23-035 and the piece of the drain assembly 23-010.

(b) Remove the clamps 23-030, 23-031 and the hose 23-020 from the drain assembly 23-010 and from the lavatory structure.

NOTE: For further instructions, see CMMV 38-30-09_C3406 (drain assembly).

(c) Remove the screw 23-070, the washers 23-130, the nut 23-110, the clamp 23-160, the spacer 23-230 and the hose 23-040 from the lavatory structure.

(d) Remove the clamps 23-030 and the hose 23-040 from the drain assembly 23-010 and from the drain valve 23-090.

NOTE: For further instructions, see CMMV 38-30-02_91816 (drain valve).

(e) Remove the drain assembly 23-010 from the lavatory structure.

(f) Remove the clamps 23-030 and the tube 23-190 from the lavatory structure.

(g) Remove the screws 23-260, the washers 23-130, the clamps 23-050, the spacers 23-200 and the tube 23-190 from the lavatory structure.

(h) Remove the clamps 23-030 and the hose 23-180 from the tube 23-190 and from the drain valve 23-090.

(i) Remove the ground cable from the drain valve 23-090.

(j) Remove the screws 23-140, the washers 23-150, the nuts 23-080, the spacers 23-141 and the drain valve 23-090 from the bracket 23-100.

(k) Remove the screws 23-120, the washers 23-130, 23-132, the nuts 23-110 and the bracket 23-100 from the lavatory structure.

SUB TASK 25-41-51-040-070-C01
D2549020504000 D2549020603400 D2549030500800 D2549030502000 D2549030502800 R225401188-004

3. Disassembly of the Waste Water System (23-1)

NOTE: **See TABLE 3632 for the references for the replacement procedures of permanent installed parts.**

More data for bonded parts are given in column SEE REPAIR TASK. Use the data for the selection of the related repair solution.

IPL FIG. ITEM	COMPONENT PART NAME	IPL FIG. ITEM	REPLACEMENT PART NAME	SEE REPAIR TASK
23-001	Waste Water System	23-270	Insulation	Replacement of the Bonded Parts self adhesive
23-001	Waste Water System	23-280	Insulation	Replacement of the Bonded Parts self adhesive

Table 3632
Reference list for the replacement of permanent installed parts

(a) Remove the clamps 23-030, 23-031 and the hose 23-020 from the drain assembly 23-010 and from the lavatory structure.

NOTE: **For further instructions, see CMMV 38-30-02_C3406 (drain assembly).**

(b) Remove the screw 23-070, the washers 23-130, the nut 23-110, the clamp 23-160, the spacer 23-230 and the hose 23-040 from the lavatory structure.

(c) Remove the clamps 23-030 and the hose 23-040 from the drain assembly 23-010 and from the drain valve 23-090.

NOTE: **For further instructions, see CMMV 38-30-02_91816 (drain valve).**

(d) Remove the drain assembly 23-010 from the lavatory structure.

(e) Remove the clamps 23-030 and the tube 23-190 from the lavatory structure.

(f) Remove the screws 23-260, the washers 23-130, the clamps 23-050, the spacers 23-200 and the tube 23-190 from the lavatory structure.

(g) Remove the clamps 23-030 and the hose 23-180 from the tube 23-190 and from the drain valve 23-090.

(h) Remove the ground cable from the drain valve 23-090.

(i) Remove the screws 23-140, the washers 23-150, the nuts 23-080 and the drain valve 23-090 from the bracket 23-100.

(j) Remove the screws 23-120, the washers 23-130, the nuts 23-110 and the bracket 23-100 from the lavatory structure.

SUB TASK 25-41-51-040-070-D01
D2549020601400 D2549020601600 R225401133-000

4. Disassembly of the Waste Water System (23-1)

NOTE: **See TABLE 3633 for the references for the replacement procedures of permanent installed parts.**

More data for bonded parts are given in column SEE REPAIR TASK. Use the data for the selection of the related repair solution.

IPL FIG. ITEM	COMPONENT PART NAME	IPL FIG. ITEM	REPLACEMENT PART NAME	SEE REPAIR TASK
23-001	Waste Water System	23-270	Insulation	Replacement of the Bonded Parts self adhesive

Table 3633
Reference list for the replacement of permanent installed parts

(a) Remove the clamps 23-030, 23-031 and the hose 23-020 from the drain assembly 23-010 and from the lavatory structure.

NOTE: **For further instructions, see CMMV 38-30-02_C3406 (drain assembly).**

(b) Remove the screw 23-070, the washers 23-130, the nut 23-110, the clamp 23-160, the spacer 23-230 and the hose 23-040 from the lavatory structure.

(c) Remove the clamps 23-030 and the hose 23-040 from the drain assembly 23-010 and from the drain valve 23-090.

NOTE: **For further instructions, see CMMV 38-30-02_91816 (drain valve).**

(d) Remove the drain assembly 23-010 from the lavatory structure.

(e) Remove the clamps 23-030 and the tube 23-190 from the lavatory structure.

(f) Remove the screws 23-260, the washers 23-130, the clamps 23-050, the spacers 23-200 and the tube 23-190 from the lavatory structure.

(g) Remove the clamps 23-030 and the hose 23-180 from the tube 23-190 and from the drain valve 23-090.

(h) Remove the ground cable from the drain valve 23-090.

(i) Remove the screws 23-140, the washers 23-150, the nuts 23-080 and the drain valve 23-090 from the bracket 23-100.

(j) Remove the screws 23-120, the washers 23-130, the nuts 23-110 and the bracket 23-100 from the lavatory structure.

SUB TASK 25-41-51-040-070-E01

D2549010500000 D2549010500400 D2549010500600 D2549010500800 D2549010501000 D2549010501200 D2549010501400 D2549010501600 D2549010501800 D2549010502000 D2549010502200 D2549010502600 D2549010502800 D2549010503200 D2549010503400 D2549010503600 D2549010503800 D2549010504200 D2549010504400 D2549010504600 D2549010504800 D2549010505000 D2549010505200 D2549010505400 D2549010505800 D2549010506000 D2549010506200 D2549010506400 D2549010507000 D2549010507200 D2549010507400 D2549010507600 D2549010508200 D2549010508400 D2549010508600 D2549010508800 D2549010509000 D2549010509200 D2549010511200 D2549020500000 D2549020500200 D2549020500400 D2549020500600 D2549020500800 D2549020501000 D2549020501200 D2549020501400 D2549020501600 D2549020501800 D2549020502000 D2549020502400 D2549020502600 D2549020502800 D2549020503000 D2549020503200 D2549020503400 D2549020503600 D2549020503800 D2549020504200 D2549020504400 D2549020504600 D2549020504800 D2549020505000 D2549020505200 D2549020505400 D2549020505800 D2549020506000 D2549020600000 D2549020600200 D2549020600800 D2549020601000 D2549020601200 D2549020601800 D2549020602000 D2549020602400 D2549020602600 D2549020603800 D2549020606600 D2549020607200 D2549030500200 D2549030500400 D2549030500600 D2549030501000 D2549030501200 D2549030501400 D2549030501600 D2549030501800 D2549030502200 D2549030502400 D2549030503000 D2549030503200 D2549030503600 R225401107-000 R225401107-002 R225401115-002 R225401139-000 R225401145-000 R225401146-000 R225401146-002 R225401188-000 R225401188-002

5. Disassembly of the Waste Water System (23-1)

(a) Remove the clamps 23-030, 23-031 and the hose 23-020 from the drain assembly 23-010 and from the lavatory structure.

NOTE: For further instructions, see CMMV 38-30-02_C3406 (drain assembly).

(b) Remove the screw 23-070, the washers 23-130, the nut 23-110, the clamp 23-160, the spacer 23-230 and the hose 23-040 from the lavatory structure.

(c) Remove the clamps 23-030 and the hose 23-040 from the drain assembly 23-010 and from the drain valve 23-090.

NOTE: For further instructions, see CMMV 38-30-02_91816 (drain valve).

(d) Remove the drain assembly 23-010 from the lavatory structure.

(e) Remove the clamps 23-030 and the tube 23-190 from the lavatory structure.

(f) Remove the screws 23-260, the washers 23-130, the clamps 23-050, the spacers 23-200 and the tube 23-190 from the lavatory structure.

(g) Remove the clamps 23-030 and the hose 23-180 from the tube 23-190 and from the drain valve 23-090.

(h) Remove the ground cable from the drain valve 23-090.

(i) Remove the screws 23-140, the washers 23-150, the nuts 23-080 and the drain valve 23-090 from the bracket 23-100.

(j) Remove the screws 23-120, the washers 23-130, the nuts 23-110 and the bracket 23-100 from the lavatory structure.

TASK 25-41-51-000-820-B01
D2549010508000

194. Disassembly of the Waste Water System

A. General

A complete disassembly of the component is not necessary and not recommended.

Do not disassemble the component more than it is necessary for:

- Cleaning
- Visual Inspection
- Replacement of defective parts.

B. Job Set-up Information

(1) Not applicable

C. Procedure

WARNING: BE CAREFUL WHEN YOU USE SOLVENTS/CLEANING AGENTS, SEALANTS AND OTHER MATERIALS. OBEY THE MATERIAL MANUFACTURER'S INSTRUCTIONS AND THE LOCAL REGULATIONS. MAKE SURE THAT THERE IS A GOOD FLOW OF AIR THROUGH THE WORK AREA. DO NOT BREATHE THE FUMES. DO NOT SMOKE. DO NOT USE THESE MATERIALS NEAR A FLAME, SPARKS OR SOURCES OF HEAT. USE PROTECTIVE CLOTHING, GOGGLES AND GLOVES. IF YOU GET ONE OF THESE MATERIALS ON YOUR SKIN OR IN YOUR EYES, FLUSH IT AWAY WITH A FLOW OF CLEAN WATER. IF YOU GET ONE OF THESE MATERIALS IN YOUR MOUTH, GET IMMEDIATE MEDICAL AID. IN GENERAL, THESE MATERIALS ARE POISONOUS, FLAMMABLE AND SKIN IRRITANTS.

CAUTION: DO ALL THE WORK ON A CLEAN, SOFT SURFACE TO PREVENT DAMAGE TO THE COMPONENTS.

SUB TASK 25-41-51-040-071-A01

1. Disassembly of the Waste Water System (23A-1)

(a) Remove the clamps 23A-030 and the hose 23A-020 from the drain assembly 23A-010 and from the lavatory structure.

NOTE: For further instructions, see CMMV 38-30-02_C3406 (drain assembly).

(b) Remove the screw 23A-160, the washer 23A-200, the nut 23A-150, the clamp 23A-080, the spacer 23A-070 and the hose 23A-040 from the lavatory structure.

(c) Remove the clamps 23A-030 and the hose 23A-040 from the drain assembly 23A-010 and from the drain valve 23A-100.

NOTE: For further instructions, see CMMV 38-30-02_91816 (drain valve).

(d) Remove the drain assembly 23A-010 from the lavatory structure.

(e) Remove the clamps 23A-030 and the tube 23A-180 from the lavatory structure.

(f) Remove the screws 23A-190, the washers 23A-200, the clamps 23A-050, the spacers 23A-060 and the tube 23A-180 from the lavatory structure.

(g) Remove the clamps 23A-030 and the hose 23A-170 from the tube 23A-180 and from the drain valve 23A-100.

(h) Remove the ground cable from the drain valve 23A-100.

(i) Remove the screws 23A-110, the washers 23A-120, the nuts 23A-090 and the drain valve 23A-100 from the bracket 23A-130.

(j) Remove the screws 23A-140, the washers 23A-200, the nuts 23A-150 and the bracket 23A-130 from the lavatory structure.

TASK 25-41-51-000-820-C01

D2547160900200 D2547160900400 D2549010400000 D2549010400200 D2549010400400
D2549010400600 D2549010400800 D2549010401000 D2549010401400 D2549010402200
D2549010402400 D2549010402600 D2549010402800 D2549010403000 D2549010403200
D2549010403600 D2549010404400 D2549010404600 D2549010404800 D2549010405000
D2549010405200 D2549010405400 D2549010405600 D2549010405800 D2549010406000
D2549010406200 D2549010406400 D2549010406800 D2549010407000 D2549010509400
D2549010509600 D2549010509800 D2549010510000 D2549010510200 D2549010510400
D2549010510600 D2549010510800 D2549010511000 D2549010511400 D2549010511600
D2549010511800 D2549010512000 D2549010512200 D2549010512400 D2549010512600
D2549010513000 D2549010513200 D2549010513400 D2549010513600 D2549010513800
D2549010514000 D2549010514200 D2549010514400 D2549010514600 D2549010514800
D2549010600000 D2549010600200 D2549010600400 D2549010600600 D2549010600800
D2549010601000 D2549010601200 D2549010601400 D2549010601600 D2549010601800
D2549010602000 D2549010602200 D2549010602400 D2549010602600 D2549010602800
D2549010603000 D2549010603200 D2549010603400 D2549010603600 D2549010603800
D2549010604000 D2549010604200 D2549010604400 D2549010604600 D2549010604800
D2549010605000 D2549010605200 D2549010605600 D2549010605800 D2549010606000
D2549010606200 D2549010606400 D2549010606600 D2549010606800 D2549010607000
D2549010607200 D2549010607400 D2549010607600 D2549010607800 D2549010608200
D2549010608400 D2549010608600 D2549010608800 D2549010609000 D2549010609200
D2549010609400 D2549010609600 D2549010609800 D2549010610000 D2549010610200
D2549010610600 D2549010610800 D2549010611000 D2549010611200 D2549010611400
D2549010611600 D2549010611800 D2549010612000 D2549010612200 D2549010612400
D2549010612600 D2549010613200 D2549010613400 D2549010613600 D2549010613800
D2549010614200 D2549010614400 D2549010614800 D2549020300000 D2549020300400
D2549020300600 D2549020300800 D2549020301000 D2549020301600 D2549020301800
D2549020302800 D2549020400000 D2549020400400 D2549020400600 D2549020400800
D2549020401000 D2549020401200 D2549020401600 D2549020402000 D2549020402200
D2549020402400 D2549020403000 D2549020403200 D2549020403800 D2549020404000
D2549020404200 D2549020404400 D2549020404800 D2549020405000 D2549020405200
D2549020405400 D2549020405600 D2549020405800 D2549020406000 D2549020406200
D2549020406400 D2549020407000 D2549020407200 D2549020407400 D2549020407600
D2549020407800 D2549020408200 D2549020408800 D2549020409000 D2549020409600
D2549020410200 D2549020410800 D2549020411000 D2549020411200 D2549020411400
D2549020411600 D2549020412400 D2549020412800 D2549020413400 D2549020413600
D2549020413800 D2549020414000 D2549020414200 D2549020414600 D2549020414800
D2549020502200 D2549020505600 D2549020506200 D2549020506400 D2549020506600
D2549020506800 D2549020507000 D2549020507200 D2549020507400 D2549020507600
D2549020507800 D2549020508000 D2549020508200 D2549020508400 D2549020508600
D2549020508800 D2549020509000 D2549020509200 D2549020509600 D2549020509800
D2549020510000 D2549020510400 D2549020510600 D2549020510800 D2549020511000
D2549020511200 D2549020511600 D2549020511800 D2549020512200 D2549020512400
D2549020512600 D2549020512800 D2549020513000 D2549020513200 D2549020513400
D2549020513800 D2549020514000 D2549020514200 D2549020514400 D2549020514600
D2549020514800 D2549020602200 D2549020604200 D2549020604400 D2549020604600
D2549020604800 D2549020605000 D2549020605200 D2549020605400 D2549020605600

D2549020605800 D2549020606000 D2549020606800 D2549020607000 D2549020607400
D2549020607600 D2549020607800 D2549020608200 D2549020608400 D2549020608600
D2549020608800 D2549020609000 D2549020609200 D2549020609400 D2549020609600
D2549020609800 D2549020610000 D2549020610200 D2549020610400 D2549020610600
D2549020610800 D2549020611000 D2549020611200 D2549020611400 D2549020611600
D2549020611800 D2549020612000 D2549020612200 D2549020612400 D2549020612600
D2549020612800 D2549020613000 D2549020613200 D2549020613600 D2549020613800
D2549020614000 D2549020614400 D2549020614600 D2549020614800 D2549020700000
D2549020700200 D2549020700400 D2549020700600 D2549020700800 D2549020701000
D2549020701200 D2549020701400 D2549020701600 D2549020701800 D2549020702000
D2549020702200 D2549020702400 D2549020702600 D2549020702800 D2549020703200
D2549020703400 D2549020703600 D2549020703800 D2549020704000 D2549020704200
D2549020704400 D2549020704600 D2549020704800 D2549020705000 D2549020705200
D2549020705400 D2549020705600 D2549020705800 D2549020706000 D2549020706200
D2549020706400 D2549020706600 D2549020706800 D2549020707000 D2549020707200
D2549020707400 D2549020707600 D2549020707800 D2549020708000 D2549020708200
D2549020708400 D2549020708600 D2549020708800 D2549020709000 D2549020709200
D2549020709400 D2549020709600 D2549020709800 D2549020710000 D2549020710200
D2549020710400 D2549020710600 D2549020710800 D2549020711000 D2549020711200
D2549020711400 D2549020711600 D2549020712200 D2549020712400 D2549020712800
D2549020713000 D2549020713200 D2549020713400 D2549020713600 D2549020713800
D2549020714000 D2549020714400 D2549020714600 D2549020800000 D2549020800200
D2549020800400 D2549020800600 D2549020801000 D2549020801200 D2549020801400
D2549020801600 D2549020802000 D2549020802200 D2549020802400 D2549020802600
D2549020802800 D2549020803000 D2549020803200 D2549020803400 D2549020803600
D2549020803800 D2549020804000 D2549020804200 D2549020804800 D2549020805000
D2549020805200 D2549020805400 D2549020805600 D2549020805800 D2549020806000
D2549020806200 D2549020806400 D2549020806600 D2549020806800 D2549020807200
D2549020807400 D2549020807600 D2549020807800 D2549020808400 D2549020808600
D2549020808800 D2549020809000 D2549020809400 D2549020809600 D2549020809800
D2549020810200 D2549020810800 D2549020811200 D2549020811600 D2549020811800
D2549020812000 D2549020812200 D2549020812800 D2549020813000 D2549020813200
D2549020813800 D2549020814000 D2549020814200 D2549020814400 D2549030400000
D2549030400200 D2549030400400 D2549030400600 D2549030401200 D2549030401400
D2549030401600 D2549030401800 D2549030402000 D2549030402200 D2549030402400
D2549030402600 D2549030402800 D2549030403000 D2549030403400 D2549030403600
D2549030403800 D2549030404000 D2549030404200 D2549030404400 D2549030404600
D2549030404800 D2549030405000 D2549030405200 D2549030405400 D2549030405600
D2549030405800 D2549030406400 D2549030406600 D2549030406800 D2549030407000
D2549030407200 D2549030407600 D2549030407800 D2549030408200 D2549030408400
D2549030408600 D2549030409000 D2549030409200 D2549030409400 D2549030409800
D2549030410000 D2549030410200 D2549030410400 D2549030411400 D2549030411600
D2549030411800 D2549030412200 D2549030413400 D2549030414000 D2549030414400
D2549030414600 D2549030414800 D2549030503800 D2549030504000 D2549030504200
D2549030504600 D2549030504800 D2549030505200 D2549030505400 D2549030505600
D2549030505800 D2549030506000 D2549030506200 D2549030506400 D2549030506600
D2549030506800 D2549030507000 D2549030507200 D2549030507400 D2549030507600

D2549030507800 D2549030508000 D2549030508200 D2549030508400 D2549030508600
D2549030508800 D2549030509000 D2549030509200 D2549030509400 D2549030509600
D2549030509800 D2549030510000 D2549030510200 D2549030510400 D2549030510600
D2549030510800 D2549030511000 D2549030511200 D2549030511400 D2549030511600
D2549030511800 D2549030512000 D2549030512200 D2549030512400 D2549030512800
D2549030513000 D2549030513200 D2549030513400 D2549030513600 D2549030513800
D2549030514000 D2549030514200 D2549030514400 D2549030514600 D2549030514800
D2549030600000 D2549030600200 D2549030600400 D2549030600600 D2549030600800
D2549030601000 D2549030601200 D2549030601400 D2549030601600 D2549030601800
D2549030602000 D2549030602200 D2549030602400 D2549030602600 D2549030602800
D2549030603000 D2549030603200 D2549030603400 D2549030603600 D2549030603800
D2549030604200 D2549030604400 D2549030604600 D2549030604800 D2549030605000
D2549030605200 D2549030605400 D2549030605600 D2549030605800 D2549030606000
D2549030606200 D2549030606400 D2549030606600 D2549030606800 D2549030607000
D2549030607200 D2549030607400 D2549030607600 D2549030607800 D2549030608000
D2549030608200 D2549030608400 D2549030608600 D2549030608800 D2549030609000
D2549030609200 D2549030609800 D2549030610000 D2549030610200 D2549030610600
D2549030611000 D2549030611200 D2549030611400 D2549030611600 D2549030611800
D2549030612000 D2549030612200 D2549030612400 D2549030612600 D2549030612800
D2549030613200 D2549030613400 D2549030613600 D2549030613800 D2549030614000
D2549030614200 D2549030614400 D2549030614800 D2549030700000 D2549030700200
D2549030700400 D2549030700600 D2549030700800 D2549030701000 D2549030702200
D2549030702400 D2549030702600 D2549030702800 D2549030703000 D2549030703200
D2549030703400 D2549030703600 D2549030703800 D2549030704000 D2549030704400
D2549030704600 D2549030704800 D2549040500200 D2549040500400 D2549040500800
D2549040501000 D2549040501400 D2549040501800 D2549040502000 R225401107-004
R225401115-000 R225401134-002 R225401134-004 R225401134-006 R225401134-008
R225401134-010 R225401134-012 R225401134-014 R225401134-016 R225401134-018
R225401134-020 R225401134-022 R225401134-024 R225401134-026 R225401134-028
R225401134-030 R225401134-032 R225401134-034 R225401134-036 R225401134-038
R225401136-000 R225401136-004 R225401136-006 R225401136-008 R225401136-010
R225401136-014 R225401136-016 R225401136-018 R225401136-020 R225401136-022
R225401137-000 R225401137-002 R225401137-004 R225401137-006 R225401137-008
R225401137-010 R225401137-012 R225401137-014 R225401137-016 R225401142-000
R225401142-002 R225401145-002 R225401145-004 R225401145-006 R225401145-008
R225401145-010 R225401145-012 R225401145-014 R225401152-000 R225401152-002
R225401152-004 R225401152-006 R225401152-008 R225401152-010 R225401153-000
R225401159-000 R225401160-000 R225401160-002 R225401168-000 R225401168-002
R225401168-004 R225401168-006 R225401168-008 R225401168-010 R225401168-012
R225401168-014 R225401168-016 R225401168-018 R225401168-020 R225401168-022
R225401168-024 R225401168-026 R225401168-028 R225401172-000 R225401172-002
R225401172-004 R225401172-006 R225401172-008 R225401172-010 R225401172-012
R225401172-014 R225401172-016 R225401172-018 R225401175-000 R225401175-002
R225401176-000 R225401183-000 R225401183-002 R225401183-004 R225401183-006
R225401183-008 R225401192-000 R225401192-002 R225401195-000 R225401196-000
R225401196-002 R225401196-004 R225401196-006 R225401196-008 R225401196-010
R225401196-012 R225401196-014 R225401196-016 R225401196-020 R225401196-022

R225401196-024 R225401196-034 R225401196-038 R225401196-040 R225401196-042
R225401196-044 R225401196-046 R225401196-048 R225401196-050 R225401196-052
R225401196-054 R225401196-056 R225401196-058 R225401196-060 R225401196-062
R225401196-066 R225401196-068 R225401196-070 R225401199-000 R225401199-002
R225401199-004 R225401199-006 R225401199-008 R225401600-000 R225401600-002
R225401600-004 R225401603-000 R225401605-000 R225401605-002 R225401611-006
R225401611-008 R225401611-010 R225401611-012 R225401611-018 R225401613-000
R225401614-000 R225401618-000 R225401618-002 R225401619-000 R225401619-002
R225401622-000 R225401622-002 R225401624-000 R225401625-000 R225401627-004
R225401629-000 R225401629-002 R225401639-000 R225401639-002 R225401643-000
R225401643-002 R225401648-000 R225401648-002 R225401648-004 R225401648-008
R225401649-000 R225401656-000 R225401656-002 R225401662-002 R225401671-000
R225401671-002 R225401673-002 R225401673-004 R225401673-006 R225401675-000
R225401676-000 R225401683-000 R225401685-000 R225401685-002 R225401691-002
R225401693-000 R225401697-000 R225401697-002 R225401803-000 R225401803-002
R225401811-000 R225401814-000

195. Disassembly of the Waste Water System

A. General

A complete disassembly of the component is not necessary and not recommended.

Do not disassemble the component more than it is necessary for:

- Cleaning
- Visual Inspection
- Replacement of defective parts.

B. Job Set-up Information

(1) Not applicable

C. Procedure

WARNING: **BE CAREFUL WHEN YOU USE SOLVENTS/CLEANING AGENTS, SEALANTS AND OTHER MATERIALS. OBEY THE MATERIAL MANUFACTURER'S INSTRUCTIONS AND THE LOCAL REGULATIONS. MAKE SURE THAT THERE IS A GOOD FLOW OF AIR THROUGH THE WORK AREA. DO NOT BREATHE THE FUMES. DO NOT SMOKE. DO NOT USE THESE MATERIALS NEAR A FLAME, SPARKS OR SOURCES OF HEAT. USE PROTECTIVE CLOTHING, GOGGLES AND GLOVES. IF YOU GET ONE OF THESE MATERIALS ON YOUR SKIN OR IN YOUR EYES, FLUSH IT AWAY WITH A FLOW OF CLEAN WATER. IF YOU GET ONE OF THESE MATERIALS IN YOUR MOUTH, GET IMMEDIATE MEDICAL AID. IN GENERAL, THESE MATERIALS ARE POISONOUS, FLAMMABLE AND SKIN IRRITANTS.**

CAUTION: **DO ALL THE WORK ON A CLEAN, SOFT SURFACE TO PREVENT DAMAGE TO THE COMPONENTS.**

SUB TASK 25-41-51-040-072-A01
D2549010514000

1. Disassembly of the Waste Water System (23B-1)

NOTE: **See TABLE 3634 for the references for the replacement procedures of permanent installed parts.**

More data for bonded parts are given in column SEE REPAIR TASK. Use the data for the selection of the related repair solution.

IPL FIG. ITEM	COMPONENT PART NAME	IPL FIG. ITEM	REPLACEMENT PART NAME	SEE REPAIR TASK
23B-001	Waste Water System	23B-220	Insulation	Replacement of the Bonded Parts self adhesive

Table 3634
Reference list for the replacement of permanent installed parts

(a) Remove the clamps 23B-030 and the hose 23B-020 from the drain assembly 23B-010, from the lavatory structure and from the drain valve 23B-040.

NOTE: **For further instructions, see CMMV 38-31-14_58568 (drain assembly).**

(b) Remove the drain assembly 23B-010 from the lavatory structure.

(c) Remove the screws 23B-210, the washers 23B-175, the clamps 23B-135, the spacers 23B-151 and the hose 23B-120 from the lavatory structure.

(d) Remove the clamps 23B-030 and the hose 23B-120 from the drain valve 23B-040 and from the lavatory structure.

NOTE: For further instructions, see CMMV 38-30-30_U9084 (drain valve).

(e) Remove the ground cable from the drain valve 23B-040.

(f) Remove the screws 23B-090, the washers 23B-100, the nuts 23B-110 and the drain valve 23B-040 from the bracket 23B-050.

(g) Remove the screws 23B-060, the washers 23B-070, the nuts 23B-080 and the bracket 23B-050 from the lavatory structure.

SUB TASK 25-41-51-040-072-B01
D2549010510600 D2549010513600 D2549010601400 D2549020508200 D2549020604800 D2549020606800 D2549020609200 D2549020609600 D2549020612000 D2549020613200 D2549020700400 D2549020700600 D2549020701200 D2549020704600 D2549030504000 D2549030506000 D2549030508000 D2549030508400 D2549030510000 D2549030510600 D2549030511000 D2549030511200 D2549030511400 D2549030512000 D2549030514600 D2549030514800 D2549030601400 D2549030602200 D2549030602800 D2549030604400 D2549030604800 D2549030608200 R225401134-008 R225401134-020 R225401134-022 R225401160-002

2. Disassembly of the Waste Water System (23B-1)

NOTE: See TABLE 3635 for the references for the replacement procedures of permanent installed parts.

More data for bonded parts are given in column SEE REPAIR TASK. Use the data for the selection of the related repair solution.

IPL FIG. ITEM	COMPONENT PART NAME	IPL FIG. ITEM	REPLACEMENT PART NAME	SEE REPAIR TASK
23B-001	Waste Water System	23B-220	Insulation	Replacement of the Bonded Parts self adhesive
23B-001	Waste Water System	23B-230	Insulation	Replacement of the Bonded Parts self adhesive

Table 3635
Reference list for the replacement of permanent installed parts

(a) Remove the clamps 23B-030 and the hose 23B-020 from the drain assembly 23B-010, from the lavatory structure and from the drain valve 23B-040.

NOTE: For further instructions, see CMMV 38-31-14_58568 (drain assembly).

(b) Remove the drain assembly 23B-010 from the lavatory structure.

(c) Remove the screw 23B-180, the washer 23B-170, the nut 23B-190, the clamp 23B-130 and the hose 23B-120 from the lavatory structure.

(d) Remove the screw 23B-160, the washer 23B-170, the clamps 23B-130, 23B-140, the spacer 23B-150 and the hose 23B-120 from the lavatory structure.

(e) Remove the clamps 23B-030 and the hose 23B-120 from the drain valve 23B-040 and from the lavatory structure.

NOTE: For further instructions, see CMMV 38-30-30_U9084 (drain valve).

(f) Remove the ground cable from the drain valve 23B-040.

(g) Remove the screws 23B-090, the washers 23B-100, the nuts 23B-110 and the drain valve 23B-040 from the bracket 23B-050.

(h) Remove the screws 23B-060, the washers 23B-070, the nuts 23B-080 and the bracket 23B-050 from the lavatory structure.

SUB TASK 25-41-51-040-072-C01
D2549010610200 D2549010611400 D2549020506200 D2549020506400 D2549020507000 D2549020701000 D2549030402400 D2549030404400 D2549030505400 D2549030506600 D2549030509400 D2549030513800 D2549030603800 D2549030607400 D2549030608800 D2549030611200 D2549030613200

3. Disassembly of the Waste Water System (23B-1)

(a) Remove the clamps 23B-030 and the hose 23B-020 from the drain assembly 23B-010, from the lavatory structure and from the drain valve 23B-040.

NOTE: For further instructions, see CMMV 38-31-14_58568 (drain assembly).

(b) Remove the drain assembly 23B-010 from the lavatory structure.

(c) Remove the screws 23B-210, the washers 23B-175, the clamps 23B-135, the spacers 23B-151 and the hose 23B-120 from the lavatory structure.

(d) Remove the clamps 23B-030 and the hose 23B-120 from the drain valve 23B-040 and from the lavatory structure.

NOTE: For further instructions, see CMMV 38-30-30_U9084 (drain valve).

(e) Remove the ground cable from the drain valve 23B-040.

(f) Remove the screws 23B-090, the washers 23B-100, the nuts 23B-110 and the drain valve 23B-040 from the bracket 23B-050.

(g) Remove the screws 23B-060, the washers 23B-070, the nuts 23B-080 and the bracket 23B-050 from the lavatory structure.

SUB TASK 25-41-51-040-072-D01
D2549010405400 D2549010606800 D2549010607000 D2549010607400 D2549010608600 D2549010609000 D2549010611600 D2549010612000 D2549010612200 D2549010613600 D2549010614400 D2549010614800 D2549020402200 D2549020402400 D2549020403000 D2549020404200 D2549020405800 D2549020406000 D2549020407200 D2549020408800 D2549020507200 D2549020510400 D2549020512800 D2549020605600 D2549020608200 D2549020613600 D2549020702800 D2549020707600 D2549020713800 D2549020801000 D2549020802200 D2549020802800 D2549020804200 D2549020805400 D2549020806000 D2549020814000 D2549030400400 D2549030400600 D2549030401200 D2549030402000 D2549030402600 D2549030402800 D2549030403400 D2549030404000 D2549030404200 D2549030404600 D2549030405000 D2549030405200 D2549030407800 D2549030409000 D2549030409800 D2549030410000 D2549030411600 D2549030414800 D2549030507800 D2549030513000 D2549030513200 D2549030600200 D2549030605600 D2549030606800 D2549030607000 D2549030608000 D2549030609000 D2549030609800 D2549030610200 D2549030610600 D2549030612400 D2549030612800 D2549030613600 D2549030702400 D2549030702800 R225401134-002 R225401134-004 R225401134-006 R225401134-010 R225401134-012 R225401134-014 R225401134-016 R225401134-018 R225401134-024 R225401134-026 R225401134-028 R225401134-030 R225401134-032 R225401134-034 R225401134-036 R225401134-038 R225401160-000 R225401196-010 R225401196-040 R225401196-056 R225401614-000 R225401618-000 R225401618-002 R225401691-002

4. Disassembly of the Waste Water System (23B-1)

NOTE: **See TABLE 3636 for the references for the replacement procedures of permanent installed parts.**

More data for bonded parts are given in column SEE REPAIR TASK. Use the data for the selection of the related repair solution.

IPL FIG. ITEM	COMPONENT PART NAME	IPL FIG. ITEM	REPLACEMENT PART NAME	SEE REPAIR TASK
23B-001	Waste Water System	23B-230	Insulation	Replacement of the Bonded Parts self adhesive

Table 3636
Reference list for the replacement of permanent installed parts

(a) Remove the clamps 23B-030 and the hose 23B-020 from the drain assembly 23B-010, from the lavatory structure and from the drain valve 23B-040.

NOTE: **For further instructions, see CMMV 38-31-14_58568 (drain assembly).**

(b) Remove the drain assembly 23B-010 from the lavatory structure.

(c) Remove the screw 23B-180, the washer 23B-170, the nut 23B-190, the clamp 23B-130 and the hose 23B-120 from the lavatory structure.

(d) Remove the screw 23B-160, the washer 23B-170, the clamps 23B-130, 23B-140, the spacer 23B-150 and the hose 23B-120 from the lavatory structure.

(e) Remove the clamps 23B-030 and the hose 23B-120 from the drain valve 23B-040 and from the lavatory structure.

NOTE: **For further instructions, see CMMV 38-30-30_U9084 (drain valve).**

(f) Remove the ground cable from the drain valve 23B-040.

(g) Remove the screws 23B-090, the washers 23B-100, the nuts 23B-110 and the drain valve 23B-040 from the bracket 23B-050.

(h) Remove the screws 23B-060, the washers 23B-070, the nuts 23B-080 and the bracket 23B-050 from the lavatory structure.

SUB TASK 25-41-51-040-072-E01
D2547160900200 D2547160900400 D2549010400000 D2549010400200 D2549010400400 D2549010400600 D2549010400800 D2549010401000

D2549010401400 D2549010402200 D2549010402400 D2549010402600
D2549010402800 D2549010403000 D2549010403200 D2549010403600
D2549010404400 D2549010404600 D2549010404800 D2549010405000
D2549010405200 D2549010405600 D2549010405800 D2549010406000
D2549010406200 D2549010406400 D2549010406800 D2549010407000
D2549010509400 D2549010509600 D2549010509800 D2549010510000
D2549010510200 D2549010510400 D2549010510800 D2549010511000
D2549010511400 D2549010511600 D2549010511800 D2549010512000
D2549010512200 D2549010512400 D2549010512600 D2549010513000
D2549010513200 D2549010513400 D2549010513800 D2549010514200
D2549010514400 D2549010514600 D2549010514800 D2549010600000
D2549010600200 D2549010600400 D2549010600600 D2549010600800
D2549010601000 D2549010601200 D2549010601600 D2549010601800
D2549010602000 D2549010602200 D2549010602400 D2549010602600
D2549010602800 D2549010603000 D2549010603200 D2549010603400
D2549010603600 D2549010603800 D2549010604000 D2549010604200
D2549010604400 D2549010604600 D2549010604800 D2549010605000
D2549010605200 D2549010605600 D2549010605800 D2549010606000
D2549010606200 D2549010606400 D2549010606600 D2549010607200
D2549010607600 D2549010607800 D2549010608200 D2549010608400
D2549010608800 D2549010609200 D2549010609400 D2549010609600
D2549010609800 D2549010610000 D2549010610600 D2549010610800
D2549010611000 D2549010611200 D2549010611800 D2549010612400
D2549010612600 D2549010613200 D2549010613400 D2549010613800
D2549010614200 D2549020300000 D2549020300400 D2549020300600
D2549020300800 D2549020301000 D2549020301600 D2549020301800
D2549020302800 D2549020400000 D2549020400400 D2549020400600
D2549020400800 D2549020401000 D2549020401200 D2549020401600
D2549020402000 D2549020403200 D2549020403800 D2549020404000
D2549020404400 D2549020404800 D2549020405000 D2549020405200
D2549020405400 D2549020405600 D2549020406200 D2549020406400
D2549020407000 D2549020407400 D2549020407600 D2549020407800
D2549020408200 D2549020409000 D2549020409600 D2549020410200
D2549020410800 D2549020411000 D2549020411200 D2549020411400
D2549020411600 D2549020412400 D2549020412800 D2549020413400
D2549020413600 D2549020413800 D2549020414000 D2549020414200
D2549020414600 D2549020414800 D2549020502200 D2549020505600
D2549020506600 D2549020506800 D2549020507400 D2549020507600
D2549020507800 D2549020508000 D2549020508400 D2549020508600
D2549020508800 D2549020509000 D2549020509200 D2549020509600
D2549020509800 D2549020510000 D2549020510600 D2549020510800
D2549020511000 D2549020511200 D2549020511600 D2549020511800
D2549020512000 D2549020512200 D2549020512400 D2549020512600
D2549020513000 D2549020513200 D2549020513400 D2549020513800
D2549020514000 D2549020514200 D2549020514400 D2549020514600
D2549020514800 D2549020602200 D2549020604200 D2549020604400
D2549020604600 D2549020605000 D2549020605200 D2549020605400

D2549020605800 D2549020606000 D2549020607000 D2549020607400
D2549020607600 D2549020607800 D2549020608400 D2549020608600
D2549020608800 D2549020609000 D2549020609400 D2549020609800
D2549020610000 D2549020610200 D2549020610400 D2549020610600
D2549020610800 D2549020611000 D2549020611200 D2549020611400
D2549020611600 D2549020611800 D2549020612200 D2549020612400
D2549020612600 D2549020612800 D2549020613000 D2549020613800
D2549020614000 D2549020614400 D2549020614600 D2549020614800
D2549020700000 D2549020700200 D2549020700800 D2549020701400
D2549020701600 D2549020701800 D2549020702000 D2549020702200
D2549020702400 D2549020702600 D2549020703200 D2549020703400
D2549020703600 D2549020703800 D2549020704000 D2549020704200
D2549020704400 D2549020704800 D2549020705000 D2549020705200
D2549020705400 D2549020705600 D2549020705800 D2549020706000
D2549020706200 D2549020706400 D2549020706600 D2549020706800
D2549020707000 D2549020707200 D2549020707400 D2549020707800
D2549020708000 D2549020708200 D2549020708400 D2549020708600
D2549020708800 D2549020709000 D2549020709200 D2549020709400
D2549020709600 D2549020709800 D2549020710000 D2549020710200
D2549020710400 D2549020710600 D2549020710800 D2549020711000
D2549020711200 D2549020711400 D2549020711600 D2549020712200
D2549020712400 D2549020712800 D2549020713000 D2549020713200
D2549020713400 D2549020713600 D2549020714000 D2549020714400
D2549020714600 D2549020800000 D2549020800200 D2549020800400
D2549020800600 D2549020801200 D2549020801400 D2549020801600
D2549020802000 D2549020802400 D2549020802600 D2549020803000
D2549020803200 D2549020803400 D2549020803600 D2549020803800
D2549020804000 D2549020804800 D2549020805000 D2549020805200
D2549020805600 D2549020805800 D2549020806200 D2549020806400
D2549020806600 D2549020806800 D2549020807200 D2549020807400
D2549020807600 D2549020807800 D2549020808400 D2549020808600
D2549020808800 D2549020809000 D2549020809400 D2549020809600
D2549020809800 D2549020810200 D2549020810800 D2549020811200
D2549020811600 D2549020811800 D2549020812000 D2549020812200
D2549020812800 D2549020813000 D2549020813200 D2549020813800
D2549020814200 D2549020814400 D2549030400000 D2549030400200
D2549030401400 D2549030401600 D2549030401800 D2549030402200
D2549030403000 D2549030403600 D2549030403800 D2549030404800
D2549030405400 D2549030405600 D2549030405800 D2549030406400
D2549030406600 D2549030406800 D2549030407000 D2549030407200
D2549030407600 D2549030408200 D2549030408400 D2549030408600
D2549030409200 D2549030409400 D2549030410200 D2549030410400
D2549030411400 D2549030411800 D2549030412200 D2549030413400
D2549030414000 D2549030414400 D2549030414600 D2549030503800
D2549030504200 D2549030504600 D2549030504800 D2549030505200
D2549030505600 D2549030505800 D2549030506200 D2549030506400
D2549030506800 D2549030507000 D2549030507200 D2549030507400

D2549030507600 D2549030508200 D2549030508600 D2549030508800
D2549030509000 D2549030509200 D2549030509600 D2549030509800
D2549030510200 D2549030510400 D2549030510800 D2549030511600
D2549030511800 D2549030512200 D2549030512400 D2549030512800
D2549030513400 D2549030513600 D2549030514000 D2549030514200
D2549030514400 D2549030600000 D2549030600400 D2549030600600
D2549030600800 D2549030601000 D2549030601200 D2549030601600
D2549030601800 D2549030602000 D2549030602400 D2549030602600
D2549030603000 D2549030603200 D2549030603400 D2549030603600
D2549030604200 D2549030604600 D2549030605000 D2549030605200
D2549030605400 D2549030605800 D2549030606000 D2549030606200
D2549030606400 D2549030606600 D2549030607200 D2549030607600
D2549030607800 D2549030608400 D2549030608600 D2549030609200
D2549030610000 D2549030611000 D2549030611400 D2549030611600
D2549030611800 D2549030612000 D2549030612200 D2549030612600
D2549030613400 D2549030613800 D2549030614000 D2549030614200
D2549030614400 D2549030614800 D2549030700000 D2549030700200
D2549030700400 D2549030700600 D2549030700800 D2549030701000
D2549030702200 D2549030702600 D2549030703000 D2549030703200
D2549030703400 D2549030703600 D2549030703800 D2549030704000
D2549030704400 D2549030704600 D2549030704800 D2549040500200
D2549040500400 D2549040500800 D2549040501000 D2549040501400
D2549040501800 D2549040502000 R225401107-004 R225401115-000 R225401136-
000 R225401136-004 R225401136-006 R225401136-008 R225401136-010 R225401136-
014 R225401136-016 R225401136-018 R225401136-020 R225401136-022 R225401137-
000 R225401137-002 R225401137-004 R225401137-006 R225401137-008 R225401137-
010 R225401137-012 R225401137-014 R225401137-016 R225401142-000 R225401142-
002 R225401145-002 R225401145-004 R225401145-006 R225401145-008 R225401145-
010 R225401145-012 R225401145-014 R225401152-000 R225401152-002 R225401152-
004 R225401152-006 R225401152-008 R225401152-010 R225401153-000 R225401159-
000 R225401168-000 R225401168-002 R225401168-004 R225401168-006 R225401168-
008 R225401168-010 R225401168-012 R225401168-014 R225401168-016 R225401168-
018 R225401168-020 R225401168-022 R225401168-024 R225401168-026 R225401168-
028 R225401172-000 R225401172-002 R225401172-004 R225401172-006 R225401172-
008 R225401172-010 R225401172-012 R225401172-014 R225401172-016 R225401172-
018 R225401175-000 R225401175-002 R225401176-000 R225401183-000 R225401183-
002 R225401183-004 R225401183-006 R225401183-008 R225401192-000 R225401192-
002 R225401195-000 R225401196-000 R225401196-002 R225401196-004 R225401196-
006 R225401196-008 R225401196-012 R225401196-014 R225401196-016 R225401196-
020 R225401196-022 R225401196-024 R225401196-034 R225401196-036 R225401196-
038 R225401196-042 R225401196-044 R225401196-046 R225401196-048 R225401196-
050 R225401196-052 R225401196-054 R225401196-058 R225401196-060 R225401196-
062 R225401196-066 R225401196-068 R225401196-070 R225401199-000 R225401199-
002 R225401199-004 R225401199-006 R225401199-008 R225401600-000
R225401600-002 R225401600-004 R225401603-000 R225401605-000 R225401605-
002 R225401611-006 R225401611-008 R225401611-010 R225401611-012 R225401611-
018 R225401613-000 R225401619-000 R225401619-002 R225401622-000

R225401622-002 R225401624-000 R225401625-000 R225401627-004 R225401629-000 R225401629-002 R225401639-000 R225401639-002 R225401643-000 R225401643-002 R225401648-000 R225401648-002 R225401648-004 R225401648-008 R225401649-000 R225401656-000 R225401656-002 R225401662-002 R225401671-000 R225401671-002 R225401673-002 R225401673-004 R225401673-006 R225401675-000 R225401676-000 R225401683-000 R225401685-000 R225401685-002 R225401693-000 R225401697-000 R225401697-002 R225401803-000 R225401803-002 R225401811-000 R225401814-000

5. Disassembly of the Waste Water System (23B-1)

   (a) Remove the insulations 23B-220, 23B-230 and the adhesive tape 23B-240.

   (b) Remove the clamps 23B-030 and the hose 23B-020 from the drain assembly 23B-010, from the lavatory structure and from the drain valve 23B-040.

   NOTE: For further instructions, see CMMV 38-31-14_58568 (drain assembly).

   (c) Remove the drain assembly 23B-010 from the lavatory structure.

   (d) Remove the screw 23B-180, the washer 23B-170, the nut 23B-190, the clamp 23B-130 and the hose 23B-120 from the lavatory structure.

   (e) Remove the screws 23B-160, 23B-162, 23B-164, the washers 23B-170, the clamps 23B-130, 23B-137, 23B-140, the spacers 23B-150, 23B-152 and the hose 23B-120 from the lavatory structure.

   (f) Remove the clamps 23B-030 and the hose 23B-120 from the drain valve 23B-040 and from the lavatory structure.

   NOTE: For further instructions, see CMMV 38-30-30_U9084 (drain valve).

   (g) Remove the ground cable from the drain valve 23B-040.

   (h) Remove the screws 23B-090, the washers 23B-100, the nuts 23B-110 and the drain valve 23B-040 from the bracket 23B-050.

   (i) Remove the screws 23B-060, the washers 23B-070, the nuts 23B-080 and the bracket 23B-050 from the lavatory structure.

TASK 25-41-51-000-820-D01
D2547161903000 D2549010502400 D2549010505600 D2549010506800 D2549010507800 D2549020600400 D2549020603000 D2549020603600 D2549020604000 D2549020606400 R225401128-000

196. Disassembly of the Waste Water System

A. General

A complete disassembly of the component is not necessary and not recommended.

Do not disassemble the component more than it is necessary for:

- Cleaning
- Visual Inspection
- Replacement of defective parts.

B. Job Set-up Information

(1) Not applicable

C. Procedure

WARNING: BE CAREFUL WHEN YOU USE SOLVENTS/CLEANING AGENTS, SEALANTS AND OTHER MATERIALS. OBEY THE MATERIAL MANUFACTURER'S INSTRUCTIONS AND THE LOCAL REGULATIONS. MAKE SURE THAT THERE IS A GOOD FLOW OF AIR THROUGH THE WORK AREA. DO NOT BREATHE THE FUMES. DO NOT SMOKE. DO NOT USE THESE MATERIALS NEAR A FLAME, SPARKS OR SOURCES OF HEAT. USE PROTECTIVE CLOTHING, GOGGLES AND GLOVES. IF YOU GET ONE OF THESE MATERIALS ON YOUR SKIN OR IN YOUR EYES, FLUSH IT AWAY WITH A FLOW OF CLEAN WATER. IF YOU GET ONE OF THESE MATERIALS IN YOUR MOUTH, GET IMMEDIATE MEDICAL AID. IN GENERAL, THESE MATERIALS ARE POISONOUS, FLAMMABLE AND SKIN IRRITANTS.

CAUTION: DO ALL THE WORK ON A CLEAN, SOFT SURFACE TO PREVENT DAMAGE TO THE COMPONENTS.

SUB TASK 25-41-51-040-073-A01
1. Disassembly of the Waste Water System (23C-1)

(a) Remove the clamps 23C-030, 23C-120 and the hose 23C-020 from the drain assembly 23C-010, from the lavatory structure and from the drain valve 23C-040.

NOTE: For further instructions, see CMMV 38-31-14_58568 (drain assembly).

NOTE: For further instructions, see CMMV 38-30-30_U9084 (drain valve).

(b) Remove the drain assembly 23C-010 from the lavatory structure.

(c) Remove the clamps 23C-130 and the tube 23C-170 from the lavatory structure.

(d) Remove the screws 23C-190, the washers 23C-150, the clamps 23C-140, the spacers 23C-180 and the tube 23C-170 from the lavatory structure.

(e) Remove the clamps 23C-030, 23C-130 and the hose 23C-160 from the tube 23C-170 and from the drain valve 23C-040.

(f) Remove the ground cable from the drain valve 23C-040.

(g) Remove the screws 23C-090, the washers 23C-100, the nuts 23C-110 and the drain valve 23C-040 from the bracket 23C-050.

(h) Remove the screws 23C-060, the washers 23C-070, the nuts 23C-080 and the bracket 23C-050 from the lavatory structure.

TASK 25-41-51-000-820-E01

D2549010401600 D2549010401800 D2549010402000 D2549010403400 D2549010403800
D2549010404000 D2549010404200 D2549010610400 D2549010613000 D2549010614600
D2549020302000 D2549020400200 D2549020401400 D2549020402600 D2549020403400
D2549020403600 D2549020404600 D2549020406600 D2549020406800 D2549020408000
D2549020408600 D2549020409200 D2549020409400 D2549020409800 D2549020410400
D2549020410600 D2549020411800 D2549020412000 D2549020412200 D2549020412600
D2549020413000 D2549020413200 D2549020513600 D2549020712600 D2549020800800
D2549020801800 D2549020804400 D2549020807000 D2549020808200 D2549020810000
D2549020810400 D2549020810600 D2549020811400 D2549020812400 D2549020812600
D2549020813400 D2549020813600 D2549020814600 D2549020814800 D2549030401000
D2549030406000 D2549030407400 D2549030408000 D2549030409600 D2549030410600
D2549030410800 D2549030411200 D2549030412000 D2549030412400 D2549030412600
D2549030412800 D2549030413000 D2549030413200 D2549030413600 D2549030414200
D2549030610400 D2549030614600 D2549030701200 D2549030701400 D2549030701600
D2549030701800 D2549030702000 D2549030704200 D2549030705200 D2549030705600
D2549040500600 D2549040501200 D2549040501600 R225401136-012 R225401136-024
R225401196-018 R225401196-064 R225401199-010 R225401199-012 R225401602-000
R225401609-000 R225401611-000 R225401611-014 R225401611-016 R225401611-020
R225401627-000 R225401627-002 R225401643-004 R225401643-006 R225401643-008
R225401646-000 R225401646-002 R225401647-000 R225401648-006 R225401658-000
R225401662-000 R225401673-000 R225401688-000 R225401689-004 R225401689-006
R225401691-000 R225401808-000

197. Disassembly of the Waste Water System

A. General

A complete disassembly of the component is not necessary and not recommended.

Do not disassemble the component more than it is necessary for:

- Cleaning
- Visual Inspection
- Replacement of defective parts.

B. Job Set-up Information

(1) Not applicable

C. Procedure

WARNING: **BE CAREFUL WHEN YOU USE SOLVENTS/CLEANING AGENTS, SEALANTS AND OTHER MATERIALS. OBEY THE MATERIAL MANUFACTURER'S INSTRUCTIONS AND THE LOCAL REGULATIONS. MAKE SURE THAT THERE IS A GOOD FLOW OF AIR THROUGH THE WORK AREA. DO NOT BREATHE THE FUMES. DO NOT SMOKE. DO NOT USE THESE MATERIALS NEAR A FLAME, SPARKS OR SOURCES OF HEAT. USE PROTECTIVE CLOTHING, GOGGLES AND GLOVES. IF YOU GET ONE OF THESE MATERIALS ON YOUR SKIN OR IN YOUR EYES, FLUSH IT AWAY WITH A FLOW OF CLEAN WATER. IF YOU GET ONE OF THESE MATERIALS IN YOUR MOUTH, GET IMMEDIATE MEDICAL AID. IN GENERAL, THESE MATERIALS ARE POISONOUS, FLAMMABLE AND SKIN IRRITANTS.**

CAUTION: **DO ALL THE WORK ON A CLEAN, SOFT SURFACE TO PREVENT DAMAGE TO THE COMPONENTS.**

SUB TASK 25-41-51-040-074-A01

1. Disassembly of the Waste Water System (23D-1)

   (a) Remove the adhesive tape 23D-210 and the insulation 23D-200.

   (b) Remove the clamps 23D-030 and the hose 23D-020 from the drain assembly 23D-010, from the lavatory structure and from the drain valve 23D-040.

   NOTE: **For further instructions, see CMMV 38-31-14_58568 (drain assembly).**

   NOTE: **For further instructions, see CMMV 38-30-30_U9084 (drain valve).**

   (c) Remove the drain assembly 23D-010 from the lavatory structure.

   (d) Remove the clamp 23D-030 and the hose 23D-120 from the lavatory structure.

   (e) Remove the screws 23D-160, 23D-162, 23D-164, the washers 23D-170, the clamps 23D-130, 23D-135, 23D-140, the spacers 23D-150, 23D-155 and the hose 23D-120 from the lavatory structure.

   (f) Remove the screw 23D-180, the washer 23D-170, the nut 23D-190, the clamp 23D-130 and the hose 23D-120 from the lavatory structure.

   (g) Remove the clamp 23D-030 and the hose 23D-120 from the drain valve 23D-040.

   (h) Remove the ground cable from the drain valve 23D-040.

   (i) Remove the screws 23D-090, the washers 23D-100, the nuts 23D-110 and the drain valve 23D-040 from the bracket 23D-050.

(j) Remove the screws 23D-060, the washers 23D-070, the nuts 23D-080 and the bracket 23D-050 from the lavatory structure.

TASK 25-41-51-000-820-F01
D2549020712000

198. Disassembly of the Waste Water System

A. General

- Not applicable

B. Procedure

SUB TASK 25-41-51-000-132-A01
1. Disassembly of the Waste Water System

(a) Not applicable.

TASK 25-41-51-000-821-A01

D2547161903000 D2549010500000 D2549010500400 D2549010500600 D2549010500800 D2549010501000 D2549010501200 D2549010501400 D2549010501600 D2549010502000 D2549010502600 D2549010502800 D2549010503200 D2549010503400 D2549010503600 D2549010503800 D2549010504200 D2549010504400 D2549010504600 D2549010504800 D2549010505000 D2549010505200 D2549010505400 D2549010505600 D2549010505800 D2549010506000 D2549010506200 D2549010506400 D2549010506800 D2549010507000 D2549010507200 D2549010507400 D2549010507600 D2549010507800 D2549010508400 D2549010508600 D2549010508800 D2549010509200 D2549010511200 D2549020500200 D2549020500400 D2549020500800 D2549020501600 D2549020502000 D2549020502400 D2549020502600 D2549020502800 D2549020503000 D2549020503400 D2549020503600 D2549020503800 D2549020504000 D2549020504200 D2549020504400 D2549020504600 D2549020505000 D2549020505400 D2549020505800 D2549020600000 D2549020600200 D2549020600400 D2549020600800 D2549020601000 D2549020601200 D2549020601400 D2549020601600 D2549020601800 D2549020602000 D2549020602400 D2549020602600 D2549020603000 D2549020603200 D2549020603400 D2549020603600 D2549020603800 D2549020604000 D2549020606400 D2549020606600 D2549020607200 D2549030500200 D2549030500600 D2549030500800 D2549030501000 D2549030501400 D2549030501600 D2549030502000 D2549030502200 D2549030502600 D2549030502800 D2549030503000 D2549030503200 D2549030503400 D2549030503600 R225401107-000 R225401107-002 R225401115-002 R225401128-000 R225401133-000 R225401139-000 R225401146-000 R225401146-002 R225401188-004 R225401188-006

199. Disassembly of the Electrical System

A. General

A complete disassembly of the component is not necessary and not recommended.

Do not disassemble the component more than it is necessary for:

- Cleaning
- Visual Inspection
- Replacement of defective parts.

B. Job Set-up Information

(1) Not applicable

C. Procedure

WARNING: **BE CAREFUL WHEN YOU USE SOLVENTS/CLEANING AGENTS, SEALANTS AND OTHER MATERIALS. OBEY THE MATERIAL MANUFACTURER'S INSTRUCTIONS AND THE LOCAL REGULATIONS. MAKE SURE THAT THERE IS A GOOD FLOW OF AIR THROUGH THE WORK AREA. DO NOT BREATHE THE FUMES. DO NOT SMOKE. DO NOT USE THESE MATERIALS NEAR A FLAME, SPARKS OR SOURCES OF HEAT. USE PROTECTIVE CLOTHING, GOGGLES AND GLOVES. IF YOU GET ONE OF THESE MATERIALS ON YOUR SKIN OR IN YOUR EYES, FLUSH IT AWAY WITH A FLOW OF CLEAN WATER. IF YOU GET ONE OF THESE MATERIALS IN YOUR MOUTH, GET IMMEDIATE MEDICAL AID. IN GENERAL, THESE MATERIALS ARE POISONOUS, FLAMMABLE AND SKIN IRRITANTS.**

CAUTION: **DO ALL THE WORK ON A CLEAN, SOFT SURFACE TO PREVENT DAMAGE TO THE COMPONENTS.**

SUB TASK 25-41-51-040-076-A01
D2549020606600

1. Disassembly of the Electrical System (26-1)

   NOTE: **It is recommended that you only remove the components if they are damaged.**

   (a) Remove the screws 26-350, 26-360, the washers 26-380, the lock washers 26-410, the nuts 26-400 and the clamps 26-420, 26-430 from the lavatory structure.

   (b) Remove the screws 26-350, 26-360, the washers 26-380, the lock washers 26-410 and the nuts 26-400 from the lavatory structure.

   (c) Remove the nuts 26-390 and the washers 26-380 from the lavatory structure.

   (d) Disconnect the cables, the applicable bonding straps 26-260, 26-270, 26-280, 26-290, 26-300, 26-310, 26-340 and the cable harness assembly 26-010 from the electrical components.

   (e) See Disassembly of the Cable Harness Assembly for the disassembly procedure of the cable harness assembly 26-010.

   (f) Remove the screws 26-040, the washers 26-030, the smoke detector 26-020 and the smoke detector sealing 26-050 from the lavatory structure.

   NOTE: **For further instructions, see CMMV 26-17-15_F4885 (smoke detector).**

   (g) Remove the brackets 26-110 from the lavatory structure.

(h) Remove the call light 26-100 from the lavatory structure.

NOTE: For further instructions, see CMMV 33-20-01_DD704 (call light).

(i) Remove and disassemble the light assembly 26-130 as follows:

NOTE: For further instructions, see CMMV 33-24-05_DD704 (light assembly).

1 Remove the lens 26-133, the housing 26-135, the incandescent lamp 26-137 and the lamp 26-138.

(j) Remove the loudspeaker 26-140 from the lavatory structure.

NOTE: For further instructions, see CMMV 23-31-12_D7320 (loudspeaker).

(k) Remove the screws 26-120 and the washers 26-030 from the lavatory structure.

(l) Remove the screws 26-440, the washers 26-450 and the nuts 26-460 from the lavatory structure.

(m) Remove the screws 26-480, 26-490, the nuts 26-500 and the sheet 26-470.

(n) Remove the screws 26-230 and the microswitch 26-150.

SUB TASK 25-41-51-040-076-B01
D2549030500200

2. Disassembly of the Electrical System (26-1)

NOTE: It is recommended that you only remove the components if they are damaged.

(a) Remove the screws 26-350, 26-360, the washers 26-380, the lock washers 26-410, the nuts 26-400 and the clamps 26-420, 26-430 from the lavatory structure.

(b) Remove the screws 26-350, 26-360, the washers 26-380, the lock washers 26-410 and the nuts 26-400 from the lavatory structure.

(c) Remove the nuts 26-390 and the washers 26-380 from the lavatory structure.

(d) Remove the screws 26-370 and the bonding straps 26-320, 26-330 from the electrical components.

(e) Disconnect the cables and the applicable bonding straps 26-260, 26-280, 26-290, 26-300, 26-310, 26-340 from the electrical components.

(f) Remove the screws 26-040, the washers 26-030, the smoke detector 26-020 and the smoke detector sealing 26-050 from the lavatory structure.

NOTE: For further instructions, see CMMV 26-16-16_F4885 (smoke detector).

(g) Remove the brackets 26-110 from the lavatory structure.

(h) Remove the call light 26-100 from the lavatory structure.

NOTE: For further instructions, see CMMV 33-20-01_DD704 (call light).

(i) Remove and disassemble the light assembly 26-130 as follows:

NOTE: For further instructions, see CMMV 33-24-05_DD704 (light assembly).

1 Remove the lens 26-133, the housing 26-135, the incandescent lamp 26-137 and the lamp 26-138.

(j) Remove the loudspeaker 26-140 from the lavatory structure.

NOTE: For further instructions, see CMMV 23-31-12_D7320 (loudspeaker).

(k) Remove the screws 26-120 and the washers 26-030 from the lavatory structure.

(l) Remove the screws 26-440, the washers 26-450 and the nuts 26-460 from the lavatory structure.

(m) Remove the screws 26-480, 26-490, the nuts 26-500 and the sheet 26-470.

(n) Remove the screws 26-230 and the microswitch 26-150.

SUB TASK 25-41-51-040-076-C01
D2549010506800 D2549020600400 D2549020601400 D2549020601600 R225401128-000 R225401133-000

3. Disassembly of the Electrical System (26-1)

NOTE: It is recommended that you only remove the components if they are damaged.

(a) Remove the screws 26-350, 26-360, the washers 26-380, the lock washers 26-410, the nuts 26-400 and the clamps 26-420, 26-430 from the lavatory structure.

(b) Remove the screws 26-350, 26-360, the washers 26-380, the lock washers 26-410 and the nuts 26-400 from the lavatory structure.

(c) Remove the nuts 26-390 and the washers 26-380 from the lavatory structure.

(d) Remove the screws 26-370 and the bonding straps 26-320, 26-330 from the electrical components.

(e) Disconnect the cables, the applicable bonding straps 26-260, 26-270, 26-280, 26-300, 26-310, 26-340 and the cable harness assembly 26-010 from the electrical components.

(f) See Disassembly of the Cable Harness Assembly for the disassembly procedure of the cable harness assembly 26-010.

(g) Remove the screws 26-040, the washers 26-030, the smoke detector 26-020 and the smoke detector sealing 26-050 from the lavatory structure.

NOTE: For further instructions, see CMMV 26-17-15_F4885 (smoke detector).

(h) Remove the brackets 26-110 from the lavatory structure.

(i) Remove the call light 26-100 from the lavatory structure.

NOTE: For further instructions, see CMMV 33-20-01_DD704 (call light).

(j) Remove and disassemble the light assembly 26-130 as follows:

NOTE: For further instructions, see CMMV 33-24-05_DD704 (light assembly).

1 Remove the lens 26-133, the housing 26-135, the incandescent lamp 26-137 and the lamp 26-138.

(k) Remove the loudspeaker 26-140 from the lavatory structure.

NOTE: For further instructions, see CMMV 23-31-12_D7320 (loudspeaker).

(l) Remove the screws 26-120 and the washers 26-030 from the lavatory structure.

(m) Remove the screws 26-440, the washers 26-450 and the nuts 26-460 from the lavatory structure.

(n) Remove the screws 26-480, 26-490, the nuts 26-500 and the sheet 26-470.

(o) Remove the screws 26-230 and the microswitch 26-150.

SUB TASK 25-41-51-040-076-D01
D2549020603600 D2549020604000

4. Disassembly of the Electrical System (26-1)

NOTE: **It is recommended that you only remove the components if they are damaged.**

(a) Remove the screws 26-350, 26-360, the washers 26-380, the lock washers 26-410, the nuts 26-400 and the clamps 26-420, 26-430 from the lavatory structure.

(b) Remove the screws 26-350, 26-360, the washers 26-380, the lock washers 26-410 and the nuts 26-400 from the lavatory structure.

(c) Remove the nuts 26-390 and the washers 26-380 from the lavatory structure.

(d) Remove the screws 26-370 and the bonding straps 26-320, 26-330 from the electrical components.

(e) Disconnect the cables, the applicable bonding straps 26-260, 26-280, 26-290, 26-300, 26-310, 26-340 and the cable harness assembly 26-010 from the electrical components.

(f) See Disassembly of the Cable Harness Assembly for the disassembly procedure of the cable harness assembly 26-010.

(g) Remove the screws 26-040, the washers 26-030, the smoke detector 26-020 and the smoke detector sealing 26-050 from the lavatory structure.

NOTE: **For further instructions, see CMMV 26-17-15_F4885 (smoke detector).**

(h) Remove the brackets 26-110 from the lavatory structure.

(i) Remove the call light 26-100 from the lavatory structure.

NOTE: **For further instructions, see CMMV 33-20-01_DD704 (call light).**

(j) Remove and disassemble the light assembly 26-130 as follows:

NOTE: For further instructions, see CMMV 33-24-05_DD704 (light assembly).

1 Remove the lens 26-133, the housing 26-135, the incandescent lamp 26-137 and the lamp 26-138.

(k) Remove the loudspeaker 26-140 from the lavatory structure.

NOTE: For further instructions, see CMMV 23-31-12_D7320 (loudspeaker).

(l) Remove the screws 26-120 and the washers 26-030 from the lavatory structure.

(m) Remove the screws 26-440, the washers 26-450 and the nuts 26-460 from the lavatory structure.

(n) Remove the screws 26-480, 26-490, the nuts 26-500 and the sheet 26-470.

(o) Remove the screws 26-230 and the microswitch 26-150.

SUB TASK 25-41-51-040-076-E01
D2549010501000 D2549010501200 D2549010501600 D2549010502600 D2549010502800 D2549020501600 D2549020502000 D2549020502400 R225401107-000

5. Disassembly of the Electrical System (26-1)

NOTE: It is recommended that you only remove the components if they are damaged.

(a) Remove the screws 26-350, 26-360, the washers 26-380, the lock washers 26-410, the nuts 26-400 and the clamps 26-420, 26-430 from the lavatory structure.

(b) Remove the screws 26-350, 26-360, the washers 26-380, the lock washers 26-410 and the nuts 26-400 from the lavatory structure.

(c) Remove the nuts 26-390 and the washers 26-380 from the lavatory structure.

(d) Remove the screws 26-370 and the bonding straps 26-320, 26-330 from the electrical components.

(e) Disconnect the cables, the applicable bonding straps 26-260, 26-270, 26-280, 26-290, 26-300, 26-310, 26-340 and the cable harness 26-010 from the electrical components.

(f) See Disassembly of the Cable Harness Assembly for the disassembly procedure of the cable harness 26-010.

(g) Remove the screws 26-040, the washers 26-030, the smoke detector 26-020 and the smoke detector sealing 26-050 from the lavatory structure.

NOTE: For further instructions, see CMMV 26-17-17_F4885 (smoke detector).

(h) Remove the brackets 26-110 from the lavatory structure.

(i) Remove the call light 26-100 from the lavatory structure.

NOTE: For further instructions, see CMMV 33-20-01_DD704 (call light).

(j) Remove and disassemble the light assembly 26-130 as follows:

NOTE: For further instructions, see CMMV 33-24-05_DD704 (light assembly).

1 Remove the lens 26-133, the housing 26-135, the incandescent lamp 26-137 and the lamp 26-138.

(k) Remove the loudspeaker 26-140 from the lavatory structure.

NOTE: For further instructions, see CMMV 23-31-12_D7320 (loudspeaker).

(l) Remove the screws 26-120 and the washers 26-030 from the lavatory structure.

(m) Remove the screws 26-440, the washers 26-450 and the nuts 26-460 from the lavatory structure.

(n) Remove the screws 26-480, 26-490, the nuts 26-500 and the sheet 26-470.

(o) Remove and disassemble the microswitch 26-150 as follows:

1 Remove the screws 26-230 and the microswitch 26-150.

WARNING: **BE VERY CAREFUL WHEN YOU REMOVE OR INSTALL THE SPRING. BECAUSE THERE IS REMAINING TENSION IN THE SPRING, IT CAN CAUSE YOU INJURY.**

2 Remove the spring 26-210.

3 Remove the screws 26-170, the threaded bushings 26-190 and the guide 26-200.

4 Remove the screws 26-180 and the door contact switch 26-160 from the support angle 26-220.

SUB TASK 25-41-51-040-076-F01

D2547161903000 D2549010502000 D2549010503200 D2549010503600 D2549010503800 D2549010504200 D2549010504400 D2549010504600 D2549010504800 D2549010505000 D2549010505200 D2549010505400 D2549010505600 D2549010505800 D2549010506000 D2549010506400 D2549010507200 D2549010507400 D2549010507600 D2549010507800 D2549010508400 D2549010508600 D2549010508800 D2549010509200 D2549010511200 D2549020502600 D2549020503000 D2549020503400 D2549020503600 D2549020503800 D2549020504000 D2549020504200 D2549020504400 D2549020504600 D2549020505000 D2549020505400 D2549020505800 D2549020600800 D2549020601000 D2549020601200 D2549020601800 D2549020602000 D2549020602400 D2549020602600 D2549020603000 D2549020603200 D2549020603400 D2549020603800 D2549020606400 D2549020607200 D2549030500600 D2549030500800 D2549030501000 D2549030501400 D2549030501600 D2549030502000 D2549030502200 D2549030502600 D2549030502800 D2549030503000 D2549030503200 D2549030503400 D2549030503600 R225401107-002 R225401115-002 R225401139-000 R225401188-004 R225401188-006

6. Disassembly of the Electrical System (26-1)

NOTE: **It is recommended that you only remove the components if they are damaged.**

(a) Attach the nut 26-650 and the washer 26-640 to the lavatory.

(b) Remove the screws 26-350, 26-360, the washers 26-380, the lock washers 26-410, the nuts 26-400 and the clamps 26-420, 26-430 from the lavatory structure.

(c) Remove the screws 26-350, 26-360, the washers 26-380, the lock washers 26-410 and the nuts 26-400 from the lavatory structure.

(d) Remove the nuts 26-390 and the washers 26-380 from the lavatory structure.

(e) Remove the screws 26-370 and the bonding straps 26-320, 26-330 from the electrical components.

(f) Disconnect the cables, the applicable bonding straps 26-260, 26-270, 26-280, 26-290, 26-300, 26-310, 26-340 and the cable harness assembly 26-010 from the electrical components.

(g) See Disassembly of the Cable Harness Assembly for the disassembly procedure of the cable harness assembly 26-010.

(h) Remove the screws 26-040, the washers 26-030, the smoke detector 26-020 and the smoke detector sealing 26-050 from the lavatory structure.

NOTE: For further instructions, see CMMV 26-17-15_F4885 (smoke detector).

(i) Remove the brackets 26-110 from the lavatory structure.

(j) Remove the call light 26-100 from the lavatory structure.

NOTE: For further instructions, see CMMV 33-20-01_DD704 (call light).

(k) Remove and disassemble the light assembly 26-130 as follows:

NOTE: For further instructions, see CMMV 33-24-05_DD704 (light assembly).

1 Remove the lens 26-133, the housing 26-135, the incandescent lamp 26-137 and the lamp 26-138.

(l) Remove the loudspeaker 26-140 from the lavatory structure.

NOTE: For further instructions, see CMMV 23-31-12_D7320 (loudspeaker).

(m) Remove the screws 26-120 and the washers 26-030 from the lavatory structure.

(n) Remove the screws 26-440, the washers 26-450 and the nuts 26-460 from the lavatory structure.

(o) Remove the screws 26-480, 26-490, the nuts 26-500 and the sheet 26-470.

(p) Remove the screws 26-230 and the microswitch 26-150.

(q) Remove the nut 26-650 and the washer 26-640 from the lavatory.

SUB TASK 25-41-51-040-076-G01
D2549020600000 D2549020600200

7. Disassembly of the Electrical System (26-1)

NOTE: **See TABLE 3637 for the references for the replacement procedures of permanent installed parts.**

More data for bonded parts are given in column SEE REPAIR TASK. Use the data for the selection of the related repair solution.

IPL FIG. ITEM	COMPONENT PART NAME	IPL FIG. ITEM	REPLA-CEMENT PART NAME	SEE REPAIR TASK
26-001 26-510 26-520 26-550	Electrical System 2065VU Switch Panel Switch Housing Assembly Foil Assembly	26-560 26-570	Foil Adhesive Film	TBD self adhesive

Table 3637
Reference list for the replacement of permanent installed parts

NOTE: **It is recommended that you only remove the components if they are damaged.**

(a) Remove the screws 26-350, 26-360, the washers 26-380, the lock washers 26-410, the nuts 26-400 and the clamps 26-420, 26-430 from the lavatory structure.

(b) Remove the screws 26-350, 26-360, the washers 26-380, the lock washers 26-410 and the nuts 26-400 from the lavatory structure.

(c) Remove the nuts 26-390 and the washers 26-380 from the lavatory structure.

(d) Remove the screws 26-370 and the bonding straps 26-320, 26-330 from the electrical components.

(e) Disconnect the cables, the applicable bonding straps 26-260, 26-270, 26-280, 26-290, 26-300, 26-310, 26-340 and the cable harness assembly 26-010 from the electrical components.

(f) See Disassembly of the Cable Harness Assembly for the disassembly procedure of the cable harness assembly 26-010.

(g) Remove the screws 26-040, the washers 26-030, the smoke detector 26-020 and the smoke detector sealing 26-050 from the lavatory structure.

NOTE: For further instructions, see CMMV 26-17-15_F4885 (smoke detector).

(h) Remove the brackets 26-110 from the lavatory structure.

(i) Remove the call light 26-100 from the lavatory structure.

NOTE: For further instructions, see CMMV 33-20-01_DD704 (call light).

(j) Remove and disassemble the light assembly 26-130 as follows:

NOTE: For further instructions, see CMMV 33-24-05_DD704 (light assembly).

1 Remove the lens 26-133, the housing 26-135, the incandescent lamp 26-137 and the lamp 26-138.

(k) Remove the loudspeaker 26-140 from the lavatory structure.

NOTE: For further instructions, see CMMV 23-31-12_D7320 (loudspeaker).

(l) Remove and disassemble the 2065VU switch panel 26-510 as follows:

1 Remove the plugs 26-630 from the printed circuit board PCB 26-580.

2 Remove and disassemble the switch housing assembly 26-520 as follows:
a Remove the screws 26-590, the spring washers 26-600 and the switch housing 26-530 from the printed circuit board PCB 26-580.

3 Remove the protective lens 26-620 from the switch button switch 26-610.

4 Remove the switch button switch 26-610 from the printed circuit board PCB 26-580.

(m) Remove the screws 26-120 and the washers 26-030 from the lavatory structure.

(n) Remove the screws 26-440, the washers 26-450 and the nuts 26-460 from the lavatory structure.

(o) Remove the screws 26-480, 26-490, the nuts 26-500 and the sheet 26-470.

(p) Remove the screws 26-230 and the microswitch 26-150.

SUB TASK 25-41-51-040-076-H01
D2549010500400

8. Disassembly of the Electrical System (26-1)

NOTE: **It is recommended that you only remove the components if they are damaged.**

(a) Remove the screws 26-350, 26-360, the washers 26-380, the lock washers 26-410, the nuts 26-400 and the clamps 26-420, 26-430 from the lavatory structure.

(b) Remove the screws 26-350, 26-360, the washers 26-380, the lock washers 26-410 and the nuts 26-400 from the lavatory structure.

(c) Remove the nuts 26-390 and the washers 26-380 from the lavatory structure.

(d) Disconnect the cables, the applicable bonding straps 26-260, 26-270, 26-280, 26-290, 26-300, 26-310, 26-340 and the cable harness 26-010 from the electrical components.

(e) See Disassembly of the Cable Harness Assembly for the disassembly procedure of the cable harness 26-010.

(f) Remove the screws 26-040, the washers 26-030, the smoke detector 26-020 and the smoke detector sealing 26-050 from the lavatory structure.

NOTE: **For further instructions, see CMMV 26-17-17_F4885 (smoke detector).**

(g) Remove the brackets 26-110 from the lavatory structure.

(h) Remove the call light 26-100 from the lavatory structure.

NOTE: **For further instructions, see CMMV 33-20-01_DD704 (call light).**

(i) Remove and disassemble the light assembly 26-130 as follows:

NOTE: For further instructions, see CMMV 33-24-05_DD704 (light assembly).

1 Remove the lens 26-133, the housing 26-135, the incandescent lamp 26-137 and the lamp 26-138.

(j) Remove the loudspeaker 26-140 from the lavatory structure.

NOTE: For further instructions, see CMMV 23-31-12_D7320 (loudspeaker).

(k) Remove the screws 26-120 and the washers 26-030 from the lavatory structure.

(l) Remove the screws 26-440, the washers 26-450 and the nuts 26-460 from the lavatory structure.

(m) Remove the screws 26-480, 26-490, the nuts 26-500 and the sheet 26-470.

(n) Remove and disassemble the microswitch 26-150 as follows:

1 Remove the screws 26-230 and the microswitch 26-150.

WARNING: BE VERY CAREFUL WHEN YOU REMOVE OR INSTALL THE SPRING. BECAUSE THERE IS REMAINING TENSION IN THE SPRING, IT CAN CAUSE YOU INJURY.

2 Remove the spring 26-210.

3 Remove the screws 26-170, the threaded bushings 26-190 and the guide 26-200.

4 Remove the screws 26-180 and the door contact switch 26-160 from the support angle 26-220.

SUB TASK 25-41-51-040-076-J01
D2549020502800

9. Disassembly of the Electrical System (26-1)

NOTE: It is recommended that you only remove the components if they are damaged.

(a) Remove the screws 26-350, 26-360, the washers 26-380, the lock washers 26-410, the nuts 26-400 and the clamps 26-420, 26-430 from the lavatory structure.

(b) Remove the screws 26-350, 26-360, the washers 26-380, the lock washers 26-410 and the nuts 26-400 from the lavatory structure.

(c) Remove the nuts 26-390 and the washers 26-380 from the lavatory structure.

(d) Remove the screws 26-370 and the bonding strap 26-330 from the electrical components.

(e) Disconnect the cables, the applicable bonding straps 26-260, 26-270, 26-280, 26-290, 26-300, 26-310, 26-340 and the cable harness 26-010 from the electrical components.

(f) See Disassembly of the Cable Harness Assembly for the disassembly procedure of the cable harness 26-010.

(g) Remove the screws 26-040, the washers 26-030, the smoke detector 26-020 and the smoke detector sealing 26-050 from the lavatory structure.

NOTE: For further instructions, see CMMV 26-17-15_F4885 (smoke detector).

(h) Remove the brackets 26-110 from the lavatory structure.

(i) Remove the call light 26-100 from the lavatory structure.

NOTE: For further instructions, see CMMV 33-20-01_DD704 (call light).

(j) Remove and disassemble the light assembly 26-130 as follows:

NOTE: For further instructions, see CMMV 33-24-05_DD704 (light assembly).

1 Remove the lens 26-133, the housing 26-135, the incandescent lamp 26-137 and the lamp 26-138.

(k) Remove the loudspeaker 26-140 from the lavatory structure.

NOTE: For further instructions, see CMMV 23-31-12_D7320 (loudspeaker).

(l) Remove the screws 26-120 and the washers 26-030 from the lavatory structure.

(m) Remove the screws 26-440, the washers 26-450 and the nuts 26-460 from the lavatory structure.

(n) Remove the screws 26-480, 26-490, the nuts 26-500 and the sheet 26-470.

(o) Remove and disassemble the microswitch 26-150 as follows:

1 Remove the screws 26-230 and the microswitch 26-150.

WARNING: BE VERY CAREFUL WHEN YOU REMOVE OR INSTALL THE SPRING. BECAUSE THERE IS REMAINING TENSION IN THE SPRING, IT CAN CAUSE YOU INJURY.

2 Remove the spring 26-210.

3 Remove the screws 26-170, the threaded bushings 26-190 and the guide 26-200.

4 Remove the screws 26-180 and the door contact switch 26-160 from the support angle 26-220.

SUB TASK 25-41-51-040-076-K01
D2549010501400 R225401146-002

10. Disassembly of the Electrical System (26-1)

NOTE: It is recommended that you only remove the components if they are damaged.

(a) Remove the screws 26-350, 26-360, the washers 26-380, the lock washers 26-410, the nuts 26-400 and the clamps 26-420, 26-430 from the lavatory structure.

(b) Remove the screws 26-350, 26-360, the washers 26-380, the lock washers 26-410 and the nuts 26-400 from the lavatory structure.

(c) Remove the nuts 26-390 and the washers 26-380 from the lavatory structure.

(d) Remove the screws 26-370 and the bonding strap 26-320 from the electrical components.

(e) Disconnect the cables, the applicable bonding straps 26-260, 26-270, 26-280, 26-290, 26-300, 26-310, 26-340 and the cable harness 26-010 from the electrical components.

(f) See Disassembly of the Cable Harness Assembly for the disassembly procedure of the cable harness 26-010.

(g) Remove the screws 26-040, the washers 26-030, the smoke detector 26-020 and the smoke detector sealing 26-050 from the lavatory structure.

NOTE: For further instructions, see CMMV 26-16-16_F4885 (smoke detector).

(h) Remove the brackets 26-110 from the lavatory structure.

(i) Remove the call light 26-100 from the lavatory structure.

NOTE: For further instructions, see CMMV 33-20-01_DD704 (call light).

(j) Remove and disassemble the light assembly 26-130 as follows:

NOTE: For further instructions, see CMMV 33-24-05_DD704 (light assembly).

1 Remove the lens 26-133, the housing 26-135, the incandescent lamp 26-137 and the lamp 26-138.

(k) Remove the loudspeaker 26-140 from the lavatory structure.

NOTE: For further instructions, see CMMV 23-31-12_D7320 (loudspeaker).

(l) Remove the screws 26-120 and the washers 26-030 from the lavatory structure.

(m) Remove the screws 26-440, the washers 26-450 and the nuts 26-460 from the lavatory structure.

(n) Remove the screws 26-480, 26-490, the nuts 26-500 and the sheet 26-470.

(o) Remove and disassemble the microswitch 26-150 as follows:

1 Remove the screws 26-230 and the microswitch 26-150.

WARNING: BE VERY CAREFUL WHEN YOU REMOVE OR INSTALL THE SPRING. BECAUSE THERE IS REMAINING TENSION IN THE SPRING, IT CAN CAUSE YOU INJURY.

2 Remove the spring 26-210.

3 Remove the screws 26-170, the threaded bushings 26-190 and the guide 26-200.

4 Remove the screws 26-180 and the door contact switch 26-160 from the support angle 26-220.

SUB TASK 25-41-51-040-076-L01
D2549010500600 R225401146-000

11. Disassembly of the Electrical System (26-1)

NOTE: **It is recommended that you only remove the components if they are damaged.**

(a) Remove the screws 26-350, 26-360, the washers 26-380, the lock washers 26-410, the nuts 26-400 and the clamps 26-420, 26-430 from the lavatory structure.

(b) Remove the screws 26-350, 26-360, the washers 26-380, the lock washers 26-410 and the nuts 26-400 from the lavatory structure.

(c) Remove the nuts 26-390 and the washers 26-380 from the lavatory structure.

(d) Disconnect the cables, the applicable bonding straps 26-260, 26-270, 26-280, 26-290, 26-300, 26-310, 26-340 and the cable harness 26-010 from the electrical components.

(e) See Disassembly of the Cable Harness Assembly for the disassembly procedure of the cable harness 26-010.

(f) Remove the screws 26-040, the washers 26-030, the smoke detector 26-020 and the smoke detector sealing 26-050 from the lavatory structure.

NOTE: **For further instructions, see CMMV 26-16-16_F4885 (smoke detector).**

(g) Remove the brackets 26-110 from the lavatory structure.

(h) Remove the call light 26-100 from the lavatory structure.

NOTE: **For further instructions, see CMMV 33-20-01_DD704 (call light).**

(i) Remove and disassemble the light assembly 26-130 as follows:

NOTE: **For further instructions, see CMMV 33-24-05_DD704 (light assembly).**

1 Remove the lens 26-133, the housing 26-135, the incandescent lamp 26-137 and the lamp 26-138.

(j) Remove the loudspeaker 26-140 from the lavatory structure.

NOTE: For further instructions, see CMMV 23-31-12_D7320 (loudspeaker).

(k) Remove the screws 26-120 and the washers 26-030 from the lavatory structure.

(l) Remove the screws 26-440, the washers 26-450 and the nuts 26-460 from the lavatory structure.

(m) Remove the screws 26-480, 26-490, the nuts 26-500 and the sheet 26-470.

(n) Remove and disassemble the microswitch 26-150 as follows:

1 Remove the screws 26-230 and the microswitch 26-150.

WARNING: BE VERY CAREFUL WHEN YOU REMOVE OR INSTALL THE SPRING. BECAUSE THERE IS REMAINING TENSION IN THE SPRING, IT CAN CAUSE YOU INJURY.

2 Remove the spring 26-210.

3 Remove the screws 26-170, the threaded bushings 26-190 and the guide 26-200.

4 Remove the screws 26-180 and the door contact switch 26-160 from the support angle 26-220.

SUB TASK 25-41-51-040-076-M01
D2549010503400 D2549010506200 D2549010507000

12. Disassembly of the Electrical System (26-1)

NOTE: It is recommended that you only remove the components if they are damaged.

(a) Remove the screws 26-350, 26-360, the washers 26-380, the lock washers 26-410, the nuts 26-400 and the clamps 26-420, 26-430 from the lavatory structure.

(b) Remove the screws 26-350, 26-360, the washers 26-380, the lock washers 26-410 and the nuts 26-400 from the lavatory structure.

(c) Remove the nuts 26-390 and the washers 26-380 from the lavatory structure.

(d) Remove the screws 26-370 and the bonding straps 26-320, 26-330 from the electrical components.

(e) Disconnect the cables, the applicable bonding straps 26-260, 26-270, 26-280, 26-290, 26-300, 26-310, 26-340 and the cable harness assembly 26-010 from the electrical components.

(f) See Disassembly of the Cable Harness Assembly for the disassembly procedure of the cable harness assembly 26-010.

(g) Remove the screws 26-040, the washers 26-030, the smoke detector 26-020 and the smoke detector sealing 26-050 from the lavatory structure.

NOTE: For further instructions, see CMMV 26-17-17_F4885 (smoke detector).

(h) Remove the brackets 26-110 from the lavatory structure.

(i) Remove the call light 26-100 from the lavatory structure.

NOTE: For further instructions, see CMMV 33-20-01_DD704 (call light).

(j) Remove and disassemble the light assembly 26-130 as follows:

NOTE: For further instructions, see CMMV 33-24-05_DD704 (light assembly).

1 Remove the lens 26-133, the housing 26-135, the incandescent lamp 26-137 and the lamp 26-138.

(k) Remove the loudspeaker 26-140 from the lavatory structure.

NOTE: For further instructions, see CMMV 23-31-12_D7320 (loudspeaker).

(l) Remove the screws 26-120 and the washers 26-030 from the lavatory structure.

(m) Remove the screws 26-440, the washers 26-450 and the nuts 26-460 from the lavatory structure.

(n) Remove the screws 26-480, 26-490, the nuts 26-500 and the sheet 26-470.

(o) Remove the screws 26-230 and the microswitch 26-150.

SUB TASK 25-41-51-040-076-N01
D2549010500000 D2549010500800 D2549020500200 D2549020500400 D2549020500800

13. Disassembly of the Electrical System (26-1)

NOTE: **It is recommended that you only remove the components if they are damaged.**

(a) Remove the screws 26-350, 26-360, the washers 26-380, the lock washers 26-410, the nuts 26-400 and the clamps 26-420, 26-430 from the lavatory structure.

(b) Remove the screws 26-350, 26-360, the washers 26-380, the lock washers 26-410 and the nuts 26-400 from the lavatory structure.

(c) Remove the nuts 26-390 and the washers 26-380 from the lavatory structure.

(d) Disconnect the cables, the applicable bonding straps 26-260, 26-270, 26-280, 26-290, 26-300, 26-310, 26-340 and the cable harness 26-010 from the electrical components.

(e) See Disassembly of the Cable Harness Assembly for the disassembly procedure of the cable harness 26-010.

(f) Remove the screws 26-040, the washers 26-030, the smoke detector 26-020 and the smoke detector sealing 26-050 from the lavatory structure.

NOTE: **For further instructions, see CMMV 26-17-15_F4885 (smoke detector).**

(g) Remove the brackets 26-110 from the lavatory structure.

(h) Remove the call light 26-100 from the lavatory structure.

NOTE: **For further instructions, see CMMV 33-20-01_DD704 (call light).**

(i) Remove and disassemble the light assembly 26-130 as follows:

NOTE: **For further instructions, see CMMV 33-24-05_DD704 (light assembly).**

1 Remove the lens 26-133, the housing 26-135, the incandescent lamp 26-137 and the lamp 26-138.

(j) Remove the loudspeaker 26-140 from the lavatory structure.

NOTE: For further instructions, see CMMV 23-31-12_D7320 (loudspeaker).

(k) Remove the screws 26-120 and the washers 26-030 from the lavatory structure.

(l) Remove the screws 26-440, the washers 26-450 and the nuts 26-460 from the lavatory structure.

(m) Remove the screws 26-480, 26-490, the nuts 26-500 and the sheet 26-470.

(n) Remove and disassemble the microswitch 26-150 as follows:

1 Remove the screws 26-230 and the microswitch 26-150.

WARNING: BE VERY CAREFUL WHEN YOU REMOVE OR INSTALL THE SPRING. BECAUSE THERE IS REMAINING TENSION IN THE SPRING, IT CAN CAUSE YOU INJURY.

2 Remove the spring 26-210.

3 Remove the screws 26-170, the threaded bushings 26-190 and the guide 26-200.

4 Remove the screws 26-180 and the door contact switch 26-160 from the support angle 26-220.

TASK 25-41-51-000-821-B01
D2549010508000 D2549010508200 D2549020500000 D2549020500600 D2549020501000 D2549020501400 D2549020501800 D2549020503200 D2549020504800 D2549020505200 D2549020506000 D2549030501800 D2549030502400 R225401145-000

200. Disassembly of the Electrical System

A. General

A complete disassembly of the component is not necessary and not recommended.

Do not disassemble the component more than it is necessary for:

- Cleaning
- Visual Inspection
- Replacement of defective parts.

B. Job Set-up Information

(1) Not applicable

C. Procedure

WARNING: BE CAREFUL WHEN YOU USE SOLVENTS/CLEANING AGENTS, SEALANTS AND OTHER MATERIALS. OBEY THE MATERIAL MANUFACTURER'S INSTRUCTIONS AND THE LOCAL REGULATIONS. MAKE SURE THAT THERE IS A GOOD FLOW OF AIR THROUGH THE WORK AREA. DO NOT BREATHE THE FUMES. DO NOT SMOKE. DO NOT USE THESE MATERIALS NEAR A FLAME, SPARKS OR SOURCES OF HEAT. USE PROTECTIVE CLOTHING, GOGGLES AND GLOVES. IF YOU GET ONE OF THESE MATERIALS ON YOUR SKIN OR IN YOUR EYES, FLUSH IT AWAY WITH A FLOW OF CLEAN WATER. IF YOU GET ONE OF THESE MATERIALS IN YOUR MOUTH, GET IMMEDIATE MEDICAL AID. IN GENERAL, THESE MATERIALS ARE POISONOUS, FLAMMABLE AND SKIN IRRITANTS.

CAUTION: DO ALL THE WORK ON A CLEAN, SOFT SURFACE TO PREVENT DAMAGE TO THE COMPONENTS.

SUB TASK 25-41-51-040-077-A01
D2549020501800

1. Disassembly of the Electrical System (26A-1)

NOTE: **It is recommended that you only remove the components if they are damaged.**

(a) Remove the screws 26A-350, the washers 26A-370, the lock washers 26A-400, the nuts 26A-390 and the clamps 26A-410, 26A-420 from the lavatory structure.

(b) Remove the screws 26A-350, 26A-360, the washers 26A-370, the lock washers 26A-400 and the nuts 26A-390 from the lavatory structure.

(c) Remove the nuts 26A-380 and the washers 26A-370 from the lavatory structure.

(d) Disconnect the cables, the applicable bonding straps 26A-260, 26A-270, 26A-280, 26A-290, 26A-300, 26A-310, 26A-320 and the cable harness 26A-010 from the electrical components.

(e) See Disassembly of the Cable Harness Assembly for the disassembly procedure of the cable harness 26A-010.

(f) Remove the screws 26A-040, the washers 26A-030, the smoke detector 26A-020 and the smoke detector sealing 26A-050 from the lavatory structure.

NOTE: **For further instructions, see CMMV 26-16-16_F4885 (smoke detector).**

(g) Remove the brackets 26A-110 from the lavatory structure.

(h) Remove the call light 26A-100 from the lavatory structure.

NOTE: **For further instructions, see CMMV 33-20-01_DD704 (call light).**

(i) Remove and disassemble the light assembly 26A-130 as follows:

NOTE: **For further instructions, see CMMV 33-24-05_DD704 (light assembly).**

1 Remove the lens 26A-133, the housing 26A-135, the incandescent lamp 26A-137 and the lamp 26A-138.

(j) Remove the loudspeaker 26A-140 from the lavatory structure.

NOTE: **For further instructions, see CMMV 23-31-12_D7320 (loudspeaker).**

(k) Remove the screws 26A-120 and the washers 26A-030 from the lavatory structure.

(l) Remove the screws 26A-252, 26A-253, the nuts 26A-254 and the sheet 26A-251.

(m) Remove the screws 26A-230 and the microswitch 26A-150.

SUB TASK 25-41-51-040-077-B01
D2549010508200 R225401145-000

2. Disassembly of the Electrical System (26A-1)

NOTE: **It is recommended that you only remove the components if they are damaged.**

(a) Remove the screws 26A-350, the washers 26A-370, the lock washers 26A-400, the nuts 26A-390 and the clamps 26A-410, 26A-420 from the lavatory structure.

(b) Remove the screws 26A-350, 26A-360, the washers 26A-370, the lock washers 26A-400 and the nuts 26A-390 from the lavatory structure.

(c) Remove the nuts 26A-380 and the washers 26A-370 from the lavatory structure.

(d) Remove the washers 26A-375 and the bonding straps 26A-430, 26A-440 from the electrical components.

(e) Disconnect the cables, the applicable bonding straps 26A-260, 26A-270, 26A-280, 26A-290, 26A-300, 26A-310, 26A-320 and the cable harness assembly 26A-010 from the electrical components.

(f) See Disassembly of the Cable Harness Assembly for the disassembly procedure of the cable harness assembly 26A-010.

(g) Remove the screws 26A-040, the washers 26A-030, the smoke detector 26A-020 and the smoke detector sealing 26A-050 from the lavatory structure.

NOTE: **For further instructions, see CMMV 26-16-16_F4885 (smoke detector).**

(h) Remove the brackets 26A-110 from the lavatory structure.

(i) Remove the call light 26A-100 from the lavatory structure.

NOTE: **For further instructions, see CMMV 33-20-01_DD704 (call light).**

(j) Remove and disassemble the light assembly 26A-130 as follows:

NOTE: For further instructions, see CMMV 33-24-05_DD704 (light assembly).

1 Remove the lens 26A-133, the housing 26A-135, the incandescent lamp 26A-137 and the lamp 26A-138.

(k) Remove the loudspeaker 26A-140 from the lavatory structure.

NOTE: For further instructions, see CMMV 23-31-12_D7320 (loudspeaker).

(l) Remove the screws 26A-120 and the washers 26A-030 from the lavatory structure.

(m) Remove the screws 26A-252, 26A-253, the nuts 26A-254 and the sheet 26A-251.

(n) Remove the screws 26A-230 and the microswitch 26A-150.

SUB TASK 25-41-51-040-077-C01
D2549020503200 D2549020504800 D2549020505200 D2549020506000 D2549030501800 D2549030502400

3. Disassembly of the Electrical System (26A-1)

NOTE: It is recommended that you only remove the components if they are damaged.

(a) Remove the screws 26A-350, the washers 26A-370, the lock washers 26A-400, the nuts 26A-390 and the clamps 26A-410, 26A-420 from the lavatory structure.

(b) Remove the screws 26A-350, 26A-360, the washers 26A-370, the lock washers 26A-400 and the nuts 26A-390 from the lavatory structure.

(c) Remove the nuts 26A-380 and the washers 26A-370 from the lavatory structure.

(d) Remove the screw 26A-330, the washer 26A-340 and the bonding straps 26A-430, 26A-440 from the electrical components.

(e) Disconnect the cables, the applicable bonding straps 26A-260, 26A-270, 26A-280, 26A-290, 26A-300, 26A-310, 26A-320 and the cable harness assembly 26A-010 from the electrical components.

(f) See Disassembly of the Cable Harness Assembly for the disassembly procedure of the cable harness assembly 26A-010.

(g) Remove the screws 26A-040, the washers 26A-030, the smoke detector 26A-020 and the smoke detector sealing 26A-050 from the lavatory structure.

NOTE: For further instructions, see CMMV 26-17-15_F4885 (smoke detector).

(h) Remove the brackets 26A-110 from the lavatory structure.

(i) Remove the call light 26A-100 from the lavatory structure.

NOTE: For further instructions, see CMMV 33-20-01_DD704 (call light).

(j) Remove and disassemble the light assembly 26A-130 as follows:

NOTE: For further instructions, see CMMV 33-24-05_DD704 (light assembly).

1 Remove the lens 26A-133, the housing 26A-135, the incandescent lamp 26A-137 and the lamp 26A-138.

(k) Remove the loudspeaker 26A-140 from the lavatory structure.

NOTE: For further instructions, see CMMV 23-31-12_D7320 (loudspeaker).

(l) Remove the screws 26A-120 and the washers 26A-030 from the lavatory structure.

(m) Remove the screws 26A-252, 26A-253, the nuts 26A-254 and the sheet 26A-251.

(n) Remove the screws 26A-230 and the microswitch 26A-150.

SUB TASK 25-41-51-040-077-D01
D2549010508000

4. Disassembly of the Electrical System (26A-1)

NOTE: **See TABLE 3638 for the references for the replacement procedures of permanent installed parts.**

More data for bonded parts are given in column SEE REPAIR TASK. Use the data for the selection of the related repair solution.

IPL FIG. ITEM	COMPONENT PART NAME	IPL FIG. ITEM	REPLACEMENT PART NAME	SEE REPAIR TASK
26A-001 26A-450 26A-460 26A-490	Electrical System 2065VU Switch Panel Switch Housing Assembly Foil Assembly	26A-500 26A-510	Foil Adhesive Film	TBD self adhesive

Table 3638
Reference list for the replacement of permanent installed parts

NOTE: **It is recommended that you only remove the components if they are damaged.**

(a) Remove the screws 26A-350, the washers 26A-370, the lock washers 26A-400, the nuts 26A-390 and the clamps 26A-410, 26A-420 from the lavatory structure.

(b) Remove the screws 26A-350, 26A-360, the washers 26A-370, the lock washers 26A-400 and the nuts 26A-390 from the lavatory structure.

(c) Remove the nuts 26A-380 and the washers 26A-370 from the lavatory structure.

(d) Disconnect the cables, the applicable bonding straps 26A-260, 26A-270, 26A-280, 26A-290, 26A-300, 26A-310, 26A-320 and the cable harness assembly 26A-010 from the electrical components.

(e) See Disassembly of the Cable Harness Assembly for the disassembly procedure of the cable harness assembly 26A-010.

(f) Remove the screws 26A-040, the washers 26A-030, the smoke detector 26A-020 and the smoke detector sealing 26A-050 from the lavatory structure.

NOTE: **For further instructions, see CMMV 26-17-15_F4885 (smoke detector).**

(g) Remove the brackets 26A-110 from the lavatory structure.

(h) Remove the call light 26A-100 from the lavatory structure.

NOTE: For further instructions, see CMMV 33-20-01_DD704 (call light).

(i) Remove and disassemble the light assembly 26A-130 as follows:

NOTE: For further instructions, see CMMV 33-24-05_DD704 (light assembly).

1 Remove the lens 26A-133, the housing 26A-135, the incandescent lamp 26A-137 and the lamp 26A-138.

(j) Remove the loudspeaker 26A-140 from the lavatory structure.

NOTE: For further instructions, see CMMV 23-31-12_D7320 (loudspeaker).

(k) Remove and disassemble the 2065VU switch panel 26A-450 as follows:

1 Remove the plugs 26A-570 from the printed circuit board PCB 26A-520.

2 Remove and disassemble the switch housing assembly 26A-460 as follows:
a Remove the screws 26A-530, the spring washers 26A-540 and the switch housing 26A-470 from the printed circuit board PCB 26A-520.

3 Remove the protective lens 26A-560 from the switch button switch 26A-550.

4 Remove the switch button switch 26A-550 from the printed circuit board PCB 26A-520.

(l) Remove the screws 26A-120 and the washers 26A-030 from the lavatory structure.

(m) Remove the screws 26A-580, the washers 26A-590 and the nuts 26A-600 from the lavatory structure.

(n) Remove the screws 26A-252, 26A-253, the nuts 26A-254 and the sheet 26A-251.

(o) Remove the screws 26A-230 and the microswitch 26A-150.

SUB TASK 25-41-51-040-077-E01
D2549020500000 D2549020500600 D2549020501000 D2549020501400

5. Disassembly of the Electrical System (26A-1)

NOTE: **It is recommended that you only remove the components if they are damaged.**

(a) Remove the screws 26A-350, the washers 26A-370, the lock washers 26A-400, the nuts 26A-390 and the clamps 26A-410, 26A-420 from the lavatory structure.

(b) Remove the screws 26A-350, 26A-360, the washers 26A-370, the lock washers 26A-400 and the nuts 26A-390 from the lavatory structure.

(c) Remove the nuts 26A-380 and the washers 26A-370 from the lavatory structure.

(d) Remove the screw 26A-330 and the washer 26A-340 from the lavatory structure.

(e) Disconnect the cables, the applicable bonding straps 26A-260, 26A-270, 26A-280, 26A-290, 26A-300, 26A-310, 26A-320 and the cable harness 26A-010 from the electrical components.

(f) See Disassembly of the Cable Harness Assembly for the disassembly procedure of the cable harness 26A-010.

(g) Remove the screws 26A-040, the washers 26A-030, the smoke detector 26A-020 and the smoke detector sealing 26A-050 from the lavatory structure.

NOTE: **For further instructions, see CMMV 26-17-15_F4885 (smoke detector).**

(h) Remove the brackets 26A-110 from the lavatory structure.

(i) Remove the call light 26A-100 from the lavatory structure.

NOTE: **For further instructions, see CMMV 33-20-01_DD704 (call light).**

(j) Remove and disassemble the light assembly 26A-130 as follows:

NOTE: **For further instructions, see CMMV 33-24-05_DD704 (light assembly).**

1 Remove the lens 26A-133, the housing 26A-135, the incandescent lamp 26A-137 and the lamp 26A-138.

(k) Remove the loudspeaker 26A-140 from the lavatory structure.

NOTE: For further instructions, see CMMV 23-31-12_D7320 (loudspeaker).

(l) Remove the screws 26A-120 and the washers 26A-030 from the lavatory structure.

(m) Remove the screws 26A-252, 26A-253, the nuts 26A-254 and the sheet 26A-251.

(n) Remove and disassemble the microswitch 26A-150 as follows:

1 Remove the screws 26A-230 and the microswitch 26A-150.

WARNING: BE VERY CAREFUL WHEN YOU REMOVE OR INSTALL THE SPRING. BECAUSE THERE IS REMAINING TENSION IN THE SPRING, IT CAN CAUSE YOU INJURY.

2 Remove the spring 26A-210.

3 Remove the screws 26A-170, the threaded bushings 26A-190 and the guide 26A-200.

4 Remove the screws 26A-180 and the door contact switch 26A-160 from the support angle 26A-220.

TASK 25-41-51-000-821-C01
D2549010501800 D2549010502200 D2549010502400 D2549010509000 D2549020501200 D2549020602800 D2549030500400 D2549030501200 R225401134-000 R225401188-000 R225401188-002

201. Disassembly of the Electrical System

A. General

A complete disassembly of the component is not necessary and not recommended.

Do not disassemble the component more than it is necessary for:

- Cleaning
- Visual Inspection
- Replacement of defective parts.

B. Job Set-up Information

(1) Not applicable

C. Procedure

WARNING: BE CAREFUL WHEN YOU USE SOLVENTS/CLEANING AGENTS, SEALANTS AND OTHER MATERIALS. OBEY THE MATERIAL MANUFACTURER'S INSTRUCTIONS AND THE LOCAL REGULATIONS. MAKE SURE THAT THERE IS A GOOD FLOW OF AIR THROUGH THE WORK AREA. DO NOT BREATHE THE FUMES. DO NOT SMOKE. DO NOT USE THESE MATERIALS NEAR A FLAME, SPARKS OR SOURCES OF HEAT. USE PROTECTIVE CLOTHING, GOGGLES AND GLOVES. IF YOU GET ONE OF THESE MATERIALS ON YOUR SKIN OR IN YOUR EYES, FLUSH IT AWAY WITH A FLOW OF CLEAN WATER. IF YOU GET ONE OF THESE MATERIALS IN YOUR MOUTH, GET IMMEDIATE MEDICAL AID. IN GENERAL, THESE MATERIALS ARE POISONOUS, FLAMMABLE AND SKIN IRRITANTS.

CAUTION: DO ALL THE WORK ON A CLEAN, SOFT SURFACE TO PREVENT DAMAGE TO THE COMPONENTS.

SUB TASK 25-41-51-040-078-A01
D2549010501800 D2549020501200

1. Disassembly of the Electrical System (26B-1)

NOTE: **It is recommended that you only remove the components if they are damaged.**

(a) Remove the screws 26B-320, the washers 26B-350, the lock washers 26B-380, the nuts 26B-370 and the clamps 26B-390, 26B-400 from the lavatory structure.

(b) Remove the screws 26B-320, 26B-330, the washers 26B-350, the lock washers 26B-380 and the nuts 26B-370 from the lavatory structure.

(c) Remove the nuts 26B-350 and the washers 26B-360 from the lavatory structure.

(d) Remove the screws 26B-340 and the bonding straps 26B-290, 26B-300 from the electrical components.

(e) Disconnect the cables, the applicable bonding straps 26B-230, 26B-240, 26B-250, 26B-260, 26B-270, 26B-280, 26B-310 and the cable harness 26B-010 from the electrical components.

(f) See Disassembly of the Cable Harness Assembly for the disassembly procedure of the cable harness 26B-010.

(g) Remove the screws 26B-040, the washers 26B-030, the smoke detector 26B-020 and the smoke detector sealing 26B-050 from the lavatory structure.

NOTE: **For further instructions, see CMMV 26-17-17_F4885 (smoke detector).**

(h) Remove the brackets 26B-110 from the lavatory structure.

(i) Remove the call light 26B-100 from the lavatory structure.

NOTE: **For further instructions, see CMMV 33-20-01_DD704 (call light).**

(j) Remove and disassemble the light assembly 26B-130 as follows:

NOTE: **For further instructions, see CMMV 33-24-05_DD704 (light assembly).**

1 Remove the lens 26B-140, the housing 26B-150, the incandescent lamp 26B-160 and the lamp 26B-170.

(k) Remove the loudspeaker 26B-180 from the lavatory structure.

NOTE: **For further instructions, see CMMV 23-31-12_D7320 (loudspeaker).**

(l) Remove the screws 26B-120 and the washers 26B-030 from the lavatory structure.

(m) Remove the screws 26B-410, the washers 26B-420 and the nuts 26B-430 from the lavatory structure.

(n) Remove the screws 26B-450, 26B-460, the nuts 26B-470 and the sheet 26B-440.

(o) Remove the screws 26B-200 and the microswitch 26B-190.

SUB TASK 25-41-51-040-078-B01
D2549010502200

2. Disassembly of the Electrical System (26B-1)

NOTE: **It is recommended that you only remove the components if they are damaged.**

(a) Remove the screws 26B-320, the washers 26B-350, the lock washers 26B-380, the nuts 26B-370 and the clamps 26B-390, 26B-400 from the lavatory structure.

(b) Remove the screws 26B-320, 26B-330, the washers 26B-350, the lock washers 26B-380 and the nuts 26B-370 from the lavatory structure.

(c) Remove the nuts 26B-350 and the washers 26B-360 from the lavatory structure.

(d) Remove the screws 26B-340 and the bonding straps 26B-290, 26B-300 from the electrical components.

(e) Disconnect the cables, the applicable bonding straps 26B-230, 26B-240, 26B-250, 26B-260, 26B-270, 26B-280, 26B-310 and the cable harness 26B-010 from the electrical components.

(f) See Disassembly of the Cable Harness Assembly for the disassembly procedure of the cable harness 26B-010.

(g) Remove the screws 26B-040, the washers 26B-030, the smoke detector 26B-020 and the smoke detector sealing 26B-050 from the lavatory structure.

NOTE: **For further instructions, see CMMV 26-17-15_F4885 (smoke detector).**

(h) Remove the brackets 26B-110 from the lavatory structure.

(i) Remove the call light 26B-100 from the lavatory structure.

NOTE: For further instructions, see CMMV 33-20-01_DD704 (call light).

(j) Remove and disassemble the light assembly 26B-130 as follows:

NOTE: For further instructions, see CMMV 33-24-05_DD704 (light assembly).

1 Remove the lens 26B-140, the housing 26B-150, the incandescent lamp 26B-160 and the lamp 26B-170.

(k) Remove the loudspeaker 26B-180 from the lavatory structure.

NOTE: For further instructions, see CMMV 23-31-12_D7320 (loudspeaker).

(l) Remove the screws 26B-120 and the washers 26B-030 from the lavatory structure.

(m) Remove the screws 26B-410, the washers 26B-420 and the nuts 26B-430 from the lavatory structure.

(n) Remove the screws 26B-450, 26B-460, the nuts 26B-470 and the sheet 26B-440.

(o) Remove the screws 26B-200 and the microswitch 26B-190.

SUB TASK 25-41-51-040-078-C01
D2549010502400

3. Disassembly of the Electrical System (26B-1)

NOTE: It is recommended that you only remove the components if they are damaged.

(a) Remove the screws 26B-320, the washers 26B-350, the lock washers 26B-380, the nuts 26B-370 and the clamps 26B-390, 26B-400 from the lavatory structure.

(b) Remove the screws 26B-320, 26B-330, the washers 26B-350, the lock washers 26B-380 and the nuts 26B-370 from the lavatory structure.

(c) Remove the nuts 26B-350 and the washers 26B-360 from the lavatory structure.

(d) Remove the screws 26B-340 and the bonding straps 26B-290, 26B-300 from the electrical components.

(e) Disconnect the cables, the applicable bonding straps 26B-230, 26B-240, 26B-250, 26B-260, 26B-270, 26B-280, 26B-310 and the cable harness 26B-010 from the electrical components.

(f) See Disassembly of the Cable Harness Assembly for the disassembly procedure of the cable harness 26B-010.

(g) Remove the screws 26B-040, the washers 26B-030, the smoke detector 26B-020 and the smoke detector sealing 26B-050 from the lavatory structure.

NOTE: For further instructions, see CMMV 26-17-15_F4885 (smoke detector).

(h) Remove the brackets 26B-110 from the lavatory structure.

(i) Remove the call light 26B-100 from the lavatory structure.

NOTE: For further instructions, see CMMV 33-20-01_DD704 (call light).

(j) Remove and disassemble the light assembly 26B-130 as follows:

NOTE: For further instructions, see CMMV 33-24-05_DD704 (light assembly).

1 Remove the lens 26B-140, the housing 26B-150, the incandescent lamp 26B-160 and the lamp 26B-170.

(k) Remove the loudspeaker 26B-180 from the lavatory structure.

NOTE: For further instructions, see CMMV 23-31-12_D7320 (loudspeaker).

(l) Remove the screws 26B-120 and the washers 26B-030 from the lavatory structure.

(m) Remove the screws 26B-410, the washers 26B-420 and the nuts 26B-430 from the lavatory structure.

(n) Remove the screws 26B-450, 26B-460, the nuts 26B-470 and the sheet 26B-440.

(o) Remove and disassemble the microswitch 26B-190 as follows:

1 Remove the screws 26B-200 and the microswitch 26B-190.

WARNING: **BE VERY CAREFUL WHEN YOU REMOVE OR INSTALL THE SPRING. BECAUSE THERE IS REMAINING TENSION IN THE SPRING, IT CAN CAUSE YOU INJURY.**

2 Remove the spring 26B-197.

3 Remove the screws 26B-193, the threaded bushings 26B-195 and the guide 26B-196.

4 Remove the screws 26B-194 and the door contact switch 26B-192 from the support angle 26B-198.

SUB TASK 25-41-51-040-078-D01
D2549010509000 D2549020602800 D2549030500400 D2549030501200 R225401134-000 R225401188-000 R225401188-002

4. Disassembly of the Electrical System (26B-1)

NOTE: **It is recommended that you only remove the components if they are damaged.**

(a) Remove the screws 26B-320, the washers 26B-350, the lock washers 26B-380, the nuts 26B-370 and the clamps 26B-390, 26B-400 from the lavatory structure.

(b) Remove the screws 26B-320, 26B-330, the washers 26B-350, the lock washers 26B-380 and the nuts 26B-370 from the lavatory structure.

(c) Remove the nuts 26B-350 and the washers 26B-360 from the lavatory structure.

(d) Remove the screws 26B-340 and the bonding straps 26B-290, 26B-300 from the electrical components.

(e) Disconnect the cables, the applicable bonding straps 26B-230, 26B-240, 26B-250, 26B-260, 26B-270, 26B-280, 26B-310 and the cable harness assembly 26B-010 from the electrical components.

(f) See Disassembly of the Cable Harness Assembly for the disassembly procedure of the cable harness assembly 26B-010.

(g) Remove the screws 26B-040, the washers 26B-030, the smoke detector 26B-020 and the smoke detector sealing 26B-050 from the lavatory structure.

NOTE: **For further instructions, see CMMV 26-16-16_F4885 (smoke detector).**

(h) Remove the brackets 26B-110 from the lavatory structure.

(i) Remove the call light 26B-100 from the lavatory structure.

NOTE: For further instructions, see CMMV 33-20-01_DD704 (call light).

(j) Remove and disassemble the light assembly 26B-130 as follows:

NOTE: For further instructions, see CMMV 33-24-05_DD704 (light assembly).

1 Remove the lens 26B-140, the housing 26B-150, the incandescent lamp 26B-160 and the lamp 26B-170.

(k) Remove the loudspeaker 26B-180 from the lavatory structure.

NOTE: For further instructions, see CMMV 23-31-12_D7320 (loudspeaker).

(l) Remove the screws 26B-120 and the washers 26B-030 from the lavatory structure.

(m) Remove the screws 26B-410, the washers 26B-420 and the nuts 26B-430 from the lavatory structure.

(n) Remove the screws 26B-450, 26B-460, the nuts 26B-470 and the sheet 26B-440.

(o) Remove the screws 26B-200 and the microswitch 26B-190.

TASK 25-41-51-000-821-D01

D2549010509400 D2549010509600 D2549010509800 D2549010510000 D2549010510200 D2549010510400 D2549010510800 D2549010511000 D2549010511400 D2549010511600 D2549010511800 D2549010512000 D2549010512200 D2549010512400 D2549010512600 D2549010513000 D2549010513200 D2549010513400 D2549010513800 D2549010514000 D2549010514200 D2549010514400 D2549010514800 D2549010600000 D2549010600200 D2549010600400 D2549010600600 D2549010601000 D2549010601200 D2549010601600 D2549010601800 D2549010602000 D2549010602200 D2549010602400 D2549010602600 D2549010602800 D2549020506200 D2549020506400 D2549020506600 D2549020506800 D2549020507000 D2549020507200 D2549020602200 D2549020604200 D2549020604400 D2549020604600 D2549020604800 D2549020605000 D2549020605200 D2549020605400 D2549020605600 D2549020606000 D2549020606800 D2549020607000 D2549020607400 D2549020607600 D2549020607800 D2549020608200 D2549020608400 D2549020608600 D2549020608800 D2549020609000 D2549020609200 D2549020609400 D2549020609600 D2549020609800 D2549020610000 D2549020610200 D2549020610400 D2549020610600 D2549020610800 D2549020611000 D2549020611200 D2549020611400 D2549020611600 D2549020611800 D2549020612000 D2549020612200 D2549020612400 D2549020612600 D2549020612800 D2549020613000 D2549020613200 D2549020613600 D2549020613800 D2549020614000 D2549020614400 D2549020614600 D2549020614800 D2549020700000 D2549020700400 D2549020700600 D2549020700800 D2549020701000 D2549020701200 D2549020701400 D2549020701800 D2549020702000 D2549020702200 D2549020702400 D2549020702600 D2549020702800 D2549020703200 D2549020703400 D2549020703600 D2549020703800 D2549020704000 D2549020704200 D2549020704400 D2549020704600 D2549020705400 D2549020705600 D2549020706000 D2549020706800 D2549030504000 D2549030504200 D2549030504600 D2549030504800 D2549030505200 D2549030505400 D2549030505600 D2549030505800 D2549030506000 D2549030506200 D2549030506400 D2549030506600 D2549030506800 D2549030507000 D2549030507200 D2549030507400 D2549030507600 D2549030507800 D2549030508000 D2549030508200 D2549030508400 D2549030508600 D2549030508800 D2549030509000 D2549030509200 D2549030509400 D2549030509600 D2549030510000 D2549030510200 D2549030510600 D2549030510800 D2549030511000 D2549030511200 D2549030511400 D2549030511600 D2549030511800 D2549030512000 D2549030512200 D2549030512400 D2549030512800 D2549030513400 D2549030513600 D2549030513800 D2549030514000 D2549030514200 D2549030514400 D2549030600000 D2549030600800 D2549030601400 R225401107-004 R225401134-002 R225401134-004 R225401134-006 R225401134-016 R225401136-016 R225401137-000 R225401137-002 R225401137-004 R225401137-006 R225401137-008 R225401137-010 R225401137-012 R225401137-014 R225401142-000 R225401142-002 R225401152-000 R225401153-000 R225401159-000 R225401160-002 R225401168-004 R225401168-006 R225401168-016 R225401172-002 R225401172-004 R225401175-000 R225401175-002 R225401176-000

202. Disassembly of the Electrical System

A. General

A complete disassembly of the component is not necessary and not recommended.

Do not disassemble the component more than it is necessary for:

- Cleaning
- Visual Inspection
- Replacement of defective parts.

B. Job Set-up Information

(1) Not applicable

C. Procedure

WARNING: **BE CAREFUL WHEN YOU USE SOLVENTS/CLEANING AGENTS, SEALANTS AND OTHER MATERIALS. OBEY THE MATERIAL MANUFACTURER'S INSTRUCTIONS AND THE LOCAL REGULATIONS. MAKE SURE THAT THERE IS A GOOD FLOW OF AIR THROUGH THE WORK AREA. DO NOT BREATHE THE FUMES. DO NOT SMOKE. DO NOT USE THESE MATERIALS NEAR A FLAME, SPARKS OR SOURCES OF HEAT. USE PROTECTIVE CLOTHING, GOGGLES AND GLOVES. IF YOU GET ONE OF THESE MATERIALS ON YOUR SKIN OR IN YOUR EYES, FLUSH IT AWAY WITH A FLOW OF CLEAN WATER. IF YOU GET ONE OF THESE MATERIALS IN YOUR MOUTH, GET IMMEDIATE MEDICAL AID. IN GENERAL, THESE MATERIALS ARE POISONOUS, FLAMMABLE AND SKIN IRRITANTS.**

CAUTION: **DO ALL THE WORK ON A CLEAN, SOFT SURFACE TO PREVENT DAMAGE TO THE COMPONENTS.**

SUB TASK 25-41-51-040-079-A01
D2549010514800 D2549010601600 D2549010601800 D2549010602200 D2549010602600 D2549010602800 D2549020614800 D2549020700400 D2549020700600 D2549020700800 D2549020702200 D2549020702400 D2549020702600 D2549020702800 D2549020703400 D2549020703800 D2549020704400 D2549020705600 D2549020706000 D2549020706800 D2549030507000 D2549030508000 D2549030508200 D2549030510000 D2549030510200 D2549030511400 D2549030512400 D2549030512800 D2549030513400 D2549030513600 D2549030514000 D2549030514200 D2549030600800 D2549030601400 R225401137-006 R225401137-008 R225401137-014 R225401142-002 R225401152-000 R225401153-000 R225401168-006 R225401168-016 R225401172-002 R225401172-004

1. Disassembly of the Electrical System (26C-1)

NOTE: **It is recommended that you only remove the components if they are damaged.**

(a) Remove the screw 26C-280, the washer 26C-290, the nut 26C-300 and the clamp 26C-310 from the lavatory structure.

(b) Remove the nut 26C-300 and the washer 26C-290 from the lavatory structure.

(c) Remove the ami cabin attendant seat cable 26C-350 as follows:

1 Remove the plug connectors 26C-354, 26C-356, the connector backshell 26C-355 and the ami cabin attendant seat cable 26C-350 from the lavatory structure.

(d) Disconnect the cables, the applicable bonding straps 26C-230, 26C-240, 26C-250, 26C-260, 26C-270 and the cable harness assembly 26C-010 from the electrical components.

(e) See Disassembly of the Cable Harness Assembly for the disassembly procedure of the cable harness assembly 26C-010.

(f) Remove the screws 26C-040, the washers 26C-030, the smoke detector 26C-020 and the smoke detector sealing 26C-050 from the lavatory structure.

NOTE: **For further instructions, see CMMV 26-16-16_F4885 (smoke detector).**

(g) Remove the screws 26C-120 and the bracket 26C-110 from the lavatory structure.

(h) Remove the screws 26C-120, the washers 26C-030 and the bracket 26C-110 from the lavatory structure.

(i) Remove the call light 26C-100 from the lavatory structure.

NOTE: **For further instructions, see CMMV 33-20-01_DD704 (call light).**

(j) Remove and disassemble the light assembly 26C-130 as follows:

NOTE: **For further instructions, see CMMV 33-24-05_DD704 (light assembly).**

1 Remove the lens 26C-140, the housing 26C-150, the incandescent lamp 26C-160 and the lamp 26C-170.

(k) Remove the loudspeaker 26C-180 from the lavatory structure.

NOTE: For further instructions, see CMMV 23-31-12_D7320 (loudspeaker).

(l) Remove the screws 26C-120, 26C-330, the washers 26C-030, 26C-320 and the nuts 26C-340 from the lavatory structure.

(m) Remove the screws 26C-200 and the microswitch 26C-190.

SUB TASK 25-41-51-040-079-B01
D2549010513000 D2549010601200

2. Disassembly of the Electrical System (26C-1)

NOTE: It is recommended that you only remove the components if they are damaged.

(a) Remove the screw 26C-280, the washer 26C-290, the nut 26C-300 and the clamp 26C-310 from the lavatory structure.

(b) Remove the nut 26C-300 and the washer 26C-290 from the lavatory structure.

(c) Remove the ami cabin attendant seat cable 26C-350 as follows:

1 Remove the plug connectors 26C-354, 26C-356, the connector backshell 26C-355 and the ami cabin attendant seat cable 26C-350 from the lavatory structure.

(d) Disconnect the cables, the applicable bonding straps 26C-230, 26C-240, 26C-250, 26C-260, 26C-270 and the cable harness assembly 26C-010 from the electrical components.

(e) See Disassembly of the Cable Harness Assembly for the disassembly procedure of the cable harness assembly 26C-010.

(f) Remove the screws 26C-040, the washers 26C-030, the smoke detector 26C-020 and the smoke detector sealing 26C-050 from the lavatory structure.

NOTE: For further instructions, see CMMV 26-17-15_F4885 (smoke detector).

(g) Remove the screws 26C-120 and the bracket 26C-110 from the lavatory structure.

(h) Remove the screws 26C-120, the washers 26C-030 and the bracket 26C-110 from the lavatory structure.

(i) Remove the call light 26C-100 from the lavatory structure.

NOTE: For further instructions, see CMMV 33-20-01_DD704 (call light).

(j) Remove and disassemble the light assembly 26C-130 as follows:

NOTE: For further instructions, see CMMV 33-24-05_DD704 (light assembly).

1 Remove the lens 26C-140, the housing 26C-150, the incandescent lamp 26C-160 and the lamp 26C-170.

(k) Remove the loudspeaker 26C-180 from the lavatory structure.

NOTE: For further instructions, see CMMV 23-31-12_D7320 (loudspeaker).

(l) Remove the screws 26C-120, 26C-330, the washers 26C-030, 26C-320 and the nuts 26C-340 from the lavatory structure.

(m) Remove the screws 26C-200 and the microswitch 26C-190.

SUB TASK 25-41-51-040-079-C01

D2549010509600 D2549010509800 D2549010510000 D2549010510200
D2549010510800 D2549010511000 D2549010511400 D2549010511600
D2549010511800 D2549010512000 D2549010512400 D2549010512600
D2549010513200 D2549010513400 D2549010513800 D2549010514200
D2549010514400 D2549010600000 D2549010600200 D2549010600400
D2549010600600 D2549010601000 D2549010602400 D2549020506800
D2549020602200 D2549020604200 D2549020604400 D2549020604600
D2549020604800 D2549020605000 D2549020605200 D2549020605400
D2549020606000 D2549020606800 D2549020607000 D2549020607400
D2549020607600 D2549020607800 D2549020608400 D2549020608600
D2549020608800 D2549020609000 D2549020609200 D2549020609400
D2549020609600 D2549020609800 D2549020610000 D2549020610400
D2549020610600 D2549020610800 D2549020611000 D2549020611200
D2549020611400 D2549020611600 D2549020611800 D2549020612000
D2549020612400 D2549020612600 D2549020612800 D2549020613000
D2549020613200 D2549020613800 D2549020614000 D2549020614400
D2549020701200 D2549020701400 D2549020701800 D2549020702000
D2549020703200 D2549020703600 D2549020704000 D2549020704200
D2549020704600 D2549030504000 D2549030504200 D2549030504600
D2549030504800 D2549030505200 D2549030505600 D2549030505800
D2549030506000 D2549030506200 D2549030506400 D2549030506800
D2549030507200 D2549030507400 D2549030507600 D2549030508400
D2549030508600 D2549030508800 D2549030509000 D2549030509200
D2549030509400 D2549030509600 D2549030510600 D2549030510800

D2549030511200 D2549030511800 D2549030514400 R225401107-004 R225401136-016 R225401137-000 R225401137-002 R225401137-004 R225401137-010 R225401137-012 R225401142-000 R225401159-000 R225401160-002 R225401168-004 R225401175-000 R225401175-002 R225401176-000

3. Disassembly of the Electrical System (26C-1)

NOTE: **It is recommended that you only remove the components if they are damaged.**

(a) Remove the screw 26C-280, the washer 26C-290, the nut 26C-300 and the clamp 26C-310 from the lavatory structure.

(b) Remove the nut 26C-300 and the washer 26C-290 from the lavatory structure.

(c) Remove the ami cabin attendant seat cable 26C-350 as follows:

1 Remove the plug connectors 26C-354, 26C-356, the connector backshell 26C-355 and the ami cabin attendant seat cable 26C-350 from the lavatory structure.

(d) Disconnect the cables, the applicable bonding straps 26C-230, 26C-240, 26C-250, 26C-260, 26C-270 and the cable harness assembly 26C-010 from the electrical components.

(e) See Disassembly of the Cable Harness Assembly for the disassembly procedure of the cable harness assembly 26C-010.

(f) Remove the screws 26C-040, the washers 26C-030, the smoke detector 26C-020 and the smoke detector sealing 26C-050 from the lavatory structure.

NOTE: **For further instructions, see CMMV 26-17-15_F4885 (smoke detector).**

(g) Remove the screws 26C-120 and the bracket 26C-111 from the lavatory structure.

(h) Remove the screws 26C-120, the washers 26C-030 and the bracket 26C-115 from the lavatory structure.

(i) Remove the call light 26C-100 from the lavatory structure.

NOTE: **For further instructions, see CMMV 33-20-01_DD704 (call light).**

(j) Remove and disassemble the light assembly 26C-130 as follows:

NOTE: For further instructions, see CMMV 33-24-05_DD704 (light assembly).

1 Remove the lens 26C-140, the housing 26C-150, the incandescent lamp 26C-160 and the lamp 26C-170.

(k) Remove the loudspeaker 26C-180 from the lavatory structure.

NOTE: For further instructions, see CMMV 23-31-12_D7320 (loudspeaker).

(l) Remove the screws 26C-120, 26C-330, the washers 26C-030, 26C-320 and the nuts 26C-340 from the lavatory structure.

(m) Remove the screws 26C-200 and the microswitch 26C-190.

SUB TASK 25-41-51-040-079-D01
D2549020506600 D2549020605600 D2549020608200 D2549020613600 D2549030507800 R225401134-002 R225401134-004 R225401134-006 R225401134-016

4. Disassembly of the Electrical System (26C-1)

NOTE: It is recommended that you only remove the components if they are damaged.

(a) Remove the screw 26C-280, the washer 26C-290, the nut 26C-300 and the clamp 26C-310 from the lavatory structure.

(b) Remove the nut 26C-300 and the washer 26C-290 from the lavatory structure.

(c) Remove the ami cabin attendant seat cable 26C-350 as follows:

1 Remove the plug connectors 26C-354, 26C-356, the connector backshell 26C-355 and the ami cabin attendant seat cable 26C-350 from the lavatory structure.

(d) Disconnect the cables, the applicable bonding straps 26C-230, 26C-240, 26C-250, 26C-260, 26C-270 and the cable harness assembly 26C-010 from the electrical components.

(e) See Disassembly of the Cable Harness Assembly for the disassembly procedure of the cable harness assembly 26C-010.

(f) Remove the screws 26C-040, the washers 26C-030, the smoke detector 26C-020 and the smoke detector sealing 26C-050 from the lavatory structure.

NOTE: For further instructions, see CMMV 26-16-16_F4885 (smoke detector).

(g) Remove the screws 26C-120 and the bracket 26C-111 from the lavatory structure.

(h) Remove the screws 26C-120, the washers 26C-030 and the bracket 26C-115 from the lavatory structure.

(i) Remove the call light 26C-100 from the lavatory structure.

NOTE: For further instructions, see CMMV 33-20-01_DD704 (call light).

(j) Remove and disassemble the light assembly 26C-130 as follows:

NOTE: For further instructions, see CMMV 33-24-05_DD704 (light assembly).

1 Remove the lens 26C-140, the housing 26C-150, the incandescent lamp 26C-160 and the lamp 26C-170.

(k) Remove the loudspeaker 26C-180 from the lavatory structure.

NOTE: For further instructions, see CMMV 23-31-12_D7320 (loudspeaker).

(l) Remove the screws 26C-120, 26C-330, the washers 26C-030, 26C-320 and the nuts 26C-340 from the lavatory structure.

(m) Remove the screws 26C-200 and the microswitch 26C-190.

SUB TASK 25-41-51-040-079-E01
D2549020614600 D2549020700000 D2549030512000 D2549030512200 D2549030600000

5. Disassembly of the Electrical System (26C-1)

NOTE: **See TABLE 3639 for the references for the replacement procedures of permanent installed parts.**

More data for bonded parts are given in column SEE REPAIR TASK. Use the data for the selection of the related repair solution.

IPL FIG. ITEM	COMPONENT PART NAME	IPL FIG. ITEM	REPLACEMENT PART NAME	SEE REPAIR TASK
26C-001 26C-380 26C-390 26C-420	Electrical System 2065VU Switch Panel Switch Housing Assembly Foil Assembly	26C-430 26C-440	Foil Adhesive Film	TBD self adhesive

Table 3639
Reference list for the replacement of permanent installed parts

NOTE: **It is recommended that you only remove the components if they are damaged.**

(a) Remove the screw 26C-280, the washer 26C-290, the nut 26C-300 and the clamp 26C-310 from the lavatory structure.

(b) Remove the nut 26C-300 and the washer 26C-290 from the lavatory structure.

(c) Remove the ami cabin attendant seat cable 26C-350 as follows:

1 Remove the plug connectors 26C-354, 26C-356, the connector backshell 26C-355 and the ami cabin attendant seat cable 26C-350 from the lavatory structure.

(d) Disconnect the cables, the applicable bonding straps 26C-230, 26C-240, 26C-250, 26C-260, 26C-270 and the cable harness assembly 26C-010 from the electrical components.

(e) See Disassembly of the Cable Harness Assembly for the disassembly procedure of the cable harness assembly 26C-010.

(f) Remove the screws 26C-040, the washers 26C-030, the smoke detector 26C-020 and the smoke detector sealing 26C-050 from the lavatory structure.

NOTE: For further instructions, see CMMV 26-16-16_F4885 (smoke detector).

(g) Remove the screws 26C-120 and the bracket 26C-110 from the lavatory structure.

(h) Remove the screws 26C-120, the washers 26C-030 and the bracket 26C-110 from the lavatory structure.

(i) Remove the call light 26C-100 from the lavatory structure.

NOTE: For further instructions, see CMMV 33-20-01_DD704 (call light).

(j) Remove and disassemble the light assembly 26C-130 as follows:

NOTE: For further instructions, see CMMV 33-24-05_DD704 (light assembly).

1 Remove the lens 26C-140, the housing 26C-150, the incandescent lamp 26C-160 and the lamp 26C-170.

(k) Remove the loudspeaker 26C-180 from the lavatory structure.

NOTE: For further instructions, see CMMV 23-31-12_D7320 (loudspeaker).

(l) Remove and disassemble the 2065VU switch panel 26C-380 as follows:

1 Remove the plugs 26C-500 from the printed circuit board PCB 26C-450.

2 Remove and disassemble the switch housing assembly 26C-390 as follows:

a Remove the screws 26C-460, the spring washers 26C-470 and the switch housing 26C-400 from the printed circuit board PCB 26C-450.

3 Remove the protective lens 26C-490 from the switch button switch 26C-480.

4 Remove the switch button switch 26C-480 from the printed circuit board PCB 26C-450.

(m) Remove the screws 26C-120, 26C-330, the washers 26C-030, 26C-320 and the nuts 26C-340 from the lavatory structure.

(n) Remove the screws 26C-200 and the microswitch 26C-190.

SUB TASK 25-41-51-040-079-F01
D2549010509400 D2549010512200 D2549020610200 D2549020612200 D2549020705400

6. Disassembly of the Electrical System (26C-1)

NOTE: **See TABLE 3640 for the references for the replacement procedures of permanent installed parts.**

More data for bonded parts are given in column SEE REPAIR TASK. Use the data for the selection of the related repair solution.

IPL FIG. ITEM	COMPONENT PART NAME	IPL FIG. ITEM	REPLACEMENT PART NAME	SEE REPAIR TASK
26C-001 26C-380 26C-390 26C-420	Electrical System 2065VU Switch Panel Switch Housing Assembly Foil Assembly	26C-430 26C-440	Foil Adhesive Film	TBD self adhesive

Table 3640
Reference list for the replacement of permanent installed parts

NOTE: **It is recommended that you only remove the components if they are damaged.**

(a) Remove the screw 26C-280, the washer 26C-290, the nut 26C-300 and the clamp 26C-310 from the lavatory structure.

(b) Remove the nut 26C-300 and the washer 26C-290 from the lavatory structure.

(c) Remove the ami cabin attendant seat cable 26C-350 as follows:

1 Remove the plug connectors 26C-354, 26C-356, the connector backshell 26C-355 and the ami cabin attendant seat cable 26C-350 from the lavatory structure.

(d) Disconnect the cables, the applicable bonding straps 26C-230, 26C-240, 26C-250, 26C-260, 26C-270 and the cable harness assembly 26C-010 from the electrical components.

(e) See Disassembly of the Cable Harness Assembly for the disassembly procedure of the cable harness assembly 26C-010.

(f) Remove the screws 26C-040, the washers 26C-030, the smoke detector 26C-020 and the smoke detector sealing 26C-050 from the lavatory structure.

NOTE: For further instructions, see CMMV 26-17-17_F4885 (smoke detector).

(g) Remove the screws 26C-120 and the bracket 26C-111 from the lavatory structure.

(h) Remove the screws 26C-120, the washers 26C-030 and the bracket 26C-115 from the lavatory structure.

(i) Remove the call light 26C-100 from the lavatory structure.

NOTE: For further instructions, see CMMV 33-20-01_DD704 (call light).

(j) Remove and disassemble the light assembly 26C-130 as follows:

NOTE: For further instructions, see CMMV 33-24-05_DD704 (light assembly).

1 Remove the lens 26C-140, the housing 26C-150, the incandescent lamp 26C-160 and the lamp 26C-170.

(k) Remove the loudspeaker 26C-180 from the lavatory structure.

NOTE: For further instructions, see CMMV 23-31-12_D7320 (loudspeaker).

(l) Remove and disassemble the 2065VU switch panel 26C-380 as follows:

1 Remove the plugs 26C-500 from the printed circuit board PCB 26C-450.

2 Remove and disassemble the switch housing assembly 26C-390 as follows:
a Remove the screws 26C-460, the spring washers 26C-470 and the switch housing 26C-400 from the printed circuit board PCB 26C-450.

3 Remove the protective lens 26C-490 from the switch button switch 26C-480.

4 Remove the switch button switch 26C-480 from the printed circuit board PCB 26C-450.

(m) Remove the screws 26C-120, 26C-330, the washers 26C-030, 26C-320 and the nuts 26C-340 from the lavatory structure.

(n) Remove the screws 26C-200 and the microswitch 26C-190.

SUB TASK 25-41-51-040-079-G01
D2549010510400 D2549030511600

7. Disassembly of the Electrical System (26C-1)

NOTE: See TABLE 3641 for the references for the replacement procedures of permanent installed parts.

More data for bonded parts are given in column SEE REPAIR TASK. Use the data for the selection of the related repair solution.

IPL FIG. ITEM	COMPONENT PART NAME	IPL FIG. ITEM	REPLACEMENT PART NAME	SEE REPAIR TASK
26C-001 26C-380 26C-390 26C-420	Electrical System 2065VU Switch Panel Switch Housing Assembly Foil Assembly	26C-430 26C-440	Foil Adhesive Film	TBD self adhesive

Table 3641
Reference list for the replacement of permanent installed parts

NOTE: It is recommended that you only remove the components if they are damaged.

(a) Remove the screw 26C-280, the washer 26C-290, the nut 26C-300 and the clamp 26C-310 from the lavatory structure.

(b) Remove the nut 26C-300 and the washer 26C-290 from the lavatory structure.

(c) Remove the ami cabin attendant seat cable 26C-350 as follows:

1 Remove the plug connectors 26C-354, 26C-356, the connector backshell 26C-355 and the ami cabin attendant seat cable 26C-350 from the lavatory structure.

(d) Disconnect the cables, the applicable bonding straps 26C-230, 26C-240, 26C-250, 26C-260, 26C-270 and the cable harness assembly 26C-010 from the electrical components.

(e) See Disassembly of the Cable Harness Assembly for the disassembly procedure of the cable harness assembly 26C-010.

(f) Remove the screws 26C-040, the washers 26C-030, the smoke detector 26C-020 and the smoke detector sealing 26C-050 from the lavatory structure.

NOTE: For further instructions, see CMMV 26-17-15_F4885 (smoke detector).

(g) Remove the screws 26C-120 and the bracket 26C-111 from the lavatory structure.

(h) Remove the screws 26C-120, the washers 26C-030 and the bracket 26C-115 from the lavatory structure.

(i) Remove the call light 26C-100 from the lavatory structure.

NOTE: For further instructions, see CMMV 33-20-01_DD704 (call light).

(j) Remove and disassemble the light assembly 26C-130 as follows:

NOTE: For further instructions, see CMMV 33-24-05_DD704 (light assembly).

1 Remove the lens 26C-140, the housing 26C-150, the incandescent lamp 26C-160 and the lamp 26C-170.

(k) Remove the loudspeaker 26C-180 from the lavatory structure.

NOTE: For further instructions, see CMMV 23-31-12_D7320 (loudspeaker).

(l) Remove and disassemble the 2065VU switch panel 26C-380 as follows:

1 Remove the plugs 26C-500 from the printed circuit board PCB 26C-450.

2 Remove and disassemble the switch housing assembly 26C-390 as follows:

a Remove the screws 26C-460, the spring washers 26C-470 and the switch housing 26C-400 from the printed circuit board PCB 26C-450.

3 Remove the protective lens 26C-490 from the switch button switch 26C-480.

4 Remove the switch button switch 26C-480 from the printed circuit board PCB 26C-450.

(m) Remove the screws 26C-120, 26C-330, the washers 26C-030, 26C-320 and the nuts 26C-340 from the lavatory structure.

(n) Remove the screws 26C-200 and the microswitch 26C-190.

SUB TASK 25-41-51-040-079-H01
D2549030511000

8. Disassembly of the Electrical System (26C-1)

NOTE: See TABLE 3642 for the references for the replacement procedures of permanent installed parts.

More data for bonded parts are given in column SEE REPAIR TASK. Use the data for the selection of the related repair solution.

IPL FIG. ITEM	COMPONENT PART NAME	IPL FIG. ITEM	REPLACEMENT PART NAME	SEE REPAIR TASK
26C-001 26C-380 26C-390 26C-420	Electrical System 2065VU Switch Panel Switch Housing Assembly Foil Assembly	26C-430 26C-440	Foil Adhesive Film	TBD self adhesive

Table 3642
Reference list for the replacement of permanent installed parts

NOTE: It is recommended that you only remove the components if they are damaged.

(a) Remove the screw 26C-280, the washer 26C-290, the nut 26C-300 and the clamp 26C-310 from the lavatory structure.

(b) Remove the nut 26C-300 and the washer 26C-290 from the lavatory structure.

(c) Remove the ami cabin attendant seat cable 26C-350 as follows:

1 Remove the plug connectors 26C-354, 26C-356, the connector backshell 26C-355 and the ami cabin attendant seat cable 26C-350 from the lavatory structure.

(d) Disconnect the cables, the applicable bonding straps 26C-230, 26C-240, 26C-250, 26C-260, 26C-270 and the cable harness assembly 26C-010 from the electrical components.

(e) See Disassembly of the Cable Harness Assembly for the disassembly procedure of the cable harness assembly 26C-010.

(f) Remove the screws 26C-040, the washers 26C-030, the smoke detector 26C-020 and the smoke detector sealing 26C-050 from the lavatory structure.

NOTE: For further instructions, see CMMV 26-16-16_F4885 (smoke detector).

(g) Remove the screws 26C-120 and the bracket 26C-111 from the lavatory structure.

(h) Remove the screws 26C-120, the washers 26C-030 and the bracket 26C-115 from the lavatory structure.

(i) Remove the call light 26C-100 from the lavatory structure.

NOTE: For further instructions, see CMMV 33-20-01_DD704 (call light).

(j) Remove and disassemble the light assembly 26C-130 as follows:

NOTE: For further instructions, see CMMV 33-24-05_DD704 (light assembly).

1 Remove the lens 26C-140, the housing 26C-150, the incandescent lamp 26C-160 and the lamp 26C-170.

(k) Remove the loudspeaker 26C-180 from the lavatory structure.

NOTE: For further instructions, see CMMV 23-31-12_D7320 (loudspeaker).

(l) Remove and disassemble the 2065VU switch panel 26C-380 as follows:

1 Remove the plugs 26C-500 from the printed circuit board PCB 26C-450.

2 Remove and disassemble the switch housing assembly 26C-390 as follows:
a Remove the screws 26C-460, the spring washers 26C-470 and the switch housing 26C-400 from the printed circuit board PCB 26C-450.

3 Remove the protective lens 26C-490 from the switch button switch 26C-480.

4 Remove the switch button switch 26C-480 from the printed circuit board PCB 26C-450.

(m) Remove the screws 26C-120, 26C-330, the washers 26C-030, 26C-320 and the nuts 26C-340 from the lavatory structure.

(n) Remove the screws 26C-200 and the microswitch 26C-190.

SUB TASK 25-41-51-040-079-J01
D2549010514000 D2549010602000 D2549020506200 D2549020506400 D2549020507000 D2549020701000 D2549030505400 D2549030506600

9. Disassembly of the Electrical System (26C-1)

NOTE: **It is recommended that you only remove the components if they are damaged.**

(a) Remove the screw 26C-280, the washer 26C-290, the nut 26C-300 and the clamp 26C-310 from the lavatory structure.

(b) Remove the nut 26C-300 and the washer 26C-290 from the lavatory structure.

(c) Remove the screw 26C-275 and the bonding strap 26C-273 from the electrical components.

(d) Remove the ami cabin attendant seat cable 26C-350 as follows:

1 Remove the plug connectors 26C-354, 26C-356, the connector backshell 26C-355 and the ami cabin attendant seat cable 26C-350 from the lavatory structure.

(e) Disconnect the cables, the applicable bonding straps 26C-230, 26C-240, 26C-250, 26C-260, 26C-270 and the cable harness assembly 26C-010 from the electrical components.

(f) See Disassembly of the Cable Harness Assembly for the disassembly procedure of the cable harness assembly 26C-010.

(g) Remove the screws 26C-040, the washers 26C-030, the smoke detector 26C-020 and the smoke detector sealing 26C-050 from the lavatory structure.

NOTE: For further instructions, see CMMV 26-17-15_F4885 (smoke detector).

(h) Remove the screws 26C-120 and the bracket 26C-111 from the lavatory structure.

(i) Remove the screws 26C-120, the washers 26C-030 and the bracket 26C-115 from the lavatory structure.

(j) Remove the call light 26C-100 from the lavatory structure.

NOTE: For further instructions, see CMMV 33-20-01_DD704 (call light).

(k) Remove and disassemble the light assembly 26C-130 as follows:

NOTE: For further instructions, see CMMV 33-24-05_DD704 (light assembly).

1 Remove the lens 26C-140, the housing 26C-150, the incandescent lamp 26C-160 and the lamp 26C-170.

(l) Remove the loudspeaker 26C-180 from the lavatory structure.

NOTE: For further instructions, see CMMV 23-31-12_D7320 (loudspeaker).

(m) Remove the screws 26C-120, 26C-330, the washers 26C-030, 26C-320 and the nuts 26C-340 from the lavatory structure.

(n) Remove the screws 26C-200 and the microswitch 26C-190.

SUB TASK 25-41-51-040-079-K01
D2549020507200 D2549030513800

10. Disassembly of the Electrical System (26C-1)

NOTE: It is recommended that you only remove the components if they are damaged.

(a) Remove the screw 26C-280, the washer 26C-290, the nut 26C-300 and the clamp 26C-310 from the lavatory structure.

(b) Remove the nut 26C-300 and the washer 26C-290 from the lavatory structure.

(c) Remove the screw 26C-275 and the bonding strap 26C-273 from the electrical components.

(d) Remove the ami cabin attendant seat cable 26C-350 as follows:

1 Remove the plug connectors 26C-354, 26C-356, the connector backshell 26C-355 and the ami cabin attendant seat cable 26C-350 from the lavatory structure.

(e) Disconnect the cables, the applicable bonding straps 26C-230, 26C-240, 26C-250, 26C-260, 26C-270 and the cable harness assembly 26C-010 from the electrical components.

(f) See Disassembly of the Cable Harness Assembly for the disassembly procedure of the cable harness assembly 26C-010.

(g) Remove the screws 26C-040, the washers 26C-030, the smoke detector 26C-020 and the smoke detector sealing 26C-050 from the lavatory structure.

NOTE: For further instructions, see CMMV 26-16-16_F4885 (smoke detector).

(h) Remove the screws 26C-120 and the bracket 26C-110 from the lavatory structure.

(i) Remove the screws 26C-120, the washers 26C-030 and the bracket 26C-110 from the lavatory structure.

(j) Remove the call light 26C-100 from the lavatory structure.

NOTE: For further instructions, see CMMV 33-20-01_DD704 (call light).

(k) Remove and disassemble the light assembly 26C-130 as follows:

NOTE: For further instructions, see CMMV 33-24-05_DD704 (light assembly).

1 Remove the lens 26C-140, the housing 26C-150, the incandescent lamp 26C-160 and the lamp 26C-170.

(l) Remove the loudspeaker 26C-180 from the lavatory structure.

NOTE: For further instructions, see CMMV 23-31-12_D7320 (loudspeaker).

(m) Remove the screws 26C-120, 26C-330, the washers 26C-030, 26C-320 and the nuts 26C-340 from the lavatory structure.

(n) Remove the screws 26C-200 and the microswitch 26C-190.

TASK 25-41-51-000-821-E01
D2549010513600 D2549010514600 D2549010601400 D2549030509800 D2549030513000 R225401134-018 R225401145-002 R225401172-006

203. Disassembly of the Electrical System

A. General

A complete disassembly of the component is not necessary and not recommended.

Do not disassemble the component more than it is necessary for:

- Cleaning
- Visual Inspection
- Replacement of defective parts.

B. Job Set-up Information

(1) Not applicable

C. Procedure

WARNING: BE CAREFUL WHEN YOU USE SOLVENTS/CLEANING AGENTS, SEALANTS AND OTHER MATERIALS. OBEY THE MATERIAL MANUFACTURER'S INSTRUCTIONS AND THE LOCAL REGULATIONS. MAKE SURE THAT THERE IS A GOOD FLOW OF AIR THROUGH THE WORK AREA. DO NOT BREATHE THE FUMES. DO NOT SMOKE. DO NOT USE THESE MATERIALS NEAR A FLAME, SPARKS OR SOURCES OF HEAT. USE PROTECTIVE CLOTHING, GOGGLES AND GLOVES. IF YOU GET ONE OF THESE MATERIALS ON YOUR SKIN OR IN YOUR EYES, FLUSH IT AWAY WITH A FLOW OF CLEAN WATER. IF YOU GET ONE OF THESE MATERIALS IN YOUR MOUTH, GET IMMEDIATE MEDICAL AID. IN GENERAL, THESE MATERIALS ARE POISONOUS, FLAMMABLE AND SKIN IRRITANTS.

CAUTION: DO ALL THE WORK ON A CLEAN, SOFT SURFACE TO PREVENT DAMAGE TO THE COMPONENTS.

SUB TASK 25-41-51-040-080-A01
D2549010514600 D2549030509800 D2549030513000 R225401134-018 R225401145-002 R225401172-006

1. Disassembly of the Electrical System (26D-1)

NOTE: **It is recommended that you only remove the components if they are damaged.**

(a) Remove the screw 26D-280, the washer 26D-290, the nut 26D-300 and the clamp 26D-310 from the lavatory structure.

(b) Remove the nut 26D-300 and the washer 26D-290 from the lavatory structure.

(c) Remove the ami cabin attendant seat cable 26D-350 as follows:

1 Remove the plug connectors 26D-380, 26D-400, the connector backshell 26D-390 and the ami cabin attendant seat cable 26D-350 from the lavatory structure.

(d) Disconnect the cables, the applicable bonding straps 26D-230, 26D-240, 26D-250, 26D-260, 26D-270 and the cable harness assembly 26D-010 from the electrical components.

(e) See Disassembly of the Cable Harness Assembly for the disassembly procedure of the cable harness assembly 26D-010.

(f) Remove the screws 26D-040, the washers 26D-030, the smoke detector 26D-020 and the smoke detector sealing 26D-050 from the lavatory structure.

NOTE: **For further instructions, see CMMV 26-16-16_F4885 (smoke detector).**

(g) Remove the screws 26D-120, the washers 26D-030 and the brackets 26D-110 from the lavatory structure.

(h) Remove the call light 26D-100 from the lavatory structure.

NOTE: **For further instructions, see CMMV 33-20-01_DD704 (call light).**

(i) Remove and disassemble the light assembly 26D-130 as follows:

NOTE: **For further instructions, see CMMV 33-24-05_DD704 (light assembly).**

1 Remove the lens 26D-140, the housing 26D-150, the incandescent lamp 26D-160 and the lamp 26D-170.

(j) Remove the loudspeaker 26D-180 from the lavatory structure.

NOTE: **For further instructions, see CMMV 23-31-12_D7320 (loudspeaker).**

(k) Remove the screws 26D-120, 26D-330, the washers 26D-030, 26D-320 and the nuts 26D-340 from the lavatory structure.

(l) Remove the screws 26D-200 and the microswitch 26D-190.

SUB TASK 25-41-51-040-080-B01
D2549010513600

2. Disassembly of the Electrical System (26D-1)

NOTE: **It is recommended that you only remove the components if they are damaged.**

(a) Remove the screw 26D-280, the washer 26D-290, the nut 26D-300 and the clamp 26D-310 from the lavatory structure.

(b) Remove the nut 26D-300 and the washer 26D-290 from the lavatory structure.

(c) Remove the ami cabin attendant seat cable 26D-350 as follows:

1 Remove the plug connectors 26D-380, 26D-400, the connector backshell 26D-390 and the ami cabin attendant seat cable 26D-350 from the lavatory structure.

(d) Disconnect the cables, the applicable bonding straps 26D-230, 26D-240, 26D-250, 26D-260, 26D-270 and the cable harness assembly 26D-010 from the electrical components.

(e) See Disassembly of the Cable Harness Assembly for the disassembly procedure of the cable harness assembly 26D-010.

(f) Remove the screws 26D-040, the washers 26D-030, the smoke detector 26D-020 and the smoke detector sealing 26D-050 from the lavatory structure.

NOTE: **For further instructions, see CMMV 26-17-15_F4885 (smoke detector).**

(g) Remove the screws 26D-120, the washers 26D-030 and the brackets 26D-110 from the lavatory structure.

(h) Remove the call light 26D-100 from the lavatory structure.

NOTE: **For further instructions, see CMMV 33-22-01_DD704 (call light).**

(i) Remove and disassemble the light assembly 26D-130 as follows:

NOTE: For further instructions, see CMMV 33-27-01_DD704 (light assembly).

1 Remove the lens 26D-140, the housing 26D-150, the incandescent lamp 26D-160 and the lamp 26D-170.

(j) Remove the loudspeaker 26D-180 from the lavatory structure.

NOTE: For further instructions, see CMMV 23-31-12_D7320 (loudspeaker).

(k) Remove the screws 26D-120, 26D-330, the washers 26D-030, 26D-320 and the nuts 26D-340 from the lavatory structure.

(l) Remove the screws 26D-200 and the microswitch 26D-190.

SUB TASK 25-41-51-040-080-C01
D2549010601400

3. Disassembly of the Electrical System (26D-1)

NOTE: It is recommended that you only remove the components if they are damaged.

(a) Remove the screw 26D-280, the washer 26D-290, the nut 26D-300 and the clamp 26D-310 from the lavatory structure.

(b) Remove the nut 26D-300 and the washer 26D-290 from the lavatory structure.

(c) Remove the ami cabin attendant seat cable 26D-350 as follows:

1 Remove the plug connectors 26D-380, 26D-400, the connector backshell 26D-390 and the ami cabin attendant seat cable 26D-350 from the lavatory structure.

(d) Disconnect the cables, the applicable bonding straps 26D-230, 26D-240, 26D-250, 26D-260, 26D-270 and the cable harness assembly 26D-010 from the electrical components.

(e) See Disassembly of the Cable Harness Assembly for the disassembly procedure of the cable harness assembly 26D-010.

(f) Remove the screws 26D-040, the washers 26D-030, the smoke detector 26D-020 and the smoke detector sealing 26D-050 from the lavatory structure.

NOTE: For further instructions, see CMMV 26-16-16_F4885 (smoke detector).

(g) Remove the screws 26D-120, the washers 26D-030 and the brackets 26D-110 from the lavatory structure.

(h) Remove the call light 26D-100 from the lavatory structure.

NOTE: For further instructions, see CMMV 33-22-01_DD704 (call light).

(i) Remove and disassemble the light assembly 26D-130 as follows:

NOTE: For further instructions, see CMMV 33-27-01_DD704 (light assembly).

1 Remove the lens 26D-140, the housing 26D-150, the incandescent lamp 26D-160 and the lamp 26D-170.

(j) Remove the loudspeaker 26D-180 from the lavatory structure.

NOTE: For further instructions, see CMMV 23-31-12_D7320 (loudspeaker).

(k) Remove the screws 26D-120, 26D-330, the washers 26D-030, 26D-320 and the nuts 26D-340 from the lavatory structure.

(l) Remove the screws 26D-200 and the microswitch 26D-190.

TASK 25-41-51-000-821-F01

D2549010600800 D2549010603000 D2549010603200 D2549010603400 D2549010603600 D2549010603800 D2549010604400 D2549010604600 D2549010604800 D2549020704800 D2549020705000 D2549020705200 D2549020706200 D2549020706400 D2549020706600 D2549020707000 D2549020707200 D2549020707400 D2549020707600 D2549020707800 D2549020710000 D2549020710200 D2549020710800 D2549020711000 D2549020711200 D2549020711400 D2549020712200 D2549020712400 D2549030510400 D2549030513200 D2549030514600 D2549030514800 D2549030600400 D2549030600600 D2549030601000 D2549030601200 D2549030603400 D2549030603600 D2549030603800 D2549030604400 D2549030604600 D2549030604800 D2549030605000 D2549030605800 R225401134-020 R225401136-010 R225401136-020 R225401145-012 R225401152-002 R225401160-000 R225401168-018 R225401172-010 R225401195-000 R225401196-000 R225401196-046 R225401600-000 R225401603-000

204. Disassembly of the Electrical System

A. General

A complete disassembly of the component is not necessary and not recommended.

Do not disassemble the component more than it is necessary for:

- Cleaning
- Visual Inspection
- Replacement of defective parts.

B. Job Set-up Information

(1) Not applicable

C. Procedure

WARNING: BE CAREFUL WHEN YOU USE SOLVENTS/CLEANING AGENTS, SEALANTS AND OTHER MATERIALS. OBEY THE MATERIAL MANUFACTURER'S INSTRUCTIONS AND THE LOCAL REGULATIONS. MAKE SURE THAT THERE IS A GOOD FLOW OF AIR THROUGH THE WORK AREA. DO NOT BREATHE THE FUMES. DO NOT SMOKE. DO NOT USE THESE MATERIALS NEAR A FLAME, SPARKS OR SOURCES OF HEAT. USE PROTECTIVE CLOTHING, GOGGLES AND GLOVES. IF YOU GET ONE OF THESE MATERIALS ON YOUR SKIN OR IN YOUR EYES, FLUSH IT AWAY WITH A FLOW OF CLEAN WATER. IF YOU GET ONE OF THESE MATERIALS IN YOUR MOUTH, GET IMMEDIATE MEDICAL AID. IN GENERAL, THESE MATERIALS ARE POISONOUS, FLAMMABLE AND SKIN IRRITANTS.

CAUTION: **DO ALL THE WORK ON A CLEAN, SOFT SURFACE TO PREVENT DAMAGE TO THE COMPONENTS.**

SUB TASK 25-41-51-040-081-A01

D2549010603000 D2549010603200 D2549010603400 D2549010603600 D2549010603800 D2549010604400 D2549010604600 D2549010604800 D2549020704800 D2549020705200 D2549020706200 D2549020706400 D2549020706600 D2549020707000 D2549020707200 D2549020707600 D2549020707800 D2549020710000 D2549020710200 D2549020710800 D2549020711000 D2549020711200 D2549020711400 D2549020712200 D2549020712400 D2549030510400 D2549030514600 D2549030600400 D2549030600600 D2549030601000 D2549030601200 D2549030603400 D2549030603600 D2549030604800 D2549030605000 D2549030605800 R225401134-020 R225401136-010 R225401136-020 R225401145-012 R225401152-002 R225401160-000 R225401168-018 R225401172-010 R225401196-000 R225401196-046 R225401600-000 R225401603-000

1. Disassembly of the Electrical System (26E-1)

NOTE: **It is recommended that you only remove the components if they are damaged.**

(a) Remove the screw 26E-280, the washer 26E-290 and the clamp 26E-310 from the lavatory structure.

(b) Remove the nut 26E-300 and the washer 26E-290 from the lavatory structure.

(c) Remove the ami cabin attendant seat cable 26E-350 as follows:

1 Remove the plug connectors 26E-380, 26E-400, the connector backshell 26E-390 and the ami cabin attendant seat cable 26E-350 from the lavatory structure.

(d) Disconnect the cables, the applicable bonding straps 26E-230, 26E-240, 26E-250, 26E-260, 26E-270 and the cable harness assembly 26E-010 from the electrical components.

(e) See Disassembly of the Cable Harness Assembly for the disassembly procedure of the cable harness assembly 26E-010.

(f) Remove the screws 26E-040, the washers 26E-030, the nuts 26E-425, the smoke detector 26E-020 and the smoke detector sealing 26E-050 from the lavatory structure.

NOTE: **For further instructions, see CMMV 26-16-16_F4885 (smoke detector).**

(g) Remove the screws 26E-120, the washers 26E-030 and the brackets 26E-110 from the lavatory structure.

(h) Remove the call light 26E-100 from the lavatory structure.

NOTE: For further instructions, see CMMV 33-20-01_DD704 (call light).

(i) Remove and disassemble the light assembly 26E-130 as follows:

NOTE: For further instructions, see CMMV 33-24-05_DD704 (light assembly).

1 Remove the lens 26E-140, the housing 26E-150, the incandescent lamp 26E-160 and the lamp 26E-170.

(j) Remove the loudspeaker 26E-180 from the lavatory structure.

NOTE: For further instructions, see CMMV 23-31-12_D7320 (loudspeaker).

(k) Remove the screws 26E-120, 26E-330, the washers 26E-030, 26E-320 and the nuts 26E-340 from the lavatory structure.

(l) Remove the screws 26E-200 and the microswitch 26E-190.

SUB TASK 25-41-51-040-081-B01
D2549010600800 D2549020705000 D2549020707400 D2549030514800 D2549030604600 R225401195-000

2. Disassembly of the Electrical System (26E-1)

NOTE: **See TABLE 3643 for the references for the replacement procedures of permanent installed parts.**

More data for bonded parts are given in column SEE REPAIR TASK. Use the data for the selection of the related repair solution.

IPL FIG. ITEM	COMPONENT PART NAME	IPL FIG. ITEM	REPLACEMENT PART NAME	SEE REPAIR TASK
26E-001 26E-430 26E-440 26E-460	Electrical System 2065VU Switch Panel Switch Housing Assembly Foil Assembly	26E-470 26E-480	Foil Adhesive Film	TBD self adhesive

Table 3643
Reference list for the replacement of permanent installed parts

NOTE: **It is recommended that you only remove the components if they are damaged.**

(a) Remove the screw 26E-280, the washer 26E-290 and the clamp 26E-310 from the lavatory structure.

(b) Remove the nut 26E-300 and the washer 26E-290 from the lavatory structure.

(c) Remove the ami cabin attendant seat cable 26E-350 as follows:

1 Remove the plug connectors 26E-380, 26E-400, the connector backshell 26E-390 and the ami cabin attendant seat cable 26E-350 from the lavatory structure.

(d) Disconnect the cables, the applicable bonding straps 26E-230, 26E-240, 26E-250, 26E-260, 26E-270 and the cable harness assembly 26E-010 from the electrical components.

(e) See Disassembly of the Cable Harness Assembly for the disassembly procedure of the cable harness assembly 26E-010.

(f) Remove the screws 26E-040, the washers 26E-030, the nuts 26E-425, the smoke detector 26E-020 and the smoke detector sealing 26E-050 from the lavatory structure.

NOTE: For further instructions, see CMMV 26-16-16_F4885 (smoke detector).

(g) Remove the screws 26E-120, the washers 26E-030 and the brackets 26E-110 from the lavatory structure.

(h) Remove the call light 26E-100 from the lavatory structure.

NOTE: For further instructions, see CMMV 33-20-01_DD704 (call light).

(i) Remove and disassemble the light assembly 26E-130 as follows:

NOTE: For further instructions, see CMMV 33-24-05_DD704 (light assembly).

1 Remove the lens 26E-140, the housing 26E-150, the incandescent lamp 26E-160 and the lamp 26E-170.

(j) Remove the loudspeaker 26E-180 from the lavatory structure.

NOTE: For further instructions, see CMMV 23-31-12_D7320 (loudspeaker).

(k) Remove and disassemble the 2065VU switch panel 26E-430 as follows:

1 Remove the plugs 26E-540 from the printed circuit board PCB 26E-490.

2 Remove and disassemble the switch housing assembly 26E-440 as follows:

a Remove the screws 26E-500, the spring washers 26E-510 and the switch housing 26E-450 from the printed circuit board PCB 26E-490.

3 Remove the protective lens 26E-530 from the switch button switch 26E-520.

4 Remove the switch button switch 26E-520 from the printed circuit board PCB 26E-490.

(l) Remove the screws 26E-120, 26E-330, the washers 26E-030, 26E-320 and the nuts 26E-340 from the lavatory structure.

(m) Remove the screws 26E-200 and the microswitch 26E-190.

SUB TASK 25-41-51-040-081-C01
D2549030603800 D2549030604400

3. Disassembly of the Electrical System (26E-1)

NOTE: **It is recommended that you only remove the components if they are damaged.**

(a) Remove the screw 26E-280 and the clamp 26E-310 from the lavatory structure.

(b) Remove the nut 26E-300 from the lavatory structure.

(c) Remove the screw 26E-285, the washers 26E-291 and the bonding strap 26E-275 from the electrical components.

(d) Remove the ami cabin attendant seat cable 26E-350 as follows:

1 Remove the plug connectors 26E-380, 26E-400, the connector backshell 26E-390 and the ami cabin attendant seat cable 26E-350 from the lavatory structure.

(e) Disconnect the cables, the applicable bonding straps 26E-230, 26E-240, 26E-250, 26E-260, 26E-270 and the cable harness assembly 26E-010 from the electrical components.

(f) See Disassembly of the Cable Harness Assembly for the disassembly procedure of the cable harness assembly 26E-010.

(g) Remove the screws 26E-040, the washers 26E-030, the nuts 26E-425, the smoke detector 26E-020 and the smoke detector sealing 26E-050 from the lavatory structure.

NOTE: **For further instructions, see CMMV 26-16-16_F4885 (smoke detector).**

(h) Remove the screws 26E-120, the washers 26E-030 and the brackets 26E-110 from the lavatory structure.

(i) Remove the call light 26E-100 from the lavatory structure.

NOTE: **For further instructions, see CMMV 33-20-01_DD704 (call light).**

(j) Remove and disassemble the light assembly 26E-130 as follows:

NOTE: For further instructions, see CMMV 33-24-05_DD704 (light assembly).

1 Remove the lens 26E-140, the housing 26E-150, the incandescent lamp 26E-160 and the lamp 26E-170.

(k) Remove the loudspeaker 26E-180 from the lavatory structure.

NOTE: For further instructions, see CMMV 23-31-12_D7320 (loudspeaker).

(l) Remove the screws 26E-120, 26E-330, the washers 26E-030, 26E-320 and the nuts 26E-340 from the lavatory structure.

(m) Remove the screws 26E-200 and the microswitch 26E-190.

SUB TASK 25-41-51-040-081-D01
D2549030513200

4. Disassembly of the Electrical System (26E-1)

NOTE: It is recommended that you only remove the components if they are damaged.

(a) Remove the screw 26E-280, the washer 26E-290 and the clamp 26E-310 from the lavatory structure.

(b) Remove the nut 26E-300 and the washer 26E-290 from the lavatory structure.

(c) Remove the ami cabin attendant seat cable 26E-350 as follows:

1 Remove the plug connectors 26E-380, 26E-400, the connector backshell 26E-390 and the ami cabin attendant seat cable 26E-350 from the lavatory structure.

(d) Disconnect the cables, the applicable bonding straps 26E-230, 26E-240, 26E-250, 26E-260, 26E-270 and the cable harness assembly 26E-010 from the electrical components.

(e) See Disassembly of the Cable Harness Assembly for the disassembly procedure of the cable harness assembly 26E-010.

(f) Remove the screws 26E-040, the washers 26E-030, the nuts 26E-425, the smoke detector 26E-020 and the smoke detector sealing 26E-050 from the lavatory structure.

NOTE: For further instructions, see CMMV 26-16-16_F4885 (smoke detector).

(g) Remove the screws 26E-120, the washers 26E-030 and the brackets 26E-110 from the lavatory structure.

(h) Remove the call light 26E-100 from the lavatory structure.

NOTE: For further instructions, see CMMV 33-22-01_DD704 (call light).

(i) Remove and disassemble the light assembly 26E-130 as follows:

NOTE: For further instructions, see CMMV 33-24-05_DD704 (light assembly).

1 Remove the lens 26E-140, the housing 26E-150, the incandescent lamp 26E-160 and the lamp 26E-170.

(j) Remove the loudspeaker 26E-180 from the lavatory structure.

NOTE: For further instructions, see CMMV 23-31-12_D7320 (loudspeaker).

(k) Remove the screws 26E-120, 26E-330, the washers 26E-030, 26E-320 and the nuts 26E-340 from the lavatory structure.

(l) Remove the screws 26E-200 and the microswitch 26E-190.

TASK 25-41-51-000-821-G01
D2549010604000 D2549010604200 D2549020701600 D2549020708600 D2549020708800 D2549020709000 D2549020709200 D2549020709400 D2549020709800 D2549020710400 D2549020712800 D2549020713400 D2549020713600 D2549020714400 D2549030601600 D2549030601800 D2549030602000 D2549030602200 D2549030602600 D2549030602800 D2549030603000 D2549030605200 R225401134-022 R225401152-004 R225401168-014 R225401168-028 R225401172-008 R225401600-002

205. Disassembly of the Electrical System

A. General

A complete disassembly of the component is not necessary and not recommended.

Do not disassemble the component more than it is necessary for:

- Cleaning
- Visual Inspection
- Replacement of defective parts.

B. Job Set-up Information

(1) Not applicable

C. Procedure

WARNING: BE CAREFUL WHEN YOU USE SOLVENTS/CLEANING AGENTS, SEALANTS AND OTHER MATERIALS. OBEY THE MATERIAL MANUFACTURER'S INSTRUCTIONS AND THE LOCAL REGULATIONS. MAKE SURE THAT THERE IS A GOOD FLOW OF AIR THROUGH THE WORK AREA. DO NOT BREATHE THE FUMES. DO NOT SMOKE. DO NOT USE THESE MATERIALS NEAR A FLAME, SPARKS OR SOURCES OF HEAT. USE PROTECTIVE CLOTHING, GOGGLES AND GLOVES. IF YOU GET ONE OF THESE MATERIALS ON YOUR SKIN OR IN YOUR EYES, FLUSH IT AWAY WITH A FLOW OF CLEAN WATER. IF YOU GET ONE OF THESE MATERIALS IN YOUR MOUTH, GET IMMEDIATE MEDICAL AID. IN GENERAL, THESE MATERIALS ARE POISONOUS, FLAMMABLE AND SKIN IRRITANTS.

CAUTION: DO ALL THE WORK ON A CLEAN, SOFT SURFACE TO PREVENT DAMAGE TO THE COMPONENTS.

SUB TASK 25-41-51-040-082-A01
1. Disassembly of the Electrical System (26F-1)

NOTE: **It is recommended that you only remove the components if they are damaged.**

(a) Remove the screw 26F-280, the washer 26F-290 and the clamp 26F-310 from the lavatory structure.

(b) Remove the nut 26F-300 and the washer 26F-290 from the lavatory structure.

(c) Remove the screws 26F-120, 26F-330, the washers 26F-030, 26F-320 and the nuts 26F-340 from the lavatory structure.

(d) Remove the ami cabin attendant seat cable 26F-350 as follows:

1 Remove the plug connectors 26F-380, 26F-400, the connector backshell 26F-390 and the ami cabin attendant seat cable 26F-350 from the lavatory structure.

(e) Disconnect the cables, the applicable bonding straps 26F-230, 26F-240, 26F-250, 26F-260, 26F-270 and the cable harness assembly 26F-010 from the electrical components.

(f) See Disassembly of the Cable Harness Assembly for the disassembly procedure of the cable harness assembly 26F-010.

(g) Remove the screws 26F-040, the washers 26F-030, the smoke detector 26F-020 and the smoke detector sealing 26F-050 from the lavatory structure.

NOTE: **For further instructions, see CMMV 26-16-16_F4885 (smoke detector).**

(h) Remove the screws 26F-120, the washers 26F-030 and the brackets 26F-110 from the lavatory structure.

(i) Remove the call light 26F-100 from the lavatory structure.

NOTE: **For further instructions, see CMMV 33-20-01_DD704 (call light).**

(j) Remove and disassemble the light assembly 26F-130 as follows:

NOTE: **For further instructions, see CMMV 33-24-05_DD704 (light assembly).**

1 Remove the lens 26F-140, the housing 26F-150, the incandescent lamp 26F-160 and the lamp 26F-170.

(k) Remove the loudspeaker 26F-180 from the lavatory structure.

NOTE: For further instructions, see CMMV 23-31-12_D7320 (loudspeaker).

(l) Remove the screws 26F-450, the spacers 26F-440 and the mini inverter 26F-430 from the lavatory structure.

NOTE: For further instructions, see CMMV 25-44-01_D2361 (mini inverter).

(m) Remove the screws 26F-200 and the microswitch 26F-190.

TASK 25-41-51-000-821-H01
D2549010605600 D2549030602400

206. Disassembly of the Electrical System

A. General

A complete disassembly of the component is not necessary and not recommended.

Do not disassemble the component more than it is necessary for:

- Cleaning
- Visual Inspection
- Replacement of defective parts.

B. Job Set-up Information

(1) Not applicable

C. Procedure

WARNING: BE CAREFUL WHEN YOU USE SOLVENTS/CLEANING AGENTS, SEALANTS AND OTHER MATERIALS. OBEY THE MATERIAL MANUFACTURER'S INSTRUCTIONS AND THE LOCAL REGULATIONS. MAKE SURE THAT THERE IS A GOOD FLOW OF AIR THROUGH THE WORK AREA. DO NOT BREATHE THE FUMES. DO NOT SMOKE. DO NOT USE THESE MATERIALS NEAR A FLAME, SPARKS OR SOURCES OF HEAT. USE PROTECTIVE CLOTHING, GOGGLES AND GLOVES. IF YOU GET ONE OF THESE MATERIALS ON YOUR SKIN OR IN YOUR EYES, FLUSH IT AWAY WITH A FLOW OF CLEAN WATER. IF YOU GET ONE OF THESE MATERIALS IN YOUR MOUTH, GET IMMEDIATE MEDICAL AID. IN GENERAL, THESE MATERIALS ARE POISONOUS, FLAMMABLE AND SKIN IRRITANTS.

CAUTION: DO ALL THE WORK ON A CLEAN, SOFT SURFACE TO PREVENT DAMAGE TO THE COMPONENTS.

SUB TASK 25-41-51-040-083-A01
1. Disassembly of the Electrical System (26G-1)

NOTE: **See TABLE 3644 for the references for the replacement procedures of permanent installed parts.**

More data for bonded parts are given in column SEE REPAIR TASK. Use the data for the selection of the related repair solution.

IPL FIG. ITEM	COMPONENT PART NAME	IPL FIG. ITEM	REPLACEMENT PART NAME	SEE REPAIR TASK
26G-001 26G-470 26G-480 26G-500	Electrical System 2065VU Switch Panel Switch Housing Assembly Foil Assembly	26G-510 26G-520	Foil Adhesive Film	TBD self adhesive

Table 3644
Reference list for the replacement of permanent installed parts

NOTE: **It is recommended that you only remove the components if they are damaged.**

(a) Remove the screw 26G-280, the washer 26G-290 and the clamp 26G-310 from the lavatory structure.

(b) Remove the nut 26G-300 and the washer 26G-290 from the lavatory structure.

(c) Remove the ami cabin attendant seat cable 26G-350 as follows:

1 Remove the plug connectors 26G-380, 26G-400, the connector backshell 26G-390 and the ami cabin attendant seat cable 26G-350 from the lavatory structure.

(d) Disconnect the cables, the applicable bonding straps 26G-230, 26G-240, 26G-250, 26G-260, 26G-270 and the cable harness assembly 26G-010 from the electrical components.

(e) See Disassembly of the Cable Harness Assembly for the disassembly procedure of the cable harness assembly 26G-010.

(f) Remove the screws 26G-040, the washers 26G-030, the smoke detector 26G-020 and the smoke detector sealing 26G-050 from the lavatory structure.

NOTE: For further instructions, see CMMV 26-16-16_F4885 (smoke detector).

(g) Remove the screws 26G-120, the washers 26G-030 and the brackets 26G-110 from the lavatory structure.

(h) Remove the call light 26G-100 from the lavatory structure.

NOTE: For further instructions, see CMMV 33-20-01_DD704 (call light).

(i) Remove and disassemble the light assembly 26G-130 as follows:

NOTE: For further instructions, see CMMV 33-24-05_DD704 (light assembly).

1 Remove the lens 26G-140, the housing 26G-150, the incandescent lamp 26G-160 and the lamp 26G-170.

(j) Remove the loudspeaker 26G-180 from the lavatory structure.

NOTE: For further instructions, see CMMV 23-31-12_D7320 (loudspeaker).

(k) Remove the screws 26G-450, the spacers 26G-440 and the mini inverter 26G-430 from the lavatory structure.

NOTE: For further instructions, see CMMV 25-44-01_D2361 (mini inverter).

(l) Remove and disassemble the 2065VU switch panel 26G-470 as follows:

1 Remove the plugs 26G-580 from the printed circuit board PCB 26G-530.

2 Remove and disassemble the switch housing assembly 26G-480 as follows:

a Remove the screws 26G-540, the spring washers 26G-550 and the switch housing 26G-490 from the printed circuit board PCB 26G-530.

3 Remove the protective lens 26G-570 from the switch button switch 26G-560.

4 Remove the switch button switch 26G-560 from the printed circuit board PCB 26G-530.

(m) Remove the screws 26G-120, 26G-330, the washers 26G-030, 26G-320 and the nuts 26G-340 from the lavatory structure.

(n) Remove the screws 26G-200 and the microswitch 26G-190.

TASK 25-41-51-000-821-J01
D2549020712000

207. Disassembly of the Electrical System

A. General

A complete disassembly of the component is not necessary and not recommended.

Do not disassemble the component more than it is necessary for:

- Cleaning
- Visual Inspection
- Replacement of defective parts.

B. Job Set-up Information

(1) Not applicable

C. Procedure

WARNING: BE CAREFUL WHEN YOU USE SOLVENTS/CLEANING AGENTS, SEALANTS AND OTHER MATERIALS. OBEY THE MATERIAL MANUFACTURER'S INSTRUCTIONS AND THE LOCAL REGULATIONS. MAKE SURE THAT THERE IS A GOOD FLOW OF AIR THROUGH THE WORK AREA. DO NOT BREATHE THE FUMES. DO NOT SMOKE. DO NOT USE THESE MATERIALS NEAR A FLAME, SPARKS OR SOURCES OF HEAT. USE PROTECTIVE CLOTHING, GOGGLES AND GLOVES. IF YOU GET ONE OF THESE MATERIALS ON YOUR SKIN OR IN YOUR EYES, FLUSH IT AWAY WITH A FLOW OF CLEAN WATER. IF YOU GET ONE OF THESE MATERIALS IN YOUR MOUTH, GET IMMEDIATE MEDICAL AID. IN GENERAL, THESE MATERIALS ARE POISONOUS, FLAMMABLE AND SKIN IRRITANTS.

CAUTION: DO ALL THE WORK ON A CLEAN, SOFT SURFACE TO PREVENT DAMAGE TO THE COMPONENTS.

SUB TASK 25-41-51-040-084-A01

1. Disassembly of the Electrical System (26H-1)

NOTE: It is recommended that you only remove the components if they are damaged.

(a) Remove the screws 26H-060, the washers 26H-020, 26H-110 and the nuts 26H-120 from the lavatory structure.

(b) Remove the ami cabin attendant seat cable 26H-130 from the lavatory structure.

(c) Disconnect the cables and the cable harness assembly 26H-010 from the electrical components.

(d) See Disassembly of the Cable Harness Assembly for the disassembly procedure of the cable harness assembly 26H-010.

(e) Remove the screws 26H-060, the washers 26H-020 and the brackets 26H-050 from the lavatory structure.

(f) Remove the screws 26H-030, the washers 26H-020, the nut 26H-040 and the light assembly 26H-180.

NOTE: For further instructions, see CMMV 33-24-05_DD704 (light assembly).

(g) Remove the screws 26H-080 and the microswitch 26H-070.

TASK 25-41-51-000-821-K01
D2549020708000 D2549020713800 D2549030606400

208. Disassembly of the Electrical System

A. General

A complete disassembly of the component is not necessary and not recommended.

Do not disassemble the component more than it is necessary for:

- Cleaning
- Visual Inspection
- Replacement of defective parts.

B. Job Set-up Information

(1) Not applicable

C. Procedure

WARNING: BE CAREFUL WHEN YOU USE SOLVENTS/CLEANING AGENTS, SEALANTS AND OTHER MATERIALS. OBEY THE MATERIAL MANUFACTURER'S INSTRUCTIONS AND THE LOCAL REGULATIONS. MAKE SURE THAT THERE IS A GOOD FLOW OF AIR THROUGH THE WORK AREA. DO NOT BREATHE THE FUMES. DO NOT SMOKE. DO NOT USE THESE MATERIALS NEAR A FLAME, SPARKS OR SOURCES OF HEAT. USE PROTECTIVE CLOTHING, GOGGLES AND GLOVES. IF YOU GET ONE OF THESE MATERIALS ON YOUR SKIN OR IN YOUR EYES, FLUSH IT AWAY WITH A FLOW OF CLEAN WATER. IF YOU GET ONE OF THESE MATERIALS IN YOUR MOUTH, GET IMMEDIATE MEDICAL AID. IN GENERAL, THESE MATERIALS ARE POISONOUS, FLAMMABLE AND SKIN IRRITANTS.

CAUTION: DO ALL THE WORK ON A CLEAN, SOFT SURFACE TO PREVENT DAMAGE TO THE COMPONENTS.

SUB TASK 25-41-51-040-085-A01
1. Disassembly of the Electrical System (26J-1)

NOTE: **See TABLE 3645 for the references for the replacement procedures of permanent installed parts.**

More data for bonded parts are given in column SEE REPAIR TASK. Use the data for the selection of the related repair solution.

IPL FIG. ITEM	COMPONENT PART NAME	IPL FIG. ITEM	REPLACEMENT PART NAME	SEE REPAIR TASK
26J-001 26J-470 26J-480 26J-500	Electrical System 2065VU Switch Panel Switch Housing Assembly Foil Assembly	26J-510 26J-520	Foil Adhesive Film	TBD self adhesive

Table 3645
Reference list for the replacement of permanent installed parts

NOTE: **It is recommended that you only remove the components if they are damaged.**

(a) Remove the screw 26J-280, the washer 26J-290 and the clamp 26J-310 from the lavatory structure.

(b) Remove the nut 26J-300 and the washer 26J-290 from the lavatory structure.

(c) Remove the ami cabin attendant seat cable 26J-350 as follows:

1 Remove the plug connectors 26J-380, 26J-400, the connector backshell 26J-390 and the ami cabin attendant seat cable 26J-350 from the lavatory structure.

(d) Disconnect the cables, the applicable bonding straps 26J-230, 26J-240, 26J-250, 26J-260, 26J-270 and the cable harness assembly 26J-010 from the electrical components.

(e) See Disassembly of the Cable Harness Assembly for the disassembly procedure of the cable harness assembly 26J-010.

(f) Remove the screws 26J-040, the washers 26J-030, the smoke detector 26J-020 and the smoke detector sealing 26J-050 from the lavatory structure.

NOTE: For further instructions, see CMMV 26-16-16_F4885 (smoke detector).

(g) Remove the screws 26J-120, the washers 26J-030 and the brackets 26J-110 from the lavatory structure.

(h) Remove the call light 26J-100 from the lavatory structure.

NOTE: For further instructions, see CMMV 33-20-01_DD704 (call light).

(i) Remove and disassemble the light assembly 26J-130 as follows:

NOTE: For further instructions, see CMMV 33-24-05_DD704 (light assembly).

1 Remove the lens 26J-140, the housing 26J-150, the incandescent lamp 26J-160 and the lamp 26J-170.

(j) Remove the loudspeaker 26J-180 from the lavatory structure.

NOTE: For further instructions, see CMMV 23-31-12_D7320 (loudspeaker).

(k) Remove the screws 26J-450, the spacers 26J-440 and the mini inverter 26J-430 from the lavatory structure.

NOTE: For further instructions, see CMMV 25-44-01_D2361 (mini inverter).

(l) Remove and disassemble the 2065VU switch panel 26J-470 as follows:

1 Remove the plugs 26J-580 from the printed circuit board PCB 26J-530.

2 Remove and disassemble the switch housing assembly 26J-480 as follows:

a Remove the screws 26J-540, the spring washers 26J-550 and the switch housing 26J-490 from the printed circuit board PCB 26J-530.

3 Remove the protective lens 26J-570 from the switch button switch 26J-560.

4 Remove the switch button switch 26J-560 from the printed circuit board PCB 26J-530.

(m) Remove the screws 26J-120, 26J-330, the washers 26J-030, 26J-320 and the nuts 26J-340 from the lavatory structure.

(n) Remove the screws 26J-200 and the microswitch 26J-190.

TASK 25-41-51-000-821-L01

D2549010605000 D2549010605200 D2549010605800 D2549010606000 D2549010606200
D2549010606400 D2549010606600 D2549010606800 D2549010608200 D2549010608400
D2549010609600 D2549020502200 D2549020507400 D2549020507600 D2549020508000
D2549020508200 D2549020508400 D2549020508600 D2549020508800 D2549020509000
D2549020509200 D2549020509600 D2549020509800 D2549020510000 D2549020512600
D2549020512800 D2549020513600 D2549020514200 D2549020514400 D2549020705800
D2549020709600 D2549020710600 D2549020713000 D2549020713200 D2549020714600
D2549020801000 D2549030402000 D2549030403400 D2549030405200 D2549030503800
D2549030600200 D2549030604200 D2549030605400 D2549030605600 D2549030606000
D2549030606200 D2549030606600 D2549030606800 D2549030607000 D2549030607200
D2549030607400 D2549030607600 D2549030607800 D2549030608200 D2549030608400
D2549030608600 D2549030608800 D2549030609200 D2549030610600 D2549030612800
D2549030614200 R225401115-000 R225401134-008 R225401134-010 R225401134-012
R225401134-024 R225401134-026 R225401134-028 R225401134-030 R225401134-032
R225401134-034 R225401136-000 R225401136-022 R225401145-004 R225401152-006
R225401168-000 R225401168-020 R225401172-012 R225401172-014 R225401183-008
R225401192-000 R225401196-002 R225401196-034 R225401196-048 R225401199-002
R225401600-004 R225401605-000 R225401611-008 R225401613-000 R225401618-000
R225401618-002 R225401619-000

209. Disassembly of the Electrical System

A. General

A complete disassembly of the component is not necessary and not recommended.

Do not disassemble the component more than it is necessary for:

- Cleaning
- Visual Inspection
- Replacement of defective parts.

B. Job Set-up Information

(1) Not applicable

C. Procedure

WARNING: **BE CAREFUL WHEN YOU USE SOLVENTS/CLEANING AGENTS, SEALANTS AND OTHER MATERIALS. OBEY THE MATERIAL MANUFACTURER'S INSTRUCTIONS AND THE LOCAL REGULATIONS. MAKE SURE THAT THERE IS A GOOD FLOW OF AIR THROUGH THE WORK AREA. DO NOT BREATHE THE FUMES. DO NOT SMOKE. DO NOT USE THESE MATERIALS NEAR A FLAME, SPARKS OR SOURCES OF HEAT. USE PROTECTIVE CLOTHING, GOGGLES AND GLOVES. IF YOU GET ONE OF THESE MATERIALS ON YOUR SKIN OR IN YOUR EYES, FLUSH IT AWAY WITH A FLOW OF CLEAN WATER. IF YOU GET ONE OF THESE MATERIALS IN YOUR MOUTH, GET IMMEDIATE MEDICAL AID. IN GENERAL, THESE MATERIALS ARE POISONOUS, FLAMMABLE AND SKIN IRRITANTS.**

CAUTION: **DO ALL THE WORK ON A CLEAN, SOFT SURFACE TO PREVENT DAMAGE TO THE COMPONENTS.**

SUB TASK 25-41-51-040-086-A01

D2549010605000 D2549010605200 D2549010605800 D2549010606000
D2549010606200 D2549010606400 D2549010606600 D2549010606800
D2549010608200 D2549010608400 D2549010609600 D2549020502200
D2549020507400 D2549020507600 D2549020508000 D2549020508200
D2549020508400 D2549020508600 D2549020508800 D2549020509000
D2549020509200 D2549020509600 D2549020509800 D2549020510000
D2549020512600 D2549020514200 D2549020514400 D2549020705800
D2549020709600 D2549020710600 D2549020713000 D2549020713200
D2549020714600 D2549030503800 D2549030600200 D2549030604200
D2549030605400 D2549030605600 D2549030606000 D2549030606200
D2549030606600 D2549030606800 D2549030607000 D2549030607200
D2549030607600 D2549030607800 D2549030608200 D2549030608400
D2549030608600 D2549030609200 D2549030610600 D2549030612800
D2549030614200 R225401115-000 R225401134-008 R225401134-024 R225401134-026
R225401134-028 R225401136-000 R225401136-022 R225401145-004 R225401152-006
R225401168-000 R225401168-020 R225401172-012 R225401172-014 R225401183-008
R225401192-000 R225401196-002 R225401196-034 R225401196-048 R225401199-002
R225401600-004 R225401605-000 R225401611-008 R225401613-000 R225401618-000
R225401618-002 R225401619-000

1. Disassembly of the Electrical System (26K-1)

NOTE: **It is recommended that you only remove the components if they are damaged.**

(a) Remove the screw 26K-280, the washer 26K-290 and the clamp 26K-310 from the lavatory structure.

(b) Remove the nut 26K-300 and the washer 26K-290 from the lavatory structure.

(c) Remove the ami cabin attendant seat cable 26K-350 as follows:

1 Remove the plug connectors 26K-380, 26K-400, the connector backshell 26K-390 and the ami cabin attendant seat cable 26K-350 from the lavatory structure.

(d) Disconnect the cables, the applicable bonding straps 26K-230, 26K-240, 26K-250, 26K-260, 26K-270 and the cable harness assembly 26K-010 from the electrical components.

(e) See Disassembly of the Cable Harness Assembly for the disassembly procedure of the cable harness assembly 26K-010.

(f) Remove the screws 26K-040, the washers 26K-030, the smoke detector 26K-020 and the smoke detector sealing 26K-050 from the lavatory structure.

NOTE: For further instructions, see CMMV 26-16-16_F4885 (smoke detector).

(g) Remove the screws 26K-120, the washers 26K-030 and the brackets 26K-110 from the lavatory structure.

(h) Remove the call light 26K-100 from the lavatory structure.

NOTE: For further instructions, see CMMV 33-20-01_DD704 (call light).

(i) Remove and disassemble the light assembly 26K-130 as follows:

NOTE: For further instructions, see CMMV 33-24-05_DD704 (light assembly).

1 Remove the lens 26K-140, the housing 26K-150, the incandescent lamp 26K-160 and the lamp 26K-170.

(j) Remove the loudspeaker 26K-180 from the lavatory structure.

NOTE: For further instructions, see CMMV 23-31-12_D7320 (loudspeaker).

(k) Remove the screws 26K-450, the spacers 26K-440 and the mini inverter 26K-430 from the lavatory structure.

NOTE: For further instructions, see CMMV 25-44-01_D2361 (mini inverter).

(l) Remove the screws 26K-120, 26K-330, the washers 26K-030, 26K-320 and the nuts 26K-340 from the lavatory structure.

(m) Remove the screws 26K-200 and the microswitch 26K-190.

SUB TASK 25-41-51-040-086-B01
D2549020512800 D2549020513600 D2549020801000 D2549030402000 D2549030403400 D2549030405200 R225401134-010 R225401134-012 R225401134-030 R225401134-032 R225401134-034

2. Disassembly of the Electrical System (26K-1)

NOTE: **It is recommended that you only remove the components if they are damaged.**

(a) Remove the screw 26K-280, the washer 26K-290 and the clamp 26K-310 from the lavatory structure.

(b) Remove the nut 26K-300 and the washer 26K-290 from the lavatory structure.

(c) Remove the ami cabin attendant seat cable 26K-350 as follows:

1 Remove the plug connectors 26K-380, 26K-400, the connector backshell 26K-390 and the ami cabin attendant seat cable 26K-350 from the lavatory structure.

(d) Disconnect the cables, the applicable bonding straps 26K-230, 26K-240, 26K-250, 26K-260, 26K-270 and the cable harness assembly 26K-010 from the electrical components.

(e) See Disassembly of the Cable Harness Assembly for the disassembly procedure of the cable harness assembly 26K-010.

(f) Remove the screws 26K-040, the washers 26K-030, the smoke detector 26K-020 and the smoke detector sealing 26K-050 from the lavatory structure.

NOTE: **For further instructions, see CMMV 26-16-16_F4885 (smoke detector).**

(g) Remove the screws 26K-120, the washers 26K-030 and the brackets 26K-110 from the lavatory structure.

(h) Remove the call light 26K-100 from the lavatory structure.

NOTE: **For further instructions, see CMMV 33-20-01_DD704 (call light).**

(i) Remove the light assembly 26K-130 from the lavatory structure.

NOTE: **For further instructions, see CMMV 33-27-01_DD704 (light assembly).**

(j) Remove the loudspeaker 26K-180 from the lavatory structure.

NOTE: For further instructions, see CMMV 23-31-12_D7320 (loudspeaker).

(k) Remove the screws 26K-450, the spacers 26K-440 and the mini inverter 26K-430 from the lavatory structure.

NOTE: For further instructions, see CMMV 25-44-01_D2361 (mini inverter).

(l) Remove the screws 26K-120, 26K-330, the washers 26K-030, 26K-320 and the nuts 26K-340 from the lavatory structure.

(m) Remove the screws 26K-200 and the microswitch 26K-190.

SUB TASK 25-41-51-040-086-C01
D2549030607400 D2549030608800

3. Disassembly of the Electrical System (26K-1)

NOTE: It is recommended that you only remove the components if they are damaged.

(a) Remove the screw 26K-280, the washer 26K-290 and the clamp 26K-310 from the lavatory structure.

(b) Remove the nut 26K-300 and the washer 26K-290 from the lavatory structure.

(c) Remove the screw 26K-285 and the washer 26K-295 from the lavatory structure.

(d) Remove the ami cabin attendant seat cable 26K-350 as follows:

1 Remove the plug connectors 26K-380, 26K-400, the connector backshell 26K-390 and the ami cabin attendant seat cable 26K-350 from the lavatory structure.

(e) Disconnect the cables, the applicable bonding straps 26K-230, 26K-240, 26K-250, 26K-255, 26K-260, 26K-270 and the cable harness assembly 26K-010 from the electrical components.

(f) See Disassembly of the Cable Harness Assembly for the disassembly procedure of the cable harness assembly 26K-010.

(g) Remove the screws 26K-040, the washers 26K-030, the smoke detector 26K-020 and the smoke detector sealing 26K-050 from the lavatory structure.

NOTE: For further instructions, see CMMV 26-16-16_F4885 (smoke detector).

(h) Remove the screws 26K-120, the washers 26K-030 and the brackets 26K-110 from the lavatory structure.

(i) Remove the call light 26K-100 from the lavatory structure.

NOTE: For further instructions, see CMMV 33-20-01_DD704 (call light).

(j) Remove and disassemble the light assembly 26K-130 as follows:

NOTE: For further instructions, see CMMV 33-24-05_DD704 (light assembly).

1 Remove the lens 26K-140, the housing 26K-150, the incandescent lamp 26K-160 and the lamp 26K-170.

(k) Remove the loudspeaker 26K-180 from the lavatory structure.

NOTE: For further instructions, see CMMV 23-31-12_D7320 (loudspeaker).

(l) Remove the screws 26K-450, the spacers 26K-440 and the mini inverter 26K-430 from the lavatory structure.

NOTE: For further instructions, see CMMV 25-44-01_D2361 (mini inverter).

(m) Remove the screws 26K-120, 26K-330, the washers 26K-030, 26K-320 and the nuts 26K-340 from the lavatory structure.

(n) Remove the screws 26K-200 and the microswitch 26K-190.

TASK 25-41-51-000-821-M01
D2549020712600

210. Disassembly of the Electrical System

A. General

A complete disassembly of the component is not necessary and not recommended.

Do not disassemble the component more than it is necessary for:

- Cleaning
- Visual Inspection
- Replacement of defective parts.

B. Job Set-up Information

(1) Not applicable

C. Procedure

WARNING: **BE CAREFUL WHEN YOU USE SOLVENTS/CLEANING AGENTS, SEALANTS AND OTHER MATERIALS. OBEY THE MATERIAL MANUFACTURER'S INSTRUCTIONS AND THE LOCAL REGULATIONS. MAKE SURE THAT THERE IS A GOOD FLOW OF AIR THROUGH THE WORK AREA. DO NOT BREATHE THE FUMES. DO NOT SMOKE. DO NOT USE THESE MATERIALS NEAR A FLAME, SPARKS OR SOURCES OF HEAT. USE PROTECTIVE CLOTHING, GOGGLES AND GLOVES. IF YOU GET ONE OF THESE MATERIALS ON YOUR SKIN OR IN YOUR EYES, FLUSH IT AWAY WITH A FLOW OF CLEAN WATER. IF YOU GET ONE OF THESE MATERIALS IN YOUR MOUTH, GET IMMEDIATE MEDICAL AID. IN GENERAL, THESE MATERIALS ARE POISONOUS, FLAMMABLE AND SKIN IRRITANTS.**

CAUTION: **DO ALL THE WORK ON A CLEAN, SOFT SURFACE TO PREVENT DAMAGE TO THE COMPONENTS.**

SUB TASK 25-41-51-040-087-A01

1. Disassembly of the Electrical System (26L-1)

NOTE: **It is recommended that you only remove the components if they are damaged.**

(a) Remove the screws 26L-060, the washers 26L-110, the nuts 26L-120 and the bracket 26L-050 from the lavatory structure.

(b) Remove the ami cabin attendant seat cable 26L-130 from the lavatory structure.

(c) Disconnect the cables and the cable harness assembly 26L-010 from the electrical components.

(d) See Disassembly of the Cable Harness Assembly for the disassembly procedure of the cable harness assembly 26L-010.

(e) Remove the screws 26L-060, the washers 26L-020 and the brackets 26L-050 from the lavatory structure.

(f) Remove the screws 26L-030, the washers 26L-020, the nut 26L-040 and the light assembly 26L-180.

NOTE: For further instructions, see CMMV 33-24-05_DD704 (light assembly).

(g) Remove the screws 26L-210, the spacers 26L-200 and the mini inverter 26L-190 from the lavatory structure.

NOTE: For further instructions, see CMMV 25-44-01_D2361 (mini inverter).

(h) Remove the screws 26L-080 and the microswitch 26L-070.

TASK 25-41-51-000-821-N01

D2549010400200 D2549010400400 D2549010400600 D2549010402000 D2549010607000
D2549010607200 D2549010607400 D2549010607600 D2549010607800 D2549010608600
D2549010608800 D2549010609000 D2549010609200 D2549010609400 D2549010610000
D2549010610200 D2549010610400 D2549010610800 D2549010611000 D2549010611200
D2549010611400 D2549010611600 D2549010612000 D2549010612200 D2549010612400
D2549010612600 D2549010613000 D2549010613200 D2549010613400 D2549010613800
D2549010614200 D2549010614600 D2549020400200 D2549020505600 D2549020510600
D2549020510800 D2549020511000 D2549020511200 D2549020511600 D2549020511800
D2549020512000 D2549020512200 D2549020512400 D2549020513000 D2549020513200
D2549020513400 D2549020514000 D2549020514600 D2549020711600 D2549020714000
D2549020800000 D2549020800200 D2549020800400 D2549020800600 D2549020800800
D2549020801200 D2549020801400 D2549020801600 D2549020801800 D2549020802000
D2549020802200 D2549020802400 D2549020802600 D2549020802800 D2549020803000
D2549020803200 D2549020803400 D2549020803600 D2549020803800 D2549020804000
D2549020804200 D2549020804800 D2549020805200 D2549020805600 D2549020805800
D2549020806200 D2549020806400 D2549020806600 D2549020806800 D2549020807000
D2549020807400 D2549020807600 D2549020807800 D2549020808400 D2549020808600
D2549020808800 D2549020809000 D2549020809400 D2549020810000 D2549020810400
D2549020810600 D2549020811400 D2549020811600 D2549020812000 D2549020812200
D2549020812400 D2549020813000 D2549020813600 D2549020814000 D2549020814400
D2549020814600 D2549020814800 D2549030400000 D2549030400200 D2549030400400
D2549030400600 D2549030401200 D2549030401400 D2549030401800 D2549030402200
D2549030402600 D2549030402800 D2549030403000 D2549030403600 D2549030403800
D2549030404200 D2549030404800 D2549030405000 D2549030405400 D2549030405800
D2549030406000 D2549030406400 D2549030406600 D2549030406800 D2549030407200
D2549030409800 D2549030603200 D2549030608000 D2549030609000 D2549030609800
D2549030610000 D2549030610400 D2549030611000 D2549030611200 D2549030611400
D2549030611600 D2549030611800 D2549030612000 D2549030612200 D2549030612400
D2549030612600 D2549030613200 D2549030613400 D2549030613800 D2549030614000
D2549030614400 D2549030614800 R225401136-004 R225401136-018 R225401137-016
R225401145-006 R225401145-008 R225401145-010 R225401145-014 R225401152-008
R225401168-002 R225401168-008 R225401168-010 R225401168-012 R225401168-022
R225401168-024 R225401168-026 R225401172-000 R225401172-016 R225401172-018
R225401183-000 R225401183-002 R225401192-002 R225401196-004 R225401196-006
R225401196-036 R225401196-038 R225401196-044 R225401196-050 R225401196-052
R225401199-004 R225401199-006 R225401199-008 R225401605-002 R225401609-000
R225401611-010 R225401614-000 R225401619-002 R225401622-000 R225401622-002
R225401625-000 R225401629-000 R225401629-002 R225401639-000 R225401643-000
R225401643-004 R225401646-000 R225401647-000 R225401648-000 R225401648-002
R225401656-000 R225401656-002 R225401658-000 R225401693-000

211. Disassembly of the Electrical System

A. General

A complete disassembly of the component is not necessary and not recommended.

Do not disassemble the component more than it is necessary for:

- Cleaning
- Visual Inspection
- Replacement of defective parts.

B. Job Set-up Information

(1) Not applicable

C. Procedure

WARNING: **BE CAREFUL WHEN YOU USE SOLVENTS/CLEANING AGENTS, SEALANTS AND OTHER MATERIALS. OBEY THE MATERIAL MANUFACTURER'S INSTRUCTIONS AND THE LOCAL REGULATIONS. MAKE SURE THAT THERE IS A GOOD FLOW OF AIR THROUGH THE WORK AREA. DO NOT BREATHE THE FUMES. DO NOT SMOKE. DO NOT USE THESE MATERIALS NEAR A FLAME, SPARKS OR SOURCES OF HEAT. USE PROTECTIVE CLOTHING, GOGGLES AND GLOVES. IF YOU GET ONE OF THESE MATERIALS ON YOUR SKIN OR IN YOUR EYES, FLUSH IT AWAY WITH A FLOW OF CLEAN WATER. IF YOU GET ONE OF THESE MATERIALS IN YOUR MOUTH, GET IMMEDIATE MEDICAL AID. IN GENERAL, THESE MATERIALS ARE POISONOUS, FLAMMABLE AND SKIN IRRITANTS.**

CAUTION: **DO ALL THE WORK ON A CLEAN, SOFT SURFACE TO PREVENT DAMAGE TO THE COMPONENTS.**

SUB TASK 25-41-51-040-088-A01

D2549010400200 D2549010400400 D2549010400600 D2549010402000
D2549010607000 D2549010607200 D2549010607400 D2549010607600
D2549010607800 D2549010608600 D2549010608800 D2549010609000
D2549010609200 D2549010609400 D2549010610000 D2549010610200
D2549010610400 D2549010610800 D2549010611000 D2549010611200
D2549010611400 D2549010611600 D2549010612000 D2549010612200
D2549010612400 D2549010612600 D2549010613000 D2549010613200
D2549010613400 D2549010613800 D2549010614200 D2549010614600
D2549020400200 D2549020505600 D2549020510600 D2549020510800
D2549020511000 D2549020511200 D2549020511600 D2549020511800
D2549020512000 D2549020512200 D2549020512400 D2549020513000
D2549020513200 D2549020513400 D2549020514000 D2549020514600
D2549020711600 D2549020714000 D2549020800000 D2549020800200
D2549020800400 D2549020800600 D2549020800800 D2549020801200

D2549020801400 D2549020801600 D2549020801800 D2549020802000 D2549020802200 D2549020802400 D2549020802600 D2549020802800 D2549020803000 D2549020803200 D2549020803400 D2549020803600 D2549020803800 D2549020804000 D2549020804200 D2549020804800 D2549020805200 D2549020805600 D2549020805800 D2549020806200 D2549020806400 D2549020806600 D2549020806800 D2549020807000 D2549020807400 D2549020807600 D2549020807800 D2549020808400 D2549020808600 D2549020808800 D2549020809000 D2549020809400 D2549020810000 D2549020810400 D2549020810600 D2549020811400 D2549020811600 D2549020812000 D2549020812200 D2549020812400 D2549020813000 D2549020813600 D2549020814000 D2549020814400 D2549020814600 D2549020814800 D2549030400000 D2549030400200 D2549030400400 D2549030400600 D2549030401200 D2549030401400 D2549030401800 D2549030402200 D2549030402600 D2549030402800 D2549030403000 D2549030403800 D2549030404200 D2549030404800 D2549030405000 D2549030405400 D2549030405800 D2549030406000 D2549030406400 D2549030406600 D2549030406800 D2549030407200 D2549030409800 D2549030603200 D2549030608000 D2549030609000 D2549030609800 D2549030610000 D2549030610400 D2549030611000 D2549030611200 D2549030611600 D2549030611800 D2549030612000 D2549030612200 D2549030612400 D2549030612600 D2549030613200 D2549030613400 D2549030613800 D2549030614000 D2549030614400 D2549030614800 R225401136-004 R225401136-018 R225401137-016 R225401145-006 R225401145-008 R225401145-010 R225401145-014 R225401152-008 R225401168-002 R225401168-008 R225401168-010 R225401168-012 R225401168-022 R225401168-024 R225401168-026 R225401172-000 R225401172-016 R225401172-018 R225401183-000 R225401183-002 R225401192-002 R225401196-004 R225401196-006 R225401196-036 R225401196-038 R225401196-044 R225401196-050 R225401196-052 R225401199-004 R225401199-006 R225401199-008 R225401605-002 R225401609-000 R225401611-010 R225401614-000 R225401619-002 R225401622-000 R225401622-002 R225401625-000 R225401629-000 R225401629-002 R225401639-000 R225401643-000 R225401643-004 R225401646-000 R225401647-000 R225401648-000 R225401648-002 R225401656-000 R225401656-002 R225401658-000 R225401693-000

1. Disassembly of the Electrical System (26M-1)

NOTE: **It is recommended that you only remove the components if they are damaged.**

(a) Remove the screw 26M-280, the washer 26M-290 and the clamp 26M-310 from the lavatory structure.

(b) Remove the nut 26M-300 and the washer 26M-290 from the lavatory structure.

(c) Remove the screws 26M-120, 26M-330, the washers 26M-030, 26M-320 and the nuts 26M-340 from the lavatory structure.

(d) Remove the ami cabin attendant seat cable 26M-350, the connector backshell 26M-390 and the plug connectors 26M-380, 26M-400 from the lavatory structure.

(e) Disconnect the cables, the applicable bonding straps 26M-230, 26M-240, 26M-250, 26M-260, 26M-270 and the cable harness assembly 26M-010 from the electrical components.

(f) See Disassembly of the Cable Harness Assembly for the disassembly procedure of the cable harness assembly 26M-010.

(g) Remove the screws 26M-040, the washers 26M-030, the nuts 26M-470, the smoke detector 26M-020 and the smoke detector sealing 26M-050 from the lavatory structure.

NOTE: For further instructions, see CMMV 26-16-16_F4885 (smoke detector).

(h) Remove the screws 26M-120, the washers 26M-030 and the brackets 26M-110 from the lavatory structure.

(i) Remove the call light 26M-100 from the lavatory structure.

NOTE: For further instructions, see CMMV 33-22-01_DD704 (call light).

(j) Remove the light assembly 26M-130 from the lavatory structure.

NOTE: For further instructions, see CMMV 33-27-01_DD704 (light assembly).

(k) Remove the loudspeaker 26M-180 from the lavatory structure.

NOTE: For further instructions, see CMMV 23-31-12_D7320 (loudspeaker).

(l) Remove the screws 26M-450, the spacers 26M-440 and the mini inverter 26M-430 from the lavatory structure.

NOTE: For further instructions, see CMMV 25-44-01_D2361 (mini inverter).

(m) Remove the screws 26M-200 and the microswitch 26M-190.

SUB TASK 25-41-51-040-088-B01
D2549030403600 D2549030611400

2. Disassembly of the Electrical System (26M-1)

NOTE: **It is recommended that you only remove the components if they are damaged.**

(a) Remove the screw 26M-280, the washer 26M-290 and the clamp 26M-310 from the lavatory structure.

(b) Remove the nut 26M-300 and the washer 26M-290 from the lavatory structure.

(c) Remove the screws 26M-120, 26M-330, the washers 26M-030, 26M-320 and the nuts 26M-340 from the lavatory structure.

(d) Remove the ami cabin attendant seat cable 26M-350, the connector backshell 26M-390 and the plug connectors 26M-380, 26M-400 from the lavatory structure.

(e) Disconnect the cables, the applicable bonding straps 26M-230, 26M-240, 26M-250, 26M-260, 26M-270 and the cable harness assembly 26M-010 from the electrical components.

(f) See Disassembly of the Cable Harness Assembly for the disassembly procedure of the cable harness assembly 26M-010.

(g) Remove the screws 26M-040, the washers 26M-030, the nuts 26M-470, the smoke detector 26M-020 and the smoke detector sealing 26M-050 from the lavatory structure.

NOTE: **For further instructions, see CMMV 26-16-16_F4885 (smoke detector).**

(h) Remove the screws 26M-120, the washers 26M-030 and the brackets 26M-110 from the lavatory structure.

(i) Remove the call light 26M-100 from the lavatory structure.

NOTE: **For further instructions, see CMMV 33-22-01_DD704 (call light).**

(j) Remove the light assembly 26M-130 from the lavatory structure.

NOTE: **For further instructions, see CMMV 33-27-01_DD704 (light assembly).**

(k) Remove the loudspeaker 26M-180 from the lavatory structure.

NOTE: For further instructions, see CMMV 23-31-12_D7320 (loudspeaker).

(l) Remove the screws 26M-200 and the microswitch 26M-190.

TASK 25-41-51-000-821-P01
D2549010609800 D2549010611800 D2549010614400 D2549020510400 D2549020514800 D2549020805000 D2549020805400 D2549020808200 D2549020809800 D2549020813200 D2549020813400 D2549020814200 D2549030404000 D2549030408000 D2549030613600 D2549030614600 R225401662-000

212. Disassembly of the Electrical System

A. General

A complete disassembly of the component is not necessary and not recommended.

Do not disassemble the component more than it is necessary for:

- Cleaning
- Visual Inspection
- Replacement of defective parts.

B. Job Set-up Information

(1) Not applicable

C. Procedure

WARNING: BE CAREFUL WHEN YOU USE SOLVENTS/CLEANING AGENTS, SEALANTS AND OTHER MATERIALS. OBEY THE MATERIAL MANUFACTURER'S INSTRUCTIONS AND THE LOCAL REGULATIONS. MAKE SURE THAT THERE IS A GOOD FLOW OF AIR THROUGH THE WORK AREA. DO NOT BREATHE THE FUMES. DO NOT SMOKE. DO NOT USE THESE MATERIALS NEAR A FLAME, SPARKS OR SOURCES OF HEAT. USE PROTECTIVE CLOTHING, GOGGLES AND GLOVES. IF YOU GET ONE OF THESE MATERIALS ON YOUR SKIN OR IN YOUR EYES, FLUSH IT AWAY WITH A FLOW OF CLEAN WATER. IF YOU GET ONE OF THESE MATERIALS IN YOUR MOUTH, GET IMMEDIATE MEDICAL AID. IN GENERAL, THESE MATERIALS ARE POISONOUS, FLAMMABLE AND SKIN IRRITANTS.

CAUTION: DO ALL THE WORK ON A CLEAN, SOFT SURFACE TO PREVENT DAMAGE TO THE COMPONENTS.

SUB TASK 25-41-51-040-089-A01
D2549010609800 D2549010611800 D2549020514800 D2549020805000

D2549020808200 D2549020809800 D2549020813200 D2549020813400
D2549020814200 D2549030408000 D2549030614600 R225401662-000

1. Disassembly of the Electrical System (26N-1)

NOTE: **See TABLE 3646 for the references for the replacement procedures of permanent installed parts.**

More data for bonded parts are given in column SEE REPAIR TASK. Use the data for the selection of the related repair solution.

IPL FIG. ITEM	COMPONENT PART NAME	IPL FIG. ITEM	REPLACEMENT PART NAME	SEE REPAIR TASK
26N-001 26N-470 26N-480 26N-500	Electrical System 2065VU Switch Panel Switch Housing Assembly Foil Assembly	26N-510 26N-520	Foil Adhesive Film	TBD self adhesive

Table 3646
Reference list for the replacement of permanent installed parts

NOTE: **It is recommended that you only remove the components if they are damaged.**

(a) Remove the screw 26N-280, the washer 26N-290 and the clamp 26N-310 from the lavatory structure.

(b) Remove the nut 26N-300 and the washer 26N-290 from the lavatory structure.

(c) Remove the ami cabin attendant seat cable 26N-350 as follows:

1 Remove the plug connectors 26N-380, 26N-400, the connector backshell 26N-390 and the ami cabin attendant seat cable 26N-350 from the lavatory structure.

(d) Disconnect the cables, the applicable bonding straps 26N-230, 26N-240, 26N-250, 26N-260, 26N-270 and the cable harness assembly 26N-010 from the electrical components.

(e) See Disassembly of the Cable Harness Assembly for the disassembly procedure of the cable harness assembly 26N-010.

(f) Remove the screws 26N-040, the washers 26N-030, the smoke detector 26N-020 and the smoke detector sealing 26N-050 from the lavatory structure.

NOTE: For further instructions, see CMMV 26-16-16_F4885 (smoke detector).

(g) Remove the screws 26N-120, the washers 26N-030 and the brackets 26N-110 from the lavatory structure.

(h) Remove the call light 26N-100 from the lavatory structure.

NOTE: For further instructions, see CMMV 33-22-01_DD704 (call light).

(i) Remove the light assembly 26N-130 from the lavatory structure.

NOTE: For further instructions, see CMMV 33-27-01_DD704 (light assembly).

(j) Remove the loudspeaker 26N-180 from the lavatory structure.

NOTE: For further instructions, see CMMV 23-31-12_D7320 (loudspeaker).

(k) Remove the screws 26N-450, the spacers 26N-440 and the mini inverter 26N-430 from the lavatory structure.

NOTE: For further instructions, see CMMV 25-44-01_D2361 (mini inverter).

(l) Remove and disassemble the 2065VU switch panel 26N-470 as follows:

1 Remove the plugs 26N-580 from the printed circuit board PCB 26N-530.

2 Remove and disassemble the switch housing assembly 26N-480 as follows:

a Remove the screws 26N-540, the spring washers 26N-550 and the switch housing 26N-490 from the printed circuit board PCB 26N-530.

3 Remove the protective lens 26N-570 from the switch button switch 26N-560.

4 Remove the switch button switch 26N-560 from the printed circuit board PCB 26N-530.

(m) Remove the screws 26N-120, 26N-330, the washers 26N-030, 26N-320 and the nuts 26N-340 from the lavatory structure.

(n) Remove the screws 26N-200 and the microswitch 26N-190.

SUB TASK 25-41-51-040-089-B01
D2549010614400 D2549020510400 D2549020805400 D2549030404000 D2549030613600

2. Disassembly of the Electrical System (26N-1)

NOTE: **See TABLE 3647 for the references for the replacement procedures of permanent installed parts.**

More data for bonded parts are given in column SEE REPAIR TASK. Use the data for the selection of the related repair solution.

IPL FIG. ITEM	COMPONENT PART NAME	IPL FIG. ITEM	REPLACEMENT PART NAME	SEE REPAIR TASK
26N-001 26N-470 26N-480 26N-500	Electrical System 2065VU Switch Panel Switch Housing Assembly Foil Assembly	26N-510 26N-520	Foil Adhesive Film	TBD self adhesive

Table 3647
Reference list for the replacement of permanent installed parts

NOTE: **It is recommended that you only remove the components if they are damaged.**

(a) Remove the screw 26N-280, the washer 26N-290 and the clamp 26N-310 from the lavatory structure.

(b) Remove the nut 26N-300 and the washer 26N-290 from the lavatory structure.

(c) Remove the screws 26N-275, the washers 26N-277 and the bonding straps 26N-273 from the electrical components.

(d) Remove the ami cabin attendant seat cable 26N-350 as follows:

1 Remove the plug connectors 26N-380, 26N-400, the connector backshell 26N-390 and the ami cabin attendant seat cable 26N-350 from the lavatory structure.

(e) Disconnect the cables, the applicable bonding straps 26N-230, 26N-240, 26N-250, 26N-260, 26N-270 and the cable harness assembly 26N-010 from the electrical components.

(f) See Disassembly of the Cable Harness Assembly for the disassembly procedure of the cable harness assembly 26N-010.

(g) Remove the screws 26N-040, the washers 26N-030, the smoke detector 26N-020 and the smoke detector sealing 26N-050 from the lavatory structure.

NOTE: For further instructions, see CMMV 26-16-16_F4885 (smoke detector).

(h) Remove the screws 26N-120, the washers 26N-030 and the brackets 26N-110 from the lavatory structure.

(i) Remove the call light 26N-100 from the lavatory structure.

NOTE: For further instructions, see CMMV 33-22-01_DD704 (call light).

(j) Remove the light assembly 26N-130 from the lavatory structure.

NOTE: For further instructions, see CMMV 33-27-01_DD704 (light assembly).

(k) Remove the loudspeaker 26N-180 from the lavatory structure.

NOTE: For further instructions, see CMMV 23-31-12_D7320 (loudspeaker).

(l) Remove the screws 26N-450, the spacers 26N-440 and the mini inverter 26N-430 from the lavatory structure.

NOTE: For further instructions, see CMMV 25-44-01_D2361 (mini inverter).

(m) Remove and disassemble the 2065VU switch panel 26N-470 as follows:

1 Remove the plugs 26N-580 from the printed circuit board PCB 26N-530.

2 Remove and disassemble the switch housing assembly 26N-480 as follows:

a Remove the screws 26N-540, the spring washers 26N-550 and the switch housing 26N-490 from the printed circuit board PCB 26N-530.

3 Remove the protective lens 26N-570 from the switch button switch 26N-560.

4 Remove the switch button switch 26N-560 from the printed circuit board PCB 26N-530.

(n) Remove the screws 26N-120, 26N-330, the washers 26N-030, 26N-320 and the nuts 26N-340 from the lavatory structure.

(o) Remove the screws 26N-200 and the microswitch 26N-190.

TASK 25-41-51-000-821-Q01

D2549010400800 D2549010402600 D2549010402800 D2549010403000 D2549010614800
D2549020400000 D2549020400400 D2549020403800 D2549020404200 D2549020404400
D2549020404600 D2549020404800 D2549020405000 D2549020405200 D2549020405400
D2549020405600 D2549020405800 D2549020406200 D2549020513800 D2549020806000
D2549020810200 D2549020810800 D2549020811200 D2549020811800 D2549020812600
D2549020813800 D2549030401000 D2549030401600 D2549030402400 D2549030404400
D2549030404600 D2549030405600 D2549030407000 D2549030407400 D2549030407600
D2549030407800 D2549030408200 D2549030408400 D2549030408600 D2549030410400
R225401134-036 R225401196-008 R225401196-010 R225401196-012 R225401196-014
R225401196-016 R225401196-040 R225401196-054 R225401196-056 R225401196-058
R225401196-060 R225401196-062 R225401199-000 R225401199-010 R225401611-006
R225401611-012 R225401639-002 R225401643-002 R225401662-002

213. Disassembly of the Electrical System

A. General

A complete disassembly of the component is not necessary and not recommended.

Do not disassemble the component more than it is necessary for:

- Cleaning
- Visual Inspection
- Replacement of defective parts.

B. Job Set-up Information

(1) Not applicable

C. Procedure

WARNING: BE CAREFUL WHEN YOU USE SOLVENTS/CLEANING AGENTS, SEALANTS AND OTHER MATERIALS. OBEY THE MATERIAL MANUFACTURER'S INSTRUCTIONS AND THE LOCAL REGULATIONS. MAKE SURE THAT THERE IS A GOOD FLOW OF AIR THROUGH THE WORK AREA. DO NOT BREATHE THE FUMES. DO NOT SMOKE. DO NOT USE THESE MATERIALS NEAR A FLAME, SPARKS OR SOURCES OF HEAT. USE PROTECTIVE CLOTHING, GOGGLES AND GLOVES. IF YOU GET ONE OF THESE MATERIALS ON YOUR SKIN OR IN YOUR EYES, FLUSH IT AWAY WITH A FLOW OF CLEAN WATER. IF YOU GET ONE OF THESE MATERIALS IN YOUR MOUTH, GET IMMEDIATE MEDICAL AID. IN GENERAL, THESE MATERIALS ARE POISONOUS, FLAMMABLE AND SKIN IRRITANTS.

CAUTION: **DO ALL THE WORK ON A CLEAN, SOFT SURFACE TO PREVENT DAMAGE TO THE COMPONENTS.**

SUB TASK 25-41-51-040-090-A01

D2549010400800 D2549010402800 D2549010403000 D2549010614800 D2549020400000 D2549020400400 D2549020403800 D2549020404200 D2549020404600 D2549020405200 D2549020405400 D2549020405600 D2549020405800 D2549020406200 D2549020513800 D2549020806000 D2549020810200 D2549020810800 D2549020811800 D2549020812600 D2549020813800 D2549030401600 D2549030405600 D2549030407000 D2549030407400 D2549030407600 D2549030407800 R225401196-008 R225401196-010 R225401196-012 R225401196-014 R225401196-016 R225401196-040 R225401196-054 R225401196-056 R225401196-058 R225401196-060 R225401196-062 R225401199-000 R225401199-010 R225401611-006 R225401611-012 R225401639-002 R225401643-002

1. Disassembly of the Electrical System (26P-1)

NOTE: **It is recommended that you only remove the components if they are damaged.**

(a) Remove the screw 26P-280, the washer 26P-290 and the clamp 26P-310 from the lavatory structure.

(b) Remove the nut 26P-300 and the washer 26P-290 from the lavatory structure.

(c) Remove the screws 26P-120, 26P-330, the washers 26P-030, 26P-320 and the nuts 26P-340 from the lavatory structure.

(d) Remove the ami cabin attendant seat cable 26P-350, the connector backshell 26P-390 and the plug connectors 26P-380, 26P-400 from the lavatory structure.

(e) Disconnect the cables, the applicable bonding straps 26P-230, 26P-240, 26P-250, 26P-260, 26P-270, 26P-313 and the cable harness assembly 26P-010 from the electrical components.

(f) See Disassembly of the Cable Harness Assembly for the disassembly procedure of the cable harness assembly 26P-010.

(g) Remove the screws 26P-040, the washers 26P-030, the smoke detector 26P-020 and the smoke detector sealing 26P-050 from the lavatory structure.

NOTE: **For further instructions, see CMMV 26-16-16_F4885 (smoke detector).**

(h) Remove the screws 26P-120, the washers 26P-030 and the brackets 26P-110 from the lavatory structure.

(i) Remove the call light 26P-100 from the lavatory structure.

NOTE: For further instructions, see CMMV 33-22-01_DD704 (call light).

(j) Remove the light assembly 26P-130 from the lavatory structure.

NOTE: For further instructions, see CMMV 33-27-01_DD704 (light assembly).

(k) Remove the loudspeaker 26P-180 from the lavatory structure.

NOTE: For further instructions, see CMMV 23-31-12_D7320 (loudspeaker).

(l) Remove the screws 26P-450, the spacers 26P-440 and the mini inverter 26P-430 from the lavatory structure.

NOTE: For further instructions, see CMMV 25-44-01_D2361 (mini inverter).

(m) Remove the screws 26P-200 and the microswitch 26P-190.

SUB TASK 25-41-51-040-090-B01
D2549020811200 D2549030401000 D2549030402400 D2549030404400

2. Disassembly of the Electrical System (26P-1)

NOTE: It is recommended that you only remove the components if they are damaged.

(a) Remove the screw 26P-280, the washer 26P-290 and the clamp 26P-310 from the lavatory structure.

(b) Remove the nut 26P-300 and the washer 26P-290 from the lavatory structure.

(c) Remove the screws 26P-120, 26P-330, the washers 26P-030, 26P-320 and the nuts 26P-340 from the lavatory structure.

(d) Remove the ami cabin attendant seat cable 26P-350, the connector backshell 26P-390 and the plug connectors 26P-380, 26P-400 from the lavatory structure.

(e) Disconnect the cables, the applicable bonding straps 26P-230, 26P-240, 26P-250, 26P-260, 26P-270, 26P-313 and the cable harness assembly 26P-010 from the electrical components.

(f) See Disassembly of the Cable Harness Assembly for the disassembly procedure of the cable harness assembly 26P-010.

(g) Remove the screws 26P-040, the washers 26P-030, the smoke detector 26P-020 and the smoke detector sealing 26P-050 from the lavatory structure.

NOTE: For further instructions, see CMMV 26-16-16_F4885 (smoke detector).

(h) Remove the screws 26P-120, the washers 26P-030 and the brackets 26P-110 from the lavatory structure.

(i) Remove the call light 26P-100 from the lavatory structure.

NOTE: For further instructions, see CMMV 33-22-01_DD704 (call light).

(j) Remove the light assembly 26P-130 from the lavatory structure.

NOTE: For further instructions, see CMMV 33-27-01_DD704 (light assembly).

(k) Remove the loudspeaker 26P-180 from the lavatory structure.

NOTE: For further instructions, see CMMV 23-31-12_D7320 (loudspeaker).

(l) Remove the screws 26P-200 and the microswitch 26P-190.

SUB TASK 25-41-51-040-090-C01
D2549030404600 R225401134-036

3. Disassembly of the Electrical System (26P-1)

NOTE: It is recommended that you only remove the components if they are damaged.

(a) Remove the screw 26P-280, the washer 26P-290 and the clamp 26P-310 from the lavatory structure.

(b) Remove the nut 26P-300 and the washer 26P-290 from the lavatory structure.

(c) Remove the screws 26P-120, 26P-330, the washers 26P-030, 26P-320 and the nuts 26P-340 from the lavatory structure.

(d) Remove the ami cabin attendant seat cable 26P-350, the connector backshell 26P-390 and the plug connectors 26P-380, 26P-400 from the lavatory structure.

(e) Disconnect the cables, the applicable bonding straps 26P-230, 26P-240, 26P-250, 26P-260, 26P-270, 26P-313 and the cable harness assembly 26P-010 from the electrical components.

(f) See Disassembly of the Cable Harness Assembly for the disassembly procedure of the cable harness assembly 26P-010.

(g) Remove the screws 26P-040, the washers 26P-030, the smoke detector 26P-020 and the smoke detector sealing 26P-050 from the lavatory structure.

NOTE: For further instructions, see CMMV 26-16-16_F4885 (smoke detector).

(h) Remove the screws 26P-120, the washers 26P-030 and the brackets 26P-110 from the lavatory structure.

(i) Remove the call light 26P-100 from the lavatory structure.

NOTE: For further instructions, see CMMV 33-20-01_DD704 (call light).

(j) Remove the light assembly 26P-130 from the lavatory structure.

NOTE: For further instructions, see CMMV 33-27-01_DD704 (light assembly).

(k) Remove the loudspeaker 26P-180 from the lavatory structure.

NOTE: For further instructions, see CMMV 23-31-12_D7320 (loudspeaker).

(l) Remove the screws 26P-450, the spacers 26P-440 and the mini inverter 26P-430 from the lavatory structure.

NOTE: For further instructions, see CMMV 25-44-01_D2361 (mini inverter).

(m) Remove the screws 26P-200 and the microswitch 26P-190.

SUB TASK 25-41-51-040-090-D01
D2549010402600 D2549020404800 D2549020405000 D2549030408200 D2549030408400 D2549030408600 D2549030410400 R225401662-002

4. Disassembly of the Electrical System (26P-1)

NOTE: **See TABLE 3648 for the references for the replacement procedures of permanent installed parts.**

More data for bonded parts are given in column SEE REPAIR TASK. Use the data for the selection of the related repair solution.

IPL FIG. ITEM	COMPONENT PART NAME	IPL FIG. ITEM	REPLACEMENT PART NAME	SEE REPAIR TASK
26P-001 26P-470 26P-480 26P-500	Electrical System 2065VU Switch Panel Switch Housing Assembly Foil Assembly	26P-510 26P-520	Foil Adhesive Film	TBD self adhesive

Table 3648
Reference list for the replacement of permanent installed parts

NOTE: **It is recommended that you only remove the components if they are damaged.**

(a) Remove the screw 26P-280, the washer 26P-290 and the clamp 26P-310 from the lavatory structure.

(b) Remove the nut 26P-300 and the washer 26P-290 from the lavatory structure.

(c) Remove the screws 26P-120, 26P-330, the washers 26P-030, 26P-320 and the nuts 26P-340 from the lavatory structure.

(d) Remove the ami cabin attendant seat cable 26P-350, the connector backshell 26P-390 and the plug connectors 26P-380, 26P-400 from the lavatory structure.

(e) Disconnect the cables, the applicable bonding straps 26P-230, 26P-240, 26P-250, 26P-260, 26P-270, 26P-313, 26P-315 and the cable harness assembly 26P-010 from the electrical components.

(f) See Disassembly of the Cable Harness Assembly for the disassembly procedure of the cable harness assembly 26P-010.

(g) Remove the screws 26P-040, the washers 26P-030, the smoke detector 26P-020 and the smoke detector sealing 26P-050 from the lavatory structure.

NOTE: For further instructions, see CMMV 26-16-16_F4885 (smoke detector).

(h) Remove the screws 26P-120, the washers 26P-030 and the brackets 26P-110 from the lavatory structure.

(i) Remove the call light 26P-100 from the lavatory structure.

NOTE: For further instructions, see CMMV 33-22-01_DD704 (call light).

(j) Remove the light assembly 26P-130 from the lavatory structure.

NOTE: For further instructions, see CMMV 33-27-01_DD704 (light assembly).

(k) Remove the loudspeaker 26P-180 from the lavatory structure.

NOTE: For further instructions, see CMMV 23-31-12_D7320 (loudspeaker).

(l) Remove the screws 26P-450, the spacers 26P-440 and the mini inverter 26P-430 from the lavatory structure.

NOTE: For further instructions, see CMMV 25-44-01_D2361 (mini inverter).

(m) Remove and disassemble the 2065VU switch panel 26P-470 as follows:

1 Remove the plugs 26P-580 from the printed circuit board PCB 26P-530.

2 Remove and disassemble the switch housing assembly 26P-480 as follows:

a Remove the screws 26P-540, the spring washers 26P-550 and the switch housing 26P-490 from the printed circuit board PCB 26P-530.

3 Remove the protective lens 26P-570 from the switch button switch 26P-560.

4 Remove the switch button switch 26P-560 from the printed circuit board PCB 26P-530.

(n) Remove the screws 26P-200 and the microswitch 26P-190.

SUB TASK 25-41-51-040-090-E01
D2549020404400

5. Disassembly of the Electrical System (26P-1)

NOTE: **It is recommended that you only remove the components if they are damaged.**

(a) Remove the screw 26P-280, the washer 26P-290 and the clamp 26P-310 from the lavatory structure.

(b) Remove the nut 26P-300 and the washer 26P-290 from the lavatory structure.

(c) Remove the screws 26P-120, 26P-330, the washers 26P-030, 26P-320 and the nuts 26P-340 from the lavatory structure.

(d) Remove the ami cabin attendant seat cable 26P-350, the connector backshell 26P-390 and the plug connectors 26P-380, 26P-400 from the lavatory structure.

(e) Disconnect the cables, the applicable bonding straps 26P-230, 26P-240, 26P-250, 26P-260, 26P-270, 26P-313, 26P-315 and the cable harness assembly 26P-010 from the electrical components.

(f) See Disassembly of the Cable Harness Assembly for the disassembly procedure of the cable harness assembly 26P-010.

(g) Remove the screws 26P-040, the washers 26P-030, the smoke detector 26P-020 and the smoke detector sealing 26P-050 from the lavatory structure.

NOTE: **For further instructions, see CMMV 26-16-16_F4885 (smoke detector).**

(h) Remove the screws 26P-120, the washers 26P-030 and the brackets 26P-110 from the lavatory structure.

(i) Remove the call light 26P-100 from the lavatory structure.

NOTE: **For further instructions, see CMMV 33-22-01_DD704 (call light).**

(j) Remove the light assembly 26P-130 from the lavatory structure.

NOTE: **For further instructions, see CMMV 33-27-01_DD704 (light assembly).**

(k) Remove the loudspeaker 26P-180 from the lavatory structure.

NOTE: For further instructions, see CMMV 23-31-12_D7320 (loudspeaker).

(l) Remove the screws 26P-450, the spacers 26P-440 and the mini inverter 26P-430 from the lavatory structure.

NOTE: For further instructions, see CMMV 25-44-01_D2361 (mini inverter).

(m) Remove the screws 26P-200 and the microswitch 26P-190.

TASK 25-41-51-000-821-R01
D2549020507800 D2549020605800 D2549020708400 D2549020812800 D2549040500200 D2549040500400 D2549040500600 D2549040500800 D2549040501000 R225401673-000 R225401673-002 R225401673-004

214. Disassembly of the Electrical System

A. General

A complete disassembly of the component is not necessary and not recommended.

Do not disassemble the component more than it is necessary for:

- Cleaning
- Visual Inspection
- Replacement of defective parts.

B. Job Set-up Information

(1) Not applicable

C. Procedure

WARNING: BE CAREFUL WHEN YOU USE SOLVENTS/CLEANING AGENTS, SEALANTS AND OTHER MATERIALS. OBEY THE MATERIAL MANUFACTURER'S INSTRUCTIONS AND THE LOCAL REGULATIONS. MAKE SURE THAT THERE IS A GOOD FLOW OF AIR THROUGH THE WORK AREA. DO NOT BREATHE THE FUMES. DO NOT SMOKE. DO NOT USE THESE MATERIALS NEAR A FLAME, SPARKS OR SOURCES OF HEAT. USE PROTECTIVE CLOTHING, GOGGLES AND GLOVES. IF YOU GET ONE OF THESE MATERIALS ON YOUR SKIN OR IN YOUR EYES, FLUSH IT AWAY WITH A FLOW OF CLEAN WATER. IF YOU GET ONE OF THESE MATERIALS IN YOUR MOUTH, GET IMMEDIATE MEDICAL AID. IN GENERAL, THESE MATERIALS ARE POISONOUS, FLAMMABLE AND SKIN IRRITANTS.

CAUTION: DO ALL THE WORK ON A CLEAN, SOFT SURFACE TO PREVENT DAMAGE TO THE COMPONENTS.

SUB TASK 25-41-51-040-091-A01
D2549040500200 D2549040500400 D2549040500600 D2549040500800 D2549040501000 R225401673-000 R225401673-002 R225401673-004

1. Disassembly of the Electrical System (26Q-1)

NOTE: **It is recommended that you only remove the components if they are damaged.**

(a) Remove the screw 26Q-320, the washer 26Q-330 and the clamp 26Q-350 from the lavatory structure.

(b) Remove the nut 26Q-340 and the washer 26Q-330 from the lavatory structure.

(c) Remove the screws 26Q-130 and the washers 26Q-140 from the lavatory structure.

(d) Remove the ami cabin attendant seat cable 26Q-390, the connector backshell 26Q-430 and the plug connectors 26Q-420, 26Q-440 from the lavatory structure.

(e) Remove the screws 26Q-130, the washers 26Q-140 and the brackets 26Q-210 from the lavatory structure.

(f) Disconnect the cables, the applicable bonding straps 26Q-270, 26Q-280, 26Q-290, 26Q-300, 26Q-310 and the cable harness assembly 26Q-010 from the electrical components.

(g) See Disassembly of the Cable Harness Assembly for the disassembly procedure of the cable harness assembly 26Q-010.

(h) Remove the screws 26Q-040, the nuts 26Q-050, the smoke detector 26Q-020 and the smoke detector sealing 26Q-030 from the lavatory structure.

NOTE: **For further instructions, see CMMV 26-18-18_F4885 (smoke detector).**

(i) Remove the screws 26Q-130, the washers 26Q-140 and the bracket 26Q-120 from the lavatory structure.

(j) Remove the call light 26Q-110 from the lavatory structure.

NOTE: **For further instructions, see CMMV 33-22-01_DD704 (call light).**

(k) Remove the light assembly 26Q-150 from the lavatory structure.

NOTE: **For further instructions, see CMMV 33-27-01_DD704 (light assembly).**

(l) Remove the screws 26Q-130 and the washers 26Q-140 from the lavatory structure.

(m) Remove the loudspeaker 26Q-240 from the lavatory structure.

NOTE: For further instructions, see CMMV 23-31-12_D7320 (loudspeaker).

(n) Remove the screws 26Q-380, the spacers 26Q-370 and the mini inverter 26Q-360 from the lavatory structure.

NOTE: For further instructions, see CMMV 25-44-01_D2361 (mini inverter).

(o) Remove the screws 26Q-260 and the microswitch 26Q-250.

SUB TASK 25-41-51-040-091-B01
D2549020507800 D2549020605800 D2549020708400 D2549020812800

2. Disassembly of the Electrical System (26Q-1)

NOTE: It is recommended that you only remove the components if they are damaged.

(a) Remove the screw 26Q-320, the washer 26Q-330 and the clamp 26Q-350 from the lavatory structure.

(b) Remove the nut 26Q-340 and the washer 26Q-330 from the lavatory structure.

(c) Remove the screws 26Q-130 and the washers 26Q-140 from the lavatory structure.

(d) Remove the ami cabin attendant seat cable 26Q-390, the connector backshell 26Q-430 and the plug connectors 26Q-420, 26Q-440 from the lavatory structure.

(e) Remove the screws 26Q-130, the washers 26Q-140 and the brackets 26Q-210 from the lavatory structure.

(f) Disconnect the cables, the applicable bonding straps 26Q-270, 26Q-280, 26Q-290, 26Q-300, 26Q-310 and the cable harness assembly 26Q-010 from the electrical components.

(g) See Disassembly of the Cable Harness Assembly for the disassembly procedure of the cable harness assembly 26Q-010.

(h) Remove the screws 26Q-040, the washers 26Q-145, the nuts 26Q-050, the smoke detector 26Q-020 and the smoke detector sealing 26Q-030 from the lavatory structure.

NOTE: For further instructions, see CMMV 26-18-18_F4885 (smoke detector).

(i) Remove the screws 26Q-130, the washers 26Q-140 and the bracket 26Q-120 from the lavatory structure.

(j) Remove the call light 26Q-110 from the lavatory structure.

NOTE: For further instructions, see CMMV 33-22-01_DD704 (call light).

(k) Remove the light assembly 26Q-150 from the lavatory structure.

NOTE: For further instructions, see CMMV 33-27-01_DD704 (light assembly).

(l) Remove the screws 26Q-130 and the washers 26Q-140 from the lavatory structure.

(m) Remove the loudspeaker 26Q-240 from the lavatory structure.

NOTE: For further instructions, see CMMV 23-31-12_D7320 (loudspeaker).

(n) Remove the screws 26Q-380, the spacers 26Q-370 and the mini inverter 26Q-360 from the lavatory structure.

NOTE: For further instructions, see CMMV 25-44-01_D2361 (mini inverter).

(o) Remove the screws 26Q-260 and the microswitch 26Q-250.

TASK 25-41-51-000-821-S01

D2547160900200 D2547160900400 D2549010401000 D2549010401400 D2549010401600
D2549010401800 D2549010402200 D2549010402400 D2549010403200 D2549010403400
D2549010403600 D2549010403800 D2549010404000 D2549010404200 D2549010404400
D2549010404600 D2549010404800 D2549010405000 D2549010405400 D2549010405800
D2549010406000 D2549010406200 D2549010406400 D2549010406800 D2549010407000
D2549010510600 D2549010610600 D2549010613600 D2549020300000 D2549020300400
D2549020300600 D2549020300800 D2549020301000 D2549020301800 D2549020302000
D2549020302800 D2549020400600 D2549020400800 D2549020401000 D2549020401200
D2549020401400 D2549020401600 D2549020402000 D2549020402200 D2549020402400
D2549020402600 D2549020403000 D2549020403200 D2549020403400 D2549020403600
D2549020404000 D2549020406000 D2549020406400 D2549020406600 D2549020406800
D2549020407000 D2549020407200 D2549020407400 D2549020407600 D2549020407800
D2549020408000 D2549020408200 D2549020408600 D2549020408800 D2549020409000
D2549020409200 D2549020409400 D2549020409600 D2549020409800 D2549020410200
D2549020410400 D2549020410600 D2549020410800 D2549020411000 D2549020411400
D2549020411600 D2549020411800 D2549020412600 D2549020412800 D2549020413000
D2549020413400 D2549020414200 D2549020700200 D2549020804400 D2549020807200
D2549020809600 D2549030409000 D2549030409200 D2549030409400 D2549030410000
D2549030410200 D2549030410600 D2549030411200 D2549030411400 D2549030411600
D2549030411800 D2549030412000 D2549030412200 D2549030412400 D2549030412600
D2549030412800 D2549030413200 D2549030413400 D2549030413600 D2549030414400
D2549030414800 D2549030700200 D2549030700400 D2549030701000 D2549030702600
D2549030703400 D2549030703600 D2549030704200 D2549030704400 D2549030705200
R225401134-014 R225401134-038 R225401136-006 R225401136-012 R225401136-024
R225401152-010 R225401183-004 R225401183-006 R225401196-018 R225401196-020
R225401196-022 R225401196-024 R225401196-042 R225401196-064 R225401196-066
R225401196-068 R225401196-070 R225401199-012 R225401602-000 R225401611-000
R225401611-014 R225401611-016 R225401611-018 R225401624-000 R225401627-000
R225401627-002 R225401627-004 R225401643-006 R225401643-008 R225401646-002
R225401648-004 R225401648-006 R225401648-008 R225401649-000 R225401675-000
R225401676-000 R225401683-000 R225401685-000 R225401685-002 R225401688-000
R225401689-004 R225401689-006 R225401811-000

215. Disassembly of the Electrical System

A. General

A complete disassembly of the component is not necessary and not recommended.

Do not disassemble the component more than it is necessary for:

- Cleaning
- Visual Inspection
- Replacement of defective parts.

B. Job Set-up Information

(1) Not applicable

C. Procedure

WARNING: **BE CAREFUL WHEN YOU USE SOLVENTS/CLEANING AGENTS, SEALANTS AND OTHER MATERIALS. OBEY THE MATERIAL MANUFACTURER'S INSTRUCTIONS AND THE LOCAL REGULATIONS. MAKE SURE THAT THERE IS A GOOD FLOW OF AIR THROUGH THE WORK AREA. DO NOT BREATHE THE FUMES. DO NOT SMOKE. DO NOT USE THESE MATERIALS NEAR A FLAME, SPARKS OR SOURCES OF HEAT. USE PROTECTIVE CLOTHING, GOGGLES AND GLOVES. IF YOU GET ONE OF THESE MATERIALS ON YOUR SKIN OR IN YOUR EYES, FLUSH IT AWAY WITH A FLOW OF CLEAN WATER. IF YOU GET ONE OF THESE MATERIALS IN YOUR MOUTH, GET IMMEDIATE MEDICAL AID. IN GENERAL, THESE MATERIALS ARE POISONOUS, FLAMMABLE AND SKIN IRRITANTS.**

CAUTION: **DO ALL THE WORK ON A CLEAN, SOFT SURFACE TO PREVENT DAMAGE TO THE COMPONENTS.**

SUB TASK 25-41-51-040-092-A01

D2547160900200 D2547160900400 D2549010401000 D2549010401400
D2549010401800 D2549010403600 D2549010404200 D2549010404400
D2549010405400 D2549010406000 D2549010406200 D2549010406800
D2549020300000 D2549020300400 D2549020300800 D2549020301000
D2549020302000 D2549020302800 D2549020400600 D2549020401400
D2549020402000 D2549020402400 D2549020402600 D2549020403200
D2549020403400 D2549020403600 D2549020404000 D2549020406000
D2549020406400 D2549020406600 D2549020406800 D2549020407000
D2549020407400 D2549020407600 D2549020407800 D2549020408000
D2549020408600 D2549020408800 D2549020409000 D2549020409200
D2549020409400 D2549020409600 D2549020410400 D2549020411000
D2549020411400 D2549020411600 D2549020412600 D2549020413000
D2549020804400 D2549020807200 D2549020809600 D2549030409200
D2549030410000 D2549030410200 D2549030410600 D2549030411200
D2549030411400 D2549030411600 D2549030411800 D2549030412400
D2549030412600 D2549030413200 D2549030413600 D2549030414400
D2549030414800 D2549030700400 D2549030701000 D2549030703400
D2549030703600 R225401136-006 R225401136-012 R225401136-024 R225401152-

010 R225401196-018 R225401196-020 R225401196-022 R225401196-024 R225401196-042 R225401196-064 R225401196-066 R225401196-068 R225401196-070 R225401199-012 R225401602-000 R225401611-000 R225401611-014 R225401611-016 R225401611-018 R225401627-000 R225401627-002 R225401627-004 R225401643-006 R225401643-008 R225401646-002 R225401648-004 R225401648-006 R225401648-008 R225401649-000 R225401675-000 R225401683-000 R225401688-000

1. Disassembly of the Electrical System (26R-1)

NOTE: **It is recommended that you only remove the components if they are damaged.**

(a) Remove the screw 26R-300, the washer 26R-310 and the clamp 26R-330 from the lavatory structure.

(b) Remove the nut 26R-320 and the washer 26R-310 from the lavatory structure.

(c) Remove the screws 26R-120, 26R-340, the washers 26R-130 and the cable ties 26R-190 from the lavatory structure.

(d) Remove the ami cabin attendant seat cable 26R-350, the connector backshell 26R-390 and the plug connectors 26R-380, 26R-400 from the lavatory structure.

(e) Disconnect the cables, the applicable bonding straps 26R-250, 26R-260, 26R-270, 26R-280, 26R-290 and the cable harness assembly 26R-010 from the electrical components.

(f) See Disassembly of the Cable Harness Assembly for the disassembly procedure of the cable harness assembly 26R-010.

(g) Remove the screws 26R-040, the nuts 26R-050, the smoke detector 26R-020 and the smoke detector sealing 26R-030 from the lavatory structure.

NOTE: **For further instructions, see CMMV 26-16-16_F4885 (smoke detector).**

(h) Remove the screws 26R-120, the washers 26R-130 and the brackets 26R-110 from the lavatory structure.

(i) Remove the call light 26R-100 from the lavatory structure.

NOTE: **For further instructions, see CMMV 33-22-01_DD704 (call light).**

(j) Remove the light assembly 26R-140 from the lavatory structure.

NOTE: For further instructions, see CMMV 33-27-01_DD704 (light assembly).

(k) Remove the loudspeaker 26R-220 from the lavatory structure.

NOTE: For further instructions, see CMMV 23-31-12_D7320 (loudspeaker).

(l) Remove the screws 26R-460, the spacers 26R-470 and the mini inverter 26R-450 from the lavatory structure.

NOTE: For further instructions, see CMMV 25-44-01_D2361 (mini inverter).

(m) Remove the screws 26R-240 and the microswitch 26R-230.

SUB TASK 25-41-51-040-092-B01
D2549010402200 D2549010403800 D2549010405000 D2549010405800 D2549010407000 D2549020400800 D2549020401600 D2549020408200 D2549020410200 D2549020410800 D2549020411800 D2549020414200 D2549030409400 D2549030412800 D2549030705200 R225401624-000 R225401676-000 R225401689-004 R225401689-006

2. Disassembly of the Electrical System (26R-1)

NOTE: See TABLE 3649 for the references for the replacement procedures of permanent installed parts.
More data for bonded parts are given in column SEE REPAIR TASK. Use the data for the selection of the related repair solution.

IPL FIG. ITEM	COMPONENT PART NAME	IPL FIG. ITEM	REPLACEMENT PART NAME	SEE REPAIR TASK
26R-001 26R-480 26R-490 26R-510	Electrical System 2065VU Switch Panel Switch Housing Assembly Foil Assembly	26R-520 26R-530	Foil Adhesive Film	Replacement of the Bonded Parts self adhesive

Table 3649
Reference list for the replacement of permanent installed parts

NOTE: **It is recommended that you only remove the components if they are damaged.**

(a) Remove the screw 26R-300, the washer 26R-310 and the clamp 26R-330 from the lavatory structure.

(b) Remove the nut 26R-320 and the washer 26R-310 from the lavatory structure.

(c) Remove the screws 26R-120, 26R-340, the washers 26R-130 and the cable ties 26R-190 from the lavatory structure.

(d) Remove the ami cabin attendant seat cable 26R-350, the connector backshell 26R-390 and the plug connectors 26R-380, 26R-400 from the lavatory structure.

(e) Disconnect the cables, the applicable bonding straps 26R-250, 26R-260, 26R-270, 26R-280, 26R-290 and the cable harness assembly 26R-010 from the electrical components.

(f) See Disassembly of the Cable Harness Assembly and Disassembly of the Cable Harness Assembly for the disassembly procedure of the cable harness assembly 26R-010.

(g) Remove the screws 26R-040, the nuts 26R-050, the smoke detector 26R-020 and the smoke detector sealing 26R-030 from the lavatory structure.

NOTE: **For further instructions, see CMMV 26-16-16_F4885 (smoke detector).**

(h) Remove the screws 26R-120, the washers 26R-130 and the brackets 26R-110 from the lavatory structure.

(i) Remove the call light 26R-100 from the lavatory structure.

NOTE: **For further instructions, see CMMV 33-22-01_DD704 (call light).**

(j) Remove the light assembly 26R-140 from the lavatory structure.

NOTE: **For further instructions, see CMMV 33-27-01_DD704 (light assembly).**

(k) Remove the loudspeaker 26R-220 from the lavatory structure.

NOTE: **For further instructions, see CMMV 23-31-12_D7320 (loudspeaker).**

(l) Remove the screws 26R-460, the spacers 26R-470 and the mini inverter 26R-450 from the lavatory structure.

NOTE: For further instructions, see CMMV 25-44-01_D2361 (mini inverter).

(m) Remove and disassemble the 2065VU switch panel 26R-480 as follows:

1 Remove the plugs 26R-590 from the printed circuit board PCB 26R-540.

2 Remove and disassemble the switch housing assembly 26R-490 as follows:
a Remove the screws 26R-550, the spring washers 26R-560 and the switch housing 26R-500 from the printed circuit board PCB 26R-540.

3 Remove the protective lens 26R-580 from the switch button switch 26R-570.

4 Remove the switch button switch 26R-570 from the printed circuit board PCB 26R-540.

(n) Remove the screws 26R-240 and the microswitch 26R-230.

SUB TASK 25-41-51-040-092-C01
D2549020401200 D2549020413400 D2549030700200 D2549030702600

3. Disassembly of the Electrical System (26R-1)

NOTE: It is recommended that you only remove the components if they are damaged.

(a) Remove the screw 26R-300, the washer 26R-310 and the clamp 26R-330 from the lavatory structure.

(b) Remove the nut 26R-320 and the washer 26R-310 from the lavatory structure.

(c) Remove the screws 26R-120, 26R-340, the washers 26R-130 and the cable ties 26R-190 from the lavatory structure.

(d) Remove the ami cabin attendant seat cable 26R-350, the connector backshell 26R-390 and the plug connectors 26R-380, 26R-400 from the lavatory structure.

(e) Disconnect the cables, the applicable bonding straps 26R-250, 26R-260, 26R-270, 26R-280, 26R-290 and the cable harness assembly 26R-010 from the electrical components.

(f) See Disassembly of the Cable Harness Assembly for the disassembly procedure of the cable harness assembly 26R-010.

(g) Remove the screws 26R-040, the nuts 26R-050, the smoke detector 26R-020 and the smoke detector sealing 26R-030 from the lavatory structure.

NOTE: For further instructions, see CMMV 26-16-16_F4885 (smoke detector).

(h) Remove the screws 26R-120, the washers 26R-130 and the brackets 26R-110 from the lavatory structure.

(i) Remove the call light 26R-100 from the lavatory structure.

NOTE: For further instructions, see CMMV 33-22-01_DD704 (call light).

(j) Remove the light assembly 26R-140 from the lavatory structure.

NOTE: For further instructions, see CMMV 33-27-01_DD704 (light assembly).

(k) Remove the loudspeaker 26R-220 from the lavatory structure.

NOTE: For further instructions, see CMMV 23-31-12_D7320 (loudspeaker).

(l) Remove the screws 26R-240 and the microswitch 26R-230.

SUB TASK 25-41-51-040-092-D01
D2549010404000 D2549020402200 D2549020407200 D2549030412000

4. Disassembly of the Electrical System (26R-1)

NOTE: **See TABLE 3650 for the references for the replacement procedures of permanent installed parts.**

More data for bonded parts are given in column SEE REPAIR TASK. Use the data for the selection of the related repair solution.

IPL FIG. ITEM	COMPONENT PART NAME	IPL FIG. ITEM	REPLACEMENT PART NAME	SEE REPAIR TASK
26R-001 26R-480 26R-490 26R-510	Electrical System 2065VU Switch Panel Switch Housing Assembly Foil Assembly	26R-520 26R-530	Foil Adhesive Film	Replacement of the Bonded Parts self adhesive

Table 3650
Reference list for the replacement of permanent installed parts

NOTE: **It is recommended that you only remove the components if they are damaged.**

(a) Remove the screw 26R-300, the washer 26R-310 and the clamp 26R-330 from the lavatory structure.

(b) Remove the nut 26R-320 and the washer 26R-310 from the lavatory structure.

(c) Remove the screws 26R-120, 26R-340, the washers 26R-130 and the cable ties 26R-190 from the lavatory structure.

(d) Remove the screws 26R-325, the washers 26R-335 and the bonding strap 26R-295 from the electrical components.

(e) Remove the ami cabin attendant seat cable 26R-350, the connector backshell 26R-390 and the plug connectors 26R-380, 26R-400 from the lavatory structure.

(f) Disconnect the cables, the applicable bonding straps 26R-250, 26R-260, 26R-270, 26R-280, 26R-290 and the cable harness assembly 26R-010 from the electrical components.

(g) See Disassembly of the Cable Harness Assembly for the disassembly procedure of the cable harness assembly 26R-010.

(h) Remove the screws 26R-040, the nuts 26R-050, the smoke detector 26R-020 and the smoke detector sealing 26R-030 from the lavatory structure.

NOTE: For further instructions, see CMMV 26-16-16_F4885 (smoke detector).

(i) Remove the screws 26R-120, the washers 26R-130 and the brackets 26R-110 from the lavatory structure.

(j) Remove the call light 26R-100 from the lavatory structure.

NOTE: For further instructions, see CMMV 33-22-01_DD704 (call light).

(k) Remove the light assembly 26R-140 from the lavatory structure.

NOTE: For further instructions, see CMMV 33-27-01_DD704 (light assembly).

(l) Remove the loudspeaker 26R-220 from the lavatory structure.

NOTE: For further instructions, see CMMV 23-31-12_D7320 (loudspeaker).

(m) Remove the screws 26R-460, the spacers 26R-470 and the mini inverter 26R-450 from the lavatory structure.

NOTE: For further instructions, see CMMV 25-44-01_D2361 (mini inverter).

(n) Remove and disassemble the 2065VU switch panel 26R-480 as follows:

1 Remove the plugs 26R-590 from the printed circuit board PCB 26R-540.

2 Remove and disassemble the switch housing assembly 26R-490 as follows:

a Remove the screws 26R-550, the spring washers 26R-560 and the switch housing 26R-500 from the printed circuit board PCB 26R-540.

3 Remove the protective lens 26R-580 from the switch button switch 26R-570.

4 Remove the switch button switch 26R-570 from the printed circuit board PCB 26R-540.

(o) Remove the screws 26R-240 and the microswitch 26R-230.

SUB TASK 25-41-51-040-092-E01
D2549010403200 D2549010404600 D2549010404800 D2549010610600 D2549020412800 R225401183-004 R225401183-006 R225401685-000 R225401685-002 R225401811-000

5. Disassembly of the Electrical System (26R-1)

NOTE: **It is recommended that you only remove the components if they are damaged.**

(a) Remove the screw 26R-300, the washer 26R-310 and the clamp 26R-330 from the lavatory structure.

(b) Remove the nut 26R-320 and the washer 26R-310 from the lavatory structure.

(c) Remove the screws 26R-120, 26R-340, the washers 26R-130 and the cable ties 26R-190 from the lavatory structure.

(d) Remove the screws 26R-325, the washers 26R-335 and the bonding strap 26R-295 from the electrical components.

(e) Remove the ami cabin attendant seat cable 26R-350, the connector backshell 26R-390 and the plug connectors 26R-380, 26R-400 from the lavatory structure.

(f) Disconnect the cables, the applicable bonding straps 26R-250, 26R-260, 26R-270, 26R-280, 26R-290 and the cable harness assembly 26R-010 from the electrical components.

(g) See Disassembly of the Cable Harness Assembly for the disassembly procedure of the cable harness assembly 26R-010.

(h) Remove the screws 26R-040, the nuts 26R-050, the smoke detector 26R-020 and the smoke detector sealing 26R-030 from the lavatory structure.

NOTE: **For further instructions, see CMMV 26-16-16_F4885 (smoke detector).**

(i) Remove the screws 26R-120, the washers 26R-130 and the brackets 26R-110 from the lavatory structure.

(j) Remove the call light 26R-100 from the lavatory structure.

NOTE: **For further instructions, see CMMV 33-22-01_DD704 (call light).**

(k) Remove the light assembly 26R-140 from the lavatory structure.

NOTE: For further instructions, see CMMV 33-27-01_DD704 (light assembly).

(l) Remove the loudspeaker 26R-220 from the lavatory structure.

NOTE: For further instructions, see CMMV 23-31-12_D7320 (loudspeaker).

(m) Remove the screws 26R-460, the spacers 26R-470 and the mini inverter 26R-450 from the lavatory structure.

NOTE: For further instructions, see CMMV 25-44-01_D2361 (mini inverter).

(n) Remove the screws 26R-240 and the microswitch 26R-230.

SUB TASK 25-41-51-040-092-F01
D2549020403000 D2549030409000 R225401134-014 R225401134-038

6. Disassembly of the Electrical System (26R-1)

NOTE: It is recommended that you only remove the components if they are damaged.

(a) Remove the screw 26R-300, the washer 26R-310 and the clamp 26R-330 from the lavatory structure.

(b) Remove the nut 26R-320 and the washer 26R-310 from the lavatory structure.

(c) Remove the screws 26R-120, 26R-340, the washers 26R-130 and the cable ties 26R-190 from the lavatory structure.

(d) Remove the ami cabin attendant seat cable 26R-350, the connector backshell 26R-390 and the plug connectors 26R-380, 26R-400 from the lavatory structure.

(e) Disconnect the cables, the applicable bonding straps 26R-250, 26R-260, 26R-270, 26R-280, 26R-290 and the cable harness assembly 26R-010 from the electrical components.

(f) See Disassembly of the Cable Harness Assembly for the disassembly procedure of the cable harness assembly 26R-010.

(g) Remove the screws 26R-040, the nuts 26R-050, the smoke detector 26R-020 and the smoke detector sealing 26R-030 from the lavatory structure.

NOTE: For further instructions, see CMMV 26-16-16_F4885 (smoke detector).

(h) Remove the screws 26R-120, the washers 26R-130 and the brackets 26R-110 from the lavatory structure.

(i) Remove the call light 26R-100 from the lavatory structure.

NOTE: For further instructions, see CMMV 33-20-01_DD704 (call light).

(j) Remove the light assembly 26R-140 from the lavatory structure.

NOTE: For further instructions, see CMMV 33-27-01_DD704 (light assembly).

(k) Remove the loudspeaker 26R-220 from the lavatory structure.

NOTE: For further instructions, see CMMV 23-31-12_D7320 (loudspeaker).

(l) Remove the screws 26R-460, the spacers 26R-470 and the mini inverter 26R-450 from the lavatory structure.

NOTE: For further instructions, see CMMV 25-44-01_D2361 (mini inverter).

(m) Remove the screws 26R-240 and the microswitch 26R-230.

SUB TASK 25-41-51-040-092-H01
D2549030412200 D2549030704200

7. Disassembly of the Electrical System (26R-1)

NOTE: **See TABLE 3651 for the references for the replacement procedures of permanent installed parts.**

More data for bonded parts are given in column SEE REPAIR TASK. Use the data for the selection of the related repair solution.

IPL FIG. ITEM	COMPONENT PART NAME	IPL FIG. ITEM	REPLACEMENT PART NAME	SEE REPAIR TASK
26R-001 26R-480 26R-490 26R-510	Electrical System 2065VU Switch Panel Switch Housing Assembly Foil Assembly	26R-520 26R-530	Foil Adhesive Film	Replacement of the Bonded Parts self adhesive

Table 3651
Reference list for the replacement of permanent installed parts

NOTE: **It is recommended that you only remove the components if they are damaged.**

(a) Remove the screw 26R-300, the washer 26R-310 and the clamp 26R-330 from the lavatory structure.

(b) Remove the nut 26R-320 and the washer 26R-310 from the lavatory structure.

(c) Remove the screws 26R-120, 26R-340, the washers 26R-130 and the cable ties 26R-190 from the lavatory structure.

(d) Remove the ami cabin attendant seat cable 26R-350, the connector backshell 26R-390 and the plug connectors 26R-380, 26R-400 from the lavatory structure.

(e) Disconnect the cables, the applicable bonding straps 26R-250, 26R-260, 26R-270, 26R-280, 26R-290, 26R-295 and the cable harness assembly 26R-010 from the electrical components.

(f) See Disassembly of the Cable Harness Assembly for the disassembly procedure of the cable harness assembly 26R-010.

(g) Remove the screws 26R-040, the nuts 26R-050, the smoke detector 26R-020 and the smoke detector sealing 26R-030 from the lavatory structure.

NOTE: For further instructions, see CMMV 26-16-16_F4885 (smoke detector).

(h) Remove the screws 26R-120, the washers 26R-130 and the brackets 26R-110 from the lavatory structure.

(i) Remove the call light 26R-100 from the lavatory structure.

NOTE: For further instructions, see CMMV 33-22-01_DD704 (call light).

(j) Remove the light assembly 26R-140 from the lavatory structure.

NOTE: For further instructions, see CMMV 33-27-01_DD704 (light assembly).

(k) Remove the loudspeaker 26R-220 from the lavatory structure.

NOTE: For further instructions, see CMMV 23-31-12_D7320 (loudspeaker).

(l) Remove the screws 26R-460, the spacers 26R-470 and the mini inverter 26R-450 from the lavatory structure.

NOTE: For further instructions, see CMMV 25-44-01_D2361 (mini inverter).

(m) Remove and disassemble the 2065VU switch panel 26R-480 as follows:

1 Remove the plugs 26R-590 from the printed circuit board PCB 26R-540.

2 Remove and disassemble the switch housing assembly 26R-490 as follows:

a Remove the screws 26R-550, the spring washers 26R-560 and the switch housing 26R-500 from the printed circuit board PCB 26R-540.

3 Remove the protective lens 26R-580 from the switch button switch 26R-570.

4 Remove the switch button switch 26R-570 from the printed circuit board PCB 26R-540.

(n) Remove the screws 26R-240 and the microswitch 26R-230.

SUB TASK 25-41-51-040-092-J01
D2549010401600 D2549020700200

8. Disassembly of the Electrical System (26R-1)

NOTE: **It is recommended that you only remove the components if they are damaged.**

(a) Remove the screw 26R-300, the washer 26R-310 and the clamp 26R-330 from the lavatory structure.

(b) Remove the nut 26R-320 and the washer 26R-310 from the lavatory structure.

(c) Remove the screws 26R-120, 26R-340, the washers 26R-130 and the cable ties 26R-190 from the lavatory structure.

(d) Remove the ami cabin attendant seat cable 26R-350, the connector backshell 26R-390 and the plug connectors 26R-380, 26R-400 from the lavatory structure.

(e) Disconnect the cables, the applicable bonding straps 26R-250, 26R-260, 26R-270, 26R-280, 26R-290, 26R-295 and the cable harness assembly 26R-010 from the electrical components.

(f) See Disassembly of the Cable Harness Assembly for the disassembly procedure of the cable harness assembly 26R-010.

(g) Remove the screws 26R-040, the nuts 26R-050, the smoke detector 26R-020 and the smoke detector sealing 26R-030 from the lavatory structure.

NOTE: **For further instructions, see CMMV 26-16-16_F4885 (smoke detector).**

(h) Remove the screws 26R-120, the washers 26R-130 and the brackets 26R-110 from the lavatory structure.

(i) Remove the call light 26R-100 from the lavatory structure.

NOTE: **For further instructions, see CMMV 33-22-01_DD704 (call light).**

(j) Remove the light assembly 26R-140 from the lavatory structure.

NOTE: **For further instructions, see CMMV 33-27-01_DD704 (light assembly).**

(k) Remove the loudspeaker 26R-220 from the lavatory structure.

NOTE: For further instructions, see CMMV 23-31-12_D7320 (loudspeaker).

(l) Remove the screws 26R-240, 26R-307, the washer 26R-315 and the micro-switch 26R-230.

SUB TASK 25-41-51-040-092-K01
D2549010402400 D2549010403400 D2549010406400

9. Disassembly of the Electrical System (26R-1)

NOTE: It is recommended that you only remove the components if they are damaged.

(a) Remove the screw 26R-300, the washer 26R-310 and the clamp 26R-330 from the lavatory structure.

(b) Remove the nut 26R-320 and the washer 26R-310 from the lavatory structure.

(c) Remove the screws 26R-120, 26R-340, the washers 26R-130 and the cable ties 26R-190 from the lavatory structure.

(d) Remove the ami cabin attendant seat cable 26R-350, the connector backshell 26R-390 and the plug connectors 26R-380, 26R-400 from the lavatory structure.

(e) Disconnect the cables, the applicable bonding straps 26R-250, 26R-260, 26R-270, 26R-280, 26R-290 and the cable harness assembly 26R-010 from the electrical components.

(f) See Disassembly of the Cable Harness Assembly for the disassembly procedure of the cable harness assembly 26R-010.

(g) Remove the screws 26R-040, the nuts 26R-050, the smoke detector 26R-020 and the smoke detector sealing 26R-030 from the lavatory structure.

NOTE: For further instructions, see CMMV 26-16-16_F4885 (smoke detector).

(h) Remove the screws 26R-120, the washers 26R-130 and the brackets 26R-111, 26R-115 from the lavatory structure.

(i) Remove the call light 26R-100 from the lavatory structure.

NOTE: For further instructions, see CMMV 33-22-01_DD704 (call light).

(j) Remove the light assembly 26R-140 from the lavatory structure.

NOTE: For further instructions, see CMMV 33-27-01_DD704 (light assembly).

(k) Remove the loudspeaker 26R-220 from the lavatory structure.

NOTE: For further instructions, see CMMV 23-31-12_D7320 (loudspeaker).

(l) Remove the screws 26R-460, the spacers 26R-470 and the mini inverter 26R-450 from the lavatory structure.

NOTE: For further instructions, see CMMV 25-44-01_D2361 (mini inverter).

(m) Remove the screws 26R-240 and the microswitch 26R-230.

SUB TASK 25-41-51-040-092-L01
D2549010613600 D2549020300600 D2549020301800 D2549020401000 D2549020409800 D2549020410600

10. Disassembly of the Electrical System (26R-1)

NOTE: It is recommended that you only remove the components if they are damaged.

(a) Remove the screw 26R-300, the washer 26R-310 and the clamp 26R-330 from the lavatory structure.

(b) Remove the nut 26R-320 and the washer 26R-310 from the lavatory structure.

(c) Remove the screws 26R-120, 26R-340, the washers 26R-130 and the cable ties 26R-190 from the lavatory structure.

(d) Remove the ami cabin attendant seat cable 26R-350, the connector backshell 26R-390 and the plug connectors 26R-380, 26R-400 from the lavatory structure.

(e) Disconnect the cables, the applicable bonding straps 26R-250, 26R-260, 26R-270, 26R-280, 26R-290, 26R-295 and the cable harness assembly 26R-010 from the electrical components.

(f) See Disassembly of the Cable Harness Assembly for the disassembly procedure of the cable harness assembly 26R-010.

(g) Remove the screws 26R-040, the nuts 26R-050, the smoke detector 26R-020 and the smoke detector sealing 26R-030 from the lavatory structure.

NOTE: For further instructions, see CMMV 26-16-16_F4885 (smoke detector).

(h) Remove the screws 26R-120, the washers 26R-130 and the brackets 26R-110 from the lavatory structure.

(i) Remove the call light 26R-100 from the lavatory structure.

NOTE: For further instructions, see CMMV 33-22-01_DD704 (call light).

(j) Remove the light assembly 26R-140 from the lavatory structure.

NOTE: For further instructions, see CMMV 33-27-01_DD704 (light assembly).

(k) Remove the loudspeaker 26R-220 from the lavatory structure.

NOTE: For further instructions, see CMMV 23-31-12_D7320 (loudspeaker).

(l) Remove the screws 26R-460, the spacers 26R-470 and the mini inverter 26R-450 from the lavatory structure.

NOTE: For further instructions, see CMMV 25-44-01_D2361 (mini inverter).

(m) Remove the screws 26R-240 and the microswitch 26R-230.

SUB TASK 25-41-51-040-092-M01
D2549010510600 D2549030413400 D2549030704400

11. Disassembly of the Electrical System (26R-1)

NOTE: **See TABLE 3652 for the references for the replacement procedures of permanent installed parts.**

More data for bonded parts are given in column SEE REPAIR TASK. Use the data for the selection of the related repair solution.

IPL FIG. ITEM	COMPONENT PART NAME	IPL FIG. ITEM	REPLACEMENT PART NAME	SEE REPAIR TASK
26R-001 26R-480 26R-490 26R-510	Electrical System 2065VU Switch Panel Switch Housing Assembly Foil Assembly	26R-520 26R-530	Foil Adhesive Film	Replacement of the Bonded Parts self adhesive

Table 3652
Reference list for the replacement of permanent installed parts

NOTE: **It is recommended that you only remove the components if they are damaged.**

(a) Remove the screw 26R-300, the washer 26R-310 and the clamp 26R-330 from the lavatory structure.

(b) Remove the nut 26R-320 and the washer 26R-310 from the lavatory structure.

(c) Remove the screws 26R-120, 26R-340, the washers 26R-130 and the cable ties 26R-190 from the lavatory structure.

(d) Remove the screws 26R-325, the washers 26R-335 and the bonding straps 26R-275, 26R-295 from the electrical components.

(e) Remove the ami cabin attendant seat cable 26R-350, the connector backshell 26R-390 and the plug connectors 26R-380, 26R-400 from the lavatory structure.

(f) Disconnect the cables, the applicable bonding straps 26R-250, 26R-255, 26R-265, 26R-280, 26R-285, 26R-290 and the cable harness assembly 26R-010 from the electrical components.

(g) See Disassembly of the Cable Harness Assembly for the disassembly procedure of the cable harness assembly 26R-010.

(h) Remove the screws 26R-040, the nuts 26R-050, the smoke detector 26R-020 and the smoke detector sealing 26R-030 from the lavatory structure.

NOTE: For further instructions, see CMMV 26-16-16_F4885 (smoke detector).

(i) Remove the screws 26R-120, the washers 26R-130 and the brackets 26R-110 from the lavatory structure.

(j) Remove the call light 26R-100 from the lavatory structure.

NOTE: For further instructions, see CMMV 33-22-01_DD704 (call light).

(k) Remove the light assembly 26R-140 from the lavatory structure.

NOTE: For further instructions, see CMMV 33-27-01_DD704 (light assembly).

(l) Remove the loudspeaker 26R-220 from the lavatory structure.

NOTE: For further instructions, see CMMV 23-31-12_D7320 (loudspeaker).

(m) Remove the screws 26R-460, the spacers 26R-470 and the mini inverter 26R-450 from the lavatory structure.

NOTE: For further instructions, see CMMV 25-44-01_D2361 (mini inverter).

(n) Remove and disassemble the 2065VU switch panel 26R-480 as follows:

1 Remove the plugs 26R-590 from the printed circuit board PCB 26R-540.

2 Remove and disassemble the switch housing assembly 26R-490 as follows:

a Remove the screws 26R-550, the spring washers 26R-560 and the switch housing 26R-500 from the printed circuit board PCB 26R-540.

3 Remove the protective lens 26R-580 from the switch button switch 26R-570.

4 Remove the switch button switch 26R-570 from the printed circuit board PCB 26R-540.

(o) Remove the screws 26R-240 and the microswitch 26R-230.

TASK 25-41-51-000-821-T01
D2549030409600 D2549030410800

216. Disassembly of the Electrical System

A. General

A complete disassembly of the component is not necessary and not recommended.

Do not disassemble the component more than it is necessary for:

- Cleaning
- Visual Inspection
- Replacement of defective parts.

B. Job Set-up Information

(1) Not applicable

C. Procedure

WARNING: BE CAREFUL WHEN YOU USE SOLVENTS/CLEANING AGENTS, SEALANTS AND OTHER MATERIALS. OBEY THE MATERIAL MANUFACTURER'S INSTRUCTIONS AND THE LOCAL REGULATIONS. MAKE SURE THAT THERE IS A GOOD FLOW OF AIR THROUGH THE WORK AREA. DO NOT BREATHE THE FUMES. DO NOT SMOKE. DO NOT USE THESE MATERIALS NEAR A FLAME, SPARKS OR SOURCES OF HEAT. USE PROTECTIVE CLOTHING, GOGGLES AND GLOVES. IF YOU GET ONE OF THESE MATERIALS ON YOUR SKIN OR IN YOUR EYES, FLUSH IT AWAY WITH A FLOW OF CLEAN WATER. IF YOU GET ONE OF THESE MATERIALS IN YOUR MOUTH, GET IMMEDIATE MEDICAL AID. IN GENERAL, THESE MATERIALS ARE POISONOUS, FLAMMABLE AND SKIN IRRITANTS.

CAUTION: DO ALL THE WORK ON A CLEAN, SOFT SURFACE TO PREVENT DAMAGE TO THE COMPONENTS.

SUB TASK 25-41-51-040-093-A01

1. Disassembly of the Electrical System (26S-1)

NOTE: It is recommended that you only remove the components if they are damaged.

(a) Remove the screw 26S-320, the washer 26S-330 and the clamp 26S-350 from the lavatory structure.

(b) Remove the nut 26S-340 and the washer 26S-330 from the lavatory structure.

(c) Remove the screws 26S-130, the washers 26S-140, the cable ties 26S-200 and the bracket 26S-210 from the lavatory structure.

(d) Remove the screws 26S-130, the washers 26S-140 and the brackets 26S-120 from the lavatory structure.

(e) Remove the ami cabin attendant seat cable 26S-390, the connector backshell 26S-430 and the plug connectors 26S-420, 26S-440 from the lavatory structure.

(f) Disconnect the cables, the applicable bonding straps 26S-270, 26S-280, 26S-290, 26S-300, 26S-310 and the cable harness assembly 26S-010 from the electrical components.

(g) See Disassembly of the Cable Harness Assembly for the disassembly procedure of the cable harness assembly 26S-010.

(h) Remove the screws 26S-040, the nuts 26S-050, the smoke detector 26S-020 and the smoke detector sealing 26S-030 from the lavatory structure.

NOTE: For further instructions, see CMMV 26-18-18_F4885 (smoke detector).

(i) Remove the call light 26S-110 from the lavatory structure.

NOTE: For further instructions, see CMMV 33-22-01_DD704 (call light).

(j) Remove the light assembly 26S-150 from the lavatory structure.

NOTE: For further instructions, see CMMV 33-27-01_DD704 (light assembly).

(k) Remove the loudspeaker 26S-240 from the lavatory structure.

NOTE: For further instructions, see CMMV 23-31-12_D7320 (loudspeaker).

(l) Remove the screws 26S-380, the spacers 26S-370 and the mini inverter 26S-360 from the lavatory structure.

NOTE: For further instructions, see CMMV 25-44-01_D2361 (mini inverter).

(m) Remove the screws 26S-260 and the microswitch 26S-250.

TASK 25-41-51-000-821-U01
D2549010400000

217. Disassembly of the Electrical System

A. General

A complete disassembly of the component is not necessary and not recommended.

Do not disassemble the component more than it is necessary for:

- Cleaning
- Visual Inspection
- Replacement of defective parts.

B. Job Set-up Information

(1) Not applicable

C. Procedure

WARNING: BE CAREFUL WHEN YOU USE SOLVENTS/CLEANING AGENTS, SEALANTS AND OTHER MATERIALS. OBEY THE MATERIAL MANUFACTURER'S INSTRUCTIONS AND THE LOCAL REGULATIONS. MAKE SURE THAT THERE IS A GOOD FLOW OF AIR THROUGH THE WORK AREA. DO NOT BREATHE THE FUMES. DO NOT SMOKE. DO NOT USE THESE MATERIALS NEAR A FLAME, SPARKS OR SOURCES OF HEAT. USE PROTECTIVE CLOTHING, GOGGLES AND GLOVES. IF YOU GET ONE OF THESE MATERIALS ON YOUR SKIN OR IN YOUR EYES, FLUSH IT AWAY WITH A FLOW OF CLEAN WATER. IF YOU GET ONE OF THESE MATERIALS IN YOUR MOUTH, GET IMMEDIATE MEDICAL AID. IN GENERAL, THESE MATERIALS ARE POISONOUS, FLAMMABLE AND SKIN IRRITANTS.

CAUTION: DO ALL THE WORK ON A CLEAN, SOFT SURFACE TO PREVENT DAMAGE TO THE COMPONENTS.

SUB TASK 25-41-51-040-094-A01
1. Disassembly of the Electrical System (26T-1)

NOTE: **See TABLE 3653 for the references for the replacement procedures of permanent installed parts.**

More data for bonded parts are given in column SEE REPAIR TASK. Use the data for the selection of the related repair solution.

IPL FIG. ITEM	COMPONENT PART NAME	IPL FIG. ITEM	REPLACEMENT PART NAME	SEE REPAIR TASK
26T-001 26T-470 26T-480 26T-500	Electrical System 2065VU Switch Panel Switch Housing Assembly Foil Assembly	26T-510 26T-520	Foil Adhesive Film	TBD self adhesive

Table 3653
Reference list for the replacement of permanent installed parts

NOTE: **It is recommended that you only remove the components if they are damaged.**

(a) Remove the screw 26T-280, the washer 26T-290 and the clamp 26T-310 from the lavatory structure.

(b) Remove the nut 26T-300 and the washer 26T-290 from the lavatory structure.

(c) Remove the screws 26T-120, 26T-330, the washers 26T-030, 26T-320 and the nuts 26T-340 from the lavatory structure.

(d) Remove the ami cabin attendant seat cable 26T-350, the connector backshell 26T-390 and the plug connectors 26T-380, 26T-400 from the lavatory structure.

(e) Disconnect the cables, the applicable bonding straps 26T-230, 26T-240, 26T-250, 26T-260, 26T-270 and the cable harness assembly 26T-010 from the electrical components.

(f) See Disassembly of the Cable Harness Assembly for the disassembly procedure of the cable harness assembly 26T-010.

(g) Remove the screws 26T-040, the washers 26T-030, the nuts 26T-460, the smoke detector 26T-020 and the smoke detector sealing 26T-050 from the lavatory structure.

NOTE: For further instructions, see CMMV 26-16-16_F4885 (smoke detector).

(h) Remove the screws 26T-120, the washers 26T-030 and the brackets 26T-110 from the lavatory structure.

(i) Remove the call light 26T-100 from the lavatory structure.

NOTE: For further instructions, see CMMV 33-22-01_DD704 (call light).

(j) Remove the light assembly 26T-130 from the lavatory structure.

NOTE: For further instructions, see CMMV 33-27-01_DD704 (light assembly).

(k) Remove the loudspeaker 26T-180 from the lavatory structure.

NOTE: For further instructions, see CMMV 23-31-12_D7320 (loudspeaker).

(l) Remove the screws 26T-450, the spacers 26T-440 and the mini inverter 26T-430 from the lavatory structure.

NOTE: For further instructions, see CMMV 25-44-01_D2361 (mini inverter).

(m) Remove and disassemble the 2065VU switch panel 26T-470 as follows:

1 Remove the plugs 26T-580 from the printed circuit board PCB 26T-530.

2 Remove and disassemble the switch housing assembly 26T-480 as follows:
a Remove the screws 26T-540, the spring washers 26T-550 and the switch housing 26T-490 from the printed circuit board PCB 26T-530.

3 Remove the protective lens 26T-570 from the switch button switch 26T-560.

4 Remove the switch button switch 26T-560 from the printed circuit board PCB 26T-530.

(n) Remove the screws 26T-200 and the microswitch 26T-190.

TASK 25-41-51-000-821-V01

D2549010405200 D2549010405600 D2549020301600 D2549020411200 D2549020412000
D2549020412200 D2549020412400 D2549020413200 D2549020413600 D2549020413800
D2549020414000 D2549020414600 D2549020414800 D2549020708200 D2549030413000
D2549030414000 D2549030414200 D2549030414600 D2549030700000 D2549030700600
D2549030700800 D2549030701400 D2549030701600 D2549030701800 D2549030702000
D2549030702200 D2549030702400 D2549030702800 D2549030703000 D2549030703200
D2549030703800 D2549030704000 D2549030704600 D2549030704800 D2549030705600
D2549040501200 D2549040501400 D2549040501600 D2549040501800 D2549040502000
R225401136-008 R225401136-014 R225401611-020 R225401671-000 R225401671-002
R225401673-006 R225401691-000 R225401691-002 R225401697-000 R225401697-002
R225401803-000 R225401803-002 R225401808-000 R225401814-000

218. Disassembly of the Electrical System

A. General

A complete disassembly of the component is not necessary and not recommended.

Do not disassemble the component more than it is necessary for:

- Cleaning
- Visual Inspection
- Replacement of defective parts.

B. Job Set-up Information

(1) Not applicable

C. Procedure

WARNING: **BE CAREFUL WHEN YOU USE SOLVENTS/CLEANING AGENTS, SEALANTS AND OTHER MATERIALS. OBEY THE MATERIAL MANUFACTURER'S INSTRUCTIONS AND THE LOCAL REGULATIONS. MAKE SURE THAT THERE IS A GOOD FLOW OF AIR THROUGH THE WORK AREA. DO NOT BREATHE THE FUMES. DO NOT SMOKE. DO NOT USE THESE MATERIALS NEAR A FLAME, SPARKS OR SOURCES OF HEAT. USE PROTECTIVE CLOTHING, GOGGLES AND GLOVES. IF YOU GET ONE OF THESE MATERIALS ON YOUR SKIN OR IN YOUR EYES, FLUSH IT AWAY WITH A FLOW OF CLEAN WATER. IF YOU GET ONE OF THESE MATERIALS IN YOUR MOUTH, GET IMMEDIATE MEDICAL AID. IN GENERAL, THESE MATERIALS ARE POISONOUS, FLAMMABLE AND SKIN IRRITANTS.**

CAUTION: **DO ALL THE WORK ON A CLEAN, SOFT SURFACE TO PREVENT DAMAGE TO THE COMPONENTS.**

SUB TASK 25-41-51-040-095-A01

D2549010405200 D2549010405600 D2549020301600 D2549020411200 D2549020412000 D2549020412200 D2549020412400 D2549020413200 D2549020413600 D2549020413800 D2549020414000 D2549020414600 D2549020414800 D2549020708200 D2549030413000 D2549030414000 D2549030414200 D2549030414600 D2549030700000 D2549030700800 D2549030701400 D2549030701600 D2549030701800 D2549030702000 D2549030702200 D2549030702400 D2549030702800 D2549030703000 D2549030703800 D2549030704000 D2549030704600 D2549030704800 D2549030705600 D2549040501200 D2549040501400 D2549040501600 D2549040501800 D2549040502000 R225401136-008 R225401136-014 R225401611-020 R225401671-000 R225401671-002 R225401673-006 R225401691-000 R225401691-002 R225401697-000 R225401697-002 R225401803-000 R225401803-002 R225401808-000 R225401814-000

1. Disassembly of the Electrical System (26U-1)

NOTE: **It is recommended that you only remove the components if they are damaged.**

(a) Remove the screw 26U-320, the washer 26U-330 and the clamp 26U-350 from the lavatory structure.

(b) Remove the nut 26U-340 and the washer 26U-330 from the lavatory structure.

(c) Remove the screws 26U-130, the washers 26U-140, the cable ties 26U-200 and the brackets 26U-210 from the lavatory structure.

(d) Remove the screws 26U-130, the washers 26U-140 and the bracket 26U-120 from the lavatory structure.

(e) Remove the ami cabin attendant seat cable 26U-390, the connector backshell 26U-430 and the plug connectors 26U-420, 26U-440 from the lavatory structure.

(f) Disconnect the cables, the applicable bonding straps 26U-270, 26U-280, 26U-290, 26U-300, 26U-310 and the cable harness assembly 26U-010 from the electrical components.

(g) See Disassembly of the Cable Harness Assembly for the disassembly procedure of the cable harness assembly 26U-010.

(h) Remove the screws 26U-040, the nuts 26U-050, the smoke detector 26U-020 and the smoke detector sealing 26U-030 from the lavatory structure.

NOTE: For further instructions, see CMMV 26-18-18_F4885 (smoke detector).

(i) Remove the call light 26U-110 from the lavatory structure.

NOTE: For further instructions, see CMMV 33-22-01_DD704 (call light).

(j) Remove the light assembly 26U-150 from the lavatory structure.

NOTE: For further instructions, see CMMV 33-27-01_DD704 (light assembly).

(k) Remove the loudspeaker 26U-240 from the lavatory structure.

NOTE: For further instructions, see CMMV 23-31-12_D7320 (loudspeaker).

(l) Remove the screws 26U-380, the spacers 26U-370 and the mini inverter 26U-360 from the lavatory structure.

NOTE: For further instructions, see CMMV 25-44-01_D2361 (mini inverter).

(m) Remove the screws 26U-260 and the microswitch 26U-250.

SUB TASK 25-41-51-040-095-B01
D2549030703200

2. Disassembly of the Electrical System (26U-1)

NOTE: **See TABLE 3654 for the references for the replacement procedures of permanent installed parts.**

More data for bonded parts are given in column SEE REPAIR TASK. Use the data for the selection of the related repair solution.

IPL FIG. ITEM	COMPONENT PART NAME	IPL FIG. ITEM	REPLACEMENT PART NAME	SEE REPAIR TASK
26U-001 26U-470 26U-480 26U-500	Electrical System 2065VU Switch Panel Switch Housing Assembly Foil Assembly	26U-510 26U-520	Foil Adhesive Film	TBD self adhesive

Table 3654
Reference list for the replacement of permanent installed parts

NOTE: **It is recommended that you only remove the components if they are damaged.**

(a) Remove the screw 26U-320, the washer 26U-330 and the clamp 26U-350 from the lavatory structure.

(b) Remove the nut 26U-340 and the washer 26U-330 from the lavatory structure.

(c) Remove the screws 26U-130, the washers 26U-140, the cable ties 26U-200 and the brackets 26U-210 from the lavatory structure.

(d) Remove the screws 26U-130, the washers 26U-140 and the bracket 26U-120 from the lavatory structure.

(e) Remove the ami cabin attendant seat cable 26U-390, the connector backshell 26U-430 and the plug connectors 26U-420, 26U-440 from the lavatory structure.

(f) Disconnect the cables, the applicable bonding straps 26U-270, 26U-280, 26U-290, 26U-300, 26U-310 and the cable harness assembly 26U-010 from the electrical components.

(g) See Disassembly of the Cable Harness Assembly for the disassembly procedure of the cable harness assembly 26U-010.

(h) Remove the screws 26U-040, the nuts 26U-050, the smoke detector 26U-020 and the smoke detector sealing 26U-030 from the lavatory structure.

NOTE: For further instructions, see CMMV 26-18-18_F4885 (smoke detector).

(i) Remove the call light 26U-110 from the lavatory structure.

NOTE: For further instructions, see CMMV 33-22-01_DD704 (call light).

(j) Remove the light assembly 26U-150 from the lavatory structure.

NOTE: For further instructions, see CMMV 33-27-01_DD704 (light assembly).

(k) Remove the loudspeaker 26U-240 from the lavatory structure.

NOTE: For further instructions, see CMMV 23-31-12_D7320 (loudspeaker).

(l) Remove the screws 26U-380, the spacers 26U-370 and the mini inverter 26U-360 from the lavatory structure.

NOTE: For further instructions, see CMMV 25-44-01_D2361 (mini inverter).

(m) Remove and disassemble the 2065VU switch panel 26U-470 as follows:

1 Remove the plugs 26U-580 from the printed circuit board PCB 26U-530.

2 Remove and disassemble the switch housing assembly 26U-480 as follows:
a Remove the screws 26U-540, the spring washers 26U-550 and the switch housing 26U-490 from the printed circuit board PCB 26U-530.

3 Remove the protective lens 26U-570 from the switch button switch 26U-560.

4 Remove the switch button switch 26U-560 from the printed circuit board PCB 26U-530.

(n) Remove the screws 26U-260 and the microswitch 26U-250.

SUB TASK 25-41-51-040-095-C01
D2549030700600

3. Disassembly of the Electrical System (26U-1)

NOTE: **It is recommended that you only remove the components if they are damaged.**

(a) Remove the screw 26U-320, the washer 26U-330 and the clamp 26U-350 from the lavatory structure.

(b) Remove the nut 26U-340 and the washer 26U-330 from the lavatory structure.

(c) Remove the screws 26U-130, the washers 26U-140, the cable ties 26U-200 and the brackets 26U-210 from the lavatory structure.

(d) Remove the screws 26U-130, the washers 26U-140 and the bracket 26U-120 from the lavatory structure.

(e) Remove the screws 26U-325, the washers 26U-335 and the bonding straps 26U-315 from the electrical components.

(f) Remove the ami cabin attendant seat cable 26U-390, the connector backshell 26U-430 and the plug connectors 26U-420, 26U-440 from the lavatory structure.

(g) Disconnect the cables, the applicable bonding straps 26U-270, 26U-280, 26U-290, 26U-300, 26U-310 and the cable harness assembly 26U-010 from the electrical components.

(h) See Disassembly of the Cable Harness Assembly for the disassembly procedure of the cable harness assembly 26U-010.

(i) Remove the screws 26U-040, the nuts 26U-050, the smoke detector 26U-020 and the smoke detector sealing 26U-030 from the lavatory structure.

NOTE: **For further instructions, see CMMV 26-18-18_F4885 (smoke detector).**

(j) Remove the call light 26U-110 from the lavatory structure.

NOTE: **For further instructions, see CMMV 33-22-01_DD704 (call light).**

(k) Remove the light assembly 26U-150 from the lavatory structure.

NOTE: **For further instructions, see CMMV 33-27-01_DD704 (light assembly).**

(l) Remove the loudspeaker 26U-240 from the lavatory structure.

NOTE: **For further instructions, see CMMV 23-31-12_D7320 (loudspeaker).**

(m) Remove the screws 26U-380, the spacers 26U-370 and the mini inverter 26U-360 from the lavatory structure.

NOTE: For further instructions, see CMMV 25-44-01_D2361 (mini inverter).

(n) Remove the screws 26U-260 and the microswitch 26U-250.

TASK 25-41-51-000-821-W01
D2549030610200 D2549030701200

219. Disassembly of the Electrical System

A. General

A complete disassembly of the component is not necessary and not recommended.

Do not disassemble the component more than it is necessary for:

- Cleaning
- Visual Inspection
- Replacement of defective parts.

B. Job Set-up Information
(1) Consumable Materials

REFERENCE	DESIGNATION
08-026	Adhesive/Sealant one Part, RTV Silicone Rubber

Table 3655
Consumable Materials

C. Procedure

WARNING: **BE CAREFUL WHEN YOU USE SOLVENTS/CLEANING AGENTS, SEALANTS AND OTHER MATERIALS. OBEY THE MATERIAL MANUFACTURER'S INSTRUCTIONS AND THE LOCAL REGULATIONS. MAKE SURE THAT THERE IS A GOOD FLOW OF AIR THROUGH THE WORK AREA. DO NOT BREATHE THE FUMES. DO NOT SMOKE. DO NOT USE THESE MATERIALS NEAR A FLAME, SPARKS OR SOURCES OF HEAT. USE PROTECTIVE CLOTHING, GOGGLES AND GLOVES. IF YOU GET ONE OF THESE MATERIALS ON YOUR SKIN OR IN YOUR EYES, FLUSH IT AWAY WITH A FLOW OF CLEAN WATER. IF YOU GET ONE OF THESE MATERIALS IN YOUR MOUTH, GET IMMEDIATE MEDICAL AID. IN GENERAL, THESE MATERIALS ARE POISONOUS, FLAMMABLE AND SKIN IRRITANTS.**

CAUTION: **DO ALL THE WORK ON A CLEAN, SOFT SURFACE TO PREVENT DAMAGE TO THE COMPONENTS.**

SUB TASK 25-41-51-040-096-A01

1. Disassembly of the Electrical System (26V-1)

NOTE: **See TABLE 3656 for the references for the replacement procedures of permanent installed parts.**

More data for bonded parts are given in column SEE REPAIR TASK. Use the data for the selection of the related repair solution.

IPL FIG. ITEM	COMPONENT PART NAME	IPL FIG. ITEM	REPLACEMENT PART NAME	SEE REPAIR TASK
26V-001	Electrical System	26V-120	Sealing Profile	Replacement of the Bonded Parts Material No. 08-026 Adhesive/Sealant one Part, RTV Silicone Rubber

Table 3656
Reference list for the replacement of permanent installed parts

NOTE: **It is recommended that you only remove the components if they are damaged.**

(a) Remove the screw 26V-520, the washer 26V-530 and the clamp 26V-470 from the lavatory structure.

(b) Remove the nut 26V-200 and the washer 26V-210 from the lavatory structure.

(c) Remove the nut 26V-540 and the washer 26V-530 from the lavatory structure.

(d) Remove the screw 26V-560 and the washer 26V-210 from the lavatory structure.

(e) Remove the screws 26V-160 and the washers 26V-210 from the lavatory structure.

(f) Remove the screw 26V-550 and the washer 26V-210 from the lavatory structure.

(g) Remove the ami cabin attendant seat cable 26V-220 as follows:

1 Remove the plug connectors 26V-230, 26V-250, the connector backshell 26V-240, the cable bracket 26V-260, the protective cap 26V-270, the plugs 26V-360, the labels 26V-400 and the ami cabin attendant seat cable 26V-220 from the lavatory structure.

(h) Disconnect the cables, the applicable bonding straps 26V-420, 26V-430, 26V-440, 26V-450, 26V-460, 26V-480, 26V-490, 26V-500, 26V-510 and the cable harness assembly 26V-010 from the electrical components.

(i) See Disassembly of the Cable Harness Assembly for the disassembly procedure of the cable harness assembly 26V-010.

(j) Remove the bolts 26V-190, the washers 26V-210, the nuts 26V-200, the smoke detector 26V-020 and the smoke detector sealing 26V-030 from the lavatory structure.

NOTE: For further instructions, see CMMV 26-18-18_F4885 (smoke detector).

(k) Remove the screws 26V-160, the washers 26V-210 and the bracket 26V-100 from the lavatory structure.

(l) Remove the call light 26V-060 from the lavatory structure.

NOTE: For further instructions, see CMMV 33-22-01_DD704 (call light).

(m) Remove the light assembly 26V-070 from the lavatory structure.

NOTE: For further instructions, see CMMV 33-27-01_DD704 (light assembly).

(n) Remove the screws 26V-160 and the washers 26V-210 from the lavatory structure.

(o) Remove the loudspeaker 26V-090 from the lavatory structure.

NOTE: For further instructions, see CMMV 23-31-12_D7320 (loudspeaker).

(p) Remove the screws 26V-180, the spacers 26V-150 and the mini inverter 26V-110 from the lavatory structure.

NOTE: For further instructions, see CMMV 25-44-01_D2361 (mini inverter).

(q) Remove the screws 26V-170 and the microswitch 26V-080.

TASK 25-41-51-000-822-A01

D2547161903000 D2549010500000 D2549010500400 D2549010500600 D2549010500800
D2549010501000 D2549010501200 D2549010501400 D2549010501600 D2549010501800
D2549010502000 D2549010502200 D2549010502400 D2549010502600 D2549010502800
D2549010503200 D2549010503400 D2549010503600 D2549010503800 D2549010504200
D2549010504400 D2549010504600 D2549010504800 D2549010505000 D2549010505200
D2549010505400 D2549010505600 D2549010505800 D2549010506000 D2549010506200
D2549010506400 D2549010506800 D2549010507000 D2549010507200 D2549010507400
D2549010507600 D2549010507800 D2549010508000 D2549010508200 D2549010508400
D2549010508600 D2549010508800 D2549010509000 D2549010509200 D2549010511200
D2549020500000 D2549020500200 D2549020500400 D2549020500600 D2549020500800
D2549020501000 D2549020501200 D2549020501400 D2549020501600 D2549020501800
D2549020502000 D2549020502400 D2549020502600 D2549020502800 D2549020503000
D2549020503200 D2549020503400 D2549020503600 D2549020503800 D2549020504000
D2549020504200 D2549020504400 D2549020504600 D2549020504800 D2549020505000
D2549020505200 D2549020505400 D2549020505800 D2549020506000 D2549020600000
D2549020600200 D2549020600400 D2549020600800 D2549020601000 D2549020601200
D2549020601400 D2549020601600 D2549020601800 D2549020602000 D2549020602400
D2549020602600 D2549020602800 D2549020603000 D2549020603200 D2549020603400
D2549020603600 D2549020603800 D2549020604000 D2549020606400 D2549020606600
D2549020607200 D2549030500400 D2549030500600 D2549030500800 D2549030501000
D2549030501200 D2549030501400 D2549030501600 D2549030501800 D2549030502000
D2549030502200 D2549030502400 D2549030502600 D2549030502800 D2549030503000
D2549030503200 D2549030503400 D2549030503600 R225401107-000 R225401107-002
R225401115-002 R225401128-000 R225401133-000 R225401134-000 R225401139-000
R225401145-000 R225401146-000 R225401146-002 R225401188-000 R225401188-002
R225401188-004 R225401188-006

220. Disassembly of the Cable Harness Assembly

A. General

A complete disassembly of the component is not necessary and not recommended.

Do not disassemble the component more than it is necessary for:

- Cleaning
- Visual Inspection
- Replacement of defective parts.

B. Procedure

WARNING: **BE CAREFUL WHEN YOU USE SOLVENTS/CLEANING AGENTS, SEALANTS AND OTHER MATERIALS. OBEY THE MATERIAL MANUFACTURER'S INSTRUCTIONS AND THE LOCAL REGULATIONS. MAKE SURE THAT THERE IS A GOOD FLOW OF AIR THROUGH THE WORK AREA. DO NOT BREATHE THE FUMES. DO NOT SMOKE. DO NOT USE THESE MATERIALS NEAR A FLAME, SPARKS OR SOURCES OF HEAT. USE PROTECTIVE CLOTHING, GOGGLES AND GLOVES. IF YOU GET ONE OF THESE MATERIALS ON YOUR SKIN OR IN YOUR EYES, FLUSH IT AWAY WITH A FLOW OF CLEAN WATER. IF YOU GET ONE OF THESE MATERIALS IN YOUR MOUTH, GET IMMEDIATE MEDICAL AID. IN GENERAL, THESE MATERIALS ARE POISONOUS, FLAMMABLE AND SKIN IRRITANTS.**

CAUTION: **DO ALL THE WORK ON A CLEAN, SOFT SURFACE TO PREVENT DAMAGE TO THE COMPONENTS.**

SUB TASK 25-41-51-000-084-A01

D2549010500000 D2549010500400 D2549010500600 D2549010500800
D2549020500000 D2549020500200 D2549020500400 D2549020500600
D2549020500800 D2549020501000 D2549020501800 R225401146-000

1. Disassembly of the Cable Harness Assembly (27-1)

   NOTE: **It is recommended that you only remove the components if they are damaged.**

   (a) Disconnect the cables, the cable terminals 27-270 and the pre insulated terminals 27-260, 27-280 from the electrical components.

   (b) Remove the screws 27-200, the nuts 27-220, the receptacle connector 27-010, the identification sleeve 27-370, the connector backshell 27-030 and the bracket 27-190.

   (c) Remove the plug connector 27-040 and the connector backshell 27-060.

   (d) Remove the socket contacts 27-050, the receptacle connectors 27-140, the cable brackets 27-150, the protective caps 27-160 and the plugs or the plug connectors 27-510.

   (e) Remove the splices 27-110, the cable terminals 27-120 and the housings 27-130.

   (f) Remove the pre insulated terminals 27-480, 27-490, the terminal board assembly 27-410 and the cover assembly 27-420.

   (g) Remove the cable terminals 27-120 and the housings 27-130.

(h) Remove the cable terminals 27-090 and the insulations 27-100.

(i) Remove the screws 27-020, the nuts 27-220, the receptacle connector 27-170, the connector backshell 27-180 and the bracket 27-230.

(j) Remove the splices 27-070.

(k) Remove the splices 27-070 and the contact pins 27-080.

(l) Remove the cable terminals 27-120 and the housings 27-130.

(m) Remove the plug connector 27-450, the cable bracket 27-460 and the protective cap 27-470.

(n) Remove the plug or the connector backshell 27-520, the plug connector 27-240 and the connector backshell 27-250.

(o) Remove the plug connector 27-430 and the connector backshell 27-440.

SUB TASK 25-41-51-000-084-B01

D2547161903000 D2549010501000 D2549010501200 D2549010501400
D2549010501600 D2549010501800 D2549010502000 D2549010502200
D2549010502400 D2549010502600 D2549010502800 D2549010503200
D2549010503400 D2549010503600 D2549010503800 D2549010504200
D2549010504400 D2549010504600 D2549010504800 D2549010505000
D2549010505200 D2549010505400 D2549010505600 D2549010505800
D2549010506000 D2549010506200 D2549010506400 D2549010506800
D2549010507000 D2549010507200 D2549010507400 D2549010507600
D2549010507800 D2549010508000 D2549010508200 D2549010508400
D2549010508600 D2549010508800 D2549010509000 D2549010509200
D2549010511200 D2549020501200 D2549020501400 D2549020501600
D2549020502000 D2549020502400 D2549020502600 D2549020502800
D2549020503000 D2549020503200 D2549020503400 D2549020503600
D2549020503800 D2549020504000 D2549020504200 D2549020504400
D2549020504600 D2549020504800 D2549020505000 D2549020505200
D2549020505400 D2549020505800 D2549020506000 D2549020600000
D2549020600200 D2549020600400 D2549020600800 D2549020601000
D2549020601200 D2549020601400 D2549020601600 D2549020601800
D2549020602000 D2549020602400 D2549020602600 D2549020602800
D2549020603000 D2549020603200 D2549020603400 D2549020603600
D2549020603800 D2549020604000 D2549020606400 D2549020606600
D2549020607200 D2549030500400 D2549030500600 D2549030500800
D2549030501000 D2549030501200 D2549030501400 D2549030501600
D2549030501800 D2549030502000 D2549030502200 D2549030502400
D2549030502600 D2549030502800 D2549030503000 D2549030503200
D2549030503400 D2549030503600 R225401107-000 R225401107-002 R225401115-

002 R225401128-000 R225401133-000 R225401134-000 R225401139-000 R225401145-000 R225401146-002 R225401188-000 R225401188-002 R225401188-004 R225401188-006

2. Disassembly of the Cable Harness Assembly (27-1)

NOTE: **It is recommended that you only remove the components if they are damaged.**

(a) Disconnect the cables from the electrical components.

(b) Remove the screws 27-200, the nuts 27-220, the receptacle connector 27-010, the identification sleeve 27-370, the connector backshell 27-030 and the bracket 27-190.

(c) Remove the plug connector 27-040 and the connector backshell 27-060.

(d) Remove the socket contacts 27-050, the receptacle connectors 27-140, the cable brackets 27-150, the protective caps 27-160 and the plugs or the plug connectors 27-510.

(e) Remove the splices 27-110, the cable terminals 27-120 and the housings 27-130.

(f) Remove the pre insulated terminals 27-480, 27-490, the terminal board assembly 27-410 and the cover assembly 27-420.

(g) Remove the cable terminals 27-120 and the housings 27-130.

(h) Remove the cable terminals 27-090 and the insulations 27-100.

(i) Remove the screws 27-020, the nuts 27-220, the receptacle connector 27-170, the connector backshell 27-180 and the bracket 27-230.

(j) Remove the splices 27-070.

(k) Remove the splices 27-070 and the contact pins 27-080.

(l) Remove the cable terminals 27-120 and the housings 27-130.

(m) Remove the plug connector 27-450, the cable bracket 27-460 and the protective cap 27-470.

(n) Remove the plug or the connector backshell 27-520, the plug connector 27-240 and the connector backshell 27-250.

(o) Remove the plug connector 27-430 and the connector backshell 27-440.

TASK 25-41-51-000-822-B01

D2549010509400 D2549010509600 D2549010509800 D2549010510000 D2549010510200
D2549010510400 D2549010510800 D2549010511000 D2549010511400 D2549010511600
D2549010511800 D2549010512000 D2549010512200 D2549010512400 D2549010512600
D2549010513000 D2549010513200 D2549010513400 D2549010513600 D2549010513800
D2549010514000 D2549010514200 D2549010514400 D2549010514600 D2549010514800
D2549010600000 D2549010600200 D2549010600400 D2549010600600 D2549010600800
D2549010601000 D2549010601200 D2549010601400 D2549010601600 D2549010601800
D2549010602000 D2549010602200 D2549010602400 D2549010602600 D2549010602800
D2549010603000 D2549010603200 D2549010603400 D2549010603600 D2549010603800
D2549010604400 D2549010604600 D2549010604800 D2549020506200 D2549020506400
D2549020506600 D2549020506800 D2549020507000 D2549020507200 D2549020602200
D2549020604200 D2549020604400 D2549020604600 D2549020604800 D2549020605000
D2549020605200 D2549020605400 D2549020605600 D2549020606000 D2549020606800
D2549020607000 D2549020607400 D2549020607600 D2549020607800 D2549020608200
D2549020608400 D2549020608600 D2549020608800 D2549020609000 D2549020609200
D2549020609400 D2549020609600 D2549020609800 D2549020610000 D2549020610200
D2549020610400 D2549020610600 D2549020610800 D2549020611000 D2549020611200
D2549020611400 D2549020611600 D2549020611800 D2549020612000 D2549020612200
D2549020612400 D2549020612600 D2549020612800 D2549020613000 D2549020613200
D2549020613600 D2549020613800 D2549020614000 D2549020614400 D2549020614600
D2549020614800 D2549020700000 D2549020700400 D2549020700600 D2549020700800
D2549020701000 D2549020701200 D2549020701400 D2549020701800 D2549020702000
D2549020702200 D2549020702400 D2549020702600 D2549020702800 D2549020703200
D2549020703400 D2549020703600 D2549020703800 D2549020704000 D2549020704200
D2549020704400 D2549020704600 D2549020704800 D2549020705000 D2549020705200
D2549020705400 D2549020705600 D2549020706000 D2549020706200 D2549020706400
D2549020706600 D2549020706800 D2549020707000 D2549020707200 D2549020707400
D2549020707600 D2549020707800 D2549020710000 D2549020710200 D2549020710800
D2549020711000 D2549020711200 D2549020711400 D2549020712000 D2549020712200
D2549020712400 D2549030504000 D2549030504200 D2549030504600 D2549030504800
D2549030505200 D2549030505400 D2549030505600 D2549030505800 D2549030506000
D2549030506200 D2549030506400 D2549030506600 D2549030506800 D2549030507000
D2549030507200 D2549030507400 D2549030507600 D2549030507800 D2549030508000
D2549030508200 D2549030508400 D2549030508600 D2549030508800 D2549030509000
D2549030509200 D2549030509400 D2549030509600 D2549030509800 D2549030510000
D2549030510200 D2549030510400 D2549030510600 D2549030510800 D2549030511000
D2549030511200 D2549030511400 D2549030511600 D2549030511800 D2549030512000
D2549030512200 D2549030512400 D2549030512800 D2549030513000 D2549030513200
D2549030513400 D2549030513600 D2549030513800 D2549030514000 D2549030514200
D2549030514400 D2549030514600 D2549030514800 D2549030600000 D2549030600400
D2549030600600 D2549030600800 D2549030601000 D2549030601200 D2549030601400
D2549030603400 D2549030603600 D2549030603800 D2549030604400 D2549030604600
D2549030604800 D2549030605000 D2549030605800 R225401107-004 R225401134-002
R225401134-004 R225401134-006 R225401134-016 R225401134-018 R225401134-020
R225401136-010 R225401136-016 R225401136-020 R225401137-000 R225401137-002
R225401137-004 R225401137-006 R225401137-008 R225401137-010 R225401137-012

R225401137-014 R225401142-000 R225401142-002 R225401145-002 R225401145-012 R225401152-000 R225401152-002 R225401153-000 R225401159-000 R225401160-000 R225401160-002 R225401168-004 R225401168-006 R225401168-016 R225401168-018 R225401172-002 R225401172-004 R225401172-006 R225401172-010 R225401175-000 R225401175-002 R225401176-000 R225401195-000 R225401196-000 R225401196-046 R225401600-000 R225401603-000

221. Disassembly of the Cable Harness Assembly

A. General

A complete disassembly of the component is not necessary and not recommended.

Do not disassemble the component more than it is necessary for:

- Cleaning
- Visual Inspection
- Replacement of defective parts.

B. Procedure

WARNING: **BE CAREFUL WHEN YOU USE SOLVENTS/CLEANING AGENTS, SEALANTS AND OTHER MATERIALS. OBEY THE MATERIAL MANUFACTURER'S INSTRUCTIONS AND THE LOCAL REGULATIONS. MAKE SURE THAT THERE IS A GOOD FLOW OF AIR THROUGH THE WORK AREA. DO NOT BREATHE THE FUMES. DO NOT SMOKE. DO NOT USE THESE MATERIALS NEAR A FLAME, SPARKS OR SOURCES OF HEAT. USE PROTECTIVE CLOTHING, GOGGLES AND GLOVES. IF YOU GET ONE OF THESE MATERIALS ON YOUR SKIN OR IN YOUR EYES, FLUSH IT AWAY WITH A FLOW OF CLEAN WATER. IF YOU GET ONE OF THESE MATERIALS IN YOUR MOUTH, GET IMMEDIATE MEDICAL AID. IN GENERAL, THESE MATERIALS ARE POISONOUS, FLAMMABLE AND SKIN IRRITANTS.**

CAUTION: **DO ALL THE WORK ON A CLEAN, SOFT SURFACE TO PREVENT DAMAGE TO THE COMPONENTS.**

SUB TASK 25-41-51-000-085-A01

1. Disassembly of the Cable Harness Assembly (27A-1)

NOTE: **It is recommended that you only remove the components if they are damaged.**

(a) Disconnect the cables from the electrical components.

(b) Remove the screws 27A-200, the nuts 27A-380, the receptacle connector 27A-010, the identification sleeve 27A-320, the plugs 27A-390, the connector backshell 27A-030 and the bracket 27A-190.

(c) Remove the plug connector 27A-040 and the connector backshell 27A-060.

(d) Remove the socket contacts 27A-050, the receptacle connectors 27A-140, the cable brackets 27A-150, the protective caps 27A-160 and the identification ties 27A-350.

(e) Remove the splices 27A-110, the cable terminals 27A-120 and the housings 27A-130.

(f) Remove the cable terminals 27A-120 and the housings 27A-130.

(g) Remove the cable terminals 27A-090 and the insulations 27A-100.

(h) Remove the splices 27A-070.

(i) Remove the splices 27A-070 and the contact pins 27A-080.

(j) Remove the cable terminals 27A-120 and the housings 27A-130.

(k) Remove the screws 27A-020, the nuts 27A-380, the receptacle connector 27A-170, the connector backshell 27A-180 and the bracket 27A-210.

(l) Remove the plug 27A-400, the plug connector 27A-220, the connector backshell 27A-230 and the cable ties 27A-360.

TASK 25-41-51-000-822-C01
D2549010604000 D2549010604200 D2549010605600 D2549020701600 D2549020708600 D2549020708800 D2549020709000 D2549020709200 D2549020709400 D2549020709800 D2549020710400 D2549020712600 D2549020712800 D2549020713400 D2549020713600 D2549020714400 D2549030601600 D2549030601800 D2549030602000 D2549030602200 D2549030602400 D2549030602600 D2549030602800 D2549030603000 D2549030605200 R225401134-022 R225401152-004 R225401168-014 R225401168-028 R225401172-008 R225401600-002

222. Disassembly of the Cable Harness Assembly

A. General

A complete disassembly of the component is not necessary and not recommended.

Do not disassemble the component more than it is necessary for:

- Cleaning
- Visual Inspection
- Replacement of defective parts.

B. Procedure

WARNING: **BE CAREFUL WHEN YOU USE SOLVENTS/CLEANING AGENTS, SEALANTS AND OTHER MATERIALS. OBEY THE MATERIAL MANUFACTURER'S INSTRUCTIONS AND THE LOCAL REGULATIONS. MAKE SURE THAT THERE IS A GOOD FLOW OF AIR THROUGH THE WORK AREA. DO NOT BREATHE THE FUMES. DO NOT SMOKE. DO NOT USE THESE MATERIALS NEAR A FLAME, SPARKS OR SOURCES OF HEAT. USE PROTECTIVE CLOTHING, GOGGLES AND GLOVES. IF YOU GET ONE OF THESE MATERIALS ON YOUR SKIN OR IN YOUR EYES, FLUSH IT AWAY WITH A FLOW OF CLEAN WATER. IF YOU GET ONE OF THESE MATERIALS IN YOUR MOUTH, GET IMMEDIATE MEDICAL AID. IN GENERAL, THESE MATERIALS ARE POISONOUS, FLAMMABLE AND SKIN IRRITANTS.**

CAUTION: **DO ALL THE WORK ON A CLEAN, SOFT SURFACE TO PREVENT DAMAGE TO THE COMPONENTS.**

SUB TASK 25-41-51-000-087-A01
1. Disassembly of the Cable Harness Assembly (27B-1)

NOTE: **It is recommended that you only remove the components if they are damaged.**

(a) Disconnect the cables from the electrical components.

(b) Remove the screws 27B-200, the nuts 27B-380, the receptacle connector 27B-010, the identification sleeve 27B-320, the plugs 27B-390, the connector backshell 27B-030 and the bracket 27B-190.

(c) Remove the plug connector 27B-040 and the connector backshell 27B-060.

(d) Remove the socket contacts 27B-050, the receptacle connectors 27B-140, the cable brackets 27B-150, the protective caps 27B-160 and the identification ties 27B-350.

(e) Remove the splices 27B-110, the cable terminals 27B-120 and the housings 27B-130.

(f) Remove the connector 27B-410 and the spring latch 27B-420.

(g) Remove the cable terminals 27B-120 and the housings 27B-130.

(h) Remove the cable terminals 27B-090 and the insulations 27B-100.

(i) Remove the splices 27B-070.

(j) Remove the splices 27B-070 and the contact pins 27B-080.

(k) Remove the cable terminals 27B-120 and the housings 27B-130.

(l) Remove the screws 27B-020, the nuts 27B-380, the receptacle connector 27B-170, the connector backshell 27B-180 and the bracket 27B-210.

(m) Remove the plug connector 27B-220, the plug 27B-400, the connector backshell 27B-230 and the cable ties 27B-360.

TASK 25-41-51-000-822-D01

D2549010400000 D2549010400200 D2549010400400 D2549010400600 D2549010400800
D2549010402000 D2549010402600 D2549010402800 D2549010403000 D2549010605000
D2549010605200 D2549010605800 D2549010606000 D2549010606200 D2549010606400
D2549010606600 D2549010606800 D2549010607000 D2549010607200 D2549010607400
D2549010607600 D2549010607800 D2549010608200 D2549010608400 D2549010608600
D2549010608800 D2549010609000 D2549010609200 D2549010609400 D2549010609600
D2549010609800 D2549010610000 D2549010610200 D2549010610400 D2549010610800
D2549010611000 D2549010611200 D2549010611400 D2549010611600 D2549010611800
D2549010612000 D2549010612200 D2549010612400 D2549010612600 D2549010613000
D2549010613200 D2549010613400 D2549010613800 D2549010614200 D2549010614400
D2549010614600 D2549010614800 D2549020400000 D2549020400200 D2549020400400
D2549020403800 D2549020404200 D2549020404400 D2549020404600 D2549020404800
D2549020405000 D2549020405200 D2549020405400 D2549020405600 D2549020405800
D2549020406200 D2549020502200 D2549020505600 D2549020507400 D2549020507600
D2549020508000 D2549020508200 D2549020508400 D2549020508600 D2549020508800
D2549020509000 D2549020509200 D2549020509600 D2549020509800 D2549020510000
D2549020510400 D2549020510600 D2549020510800 D2549020511000 D2549020511200
D2549020511600 D2549020511800 D2549020512000 D2549020512200 D2549020512400
D2549020512600 D2549020512800 D2549020513000 D2549020513200 D2549020513400
D2549020513600 D2549020513800 D2549020514000 D2549020514200 D2549020514400
D2549020514600 D2549020514800 D2549020705800 D2549020708000 D2549020709600
D2549020710600 D2549020711600 D2549020713000 D2549020713200 D2549020713800
D2549020714000 D2549020714600 D2549020800000 D2549020800200 D2549020800400
D2549020800600 D2549020800800 D2549020801000 D2549020801200 D2549020801400
D2549020801600 D2549020801800 D2549020802000 D2549020802200 D2549020802400
D2549020802600 D2549020802800 D2549020803000 D2549020803200 D2549020803400
D2549020803600 D2549020803800 D2549020804000 D2549020804200 D2549020804800
D2549020805000 D2549020805200 D2549020805400 D2549020805600 D2549020805800
D2549020806000 D2549020806200 D2549020806400 D2549020806600 D2549020806800
D2549020807000 D2549020807400 D2549020807600 D2549020807800 D2549020808200
D2549020808400 D2549020808600 D2549020808800 D2549020809000 D2549020809400
D2549020809800 D2549020810000 D2549020810200 D2549020810400 D2549020810600
D2549020810800 D2549020811200 D2549020811400 D2549020811600 D2549020811800
D2549020812000 D2549020812200 D2549020812400 D2549020812600 D2549020813000
D2549020813200 D2549020813400 D2549020813600 D2549020813800 D2549020814000
D2549020814200 D2549020814400 D2549020814600 D2549020814800 D2549030400000
D2549030400200 D2549030400400 D2549030400600 D2549030401000 D2549030401200
D2549030401400 D2549030401600 D2549030401800 D2549030402000 D2549030402200
D2549030402400 D2549030402600 D2549030402800 D2549030403000 D2549030403400
D2549030403600 D2549030403800 D2549030404000 D2549030404200 D2549030404400
D2549030404600 D2549030404800 D2549030405000 D2549030405200 D2549030405400
D2549030405600 D2549030405800 D2549030406000 D2549030406400 D2549030406600
D2549030406800 D2549030407000 D2549030407200 D2549030407400 D2549030407600
D2549030407800 D2549030408000 D2549030408200 D2549030408400 D2549030408600
D2549030409800 D2549030410400 D2549030503800 D2549030600200 D2549030603200
D2549030604200 D2549030605400 D2549030605600 D2549030606000 D2549030606200

D2549030606400 D2549030606600 D2549030606800 D2549030607000 D2549030607200
D2549030607400 D2549030607600 D2549030607800 D2549030608000 D2549030608200
D2549030608400 D2549030608600 D2549030608800 D2549030609000 D2549030609200
D2549030609800 D2549030610000 D2549030610400 D2549030610600 D2549030611000
D2549030611200 D2549030611400 D2549030611600 D2549030611800 D2549030612000
D2549030612200 D2549030612400 D2549030612600 D2549030612800 D2549030613200
D2549030613400 D2549030613600 D2549030613800 D2549030614000 D2549030614200
D2549030614400 D2549030614600 D2549030614800 R225401115-000 R225401134-008
R225401134-010 R225401134-012 R225401134-024 R225401134-026 R225401134-028
R225401134-030 R225401134-032 R225401134-034 R225401134-036 R225401136-000
R225401136-004 R225401136-018 R225401136-022 R225401137-016 R225401145-004
R225401145-006 R225401145-008 R225401145-010 R225401145-014 R225401152-006
R225401152-008 R225401168-000 R225401168-002 R225401168-008 R225401168-010
R225401168-012 R225401168-020 R225401168-022 R225401168-024 R225401168-026
R225401172-000 R225401172-012 R225401172-014 R225401172-016 R225401172-018
R225401183-000 R225401183-002 R225401183-008 R225401192-000 R225401192-002
R225401196-002 R225401196-004 R225401196-006 R225401196-008 R225401196-010
R225401196-012 R225401196-014 R225401196-016 R225401196-034 R225401196-036
R225401196-038 R225401196-040 R225401196-044 R225401196-048 R225401196-050
R225401196-052 R225401196-054 R225401196-056 R225401196-058 R225401196-060
R225401196-062 R225401199-000 R225401199-002 R225401199-004 R225401199-006
R225401199-008 R225401199-010 R225401600-004 R225401605-000 R225401605-002
R225401609-000 R225401611-006 R225401611-008 R225401611-010 R225401611-012
R225401613-000 R225401614-000 R225401618-000 R225401618-002 R225401619-000
R225401619-002 R225401622-000 R225401622-002 R225401625-000 R225401629-000
R225401629-002 R225401639-000 R225401639-002 R225401643-000 R225401643-002
R225401643-004 R225401646-000 R225401647-000 R225401648-000 R225401648-002
R225401656-000 R225401656-002 R225401658-000 R225401662-000 R225401662-002
R225401693-000

223. Disassembly of the Cable Harness Assembly

A. General

A complete disassembly of the component is not necessary and not recommended.

Do not disassemble the component more than it is necessary for:

- Cleaning
- Visual Inspection
- Replacement of defective parts.

B. Procedure

WARNING: **BE CAREFUL WHEN YOU USE SOLVENTS/CLEANING AGENTS, SEALANTS AND OTHER MATERIALS. OBEY THE MATERIAL MANUFACTURER'S INSTRUCTIONS AND THE LOCAL REGULATIONS. MAKE SURE THAT THERE IS A GOOD FLOW OF AIR THROUGH THE WORK AREA. DO NOT BREATHE THE FUMES. DO NOT SMOKE. DO NOT USE THESE MATERIALS NEAR A FLAME, SPARKS OR SOURCES OF HEAT. USE PROTECTIVE CLOTHING, GOGGLES AND GLOVES. IF YOU GET ONE OF THESE MATERIALS ON YOUR SKIN OR IN YOUR EYES, FLUSH IT AWAY WITH A FLOW OF CLEAN WATER. IF YOU GET ONE OF THESE MATERIALS IN YOUR MOUTH, GET IMMEDIATE MEDICAL AID. IN GENERAL, THESE MATERIALS ARE POISONOUS, FLAMMABLE AND SKIN IRRITANTS.**

CAUTION: **DO ALL THE WORK ON A CLEAN, SOFT SURFACE TO PREVENT DAMAGE TO THE COMPONENTS.**

SUB TASK 25-41-51-000-088-A01

1. Disassembly of the Cable Harness Assembly (27C-1)

NOTE: **It is recommended that you only remove the components if they are damaged.**

(a) Disconnect the cables from the electrical components.

(b) Remove the screws 27C-200, the nuts 27C-380, the receptacle connector 27C-010, the identification sleeve 27C-320, the plugs 27C-390, the connector backshell 27C-030 and the bracket 27C-190.

(c) Remove the plug connector 27C-040 and the connector backshell 27C-060.

(d) Remove the socket contacts 27C-050, the receptacle connectors 27C-140, the cable brackets 27C-150, the protective caps 27C-160 and the identification ties 27C-350.

(e) Remove the splices 27C-110, the cable terminals 27C-120 and the housings 27C-130.

(f) Remove the connector 27C-410 and the spring latch 27C-420.

(g) Remove the cable terminals 27C-120 and the housings 27C-130.

(h) Remove the cable terminals 27C-090 and the insulations 27C-100.

(i) Remove the splices 27C-070.

(j) Remove the splices 27C-070 and the contact pins 27C-080.

(k) Remove the cable terminals 27C-120 and the housings 27C-130.

(l) Remove the screws 27C-020, the nuts 27C-380, the receptacle connector 27C-170, the connector backshell 27C-180 and the bracket 27C-210.

(m) Remove the plug 27C-400, the plug connector 27C-220, the connector backshell 27C-230 and the cable ties 27C-360.

TASK 25-41-51-000-822-E01

D2549010405200 D2549010405600 D2549020301600 D2549020411200 D2549020412000 D2549020412200 D2549020412400 D2549020413200 D2549020413600 D2549020413800 D2549020414000 D2549020414600 D2549020414800 D2549020507800 D2549020605800 D2549020708200 D2549020708400 D2549020812800 D2549030409600 D2549030410800 D2549030413000 D2549030414000 D2549030414200 D2549030414600 D2549030700000 D2549030700600 D2549030700800 D2549030701400 D2549030701600 D2549030701800 D2549030702000 D2549030702200 D2549030702400 D2549030702800 D2549030703000 D2549030703200 D2549030703800 D2549030704000 D2549030704600 D2549030704800 D2549030705600 D2549040500200 D2549040500400 D2549040500600 D2549040500800 D2549040501000 D2549040501200 D2549040501400 D2549040501600 D2549040501800 D2549040502000 R225401136-008 R225401136-014 R225401611-020 R225401671-000 R225401671-002 R225401673-000 R225401673-002 R225401673-004 R225401673-006 R225401691-000 R225401691-002 R225401697-000 R225401697-002 R225401803-000 R225401803-002 R225401808-000 R225401814-000

224. Disassembly of the Cable Harness Assembly

A. General

A complete disassembly of the component is not necessary and not recommended.

Do not disassemble the component more than it is necessary for:

- Cleaning
- Visual Inspection
- Replacement of defective parts.

B. Procedure

WARNING: **BE CAREFUL WHEN YOU USE SOLVENTS/CLEANING AGENTS, SEALANTS AND OTHER MATERIALS. OBEY THE MATERIAL MANUFACTURER'S INSTRUCTIONS AND THE LOCAL REGULATIONS. MAKE SURE THAT THERE IS A GOOD FLOW OF AIR THROUGH THE WORK AREA. DO NOT BREATHE THE FUMES. DO NOT SMOKE. DO NOT USE THESE MATERIALS NEAR A FLAME, SPARKS OR SOURCES OF HEAT. USE PROTECTIVE CLOTHING, GOGGLES AND GLOVES. IF YOU GET ONE OF THESE MATERIALS ON YOUR SKIN OR IN YOUR EYES, FLUSH IT AWAY WITH A FLOW OF CLEAN WATER. IF YOU GET ONE OF THESE MATERIALS IN YOUR MOUTH, GET IMMEDIATE MEDICAL AID. IN GENERAL, THESE MATERIALS ARE POISONOUS, FLAMMABLE AND SKIN IRRITANTS.**

CAUTION: **DO ALL THE WORK ON A CLEAN, SOFT SURFACE TO PREVENT DAMAGE TO THE COMPONENTS.**

SUB TASK 25-41-51-000-089-A01

D2549010405200 D2549010405600 D2549020301600 D2549020411200 D2549020412000 D2549020412200 D2549020412400 D2549020413200 D2549020413600 D2549020413800 D2549020414000 D2549020414600 D2549020414800 D2549020507800 D2549020605800 D2549020708200 D2549020708400 D2549020812800 D2549030409600 D2549030410800 D2549030413000 D2549030414000 D2549030414200 D2549030414600 D2549030700000 D2549030700800 D2549030701400 D2549030701600 D2549030701800 D2549030702000 D2549030702200 D2549030702400 D2549030702800 D2549030703000 D2549030703200 D2549030703800 D2549030704000 D2549030704600 D2549030704800 D2549030705600 D2549040500200 D2549040500400 D2549040500600 D2549040500800 D2549040501000 D2549040501200 D2549040501400 D2549040501600 D2549040501800 D2549040502000 R225401136-008 R225401136-014 R225401611-020 R225401671-000 R225401671-002 R225401673-000 R225401673-002 R225401673-004 R225401673-006 R225401691-000 R225401691-002 R225401697-000 R225401697-002 R225401803-000 R225401803-002 R225401808-000 R225401814-000

1. Disassembly of the Cable Harness Assembly (27D-1)

   NOTE: **It is recommended that you only remove the components if they are damaged.**

   (a) Disconnect the cables from the electrical components.

   (b) Remove the screws 27D-550, the nuts 27D-300, the receptacle connector 27D-520, the identification sleeves 27D-130, 27D-580, the plugs 27D-220, the connector backshell 27D-530, the labels 27D-570, the cable ties 27D-590 and the bracket 27D-540.

   (c) Remove the splices 27D-010, the contact pins 27D-020, the identification ties 27D-030, the socket contacts 27D-050, 27D-330, the connector backshell 27D-060, the plug connector 27D-070, the relay 27D-310, the base 27D-320 and the angle 27D-340.

   (d) Remove the identification ties 27D-030, the socket contacts 27D-050, the connector 27D-080, the spring latches 27D-090, the receptacle connector 27D-100, the cable bracket 27D-110 and the protective cap 27D-120.

   (e) Remove the identification sleeves 27D-130, the modules 27D-180, 27D-190, the rail 27D-200, the end clamps 27D-210 and the plugs 27D-220.

   (f) Remove the cable terminals 27D-140 and the housings 27D-150.

   (g) Remove the cable terminals 27D-160 and the insulations 27D-170.

(h) Remove the nuts 27D-300, the receptacle connector 27D-270, the connector backshell 27D-280 and the bracket 27D-290.

(i) Remove the cable terminals 27D-140 and the housings 27D-150.

(j) Remove the plugs 27D-390, the plug connector 27D-410, the connector backshell 27D-420 and the cable ties 27D-400.

SUB TASK 25-41-51-000-089-B01
D2549030700600

2. Disassembly of the Cable Harness Assembly (27D-1)

NOTE: **It is recommended that you only remove the components if they are damaged.**

(a) Disconnect the cables from the electrical components.

(b) Remove the screws 27D-550, the nuts 27D-300, the receptacle connector 27D-520, the identification sleeves 27D-130, the plugs 27D-220, the connector backshell 27D-530, the labels 27D-570, the cable ties 27D-590 and the bracket 27D-540.

(c) Remove the splices 27D-010, the contacts 27D-020, the identification ties 27D-030, the socket contacts 27D-050, 27D-330, the connector backshell 27D-060, the plug connector 27D-070, the relay 27D-310, the base 27D-320 and the angle 27D-340.

(d) Remove the identification ties 27D-030, the socket contacts 27D-050, the connector 27D-080, the spring latches 27D-090, the receptacle connector 27D-100, the cable bracket 27D-110 and the protective cap 27D-120.

(e) Remove the identification sleeves 27D-130, the modules 27D-180, 27D-190, the rail 27D-200, the end clamps 27D-210 and the plugs 27D-220.

(f) Remove the cable terminals 27D-140 and the housings 27D-150.

(g) Remove the cable terminals 27D-160 and the insulations 27D-170.

(h) Remove the nuts 27D-300, the receptacle connector 27D-270, the connector backshell 27D-280 and the bracket 27D-290.

(i) Remove the cable terminals 27D-140 and the housings 27D-150.

(j) Remove the plugs 27D-390, the plug connector 27D-410, the connector backshell 27D-420 and the cable ties 27D-400.

TASK 25-41-51-000-822-F01

D2547160900200 D2547160900400 D2549010401000 D2549010401400 D2549010401600
D2549010401800 D2549010402400 D2549010403200 D2549010403400 D2549010403600
D2549010403800 D2549010404000 D2549010404200 D2549010404400 D2549010404600
D2549010404800 D2549010405000 D2549010405400 D2549010405800 D2549010406000
D2549010406200 D2549010406400 D2549010406800 D2549010407000 D2549010510600
D2549010610600 D2549010613600 D2549020300000 D2549020300400 D2549020300600
D2549020300800 D2549020301000 D2549020301800 D2549020302000 D2549020302800
D2549020400600 D2549020400800 D2549020401000 D2549020401200 D2549020401400
D2549020401600 D2549020402000 D2549020402200 D2549020402400 D2549020402600
D2549020403000 D2549020403200 D2549020403400 D2549020403600 D2549020404000
D2549020406000 D2549020406400 D2549020406600 D2549020406800 D2549020407000
D2549020407200 D2549020407400 D2549020407600 D2549020407800 D2549020408000
D2549020408200 D2549020408600 D2549020408800 D2549020409000 D2549020409200
D2549020409400 D2549020409600 D2549020409800 D2549020410200 D2549020410400
D2549020410600 D2549020410800 D2549020411000 D2549020411400 D2549020411600
D2549020411800 D2549020412600 D2549020412800 D2549020413000 D2549020413400
D2549020414200 D2549020700200 D2549020804400 D2549020807200 D2549020809600
D2549030409000 D2549030409200 D2549030409400 D2549030410000 D2549030410200
D2549030410600 D2549030411200 D2549030411400 D2549030411600 D2549030411800
D2549030412000 D2549030412200 D2549030412400 D2549030412600 D2549030412800
D2549030413200 D2549030413400 D2549030413600 D2549030414400 D2549030414800
D2549030500200 D2549030610200 D2549030700200 D2549030700400 D2549030701000
D2549030701200 D2549030702600 D2549030703400 D2549030703600 D2549030704200
D2549030704400 D2549030705200 R225401134-014 R225401134-038 R225401136-006
R225401136-012 R225401136-024 R225401152-010 R225401183-004 R225401183-006
R225401196-018 R225401196-020 R225401196-022 R225401196-024 R225401196-042
R225401196-064 R225401196-066 R225401196-068 R225401196-070 R225401199-012
R225401602-000 R225401611-000 R225401611-014 R225401611-016 R225401611-018
R225401624-000 R225401627-000 R225401627-002 R225401627-004 R225401643-006
R225401643-008 R225401646-002 R225401648-004 R225401648-006 R225401648-008
R225401649-000 R225401675-000 R225401683-000 R225401685-000 R225401685-002
R225401688-000 R225401689-004 R225401689-006 R225401811-000

225. Disassembly of the Cable Harness Assembly

A. General

A complete disassembly of the component is not necessary and not recommended.

Do not disassemble the component more than it is necessary for:

- Cleaning
- Visual Inspection
- Replacement of defective parts.

B. Procedure

WARNING: **BE CAREFUL WHEN YOU USE SOLVENTS/CLEANING AGENTS, SEALANTS AND OTHER MATERIALS. OBEY THE MATERIAL MANUFACTURER'S INSTRUCTIONS AND THE LOCAL REGULATIONS. MAKE SURE THAT THERE IS A GOOD FLOW OF AIR THROUGH THE WORK AREA. DO NOT BREATHE THE FUMES. DO NOT SMOKE. DO NOT USE THESE MATERIALS NEAR A FLAME, SPARKS OR SOURCES OF HEAT. USE PROTECTIVE CLOTHING, GOGGLES AND GLOVES. IF YOU GET ONE OF THESE MATERIALS ON YOUR SKIN OR IN YOUR EYES, FLUSH IT AWAY WITH A FLOW OF CLEAN WATER. IF YOU GET ONE OF THESE MATERIALS IN YOUR MOUTH, GET IMMEDIATE MEDICAL AID. IN GENERAL, THESE MATERIALS ARE POISONOUS, FLAMMABLE AND SKIN IRRITANTS.**

CAUTION: **DO ALL THE WORK ON A CLEAN, SOFT SURFACE TO PREVENT DAMAGE TO THE COMPONENTS.**

SUB TASK 25-41-51-000-091-A01

D2547160900200 D2547160900400 D2549010401000 D2549010401400 D2549010401600 D2549010401800 D2549010402400 D2549010403400 D2549010403600 D2549010404200 D2549010404400 D2549010405400 D2549010406000 D2549010406200 D2549010406400 D2549010406800 D2549010613600 D2549020300000 D2549020300400 D2549020300600 D2549020300800 D2549020301000 D2549020301800 D2549020302000 D2549020302800 D2549020400600 D2549020401000 D2549020401200 D2549020401400 D2549020402000 D2549020402400 D2549020402600 D2549020403200 D2549020403400 D2549020403600 D2549020404000 D2549020406000 D2549020406400 D2549020406600 D2549020407000 D2549020407400 D2549020407600 D2549020407800 D2549020408000 D2549020408600 D2549020408800 D2549020409000 D2549020409200 D2549020409400 D2549020409600 D2549020409800 D2549020410400 D2549020410600 D2549020411000 D2549020411400 D2549020411600 D2549020412600 D2549020413000 D2549020413400 D2549020700200 D2549020804400 D2549020807200 D2549020809600 D2549030409200 D2549030410000 D2549030410200 D2549030410600 D2549030411200 D2549030411400 D2549030411600 D2549030411800 D2549030412400 D2549030412600 D2549030413200 D2549030413600 D2549030414400 D2549030414800 D2549030700200 D2549030700400 D2549030701000 D2549030702600 D2549030703400 D2549030703600 R225401136-006 R225401136-012 R225401136-024 R225401152-010 R225401196-018 R225401196-020 R225401196-

022 R225401196-024 R225401196-042 R225401196-064 R225401196-066 R225401196-068 R225401196-070 R225401199-012 R225401602-000 R225401611-000 R225401611-014 R225401611-016 R225401611-018 R225401627-000 R225401627-002 R225401627-004 R225401643-006 R225401643-008 R225401648-004 R225401648-006 R225401648-008 R225401649-000 R225401675-000 R225401683-000 R225401688-000

1. Disassembly of the Cable Harness Assembly (27E-1)

NOTE: **It is recommended that you only remove the components if they are damaged.**

(a) Disconnect the cables from the electrical components.

(b) Remove the screws 27E-430, the nuts 27E-240, the receptacle connector 27E-400, the identification sleeves 27E-110, 27E-460, the plugs 27E-200, the connector backshell 27E-410, the labels 27E-450, the cable ties 27E-470 and the bracket 27E-420.

(c) Remove the splices 27E-010, the contact pins 27E-020, the identification ties 27E-030, the socket contacts 27E-050, the connector backshell 27E-060 and the plug connector 27E-070.

(d) Remove the identification ties 27E-030, the socket contacts 27E-050, the receptacle connector 27E-080, the cable bracket 27E-090 and the protective cap 27E-100.

(e) Remove the identification sleeves 27E-110, the modules 27E-160, 27E-170, the rail 27E-180, the end clamps 27E-190 and the plugs 27E-200.

(f) Remove the cable terminals 27E-120 and the housings 27E-130.

(g) Remove the cable terminals 27E-140 and the insulations 27E-150.

(h) Remove the nuts 27E-240, the receptacle connector 27E-210, the connector backshell 27E-220 and the bracket 27E-230.

(i) Remove the cable terminals 27E-120 and the housings 27E-130.

(j) Remove the plug connector 27E-290, the connector backshell 27E-300 and the cable ties 27E-280.

SUB TASK 25-41-51-000-091-B01

D2549010403200 D2549010403800 D2549010404000 D2549010404600 D2549010404800 D2549010405000 D2549010405800 D2549010407000 D2549010510600 D2549010610600 D2549020400800 D2549020401600

D2549020402200 D2549020403000 D2549020406800 D2549020407200 D2549020408200 D2549020410200 D2549020410800 D2549020411800 D2549020412800 D2549020414200 D2549030409000 D2549030409400 D2549030412000 D2549030412200 D2549030412800 D2549030413400 D2549030610200 D2549030701200 D2549030704200 D2549030704400 D2549030705200 R225401134-014 R225401134-038 R225401183-004 R225401183-006 R225401624-000 R225401646-002 R225401685-000 R225401685-002 R225401689-004 R225401689-006 R225401811-000

2. Disassembly of the Cable Harness Assembly (27E-1)

NOTE: **It is recommended that you only remove the components if they are damaged.**

(a) Disconnect the cables from the electrical components.

(b) Remove the screws 27E-430, the nuts 27E-240, the receptacle connector 27E-400, the identification sleeves 27E-110, 27E-460, the plugs 27E-200, the connector backshell 27E-410, the labels 27E-450, the cable ties 27E-470 and the bracket 27E-420.

(c) Remove the splices 27E-010, the contact pins 27E-020, the identification ties 27E-030, the socket contacts 27E-050, the connector backshell 27E-060 and the plug connector 27E-070.

(d) Remove the identification ties 27E-030, the socket contacts 27E-050, the receptacle connector 27E-080, the cable bracket 27E-090 and the protective cap 27E-100.

(e) Remove the socket contacts 27E-560, the connector 27E-530, the spring latches 27E-540 and the backshell 27E-550.

(f) Remove the identification sleeves 27E-110, the modules 27E-160, 27E-170, the rail 27E-180, the end clamps 27E-190 and the plugs 27E-200.

(g) Remove the cable terminals 27E-120 and the housings 27E-130.

(h) Remove the cable terminals 27E-140 and the insulations 27E-150.

(i) Remove the nuts 27E-240, the receptacle connector 27E-210, the connector backshell 27E-220 and the bracket 27E-230.

(j) Remove the cable terminals 27E-120 and the housings 27E-130.

(k) Remove the plug connector 27E-290, the connector backshell 27E-300 and the cable ties 27E-280.

SUB TASK 25-41-51-000-091-C01
D2549030500200

3. Disassembly of the Cable Harness Assembly

(a) Not applicable.

TASK 25-41-51-000-822-G01
D2549010402200 R225401676-000

226. Disassembly of the Cable Harness Assembly

A. General

- Not applicable

B. Procedure

SUB TASK 25-41-51-000-093-A01
1. Disassembly of the Cable Harness Assembly

(a) Not applicable.

TASK 25-41-51-000-823-A01

D2549010610800 D2549010611000 D2549010611200 D2549010611600 D2549010611800 D2549010612000 D2549010612200 D2549010612400 D2549010612600 D2549010613200 D2549010613400 D2549020513200 D2549020714000 D2549020801400 D2549020802400 D2549020804000 D2549020804200 D2549020804800 D2549020805000 D2549020805400 D2549020805600 D2549020805800 D2549020806000 D2549020806200 D2549020806400 D2549020806800 D2549020807000 D2549020807400 D2549020807600 D2549020808200 D2549020808400 D2549020808600 D2549020808800 D2549020809000 D2549020809400 D2549020809800 D2549020810000 D2549020810200 D2549020810600 D2549020811400 D2549020811600 D2549020811800 D2549020812000 D2549030400600 D2549030401000 D2549030401200 D2549030401400 D2549030401600 D2549030401800 D2549030402000 D2549030402200 D2549030402400 D2549030402600 D2549030402800 D2549030403000 D2549030403400 D2549030403600 D2549030404200 D2549030404400 D2549030404800 D2549030405000 D2549030405200 D2549030405400 D2549030405600 D2549030603200 D2549030612600 D2549030613600 R225401134-030 R225401134-032 R225401134-034 R225401145-010 R225401152-008 R225401168-008 R225401168-010 R225401168-012 R225401168-024 R225401168-026 R225401192-002 R225401196-008 R225401196-010 R225401196-012 R225401196-040 R225401196-044 R225401196-054 R225401196-056 R225401196-058 R225401199-000 R225401199-008 R225401609-000 R225401622-000 R225401622-002 R225401646-000 R225401647-000 R225401648-000

227. Disassembly of the Electrical System of the Cockpit Door Locking

A. General

A complete disassembly of the component is not necessary and not recommended.

Do not disassemble the component more than it is necessary for:

- Cleaning
- Visual Inspection
- Replacement of defective parts.

B. Procedure

WARNING: **BE CAREFUL WHEN YOU USE SOLVENTS/CLEANING AGENTS, SEALANTS AND OTHER MATERIALS. OBEY THE MATERIAL MANUFACTURER'S INSTRUCTIONS AND THE LOCAL REGULATIONS. MAKE SURE THAT THERE IS A GOOD FLOW OF AIR THROUGH THE WORK AREA. DO NOT BREATHE THE FUMES. DO NOT SMOKE. DO NOT USE THESE MATERIALS NEAR A FLAME, SPARKS OR SOURCES OF HEAT. USE PROTECTIVE CLOTHING, GOGGLES AND GLOVES. IF YOU GET ONE OF THESE MATERIALS ON YOUR SKIN OR IN YOUR EYES, FLUSH IT AWAY WITH A FLOW OF CLEAN WATER. IF YOU GET ONE OF THESE MATERIALS IN YOUR MOUTH, GET IMMEDIATE MEDICAL AID. IN GENERAL, THESE MATERIALS ARE POISONOUS, FLAMMABLE AND SKIN IRRITANTS.**

CAUTION: **DO ALL THE WORK ON A CLEAN, SOFT SURFACE TO PREVENT DAMAGE TO THE COMPONENTS.**

SUB TASK 25-41-51-000-098-A01

1. Disassembly of the Electrical System of the Cockpit Door Locking (31-1)

NOTE: **It is recommended that you only remove the components if they are damaged.**

(a) Remove and disassemble the cable harness assembly 31-010 as follows:

1 Remove the identification ties 31-070 and the identification sleeves 31-120.

2 Remove the screws 31-040, the nuts 31-050, the bracket 31-030, the receptacle connector 31-020 and the connector backshell 31-060.

(b) Remove the spring sheets 31-230.

(c) Remove the screws 31-240 and the washers 31-250.

TASK 25-41-51-000-823-B01

D2549010400000 D2549010400200 D2549010400400 D2549010400600 D2549010400800 D2549010402000 D2549010402600 D2549010402800 D2549010403000 D2549010611400 D2549010613000 D2549010613800 D2549010614200 D2549010614400 D2549010614600 D2549010614800 D2549020400000 D2549020400200 D2549020403800 D2549020404200 D2549020404400 D2549020404600 D2549020404800 D2549020405000 D2549020405200 D2549020405400 D2549020405600 D2549020405800 D2549020406200 D2549020513800 D2549020801800 D2549020805200 D2549020806600 D2549020807800 D2549020810400 D2549020810800 D2549020811200 D2549020812200 D2549020812400 D2549020812600 D2549020812800 D2549020813000 D2549020813200 D2549020813400 D2549020813600 D2549020813800 D2549020814000 D2549020814200 D2549020814400 D2549020814600 D2549020814800 D2549030404000 D2549030404600 D2549030405800 D2549030406000 D2549030406400 D2549030406600 D2549030406800 D2549030407000 D2549030407200 D2549030407400 D2549030407600 D2549030407800 D2549030408000 D2549030408200 D2549030408400 D2549030409800 D2549030614000 D2549040500200 R225401134-036 R225401136-004 R225401136-018 R225401196-014 R225401196-016 R225401196-060 R225401196-062 R225401199-010 R225401611-006 R225401611-012 R225401639-000 R225401639-002 R225401643-000 R225401643-004 R225401648-002 R225401656-000 R225401656-002 R225401658-000 R225401662-000

228. Disassembly of the Electrical System of the Cockpit Door Locking

A. General

A complete disassembly of the component is not necessary and not recommended.

Do not disassemble the component more than it is necessary for:

- Cleaning
- Visual Inspection
- Replacement of defective parts.

B. Procedure

WARNING: **BE CAREFUL WHEN YOU USE SOLVENTS/CLEANING AGENTS, SEALANTS AND OTHER MATERIALS. OBEY THE MATERIAL MANUFACTURER'S INSTRUCTIONS AND THE LOCAL REGULATIONS. MAKE SURE THAT THERE IS A GOOD FLOW OF AIR THROUGH THE WORK AREA. DO NOT BREATHE THE FUMES. DO NOT SMOKE. DO NOT USE THESE MATERIALS NEAR A FLAME, SPARKS OR SOURCES OF HEAT. USE PROTECTIVE CLOTHING, GOGGLES AND GLOVES. IF YOU GET ONE OF THESE MATERIALS ON YOUR SKIN OR IN YOUR EYES, FLUSH IT AWAY WITH A FLOW OF CLEAN WATER. IF YOU GET ONE OF THESE MATERIALS IN YOUR MOUTH, GET IMMEDIATE MEDICAL AID. IN GENERAL, THESE MATERIALS ARE POISONOUS, FLAMMABLE AND SKIN IRRITANTS.**

CAUTION: **DO ALL THE WORK ON A CLEAN, SOFT SURFACE TO PREVENT DAMAGE TO THE COMPONENTS.**

SUB TASK 25-41-51-000-101-A01

1. Disassembly of the Electrical System of the Cockpit Door Locking (31A-1)

NOTE: **It is recommended that you only remove the components if they are damaged.**

(a) Remove and disassemble the cable harness assembly 31A-010 as follows:

1 Remove the plug connector 31A-020 and the connector backshell 31A-030.

2 Remove the cable ties 31A-040 and the identification sleeves 31A-190.

3 Remove the coupling screws 31A-070, the cable ties 31A-040, the receptacle connector 31A-050 and the backshell 31A-060.

(b) Remove the spring sheets 31A-180.

(c) Remove the screw 31A-160, the washer 31A-170 and the clamp 31A-140.

(d) Remove the screw 31A-160, the washer 31A-170 and the clamp 31A-150.

TASK 25-41-51-000-823-C01

D2547160900200 D2547160900400 D2549010401000 D2549010401400 D2549010401600
D2549010401800 D2549010402200 D2549010402400 D2549010403200 D2549010403400
D2549010403600 D2549010403800 D2549010404000 D2549010404200 D2549010404400
D2549010404600 D2549010404800 D2549010405200 D2549010405400 D2549010405600
D2549010406000 D2549010406200 D2549010406400 D2549010406800 D2549010610600
D2549010613600 D2549020300000 D2549020300400 D2549020300600 D2549020300800
D2549020301000 D2549020301600 D2549020301800 D2549020302800 D2549020400400
D2549020400600 D2549020400800 D2549020401000 D2549020401200 D2549020401600
D2549020402000 D2549020402200 D2549020402400 D2549020402600 D2549020403000
D2549020403200 D2549020403400 D2549020403600 D2549020404000 D2549020406000
D2549020406400 D2549020406600 D2549020406800 D2549020407000 D2549020407200
D2549020407400 D2549020407800 D2549020408000 D2549020408200 D2549020408600
D2549020408800 D2549020409000 D2549020409200 D2549020409400 D2549020409600
D2549020409800 D2549020410200 D2549020410400 D2549020410600 D2549020410800
D2549020411200 D2549020411400 D2549020411800 D2549020412000 D2549020412200
D2549020412400 D2549020412600 D2549020412800 D2549020413000 D2549020413600
D2549020414200 D2549020414600 D2549020414800 D2549020804400 D2549020807200
D2549020809600 D2549030408600 D2549030409000 D2549030409200 D2549030409400
D2549030409600 D2549030410000 D2549030410200 D2549030410400 D2549030410600
D2549030410800 D2549030411200 D2549030411400 D2549030411600 D2549030411800
D2549030412000 D2549030412200 D2549030412400 D2549030412600 D2549030412800
D2549030413000 D2549030413200 D2549030413400 D2549030413600 D2549030414000
D2549030414200 D2549030414400 D2549030414600 D2549030414800 D2549030610200
D2549030700000 D2549030700200 D2549030700400 D2549030700600 D2549030700800
D2549030701200 D2549030701400 D2549030701800 D2549030702000 D2549030702200
D2549030702800 D2549030703000 D2549030703200 D2549030703600 D2549030703800
D2549030704200 D2549030704400 D2549030704600 D2549030704800 D2549030705200
D2549030705600 D2549040500400 D2549040500600 D2549040500800 D2549040501200
D2549040501600 D2549040501800 D2549040502000 R225401134-014 R225401134-038
R225401136-006 R225401136-008 R225401136-012 R225401136-014 R225401136-024
R225401152-010 R225401183-004 R225401183-006 R225401196-018 R225401196-020
R225401196-022 R225401196-024 R225401196-042 R225401196-064 R225401196-066
R225401196-068 R225401196-070 R225401199-012 R225401602-000 R225401611-000
R225401611-014 R225401611-016 R225401611-018 R225401611-020 R225401624-000
R225401643-002 R225401643-006 R225401643-008 R225401646-002 R225401648-004
R225401648-006 R225401648-008 R225401649-000 R225401662-002 R225401671-000
R225401671-002 R225401673-000 R225401673-002 R225401675-000 R225401676-000
R225401685-000 R225401685-002 R225401688-000 R225401689-004 R225401689-006
R225401691-000 R225401697-000 R225401697-002 R225401803-000 R225401803-002
R225401808-000 R225401811-000 R225401814-000

229. Disassembly of the Electrical System of the Cockpit Door Locking

A. General

A complete disassembly of the component is not necessary and not recommended.

Do not disassemble the component more than it is necessary for:

- Cleaning
- Visual Inspection
- Replacement of defective parts.

B. Job Set-up Information

(1) Not applicable

C. Procedure

WARNING: **BE CAREFUL WHEN YOU USE SOLVENTS/CLEANING AGENTS, SEALANTS AND OTHER MATERIALS. OBEY THE MATERIAL MANUFACTURER'S INSTRUCTIONS AND THE LOCAL REGULATIONS. MAKE SURE THAT THERE IS A GOOD FLOW OF AIR THROUGH THE WORK AREA. DO NOT BREATHE THE FUMES. DO NOT SMOKE. DO NOT USE THESE MATERIALS NEAR A FLAME, SPARKS OR SOURCES OF HEAT. USE PROTECTIVE CLOTHING, GOGGLES AND GLOVES. IF YOU GET ONE OF THESE MATERIALS ON YOUR SKIN OR IN YOUR EYES, FLUSH IT AWAY WITH A FLOW OF CLEAN WATER. IF YOU GET ONE OF THESE MATERIALS IN YOUR MOUTH, GET IMMEDIATE MEDICAL AID. IN GENERAL, THESE MATERIALS ARE POISONOUS, FLAMMABLE AND SKIN IRRITANTS.**

CAUTION: **DO ALL THE WORK ON A CLEAN, SOFT SURFACE TO PREVENT DAMAGE TO THE COMPONENTS.**

SUB TASK 25-41-51-040-106-A01

1. Disassembly of the Electrical System of the Cockpit Door Locking (31B-1)

NOTE: **It is recommended that you only remove the components if they are damaged.**

(a) Remove and disassemble the cable harness assembly 31B-010 as follows:

1 Remove the plug connector 31B-020 and the connector backshell 31B-030.

2 Remove the cable ties 31B-040.

3 Remove the coupling screws 31B-070, the cable ties 31B-040, the receptacle connector 31B-050 and the backshell 31B-060.

(b) Remove the spring sheets 31B-180.

(c) Remove the screw 31B-160, the washer 31B-170 and the clamp 31B-140.

(d) Remove the screw 31B-160, the washer 31B-170 and the clamp 31B-150.

(e) Remove the screws 31B-240, 31B-250, the electric strikes 31B-200, the sheets 31B-210, 31B-220, the protective sleeves 31B-230 and the grommets 31B-260.

NOTE: For further instructions, see CMMV 25-20-22_80477 (electric strike).

(f) Remove the screws 31B-240, 31B-250, the center electric strike 31B-270, the sheets 31B-210, 31B-220, the protective sleeve 31B-230 and the grommet 31B-260.

NOTE: For further instructions, see CMMV 25-20-22_80477 (center electric strike).

TASK 25-41-51-000-823-D01

D2547161903000 D2549010405000 D2549010405800 D2549010407000 D2549010500000
D2549010500400 D2549010500600 D2549010500800 D2549010501000 D2549010501200
D2549010501400 D2549010501600 D2549010501800 D2549010502000 D2549010502200
D2549010502400 D2549010502600 D2549010502800 D2549010503200 D2549010503400
D2549010503600 D2549010503800 D2549010504200 D2549010504400 D2549010504600
D2549010504800 D2549010505000 D2549010505200 D2549010505400 D2549010505600
D2549010505800 D2549010506000 D2549010506200 D2549010506400 D2549010506800
D2549010507000 D2549010507200 D2549010507400 D2549010507600 D2549010507800
D2549010508000 D2549010508200 D2549010508400 D2549010508600 D2549010508800
D2549010509000 D2549010509200 D2549010509400 D2549010509600 D2549010509800
D2549010510000 D2549010510200 D2549010510400 D2549010510600 D2549010510800
D2549010511000 D2549010511200 D2549010511400 D2549010511600 D2549010511800
D2549010512000 D2549010512200 D2549010512400 D2549010512600 D2549010513000
D2549010513200 D2549010513400 D2549010513600 D2549010513800 D2549010514000
D2549010514200 D2549010514400 D2549010514600 D2549010514800 D2549010600000
D2549010600200 D2549010600400 D2549010600600 D2549010600800 D2549010601000
D2549010601200 D2549010601400 D2549010601600 D2549010601800 D2549010602000
D2549010602200 D2549010602400 D2549010602600 D2549010602800 D2549010603000
D2549010603200 D2549010603400 D2549010603600 D2549010603800 D2549010604000
D2549010604200 D2549010604400 D2549010604600 D2549010604800 D2549010605000
D2549010605200 D2549010605600 D2549010605800 D2549010606000 D2549010606200
D2549010606400 D2549010606600 D2549010606800 D2549010607000 D2549010607200
D2549010607400 D2549010607600 D2549010607800 D2549010608200 D2549010608400
D2549010608600 D2549010608800 D2549010609000 D2549010609200 D2549010609400
D2549010609600 D2549010609800 D2549010610000 D2549010610200 D2549010610400
D2549020302000 D2549020401400 D2549020407600 D2549020411000 D2549020411600
D2549020413200 D2549020413400 D2549020413800 D2549020414000 D2549020500000
D2549020500200 D2549020500400 D2549020500600 D2549020500800 D2549020501000
D2549020501200 D2549020501400 D2549020501600 D2549020501800 D2549020502000
D2549020502200 D2549020502400 D2549020502600 D2549020502800 D2549020503000
D2549020503200 D2549020503400 D2549020503600 D2549020503800 D2549020504000
D2549020504200 D2549020504400 D2549020504600 D2549020505000 D2549020505200
D2549020505400 D2549020505600 D2549020505800 D2549020506000 D2549020506200
D2549020506400 D2549020506600 D2549020506800 D2549020507000 D2549020507200
D2549020507400 D2549020507600 D2549020507800 D2549020508000 D2549020508200
D2549020508400 D2549020508600 D2549020508800 D2549020509000 D2549020509200
D2549020509600 D2549020509800 D2549020510000 D2549020510400 D2549020510600
D2549020510800 D2549020511000 D2549020511200 D2549020511600 D2549020511800
D2549020512000 D2549020512200 D2549020512400 D2549020512600 D2549020512800
D2549020513000 D2549020513400 D2549020513600 D2549020514000 D2549020514200
D2549020514400 D2549020514600 D2549020514800 D2549020600000 D2549020600200
D2549020600400 D2549020600800 D2549020601000 D2549020601200 D2549020601400
D2549020601600 D2549020601800 D2549020602000 D2549020602200 D2549020602400
D2549020602600 D2549020602800 D2549020603000 D2549020603200 D2549020603400
D2549020603600 D2549020603800 D2549020604000 D2549020604200 D2549020604400
D2549020604600 D2549020604800 D2549020605000 D2549020605200 D2549020605400

D2549020605600 D2549020605800 D2549020606000 D2549020606400 D2549020606600
D2549020606800 D2549020607000 D2549020607200 D2549020607400 D2549020607600
D2549020607800 D2549020608200 D2549020608400 D2549020608600 D2549020608800
D2549020609000 D2549020609200 D2549020609400 D2549020609600 D2549020609800
D2549020610000 D2549020610200 D2549020610400 D2549020610600 D2549020610800
D2549020611000 D2549020611200 D2549020611400 D2549020611600 D2549020611800
D2549020612000 D2549020612200 D2549020612400 D2549020612600 D2549020612800
D2549020613000 D2549020613200 D2549020613600 D2549020613800 D2549020614000
D2549020614400 D2549020614600 D2549020614800 D2549020700000 D2549020700200
D2549020700400 D2549020700600 D2549020700800 D2549020701000 D2549020701200
D2549020701400 D2549020701600 D2549020701800 D2549020702000 D2549020702200
D2549020702400 D2549020702600 D2549020702800 D2549020703200 D2549020703400
D2549020703600 D2549020703800 D2549020704000 D2549020704200 D2549020704400
D2549020704600 D2549020704800 D2549020705000 D2549020705200 D2549020705400
D2549020705600 D2549020705800 D2549020706000 D2549020706200 D2549020706400
D2549020706600 D2549020706800 D2549020707000 D2549020707200 D2549020707400
D2549020707600 D2549020707800 D2549020708000 D2549020708200 D2549020708400
D2549020708600 D2549020708800 D2549020709000 D2549020709200 D2549020709400
D2549020709600 D2549020709800 D2549020710000 D2549020710200 D2549020710400
D2549020710600 D2549020710800 D2549020711000 D2549020711200 D2549020711400
D2549020711600 D2549020712000 D2549020712200 D2549020712400 D2549020712600
D2549020712800 D2549020713000 D2549020713200 D2549020713400 D2549020713600
D2549020713800 D2549020714400 D2549020714600 D2549020800000 D2549020800200
D2549020800400 D2549020800600 D2549020800800 D2549020801000 D2549020801200
D2549020801600 D2549020802000 D2549020802200 D2549020802600 D2549020802800
D2549020803000 D2549020803200 D2549020803400 D2549020803600 D2549020803800
D2549030400000 D2549030400200 D2549030400400 D2549030403800 D2549030500200
D2549030500400 D2549030500600 D2549030500800 D2549030501000 D2549030501200
D2549030501400 D2549030501600 D2549030501800 D2549030502000 D2549030502200
D2549030502400 D2549030502600 D2549030502800 D2549030503000 D2549030503200
D2549030503400 D2549030503600 D2549030503800 D2549030504000 D2549030504200
D2549030504600 D2549030504800 D2549030505200 D2549030505400 D2549030505600
D2549030505800 D2549030506000 D2549030506200 D2549030506400 D2549030506600
D2549030506800 D2549030507000 D2549030507200 D2549030507400 D2549030507600
D2549030507800 D2549030508000 D2549030508200 D2549030508400 D2549030508600
D2549030508800 D2549030509000 D2549030509200 D2549030509400 D2549030509600
D2549030509800 D2549030510000 D2549030510200 D2549030510400 D2549030510600
D2549030510800 D2549030511000 D2549030511200 D2549030511400 D2549030511600
D2549030511800 D2549030512000 D2549030512200 D2549030512400 D2549030512800
D2549030513000 D2549030513200 D2549030513400 D2549030513600 D2549030513800
D2549030514000 D2549030514200 D2549030514400 D2549030514600 D2549030514800
D2549030600000 D2549030600200 D2549030600400 D2549030600600 D2549030600800
D2549030601000 D2549030601200 D2549030601400 D2549030601600 D2549030601800
D2549030602000 D2549030602200 D2549030602400 D2549030602600 D2549030602800
D2549030603000 D2549030603400 D2549030603600 D2549030603800 D2549030604200
D2549030604400 D2549030604600 D2549030604800 D2549030605000 D2549030605200
D2549030605400 D2549030605600 D2549030605800 D2549030606000 D2549030606200

D2549030606400 D2549030606600 D2549030606800 D2549030607000 D2549030607200
D2549030607400 D2549030607600 D2549030607800 D2549030608000 D2549030608200
D2549030608400 D2549030608600 D2549030608800 D2549030609000 D2549030609200
D2549030609800 D2549030610000 D2549030610400 D2549030610600 D2549030611000
D2549030611200 D2549030611400 D2549030611600 D2549030611800 D2549030612000
D2549030612200 D2549030612400 D2549030612800 D2549030613200 D2549030613400
D2549030613800 D2549030614200 D2549030614400 D2549030614600 D2549030614800
D2549030701000 D2549030701600 D2549030702400 D2549030702600 D2549030703400
D2549030704000 D2549040501000 D2549040501400 R225401107-000 R225401107-002
R225401107-004 R225401115-000 R225401115-002 R225401128-000 R225401133-000
R225401134-000 R225401134-002 R225401134-004 R225401134-006 R225401134-008
R225401134-010 R225401134-012 R225401134-016 R225401134-018 R225401134-020
R225401134-022 R225401134-024 R225401134-026 R225401134-028 R225401136-000
R225401136-010 R225401136-016 R225401136-020 R225401136-022 R225401137-000
R225401137-002 R225401137-004 R225401137-006 R225401137-008 R225401137-010
R225401137-012 R225401137-014 R225401137-016 R225401139-000 R225401142-000
R225401142-002 R225401145-000 R225401145-002 R225401145-004 R225401145-006
R225401145-008 R225401145-012 R225401145-014 R225401146-000 R225401146-002
R225401152-000 R225401152-002 R225401152-004 R225401152-006 R225401153-000
R225401159-000 R225401160-000 R225401160-002 R225401168-000 R225401168-002
R225401168-004 R225401168-006 R225401168-014 R225401168-016 R225401168-018
R225401168-020 R225401168-022 R225401168-028 R225401172-000 R225401172-002
R225401172-004 R225401172-006 R225401172-008 R225401172-010 R225401172-012
R225401172-014 R225401172-016 R225401172-018 R225401175-000 R225401175-002
R225401176-000 R225401183-000 R225401183-002 R225401183-008 R225401188-000
R225401188-002 R225401188-004 R225401188-006 R225401192-000 R225401195-000
R225401196-000 R225401196-002 R225401196-004 R225401196-006 R225401196-034
R225401196-036 R225401196-038 R225401196-046 R225401196-048 R225401196-050
R225401196-052 R225401199-002 R225401199-004 R225401199-006 R225401600-000
R225401600-002 R225401600-004 R225401603-000 R225401605-000 R225401605-002
R225401611-008 R225401611-010 R225401613-000 R225401614-000 R225401618-000
R225401618-002 R225401619-000 R225401619-002 R225401625-000 R225401627-000
R225401627-002 R225401627-004 R225401629-000 R225401629-002 R225401673-004
R225401673-006 R225401683-000 R225401691-002 R225401693-000

230. Disassembly of the Electrical System of the Cockpit Door Locking

A. General

A complete disassembly of the component is not necessary and not recommended.

Do not disassemble the component more than it is necessary for:

- Cleaning
- Visual Inspection
- Replacement of defective parts.

B. Job Set-up Information

(1) Not applicable

C. Procedure

WARNING: **BE CAREFUL WHEN YOU USE SOLVENTS/CLEANING AGENTS, SEALANTS AND OTHER MATERIALS. OBEY THE MATERIAL MANUFACTURER'S INSTRUCTIONS AND THE LOCAL REGULATIONS. MAKE SURE THAT THERE IS A GOOD FLOW OF AIR THROUGH THE WORK AREA. DO NOT BREATHE THE FUMES. DO NOT SMOKE. DO NOT USE THESE MATERIALS NEAR A FLAME, SPARKS OR SOURCES OF HEAT. USE PROTECTIVE CLOTHING, GOGGLES AND GLOVES. IF YOU GET ONE OF THESE MATERIALS ON YOUR SKIN OR IN YOUR EYES, FLUSH IT AWAY WITH A FLOW OF CLEAN WATER. IF YOU GET ONE OF THESE MATERIALS IN YOUR MOUTH, GET IMMEDIATE MEDICAL AID. IN GENERAL, THESE MATERIALS ARE POISONOUS, FLAMMABLE AND SKIN IRRITANTS.**

CAUTION: **DO ALL THE WORK ON A CLEAN, SOFT SURFACE TO PREVENT DAMAGE TO THE COMPONENTS.**

SUB TASK 25-41-51-040-109-A01

D2549010405000 D2549010405800 D2549010407000 D2549020302000 D2549020401400 D2549020407600 D2549020411000 D2549020411600 D2549020413200 D2549020413400 D2549020413800 D2549020414000 D2549030701000 D2549030701600 D2549030702400 D2549030702600 D2549030703400 D2549030704000 D2549040501000 D2549040501400 R225401627-000 R225401627-002 R225401627-004 R225401673-004 R225401673-006 R225401683-000 R225401691-002

1. Disassembly of the Electrical System of the Cockpit Door Locking (31C-1)

NOTE: **It is recommended that you only remove the components if they are damaged.**

(a) Remove and disassemble the cable harness assembly 31C-010 as follows:

1 Remove the plug connector 31C-020 and the connector backshell 31C-030.

2 Remove the cable ties 31C-040.

3 Remove the coupling screws 31C-070, the cable ties 31C-040, the receptacle connector 31C-050 and the backshell 31C-060.

(b) Remove the spring sheets 31C-190.

(c) Remove the screw 31C-170, the washer 31C-180 and the clamp 31C-150.

(d) Remove the screw 31C-170, the washer 31C-180 and the clamp 31C-160.

(e) Remove the screws 31C-240, 31C-250, the electric strikes 31C-200, the sheets 31C-210, 31C-220, the protective sleeves 31C-230 and the grommets 31C-260.

NOTE: For further instructions, see CMMV 25-20-22_80477 (electric strike).

(f) Remove the screws 31C-240, 31C-250, the center electric strike 31C-270, the sheets 31C-210, 31C-220, the protective sleeve 31C-230, the grommet 31C-260 and the dead bolt assembly 31C-280.

NOTE: For further instructions, see CMMV 25-20-22_80477 (center electric strike).

SUB TASK 25-41-51-040-109-B01

D2547161903000 D2549010500000 D2549010500400 D2549010500600
D2549010500800 D2549010501000 D2549010501200 D2549010501400
D2549010501600 D2549010501800 D2549010502000 D2549010502200
D2549010502400 D2549010502600 D2549010502800 D2549010503200
D2549010503400 D2549010503600 D2549010503800 D2549010504200
D2549010504400 D2549010504600 D2549010504800 D2549010505000
D2549010505200 D2549010505400 D2549010505600 D2549010505800
D2549010506000 D2549010506200 D2549010506400 D2549010506800
D2549010507000 D2549010507200 D2549010507400 D2549010507600
D2549010507800 D2549010508000 D2549010508200 D2549010508400
D2549010508600 D2549010508800 D2549010509000 D2549010509200
D2549010509400 D2549010509600 D2549010509800 D2549010510000
D2549010510200 D2549010510400 D2549010510600 D2549010510800
D2549010511000 D2549010511200 D2549010511400 D2549010511600
D2549010511800 D2549010512000 D2549010512200 D2549010512400
D2549010512600 D2549010513000 D2549010513200 D2549010513400
D2549010513600 D2549010513800 D2549010514000 D2549010514200
D2549010514400 D2549010514600 D2549010514800 D2549010600000
D2549010600200 D2549010600400 D2549010600600 D2549010600800
D2549010601000 D2549010601200 D2549010601400 D2549010601600
D2549010601800 D2549010602000 D2549010602200 D2549010602400

D2549010602600 D2549010602800 D2549010603000 D2549010603200
D2549010603400 D2549010603600 D2549010603800 D2549010604000
D2549010604200 D2549010604400 D2549010604600 D2549010604800
D2549010605000 D2549010605200 D2549010605600 D2549010605800
D2549010606000 D2549010606200 D2549010606400 D2549010606600
D2549010606800 D2549010607000 D2549010607200 D2549010607400
D2549010607600 D2549010607800 D2549010608200 D2549010608400
D2549010608600 D2549010608800 D2549010609000 D2549010609200
D2549010609400 D2549010609600 D2549010609800 D2549010610000
D2549010610200 D2549010610400 D2549020500000 D2549020500200
D2549020500400 D2549020500600 D2549020500800 D2549020501000
D2549020501200 D2549020501400 D2549020501600 D2549020501800
D2549020502000 D2549020502200 D2549020502400 D2549020502600
D2549020502800 D2549020503000 D2549020503200 D2549020503400
D2549020503600 D2549020503800 D2549020504000 D2549020504200
D2549020504400 D2549020504600 D2549020505000 D2549020505200
D2549020505400 D2549020505600 D2549020505800 D2549020506000
D2549020506200 D2549020506400 D2549020506600 D2549020506800
D2549020507000 D2549020507200 D2549020507400 D2549020507600
D2549020507800 D2549020508000 D2549020508200 D2549020508400
D2549020508600 D2549020508800 D2549020509000 D2549020509200
D2549020509600 D2549020509800 D2549020510000 D2549020510400
D2549020510600 D2549020510800 D2549020511000 D2549020511200
D2549020511600 D2549020511800 D2549020512000 D2549020512200
D2549020512400 D2549020512600 D2549020512800 D2549020513000
D2549020513400 D2549020513600 D2549020514000 D2549020514200
D2549020514400 D2549020514600 D2549020514800 D2549020600000
D2549020600200 D2549020600400 D2549020600800 D2549020601000
D2549020601200 D2549020601400 D2549020601600 D2549020601800
D2549020602000 D2549020602200 D2549020602400 D2549020602600
D2549020602800 D2549020603000 D2549020603200 D2549020603400
D2549020603600 D2549020603800 D2549020604000 D2549020604200
D2549020604400 D2549020604600 D2549020604800 D2549020605000
D2549020605200 D2549020605400 D2549020605600 D2549020605800
D2549020606000 D2549020606400 D2549020606600 D2549020606800
D2549020607000 D2549020607200 D2549020607400 D2549020607600
D2549020607800 D2549020608200 D2549020608400 D2549020608600
D2549020608800 D2549020609000 D2549020609200 D2549020609400
D2549020609600 D2549020609800 D2549020610000 D2549020610200
D2549020610400 D2549020610600 D2549020610800 D2549020611000
D2549020611200 D2549020611400 D2549020611600 D2549020611800
D2549020612000 D2549020612200 D2549020612400 D2549020612600
D2549020612800 D2549020613000 D2549020613200 D2549020613600
D2549020613800 D2549020614000 D2549020614400 D2549020614600
D2549020614800 D2549020700000 D2549020700200 D2549020700400
D2549020700600 D2549020700800 D2549020701000 D2549020701200
D2549020701400 D2549020701600 D2549020701800 D2549020702000

D2549020702200 D2549020702400 D2549020702600 D2549020702800
D2549020703200 D2549020703400 D2549020703600 D2549020703800
D2549020704000 D2549020704200 D2549020704400 D2549020704600
D2549020704800 D2549020705000 D2549020705200 D2549020705400
D2549020705600 D2549020705800 D2549020706000 D2549020706200
D2549020706400 D2549020706600 D2549020706800 D2549020707000
D2549020707200 D2549020707400 D2549020707600 D2549020707800
D2549020708000 D2549020708200 D2549020708400 D2549020708600
D2549020708800 D2549020709000 D2549020709200 D2549020709400
D2549020709600 D2549020709800 D2549020710000 D2549020710200
D2549020710400 D2549020710600 D2549020710800 D2549020711000
D2549020711200 D2549020711400 D2549020711600 D2549020712000
D2549020712200 D2549020712400 D2549020712600 D2549020712800
D2549020713000 D2549020713200 D2549020713400 D2549020713600
D2549020713800 D2549020714400 D2549020714600 D2549020800000
D2549020800200 D2549020800400 D2549020800600 D2549020800800
D2549020801000 D2549020801200 D2549020801600 D2549020802000
D2549020802200 D2549020802600 D2549020802800 D2549020803000
D2549020803200 D2549020803400 D2549020803600 D2549020803800
D2549030400000 D2549030400200 D2549030400400 D2549030403800
D2549030500200 D2549030500400 D2549030500600 D2549030500800
D2549030501000 D2549030501200 D2549030501400 D2549030501600
D2549030501800 D2549030502000 D2549030502200 D2549030502400
D2549030502600 D2549030502800 D2549030503000 D2549030503200
D2549030503400 D2549030503600 D2549030503800 D2549030504000
D2549030504200 D2549030504600 D2549030504800 D2549030505200
D2549030505400 D2549030505600 D2549030505800 D2549030506000
D2549030506200 D2549030506400 D2549030506600 D2549030506800
D2549030507000 D2549030507200 D2549030507400 D2549030507600
D2549030507800 D2549030508000 D2549030508200 D2549030508400
D2549030508600 D2549030508800 D2549030509000 D2549030509200
D2549030509400 D2549030509600 D2549030509800 D2549030510000
D2549030510200 D2549030510400 D2549030510600 D2549030510800
D2549030511000 D2549030511200 D2549030511400 D2549030511600
D2549030511800 D2549030512000 D2549030512200 D2549030512400
D2549030512800 D2549030513000 D2549030513200 D2549030513400
D2549030513600 D2549030513800 D2549030514000 D2549030514200
D2549030514400 D2549030514600 D2549030514800 D2549030600000
D2549030600200 D2549030600400 D2549030600600 D2549030600800
D2549030601000 D2549030601200 D2549030601400 D2549030601600
D2549030601800 D2549030602000 D2549030602200 D2549030602400
D2549030602600 D2549030602800 D2549030603000 D2549030603400
D2549030603600 D2549030603800 D2549030604200 D2549030604400
D2549030604600 D2549030604800 D2549030605000 D2549030605200
D2549030605400 D2549030605600 D2549030605800 D2549030606000
D2549030606200 D2549030606400 D2549030606600 D2549030606800
D2549030607000 D2549030607200 D2549030607400 D2549030607600

D2549030607800 D2549030608000 D2549030608200 D2549030608400 D2549030608600 D2549030608800 D2549030609000 D2549030609200 D2549030609800 D2549030610000 D2549030610400 D2549030610600 D2549030611000 D2549030611200 D2549030611400 D2549030611600 D2549030611800 D2549030612000 D2549030612200 D2549030612400 D2549030612800 D2549030613200 D2549030613400 D2549030613800 D2549030614200 D2549030614400 D2549030614600 D2549030614800 R225401107-000 R225401107-002 R225401107-004 R225401115-000 R225401115-002 R225401128-000 R225401133-000 R225401134-000 R225401134-002 R225401134-004 R225401134-006 R225401134-008 R225401134-010 R225401134-012 R225401134-016 R225401134-018 R225401134-020 R225401134-022 R225401134-024 R225401134-026 R225401134-028 R225401136-000 R225401136-010 R225401136-016 R225401136-020 R225401136-022 R225401137-000 R225401137-002 R225401137-004 R225401137-006 R225401137-008 R225401137-010 R225401137-012 R225401137-014 R225401137-016 R225401139-000 R225401142-000 R225401142-002 R225401145-000 R225401145-002 R225401145-004 R225401145-006 R225401145-008 R225401145-012 R225401145-014 R225401146-000 R225401146-002 R225401152-000 R225401152-002 R225401152-004 R225401152-006 R225401153-000 R225401159-000 R225401160-000 R225401160-002 R225401168-000 R225401168-002 R225401168-004 R225401168-006 R225401168-014 R225401168-016 R225401168-018 R225401168-020 R225401168-022 R225401168-028 R225401172-000 R225401172-002 R225401172-004 R225401172-006 R225401172-008 R225401172-010 R225401172-012 R225401172-014 R225401172-016 R225401172-018 R225401175-000 R225401175-002 R225401176-000 R225401183-000 R225401183-002 R225401183-008 R225401188-000 R225401188-002 R225401188-004 R225401188-006 R225401192-000 R225401195-000 R225401196-000 R225401196-002 R225401196-004 R225401196-006 R225401196-034 R225401196-036 R225401196-038 R225401196-046 R225401196-048 R225401196-050 R225401196-052 R225401199-002 R225401199-004 R225401199-006 R225401600-000 R225401600-002 R225401600-004 R225401603-000 R225401605-000 R225401605-002 R225401611-008 R225401611-010 R225401613-000 R225401614-000 R225401618-000 R225401618-002 R225401619-000 R225401619-002 R225401625-000 R225401629-000 R225401629-002 R225401693-000

2. Disassembly of the Electrical System of the Cockpit Door Locking

   (a) Not applicable.

TASK 25-41-51-000-823-E01
D2549020504800

231. Disassembly of the Electrical System of the Cockpit Door Locking

A. General

- Not applicable

B. Procedure

SUB TASK 25-41-51-000-097-A01
1. Disassembly of the Electrical System of the Cockpit Door Locking

(a) Not applicable.

TASK 25-41-51-000-824-A01

D2549010403200 D2549010404600 D2549010404800 D2549010500000 D2549010500800 D2549010501200 D2549010610600 D2549020300400 D2549020301000 D2549020302000 D2549020401400 D2549020401600 D2549020402000 D2549020402400 D2549020406800 D2549020408200 D2549020408800 D2549020409200 D2549020412800 D2549020413000 D2549020601200 D2549020804400 D2549030410600 D2549030410800 D2549030411600 D2549030411800 D2549030412200 D2549030414200 D2549030414800 D2549030703600 D2549030704200 R225401183-004 R225401183-006 R225401602-000 R225401624-000 R225401627-000 R225401627-002 R225401646-002 R225401685-000 R225401685-002 R225401811-000

232. Removal of the Housing

A. General

A complete disassembly of the component is not necessary and not recommended.

Do not disassemble the component more than it is necessary for:

- Cleaning
- Visual Inspection
- Replacement of defective parts.

B. Job Set-up Information
(1) Consumable Materials

REFERENCE	DESIGNATION
08-026	Adhesive/Sealant one Part, RTV Silicone Rubber

Table 3657
Consumable Materials

C. Procedure

WARNING: **BE CAREFUL WHEN YOU USE SOLVENTS/CLEANING AGENTS, SEALANTS AND OTHER MATERIALS. OBEY THE MATERIAL MANUFACTURER'S INSTRUCTIONS AND THE LOCAL REGULATIONS. MAKE SURE THAT THERE IS A GOOD FLOW OF AIR THROUGH THE WORK AREA. DO NOT BREATHE THE FUMES. DO NOT SMOKE. DO NOT USE THESE MATERIALS NEAR A FLAME, SPARKS OR SOURCES OF HEAT. USE PROTECTIVE CLOTHING, GOGGLES AND GLOVES. IF YOU GET ONE OF THESE MATERIALS ON YOUR SKIN OR IN YOUR EYES, FLUSH IT AWAY WITH A FLOW OF CLEAN WATER. IF YOU GET ONE OF THESE MATERIALS IN YOUR MOUTH, GET IMMEDIATE MEDICAL AID. IN GENERAL, THESE MATERIALS ARE POISONOUS, FLAMMABLE AND SKIN IRRITANTS.**

CAUTION: **DO ALL THE WORK ON A CLEAN, SOFT SURFACE TO PREVENT DAMAGE TO THE COMPONENTS.**

SUB TASK 25-41-51-010-117-A01

D2549010403200 D2549010404600 D2549010404800 D2549010610600 D2549020300400 D2549020301000 D2549020401600 D2549020402000 D2549020402400 D2549020406800 D2549020408800 D2549020409200 D2549020412800 D2549020413000 D2549020804400 D2549030410600 D2549030411600 D2549030411800 D2549030412200 D2549030414800 D2549030703600 D2549030704200 R225401183-004 R225401183-006 R225401602-000 R225401624-000 R225401646-002 R225401685-000 R225401685-002 R225401811-000

1. Removal of the Housing (07Z-1)

NOTE: **See TABLE 3658 for the references for the replacement procedure of permanent installed parts.**

More data for bonded parts are given in column SEE REPAIR TASK. Use the data for the selection of the related repair solution.

IPL FIG. ITEM	COMPONENT PART NAME	IPL FIG. ITEM	REPLACEMENT PART NAME	SEE REPAIR TASK
07Z-001 07Z-010	Housing Housing Assembly	07Z-020	Sliding Strip	Replacement of the Bonded Parts self adhesive

Table 3658
Reference list for the replacement of permanent installed parts

07Z-001 07Z-010	Housing Housing Assembly	07Z-030	Sliding Strip	Replacement of the Bonded Parts self adhesive
07Z-001	Housing	07Z-200	Section	Replacement of the Bonded Parts Material No. 08-026 Adhesive/ Sealant one Part, RTV Silicone Rubber
07Z-001	Housing	07Z-210	Sealing Section	Replacement of the Bonded Parts Material No. 08-026 Adhesive/ Sealant one Part, RTV Silicone Rubber
07Z-001	Housing	07Z-220	Placard	Replacement of the Self-adhesive Placards self adhesive
07Z-001	Housing	07Z-230	Placard	Replacement of the Self-adhesive Placards self adhesive

Table 3658
Reference list for the replacement of permanent installed parts

(b) Remove the screws 07Z-130, 07Z-140, 07Z-240, the washers 07Z-150, 07Z-250 and the housing assembly 07Z-010 from the lavatory structure.

(c) Remove the stud 07Z-180 from the housing assembly 07Z-010.

(d) Remove the glass mirror 07Z-170 from the screws 07Z-190.

(e) Remove the screws 07Z-190 from the housing assembly 07Z-010.

(f) Remove the screws 07Z-270 and the decor covers 07Z-260 from the housing assembly 07Z-010.

(g) Remove the screws 07Z-060 and the fittings 07Z-050.

SUB TASK 25-41-51-010-117-B01
D2549030410800 D2549030414200

2. Removal of the Housing (07Z-1)

NOTE: **See TABLE 3659 for the references for the replacement procedure of permanent installed parts.**
More data for bonded parts are given in column SEE REPAIR TASK. Use the data for the selection of the related repair solution.

IPL FIG. ITEM	COMPONENT PART NAME	IPL FIG. ITEM	REPLACEMENT PART NAME	SEE REPAIR TASK
07Z-001 07Z-010	Housing Housing Assembly	07Z-020	Sliding Strip	TBD self adhesive
07Z-001 07Z-010	Housing Housing Assembly	07Z-030	Sliding Strip	TBD self adhesive
07Z-001	Housing	07Z-175	Mirror Shading Foil	TBD self adhesive
07Z-001	Housing	07Z-200	Section	TBD Material No. 08-026 Adhesive/ Sealant one Part, RTV Silicone Rubber
07Z-001	Housing	07Z-210	Sealing Section	TBD Material No. 08-026 Adhesive/

Table 3659
Reference list for the replacement of permanent installed parts

				Sealant one Part, RTV Sili-cone Rubber
07Z-001	Housing	07Z-220	Placard	TBD self adhesive
07Z-001	Housing	07Z-230	Placard	TBD self adhesive

Table 3659
Reference list for the replacement of permanent installed parts

(b) Remove the screws 07Z-130, 07Z-140, 07Z-240, the washers 07Z-150, 07Z-250 and the housing assembly 07Z-010 from the lavatory structure.

(c) Remove the stud 07Z-180 from the housing assembly 07Z-010.

(d) Remove the glass mirror 07Z-170 from the screws 07Z-190.

(e) Remove the screws 07Z-190 from the housing assembly 07Z-010.

(f) Remove the screws 07Z-270 and the decor covers 07Z-260 from the housing assembly 07Z-010.

(g) Remove the screws 07Z-060 and the fittings 07Z-050.

SUB TASK 25-41-51-010-117-C01
D2549010500000 D2549010500800 D2549010501200 D2549020302000 D2549020401400 D2549020601200 R225401627-000 R225401627-002

3. Removal of the Housing (07Z-1)

NOTE: **See TABLE 3660 for the references for the replacement procedure of permanent installed parts.**

More data for bonded parts are given in column SEE REPAIR TASK. Use the data for the selection of the related repair solution.

IPL FIG. ITEM	COMPONENT PART NAME	IPL FIG. ITEM	REPLACEMENT PART NAME	SEE REPAIR TASK
07Z-001 07Z-010	Housing Housing Assembly	07Z-020	Sliding Strip	Replacement of the Bonded Parts self adhesive
07Z-001 07Z-010	Housing Housing Assembly	07Z-030	Sliding Strip	Replacement of the Bonded Parts self adhesive
07Z-001	Housing	07Z-200	Section	Replacement of the Bonded Parts Material No. 08-026 Adhesive/ Sealant one Part, RTV Silicone Rubber
07Z-001	Housing	07Z-210	Sealing Section	Replacement of the Bonded Parts Material No. 08-026 Adhesive/ Sealant one Part, RTV Silicone Rubber
07Z-001	Housing	07Z-220	Placard	Replacement of the Self-adhesive Placards self adhesive
07Z-001	Housing	07Z-230	Placard	Replacement of the Self-adhesive Placards self adhesive

Table 3660
Reference list for the replacement of permanent installed parts

(b) Remove the screws 07Z-130, 07Z-140, 07Z-240, the washers 07Z-150, 07Z-250 and the housing assembly 07Z-010 from the lavatory structure.

(c) Remove the stud 07Z-180 from the housing assembly 07Z-010.

(d) Remove the glass mirror 07Z-170 from the screws 07Z-190.

(e) Remove the screws 07Z-190 from the housing assembly 07Z-010.

(f) Remove the screws 07Z-270 and the decor covers 07Z-300, 07Z-310 from the housing assembly 07Z-010.

(g) Remove the screws 07Z-060 and the fittings 07Z-050.

SUB TASK 25-41-51-010-117-D01
D2549020408200

4. Removal of the Housing (07Z-1)

NOTE: **See TABLE 3661 for the references for the replacement procedure of permanent installed parts.**

More data for bonded parts are given in column SEE REPAIR TASK. Use the data for the selection of the related repair solution.

IPL FIG. ITEM	COMPONENT PART NAME	IPL FIG. ITEM	REPLACEMENT PART NAME	SEE REPAIR TASK
07Z-001 07Z-010	Housing Housing Assembly	07Z-020	Sliding Strip	Replacement of the Bonded Parts self adhesive
07Z-001 07Z-010	Housing Housing Assembly	07Z-030	Sliding Strip	Replacement of the Bonded Parts self adhesive
07Z-001	Housing	07Z-200	Section	Replacement of the Bonded Parts

Table 3661
Reference list for the replacement of permanent installed parts

				Material No. 08-026 Adhesive/ Sealant one Part, RTV Silicone Rubber
07Z-001	Housing	07Z-210	Sealing Section	Replacement of the Bonded Parts Material No. 08-026 Adhesive/ Sealant one Part, RTV Silicone Rubber
07Z-001	Housing	07Z-220	Placard	Replacement of the Self-adhesive Placards self adhesive
07Z-001	Housing	07Z-230	Placard	Replacement of the Self-adhesive Placards self adhesive

Table 3661
Reference list for the replacement of permanent installed parts

(b) Remove the screws 07Z-130, 07Z-140, 07Z-240, the washers 07Z-150, 07Z-160, 07Z-250 and the housing assembly 07Z-010 from the lavatory structure.

(c) Remove the stud 07Z-180 from the housing assembly 07Z-010.

(d) Remove the glass mirror 07Z-170 from the screws 07Z-190.

(e) Remove the screws 07Z-190 from the housing assembly 07Z-010.

(f) Remove the screws 07Z-270 and the decor covers 07Z-260 from the housing assembly 07Z-010.

(g) Remove the cosmetics holder 07Z-280.

NOTE: For further instructions, see CMMV 25-20-08_C5307 (cosmetics holder).

(h) Remove the screws 07Z-060 and the fittings 07Z-050.

TASK 25-41-51-000-824-B01

D2549010402400 D2549010403800 D2549010405000 D2549010405200 D2549010405800 D2549010406400 D2549010407000 D2549020409400 D2549020410400 D2549020411200 D2549020411600 D2549020414200 D2549030413400 D2549030414600 D2549030700600 D2549030700800 D2549030704400 D2549030704600 D2549030705600 R225401627-004

233. Removal of the Housing

A. General

A complete disassembly of the component is not necessary and not recommended.

Do not disassemble the component more than it is necessary for:

- Cleaning
- Visual Inspection
- Replacement of defective parts.

B. Job Set-up Information
(1) Consumable Materials

REFERENCE	DESIGNATION
08-026	Adhesive/Sealant one Part, RTV Silicone Rubber

Table 3662
Consumable Materials

C. Procedure

WARNING: **BE CAREFUL WHEN YOU USE SOLVENTS/CLEANING AGENTS, SEALANTS AND OTHER MATERIALS. OBEY THE MATERIAL MANUFACTURER'S INSTRUCTIONS AND THE LOCAL REGULATIONS. MAKE SURE THAT THERE IS A GOOD FLOW OF AIR THROUGH THE WORK AREA. DO NOT BREATHE THE FUMES. DO NOT SMOKE. DO NOT USE THESE MATERIALS NEAR A FLAME, SPARKS OR SOURCES OF HEAT. USE PROTECTIVE CLOTHING, GOGGLES AND GLOVES. IF YOU GET ONE OF THESE MATERIALS ON YOUR SKIN OR IN YOUR EYES, FLUSH IT AWAY WITH A FLOW OF CLEAN WATER. IF YOU GET ONE OF THESE MATERIALS IN YOUR MOUTH, GET IMMEDIATE MEDICAL AID. IN GENERAL, THESE MATERIALS ARE POISONOUS, FLAMMABLE AND SKIN IRRITANTS.**

CAUTION: **DO ALL THE WORK ON A CLEAN, SOFT SURFACE TO PREVENT DAMAGE TO THE COMPONENTS.**

SUB TASK 25-41-51-000-048-A01

D2549010403800 D2549010405200 D2549020409400 D2549020410400 D2549020411200 D2549020414200 D2549030413400 D2549030414600 D2549030700600 D2549030700800 D2549030704400 D2549030704600 D2549030705600

1. Removal of the Housing (49-1)

NOTE: **See TABLE 3663 for the references for the replacement procedure of permanent installed parts.**

More data for bonded parts are given in column SEE REPAIR TASK. Use the data for the selection of the related repair solution.

IPL FIG. ITEM	COMPONENT PART NAME	IPL FIG. ITEM	REPLACEMENT PART NAME	SEE REPAIR TASK
49-001 49-010	Housing Housing Assembly	49-020	Sliding Strip	Replacement of the Bonded Parts self adhesive
49-001 49-010	Housing Housing Assembly	49-030	Sliding Strip	Replacement of the Bonded Parts self adhesive
49-001	Housing	49-200	Section	Replacement of the Bonded Parts Material No. 08-026 Adhesive/ Sealant one Part, RTV Silicone Rubber

Table 3663
Reference list for the replacement of permanent installed parts

49-001	Housing	49-210	Sealing Section	Replacement of the Bonded Parts Material No. 08-026 Adhesive/ Sealant one Part, RTV Silicone Rubber
49-001	Housing	49-220	Placard	Replacement of the Self-adhesive Placards self adhesive
49-001	Housing	49-230	Placard	Replacement of the Self-adhesive Placards self adhesive

Table 3663
Reference list for the replacement of permanent installed parts

(b) Remove the screws 49-130, 49-140, 49-240, the washers 49-150, 49-160, 49-250 and the housing assembly 49-010 from the lavatory structure.

(c) Remove the stud 49-180 from the housing assembly 49-010.

(d) Remove the glass mirror 49-170 from the screws 49-190.

(e) Remove the screws 49-190 from the housing assembly 49-010.

(f) Remove the screws 49-270 and the decor covers 49-260 from the housing assembly 49-010.

(g) Remove the screws 49-060 and the fittings 49-050.

SUB TASK 25-41-51-000-048-B01
D2549010405000 D2549010405800 D2549010407000 D2549020411600 R225401627-004

2. Removal of the Housing (49-1)

NOTE: **See TABLE 3664 for the references for the replacement procedure of permanent installed parts.**

More data for bonded parts are given in column SEE REPAIR TASK. Use the data for the selection of the related repair solution.

IPL FIG. ITEM	COMPONENT PART NAME	IPL FIG. ITEM	REPLACEMENT PART NAME	SEE REPAIR TASK
49-001 49-010	Housing Housing Assembly	49-020	Sliding Strip	Replacement of the Bonded Parts self adhesive
49-001 49-010	Housing Housing Assembly	49-030	Sliding Strip	Replacement of the Bonded Parts self adhesive
49-001	Housing	49-200	Section	Replacement of the Bonded Parts Material No. 08-026 Adhesive/ Sealant one Part, RTV Silicone Rubber
49-001	Housing	49-210	Sealing Section	Replacement of the Bonded Parts Material No. 08-026 Adhesive/ Sealant one Part, RTV Silicone Rubber

Table 3664
Reference list for the replacement of permanent installed parts

49-001	Housing	49-220	Placard	Replacement of the Self-adhesive Placards self adhesive
49-001	Housing	49-230	Placard	Replacement of the Self-adhesive Placards self adhesive

Table 3664
Reference list for the replacement of permanent installed parts

(b) Remove the screws 49-130, 49-140, 49-240, the washers 49-150, 49-160, 49-250 and the housing assembly 49-010 from the lavatory structure.

(c) Remove the stud 49-180 from the housing assembly 49-010.

(d) Remove the glass mirror 49-170 from the screws 49-190.

(e) Remove the screws 49-190 from the housing assembly 49-010.

(f) Remove the screws 49-270 and the decor covers 49-310, 49-320 from the housing assembly 49-010.

(g) Remove the screws 49-060 and the fittings 49-050.

SUB TASK 25-41-51-000-048-C01
D2549010402400 D2549010406400

3. Removal of the Housing (49-1)

NOTE: **See TABLE 3665 for the references for the replacement procedure of permanent installed parts.**

More data for bonded parts are given in column SEE REPAIR TASK. Use the data for the selection of the related repair solution.

IPL FIG. ITEM	COMPONENT PART NAME	IPL FIG. ITEM	REPLACEMENT PART NAME	SEE REPAIR TASK
49-001 49-010	Housing Housing Assembly	49-020	Sliding Strip	Replacement of the Bonded Parts self adhesive
49-001 49-010	Housing Housing Assembly	49-030	Sliding Strip	Replacement of the Bonded Parts self adhesive
49-001	Housing	49-200	Section	Replacement of the Bonded Parts Material No. 08-026 Adhesive/ Sealant one Part, RTV Silicone Rubber
49-001	Housing	49-210	Sealing Section	Replacement of the Bonded Parts Material No. 08-026 Adhesive/ Sealant one Part, RTV Silicone Rubber
49-001	Housing	49-220	Placard	Replacement of the Self-adhesive Placards self adhesive
49-001	Housing	49-230	Placard	Replacement of the Self-adhesive Placards self adhesive

Table 3665
Reference list for the replacement of permanent installed parts

(b) Remove the screws 49-130, 49-140, 49-240, the washers 49-150, 49-160, 49-250 and the housing assembly 49-010 from the lavatory structure.

(c) Remove the stud 49-180 from the housing assembly 49-010.

(d) Remove the glass mirror 49-170 from the screws 49-190.

(e) Remove the screws 49-190 from the housing assembly 49-010.

(f) Remove the screws 49-270 and the decor covers 49-260 from the housing assembly 49-010.

(g) Remove the screws 49-290 and the perfume holder 49-280 from the housing assembly 49-010.

(h) Remove the screws 49-290 and the vase 49-300 from the housing assembly 49-010.

(i) Remove the screws 49-060 and the fittings 49-050.

TASK 25-41-51-000-824-C01
D2549010401600 D2549010405600 D2549020301600 D2549020411000 D2549020411400 D2549020411800 D2549020412000 D2549020412200 D2549020412400 D2549020413200 D2549020413600 D2549030701000 D2549030701600 D2549030701800 D2549030702000 D2549030702200 D2549030702400 D2549030703200 D2549030703400 D2549030704000 D2549040501400 R225401136-008 R225401136-014 R225401673-006 R225401691-002 R225401808-000 R225401814-000

234. Removal of the Housing

A. General

A complete disassembly of the component is not necessary and not recommended.

Do not disassemble the component more than it is necessary for:

- Cleaning
- Visual Inspection
- Replacement of defective parts.

B. Job Set-up Information
(1) Consumable Materials

REFERENCE	DESIGNATION
08-026	Adhesive/Sealant one Part, RTV Silicone Rubber

Table 3666
Consumable Materials

C. Procedure

WARNING: **BE CAREFUL WHEN YOU USE SOLVENTS/CLEANING AGENTS, SEALANTS AND OTHER MATERIALS. OBEY THE MATERIAL MANUFACTURER'S INSTRUCTIONS AND THE LOCAL REGULATIONS. MAKE SURE THAT THERE IS A GOOD FLOW OF AIR THROUGH THE WORK AREA. DO NOT BREATHE THE FUMES. DO NOT SMOKE. DO NOT USE THESE MATERIALS NEAR A FLAME, SPARKS OR SOURCES OF HEAT. USE PROTECTIVE CLOTHING, GOGGLES AND GLOVES. IF YOU GET ONE OF THESE MATERIALS ON YOUR SKIN OR IN YOUR EYES, FLUSH IT AWAY WITH A FLOW OF CLEAN WATER. IF YOU GET ONE OF THESE MATERIALS IN YOUR MOUTH, GET IMMEDIATE MEDICAL AID. IN GENERAL, THESE MATERIALS ARE POISONOUS, FLAMMABLE AND SKIN IRRITANTS.**

CAUTION: **DO ALL THE WORK ON A CLEAN, SOFT SURFACE TO PREVENT DAMAGE TO THE COMPONENTS.**

SUB TASK 25-41-51-010-118-A01

D2549010405600 D2549020301600 D2549020411800 D2549020412000 D2549020412200 D2549020412400 D2549020413600 D2549030701800 D2549030702200 D2549030703200 R225401136-008 R225401136-014 R225401808-000 R225401814-000

1. Removal of the Housing (49A-1)

NOTE: **See TABLE 3667 for the references for the replacement procedure of permanent installed parts.**

More data for bonded parts are given in column SEE REPAIR TASK. Use the data for the selection of the related repair solution.

IPL FIG. ITEM	COMPONENT PART NAME	IPL FIG. ITEM	REPLACEMENT PART NAME	SEE REPAIR TASK
49A-001 49A-010	Housing Housing Assembly	49A-020	Sliding Strip	Replacement of the Bonded Parts self adhesive
49A-001 49A-010	Housing Housing Assembly	49A-030	Sliding Strip	Replacement of the Bonded Parts self adhesive
49A-001	Housing	49A-200	Section	Replacement of the Bonded Parts Material No. 08-026 Adhesive/ Sealant one Part, RTV Silicone Rubber

Table 3667
Reference list for the replacement of permanent installed parts

49A-001	Housing	49A-210	Sealing Section	Replacement of the Bonded Parts Material No. 08-026 Adhesive/ Sealant one Part, RTV Silicone Rubber
49A-001	Housing	49A-220	Placard	Replacement of the Self-adhesive Placards self adhesive
49A-001	Housing	49A-230	Placard	Replacement of the Self-adhesive Placards self adhesive

Table 3667
Reference list for the replacement of permanent installed parts

(b) Remove the screws 49A-130, 49A-140, 49A-240, the washers 49A-150, 49A-160, 49A-250 and the housing assembly 49A-010 from the lavatory structure.

(c) Remove the stud 49A-180 from the housing assembly 49A-010.

(d) Remove the glass mirror 49A-170 from the screws 49A-190.

(e) Remove the screws 49A-190 from the housing assembly 49A-010.

(f) Remove the screws 49A-270 and the decor covers 49A-260 from the housing assembly 49A-010.

(g) Remove the screws 49A-060 and the fittings 49A-050.

SUB TASK 25-41-51-010-118-B01
D2549010401600 D2549020411000 D2549020411400 D2549020413200 D2549030701000 D2549030702400 D2549030703400 D2549040501400 R225401673-006 R225401691-002

2. Removal of the Housing (49A-1)

NOTE: **See TABLE 3668 for the references for the replacement procedure of permanent installed parts.**

More data for bonded parts are given in column SEE REPAIR TASK. Use the data for the selection of the related repair solution.

IPL FIG. ITEM	COMPONENT PART NAME	IPL FIG. ITEM	REPLACEMENT PART NAME	SEE REPAIR TASK
49A-001 49A-010	Housing Housing Assembly	49A-020	Sliding Strip	Replacement of the Bonded Parts self adhesive
49A-001 49A-010	Housing Housing Assembly	49A-030	Sliding Strip	Replacement of the Bonded Parts self adhesive
49A-001	Housing	49A-200	Section	Replacement of the Bonded Parts Material No. 08-026 Adhesive/ Sealant one Part, RTV Silicone Rubber
49A-001	Housing	49A-210	Sealing Section	Replacement of the Bonded Parts Material No. 08-026 Adhesive/ Sealant one Part, RTV Silicone Rubber

Table 3668
Reference list for the replacement of permanent installed parts

49A-001	Housing	49A-220	Placard	Replacement of the Self-adhesive Placards self adhesive
49A-001	Housing	49A-230	Placard	Replacement of the Self-adhesive Placards self adhesive

Table 3668
Reference list for the replacement of permanent installed parts

(b) Remove the screws 49A-130, 49A-140, 49A-240, the washers 49A-150, 49A-160, 49A-250 and the housing assembly 49A-010 from the lavatory structure.

(c) Remove the stud 49A-180 from the housing assembly 49A-010.

(d) Remove the glass mirror 49A-170 from the screws 49A-190.

(e) Remove the screws 49A-190 from the housing assembly 49A-010.

(f) Remove the screws 49A-270 and the decor covers 49A-280, 49A-290 from the housing assembly 49A-010.

(g) Remove the screws 49A-060 and the fittings 49A-050.

SUB TASK 25-41-51-010-118-C01
D2549030701600 D2549030704000

3. Removal of the Housing (49A-1)

NOTE: **See TABLE 3669 for the references for the replacement procedure of permanent installed parts.**

More data for bonded parts are given in column SEE REPAIR TASK. Use the data for the selection of the related repair solution.

IPL FIG. ITEM	COMPONENT PART NAME	IPL FIG. ITEM	REPLACEMENT PART NAME	SEE REPAIR TASK
49A-001 49A-010	Housing Housing Assembly	49A-020	Sliding Strip	TBD self adhesive
49A-001 49A-010	Housing Housing Assembly	49A-030	Sliding Strip	TBD self adhesive
49A-001	Housing	49A-175	Mirror Shading Foil	TBD self adhesive
49A-001	Housing	49A-200	Section	TBD Material No. 08-026 Adhesive/ Sealant one Part, RTV Silicone Rubber
49A-001	Housing	49A-210	Sealing Section	TBD Material No. 08-026 Adhesive/ Sealant one Part, RTV Silicone Rubber
49A-001	Housing	49A-220	Placard	TBD self adhesive
49A-001	Housing	49A-230	Placard	TBD self adhesive

Table 3669
Reference list for the replacement of permanent installed parts

(b) Remove the screws 49A-130, 49A-140, 49A-240, the washers 49A-150, 49A-160, 49A-250 and the housing assembly 49A-010 from the lavatory structure.

(c) Remove the stud 49A-180 from the housing assembly 49A-010.

(d) Remove the glass mirror 49A-170 from the screws 49A-190.

(e) Remove the screws 49A-190 from the housing assembly 49A-010.

(f) Remove the screws 49A-270 and the decor covers 49A-280, 49A-290 from the housing assembly 49A-010.

(g) Remove the screws 49A-060 and the fittings 49A-050.

SUB TASK 25-41-51-010-118-D01
D2549030702000

4. Removal of the Housing (49A-1)

NOTE: **See TABLE 3670 for the references for the replacement procedure of permanent installed parts.**

More data for bonded parts are given in column SEE REPAIR TASK. Use the data for the selection of the related repair solution.

IPL FIG. ITEM	COMPONENT PART NAME	IPL FIG. ITEM	REPLACEMENT PART NAME	SEE REPAIR TASK
49A-001 49A-010	Housing Housing Assembly	49A-020	Sliding Strip	TBD self adhesive
49A-001 49A-010	Housing Housing Assembly	49A-030	Sliding Strip	TBD self adhesive
49A-001	Housing	49A-200	Section	TBD Material No. 08-026 Adhesive/ Sealant one Part, RTV Silicone Rubber
49A-001	Housing	49A-210	Sealing Section	TBD

Table 3670
Reference list for the replacement of permanent installed parts

				Material No. 08-026 Adhesive/ Sealant one Part, RTV Silicone Rubber
49A-001	Housing	49A-220	Placard	TBD self adhesive
49A-001	Housing	49A-230	Placard	TBD self adhesive

Table 3670
Reference list for the replacement of permanent installed parts

(b) Remove the screws 49A-130, 49A-140, 49A-240, the washers 49A-150, 49A-160, 49A-250 and the housing assembly 49A-010 from the lavatory structure.

(c) Remove the stud 49A-180 from the housing assembly 49A-010.

(d) Remove the glass mirror 49A-170 from the screws 49A-190.

(e) Remove the screws 49A-190 from the housing assembly 49A-010.

(f) Remove the screws 49A-270 and the decor covers 49A-260 from the housing assembly 49A-010.

(g) Remove the screws 49A-310, the washers 49A-320 and the cosmetics holder 49A-300.

NOTE: For further instructions, see CMMV 25-20-08_C5307 (cosmetics holder).

(h) Remove the screws 49A-060 and the fittings 49A-050.

TASK 25-41-51-000-824-D01
D2549010402000 D2549010402800 D2549010504800 D2549010613600 D2549010613800 D2549020302800 D2549020410600 D2549020413400 D2549020413800 D2549020414000 D2549020414600 D2549020513200 D2549020707800 D2549020708800 D2549030702600 D2549030702800 D2549030703000 R225401196-024 R225401196-070

235. Removal of the Housing

A. General

A complete disassembly of the component is not necessary and not recommended.

Do not disassemble the component more than it is necessary for:

- Cleaning
- Visual Inspection
- Replacement of defective parts.

B. Job Set-up Information
(1) Consumable Materials

REFERENCE	DESIGNATION
08-026	Adhesive/Sealant one Part, RTV Silicone Rubber

Table 3671
Consumable Materials

C. Procedure

WARNING: **BE CAREFUL WHEN YOU USE SOLVENTS/CLEANING AGENTS, SEALANTS AND OTHER MATERIALS. OBEY THE MATERIAL MANUFACTURER'S INSTRUCTIONS AND THE LOCAL REGULATIONS. MAKE SURE THAT THERE IS A GOOD FLOW OF AIR THROUGH THE WORK AREA. DO NOT BREATHE THE FUMES. DO NOT SMOKE. DO NOT USE THESE MATERIALS NEAR A FLAME, SPARKS OR SOURCES OF HEAT. USE PROTECTIVE CLOTHING, GOGGLES AND GLOVES. IF YOU GET ONE OF THESE MATERIALS ON YOUR SKIN OR IN YOUR EYES, FLUSH IT AWAY WITH A FLOW OF CLEAN WATER. IF YOU GET ONE OF THESE MATERIALS IN YOUR MOUTH, GET IMMEDIATE MEDICAL AID. IN GENERAL, THESE MATERIALS ARE POISONOUS, FLAMMABLE AND SKIN IRRITANTS.**

CAUTION: **DO ALL THE WORK ON A CLEAN, SOFT SURFACE TO PREVENT DAMAGE TO THE COMPONENTS.**

SUB TASK 25-41-51-000-051-A01

D2549010402000 D2549010402800 D2549010504800 D2549010613600 D2549010613800 D2549020302800 D2549020410600 D2549020414600 D2549020513200 D2549020707800 D2549020708800 D2549030702800 D2549030703000 R225401196-024 R225401196-070

1. Removal of the Housing (49B-1)

NOTE: **See TABLE 3672 for the references for the replacement procedure of permanent installed parts.**

More data for bonded parts are given in column SEE REPAIR TASK/SPM REFERENCE. Use the data for the selection of the related repair solution.

IPL FIG. ITEM	COMPONENT PART NAME	IPL FIG. ITEM	REPLACEMENT PART NAME	SEE REPAIR TASK/ SPM REFERENCE
49B-001 49B-010	Housing Housing Assembly	49B-020	Sliding Strip	Replacement of the Bonded Parts self adhesive
49B-001 49B-010	Housing Housing Assembly	49B-030	Sliding Strip	Replacement of the Bonded Parts self adhesive
49B-001 49B-170	Housing Mirror Assembly	49B-173 49B-175 49B-177	Mirror Mirror Door Panel Adhesive Film	SPM 25-00-01
49B-001	Housing	49B-200	Section	Replacement of the Bonded Parts Material No. 08-026 Adhesive/

Table 3672
Reference list for the replacement of permanent installed parts

				Sealant one Part, RTV Silicone Rubber
49B-001	Housing	49B-210	Sealing Section	Replacement of the Bonded Parts Material No. 08-026 Adhesive/ Sealant one Part, RTV Silicone Rubber
49B-001	Housing	49B-220	Placard	Replacement of the Self-adhesive Placards self adhesive
49B-001	Housing	49B-230	Placard	Replacement of the Self-adhesive Placards self adhesive

Table 3672
Reference list for the replacement of permanent installed parts

(b) Remove the screws 49B-130, 49B-140, 49B-240, the washers 49B-150, 49B-160, 49B-250 and the housing assembly 49B-010 from the lavatory structure.

(c) Remove the stud 49B-180 from the housing assembly 49B-010.

(d) Remove the mirror assembly 49B-170 from the screws 49B-190.

(e) Remove the screws 49B-190 from the housing assembly 49B-010.

(f) Remove the screws 49B-270 and the decor covers 49B-290 from the housing assembly 49B-010.

(g) Remove the screws 49B-060 and the fittings 49B-050.

SUB TASK 25-41-51-000-051-B01
D2549020413400 D2549020414000 D2549030702600

2. Removal of the Housing (49B-1)

NOTE: **See TABLE 3673 for the references for the replacement procedure of permanent installed parts.**

More data for bonded parts are given in column SEE REPAIR TASK/SPM REFERENCE. Use the data for the selection of the related repair solution.

IPL FIG. ITEM	COMPONENT PART NAME	IPL FIG. ITEM	REPLACEMENT PART NAME	SEE REPAIR TASK/ SPM REFERENCE
49B-001 49B-010	Housing Housing Assembly	49B-020	Sliding Strip	Replacement of the Bonded Parts self adhesive
49B-001 49B-010	Housing Housing Assembly	49B-030	Sliding Strip	Replacement of the Bonded Parts self adhesive
49B-001 49B-170	Housing Mirror Assembly	49B-173 49B-175 49B-177	Mirror Mirror Door Panel Adhesive Film	SPM 25-00-01
49B-001	Housing	49B-200	Section	Replacement of the Bonded Parts Material No. 08-026 Adhesive/ Sealant one Part, RTV Silicone Rubber
49B-001	Housing	49B-210	Sealing Section	Replacement of the Bonded Parts Material No. 08-026 Adhesive/ Sealant one

Table 3673
Reference list for the replacement of permanent installed parts

				Part, RTV Silicone Rubber
49B-001	Housing	49B-220	Placard	Replacement of the Self-adhesive Placards self adhesive
49B-001	Housing	49B-230	Placard	Replacement of the Self-adhesive Placards self adhesive

Table 3673
Reference list for the replacement of permanent installed parts

(b) Remove the screws 49B-130, 49B-140, 49B-240, the washers 49B-150, 49B-160, 49B-250 and the housing assembly 49B-010 from the lavatory structure.

(c) Remove the stud 49B-180 from the housing assembly 49B-010.

(d) Remove the mirror assembly 49B-170 from the screws 49B-190.

(e) Remove the screws 49B-190 from the housing assembly 49B-010.

(f) Remove the screws 49B-270 and the decor covers 49B-260, 49B-280 from the housing assembly 49B-010.

(g) Remove the screws 49B-060 and the fittings 49B-050.

SUB TASK 25-41-51-000-051-C01
D2549020413800

3. Removal of the Housing (49B-1)

NOTE: **See TABLE 3674 for the references for the replacement procedure of permanent installed parts.**

More data for bonded parts are given in column SEE REPAIR TASK. Use the data for the selection of the related repair solution.

IPL FIG. ITEM	COMPONENT PART NAME	IPL FIG. ITEM	REPLACEMENT PART NAME	SEE REPAIR TASK
49B-001 49B-010	Housing Housing Assembly	49B-020	Sliding Strip	TBD self adhesive
49B-001 49B-010	Housing Housing Assembly	49B-030	Sliding Strip	TBD self adhesive
49B-001 49B-170	Housing Mirror Assembly	49B-173 49B-175 49B-177	Mirror Mirror Door Panel Adhesive Film	TBD
49B-001	Housing	49B-200	Section	TBD Material No. 08-026 Adhesive/ Sealant one Part, RTV Silicone Rubber
49B-001	Housing	49B-210	Sealing Section	TBD Material No. 08-026 Adhesive/ Sealant one Part, RTV Silicone Rubber
49B-001	Housing	49B-220	Placard	TBD self adhesive
49B-001	Housing	49B-230	Placard	TBD self adhesive
49B-001	Housing	49B-300	Placard	TBD self adhesive

Table 3674
Reference list for the replacement of permanent installed parts

(b) Remove the screws 49B-130, 49B-140, 49B-240, the washers 49B-150, 49B-160, 49B-250 and the housing assembly 49B-010 from the lavatory structure.

(c) Remove the stud 49B-180 from the housing assembly 49B-010.

(d) Remove the mirror assembly 49B-170 from the screws 49B-190.

(e) Remove the screws 49B-190 from the housing assembly 49B-010.

(f) Remove the screws 49B-270 and the decor covers 49B-260, 49B-280 from the housing assembly 49B-010.

(g) Remove the screws 49B-060 and the fittings 49B-050.

TASK 25-41-51-000-824-E01

D2547160900200 D2547160900400 D2547161903000 D2549010400000 D2549010400200
D2549010400400 D2549010400600 D2549010400800 D2549010401000 D2549010401400
D2549010401800 D2549010402200 D2549010402600 D2549010403000 D2549010403400
D2549010403600 D2549010404000 D2549010404200 D2549010404400 D2549010405400
D2549010406000 D2549010406200 D2549010406800 D2549010500400 D2549010500600
D2549010501000 D2549010501400 D2549010501600 D2549010501800 D2549010502000
D2549010502200 D2549010502400 D2549010502600 D2549010502800 D2549010503200
D2549010503400 D2549010503600 D2549010503800 D2549010504200 D2549010504400
D2549010504600 D2549010505000 D2549010505200 D2549010505400 D2549010505600
D2549010505800 D2549010506000 D2549010506200 D2549010506400 D2549010506800
D2549010507000 D2549010507200 D2549010507400 D2549010507600 D2549010507800
D2549010508000 D2549010508200 D2549010508400 D2549010508600 D2549010508800
D2549010509000 D2549010509200 D2549010509400 D2549010509600 D2549010509800
D2549010510000 D2549010510200 D2549010510400 D2549010510600 D2549010510800
D2549010511000 D2549010511200 D2549010511400 D2549010511600 D2549010511800
D2549010512000 D2549010512200 D2549010512400 D2549010512600 D2549010513000
D2549010513200 D2549010513400 D2549010513600 D2549010513800 D2549010514000
D2549010514200 D2549010514400 D2549010514600 D2549010514800 D2549010600000
D2549010600200 D2549010600400 D2549010600600 D2549010600800 D2549010601000
D2549010601200 D2549010601400 D2549010601600 D2549010601800 D2549010602000
D2549010602200 D2549010602400 D2549010602600 D2549010602800 D2549010603000
D2549010603200 D2549010603400 D2549010603600 D2549010603800 D2549010604000
D2549010604200 D2549010604400 D2549010604600 D2549010604800 D2549010605000
D2549010605200 D2549010605600 D2549010605800 D2549010606000 D2549010606200
D2549010606400 D2549010606600 D2549010606800 D2549010607000 D2549010607200
D2549010607400 D2549010607600 D2549010607800 D2549010608200 D2549010608400
D2549010608600 D2549010608800 D2549010609000 D2549010609200 D2549010609400
D2549010609600 D2549010609800 D2549010610000 D2549010610200 D2549010610400
D2549010610800 D2549010611000 D2549010611200 D2549010611400 D2549010611600
D2549010611800 D2549010612000 D2549010612200 D2549010612400 D2549010612600
D2549010613000 D2549010613200 D2549010613400 D2549010614200 D2549010614400
D2549010614600 D2549010614800 D2549020300000 D2549020300600 D2549020300800
D2549020301800 D2549020400000 D2549020400200 D2549020400400 D2549020400600
D2549020400800 D2549020401000 D2549020401200 D2549020402200 D2549020402600
D2549020403000 D2549020403200 D2549020403400 D2549020403600 D2549020403800
D2549020404000 D2549020404200 D2549020404400 D2549020404600 D2549020404800
D2549020405000 D2549020405200 D2549020405400 D2549020405600 D2549020405800
D2549020406000 D2549020406200 D2549020406400 D2549020406600 D2549020407000
D2549020407200 D2549020407400 D2549020407600 D2549020407800 D2549020408000
D2549020408600 D2549020409000 D2549020409600 D2549020409800 D2549020410200
D2549020410800 D2549020412600 D2549020414800 D2549020500000 D2549020500200
D2549020500400 D2549020500600 D2549020500800 D2549020501000 D2549020501200
D2549020501400 D2549020501600 D2549020501800 D2549020502000 D2549020502200
D2549020502400 D2549020502600 D2549020502800 D2549020503000 D2549020503200
D2549020503400 D2549020503600 D2549020503800 D2549020504000 D2549020504200
D2549020504400 D2549020504600 D2549020504800 D2549020505000 D2549020505200

D2549020505400 D2549020505600 D2549020505800 D2549020506000 D2549020506200
D2549020506400 D2549020506600 D2549020506800 D2549020507000 D2549020507200
D2549020507400 D2549020507600 D2549020507800 D2549020508000 D2549020508200
D2549020508400 D2549020508600 D2549020508800 D2549020509000 D2549020509200
D2549020509600 D2549020509800 D2549020510000 D2549020510400 D2549020510600
D2549020510800 D2549020511000 D2549020511200 D2549020511600 D2549020511800
D2549020512000 D2549020512200 D2549020512400 D2549020512600 D2549020512800
D2549020513000 D2549020513400 D2549020513600 D2549020513800 D2549020514000
D2549020514200 D2549020514400 D2549020514600 D2549020514800 D2549020600000
D2549020600200 D2549020600400 D2549020600800 D2549020601000 D2549020601400
D2549020601600 D2549020601800 D2549020602000 D2549020602200 D2549020602400
D2549020602600 D2549020602800 D2549020603000 D2549020603200 D2549020603400
D2549020603600 D2549020603800 D2549020604000 D2549020604200 D2549020604400
D2549020604600 D2549020604800 D2549020605000 D2549020605200 D2549020605400
D2549020605600 D2549020605800 D2549020606000 D2549020606400 D2549020606600
D2549020606800 D2549020607000 D2549020607200 D2549020607400 D2549020607600
D2549020607800 D2549020608200 D2549020608400 D2549020608600 D2549020608800
D2549020609000 D2549020609200 D2549020609400 D2549020609600 D2549020609800
D2549020610000 D2549020610200 D2549020610400 D2549020610600 D2549020610800
D2549020611000 D2549020611200 D2549020611400 D2549020611600 D2549020611800
D2549020612000 D2549020612200 D2549020612400 D2549020612600 D2549020612800
D2549020613000 D2549020613200 D2549020613600 D2549020613800 D2549020614000
D2549020614400 D2549020614600 D2549020614800 D2549020700000 D2549020700200
D2549020700400 D2549020700600 D2549020700800 D2549020701000 D2549020701200
D2549020701400 D2549020701600 D2549020701800 D2549020702000 D2549020702200
D2549020702400 D2549020702600 D2549020702800 D2549020703200 D2549020703400
D2549020703600 D2549020703800 D2549020704000 D2549020704200 D2549020704400
D2549020704600 D2549020704800 D2549020705000 D2549020705200 D2549020705400
D2549020705600 D2549020705800 D2549020706000 D2549020706200 D2549020706400
D2549020706600 D2549020706800 D2549020707000 D2549020707200 D2549020707400
D2549020707600 D2549020708000 D2549020708200 D2549020708400 D2549020708600
D2549020709000 D2549020709200 D2549020709400 D2549020709600 D2549020709800
D2549020710000 D2549020710200 D2549020710400 D2549020710600 D2549020710800
D2549020711000 D2549020711200 D2549020711400 D2549020711600 D2549020712000
D2549020712200 D2549020712400 D2549020712600 D2549020712800 D2549020713000
D2549020713200 D2549020713400 D2549020713600 D2549020713800 D2549020714000
D2549020714400 D2549020714600 D2549020800000 D2549020800200 D2549020800400
D2549020800600 D2549020800800 D2549020801000 D2549020801200 D2549020801400
D2549020801600 D2549020801800 D2549020802000 D2549020802200 D2549020802400
D2549020802600 D2549020802800 D2549020803000 D2549020803200 D2549020803400
D2549020803600 D2549020803800 D2549020804000 D2549020804200 D2549020804800
D2549020805000 D2549020805200 D2549020805400 D2549020805600 D2549020805800
D2549020806000 D2549020806200 D2549020806400 D2549020806600 D2549020806800
D2549020807000 D2549020807200 D2549020807400 D2549020807600 D2549020807800
D2549020808200 D2549020808400 D2549020808600 D2549020808800 D2549020809000
D2549020809400 D2549020809600 D2549020809800 D2549020810000 D2549020810200
D2549020810400 D2549020810600 D2549020810800 D2549020811200 D2549020811400

D2549020811600 D2549020811800 D2549020812000 D2549020812200 D2549020812400
D2549020812600 D2549020812800 D2549020813000 D2549020813200 D2549020813400
D2549020813600 D2549020813800 D2549020814000 D2549020814200 D2549020814400
D2549020814600 D2549020814800 D2549030400000 D2549030400200 D2549030400400
D2549030400600 D2549030401000 D2549030401200 D2549030401400 D2549030401600
D2549030401800 D2549030402000 D2549030402200 D2549030402400 D2549030402600
D2549030402800 D2549030403000 D2549030403400 D2549030403600 D2549030403800
D2549030404000 D2549030404200 D2549030404400 D2549030404600 D2549030404800
D2549030405000 D2549030405200 D2549030405400 D2549030405600 D2549030405800
D2549030406000 D2549030406400 D2549030406600 D2549030406800 D2549030407000
D2549030407200 D2549030407400 D2549030407600 D2549030407800 D2549030408000
D2549030408200 D2549030408400 D2549030408600 D2549030409000 D2549030409200
D2549030409400 D2549030409600 D2549030409800 D2549030410000 D2549030410200
D2549030410400 D2549030411200 D2549030411400 D2549030412000 D2549030412400
D2549030412600 D2549030412800 D2549030413000 D2549030413200 D2549030413600
D2549030414000 D2549030414400 D2549030500200 D2549030500400 D2549030500600
D2549030500800 D2549030501000 D2549030501200 D2549030501400 D2549030501600
D2549030501800 D2549030502000 D2549030502200 D2549030502400 D2549030502600
D2549030502800 D2549030503000 D2549030503200 D2549030503400 D2549030503600
D2549030503800 D2549030504000 D2549030504200 D2549030504600 D2549030504800
D2549030505200 D2549030505400 D2549030505600 D2549030505800 D2549030506000
D2549030506200 D2549030506400 D2549030506600 D2549030506800 D2549030507000
D2549030507200 D2549030507400 D2549030507600 D2549030507800 D2549030508000
D2549030508200 D2549030508400 D2549030508600 D2549030508800 D2549030509000
D2549030509200 D2549030509400 D2549030509600 D2549030509800 D2549030510000
D2549030510200 D2549030510400 D2549030510600 D2549030510800 D2549030511000
D2549030511200 D2549030511400 D2549030511600 D2549030511800 D2549030512000
D2549030512200 D2549030512400 D2549030512800 D2549030513000 D2549030513200
D2549030513400 D2549030513600 D2549030513800 D2549030514000 D2549030514200
D2549030514400 D2549030514600 D2549030514800 D2549030600000 D2549030600200
D2549030600400 D2549030600600 D2549030600800 D2549030601000 D2549030601200
D2549030601400 D2549030601600 D2549030601800 D2549030602000 D2549030602200
D2549030602400 D2549030602600 D2549030602800 D2549030603000 D2549030603200
D2549030603400 D2549030603600 D2549030603800 D2549030604200 D2549030604400
D2549030604600 D2549030604800 D2549030605000 D2549030605200 D2549030605400
D2549030605600 D2549030605800 D2549030606000 D2549030606200 D2549030606400
D2549030606600 D2549030606800 D2549030607000 D2549030607200 D2549030607400
D2549030607600 D2549030607800 D2549030608000 D2549030608200 D2549030608400
D2549030608600 D2549030608800 D2549030609000 D2549030609200 D2549030609800
D2549030610000 D2549030610200 D2549030610400 D2549030610600 D2549030611000
D2549030611200 D2549030611400 D2549030611600 D2549030611800 D2549030612000
D2549030612200 D2549030612400 D2549030612600 D2549030612800 D2549030613200
D2549030613400 D2549030613600 D2549030613800 D2549030614000 D2549030614200
D2549030614400 D2549030614600 D2549030614800 D2549030700000 D2549030700200
D2549030700400 D2549030701200 D2549030701400 D2549030703800 D2549030704800
D2549030705200 D2549040500200 D2549040500400 D2549040500600 D2549040500800
D2549040501000 D2549040501200 D2549040501600 D2549040501800 D2549040502000

R225401107-000 R225401107-002 R225401107-004 R225401115-000 R225401115-002
R225401128-000 R225401133-000 R225401134-000 R225401134-002 R225401134-004
R225401134-006 R225401134-008 R225401134-010 R225401134-012 R225401134-014
R225401134-016 R225401134-018 R225401134-020 R225401134-022 R225401134-024
R225401134-026 R225401134-028 R225401134-030 R225401134-032 R225401134-034
R225401134-036 R225401134-038 R225401136-000 R225401136-004 R225401136-006
R225401136-010 R225401136-012 R225401136-016 R225401136-018 R225401136-020
R225401136-022 R225401136-024 R225401137-000 R225401137-002 R225401137-004
R225401137-006 R225401137-008 R225401137-010 R225401137-012 R225401137-014
R225401137-016 R225401139-000 R225401142-000 R225401142-002 R225401145-000
R225401145-002 R225401145-004 R225401145-006 R225401145-008 R225401145-010
R225401145-012 R225401145-014 R225401146-000 R225401146-002 R225401152-000
R225401152-002 R225401152-004 R225401152-006 R225401152-008 R225401152-010
R225401153-000 R225401159-000 R225401160-000 R225401160-002 R225401168-000
R225401168-002 R225401168-004 R225401168-006 R225401168-008 R225401168-010
R225401168-012 R225401168-014 R225401168-016 R225401168-018 R225401168-020
R225401168-022 R225401168-024 R225401168-026 R225401168-028 R225401172-000
R225401172-002 R225401172-004 R225401172-006 R225401172-008 R225401172-010
R225401172-012 R225401172-014 R225401172-016 R225401172-018 R225401175-000
R225401175-002 R225401176-000 R225401183-000 R225401183-002 R225401183-008
R225401188-000 R225401188-002 R225401188-004 R225401188-006 R225401192-000
R225401192-002 R225401195-000 R225401196-000 R225401196-002 R225401196-004
R225401196-006 R225401196-008 R225401196-010 R225401196-012 R225401196-014
R225401196-016 R225401196-018 R225401196-020 R225401196-022 R225401196-034
R225401196-036 R225401196-038 R225401196-040 R225401196-042 R225401196-044
R225401196-046 R225401196-048 R225401196-050 R225401196-052 R225401196-054
R225401196-056 R225401196-058 R225401196-060 R225401196-062 R225401196-064
R225401196-066 R225401196-068 R225401199-000 R225401199-002 R225401199-004
R225401199-006 R225401199-008 R225401199-010 R225401199-012 R225401600-000
R225401600-002 R225401600-004 R225401603-000 R225401605-000 R225401605-002
R225401609-000 R225401611-000 R225401611-006 R225401611-008 R225401611-010
R225401611-012 R225401611-014 R225401611-016 R225401611-018 R225401611-020
R225401613-000 R225401614-000 R225401618-000 R225401618-002 R225401619-000
R225401619-002 R225401622-000 R225401622-002 R225401625-000 R225401629-000
R225401629-002 R225401639-000 R225401639-002 R225401643-000 R225401643-002
R225401643-004 R225401643-006 R225401643-008 R225401646-000 R225401647-000
R225401648-000 R225401648-002 R225401648-004 R225401648-006 R225401648-008
R225401649-000 R225401656-000 R225401656-002 R225401658-000 R225401662-000
R225401662-002 R225401671-000 R225401671-002 R225401673-000 R225401673-002
R225401673-004 R225401675-000 R225401676-000 R225401683-000 R225401688-000
R225401689-004 R225401689-006 R225401691-000 R225401693-000 R225401697-000
R225401697-002 R225401803-000 R225401803-002

236. Removal of the Housing

A. General

A complete disassembly of the component is not necessary and not recommended.

Do not disassemble the component more than it is necessary for:

- Cleaning
- Visual Inspection
- Replacement of defective parts.

B. Job Set-up Information
(1) Consumable Materials

REFERENCE	DESIGNATION
08-026	Adhesive/Sealant one Part, RTV Silicone Rubber

Table 3675
Consumable Materials

C. Procedure

WARNING: **BE CAREFUL WHEN YOU USE SOLVENTS/CLEANING AGENTS, SEALANTS AND OTHER MATERIALS. OBEY THE MATERIAL MANUFACTURER'S INSTRUCTIONS AND THE LOCAL REGULATIONS. MAKE SURE THAT THERE IS A GOOD FLOW OF AIR THROUGH THE WORK AREA. DO NOT BREATHE THE FUMES. DO NOT SMOKE. DO NOT USE THESE MATERIALS NEAR A FLAME, SPARKS OR SOURCES OF HEAT. USE PROTECTIVE CLOTHING, GOGGLES AND GLOVES. IF YOU GET ONE OF THESE MATERIALS ON YOUR SKIN OR IN YOUR EYES, FLUSH IT AWAY WITH A FLOW OF CLEAN WATER. IF YOU GET ONE OF THESE MATERIALS IN YOUR MOUTH, GET IMMEDIATE MEDICAL AID. IN GENERAL, THESE MATERIALS ARE POISONOUS, FLAMMABLE AND SKIN IRRITANTS.**

CAUTION: **DO ALL THE WORK ON A CLEAN, SOFT SURFACE TO PREVENT DAMAGE TO THE COMPONENTS.**

SUB TASK 25-41-51-000-052-A01
D2549010610000 D2549020407600 D2549020408000 D2549020410200 D2549020603200 D2549020606000 D2549020608800 D2549020706400 D2549020800000 R225401683-000

1. Removal of the Housing (49C-1)

NOTE: **See TABLE 3676 for the references for the replacement procedure of permanent installed parts.**

More data for bonded parts are given in column SEE REPAIR TASK. Use the data for the selection of the related repair solution.

IPL FIG. ITEM	COMPONENT PART NAME	IPL FIG. ITEM	REPLACEMENT PART NAME	SEE REPAIR TASK
49C-001 49C-010	Housing Housing Assembly	49C-020	Sliding Strip	Replacement of the Bonded Parts self adhesive
49C-001 49C-010	Housing Housing Assembly	49C-030	Sliding Strip	Replacement of the Bonded Parts self adhesive
49C-001	Housing	49C-200	Section	Replacement of the Bonded Parts Material No. 08-026 Adhesive/ Sealant one Part, RTV Silicone Rubber
49C-001	Housing	49C-210	Sealing Section	Replacement of the Bonded Parts Material No. 08-026 Adhesive/ Sealant one Part, RTV Silicone Rubber

Table 3676
Reference list for the replacement of permanent installed parts

49C-001	Housing	49C-220	Placard	Replacement of the Self-adhesive Placards self adhesive
49C-001	Housing	49C-230	Placard	Replacement of the Self-adhesive Placards self adhesive

Table 3676
Reference list for the replacement of permanent installed parts

(b) Remove the upper fitting assembly 49C-125 as follows:

1 Remove the screws 49C-130, 49C-240, the washers 49C-150, 49C-250 and the upper fitting 49C-127 from the housing assembly 49C-010.

(c) Remove the screws 49C-140, the washers 49C-160 and the housing assembly 49C-010 from the lavatory structure.

(d) Remove the stud 49C-180 from the housing assembly 49C-010.

(e) Remove the glass mirror 49C-170 from the screws 49C-190.

(f) Remove the screws 49C-190 from the housing assembly 49C-010.

(g) Remove the screws 49C-270 and the decor covers 49C-260, 49C-280 from the housing assembly 49C-010.

(h) Remove the screws 49C-060 and the fittings 49C-050.

(i) Remove the protective film 49C-330 and the label 49C-320.

SUB TASK 25-41-51-000-052-B01
D2549030610200 D2549030701200

2. Removal of the Housing (49C-1)

NOTE: See TABLE 3677 for the references for the replacement procedure of permanent installed parts.

More data for bonded parts are given in column SEE REPAIR TASK. Use the data for the selection of the related repair solution.

IPL FIG. ITEM	COMPONENT PART NAME	IPL FIG. ITEM	REPLACEMENT PART NAME	SEE REPAIR TASK
49C-001 49C-010	Housing Housing Assembly	49C-020	Sliding Strip	Replacement of the Bonded Parts self adhesive
49C-001 49C-010	Housing Housing Assembly	49C-030	Sliding Strip	Replacement of the Bonded Parts self adhesive
49C-001	Housing	49C-200	Section	Replacement of the Bonded Parts Material No. 08-026 Adhesive/ Sealant one Part, RTV Silicone Rubber
49C-001	Housing	49C-210	Sealing Section	Replacement of the Bonded Parts Material No. 08-026 Adhesive/ Sealant one Part, RTV Silicone Rubber
49C-001	Housing	49C-220	Placard	Replacement of the Self-adhesive Placards self adhesive

Table 3677
Reference list for the replacement of permanent installed parts

49C-001	Housing	49C-230	Placard	Replacement of the Self-adhesive Placards self adhesive
49C-001	Housing	49C-290	Placard	Replacement of the Self-adhesive Placards self adhesive

Table 3677
Reference list for the replacement of permanent installed parts

(b) Remove the upper fitting assembly 49C-125 as follows:

1 Remove the screws 49C-130, 49C-240, the washers 49C-150, 49C-250 and the upper fitting 49C-127 from the housing assembly 49C-010.

(c) Remove the screws 49C-140, the washers 49C-160 and the housing assembly 49C-010 from the lavatory structure.

(d) Remove the stud 49C-180 from the housing assembly 49C-010.

(e) Remove the glass mirror 49C-170 from the screws 49C-190.

(f) Remove the screws 49C-190 from the housing assembly 49C-010.

(g) Remove the screws 49C-270 and the decor covers 49C-260, 49C-280 from the housing assembly 49C-010.

(h) Remove the screws 49C-060 and the fittings 49C-050.

SUB TASK 25-41-51-000-052-C01

D2547160900200 D2547160900400 D2547161903000 D2549010400000
D2549010400200 D2549010400400 D2549010400600 D2549010400800
D2549010401000 D2549010401400 D2549010401800 D2549010402200
D2549010402600 D2549010403000 D2549010403400 D2549010403600
D2549010404000 D2549010404200 D2549010404400 D2549010405400
D2549010406000 D2549010406200 D2549010406800 D2549010500400
D2549010500600 D2549010501000 D2549010501400 D2549010501600
D2549010501800 D2549010502000 D2549010502200 D2549010502400
D2549010502600 D2549010502800 D2549010503200 D2549010503400
D2549010503600 D2549010503800 D2549010504200 D2549010504400
D2549010504600 D2549010505000 D2549010505200 D2549010505400
D2549010505600 D2549010505800 D2549010506000 D2549010506200

D2549010506400 D2549010506800 D2549010507000 D2549010507200
D2549010507400 D2549010507600 D2549010507800 D2549010508000
D2549010508200 D2549010508400 D2549010508600 D2549010508800
D2549010509000 D2549010509200 D2549010509400 D2549010509600
D2549010509800 D2549010510000 D2549010510200 D2549010510400
D2549010510600 D2549010510800 D2549010511000 D2549010511200
D2549010511400 D2549010511600 D2549010511800 D2549010512000
D2549010512200 D2549010512400 D2549010512600 D2549010513000
D2549010513200 D2549010513400 D2549010513600 D2549010513800
D2549010514000 D2549010514200 D2549010514400 D2549010514600
D2549010514800 D2549010600000 D2549010600200 D2549010600400
D2549010600600 D2549010600800 D2549010601000 D2549010601200
D2549010601400 D2549010601600 D2549010601800 D2549010602000
D2549010602200 D2549010602400 D2549010602600 D2549010602800
D2549010603000 D2549010603200 D2549010603400 D2549010603600
D2549010603800 D2549010604000 D2549010604200 D2549010604400
D2549010604600 D2549010604800 D2549010605000 D2549010605200
D2549010605600 D2549010605800 D2549010606000 D2549010606200
D2549010606400 D2549010606600 D2549010606800 D2549010607000
D2549010607200 D2549010607400 D2549010607600 D2549010607800
D2549010608200 D2549010608400 D2549010608600 D2549010608800
D2549010609000 D2549010609200 D2549010609400 D2549010609600
D2549010609800 D2549010610200 D2549010610400 D2549010610800
D2549010611000 D2549010611200 D2549010611400 D2549010611600
D2549010611800 D2549010612000 D2549010612200 D2549010612400
D2549010612600 D2549010613000 D2549010613200 D2549010613400
D2549010614200 D2549010614400 D2549010614600 D2549010614800
D2549020300000 D2549020300600 D2549020300800 D2549020301800
D2549020400000 D2549020400200 D2549020400400 D2549020400600
D2549020400800 D2549020401000 D2549020401200 D2549020402200
D2549020402600 D2549020403000 D2549020403200 D2549020403400
D2549020403600 D2549020403800 D2549020404000 D2549020404200
D2549020404400 D2549020404600 D2549020404800 D2549020405000
D2549020405200 D2549020405400 D2549020405600 D2549020405800
D2549020406000 D2549020406200 D2549020406400 D2549020406600
D2549020407000 D2549020407200 D2549020407400 D2549020407800
D2549020408600 D2549020409000 D2549020409600 D2549020409800
D2549020410800 D2549020412600 D2549020414800 D2549020500000
D2549020500200 D2549020500400 D2549020500600 D2549020500800
D2549020501000 D2549020501200 D2549020501400 D2549020501600
D2549020501800 D2549020502000 D2549020502200 D2549020502400
D2549020502600 D2549020502800 D2549020503000 D2549020503200
D2549020503400 D2549020503600 D2549020503800 D2549020504000
D2549020504200 D2549020504400 D2549020504600 D2549020504800
D2549020505000 D2549020505200 D2549020505400 D2549020505600
D2549020505800 D2549020506000 D2549020506200 D2549020506400
D2549020506600 D2549020506800 D2549020507000 D2549020507200

D2549020507400 D2549020507600 D2549020507800 D2549020508000
D2549020508200 D2549020508400 D2549020508600 D2549020508800
D2549020509000 D2549020509200 D2549020509600 D2549020509800
D2549020510000 D2549020510400 D2549020510600 D2549020510800
D2549020511000 D2549020511200 D2549020511600 D2549020511800
D2549020512000 D2549020512200 D2549020512400 D2549020512600
D2549020512800 D2549020513000 D2549020513400 D2549020513600
D2549020513800 D2549020514000 D2549020514200 D2549020514400
D2549020514600 D2549020514800 D2549020600000 D2549020600200
D2549020600400 D2549020600800 D2549020601000 D2549020601400
D2549020601600 D2549020601800 D2549020602000 D2549020602200
D2549020602400 D2549020602600 D2549020602800 D2549020603000
D2549020603400 D2549020603600 D2549020603800 D2549020604000
D2549020604200 D2549020604400 D2549020604600 D2549020604800
D2549020605000 D2549020605200 D2549020605400 D2549020605600
D2549020605800 D2549020606400 D2549020606600 D2549020606800
D2549020607000 D2549020607200 D2549020607400 D2549020607600
D2549020607800 D2549020608200 D2549020608400 D2549020608600
D2549020609000 D2549020609200 D2549020609400 D2549020609600
D2549020609800 D2549020610000 D2549020610200 D2549020610400
D2549020610600 D2549020610800 D2549020611000 D2549020611200
D2549020611400 D2549020611600 D2549020611800 D2549020612000
D2549020612200 D2549020612400 D2549020612600 D2549020612800
D2549020613000 D2549020613200 D2549020613600 D2549020613800
D2549020614000 D2549020614400 D2549020614600 D2549020614800
D2549020700000 D2549020700200 D2549020700400 D2549020700600
D2549020700800 D2549020701000 D2549020701200 D2549020701400
D2549020701600 D2549020701800 D2549020702000 D2549020702200
D2549020702400 D2549020702600 D2549020702800 D2549020703200
D2549020703400 D2549020703600 D2549020703800 D2549020704000
D2549020704200 D2549020704400 D2549020704600 D2549020704800
D2549020705000 D2549020705200 D2549020705400 D2549020705600
D2549020705800 D2549020706000 D2549020706200 D2549020706600
D2549020706800 D2549020707000 D2549020707200 D2549020707400
D2549020707600 D2549020708000 D2549020708200 D2549020708400
D2549020708600 D2549020709000 D2549020709200 D2549020709400
D2549020709600 D2549020709800 D2549020710000 D2549020710200
D2549020710400 D2549020710600 D2549020710800 D2549020711000
D2549020711200 D2549020711400 D2549020711600 D2549020712000
D2549020712200 D2549020712400 D2549020712600 D2549020712800
D2549020713000 D2549020713200 D2549020713400 D2549020713600
D2549020713800 D2549020714000 D2549020714400 D2549020714600
D2549020800200 D2549020800400 D2549020800600 D2549020800800
D2549020801000 D2549020801200 D2549020801400 D2549020801600
D2549020801800 D2549020802000 D2549020802200 D2549020802400
D2549020802600 D2549020802800 D2549020803000 D2549020803200
D2549020803400 D2549020803600 D2549020803800 D2549020804000

D2549020804200 D2549020804800 D2549020805000 D2549020805200
D2549020805400 D2549020805600 D2549020805800 D2549020806000
D2549020806200 D2549020806400 D2549020806600 D2549020806800
D2549020807000 D2549020807200 D2549020807400 D2549020807600
D2549020807800 D2549020808200 D2549020808400 D2549020808600
D2549020808800 D2549020809000 D2549020809400 D2549020809600
D2549020809800 D2549020810000 D2549020810200 D2549020810400
D2549020810600 D2549020810800 D2549020811200 D2549020811400
D2549020811600 D2549020811800 D2549020812000 D2549020812200
D2549020812400 D2549020812600 D2549020812800 D2549020813000
D2549020813200 D2549020813400 D2549020813600 D2549020813800
D2549020814000 D2549020814200 D2549020814400 D2549020814600
D2549020814800 D2549030400000 D2549030400200 D2549030400400
D2549030400600 D2549030401000 D2549030401200 D2549030401400
D2549030401600 D2549030401800 D2549030402000 D2549030402200
D2549030402400 D2549030402600 D2549030402800 D2549030403000
D2549030403400 D2549030403600 D2549030403800 D2549030404000
D2549030404200 D2549030404400 D2549030404600 D2549030404800
D2549030405000 D2549030405200 D2549030405400 D2549030405600
D2549030405800 D2549030406000 D2549030406400 D2549030406600
D2549030406800 D2549030407000 D2549030407200 D2549030407400
D2549030407600 D2549030407800 D2549030408000 D2549030408200
D2549030408400 D2549030408600 D2549030409000 D2549030409200
D2549030409400 D2549030409600 D2549030409800 D2549030410000
D2549030410200 D2549030410400 D2549030411200 D2549030411400
D2549030412000 D2549030412400 D2549030412600 D2549030412800
D2549030413000 D2549030413200 D2549030413600 D2549030414000
D2549030414400 D2549030500200 D2549030500400 D2549030500600
D2549030500800 D2549030501000 D2549030501200 D2549030501400
D2549030501600 D2549030501800 D2549030502000 D2549030502200
D2549030502400 D2549030502600 D2549030502800 D2549030503000
D2549030503200 D2549030503400 D2549030503600 D2549030503800
D2549030504000 D2549030504200 D2549030504600 D2549030504800
D2549030505200 D2549030505400 D2549030505600 D2549030505800
D2549030506000 D2549030506200 D2549030506400 D2549030506600
D2549030506800 D2549030507000 D2549030507200 D2549030507400
D2549030507600 D2549030507800 D2549030508000 D2549030508200
D2549030508400 D2549030508600 D2549030508800 D2549030509000
D2549030509200 D2549030509400 D2549030509600 D2549030509800
D2549030510000 D2549030510200 D2549030510400 D2549030510600
D2549030510800 D2549030511000 D2549030511200 D2549030511400
D2549030511600 D2549030511800 D2549030512000 D2549030512200
D2549030512400 D2549030512800 D2549030513000 D2549030513200
D2549030513400 D2549030513600 D2549030513800 D2549030514000
D2549030514200 D2549030514400 D2549030514600 D2549030514800
D2549030600000 D2549030600200 D2549030600400 D2549030600600
D2549030600800 D2549030601000 D2549030601200 D2549030601400

D2549030601600 D2549030601800 D2549030602000 D2549030602200
D2549030602400 D2549030602600 D2549030602800 D2549030603000
D2549030603200 D2549030603400 D2549030603600 D2549030603800
D2549030604200 D2549030604400 D2549030604600 D2549030604800
D2549030605000 D2549030605200 D2549030605400 D2549030605600
D2549030605800 D2549030606000 D2549030606200 D2549030606400
D2549030606600 D2549030606800 D2549030607000 D2549030607200
D2549030607400 D2549030607600 D2549030607800 D2549030608000
D2549030608200 D2549030608400 D2549030608600 D2549030608800
D2549030609000 D2549030609200 D2549030609800 D2549030610000
D2549030610400 D2549030610600 D2549030611000 D2549030611200
D2549030611400 D2549030611600 D2549030611800 D2549030612000
D2549030612200 D2549030612400 D2549030612600 D2549030612800
D2549030613200 D2549030613400 D2549030613600 D2549030613800
D2549030614000 D2549030614200 D2549030614400 D2549030614600
D2549030614800 D2549030700000 D2549030700200 D2549030700400
D2549030701400 D2549030703800 D2549030704800 D2549030705200
D2549040500200 D2549040500400 D2549040500600 D2549040500800
D2549040501000 D2549040501200 D2549040501600 D2549040501800
D2549040502000 R225401107-000 R225401107-002 R225401107-004 R225401115-000
R225401115-002 R225401128-000 R225401133-000 R225401134-000 R225401134-002
R225401134-004 R225401134-006 R225401134-008 R225401134-010 R225401134-012
R225401134-014 R225401134-016 R225401134-018 R225401134-020 R225401134-022
R225401134-024 R225401134-026 R225401134-028 R225401134-030 R225401134-032
R225401134-034 R225401134-036 R225401134-038 R225401136-000 R225401136-004
R225401136-006 R225401136-010 R225401136-012 R225401136-016 R225401136-018
R225401136-020 R225401136-022 R225401136-024 R225401137-000 R225401137-002
R225401137-004 R225401137-006 R225401137-008 R225401137-010 R225401137-012
R225401137-014 R225401137-016 R225401139-000 R225401142-000 R225401142-002
R225401145-000 R225401145-002 R225401145-004 R225401145-006 R225401145-008
R225401145-010 R225401145-012 R225401145-014 R225401146-000 R225401146-002
R225401152-000 R225401152-002 R225401152-004 R225401152-006 R225401152-008
R225401152-010 R225401153-000 R225401159-000 R225401160-000 R225401160-002
R225401168-000 R225401168-002 R225401168-004 R225401168-006 R225401168-008
R225401168-010 R225401168-012 R225401168-014 R225401168-016 R225401168-018
R225401168-020 R225401168-022 R225401168-024 R225401168-026 R225401168-028
R225401172-000 R225401172-002 R225401172-004 R225401172-006 R225401172-008
R225401172-010 R225401172-012 R225401172-014 R225401172-016 R225401172-018
R225401175-000 R225401175-002 R225401176-000 R225401183-000 R225401183-002
R225401183-008 R225401188-000 R225401188-002 R225401188-004 R225401188-006
R225401192-000 R225401192-002 R225401195-000 R225401196-000 R225401196-002
R225401196-004 R225401196-006 R225401196-008 R225401196-010 R225401196-012
R225401196-014 R225401196-016 R225401196-018 R225401196-020 R225401196-022
R225401196-034 R225401196-036 R225401196-038 R225401196-040 R225401196-042
R225401196-044 R225401196-046 R225401196-048 R225401196-050 R225401196-052
R225401196-054 R225401196-056 R225401196-058 R225401196-060 R225401196-062
R225401196-064 R225401196-066 R225401196-068 R225401199-000 R225401199-002

R225401199-004 R225401199-006 R225401199-008 R225401199-010 R225401199-012 R225401600-000 R225401600-002 R225401600-004 R225401603-000 R225401605-000 R225401605-002 R225401609-000 R225401611-000 R225401611-006 R225401611-008 R225401611-010 R225401611-012 R225401611-014 R225401611-016 R225401611-018 R225401611-020 R225401613-000 R225401614-000 R225401618-000 R225401618-002 R225401619-000 R225401619-002 R225401622-000 R225401622-002 R225401625-000 R225401629-000 R225401629-002 R225401639-000 R225401639-002 R225401643-000 R225401643-002 R225401643-004 R225401643-006 R225401643-008 R225401646-000 R225401647-000 R225401648-000 R225401648-002 R225401648-004 R225401648-006 R225401648-008 R225401649-000 R225401656-000 R225401656-002 R225401658-000 R225401662-000 R225401662-002 R225401671-000 R225401671-002 R225401673-000 R225401673-002 R225401673-004 R225401675-000 R225401676-000 R225401688-000 R225401689-004 R225401689-006 R225401691-000 R225401693-000 R225401697-000 R225401697-002 R225401803-000 R225401803-002

3. Removal of the Housing

   (a) Not applicable.

TASK 25-41-51-000-825-A01

D2549010402000 D2549010611000 D2549010612200 D2549010613800 D2549010614200 D2549010614800 D2549020400400 D2549020404200 D2549020405400 D2549020405600 D2549020713000 D2549020714000 D2549020802400 D2549020804000 D2549020804200 D2549020805600 D2549020806200 D2549020806400 D2549020806600 D2549020807000 D2549020807600 D2549020807800 D2549020808400 D2549020808800 D2549020809000 D2549020810000 D2549020810400 D2549020810600 D2549020811400 D2549020812200 D2549020814000 D2549020814400 D2549030401400 D2549030401600 D2549030403000 D2549030404200 D2549030405000 D2549030405600 D2549030405800 D2549030407000 D2549030407400 D2549030407600 R225401192-002 R225401199-000 R225401199-008 R225401199-010 R225401609-000 R225401611-006 R225401611-012 R225401639-000 R225401639-002 R225401643-000 R225401643-002 R225401643-004 R225401646-000 R225401647-000 R225401656-000 R225401656-002

237. Removal of the Side Wall

A. General

A complete disassembly of the component is not necessary and not recommended.

Do not disassemble the component more than it is necessary for:

- Cleaning
- Visual Inspection
- Replacement of defective parts.

B. Job Set-up Information

(1) Consumable Materials

REFERENCE	DESIGNATION
08-017A	Adhesive Structuralflexible

Table 3678
Consumable Materials

C. Procedure

WARNING: **BE CAREFUL WHEN YOU USE SOLVENTS/CLEANING AGENTS, SEALANTS AND OTHER MATERIALS. OBEY THE MATERIAL MANUFACTURER'S INSTRUCTIONS AND THE LOCAL REGULATIONS. MAKE SURE THAT THERE IS A GOOD FLOW OF AIR THROUGH THE WORK AREA. DO NOT BREATHE THE FUMES. DO NOT SMOKE. DO NOT USE THESE MATERIALS NEAR A FLAME, SPARKS OR SOURCES OF HEAT. USE PROTECTIVE CLOTHING, GOGGLES AND GLOVES. IF YOU GET ONE OF THESE MATERIALS ON YOUR SKIN OR IN YOUR EYES, FLUSH IT AWAY WITH A FLOW OF CLEAN WATER. IF YOU GET ONE OF THESE MATERIALS IN YOUR MOUTH, GET IMMEDIATE MEDICAL AID. IN GENERAL, THESE MATERIALS ARE POISONOUS, FLAMMABLE AND SKIN IRRITANTS.**

WARNING: **KEEP ALL HYDROCARBONS (FUELS, LUBRICANTS, ETC.) AWAY FROM ALL SOURCES OF OXYGEN. OXYGEN BECOMES EXPLOSIVE WHEN IT TOUCHES HYDROCARBONS.**

WARNING: **TO PREVENT CONTAMINATION OF THE OXYGEN SYSTEM, MAKE SURE THAT YOUR HANDS AND ALL THE TOOLS ARE CLEAN.**

CAUTION: **PUT DRY, CLEAN, METAL OR PLASTIC PLUGS ON ALL PIPES OR UNITS REMOVED TEMPORARILY. PUT EACH PIPE OR UNIT IN A SEALED VINYL BAG. UNWANTED MATERIALS IN THE OXYGEN SYSTEM CAN DAMAGE THE SYSTEM.**

CAUTION: **DO ALL THE WORK ON A CLEAN, SOFT SURFACE TO PREVENT DAMAGE TO THE COMPONENTS.**

SUB TASK 25-41-51-010-105-A01
D2549020405400 D2549020713000 D2549020802400 D2549020806400
D2549020806600 D2549020809000 R225401639-000 R225401639-002

1. Removal of the Side Wall (06Z-1)

NOTE: **See TABLE 3679 for the references for the replacement procedures of permanent installed parts.**

IPL FIG. ITEM	COMPONENT PART NAME	IPL FIG. ITEM	REPLACEMENT PART NAME	SEE REPAIR TASK
06Z-001 06Z-210	Side Wall Post Assembly	06Z-230	Nut	TBD

Table 3679
Reference list for the replacement of permanent installed parts

(a) Remove and disassemble the handle assemblies 06Z-270 as follows:

1 Remove the security pins 06Z-290 from the handle assemblies 06Z-270.

2 Remove the handle assemblies 06Z-270 from the aft side wall assembly 06Z-010.

3 Remove the special screws 06Z-280 and the special washers 06Z-300 from the aft side wall assembly 06Z-010.

(b) Remove the toilet seat cover dispenser 06Z-320 from the screws 06Z-330.

(c) Remove the screws 06Z-330 from the aft side wall assembly 06Z-010.

(d) Remove the screw 06Z-350 and the coat hook 06Z-340.

(e) Remove the studs 06Z-200 and the washers 06Z-190 from the cover oxygen container assy 06Z-120.

(f) Remove the screws 06Z-140, the nuts 06Z-150 and the cover oxygen container assy 06Z-120 from the angle 06Z-130.

(g) Remove the screws 06Z-180, the washers 06Z-190 and the angle 06Z-130 from the aft side wall assembly 06Z-010.

(h) Remove the ground cable from the oxygen container assy 06Z-170.

(i) Remove the screws 06Z-180, the washers 06Z-190 and the oxygen container assy 06Z-170 from the angles 06Z-160.

(j) Remove the screws 06Z-180, the washers 06Z-190 and the angles 06Z-160 from the aft side wall assembly 06Z-010.

(k) Remove the screws 06Z-240, the washers 06Z-190 and the angle 06Z-310 from the aft side wall assembly 06Z-010.

(l) Remove the caps 06Z-250, the screws 06Z-240, 06Z-260, the washers 06Z-190 and the post assembly 06Z-210.

(m) Disassemble the post assembly 06Z-210 as follows:

1 Remove the screws 06Z-220.

(n) Remove the screws 06Z-030, 06Z-035 and the fittings 06Z-020, 06Z-025 from the aft side wall assembly 06Z-010.

SUB TASK 25-41-51-010-105-B01
D2549010402000 D2549010613800

2. Removal of the Side Wall (06Z-1)

NOTE: **See TABLE 3680 for the references for the replacement procedures of permanent installed parts.**

More data for bonded parts are given in column SEE REPAIR TASK. Use the data for the selection of the related repair solution.

IPL FIG. ITEM	COMPONENT PART NAME	IPL FIG. ITEM	REPLACEMENT PART NAME	SEE REPAIR TASK
06Z-001 06Z-210	Side Wall Post Assembly	06Z-230	Nut	TBD
06Z-001 06Z-010	Side Wall Aft Side Wall Assembly	06Z-360	Reinforcing Strip	TBD Material No. 08-017A Adhesive Structuralflexible

Table 3680
Reference list for the replacement of permanent installed parts

(a) Remove and disassemble the handle assemblies 06Z-270 as follows:

1 Remove the security pins 06Z-290 from the handle assemblies 06Z-270.

2 Remove the handle assemblies 06Z-270 from the aft side wall assembly 06Z-010.

3 Remove the special screws 06Z-280 and the special washers 06Z-300 from the aft side wall assembly 06Z-010.

(b) Remove the toilet seat cover dispenser 06Z-320 from the screws 06Z-330.

(c) Remove the screws 06Z-330 from the aft side wall assembly 06Z-010.

(d) Remove the studs 06Z-200 and the washers 06Z-190 from the cover oxygen container assy 06Z-120.

(e) Remove the screws 06Z-140, the nuts 06Z-150 and the cover oxygen container assy 06Z-120 from the angle 06Z-130.

(f) Remove the screws 06Z-180, the washers 06Z-190 and the angle 06Z-130 from the aft side wall assembly 06Z-010.

(g) Remove the ground cable from the oxygen container assy 06Z-170.

(h) Remove the screws 06Z-180, the washers 06Z-190 and the oxygen container assy 06Z-170 from the angles 06Z-160.

(i) Remove the screws 06Z-180, the washers 06Z-190 and the angles 06Z-160 from the aft side wall assembly 06Z-010.

(j) Remove the screws 06Z-240, the washers 06Z-190 and the angle 06Z-310 from the aft side wall assembly 06Z-010.

(k) Remove the caps 06Z-250, the screws 06Z-240, 06Z-260, the washers 06Z-190 and the post assembly 06Z-210.

(l) Disassemble the post assembly 06Z-210 as follows:

1 Remove the screws 06Z-220.

(m) Remove the screws 06Z-030, 06Z-035 and the fittings 06Z-020, 06Z-025 from the aft side wall assembly 06Z-010.

SUB TASK 25-41-51-010-105-C01
D2549020805600 D2549020808400 R225401192-002

3. Removal of the Side Wall (06Z-1)

NOTE: **See TABLE 3681 for the references for the replacement procedures of permanent installed parts.**

More data for bonded parts are given in column SEE REPAIR TASK. Use the data for the selection of the related repair solution.

IPL FIG. ITEM	COMPONENT PART NAME	IPL FIG. ITEM	REPLACEMENT PART NAME	SEE REPAIR TASK
06Z-001 06Z-210	Side Wall Post Assembly	06Z-230	Nut	TBD
06Z-001 06Z-010	Side Wall Aft Side Wall Assembly	06Z-360	Reinforcing Strip	TBD Material No. 08-017A Adhesive Structuralflexible

Table 3681
Reference list for the replacement of permanent installed parts

(a) Remove and disassemble the handle assemblies 06Z-270 as follows:

1 Remove the security pins 06Z-290 from the handle assemblies 06Z-270.

2 Remove the handle assemblies 06Z-270 from the aft side wall assembly 06Z-010.

3 Remove the special screws 06Z-280 and the special washers 06Z-300 from the aft side wall assembly 06Z-010.

(b) Remove the studs 06Z-200 and the washers 06Z-190 from the cover oxygen container assy 06Z-120.

(c) Remove the screws 06Z-140, the nuts 06Z-150 and the cover oxygen container assy 06Z-120 from the angle 06Z-130.

(d) Remove the screws 06Z-180, the washers 06Z-190 and the angle 06Z-130 from the aft side wall assembly 06Z-010.

(e) Remove the ground cable from the oxygen container assy 06Z-170.

(f) Remove the screws 06Z-180, 06Z-182, the washers 06Z-190 and the oxygen container assy 06Z-170 from the angles 06Z-160.

(g) Remove the screws 06Z-180, the washers 06Z-190 and the angles 06Z-160 from the aft side wall assembly 06Z-010.

(h) Remove the screws 06Z-240, the washers 06Z-190 and the angle 06Z-310 from the aft side wall assembly 06Z-010.

(i) Remove the caps 06Z-250, the screws 06Z-240, 06Z-260, the washers 06Z-190 and the post assembly 06Z-210.

(j) Disassemble the post assembly 06Z-210 as follows:

1 Remove the screws 06Z-220.

(k) Remove the screws 06Z-030, 06Z-035 and the fittings 06Z-020, 06Z-025 from the aft side wall assembly 06Z-010.

SUB TASK 25-41-51-010-105-D01
D2549010612200 D2549010614800 D2549020404200 D2549020804000 D2549020804200 D2549020814000

4. Removal of the Side Wall (06Z-1)

NOTE: **See TABLE 3682 for the references for the replacement procedures of permanent installed parts.**

IPL FIG. ITEM	COMPONENT PART NAME	IPL FIG. ITEM	REPLACEMENT PART NAME	SEE REPAIR TASK
06Z-001 06Z-210	Side Wall Post Assembly	06Z-230	Nut	TBD

Table 3682
Reference list for the replacement of permanent installed parts

(a) Remove and disassemble the handle assemblies 06Z-270 as follows:

1 Remove the security pins 06Z-290 from the handle assemblies 06Z-270.

2 Remove the handle assemblies 06Z-270 from the aft side wall assembly 06Z-010.

3 Remove the special screws 06Z-280 and the special washers 06Z-300 from the aft side wall assembly 06Z-010.

(b) Remove the toilet seat cover dispenser 06Z-320 from the screws 06Z-330.

(c) Remove the screws 06Z-330 from the aft side wall assembly 06Z-010.

(d) Remove the studs 06Z-200 and the washers 06Z-190 from the cover oxygen container assy 06Z-120.

(e) Remove the screws 06Z-140, the nuts 06Z-150 and the cover oxygen container assy 06Z-120 from the angle 06Z-130.

(f) Remove the screws 06Z-180, the washers 06Z-190 and the angle 06Z-130 from the aft side wall assembly 06Z-010.

(g) Remove the ground cable from the oxygen container assy 06Z-170.

(h) Remove the screws 06Z-180, the washers 06Z-190 and the oxygen container assy 06Z-170 from the angles 06Z-160.

(i) Remove the screws 06Z-180, the washers 06Z-190 and the angles 06Z-160 from the aft side wall assembly 06Z-010.

(j) Remove the screws 06Z-240, the washers 06Z-190 and the angle 06Z-310 from the aft side wall assembly 06Z-010.

(k) Remove the caps 06Z-250, the screws 06Z-240, 06Z-260, the washers 06Z-190 and the post assembly 06Z-210.

(l) Disassemble the post assembly 06Z-210 as follows:

1 Remove the screws 06Z-220.

(m) Remove the screws 06Z-030, 06Z-035 and the fittings 06Z-020, 06Z-025 from the aft side wall assembly 06Z-010.

SUB TASK 25-41-51-010-105-E01
D2549010611000 D2549010614200 D2549020405600 D2549020714000 D2549020806200 D2549020807000 D2549020808800 D2549020810000 D2549020810600 D2549020811400 D2549020812200 D2549020814400 D2549030405800 R225401609-000 R225401646-000 R225401647-000 R225401656-000 R225401656-002

5. Removal of the Side Wall (06Z-1)

NOTE: **See TABLE 3683 for the references for the replacement procedures of permanent installed parts.**

IPL FIG. ITEM	COMPONENT PART NAME	IPL FIG. ITEM	REPLACEMENT PART NAME	SEE REPAIR TASK
06Z-001 06Z-210	Side Wall Post Assembly	06Z-230	Nut	TBD

Table 3683
Reference list for the replacement of permanent installed parts

(a) Remove and disassemble the handle assemblies 06Z-270 as follows:

1 Remove the security pins 06Z-290 from the handle assemblies 06Z-270.

2 Remove the handle assemblies 06Z-270 from the aft side wall assembly 06Z-010.

3 Remove the special screws 06Z-280 and the special washers 06Z-300 from the aft side wall assembly 06Z-010.

(b) Remove the toilet seat cover dispenser 06Z-320 from the screws 06Z-330.

(c) Remove the screws 06Z-330 from the aft side wall assembly 06Z-010.

(d) Remove the studs 06Z-200 and the washers 06Z-190 from the cover oxygen container assy 06Z-120.

(e) Remove the screws 06Z-140, the nuts 06Z-150 and the cover oxygen container assy 06Z-120 from the angle 06Z-130.

(f) Remove the screws 06Z-180, the washers 06Z-190 and the angle 06Z-130 from the aft side wall assembly 06Z-010.

(g) Remove the ground cable from the oxygen container assy 06Z-170.

(h) Remove the screws 06Z-180, 06Z-182, the washers 06Z-190 and the oxygen container assy 06Z-170 from the angles 06Z-160.

(i) Remove the screws 06Z-180, the washers 06Z-190 and the angles 06Z-160 from the aft side wall assembly 06Z-010.

(j) Remove the screws 06Z-240, the washers 06Z-190 and the angle 06Z-310 from the aft side wall assembly 06Z-010.

(k) Remove the caps 06Z-250, the screws 06Z-240, 06Z-260, the washers 06Z-190 and the post assembly 06Z-210.

(l) Disassemble the post assembly 06Z-210 as follows:

1 Remove the screws 06Z-220.

(m) Remove the screws 06Z-030, 06Z-035 and the fittings 06Z-020, 06Z-025 from the aft side wall assembly 06Z-010.

(n) Remove the bracket 06Z-001, from the aft side wall assembly 06Z-010.

SUB TASK 25-41-51-010-105-F01
D2549020400400 D2549020807600 D2549020807800 D2549020810400 R225401643-000 R225401643-002 R225401643-004

6. Removal of the Side Wall (06Z-1)

NOTE: **See TABLE 3684 for the references for the replacement procedures of permanent installed parts.**

IPL FIG. ITEM	COMPONENT PART NAME	IPL FIG. ITEM	REPLACEMENT PART NAME	SEE REPAIR TASK
06Z-001 06Z-210	Side Wall Post Assembly	06Z-230	Nut	TBD

Table 3684
Reference list for the replacement of permanent installed parts

(a) Remove and disassemble the handle assemblies 06Z-270 as follows:

1 Remove the security pins 06Z-290 from the handle assemblies 06Z-270.

2 Remove the handle assemblies 06Z-270 from the aft side wall assembly 06Z-010.

3 Remove the special screws 06Z-280 and the special washers 06Z-300 from the aft side wall assembly 06Z-010.

(b) Remove the studs 06Z-200 and the washers 06Z-190 from the cover oxygen container assy 06Z-120.

(c) Remove the screws 06Z-140, the nuts 06Z-150 and the cover oxygen container assy 06Z-120 from the angle 06Z-130.

(d) Remove the screws 06Z-180, the washers 06Z-190 and the angle 06Z-130 from the aft side wall assembly 06Z-010.

(e) Remove the ground cable from the oxygen container assy 06Z-170.

(f) Remove the screws 06Z-180, the washers 06Z-190 and the oxygen container assy 06Z-170 from the angles 06Z-160.

(g) Remove the screws 06Z-180, the washers 06Z-190 and the angles 06Z-160 from the aft side wall assembly 06Z-010.

(h) Remove the screws 06Z-240, the washers 06Z-190 and the angle 06Z-310 from the aft side wall assembly 06Z-010.

(i) Remove the caps 06Z-250, the screws 06Z-240, 06Z-260, the washers 06Z-190 and the post assembly 06Z-210.

(j) Disassemble the post assembly 06Z-210 as follows:

1 Remove the screws 06Z-220.

(k) Remove the screws 06Z-030, 06Z-035 and the fittings 06Z-020, 06Z-025 from the aft side wall assembly 06Z-010.

SUB TASK 25-41-51-010-105-G01

D2549030401400 D2549030401600 D2549030403000 D2549030404200 D2549030405000 D2549030405600 D2549030407000 D2549030407400 D2549030407600 R225401199-000 R225401199-008 R225401199-010 R225401611-006 R225401611-012

7. Removal of the Side Wall (06Z-1)

NOTE: **See TABLE 3685 for the references for the replacement procedures of permanent installed parts.**

IPL FIG. ITEM	COMPONENT PART NAME	IPL FIG. ITEM	REPLACEMENT PART NAME	SEE REPAIR TASK
06Z-001 06Z-210	Side Wall Post Assembly	06Z-230	Nut	TBD

Table 3685
Reference list for the replacement of permanent installed parts

(a) Remove and disassemble the handle assemblies 06Z-270 as follows:

1 Remove the security pins 06Z-290 from the handle assemblies 06Z-270.

2 Remove the handle assemblies 06Z-270 from the aft side wall assembly 06Z-010.

3 Remove the special screws 06Z-280 and the special washers 06Z-300 from the aft side wall assembly 06Z-010.

(b) Remove the studs 06Z-200 and the washers 06Z-190 from the cover oxygen container assy 06Z-120.

(c) Remove the screws 06Z-140, the nuts 06Z-150 and the cover oxygen container assy 06Z-120 from the angle 06Z-130.

(d) Remove the screws 06Z-180, the washers 06Z-190 and the angle 06Z-130 from the aft side wall assembly 06Z-010.

(e) Remove the ground cable from the oxygen container assy 06Z-170.

(f) Remove the screws 06Z-180, 06Z-182, the washers 06Z-190 and the oxygen container assy 06Z-170 from the angles 06Z-160.

(g) Remove the screws 06Z-180, the washers 06Z-190 and the angles 06Z-160 from the aft side wall assembly 06Z-010.

(h) Remove the screws 06Z-240, the washers 06Z-190 and the angle 06Z-310 from the aft side wall assembly 06Z-010.

(i) Remove the caps 06Z-250, the screws 06Z-240, 06Z-260, the washers 06Z-190 and the post assembly 06Z-210.

(j) Disassemble the post assembly 06Z-210 as follows:

1 Remove the screws 06Z-220.

(k) Remove the screws 06Z-030, 06Z-035 and the fittings 06Z-020, 06Z-025 from the aft side wall assembly 06Z-010.

TASK 25-41-51-000-825-B01

D2549010403000 D2549010610800 D2549010611200 D2549010613000 D2549010613200 D2549020406200 D2549020801400 D2549020804800 D2549020805800 D2549020806000 D2549020808600 D2549020810200 D2549020811200 D2549020811800 D2549020813800 D2549030400600 D2549030401000 D2549030402400 D2549030403600 D2549030404400 D2549030404800 D2549030406400 D2549030406800 R225401145-010 R225401152-008 R225401196-008 R225401196-010 R225401196-012 R225401196-014 R225401196-016 R225401196-040 R225401196-044 R225401196-054 R225401196-056 R225401196-058 R225401196-060 R225401196-062 R225401622-000 R225401622-002 R225401648-000 R225401648-002

238. Removal of the Side Wall

A. General

A complete disassembly of the component is not necessary and not recommended.

Do not disassemble the component more than it is necessary for:

- Cleaning
- Visual Inspection
- Replacement of defective parts.

B. Job Set-up Information

(1) Not applicable

C. Procedure

WARNING: **BE CAREFUL WHEN YOU USE SOLVENTS/CLEANING AGENTS, SEALANTS AND OTHER MATERIALS. OBEY THE MATERIAL MANUFACTURER'S INSTRUCTIONS AND THE LOCAL REGULATIONS. MAKE SURE THAT THERE IS A GOOD FLOW OF AIR THROUGH THE WORK AREA. DO NOT BREATHE THE FUMES. DO NOT SMOKE. DO NOT USE THESE MATERIALS NEAR A FLAME, SPARKS OR SOURCES OF HEAT. USE PROTECTIVE CLOTHING, GOGGLES AND GLOVES. IF YOU GET ONE OF THESE MATERIALS ON YOUR SKIN OR IN YOUR EYES, FLUSH IT AWAY WITH A FLOW OF CLEAN WATER. IF YOU GET ONE OF THESE MATERIALS IN YOUR MOUTH, GET IMMEDIATE MEDICAL AID. IN GENERAL, THESE MATERIALS ARE POISONOUS, FLAMMABLE AND SKIN IRRITANTS.**

WARNING: **KEEP ALL HYDROCARBONS (FUELS, LUBRICANTS, ETC.) AWAY FROM ALL SOURCES OF OXYGEN. OXYGEN BECOMES EXPLOSIVE WHEN IT TOUCHES HYDROCARBONS.**

WARNING: **TO PREVENT CONTAMINATION OF THE OXYGEN SYSTEM, MAKE SURE THAT YOUR HANDS AND ALL THE TOOLS ARE CLEAN.**

CAUTION: **PUT DRY, CLEAN, METAL OR PLASTIC PLUGS ON ALL PIPES OR UNITS REMOVED TEMPORARILY. PUT EACH PIPE OR UNIT IN A SEALED VINYL BAG. UNWANTED MATERIALS IN THE OXYGEN SYSTEM CAN DAMAGE THE SYSTEM.**

CAUTION: **DO ALL THE WORK ON A CLEAN, SOFT SURFACE TO PREVENT DAMAGE TO THE COMPONENTS.**

SUB TASK 25-41-51-010-106-A01
D2549020801400 D2549020804800 R225401622-000 R225401622-002

1. Removal of the Side Wall (48-1)

NOTE: **See TABLE 3686 for the references for the replacement procedures of permanent installed parts.**

IPL FIG. ITEM	COMPONENT PART NAME	IPL FIG. ITEM	REPLACEMENT PART NAME	SEE REPAIR TASK
48-001 48-210	Side Wall Post Assembly	48-230	Nut	TBD

Table 3686
Reference list for the replacement of permanent installed parts

(a) Remove and disassemble the handle assembly 48-270 as follows:

1 Remove the security pins 48-290 from the handle assembly 48-270.

2 Remove the handle assembly 48-270 from the aft side wall assembly 48-010.

3 Remove the special screws 48-280 and the special washers 48-300 from the aft side wall assembly 48-010.

(b) Remove the screws 48-240, the washers 48-190 and the support 48-310 from the aft side wall assembly 48-010.

(c) Remove the studs 48-200 and the washers 48-190 from the cover oxygen container assy 48-120.

(d) Remove the screws 48-140, the nuts 48-150 and the cover oxygen container assy 48-120 from the angle 48-130.

(e) Remove the screws 48-180, the washers 48-190 and the angle 48-130 from the aft side wall assembly 48-010.

(f) Remove the ground cable from the oxygen container assy 48-170.

(g) Remove the screws 48-180, the washers 48-190 and the oxygen container assy 48-170 from the angles 48-160.

(h) Remove the screws 48-180, the washers 48-190 and the angles 48-160 from the aft side wall assembly 48-010.

(i) Remove the screws 48-240, the washers 48-190 and the angle 48-320 from the aft side wall assembly 48-010.

(j) Remove the caps 48-250, the screws 48-240, 48-260, the washers 48-190 and the post assembly 48-210.

(k) Disassemble the post assembly 48-210 as follows:

1 Remove the screws 48-220.

(l) Remove the screws 48-030 and the fittings 48-020 from the aft side wall assembly 48-010.

SUB TASK 25-41-51-010-106-B01

D2549020406200 D2549020805800 D2549020806000 D2549020808600 D2549020810200 D2549020811200 D2549020811800 D2549020813800 D2549030400600 D2549030401000 D2549030406800 R225401152-008 R225401196-008 R225401196-010 R225401196-012 R225401196-014 R225401196-016 R225401196-040 R225401196-044 R225401196-054 R225401196-056 R225401196-058 R225401196-060 R225401196-062

2. Removal of the Side Wall (48-1)

NOTE: **See TABLE 3687 for the references for the replacement procedures of permanent installed parts.**

IPL FIG. ITEM	COMPONENT PART NAME	IPL FIG. ITEM	REPLACEMENT PART NAME	SEE REPAIR TASK
48-001 48-210	Side Wall Post Assembly	48-230	Nut	TBD

Table 3687
Reference list for the replacement of permanent installed parts

(a) Remove and disassemble the handle assembly 48-270 as follows:

1 Remove the security pins 48-290 from the handle assembly 48-270.

2 Remove the handle assembly 48-270 from the aft side wall assembly 48-010.

3 Remove the special screws 48-280 and the special washers 48-300 from the aft side wall assembly 48-010.

(b) Remove the screws 48-240, the washers 48-190 and the support 48-310 from the aft side wall assembly 48-010.

(c) Remove the toilet seat cover dispenser 48-330 from the screws 48-340.

(d) Remove the screws 48-340 from the aft side wall assembly 48-010.

(e) Remove the studs 48-200 and the washers 48-190 from the cover oxygen container assy 48-120.

(f) Remove the screws 48-140, the nuts 48-150 and the cover oxygen container assy 48-120 from the angle 48-130.

(g) Remove the screws 48-180, the washers 48-190 and the angle 48-130 from the aft side wall assembly 48-010.

(h) Remove the ground cable from the oxygen container assy 48-170.

(i) Remove the screws 48-180, 48-185, the washers 48-190, 48-195 and the oxygen container assy 48-170 from the angles 48-160.

(j) Remove the screws 48-180, the washers 48-190 and the angles 48-160 from the aft side wall assembly 48-010.

(k) Remove the screws 48-240, the washers 48-190 and the angle 48-320 from the aft side wall assembly 48-010.

(l) Remove the caps 48-250, the screws 48-240, 48-260, the washers 48-190 and the post assembly 48-210.

(m) Disassemble the post assembly 48-210 as follows:

1 Remove the screws 48-220.

(n) Remove the screws 48-030 and the fittings 48-020 from the aft side wall assembly 48-010.

(o) Remove the bushing 48-305.

(p) If necessary, remove the kick strip 48-350 from the aft side wall assembly 48-010.

SUB TASK 25-41-51-010-106-C01
D2549010403000 D2549010610800 D2549010611200 D2549010613000 D2549010613200 D2549030402400 D2549030403600 D2549030404400 D2549030404800 D2549030406400 R225401145-010 R225401648-000 R225401648-002

3. Removal of the Side Wall (48-1)

NOTE: **See TABLE 3688 for the references for the replacement procedures of permanent installed parts.**

IPL FIG. ITEM	COMPONENT PART NAME	IPL FIG. ITEM	REPLACEMENT PART NAME	SEE REPAIR TASK
48-001 48-210	Side Wall Post Assembly	48-230	Nut	TBD

Table 3688
Reference list for the replacement of permanent installed parts

(a) Remove and disassemble the handle assembly 48-270 as follows:

1 Remove the security pins 48-290 from the handle assembly 48-270.

2 Remove the handle assembly 48-270 from the aft side wall assembly 48-010.

3 Remove the special screws 48-280 and the special washers 48-300 from the aft side wall assembly 48-010.

(b) Remove the screws 48-240, the washers 48-190 and the support 48-310 from the aft side wall assembly 48-010.

(c) Remove the toilet seat cover dispenser 48-330 from the screws 48-340.

(d) Remove the screws 48-340 from the aft side wall assembly 48-010.

(e) Remove the studs 48-200 and the washers 48-190 from the cover oxygen container assy 48-120.

(f) Remove the screws 48-140, the nuts 48-150 and the cover oxygen container assy 48-120 from the angle 48-130.

(g) Remove the screws 48-180, the washers 48-190 and the angle 48-130 from the aft side wall assembly 48-010.

(h) Remove the ground cable from the oxygen container assy 48-170.

(i) Remove the screws 48-180, 48-185, the washers 48-190 and the oxygen container assy 48-170 from the angles 48-160.

(j) Remove the screws 48-180, the washers 48-190 and the angles 48-160 from the aft side wall assembly 48-010.

(k) Remove the screws 48-240, the washers 48-190 and the angle 48-320 from the aft side wall assembly 48-010.

(l) Remove the caps 48-250, the screws 48-240, 48-260, the washers 48-190 and the post assembly 48-210.

(m) Disassemble the post assembly 48-210 as follows:

1 Remove the screws 48-220.

(n) Remove the screws 48-030 and the fittings 48-020 from the aft side wall assembly 48-010.

TASK 25-41-51-000-825-C01
D2549010405200 D2549010405600 D2549020411200 D2549020412000 D2549020412200 D2549020800000 D2549030410800 D2549030414200 D2549030606000 D2549030608400 D2549030700800 D2549030701400 D2549030701600 D2549030701800 D2549030704000 D2549030704600 D2549040500200 D2549040500400 D2549040500800 D2549040501000 D2549040501200 D2549040501400 D2549040501600 R225401199-002 R225401611-008 R225401611-020 R225401673-002 R225401673-004 R225401673-006 R225401808-000 R225401814-000

239. Removal of the Side Wall

A. General

A complete disassembly of the component is not necessary and not recommended.

Do not disassemble the component more than it is necessary for:

- Cleaning
- Visual Inspection
- Replacement of defective parts.

B. Job Set-up Information
(1) Consumable Materials

REFERENCE	DESIGNATION
08-007	Sealant, High Temperature

Table 3689
Consumable Materials

(2) Fixtures, Tools, Test and Support Equipment

REFERENCE	DESIGNATION
	hot air blower

Table 3690
Fixtures, Tools, Test and Support Equipment

C. Procedure

WARNING: **BE CAREFUL WHEN YOU USE SOLVENTS/CLEANING AGENTS, SEALANTS AND OTHER MATERIALS. OBEY THE MATERIAL MANUFACTURER'S INSTRUCTIONS AND THE LOCAL REGULATIONS. MAKE SURE THAT THERE IS A GOOD FLOW OF AIR THROUGH THE WORK AREA. DO NOT BREATHE THE FUMES. DO NOT SMOKE. DO NOT USE THESE MATERIALS NEAR A FLAME, SPARKS OR SOURCES OF HEAT. USE PROTECTIVE CLOTHING, GOGGLES AND GLOVES. IF YOU GET ONE OF THESE MATERIALS ON YOUR SKIN OR IN YOUR EYES, FLUSH IT AWAY WITH A FLOW OF CLEAN WATER. IF YOU GET ONE OF THESE MATERIALS IN YOUR MOUTH, GET IMMEDIATE MEDICAL AID. IN GENERAL, THESE MATERIALS ARE POISONOUS, FLAMMABLE AND SKIN IRRITANTS.**

WARNING: **KEEP ALL HYDROCARBONS (FUELS, LUBRICANTS, ETC.) AWAY FROM ALL SOURCES OF OXYGEN. OXYGEN BECOMES EXPLOSIVE WHEN IT TOUCHES HYDROCARBONS.**

WARNING: **TO PREVENT CONTAMINATION OF THE OXYGEN SYSTEM, MAKE SURE THAT YOUR HANDS AND ALL THE TOOLS ARE CLEAN.**

CAUTION: **PUT DRY, CLEAN, METAL OR PLASTIC PLUGS ON ALL PIPES OR UNITS REMOVED TEMPORARILY. PUT EACH PIPE OR UNIT IN A SEALED VINYL BAG. UNWANTED MATERIALS IN THE OXYGEN SYSTEM CAN DAMAGE THE SYSTEM.**

CAUTION: **DO ALL THE WORK ON A CLEAN, SOFT SURFACE TO PREVENT DAMAGE TO THE COMPONENTS.**

SUB TASK 25-41-51-010-107-A01
D2549020800000

1. Removal of the Side Wall (48A-1)

NOTE: **See TABLE 3691 for the references for the replacement procedures of permanent installed parts.**

IPL FIG. ITEM	COMPONENT PART NAME	IPL FIG. ITEM	REPLACEMENT PART NAME	SEE REPAIR TASK
48A-001 48A-250	Side Wall Post Assembly	48A-270	Nut	TBD

Table 3691
Reference list for the replacement of permanent installed parts

(a) Remove and disassemble the handle assemblies 48A-120 as follows:

1 Remove the security pins 48A-140 from the handle assemblies 48A-120.

2 Remove the handle assemblies 48A-120 from the aft side wall assembly 48A-010.

3 Remove the special screws 48A-130 and the special washers 48A-150 from the aft side wall assembly 48A-010.

(b) Remove the studs 48A-240 and the washers 48A-230 from the cover oxygen container assy 48A-160.

(c) Remove the screws 48A-180, the nuts 48A-190 and the cover oxygen container assy 48A-160 from the angle 48A-170.

(d) Remove the screws 48A-220, the washers 48A-230 and the angle 48A-170 from the aft side wall assembly 48A-010.

(e) Remove the ground cable from the oxygen container assy 48A-210.

(f) Remove the screws 48A-220, the washers 48A-230 and the oxygen container assy 48A-210 from the angles 48A-200.

(g) Remove the screws 48A-220, the washers 48A-230 and the angles 48A-200 from the aft side wall assembly 48A-010.

(h) Remove the screws 48A-320, 48A-340, the washers 48A-330 and the angle 48A-310.

(i) Remove the screws 48A-421, the nuts 48A-540, the plates 48A-530 and the single door emergency unlocking device assembly 48A-350 from the post assembly 48A-250.

(j) Disassemble the single door emergency unlocking device assembly 48A-350 as follows:

WARNING: BE CAREFUL WHEN YOU USE MATERIAL NO. 08-007 SEALANT, HIGH TEMPERATURE. OBEY THE MATERIAL MANUFACTURER'S INSTRUCTIONS.

1 Remove the bolt 48A-410 and the emergency unlocking device strike 48A-370 from the emergency unlocking device housing 48A-360.

NOTE: If necessary use a hot air blower to heat up the Material No. 08-007 Sealant, High Temperature to remove the bolt 48A-410.

WARNING: **BE CAREFUL WHEN YOU USE MATERIAL NO. 08-007 SEALANT, HIGH TEMPERATURE. OBEY THE MATERIAL MANUFACTURER'S INSTRUCTIONS.**

2 Remove the pin 48A-390, the snap catch 48A-400 and the emergency unlocking device pivot 48A-380 from the emergency unlocking device housing 48A-360.

NOTE: **If necessary use a hot air blower to heat up the Material No. 08-007 Sealant, High Temperature to remove the snap catch 48A-400 and the pin 48A-390.**

(k) Remove the caps 48A-290, the screws 48A-280, 48A-300, the washers 48A-230 and the post assembly 48A-250.

(l) Disassemble the post assembly 48A-250 as follows:

1 Remove the screws 48A-260.

(m) Remove the screws 48A-030 and the fittings 48A-020 from the aft side wall assembly 48A-010.

(n) If necessary, remove the kick strip 48A-550 from the aft side wall assembly 48A-010.

SUB TASK 25-41-51-010-107-B01
D2549030606000 D2549030608400 R225401199-002 R225401611-008

2. Removal of the Side Wall (48A-1)

NOTE: **See TABLE 3692 for the references for the replacement procedures of permanent installed parts.**

IPL FIG. ITEM	COMPONENT PART NAME	IPL FIG. ITEM	REPLACEMENT PART NAME	SEE REPAIR TASK
48A-001 48A-250	Side Wall Post Assembly	48A-270	Nut	TBD

Table 3692
Reference list for the replacement of permanent installed parts

(a) Remove and disassemble the handle assemblies 48A-120 as follows:

1 Remove the security pins 48A-140 from the handle assemblies 48A-120.

2 Remove the handle assemblies 48A-120 from the aft side wall assembly 48A-010.

3 Remove the special screws 48A-130 and the special washers 48A-150 from the aft side wall assembly 48A-010.

(b) Remove the studs 48A-240 and the washers 48A-230 from the cover oxygen container assy 48A-160.

(c) Remove the screws 48A-180, the nuts 48A-190 and the cover oxygen container assy 48A-160 from the angle 48A-170.

(d) Remove the screws 48A-220, the washers 48A-230 and the angle 48A-170 from the aft side wall assembly 48A-010.

(e) Remove the ground cable from the oxygen container assy 48A-210.

(f) Remove the screws 48A-220, the washers 48A-230 and the oxygen container assy 48A-210 from the angles 48A-200.

(g) Remove the screws 48A-220, the washers 48A-230 and the angles 48A-200 from the aft side wall assembly 48A-010.

(h) Remove the screws 48A-320, 48A-340, the washers 48A-330 and the angle 48A-310.

(i) Remove the caps 48A-290, the screws 48A-280, 48A-300, the washers 48A-230 and the post assembly 48A-250.

(j) Disassemble the post assembly 48A-250 as follows:

1 Remove the screws 48A-260.

(k) Remove the screws 48A-030 and the fittings 48A-020 from the aft side wall assembly 48A-010.

SUB TASK 25-41-51-010-107-C01
D2549030700800 D2549030704600

3. Removal of the Side Wall (48A-1)

NOTE: **See TABLE 3693 for the references for the replacement procedures of permanent installed parts.**

IPL FIG. ITEM	COMPONENT PART NAME	IPL FIG. ITEM	REPLACEMENT PART NAME	SEE REPAIR TASK
48A-001 48A-250	Side Wall Post Assembly	48A-270	Nut	TBD

Table 3693
Reference list for the replacement of permanent installed parts

(a) Remove and disassemble the handle assemblies 48A-120 as follows:

1 Remove the security pins 48A-140 from the handle assemblies 48A-120.

2 Remove the handle assemblies 48A-120 from the aft side wall assembly 48A-010.

3 Remove the special screws 48A-130 and the special washers 48A-150 from the aft side wall assembly 48A-010.

(b) Remove the toilet seat cover dispenser 48A-430 from the screws 48A-440.

(c) Remove the screws 48A-440 from the aft side wall assembly 48A-010.

(d) Remove the studs 48A-240 and the washers 48A-230 from the cover oxygen container assy 48A-160.

(e) Remove the screws 48A-180, the nuts 48A-190 and the cover oxygen container assy 48A-160 from the angle 48A-170.

(f) Remove the screws 48A-220, the washers 48A-230 and the angle 48A-170 from the aft side wall assembly 48A-010.

(g) Remove the screws 48A-460, the washers 48A-470, the clamps 48A-480 and the hose 48A-450 from the aft side wall assembly 48A-010.

(h) Remove the hose 48A-450 from the oxygen container assy 48A-210.

(i) Remove the ground cable from the oxygen container assy 48A-210.

(j) Remove the screws 48A-220, the washers 48A-230 and the oxygen container assy 48A-210 from the angles 48A-200.

(k) Remove the screws 48A-220, the washers 48A-230 and the angles 48A-200 from the aft side wall assembly 48A-010.

(l) Remove the screws 48A-320, 48A-340, the washers 48A-330 and the angle 48A-310.

(m) Remove the screws 48A-420 and the single door emergency unlocking device assembly 48A-350 from the post assembly 48A-250.

(n) Disassemble the single door emergency unlocking device assembly 48A-350 as follows:

WARNING: BE CAREFUL WHEN YOU USE MATERIAL NO. 08-007 SEALANT, HIGH TEMPERATURE. OBEY THE MATERIAL MANUFACTURER'S INSTRUCTIONS.

1 Remove the bolt 48A-410 and the emergency unlocking device strike 48A-370 from the emergency unlocking device housing 48A-360.

NOTE: If necessary use a hot air blower to heat up the Material No. 08-007 Sealant, High Temperature to remove the bolt 48A-410.

WARNING: BE CAREFUL WHEN YOU USE MATERIAL NO. 08-007 SEALANT, HIGH TEMPERATURE. OBEY THE MATERIAL MANUFACTURER'S INSTRUCTIONS.

2 Remove the pin 48A-390, the snap catch 48A-400 and the emergency unlocking device pivot 48A-380 from the emergency unlocking device housing 48A-360.

NOTE: If necessary use a hot air blower to heat up the Material No. 08-007 Sealant, High Temperature to remove the snap catch 48A-400 and the pin 48A-390.

(o) Remove the caps 48A-290, the screws 48A-280, 48A-300, the washers 48A-230 and the post assembly 48A-250.

(p) Disassemble the post assembly 48A-250 as follows:

1 Remove the screws 48A-260.

(q) Remove the screws 48A-030 and the fittings 48A-023, 48A-025 from the aft side wall assembly 48A-010.

SUB TASK 25-41-51-010-107-D01
D2549020411200

4. Removal of the Side Wall (48A-1)

NOTE: **See TABLE 3694 for the references for the replacement procedures of permanent installed parts.**

IPL FIG. ITEM	COMPONENT PART NAME	IPL FIG. ITEM	REPLACEMENT PART NAME	SEE REPAIR TASK
48A-001 48A-250	Side Wall Post Assembly	48A-270	Nut	TBD

Table 3694
Reference list for the replacement of permanent installed parts

(a) Remove and disassemble the handle assemblies 48A-490 as follows:

1 Remove the setscrews 48A-520 from the handle 48A-495.

2 Remove the handle 48A-495 from the aft side wall assembly 48A-010.

3 Remove the screws 48A-500 and the washers 48A-510 from the aft side wall assembly 48A-010.

(b) Remove the studs 48A-240 and the washers 48A-230 from the cover oxygen container assy 48A-160.

(c) Remove the screws 48A-180, the nuts 48A-190 and the cover oxygen container assy 48A-160 from the angle 48A-170.

(d) Remove the screws 48A-220, the washers 48A-230 and the angle 48A-170 from the aft side wall assembly 48A-010.

(e) Remove the ground cable from the oxygen container assy 48A-210.

(f) Remove the screws 48A-220, the washers 48A-230 and the oxygen container assy 48A-210 from the angles 48A-200.

(g) Remove the screws 48A-220, the washers 48A-230 and the angles 48A-200 from the aft side wall assembly 48A-010.

(h) Remove the screws 48A-320, 48A-340, the washers 48A-330 and the angle 48A-310.

(i) Remove the screws 48A-420 and the single door emergency unlocking device assembly 48A-350 from the post assembly 48A-250.

(j) Disassemble the single door emergency unlocking device assembly 48A-350 as follows:

WARNING: BE CAREFUL WHEN YOU USE MATERIAL NO. 08-007 SEALANT, HIGH TEMPERATURE. OBEY THE MATERIAL MANUFACTURER'S INSTRUCTIONS.

1 Remove the bolt 48A-410 and the emergency unlocking device strike 48A-370 from the emergency unlocking device housing 48A-360.

NOTE: If necessary use a hot air blower to heat up the Material No. 08-007 Sealant, High Temperature to remove the bolt 48A-410.

WARNING: BE CAREFUL WHEN YOU USE MATERIAL NO. 08-007 SEALANT, HIGH TEMPERATURE. OBEY THE MATERIAL MANUFACTURER'S INSTRUCTIONS.

2 Remove the pin 48A-390, the snap catch 48A-400 and the emergency unlocking device pivot 48A-380 from the emergency unlocking device housing 48A-360.

NOTE: If necessary use a hot air blower to heat up the Material No. 08-007 Sealant, High Temperature to remove the snap catch 48A-400 and the pin 48A-390.

(k) Remove the caps 48A-290, the screws 48A-280, 48A-300, the washers 48A-230 and the post assembly 48A-250.

(l) Disassemble the post assembly 48A-250 as follows:

1 Remove the screws 48A-260.

(m) Remove the screws 48A-030 and the fittings 48A-023, 48A-025 from the aft side wall assembly 48A-010.

SUB TASK 25-41-51-010-107-E01
D2549020412000 D2549040500800 D2549040501000 D2549040501400 R225401673-002 R225401673-004 R225401673-006

5. Removal of the Side Wall (48A-1)

NOTE: **See TABLE 3695 for the references for the replacement procedures of permanent installed parts.**

IPL FIG. ITEM	COMPONENT PART NAME	IPL FIG. ITEM	REPLACEMENT PART NAME	SEE REPAIR TASK
48A-001 48A-250	Side Wall Post Assembly	48A-270	Nut	TBD

Table 3695
Reference list for the replacement of permanent installed parts

(a) Remove and disassemble the handle assemblies 48A-120 as follows:

1 Remove the security pins 48A-140 from the handle assemblies 48A-120.

2 Remove the handle assemblies 48A-120 from the aft side wall assembly 48A-010.

3 Remove the special screws 48A-130 and the special washers 48A-150 from the aft side wall assembly 48A-010.

(b) Remove the toilet seat cover dispenser 48A-430 from the screws 48A-440.

(c) Remove the screws 48A-440 from the aft side wall assembly 48A-010.

(d) Remove the studs 48A-240 and the washers 48A-230 from the cover oxygen container assy 48A-160.

(e) Remove the screws 48A-180, the nuts 48A-190 and the cover oxygen container assy 48A-160 from the angle 48A-170.

(f) Remove the screws 48A-220, the washers 48A-230 and the angle 48A-170 from the aft side wall assembly 48A-010.

(g) Remove the ground cable from the oxygen container assy 48A-210.

(h) Remove the screws 48A-220, 48A-225, the washers 48A-230 and the oxygen container assy 48A-210 from the angles 48A-200.

(i) Remove the screws 48A-220, the washers 48A-230 and the angles 48A-200 from the aft side wall assembly 48A-010.

(j) Remove the screws 48A-320, 48A-340, the washers 48A-330 and the angle 48A-310.

(k) Remove the screws 48A-420 and the single door emergency unlocking device assembly 48A-350 from the post assembly 48A-250.

(l) Disassemble the single door emergency unlocking device assembly 48A-350 as follows:

WARNING: BE CAREFUL WHEN YOU USE MATERIAL NO. 08-007 SEALANT, HIGH TEMPERATURE. OBEY THE MATERIAL MANUFACTURER'S INSTRUCTIONS.

1 Remove the bolt 48A-410 and the emergency unlocking device strike 48A-370 from the emergency unlocking device housing 48A-360.

NOTE: If necessary use a hot air blower to heat up the Material No. 08-007 Sealant, High Temperature to remove the bolt 48A-410.

WARNING: BE CAREFUL WHEN YOU USE MATERIAL NO. 08-007 SEALANT, HIGH TEMPERATURE. OBEY THE MATERIAL MANUFACTURER'S INSTRUCTIONS.

2 Remove the pin 48A-390, the snap catch 48A-400 and the emergency unlocking device pivot 48A-380 from the emergency unlocking device housing 48A-360.

NOTE: If necessary use a hot air blower to heat up the Material No. 08-007 Sealant, High Temperature to remove the snap catch 48A-400 and the pin 48A-390.

(m) Remove the caps 48A-290, the screws 48A-280, 48A-300, the washers 48A-230 and the post assembly 48A-250.

(n) Disassemble the post assembly 48A-250 as follows:

1 Remove the screws 48A-260.

(o) Remove the screws 48A-030 and the fittings 48A-023, 48A-025 from the aft side wall assembly 48A-010.

SUB TASK 25-41-51-010-107-F01
D2549010405200 D2549020412200

6. Removal of the Side Wall (48A-1)

NOTE: **See TABLE 3696 for the references for the replacement procedures of permanent installed parts.**

IPL FIG. ITEM	COMPONENT PART NAME	IPL FIG. ITEM	REPLACEMENT PART NAME	SEE REPAIR TASK
48A-001 48A-250	Side Wall Post Assembly	48A-270	Nut	TBD

Table 3696
Reference list for the replacement of permanent installed parts

(a) Remove and disassemble the handle assemblies 48A-120 as follows:

1 Remove the security pins 48A-140 from the handle assemblies 48A-120.

2 Remove the handle assemblies 48A-120 from the aft side wall assembly 48A-010.

3 Remove the special screws 48A-130 and the special washers 48A-150 from the aft side wall assembly 48A-010.

(b) Remove the toilet seat cover dispenser 48A-430 from the screws 48A-440.

(c) Remove the screws 48A-440 from the aft side wall assembly 48A-010.

(d) Remove the studs 48A-240 and the washers 48A-230 from the cover oxygen container assy 48A-160.

(e) Remove the screws 48A-180, the nuts 48A-190 and the cover oxygen container assy 48A-160 from the angle 48A-170.

(f) Remove the ground cable from the oxygen container assy 48A-210.

(g) Remove the screws 48A-220, the washers 48A-230 and the oxygen container assy 48A-210 from the angles 48A-200.

(h) Remove the screws 48A-220, the washers 48A-230 and the angles 48A-200 from the aft side wall assembly 48A-010.

(i) Remove the screws 48A-320, 48A-340, the washers 48A-330 and the angle 48A-310.

(j) Remove the screws 48A-420 and the single door emergency unlocking device assembly 48A-350 from the post assembly 48A-250.

(k) Disassemble the single door emergency unlocking device assembly 48A-350 as follows:

WARNING: BE CAREFUL WHEN YOU USE MATERIAL NO. 08-007 SEALANT, HIGH TEMPERATURE. OBEY THE MATERIAL MANUFACTURER'S INSTRUCTIONS.

1 Remove the bolt 48A-410 and the emergency unlocking device strike 48A-370 from the emergency unlocking device housing 48A-360.

NOTE: If necessary use a hot air blower to heat up the Material No. 08-007 Sealant, High Temperature to remove the bolt 48A-410.

WARNING: BE CAREFUL WHEN YOU USE MATERIAL NO. 08-007 SEALANT, HIGH TEMPERATURE. OBEY THE MATERIAL MANUFACTURER'S INSTRUCTIONS.

2 Remove the pin 48A-390, the snap catch 48A-400 and the emergency unlocking device pivot 48A-380 from the emergency unlocking device housing 48A-360.

NOTE: If necessary use a hot air blower to heat up the Material No. 08-007 Sealant, High Temperature to remove the snap catch 48A-400 and the pin 48A-390.

(l) Remove the caps 48A-290, the screws 48A-280, 48A-300, the washers 48A-230 and the post assembly 48A-250.

(m) Disassemble the post assembly 48A-250 as follows:

1 Remove the screws 48A-260.

(n) Remove the screws 48A-030 and the fittings 48A-023, 48A-025 from the aft side wall assembly 48A-010.

SUB TASK 25-41-51-010-107-G01
D2549010405600 D2549030701800 R225401808-000 R225401814-000

7. Removal of the Side Wall (48A-1)

NOTE: **See TABLE 3697 for the references for the replacement procedures of permanent installed parts.**

IPL FIG. ITEM	COMPONENT PART NAME	IPL FIG. ITEM	REPLACEMENT PART NAME	SEE REPAIR TASK
48A-001 48A-250	Side Wall Post Assembly	48A-270	Nut	TBD

Table 3697
Reference list for the replacement of permanent installed parts

(a) Remove and disassemble the handle assemblies 48A-120 as follows:

1 Remove the security pins 48A-140 from the handle assemblies 48A-120.

2 Remove the handle assemblies 48A-120 from the aft side wall assembly 48A-010.

3 Remove the special screws 48A-130 and the special washers 48A-150 from the aft side wall assembly 48A-010.

(b) Remove the toilet seat cover dispenser 48A-430 from the screws 48A-440.

(c) Remove the screws 48A-440 from the aft side wall assembly 48A-010.

(d) Remove the studs 48A-240 and the washers 48A-230 from the cover oxygen container assy 48A-160.

(e) Remove the screws 48A-180, the nuts 48A-190 and the cover oxygen container assy 48A-160 from the angle 48A-170.

(f) Remove the screws 48A-220, the washers 48A-230 and the angle 48A-170 from the aft side wall assembly 48A-010.

(g) Remove the ground cable from the oxygen container assy 48A-210.

(h) Remove the screws 48A-220, 48A-225, the washers 48A-230, 48A-235 and the oxygen container assy 48A-210 from the angles 48A-200.

(i) Remove the screws 48A-220, the washers 48A-230 and the angles 48A-200 from the aft side wall assembly 48A-010.

(j) Remove the screws 48A-320, 48A-340, the washers 48A-330 and the angle 48A-310.

(k) Remove the screws 48A-420 and the single door emergency unlocking device assembly 48A-350 from the post assembly 48A-250.

(l) Disassemble the single door emergency unlocking device assembly 48A-350 as follows:

WARNING: BE CAREFUL WHEN YOU USE MATERIAL NO. 08-007 SEALANT, HIGH TEMPERATURE. OBEY THE MATERIAL MANUFACTURER'S INSTRUCTIONS.

1 Remove the bolt 48A-410 and the emergency unlocking device strike 48A-370 from the emergency unlocking device housing 48A-360.

NOTE: If necessary use a hot air blower to heat up the Material No. 08-007 Sealant, High Temperature to remove the bolt 48A-410.

WARNING: BE CAREFUL WHEN YOU USE MATERIAL NO. 08-007 SEALANT, HIGH TEMPERATURE. OBEY THE MATERIAL MANUFACTURER'S INSTRUCTIONS.

2 Remove the pin 48A-390, the snap catch 48A-400 and the emergency unlocking device pivot 48A-380 from the emergency unlocking device housing 48A-360.

NOTE: If necessary use a hot air blower to heat up the Material No. 08-007 Sealant, High Temperature to remove the snap catch 48A-400 and the pin 48A-390.

(m) Remove the caps 48A-290, the screws 48A-280, 48A-300, the washers 48A-230 and the post assembly 48A-250.

(n) Disassemble the post assembly 48A-250 as follows:

1 Remove the screws 48A-260.

(o) Remove the screws 48A-030 and the fitting 48A-025 from the aft side wall assembly 48A-010.

SUB TASK 25-41-51-010-107-H01
D2549030410800 D2549030414200 D2549030701400 D2549030701600 D2549030704000 D2549040500200 D2549040500400 D2549040501200 D2549040501600 R225401611-020

8. Removal of the Side Wall (48A-1)

NOTE: **See TABLE 3698 for the references for the replacement procedures of permanent installed parts.**

IPL FIG. ITEM	COMPONENT PART NAME	IPL FIG. ITEM	REPLACEMENT PART NAME	SEE REPAIR TASK
48A-001 48A-250	Side Wall Post Assembly	48A-270	Nut	TBD

Table 3698
Reference list for the replacement of permanent installed parts

(a) Remove and disassemble the handle assemblies 48A-120 as follows:

1 Remove the security pins 48A-140 from the handle assemblies 48A-120.

2 Remove the handle assemblies 48A-120 from the aft side wall assembly 48A-010.

3 Remove the special screws 48A-130 and the special washers 48A-150 from the aft side wall assembly 48A-010.

(b) Remove the studs 48A-240 and the washers 48A-230 from the cover oxygen container assy 48A-160.

(c) Remove the screws 48A-180, the nuts 48A-190 and the cover oxygen container assy 48A-160 from the angle 48A-170.

(d) Remove the screws 48A-220, the washers 48A-230 and the angle 48A-170 from the aft side wall assembly 48A-010.

(e) Remove the ground cable from the oxygen container assy 48A-210.

(f) Remove the screws 48A-220, the washers 48A-230 and the oxygen container assy 48A-210 from the angles 48A-200.

(g) Remove the screws 48A-220, the washers 48A-230 and the angles 48A-200 from the aft side wall assembly 48A-010.

(h) Remove the screws 48A-320, 48A-340, the washers 48A-330 and the angle 48A-310.

(i) Remove the screws 48A-420 and the single door emergency unlocking device assembly 48A-350 from the post assembly 48A-250.

(j) Disassemble the single door emergency unlocking device assembly 48A-350 as follows:

WARNING: BE CAREFUL WHEN YOU USE MATERIAL NO. 08-007 SEALANT, HIGH TEMPERATURE. OBEY THE MATERIAL MANUFACTURER'S INSTRUCTIONS.

1 Remove the bolt 48A-410 and the emergency unlocking device strike 48A-370 from the emergency unlocking device housing 48A-360.

NOTE: If necessary use a hot air blower to heat up the Material No. 08-007 Sealant, High Temperature to remove the bolt 48A-410.

WARNING: BE CAREFUL WHEN YOU USE MATERIAL NO. 08-007 SEALANT, HIGH TEMPERATURE. OBEY THE MATERIAL MANUFACTURER'S INSTRUCTIONS.

2 Remove the pin 48A-390, the snap catch 48A-400 and the emergency unlocking device pivot 48A-380 from the emergency unlocking device housing 48A-360.

NOTE: If necessary use a hot air blower to heat up the Material No. 08-007 Sealant, High Temperature to remove the snap catch 48A-400 and the pin 48A-390.

(k) Remove the caps 48A-290, the screws 48A-280, 48A-300, the washers 48A-230 and the post assembly 48A-250.

(l) Disassemble the post assembly 48A-250 as follows:

1 Remove the screws 48A-260.

(m) Remove the screws 48A-030 and the fittings 48A-023, 48A-025 from the aft side wall assembly 48A-010.

TASK 25-41-51-000-825-D01
D2549010400200 D2549010400400 D2549010400600 D2549010611400 D2549010612400 D2549010612600 D2549010613400 D2549020404400 D2549020405200 D2549020405800 D2549020513800 D2549020801800 D2549020806800 D2549020811600 D2549020812000 D2549020812400 D2549020812800 D2549020813000 D2549020813400 D2549020814600 D2549020814800 D2549030401800 D2549030406000 D2549030408000 D2549030410400 D2549030614000 R225401662-000 R225401662-002

240. Removal of the Side Wall

A. General

A complete disassembly of the component is not necessary and not recommended.

Do not disassemble the component more than it is necessary for:

- Cleaning
- Visual Inspection
- Replacement of defective parts.

B. Job Set-up Information
(1) Consumable Materials

REFERENCE	DESIGNATION
08-007	Sealant, High Temperature

Table 3699
Consumable Materials

(2) Fixtures, Tools, Test and Support Equipment

REFERENCE	DESIGNATION
	hot air blower

Table 3700
Fixtures, Tools, Test and Support Equipment

C. Procedure

WARNING: **BE CAREFUL WHEN YOU USE SOLVENTS/CLEANING AGENTS, SEALANTS AND OTHER MATERIALS. OBEY THE MATERIAL MANUFACTURER'S INSTRUCTIONS AND THE LOCAL REGULATIONS. MAKE SURE THAT THERE IS A GOOD FLOW OF AIR THROUGH THE WORK AREA. DO NOT BREATHE THE FUMES. DO NOT SMOKE. DO NOT USE THESE MATERIALS NEAR A FLAME, SPARKS OR SOURCES OF HEAT. USE PROTECTIVE CLOTHING, GOGGLES AND GLOVES. IF YOU GET ONE OF THESE MATERIALS ON YOUR SKIN OR IN YOUR EYES, FLUSH IT AWAY WITH A FLOW OF CLEAN WATER. IF YOU GET ONE OF THESE MATERIALS IN YOUR MOUTH, GET IMMEDIATE MEDICAL AID. IN GENERAL, THESE MATERIALS ARE POISONOUS, FLAMMABLE AND SKIN IRRITANTS.**

WARNING: **KEEP ALL HYDROCARBONS (FUELS, LUBRICANTS, ETC.) AWAY FROM ALL SOURCES OF OXYGEN. OXYGEN BECOMES EXPLOSIVE WHEN IT TOUCHES HYDROCARBONS.**

WARNING: **TO PREVENT CONTAMINATION OF THE OXYGEN SYSTEM, MAKE SURE THAT YOUR HANDS AND ALL THE TOOLS ARE CLEAN.**

CAUTION: **PUT DRY, CLEAN, METAL OR PLASTIC PLUGS ON ALL PIPES OR UNITS REMOVED TEMPORARILY. PUT EACH PIPE OR UNIT IN A SEALED VINYL BAG. UNWANTED MATERIALS IN THE OXYGEN SYSTEM CAN DAMAGE THE SYSTEM.**

CAUTION: **DO ALL THE WORK ON A CLEAN, SOFT SURFACE TO PREVENT DAMAGE TO THE COMPONENTS.**

SUB TASK 25-41-51-010-108-A01
D2549020405800 D2549020813000

1. Removal of the Side Wall (48B-1)

NOTE: **See TABLE 3701 for the references for the replacement procedures of permanent installed parts.**

IPL FIG. ITEM	COMPONENT PART NAME	IPL FIG. ITEM	REPLACEMENT PART NAME	SEE REPAIR TASK
48B-001 48B-260	Side Wall Post Assembly	48B-280	Nut	TBD

Table 3701
Reference list for the replacement of permanent installed parts

(a) Remove and disassemble the handle assemblies 48B-130 as follows:

1 Remove the security pins 48B-150 from the handle assemblies 48B-130.

2 Remove the handle assemblies 48B-130 from the aft side wall assembly 48B-010.

3 Remove the special screws 48B-140 and the special washers 48B-160 from the aft side wall assembly 48B-010.

(b) Remove the studs 48B-250 and the washers 48B-240 from the cover oxygen container assy 48B-170.

(c) Remove the screws 48B-190, the nuts 48B-200 and the cover oxygen container assy 48B-170 from the angle 48B-180.

(d) Remove the screws 48B-230, the washers 48B-240 and the angle 48B-180 from the aft side wall assembly 48B-010.

(e) Remove the ground cable from the oxygen container assy 48B-220.

(f) Remove the screws 48B-230, the washers 48B-240 and the oxygen container assy 48B-220 from the angles 48B-210.

(g) Remove the screws 48B-230, the washers 48B-240 and the angles 48B-210 from the aft side wall assembly 48B-010.

(h) Remove the screws 48B-350, the washers 48B-360 and the angle 48B-340.

(i) Remove the screws 48B-470, the nuts 48B-480, the plates 48B-460 and the single door emergency unlocking device assembly 48B-390 from the post assembly 48B-260.

(j) Disassemble the single door emergency unlocking device assembly 48B-390 as follows:

WARNING: BE CAREFUL WHEN YOU USE MATERIAL NO. 08-007 SEALANT, HIGH TEMPERATURE. OBEY THE MATERIAL MANUFACTURER'S INSTRUCTIONS.

1 Remove the bolt 48B-450 and the emergency unlocking device strike 48B-410 from the emergency unlocking device housing 48B-400.

NOTE: If necessary use a hot air blower to heat up the Material No. 08-007 Sealant, High Temperature to remove the bolt 48B-450.

WARNING: **BE CAREFUL WHEN YOU USE MATERIAL NO. 08-007 SEALANT, HIGH TEMPERATURE. OBEY THE MATERIAL MANUFACTURER'S INSTRUCTIONS.**

2 Remove the pin 48B-430, the snap catch 48B-440 and the emergency unlocking device pivot 48B-420 from the emergency unlocking device housing 48B-400.

NOTE: **If necessary use a hot air blower to heat up the Material No. 08-007 Sealant, High Temperature to remove the snap catch 48B-440 and the pin 48B-430.**

(k) Remove the caps 48B-300, the screws 48B-290, 48B-310, the washers 48B-240 and the post assembly 48B-260.

(l) Disassemble the post assembly 48B-260 as follows:

1 Remove the screws 48B-270.

(m) Remove the screws 48B-040, 48B-050 and the fittings 48B-020, 48B-030 from the aft side wall assembly 48B-010.

SUB TASK 25-41-51-010-108-B01
D2549020813400

2. Removal of the Side Wall (48B-1)

NOTE: **See TABLE 3702 for the references for the replacement procedures of permanent installed parts.**

IPL FIG. ITEM	COMPONENT PART NAME	IPL FIG. ITEM	REPLACEMENT PART NAME	SEE REPAIR TASK
48B-001 48B-260	Side Wall Post Assembly	48B-280	Nut	TBD

Table 3702
Reference list for the replacement of permanent installed parts

(a) Remove and disassemble the handle assemblies 48B-130 as follows:

1 Remove the security pins 48B-150 from the handle assemblies 48B-130.

2 Remove the handle assemblies 48B-130 from the aft side wall assembly 48B-010.

3 Remove the special screws 48B-140 and the special washers 48B-160 from the aft side wall assembly 48B-010.

(b) Remove the toilet seat cover dispenser 48B-320 from the screws 48B-330.

(c) Remove the screws 48B-330 from the aft side wall assembly 48B-010.

(d) Remove the screws 48B-380 and the lavatory picture frame kit 48B-370 from the aft side wall assembly 48B-010.

(e) Remove the studs 48B-250 and the washers 48B-240 from the cover oxygen container assy 48B-170.

(f) Remove the screws 48B-190, the nuts 48B-200 and the cover oxygen container assy 48B-170 from the angle 48B-180.

(g) Remove the screws 48B-230, the washers 48B-240 and the angle 48B-180 from the aft side wall assembly 48B-010.

(h) Remove the ground cable from the oxygen container assy 48B-220.

(i) Remove the screws 48B-230, the washers 48B-240 and the oxygen container assy 48B-220 from the angles 48B-210.

(j) Remove the screws 48B-230, the washers 48B-240 and the angles 48B-210 from the aft side wall assembly 48B-010.

(k) Remove the screws 48B-350, the washers 48B-360 and the angle 48B-340.

(l) Remove the caps 48B-300, the screws 48B-290, 48B-310, the washers 48B-240 and the post assembly 48B-260.

(m) Disassemble the post assembly 48B-260 as follows:

1 Remove the screws 48B-270.

(n) Remove the screws 48B-040, 48B-050 and the fittings 48B-020, 48B-030 from the aft side wall assembly 48B-010.

SUB TASK 25-41-51-010-108-C01
D2549020405200 D2549020801800 D2549020812000 D2549020814600

3. Removal of the Side Wall (48B-1)

NOTE: **See TABLE 3703 for the references for the replacement procedures of permanent installed parts.**

IPL FIG. ITEM	COMPONENT PART NAME	IPL FIG. ITEM	REPLACEMENT PART NAME	SEE REPAIR TASK
48B-001 48B-260	Side Wall Post Assembly	48B-280	Nut	TBD

Table 3703
Reference list for the replacement of permanent installed parts

(a) Remove and disassemble the handle assemblies 48B-130 as follows:

1 Remove the security pins 48B-150 from the handle assemblies 48B-130.

2 Remove the handle assemblies 48B-130 from the aft side wall assembly 48B-010.

3 Remove the special screws 48B-140 and the special washers 48B-160 from the aft side wall assembly 48B-010.

(b) Remove the toilet seat cover dispenser 48B-320 from the screws 48B-330.

(c) Remove the screws 48B-330 from the aft side wall assembly 48B-010.

(d) Remove the studs 48B-250 and the washers 48B-240 from the cover oxygen container assy 48B-170.

(e) Remove the screws 48B-190, the nuts 48B-200 and the cover oxygen container assy 48B-170 from the angle 48B-180.

(f) Remove the screws 48B-230, the washers 48B-240 and the angle 48B-180 from the aft side wall assembly 48B-010.

(g) Remove the ground cable from the oxygen container assy 48B-220.

(h) Remove the screws 48B-230, the washers 48B-240 and the oxygen container assy 48B-220 from the angles 48B-210.

(i) Remove the screws 48B-230, the washers 48B-240 and the angles 48B-210 from the aft side wall assembly 48B-010.

(j) Remove the screws 48B-350, the washers 48B-360 and the angle 48B-340.

(k) Remove the caps 48B-300, the screws 48B-290, 48B-310, the washers 48B-240 and the post assembly 48B-260.

(l) Disassemble the post assembly 48B-260 as follows:

1 Remove the screws 48B-270.

(m) Remove the screws 48B-040, 48B-050 and the fittings 48B-020, 48B-030 from the aft side wall assembly 48B-010.

SUB TASK 25-41-51-010-108-D01
D2549010400400 D2549010612400 D2549020806800 D2549020812800 D2549020814800 D2549030401800 D2549030408000 D2549030410400 D2549030614000 R225401662-000 R225401662-002

4. Removal of the Side Wall (48B-1)

NOTE: **See TABLE 3704 for the references for the replacement procedures of permanent installed parts.**

IPL FIG. ITEM	COMPONENT PART NAME	IPL FIG. ITEM	REPLACEMENT PART NAME	SEE REPAIR TASK
48B-001 48B-260	Side Wall Post Assembly	48B-280	Nut	TBD

Table 3704
Reference list for the replacement of permanent installed parts

(a) Remove and disassemble the handle assemblies 48B-130 as follows:

1 Remove the security pins 48B-150 from the handle assemblies 48B-130.

2 Remove the handle assemblies 48B-130 from the aft side wall assembly 48B-010.

3 Remove the special screws 48B-140 and the special washers 48B-160 from the aft side wall assembly 48B-010.

(b) Remove the toilet seat cover dispenser 48B-320 from the screws 48B-330.

(c) Remove the screws 48B-330 from the aft side wall assembly 48B-010.

(d) Remove the studs 48B-250 and the washers 48B-240 from the cover oxygen container assy 48B-170.

(e) Remove the screws 48B-190, the nuts 48B-200 and the cover oxygen container assy 48B-170 from the angle 48B-180.

(f) Remove the screws 48B-230, the washers 48B-240 and the angle 48B-180 from the aft side wall assembly 48B-010.

(g) Remove the ground cable from the oxygen container assy 48B-220.

(h) Remove the screws 48B-230, the washers 48B-240 and the oxygen container assy 48B-220 from the angles 48B-210.

(i) Remove the screws 48B-230, the washers 48B-240 and the angles 48B-210 from the aft side wall assembly 48B-010.

(j) Remove the screws 48B-350, the washers 48B-360 and the angle 48B-340.

(k) Remove the caps 48B-300, the screws 48B-290, 48B-310, the washers 48B-240 and the post assembly 48B-260.

(l) Disassemble the post assembly 48B-260 as follows:

1 Remove the screws 48B-270.

(m) Remove the screws 48B-040, 48B-050 and the fittings 48B-020, 48B-030 from the aft side wall assembly 48B-010.

(n) Remove the kick strip 48B-490.

SUB TASK 25-41-51-010-108-E01
D2549010400200 D2549010400600 D2549010612600 D2549010613400 D2549020404400 D2549020811600 D2549020812400

5. Removal of the Side Wall (48B-1)

NOTE: **See TABLE 3705 for the references for the replacement procedures of permanent installed parts.**

IPL FIG. ITEM	COMPONENT PART NAME	IPL FIG. ITEM	REPLACEMENT PART NAME	SEE REPAIR TASK
48B-001 48B-260	Side Wall Post Assembly	48B-280	Nut	TBD

Table 3705
Reference list for the replacement of permanent installed parts

(a) Remove and disassemble the handle assemblies 48B-130 as follows:

1 Remove the security pins 48B-150 from the handle assemblies 48B-130.

2 Remove the handle assemblies 48B-130 from the aft side wall assembly 48B-010.

3 Remove the special screws 48B-140 and the special washers 48B-160 from the aft side wall assembly 48B-010.

(b) Remove the studs 48B-250 and the washers 48B-240 from the cover oxygen container assy 48B-170.

(c) Remove the screws 48B-190, the nuts 48B-200 and the cover oxygen container assy 48B-170 from the angle 48B-180.

(d) Remove the screws 48B-230, the washers 48B-240 and the angle 48B-180 from the aft side wall assembly 48B-010.

(e) Remove the ground cable from the oxygen container assy 48B-220.

(f) Remove the screws 48B-230, the washers 48B-240 and the oxygen container assy 48B-220 from the angles 48B-210.

(g) Remove the screws 48B-230, the washers 48B-240 and the angles 48B-210 from the aft side wall assembly 48B-010.

(h) Remove the screws 48B-350, the washers 48B-360 and the angle 48B-340.

(i) Remove the caps 48B-300, the screws 48B-290, 48B-310, the washers 48B-240 and the post assembly 48B-260.

(j) Disassemble the post assembly 48B-260 as follows:

1 Remove the screws 48B-270.

(k) Remove the screws 48B-040, 48B-050 and the fittings 48B-020, 48B-030 from the aft side wall assembly 48B-010.

SUB TASK 25-41-51-010-108-F01
D2549010611400 D2549020513800 D2549030406000

6. Removal of the Side Wall (48B-1)

NOTE: **See TABLE 3706 for the references for the replacement procedures of permanent installed parts.**

IPL FIG. ITEM	COMPONENT PART NAME	IPL FIG. ITEM	REPLACEMENT PART NAME	SEE REPAIR TASK
48B-001 48B-260	Side Wall Post Assembly	48B-280	Nut	TBD

Table 3706
Reference list for the replacement of permanent installed parts

(a) Remove and disassemble the handle assemblies 48B-130 as follows:

1 Remove the security pins 48B-150 from the handle assemblies 48B-130.

2 Remove the handle assemblies 48B-130 from the aft side wall assembly 48B-010.

3 Remove the special screws 48B-140 and the special washers 48B-160 from the aft side wall assembly 48B-010.

(b) Remove the studs 48B-250 and the washers 48B-240 from the cover oxygen container assy 48B-170.

(c) Remove the screws 48B-190, the nuts 48B-200 and the cover oxygen container assy 48B-170 from the angle 48B-180.

(d) Remove the screws 48B-230, the washers 48B-240 and the angle 48B-180 from the aft side wall assembly 48B-010.

(e) Remove the ground cable from the oxygen container assy 48B-220.

(f) Remove the screws 48B-230, the washers 48B-240 and the oxygen container assy 48B-220 from the angles 48B-210.

(g) Remove the screws 48B-230, the washers 48B-240 and the angles 48B-210 from the aft side wall assembly 48B-010.

(h) Remove the screws 48B-350, the washers 48B-360 and the angle 48B-340.

(i) Remove the caps 48B-300, the screws 48B-290, 48B-310, the washers 48B-240 and the post assembly 48B-260.

(j) Disassemble the post assembly 48B-260 as follows:

1 Remove the screws 48B-270.

(k) Remove the screws 48B-040, 48B-050 and the fittings 48B-020, 48B-030 from the aft side wall assembly 48B-010.

TASK 25-41-51-000-825-E01
D2549010400800 D2549010402800 D2549010614600 D2549020301800 D2549020400000 D2549020400200 D2549020400600 D2549020403800 D2549020404000 D2549020404600 D2549020513200 D2549020810800 D2549020812600 D2549020813200 D2549020813600 D2549030406600 D2549030408200 D2549030408400 R225401136-004 R225401136-018 R225401658-000

241. Removal of the Side Wall

A. General

A complete disassembly of the component is not necessary and not recommended.

Do not disassemble the component more than it is necessary for:

- Cleaning
- Visual Inspection
- Replacement of defective parts.

B. Job Set-up Information
(1) Consumable Materials

REFERENCE	DESIGNATION
08-007	Sealant, High Temperature
08-017A	Adhesive Structuralflexible

Table 3707
Consumable Materials

(2) Fixtures, Tools, Test and Support Equipment

REFERENCE	DESIGNATION
	hot air blower

Table 3708
Fixtures, Tools, Test and Support Equipment

C. Procedure

WARNING: **BE CAREFUL WHEN YOU USE SOLVENTS/CLEANING AGENTS, SEALANTS AND OTHER MATERIALS. OBEY THE MATERIAL MANUFACTURER'S INSTRUCTIONS AND THE LOCAL REGULATIONS. MAKE SURE THAT THERE IS A GOOD FLOW OF AIR THROUGH THE WORK AREA. DO NOT BREATHE THE FUMES. DO NOT SMOKE. DO NOT USE THESE MATERIALS NEAR A FLAME, SPARKS OR SOURCES OF HEAT. USE PROTECTIVE CLOTHING, GOGGLES AND GLOVES. IF YOU GET ONE OF THESE MATERIALS ON YOUR SKIN OR IN YOUR EYES, FLUSH IT AWAY WITH A FLOW OF CLEAN WATER. IF YOU GET ONE OF THESE MATERIALS IN YOUR MOUTH, GET IMMEDIATE MEDICAL AID. IN GENERAL, THESE MATERIALS ARE POISONOUS, FLAMMABLE AND SKIN IRRITANTS.**

WARNING: **KEEP ALL HYDROCARBONS (FUELS, LUBRICANTS, ETC.) AWAY FROM ALL SOURCES OF OXYGEN. OXYGEN BECOMES EXPLOSIVE WHEN IT TOUCHES HYDROCARBONS.**

WARNING: **TO PREVENT CONTAMINATION OF THE OXYGEN SYSTEM, MAKE SURE THAT YOUR HANDS AND ALL THE TOOLS ARE CLEAN.**

CAUTION: **PUT DRY, CLEAN, METAL OR PLASTIC PLUGS ON ALL PIPES OR UNITS REMOVED TEMPORARILY. PUT EACH PIPE OR UNIT IN A SEALED VINYL BAG. UNWANTED MATERIALS IN THE OXYGEN SYSTEM CAN DAMAGE THE SYSTEM.**

CAUTION: **DO ALL THE WORK ON A CLEAN, SOFT SURFACE TO PREVENT DAMAGE TO THE COMPONENTS.**

SUB TASK 25-41-51-010-109-A01
D2549030408200

1. Removal of the Side Wall (48C-1)

NOTE: **See TABLE 3709 for the references for the replacement procedures of permanent installed parts.**

IPL FIG. ITEM	COMPONENT PART NAME	IPL FIG. ITEM	REPLACEMENT PART NAME	SEE REPAIR TASK
48C-001 48C-270	Side Wall Post Assembly	48C-290	Nut	TBD

Table 3709
Reference list for the replacement of permanent installed parts

(a) Remove and disassemble the handle assemblies 48C-140 as follows:

1 Remove the security pins 48C-160 from the handle assemblies 48C-140.

2 Remove the handle assemblies 48C-140 from the aft side wall assembly 48C-010.

3 Remove the special screws 48C-150 and the special washers 48C-170 from the aft side wall assembly 48C-010.

(b) Remove the toilet seat cover dispenser 48C-330 from the screws 48C-340.

(c) Remove the screws 48C-340 from the aft side wall assembly 48C-010.

(d) Remove the studs 48C-260 and the washers 48C-250 from the cover oxygen container assy 48C-180.

(e) Remove the screws 48C-200, the nuts 48C-210 and the cover oxygen container assy 48C-180 from the angle 48C-190.

(f) Remove the screws 48C-240, the washers 48C-250 and the angle 48C-190 from the aft side wall assembly 48C-010.

(g) Remove the ground cable from the oxygen container assy 48C-230.

(h) Remove the screws 48C-240, the washers 48C-250 and the oxygen container assy 48C-230 from the angles 48C-220.

(i) Remove the screws 48C-240, the washers 48C-250 and the angles 48C-220 from the aft side wall assembly 48C-010.

(j) Remove the screws 48C-360, the washers 48C-370 and the angle 48C-350 from the aft side wall assembly 48C-010.

(k) Remove the screws 48C-470, 48C-471, the nuts 48C-490, the plates 48C-480 and the single door emergency unlocking device assembly 48C-400 from the post assembly 48C-270.

(l) Disassemble the single door emergency unlocking device assembly 48C-400 as follows:

WARNING: **BE CAREFUL WHEN YOU USE MATERIAL NO. 08-007 SEALANT, HIGH TEMPERATURE. OBEY THE MATERIAL MANUFACTURER'S INSTRUCTIONS.**

1 Remove the bolt 48C-460 and the emergency unlocking device strike 48C-420 from the emergency unlocking device housing 48C-410.

NOTE: **If necessary use a hot air blower to heat up the Material No. 08-007 Sealant, High Temperature to remove the bolt 48C-460.**

WARNING: **BE CAREFUL WHEN YOU USE MATERIAL NO. 08-007 SEALANT, HIGH TEMPERATURE. OBEY THE MATERIAL MANUFACTURER'S INSTRUCTIONS.**

2 Remove the pin 48C-440, the snap catch 48C-450 and the emergency unlocking device pivot 48C-430 from the emergency unlocking device housing 48C-410.

NOTE: **If necessary use a hot air blower to heat up the Material No. 08-007 Sealant, High Temperature to remove the snap catch 48C-450 and the pin 48C-440.**

(m) Remove the caps 48C-310, the screws 48C-300, 48C-320, the washers 48C-250 and the post assembly 48C-270.

(n) Disassemble the post assembly 48C-270 as follows:

1 Remove the screws 48C-280.

(o) Remove the screws 48C-040, 48C-050 and the fittings 48C-020, 48C-030 from the aft side wall assembly 48C-010.

SUB TASK 25-41-51-010-109-B01
D2549010402800 D2549020403800

2. Removal of the Side Wall (48C-1)

NOTE: **See TABLE 3710 for the references for the replacement procedures of permanent installed parts.**

More data for bonded parts are given in column SEE REPAIR TASK. Use the data for the selection of the related repair solution.

IPL FIG. ITEM	COMPONENT PART NAME	IPL FIG. ITEM	REPLACEMENT PART NAME	SEE REPAIR TASK
48C-001 48C-270	Side Wall Post Assembly	48C-290	Nut	TBD
48C-001 48C-010	Side Wall Aft Side Wall Assembly	48C-500	Reinforcing Strip	TBD Material No. 08-017A Adhesive Structuralflexible

Table 3710
Reference list for the replacement of permanent installed parts

(a) Remove and disassemble the handle assemblies 48C-140 as follows:

1 Remove the security pins 48C-160 from the handle assemblies 48C-140.

2 Remove the handle assemblies 48C-140 from the aft side wall assembly 48C-010.

3 Remove the special screws 48C-150 and the special washers 48C-170 from the aft side wall assembly 48C-010.

(b) Remove the toilet seat cover dispenser 48C-330 from the screws 48C-340.

(c) Remove the screws 48C-340 from the aft side wall assembly 48C-010.

(d) Remove the studs 48C-260 and the washers 48C-250 from the cover oxygen container assy 48C-180.

(e) Remove the screws 48C-200, the nuts 48C-210 and the cover oxygen container assy 48C-180 from the angle 48C-190.

(f) Remove the screws 48C-240, the washers 48C-250 and the angle 48C-190 from the aft side wall assembly 48C-010.

(g) Remove the ground cable from the oxygen container assy 48C-230.

(h) Remove the screws 48C-240, the washers 48C-250 and the oxygen container assy 48C-230 from the angles 48C-220.

(i) Remove the screws 48C-240, the washers 48C-250 and the angles 48C-220 from the aft side wall assembly 48C-010.

(j) Remove the screws 48C-360, the washers 48C-370 and the angle 48C-350 from the aft side wall assembly 48C-010.

(k) Remove the caps 48C-310, the screws 48C-300, 48C-320, the washers 48C-250 and the post assembly 48C-270.

(l) Disassemble the post assembly 48C-270 as follows:

1 Remove the screws 48C-280.

(m) Remove the screws 48C-040, 48C-050 and the fittings 48C-020, 48C-030 from the aft side wall assembly 48C-010.

SUB TASK 25-41-51-010-109-C01
D2549010614600 R225401658-000

3. Removal of the Side Wall (48C-1)

NOTE: **See TABLE 3711 for the references for the replacement procedures of permanent installed parts.**

More data for bonded parts are given in column SEE REPAIR TASK. Use the data for the selection of the related repair solution.

IPL FIG. ITEM	COMPONENT PART NAME	IPL FIG. ITEM	REPLACEMENT PART NAME	SEE REPAIR TASK
48C-001 48C-270	Side Wall Post Assembly	48C-290	Nut	TBD
48C-001 48C-010	Side Wall Aft Side Wall Assembly	48C-500	Reinforcing Strip	TBD Material No. 08-017A Adhesive Structuralflexible

Table 3711
Reference list for the replacement of permanent installed parts

(a) Remove and disassemble the handle assemblies 48C-140 as follows:

1 Remove the security pins 48C-160 from the handle assemblies 48C-140.

2 Remove the handle assemblies 48C-140 from the aft side wall assembly 48C-010.

3 Remove the special screws 48C-150 and the special washers 48C-170 from the aft side wall assembly 48C-010.

(b) Remove the toilet seat cover dispenser 48C-330 from the screws 48C-340.

(c) Remove the screws 48C-340 from the aft side wall assembly 48C-010.

(d) Remove the studs 48C-260 and the washers 48C-250 from the cover oxygen container assy 48C-180.

(e) Remove the screws 48C-200, the nuts 48C-210 and the cover oxygen container assy 48C-180 from the angle 48C-190.

(f) Remove the screws 48C-240, the washers 48C-250 and the angle 48C-190 from the aft side wall assembly 48C-010.

(g) Remove the ground cable from the oxygen container assy 48C-230.

(h) Remove the screws 48C-240, 48C-245, the washers 48C-250 and the oxygen container assy 48C-230 from the angles 48C-220.

(i) Remove the screws 48C-240, the washers 48C-250 and the angles 48C-220 from the aft side wall assembly 48C-010.

(j) Remove the screws 48C-360, the washers 48C-370 and the angle 48C-350 from the aft side wall assembly 48C-010.

(k) Remove the caps 48C-310, the screws 48C-300, 48C-320, the washers 48C-250 and the post assembly 48C-270.

(l) Disassemble the post assembly 48C-270 as follows:

1 Remove the screws 48C-280.

(m) Remove the screws 48C-040, 48C-050 and the fittings 48C-020, 48C-030 from the aft side wall assembly 48C-010.

SUB TASK 25-41-51-010-109-D01
D2549020301800 D2549020400600 D2549020404000 D2549020813200

4. Removal of the Side Wall (48C-1)

NOTE: **See TABLE 3712 for the references for the replacement procedures of permanent installed parts.**

IPL FIG. ITEM	COMPONENT PART NAME	IPL FIG. ITEM	REPLACEMENT PART NAME	SEE REPAIR TASK
48C-001 48C-270	Side Wall Post Assembly	48C-290	Nut	Replacement of the Riveted Parts

Table 3712
Reference list for the replacement of permanent installed parts

(a) Remove and disassemble the handle assemblies 48C-140 as follows:

1 Remove the security pins 48C-160 from the handle assemblies 48C-140.

2 Remove the handle assemblies 48C-140 from the aft side wall assembly 48C-010.

3 Remove the special screws 48C-150 and the special washers 48C-170 from the aft side wall assembly 48C-010.

(b) Remove the toilet seat cover dispenser 48C-330 from the screws 48C-340.

(c) Remove the screws 48C-340 from the aft side wall assembly 48C-010.

(d) Remove the studs 48C-260 and the washers 48C-250 from the cover oxygen container assy 48C-180.

(e) Remove the screws 48C-200, the nuts 48C-210 and the cover oxygen container assy 48C-180 from the angle 48C-190.

(f) Remove the screws 48C-240, the washers 48C-250 and the angle 48C-190 from the aft side wall assembly 48C-010.

(g) Remove the ground cable from the oxygen container assy 48C-230.

(h) Remove the screws 48C-240, the washers 48C-250 and the oxygen container assy 48C-230 from the angles 48C-220.

(i) Remove the screws 48C-240, the washers 48C-250 and the angles 48C-220 from the aft side wall assembly 48C-010.

(j) Remove the screws 48C-360, the washers 48C-370 and the angle 48C-350 from the aft side wall assembly 48C-010.

(k) Remove the screws 48C-470 and the single door emergency unlocking device assembly 48C-400 from the post assembly 48C-270.

(l) Disassemble the single door emergency unlocking device assembly 48C-400 as follows:

WARNING: BE CAREFUL WHEN YOU USE MATERIAL NO. 08-007 SEALANT, HIGH TEMPERATURE. OBEY THE MATERIAL MANUFACTURER'S INSTRUCTIONS.

1 Remove the bolt 48C-460 and the emergency unlocking device strike 48C-420 from the emergency unlocking device housing 48C-410.

NOTE: If necessary use a hot air blower to heat up the Material No. 08-007 Sealant, High Temperature to remove the bolt 48C-460.

WARNING: BE CAREFUL WHEN YOU USE MATERIAL NO. 08-007 SEALANT, HIGH TEMPERATURE. OBEY THE MATERIAL MANUFACTURER'S INSTRUCTIONS.

2 Remove the pin 48C-440, the snap catch 48C-450 and the emergency unlocking device pivot 48C-430 from the emergency unlocking device housing 48C-410.

NOTE: If necessary use a hot air blower to heat up the Material No. 08-007 Sealant, High Temperature to remove the snap catch 48C-450 and the pin 48C-440.

(m) Remove the caps 48C-310, the screws 48C-300, 48C-320, the washers 48C-250 and the post assembly 48C-270.

(n) Disassemble the post assembly 48C-270 as follows:

1 Remove the screws 48C-280.

(o) Remove the screws 48C-040, 48C-050 and the fittings 48C-020, 48C-030 from the aft side wall assembly 48C-010.

SUB TASK 25-41-51-010-109-E01
D2549020400000 D2549030408400

5. Removal of the Side Wall (48C-1)

NOTE: **See TABLE 3713 for the references for the replacement procedures of permanent installed parts.**

IPL FIG. ITEM	COMPONENT PART NAME	IPL FIG. ITEM	REPLACEMENT PART NAME	SEE REPAIR TASK
48C-001 48C-270	Side Wall Post Assembly	48C-290	Nut	TBD

Table 3713
Reference list for the replacement of permanent installed parts

(a) Remove and disassemble the handle assemblies 48C-140 as follows:

1 Remove the security pins 48C-160 from the handle assemblies 48C-140.

2 Remove the handle assemblies 48C-140 from the aft side wall assembly 48C-010.

3 Remove the special screws 48C-150 and the special washers 48C-170 from the aft side wall assembly 48C-010.

(b) Remove the toilet seat cover dispenser 48C-330 from the screws 48C-340.

(c) Remove the screws 48C-340 from the aft side wall assembly 48C-010.

(d) Remove the screw 48C-390 and the coat hook 48C-380.

(e) Remove the studs 48C-260 and the washers 48C-250 from the cover oxygen container assy 48C-180.

(f) Remove the screws 48C-200, the nuts 48C-210 and the cover oxygen container assy 48C-180 from the angle 48C-190.

(g) Remove the screws 48C-240, the washers 48C-250 and the angle 48C-190 from the aft side wall assembly 48C-010.

(h) Remove the ground cable from the oxygen container assy 48C-230.

(i) Remove the screws 48C-240, the washers 48C-250 and the oxygen container assy 48C-230 from the angles 48C-220.

(j) Remove the screws 48C-240, the washers 48C-250 and the angles 48C-220 from the aft side wall assembly 48C-010.

(k) Remove the screws 48C-360, the washers 48C-370 and the angle 48C-350 from the aft side wall assembly 48C-010.

(l) Remove the caps 48C-310, the screws 48C-300, 48C-320, the washers 48C-250 and the post assembly 48C-270.

(m) Disassemble the post assembly 48C-270 as follows:

1 Remove the screws 48C-280.

(n) Remove the screws 48C-040, 48C-050 and the fittings 48C-020, 48C-030 from the aft side wall assembly 48C-010.

SUB TASK 25-41-51-010-109-F01
D2549010400800

6. Removal of the Side Wall (48C-1)

NOTE: **See TABLE 3714 for the references for the replacement procedures of permanent installed parts.**

IPL FIG. ITEM	COMPONENT PART NAME	IPL FIG. ITEM	REPLACEMENT PART NAME	SEE REPAIR TASK
48C-001 48C-270	Side Wall Post Assembly	48C-290	Nut	TBD

Table 3714
Reference list for the replacement of permanent installed parts

(a) Remove and disassemble the handle assemblies 48C-140 as follows:

1 Remove the security pins 48C-160 from the handle assemblies 48C-140.

2 Remove the handle assemblies 48C-140 from the aft side wall assembly 48C-010.

3 Remove the special screws 48C-150 and the special washers 48C-170 from the aft side wall assembly 48C-010.

(b) Remove the screw 48C-390 and the coat hook 48C-380.

(c) Remove the studs 48C-260 and the washers 48C-250 from the cover oxygen container assy 48C-180.

(d) Remove the screws 48C-200, the nuts 48C-210 and the cover oxygen container assy 48C-180 from the angle 48C-190.

(e) Remove the screws 48C-240, the washers 48C-250 and the angle 48C-190 from the aft side wall assembly 48C-010.

(f) Remove the ground cable from the oxygen container assy 48C-230.

(g) Remove the screws 48C-240, the washers 48C-250 and the oxygen container assy 48C-230 from the angles 48C-220.

(h) Remove the screws 48C-240, the washers 48C-250 and the angles 48C-220 from the aft side wall assembly 48C-010.

(i) Remove the screws 48C-360, the washers 48C-370 and the angle 48C-350 from the aft side wall assembly 48C-010.

(j) Remove the caps 48C-310, the screws 48C-300, 48C-320, the washers 48C-250 and the post assembly 48C-270.

(k) Disassemble the post assembly 48C-270 as follows:

1 Remove the screws 48C-280.

(l) Remove the screws 48C-040, 48C-050 and the fittings 48C-020, 48C-030 from the aft side wall assembly 48C-010.

SUB TASK 25-41-51-010-109-G01
D2549020400200 D2549020404600 D2549020812600 D2549020813600

7. Removal of the Side Wall (48C-1)

NOTE: **See TABLE 3715 for the references for the replacement procedures of permanent installed parts.**

IPL FIG. ITEM	COMPONENT PART NAME	IPL FIG. ITEM	REPLACEMENT PART NAME	SEE REPAIR TASK
48C-001 48C-270	Side Wall Post Assembly	48C-290	Nut	TBD

Table 3715
Reference list for the replacement of permanent installed parts

(a) Remove and disassemble the handle assemblies 48C-140 as follows:

1 Remove the security pins 48C-160 from the handle assemblies 48C-140.

2 Remove the handle assemblies 48C-140 from the aft side wall assembly 48C-010.

3 Remove the special screws 48C-150 and the special washers 48C-170 from the aft side wall assembly 48C-010.

(b) Remove the toilet seat cover dispenser 48C-330 from the screws 48C-340.

(c) Remove the screws 48C-340 from the aft side wall assembly 48C-010.

(d) Remove the studs 48C-260 and the washers 48C-250 from the cover oxygen container assy 48C-180.

(e) Remove the screws 48C-200, the nuts 48C-210 and the cover oxygen container assy 48C-180 from the angle 48C-190.

(f) Remove the screws 48C-240, the washers 48C-250 and the angle 48C-190 from the aft side wall assembly 48C-010.

(g) Remove the ground cable from the oxygen container assy 48C-230.

(h) Remove the screws 48C-240, the washers 48C-250 and the oxygen container assy 48C-230 from the angles 48C-220.

(i) Remove the screws 48C-240, the washers 48C-250 and the angles 48C-220 from the aft side wall assembly 48C-010.

(j) Remove the screws 48C-360, the washers 48C-370 and the angle 48C-350 from the aft side wall assembly 48C-010.

(k) Remove the caps 48C-310, the screws 48C-300, 48C-320, the washers 48C-250 and the post assembly 48C-270.

(l) Disassemble the post assembly 48C-270 as follows:

1 Remove the screws 48C-280.

(m) Remove the screws 48C-040, 48C-050 and the fittings 48C-020, 48C-030 from the aft side wall assembly 48C-010.

SUB TASK 25-41-51-010-109-H01
D2549020810800

8. Removal of the Side Wall (48C-1)

NOTE: **See TABLE 3716 for the references for the replacement procedures of permanent installed parts.**

IPL FIG. ITEM	COMPONENT PART NAME	IPL FIG. ITEM	REPLACEMENT PART NAME	SEE REPAIR TASK
48C-001 48C-270	Side Wall Post Assembly	48C-290	Nut	TBD

Table 3716
Reference list for the replacement of permanent installed parts

(a) Remove and disassemble the handle assemblies 48C-140 as follows:

1 Remove the security pins 48C-160 from the handle assemblies 48C-140.

2 Remove the handle assemblies 48C-140 from the aft side wall assembly 48C-010.

3 Remove the special screws 48C-150 and the special washers 48C-170 from the aft side wall assembly 48C-010.

(b) Remove the studs 48C-260 and the washers 48C-250 from the cover oxygen container assy 48C-180.

(c) Remove the screws 48C-200, the nuts 48C-210 and the cover oxygen container assy 48C-180 from the angle 48C-190.

(d) Remove the screws 48C-240, the washers 48C-250 and the angle 48C-190 from the aft side wall assembly 48C-010.

(e) Remove the ground cable from the oxygen container assy 48C-230.

(f) Remove the screws 48C-240, the washers 48C-250 and the oxygen container assy 48C-230 from the angles 48C-220.

(g) Remove the screws 48C-240, the washers 48C-250 and the angles 48C-220 from the aft side wall assembly 48C-010.

(h) Remove the screws 48C-360, the washers 48C-370 and the angle 48C-350 from the aft side wall assembly 48C-010.

(i) Remove the caps 48C-310, the screws 48C-300, 48C-320, the washers 48C-250 and the post assembly 48C-270.

(j) Disassemble the post assembly 48C-270 as follows:

1 Remove the screws 48C-280.

(k) Remove the screws 48C-040, 48C-050 and the fittings 48C-020, 48C-030 from the aft side wall assembly 48C-010.

SUB TASK 25-41-51-010-109-J01
D2549020513200 D2549030406600 R225401136-004 R225401136-018

9. Removal of the Side Wall (48C-1)

NOTE: **See TABLE 3717 for the references for the replacement procedures of permanent installed parts.**

IPL FIG. ITEM	COMPONENT PART NAME	IPL FIG. ITEM	REPLACEMENT PART NAME	SEE REPAIR TASK
48C-001 48C-270	Side Wall Post Assembly	48C-290	Nut	TBD

Table 3717
Reference list for the replacement of permanent installed parts

(a) Remove and disassemble the handle assemblies 48C-140 as follows:

1 Remove the security pins 48C-160 from the handle assemblies 48C-140.

2 Remove the handle assemblies 48C-140 from the aft side wall assembly 48C-010.

3 Remove the special screws 48C-150 and the special washers 48C-170 from the aft side wall assembly 48C-010.

(b) Remove the studs 48C-260 and the washers 48C-250 from the cover oxygen container assy 48C-180.

(c) Remove the screws 48C-200, the nuts 48C-210 and the cover oxygen container assy 48C-180 from the angle 48C-190.

(d) Remove the screws 48C-240, the washers 48C-250 and the angle 48C-190 from the aft side wall assembly 48C-010.

(e) Remove the ground cable from the oxygen container assy 48C-230.

(f) Remove the screws 48C-240, 48C-245, the washers 48C-250 and the oxygen container assy 48C-230 from the angles 48C-220.

(g) Remove the screws 48C-240, the washers 48C-250 and the angles 48C-220 from the aft side wall assembly 48C-010.

(h) Remove the screws 48C-360, the washers 48C-370 and the angle 48C-350 from the aft side wall assembly 48C-010.

(i) Remove the caps 48C-310, the screws 48C-300, 48C-320, the washers 48C-250 and the post assembly 48C-270.

(j) Disassemble the post assembly 48C-270 as follows:

1 Remove the screws 48C-280.

(k) Remove the screws 48C-040, 48C-050 and the fittings 48C-020, 48C-030 from the aft side wall assembly 48C-010.

TASK 25-41-51-000-825-F01

D2547161903000 D2549010400000 D2549010401800 D2549010402200 D2549010402600 D2549010403600 D2549010406800 D2549020302800 D2549020401200 D2549020402600 D2549020403000 D2549020407000 D2549020407600 D2549020407800 D2549020409000 D2549020413400 D2549020805200 D2549020807200 D2549030407800 D2549030409000 D2549030409800 D2549030411400 D2549030412400 D2549030700200 D2549030702600 R225401134-014 R225401134-038 R225401152-010 R225401196-018 R225401196-020 R225401196-022 R225401196-024 R225401196-042 R225401196-064 R225401196-066 R225401196-068 R225401196-070 R225401648-004 R225401648-006 R225401648-008 R225401676-000 R225401683-000

242. Removal of the Side Wall

A. General

A complete disassembly of the component is not necessary and not recommended.

Do not disassemble the component more than it is necessary for:

- Cleaning
- Visual Inspection
- Replacement of defective parts.

B. Job Set-up Information

(1) Consumable Materials

REFERENCE	DESIGNATION
08-007	Sealant, High Temperature

Table 3718
Consumable Materials

(2) Fixtures, Tools, Test and Support Equipment

REFERENCE	DESIGNATION
	hot air blower

Table 3719
Fixtures, Tools, Test and Support Equipment

C. Procedure

WARNING: **BE CAREFUL WHEN YOU USE SOLVENTS/CLEANING AGENTS, SEALANTS AND OTHER MATERIALS. OBEY THE MATERIAL MANUFACTURER'S INSTRUCTIONS AND THE LOCAL REGULATIONS. MAKE SURE THAT THERE IS A GOOD FLOW OF AIR THROUGH THE WORK AREA. DO NOT BREATHE THE FUMES. DO NOT SMOKE. DO NOT USE THESE MATERIALS NEAR A FLAME, SPARKS OR SOURCES OF HEAT. USE PROTECTIVE CLOTHING, GOGGLES AND GLOVES. IF YOU GET ONE OF THESE MATERIALS ON YOUR SKIN OR IN YOUR EYES, FLUSH IT AWAY WITH A FLOW OF CLEAN WATER. IF YOU GET ONE OF THESE MATERIALS IN YOUR MOUTH, GET IMMEDIATE MEDICAL AID. IN GENERAL, THESE MATERIALS ARE POISONOUS, FLAMMABLE AND SKIN IRRITANTS.**

WARNING: **KEEP ALL HYDROCARBONS (FUELS, LUBRICANTS, ETC.) AWAY FROM ALL SOURCES OF OXYGEN. OXYGEN BECOMES EXPLOSIVE WHEN IT TOUCHES HYDROCARBONS.**

WARNING: **TO PREVENT CONTAMINATION OF THE OXYGEN SYSTEM, MAKE SURE THAT YOUR HANDS AND ALL THE TOOLS ARE CLEAN.**

CAUTION: **PUT DRY, CLEAN, METAL OR PLASTIC PLUGS ON ALL PIPES OR UNITS REMOVED TEMPORARILY. PUT EACH PIPE OR UNIT IN A SEALED VINYL BAG. UNWANTED MATERIALS IN THE OXYGEN SYSTEM CAN DAMAGE THE SYSTEM.**

CAUTION: **DO ALL THE WORK ON A CLEAN, SOFT SURFACE TO PREVENT DAMAGE TO THE COMPONENTS.**

SUB TASK 25-41-51-010-110-A01
D2549010400000 D2549010402600

1. Removal of the Side Wall (48D-1)

NOTE: **See TABLE 3720 for the references for the replacement procedures of permanent installed parts.**

IPL FIG. ITEM	COMPONENT PART NAME	IPL FIG. ITEM	REPLACEMENT PART NAME	SEE REPAIR TASK
48D-001 48D-210	Side Wall Post Assembly	48D-230	Nut	TBD

Table 3720
Reference list for the replacement of permanent installed parts

(a) Remove and disassemble the handle assembly 48D-270 as follows:

1 Remove the security pins 48D-290 from the handle assembly 48D-270.

2 Remove the handle assembly 48D-270 from the aft side wall assembly 48D-010.

3 Remove the bushings 48D-305 from the aft side wall assembly 48D-010.

4 Remove the special screws 48D-280 and the special washers 48D-300 from the aft side wall assembly 48D-010.

(b) Remove the screws 48D-245, the washers 48D-190 and the support 48D-310 from the aft side wall assembly 48D-010.

(c) Remove the toilet seat cover dispenser 48D-330 from the screws 48D-340.

(d) Remove the screws 48D-340 from the aft side wall assembly 48D-010.

(e) Remove the studs 48D-200 from the oxygen container assy 48D-120.

(f) Remove the screws 48D-140, the nuts 48D-150 and the cover oxygen container assy 48D-120 from the angle 48D-130.

(g) Remove the screws 48D-180, the washers 48D-190 and the angle 48D-130 from the aft side wall assembly 48D-010.

(h) Remove the ground cable from the oxygen container assy 48D-170.

(i) Remove the screws 48D-180, 48D-187, the washers 48D-190, 48D-195 and the oxygen container assy 48D-170 from the angles 48D-160.

(j) Remove the screws 48D-180, the washers 48D-190 and the angles 48D-160 from the aft side wall assembly 48D-010.

(k) Remove the screws 48D-240, the washers 48D-190 and the angle 48D-320 from the aft side wall assembly 48D-010.

(l) Remove the screws 48D-421, the nuts 48D-440, the plates 48D-430 and the single door emergency unlocking device assembly 48D-350 from the post assembly 48D-210.

(m) Disassemble the single door emergency unlocking device assembly 48D-350 as follows:

WARNING: **BE CAREFUL WHEN YOU USE MATERIAL NO. 08-007 SEALANT, HIGH TEMPERATURE. OBEY THE MATERIAL MANUFACTURER'S INSTRUCTIONS.**

1 Remove the bolt 48D-410 and the emergency unlocking device strike 48D-370 from the emergency unlocking device housing 48D-360.

NOTE: **If necessary use a hot air blower to heat up the Material No. 08-007 Sealant, High Temperature to remove the bolt 48D-410.**

WARNING: **BE CAREFUL WHEN YOU USE MATERIAL NO. 08-007 SEALANT, HIGH TEMPERATURE. OBEY THE MATERIAL MANUFACTURER'S INSTRUCTIONS.**

2 Remove the pin 48D-390, the snap catch 48D-400 and the emergency unlocking device pivot 48D-380 from the emergency unlocking device housing 48D-360.

NOTE: **If necessary use a hot air blower to heat up the Material No. 08-007 Sealant, High Temperature to remove the snap catch 48D-400 and the pin 48D-390.**

(n) Remove the caps 48D-250, the screws 48D-240, 48D-260, the washers 48D-190 and the post assembly 48D-210.

(o) Disassemble the post assembly 48D-210 as follows:

1 Remove the screws 48D-220 and the plates 48D-215.

(p) Remove the screws 48D-030, 48D-035 and the fittings 48D-020, 48D-025 from the aft side wall assembly 48D-010.

SUB TASK 25-41-51-010-110-B01
D2549010402200 R225401676-000

2. Removal of the Side Wall (48D-1)

NOTE: **See TABLE 3721 for the references for the replacement procedures of permanent installed parts.**

IPL FIG. ITEM	COMPONENT PART NAME	IPL FIG. ITEM	REPLACEMENT PART NAME	SEE REPAIR TASK
48D-001 48D-210	Side Wall Post Assembly	48D-230	Nut	TBD
48D-001 48D-210	Side Wall Post Assembly	48D-235	Nut	TBD

Table 3721
Reference list for the replacement of permanent installed parts

(a) Remove and disassemble the handle assembly 48D-270 as follows:

1 Remove the security pins 48D-290 from the handle assembly 48D-270.

2 Remove the handle assembly 48D-270 from the aft side wall assembly 48D-010.

3 Remove the bushing 48D-305 from the aft side wall assembly 48D-010.

4 Remove the special screws 48D-280 and the special washers 48D-300 from the aft side wall assembly 48D-010.

(b) Remove the screws 48D-245, the washers 48D-190 and the support 48D-310 from the aft side wall assembly 48D-010.

(c) Remove the studs 48D-200 from the oxygen container assy 48D-120.

(d) Remove the screws 48D-140, the nuts 48D-150 and the cover oxygen container assy 48D-120 from the angle 48D-130.

(e) Remove the screws 48D-180, the washers 48D-190 and the angle 48D-130 from the aft side wall assembly 48D-010.

(f) Remove the ground cable from the oxygen container assy 48D-170.

(g) Remove the screws 48D-180, the washers 48D-190 and the oxygen container assy 48D-170 from the angles 48D-160.

(h) Remove the screws 48D-180, the washers 48D-190 and the angles 48D-160 from the aft side wall assembly 48D-010.

(i) Remove the screws 48D-240, the washers 48D-190 and the angle 48D-320 from the aft side wall assembly 48D-010.

(j) Remove the screws 48D-420 and the single door emergency unlocking device assembly 48D-350 from the post assembly 48D-210.

(k) Disassemble the single door emergency unlocking device assembly 48D-350 as follows:

WARNING: BE CAREFUL WHEN YOU USE MATERIAL NO. 08-007 SEALANT, HIGH TEMPERATURE. OBEY THE MATERIAL MANUFACTURER'S INSTRUCTIONS.

1 Remove the bolt 48D-410 and the emergency unlocking device strike 48D-370 from the emergency unlocking device housing 48D-360.

NOTE: If necessary use a hot air blower to heat up the Material No. 08-007 Sealant, High Temperature to remove the bolt 48D-410.

WARNING: BE CAREFUL WHEN YOU USE MATERIAL NO. 08-007 SEALANT, HIGH TEMPERATURE. OBEY THE MATERIAL MANUFACTURER'S INSTRUCTIONS.

2 Remove the pin 48D-390, the snap catch 48D-400 and the emergency unlocking device pivot 48D-380 from the emergency unlocking device housing 48D-360.

NOTE: If necessary use a hot air blower to heat up the Material No. 08-007 Sealant, High Temperature to remove the snap catch 48D-400 and the pin 48D-390.

(l) Remove the caps 48D-250, the screws 48D-240, 48D-260, the washers 48D-190 and the post assembly 48D-210.

(m) Disassemble the post assembly 48D-210 as follows:

1 Remove the screws 48D-220 and the plates 48D-215.

2 Remove the screws 48D-225 and the plates 48D-217.

(n) Remove the screws 48D-030, 48D-035 and the fittings 48D-020, 48D-025 from the aft side wall assembly 48D-010.

SUB TASK 25-41-51-010-110-C01
D2549020302800 D2549020401200 D2549020402600 D2549020403000 D2549020407000 D2549020407800 D2549020409000 D2549020413400 D2549030409000 D2549030700200 D2549030702600 R225401134-014 R225401134-038 R225401152-010 R225401196-018 R225401196-020 R225401196-022 R225401196-024 R225401196-042 R225401196-064 R225401196-066 R225401196-068 R225401196-070

3. Removal of the Side Wall (48D-1)

NOTE: **See TABLE 3722 for the references for the replacement procedures of permanent installed parts.**

IPL FIG. ITEM	COMPONENT PART NAME	IPL FIG. ITEM	REPLACEMENT PART NAME	SEE REPAIR TASK
48D-001 48D-210	Side Wall Post Assembly	48D-230	Nut	Replacement of the Riveted Parts
48D-001 48D-210	Side Wall Post Assembly	48D-235	Nut	Replacement of the Riveted Parts

Table 3722
Reference list for the replacement of permanent installed parts

(a) Remove and disassemble the handle assembly 48D-270 as follows:

1 Remove the security pins 48D-290 from the handle assembly 48D-270.

2 Remove the handle assembly 48D-270 from the aft side wall assembly 48D-010.

3 Remove the bushings 48D-305 from the aft side wall assembly 48D-010.

4 Remove the special screws 48D-280 and the special washers 48D-300 from the aft side wall assembly 48D-010.

(b) Remove the screws 48D-245, the washers 48D-190 and the support 48D-310 from the aft side wall assembly 48D-010.

(c) Remove the toilet seat cover dispenser 48D-330 from the screws 48D-340.

(d) Remove the screws 48D-340 from the aft side wall assembly 48D-010.

(e) Remove the studs 48D-200 from the oxygen container assy 48D-120.

(f) Remove the screws 48D-140, the nuts 48D-150 and the cover oxygen container assy 48D-120 from the angle 48D-130.

(g) Remove the screws 48D-180, the washers 48D-190 and the angle 48D-130 from the aft side wall assembly 48D-010.

(h) Remove the ground cable from the oxygen container assy 48D-170.

(i) Remove the screws 48D-180, 48D-187, the washers 48D-190, 48D-195 and the oxygen container assy 48D-170 from the angles 48D-160.

(j) Remove the screws 48D-180, the washers 48D-190 and the angles 48D-160 from the aft side wall assembly 48D-010.

(k) Remove the screws 48D-240, the washers 48D-190 and the angle 48D-320 from the aft side wall assembly 48D-010.

(l) Remove the screws 48D-420 and the single door emergency unlocking device assembly 48D-350 from the post assembly 48D-210.

(m) Disassemble the single door emergency unlocking device assembly 48D-350 as follows:

WARNING: BE CAREFUL WHEN YOU USE MATERIAL NO. 08-007 SEALANT, HIGH TEMPERATURE. OBEY THE MATERIAL MANUFACTURER'S INSTRUCTIONS.

1 Remove the bolt 48D-410 and the emergency unlocking device strike 48D-370 from the emergency unlocking device housing 48D-360.

NOTE: If necessary use a hot air blower to heat up the Material No. 08-007 Sealant, High Temperature to remove the bolt 48D-410.

WARNING: **BE CAREFUL WHEN YOU USE MATERIAL NO. 08-007 SEALANT, HIGH TEMPERATURE. OBEY THE MATERIAL MANUFACTURER'S INSTRUCTIONS.**

2 Remove the pin 48D-390, the snap catch 48D-400 and the emergency unlocking device pivot 48D-380 from the emergency unlocking device housing 48D-360.

NOTE: **If necessary use a hot air blower to heat up the Material No. 08-007 Sealant, High Temperature to remove the snap catch 48D-400 and the pin 48D-390.**

(n) Remove the caps 48D-250, the screws 48D-240, 48D-260, the washers 48D-190 and the post assembly 48D-210.

(o) Disassemble the post assembly 48D-210 as follows:

1 Remove the screws 48D-220 and the plates 48D-215.

2 Remove the screws 48D-225 and the plates 48D-217.

(p) Remove the screws 48D-030, 48D-035 and the fittings 48D-020, 48D-025 from the aft side wall assembly 48D-010.

(q) If necessary, remove the kick strip 48D-580.

SUB TASK 25-41-51-010-110-D01
D2549010401800 D2549010403600 D2549010406800 D2549020407600 D2549030411400 D2549030412400 R225401648-004 R225401648-006 R225401648-008 R225401683-000

4. Removal of the Side Wall (48D-1)

NOTE: **See TABLE 3723 for the references for the replacement procedures of permanent installed parts.**

IPL FIG. ITEM	COMPONENT PART NAME	IPL FIG. ITEM	REPLACEMENT PART NAME	SEE REPAIR TASK
48D-001 48D-210	Side Wall Post Assembly	48D-230	Nut	Replacement of the Riveted Parts
48D-001 48D-210	Side Wall Post Assembly	48D-235	Nut	Replacement of the Riveted Parts

Table 3723
Reference list for the replacement of permanent installed parts

(a) Remove and disassemble the handle assembly 48D-270 as follows:

1 Remove the security pins 48D-290 from the handle assembly 48D-270.

2 Remove the handle assembly 48D-270 from the aft side wall assembly 48D-010.

3 Remove the bushings 48D-305 from the aft side wall assembly 48D-010.

4 Remove the special screws 48D-280 and the special washers 48D-300 from the aft side wall assembly 48D-010.

(b) Remove the screws 48D-245, the washers 48D-190 and the support 48D-310 from the aft side wall assembly 48D-010.

(c) Remove the toilet seat cover dispenser 48D-330 from the screws 48D-340.

(d) Remove the screws 48D-340 from the aft side wall assembly 48D-010.

(e) Remove the studs 48D-200 from the oxygen container assy 48D-120.

(f) Remove the screws 48D-140, the nuts 48D-150 and the cover oxygen container assy 48D-120 from the angle 48D-130.

(g) Remove the screws 48D-180, the washers 48D-190 and the angle 48D-130 from the aft side wall assembly 48D-010.

(h) Remove the ground cable from the oxygen container assy 48D-170.

(i) Remove the screws 48D-180, 48D-187, the washers 48D-190 and the oxygen container assy 48D-170 from the angles 48D-160.

(j) Remove the screws 48D-180, the washers 48D-190 and the angles 48D-160 from the aft side wall assembly 48D-010.

(k) Remove the screws 48D-240, the washers 48D-190 and the angle 48D-320 from the aft side wall assembly 48D-010.

(l) Remove the screws 48D-420 and the single door emergency unlocking device assembly 48D-350 from the post assembly 48D-210.

(m) Disassemble the single door emergency unlocking device assembly 48D-350 as follows:

WARNING: BE CAREFUL WHEN YOU USE MATERIAL NO. 08-007 SEALANT, HIGH TEMPERATURE. OBEY THE MATERIAL MANUFACTURER'S INSTRUCTIONS.

1 Remove the bolt 48D-410 and the emergency unlocking device strike 48D-370 from the emergency unlocking device housing 48D-360.

NOTE: If necessary use a hot air blower to heat up the Material No. 08-007 Sealant, High Temperature to remove the bolt 48D-410.

WARNING: BE CAREFUL WHEN YOU USE MATERIAL NO. 08-007 SEALANT, HIGH TEMPERATURE. OBEY THE MATERIAL MANUFACTURER'S INSTRUCTIONS.

2 Remove the pin 48D-390, the snap catch 48D-400 and the emergency unlocking device pivot 48D-380 from the emergency unlocking device housing 48D-360.

NOTE: If necessary use a hot air blower to heat up the Material No. 08-007 Sealant, High Temperature to remove the snap catch 48D-400 and the pin 48D-390.

(n) Remove the caps 48D-250, the screws 48D-240, 48D-260, the washers 48D-190 and the post assembly 48D-210.

(o) Disassemble the post assembly 48D-210 as follows:

1 Remove the screws 48D-220 and the plates 48D-215.

2 Remove the screws 48D-225 and the plates 48D-217.

(p) Remove the screws 48D-030, 48D-035 and the fittings 48D-020, 48D-025 from the aft side wall assembly 48D-010.

SUB TASK 25-41-51-010-110-E01
D2549020805200 D2549030407800 D2549030409800

5. Removal of the Side Wall (48D-1)

NOTE: **See TABLE 3724 for the references for the replacement procedures of permanent installed parts.**

IPL FIG. ITEM	COMPONENT PART NAME	IPL FIG. ITEM	REPLACEMENT PART NAME	SEE REPAIR TASK
48D-001 48D-210	Side Wall Post Assembly	48D-230	Nut	TBD

Table 3724
Reference list for the replacement of permanent installed parts

(a) Remove and disassemble the handle assembly 48D-270 as follows:

1 Remove the security pins 48D-290 from the handle assembly 48D-270.

2 Remove the handle assembly 48D-270 from the aft side wall assembly 48D-010.

3 Remove the bushing 48D-305 from the aft side wall assembly 48D-010.

4 Remove the special screws 48D-280 and the special washers 48D-300 from the aft side wall assembly 48D-010.

(b) Remove the screws 48D-245, the washers 48D-190 and the support 48D-310 from the aft side wall assembly 48D-010.

(c) Remove the studs 48D-200 from the oxygen container assy 48D-120.

(d) Remove the screws 48D-140, the nuts 48D-150 and the cover oxygen container assy 48D-120 from the angle 48D-130.

(e) Remove the screws 48D-180, the washers 48D-190 and the angle 48D-130 from the aft side wall assembly 48D-010.

(f) Remove the ground cable from the oxygen container assy 48D-170.

(g) Remove the screws 48D-180, the washers 48D-190 and the oxygen container assy 48D-170 from the angles 48D-160.

(h) Remove the screws 48D-180, the washers 48D-190 and the angles 48D-160 from the aft side wall assembly 48D-010.

(i) Remove the screws 48D-240, the washers 48D-190 and the angle 48D-320 from the aft side wall assembly 48D-010.

(j) Remove the caps 48D-250, the screws 48D-240, 48D-260, the washers 48D-190 and the post assembly 48D-210.

(k) Disassemble the post assembly 48D-210 as follows:

1 Remove the screws 48D-220 and the plates 48D-215.

(l) Remove the screws 48D-030, 48D-035 and the fittings 48D-020, 48D-025 from the aft side wall assembly 48D-010.

SUB TASK 25-41-51-010-110-F01
D2547161903000

6. Removal of the Side Wall (48D-1)

NOTE: **See TABLE 3725 for the references for the replacement procedures of permanent installed parts.**

IPL FIG. ITEM	COMPONENT PART NAME	IPL FIG. ITEM	REPLACEMENT PART NAME	SEE REPAIR TASK
48D-001 48D-210	Side Wall Post Assembly	48D-230	Nut	TBD

Table 3725
Reference list for the replacement of permanent installed parts

(a) Remove and disassemble the handle assembly 48D-270 as follows:

1 Remove the security pins 48D-290 from the handle assembly 48D-270.

2 Remove the handle assembly 48D-270 from the aft side wall assembly 48D-010.

3 Remove the bushing 48D-305 from the aft side wall assembly 48D-010.

4 Remove the special screws 48D-280 and the special washers 48D-300 from the aft side wall assembly 48D-010.

(b) Remove the screws 48D-245, the washers 48D-190 and the support 48D-310 from the aft side wall assembly 48D-010.

(c) Remove the toilet seat cover dispenser 48D-330 from the screws 48D-340.

(d) Remove the screws 48D-340 from the aft side wall assembly 48D-010.

(e) Remove the studs 48D-200 from the oxygen container assy 48D-120.

(f) Remove the screws 48D-140, the nuts 48D-150 and the cover oxygen container assy 48D-120 from the angle 48D-130.

(g) Remove the screws 48D-180, the washers 48D-190 and the angle 48D-130 from the aft side wall assembly 48D-010.

(h) Remove the ground cable from the oxygen container assy 48D-170.

(i) Remove the screws 48D-180, the washers 48D-190 and the oxygen container assy 48D-170 from the angles 48D-160.

(j) Remove the screws 48D-180, the washers 48D-190 and the angles 48D-160 from the aft side wall assembly 48D-010.

(k) Remove the screws 48D-240 and the washers 48D-190 from the aft side wall assembly 48D-010.

(l) Remove the caps 48D-250, the screws 48D-240, 48D-260, the washers 48D-190 and the post assembly 48D-210.

(m) Disassemble the post assembly 48D-210 as follows:

1 Remove the screws 48D-220 and the plates 48D-215.

(n) Remove the screws 48D-030, 48D-035 and the fittings 48D-020, 48D-025 from the aft side wall assembly 48D-010.

SUB TASK 25-41-51-010-110-G01
D2549020807200

7. Removal of the Side Wall (48D-1)

NOTE: **See TABLE 3726 for the references for the replacement procedures of permanent installed parts.**

IPL FIG. ITEM	COMPONENT PART NAME	IPL FIG. ITEM	REPLACEMENT PART NAME	SEE REPAIR TASK/ SPM REFERENCE
48D-001 48D-210	Side Wall Post Assembly	48D-230	Nut	Replacement of the Riveted Parts
48D-001 48D-210	Side Wall Post Assembly	48D-235	Nut	Replacement of the Riveted Parts
48D-001 48D-450	Side Wall Mirror Assembly	48D-460 48D-470 48D-510	Mirror Mirror Panel Adhesive Film	SPM 25-00-01

Table 3726
Reference list for the replacement of permanent installed parts

(a) Remove the stud 48D-550 from the aft side wall assembly 48D-010.

(b) Remove the mirror assembly 48D-450 from the screws 48D-540.

(c) Remove the screws 48D-540 from the aft side wall assembly 48D-010.

(d) Remove the screws 48D-480 and the washers 48D-490 from the mirror assembly 48D-450.

(e) Remove the screws 48D-530 and the section 48D-520 from the aft side wall assembly 48D-010.

(f) Remove and disassemble the handle assembly 48D-270 as follows:

1 Remove the security pins 48D-290 from the handle assembly 48D-270.

2 Remove the handle assembly 48D-270 from the aft side wall assembly 48D-010.

3 Remove the bushing 48D-305 from the aft side wall assembly 48D-010.

4 Remove the special screws 48D-280 and the special washers 48D-300 from the aft side wall assembly 48D-010.

(g) Remove the screws 48D-245, the washers 48D-190 and the support 48D-310 from the aft side wall assembly 48D-010.

(h) Remove the toilet seat cover dispenser 48D-330 from the screws 48D-340.

(i) Remove the screws 48D-340 from the aft side wall assembly 48D-010.

(j) Remove the studs 48D-200 from the oxygen container assy 48D-120.

(k) Remove the screws 48D-140, the nuts 48D-150 and the cover oxygen container assy 48D-120 from the angle 48D-130.

(l) Remove the screws 48D-180, the washers 48D-190 and the angle 48D-130 from the aft side wall assembly 48D-010.

(m) Remove the ground cable from the oxygen container assy 48D-170.

(n) Remove the screws 48D-180, the washers 48D-190 and the oxygen container assy 48D-170 from the angles 48D-160.

(o) Remove the screws 48D-180, the washers 48D-190 and the angles 48D-160 from the aft side wall assembly 48D-010.

(p) Remove the screws 48D-240, the washers 48D-190 and the angle 48D-320 from the aft side wall assembly 48D-010.

(q) Remove the screws 48D-420 and the single door emergency unlocking device assembly 48D-350 from the post assembly 48D-210.

(r) Disassemble the single door emergency unlocking device assembly 48D-350 as follows:

WARNING: **BE CAREFUL WHEN YOU USE MATERIAL NO. 08-007 SEALANT, HIGH TEMPERATURE. OBEY THE MATERIAL MANUFACTURER'S INSTRUCTIONS.**

1 Remove the bolt 48D-410 and the emergency unlocking device strike 48D-370 from the emergency unlocking device housing 48D-360.

NOTE: **If necessary use a hot air blower to heat up the Material No. 08-007 Sealant, High Temperature to remove the bolt 48D-410.**

WARNING: **BE CAREFUL WHEN YOU USE MATERIAL NO. 08-007 SEALANT, HIGH TEMPERATURE. OBEY THE MATERIAL MANUFACTURER'S INSTRUCTIONS.**

2 Remove the pin 48D-390, the snap catch 48D-400 and the emergency unlocking device pivot 48D-380 from the emergency unlocking device housing 48D-360.

NOTE: **If necessary use a hot air blower to heat up the Material No. 08-007 Sealant, High Temperature to remove the snap catch 48D-400 and the pin 48D-390.**

(s) Remove the caps 48D-250, the screws 48D-240, 48D-260, the washers 48D-190 and the post assembly 48D-210.

(t) Disassemble the post assembly 48D-210 as follows:

1 Remove the screws 48D-220 and the plates 48D-215.

2 Remove the screws 48D-225 and the plates 48D-217.

(u) Remove the screws 48D-030, 48D-035 and the fittings 48D-020, 48D-025 from the aft side wall assembly 48D-010.

TASK 25-41-51-000-825-G01
D2549010501000 D2549010504200 D2549010504400 D2549010504800 D2549010507400 D2549010509000 D2549010511200 D2549010512600 D2549010513200 D2549010514200 D2549010601000 D2549010601800 D2549010604000 D2549020503400 D2549020505400 D2549020505800 D2549020601200 D2549020603200 D2549020608800 D2549020706400 D2549030500200 D2549030501600 D2549030502200 D2549030503200 D2549030509000 R225401107-000 R225401107-002

243. Removal of the Side Wall

A. General

A complete disassembly of the component is not necessary and not recommended.

Do not disassemble the component more than it is necessary for:

- Cleaning
- Visual Inspection
- Replacement of defective parts.

B. Job Set-up Information
(1) Consumable Materials

REFERENCE	DESIGNATION
08-007	Sealant, High Temperature

Table 3727
Consumable Materials

(2) Fixtures, Tools, Test and Support Equipment

REFERENCE	DESIGNATION
	hot air blower

Table 3728
Fixtures, Tools, Test and Support Equipment

C. Procedure

WARNING: **BE CAREFUL WHEN YOU USE SOLVENTS/CLEANING AGENTS, SEALANTS AND OTHER MATERIALS. OBEY THE MATERIAL MANUFACTURER'S INSTRUCTIONS AND THE LOCAL REGULATIONS. MAKE SURE THAT THERE IS A GOOD FLOW OF AIR THROUGH THE WORK AREA. DO NOT BREATHE THE FUMES. DO NOT SMOKE. DO NOT USE THESE MATERIALS NEAR A FLAME, SPARKS OR SOURCES OF HEAT. USE PROTECTIVE CLOTHING, GOGGLES AND GLOVES. IF YOU GET ONE OF THESE MATERIALS ON YOUR SKIN OR IN YOUR EYES, FLUSH IT AWAY WITH A FLOW OF CLEAN WATER. IF YOU GET ONE OF THESE MATERIALS IN YOUR MOUTH, GET IMMEDIATE MEDICAL AID. IN GENERAL, THESE MATERIALS ARE POISONOUS, FLAMMABLE AND SKIN IRRITANTS.**

WARNING: **KEEP ALL HYDROCARBONS (FUELS, LUBRICANTS, ETC.) AWAY FROM ALL SOURCES OF OXYGEN. OXYGEN BECOMES EXPLOSIVE WHEN IT TOUCHES HYDROCARBONS.**

WARNING: **TO PREVENT CONTAMINATION OF THE OXYGEN SYSTEM, MAKE SURE THAT YOUR HANDS AND ALL THE TOOLS ARE CLEAN.**

CAUTION: **PUT DRY, CLEAN, METAL OR PLASTIC PLUGS ON ALL PIPES OR UNITS REMOVED TEMPORARILY. PUT EACH PIPE OR UNIT IN A SEALED VINYL BAG. UNWANTED MATERIALS IN THE OXYGEN SYSTEM CAN DAMAGE THE SYSTEM.**

CAUTION: **DO ALL THE WORK ON A CLEAN, SOFT SURFACE TO PREVENT DAMAGE TO THE COMPONENTS.**

SUB TASK 25-41-51-010-111-A01
D2549010509000 D2549010513200 D2549010601000 D2549010604000

1. Removal of the Side Wall (48E-1)

NOTE: **See TABLE 3729 for the references for the replacement procedures of permanent installed parts.**

IPL FIG. ITEM	COMPONENT PART NAME	IPL FIG. ITEM	REPLACEMENT PART NAME	SEE REPAIR TASK
48E-001 48E-270	Side Wall Post Assembly	48E-290	Nut	TBD

Table 3729
Reference list for the replacement of permanent installed parts

(a) Remove and disassemble the handle assembly 48E-140 as follows:

1 Remove the security pins 48E-160 from the handle assembly 48E-140.

2 Remove the handle assembly 48E-140 from the aft side wall assembly 48E-010.

3 Remove the special screws 48E-150 and the special washers 48E-170 from the aft side wall assembly 48E-010.

(b) Remove the screws 48E-490, the washers 48E-500 and the support 48E-480 from the aft side wall assembly 48E-010.

(c) Remove the studs 48E-260 and the washers 48E-250 from the cover oxygen container assy 48E-180.

(d) Remove the screws 48E-200, the nuts 48E-210 and the cover oxygen container assy 48E-180 from the angle 48E-190.

(e) Remove the screws 48E-240, the washers 48E-250 and the angle 48E-190 from the aft side wall assembly 48E-010.

(f) Remove the ground cable from the oxygen container assy 48E-230.

(g) Remove the screws 48E-240, the washers 48E-250 and the oxygen container assy 48E-230 from the angles 48E-220.

(h) Remove the screws 48E-240, the washers 48E-250 and the angles 48E-220 from the aft side wall assembly 48E-010.

(i) Remove the screws 48E-340, 48E-350, the washers 48E-250 and the angle 48E-330 from the aft side wall assembly 48E-010.

(j) Remove the screws 48E-460, 48E-461, the nuts 48E-470, the plates 48E-450 and the single door emergency unlocking device assembly 48E-380 from the post assembly 48E-270.

(k) Disassemble the single door emergency unlocking device assembly 48E-380 as follows:

WARNING: **BE CAREFUL WHEN YOU USE MATERIAL NO. 08-007 SEALANT, HIGH TEMPERATURE. OBEY THE MATERIAL MANUFACTURER'S INSTRUCTIONS.**

1 Remove the bolt 48E-440 and the emergency unlocking device strike 48E-400 from the emergency unlocking device housing 48E-390.

NOTE: **If necessary use a hot air blower to heat up the Material No. 08-007 Sealant, High Temperature to remove the bolt 48E-440.**

WARNING: **BE CAREFUL WHEN YOU USE MATERIAL NO. 08-007 SEALANT, HIGH TEMPERATURE. OBEY THE MATERIAL MANUFACTURER'S INSTRUCTIONS.**

2 Remove the pin 48E-420, the snap catch 48E-430 and the emergency unlocking device pivot 48E-410 from the emergency unlocking device housing 48E-390.

NOTE: **If necessary use a hot air blower to heat up the Material No. 08-007 Sealant, High Temperature to remove the snap catch 48E-430 and the pin 48E-420.**

(l) Remove the caps 48E-310, the screws 48E-300, 48E-320, the washers 48E-250 and the post assembly 48E-270.

(m) Disassemble the post assembly 48E-270 as follows:

1 Remove the screws 48E-280.

(n) Remove the screws 48E-040, 48E-050 and the fittings 48E-020, 48E-030 from the aft side wall assembly 48E-010.

SUB TASK 25-41-51-010-111-B01
D2549010514200 D2549020603200 D2549020706400

2. Removal of the Side Wall (48E-1)

NOTE: **See TABLE 3730 for the references for the replacement procedures of permanent installed parts.**

IPL FIG. ITEM	COMPONENT PART NAME	IPL FIG. ITEM	REPLACEMENT PART NAME	SEE REPAIR TASK
48E-001 48E-270	Side Wall Post Assembly	48E-290	Nut	TBD

Table 3730
Reference list for the replacement of permanent installed parts

(a) Remove and disassemble the handle assembly 48E-140 as follows:

1 Remove the security pins 48E-160 from the handle assembly 48E-140.

2 Remove the handle assembly 48E-140 from the aft side wall assembly 48E-010.

3 Remove the special screws 48E-150 and the special washers 48E-170 from the aft side wall assembly 48E-010.

(b) Remove the toilet seat cover dispenser 48E-360 from the screws 48E-370.

(c) Remove the screws 48E-370 from the aft side wall assembly 48E-010.

(d) Remove the studs 48E-260 and the washers 48E-250 from the cover oxygen container assy 48E-180.

(e) Remove the screws 48E-200, the nuts 48E-210 and the cover oxygen container assy 48E-180 from the angle 48E-190.

(f) Remove the screws 48E-240, the washers 48E-250 and the angle 48E-190 from the aft side wall assembly 48E-010.

(g) Remove the ground cable from the oxygen container assy 48E-230.

(h) Remove the screws 48E-240, the washers 48E-250 and the oxygen container assy 48E-230 from the angles 48E-220.

(i) Remove the screws 48E-240, the washers 48E-250 and the angles 48E-220 from the aft side wall assembly 48E-010.

(j) Remove the screws 48E-340, 48E-350, the washers 48E-250 and the angle 48E-330 from the aft side wall assembly 48E-010.

(k) Remove the screws 48E-460, 48E-461, the nuts 48E-470, the plates 48E-450 and the single door emergency unlocking device assembly 48E-380 from the post assembly 48E-270.

(l) Disassemble the single door emergency unlocking device assembly 48E-380 as follows:

WARNING: BE CAREFUL WHEN YOU USE MATERIAL NO. 08-007 SEALANT, HIGH TEMPERATURE. OBEY THE MATERIAL MANUFACTURER'S INSTRUCTIONS.

1 Remove the bolt 48E-440 and the emergency unlocking device strike 48E-400 from the emergency unlocking device housing 48E-390.

NOTE: If necessary use a hot air blower to heat up the Material No. 08-007 Sealant, High Temperature to remove the bolt 48E-440.

WARNING: BE CAREFUL WHEN YOU USE MATERIAL NO. 08-007 SEALANT, HIGH TEMPERATURE. OBEY THE MATERIAL MANUFACTURER'S INSTRUCTIONS.

2 Remove the pin 48E-420, the snap catch 48E-430 and the emergency unlocking device pivot 48E-410 from the emergency unlocking device housing 48E-390.

NOTE: If necessary use a hot air blower to heat up the Material No. 08-007 Sealant, High Temperature to remove the snap catch 48E-430 and the pin 48E-420.

(m) Remove the caps 48E-310, the screws 48E-300, 48E-320, the washers 48E-250 and the post assembly 48E-270.

(n) Disassemble the post assembly 48E-270 as follows:

1 Remove the screws 48E-280.

(o) Remove the screws 48E-040, 48E-050 and the fittings 48E-020, 48E-030 from the aft side wall assembly 48E-010.

SUB TASK 25-41-51-010-111-C01
D2549020608800

3. Removal of the Side Wall (48E-1)

NOTE: **See TABLE 3731 for the references for the replacement procedures of permanent installed parts.**

IPL FIG. ITEM	COMPONENT PART NAME	IPL FIG. ITEM	REPLACEMENT PART NAME	SEE REPAIR TASK
48E-001 48E-270	Side Wall Post Assembly	48E-290	Nut	TBD

Table 3731
Reference list for the replacement of permanent installed parts

(a) Remove and disassemble the handle assembly 48E-140 as follows:

1 Remove the security pins 48E-160 from the handle assembly 48E-140.

2 Remove the handle assembly 48E-140 from the aft side wall assembly 48E-010.

3 Remove the special screws 48E-150 and the special washers 48E-170 from the aft side wall assembly 48E-010.

(b) Remove the toilet seat cover dispenser 48E-360 from the screws 48E-370.

(c) Remove the screws 48E-370 from the aft side wall assembly 48E-010.

(d) Remove the studs 48E-260 and the washers 48E-250 from the cover oxygen container assy 48E-180.

(e) Remove the screws 48E-200, the nuts 48E-210 and the cover oxygen container assy 48E-180 from the angle 48E-190.

(f) Remove the screws 48E-240, the washers 48E-250 and the angle 48E-190 from the aft side wall assembly 48E-010.

(g) Remove the ground cable from the oxygen container assy 48E-230.

(h) Remove the screws 48E-240, the washers 48E-250 and the oxygen container assy 48E-230 from the angles 48E-220.

(i) Remove the screws 48E-240, the washers 48E-250 and the angles 48E-220 from the aft side wall assembly 48E-010.

(j) Remove the screws 48E-340, 48E-350, the washers 48E-250 and the angle 48E-330 from the aft side wall assembly 48E-010.

(k) Remove the caps 48E-310, the screws 48E-300, 48E-320, the washers 48E-250 and the post assembly 48E-270.

(l) Disassemble the post assembly 48E-270 as follows:

1 Remove the screws 48E-280.

(m) Remove the screws 48E-040, 48E-050 and the fittings 48E-020, 48E-030 from the aft side wall assembly 48E-010.

(n) If necessary, remove the kick strip 48E-520 from the aft side wall assembly 48E-010.

SUB TASK 25-41-51-010-111-D01
D2549020601200

4. Removal of the Side Wall (48E-1)

NOTE: **See TABLE 3732 for the references for the replacement procedures of permanent installed parts.**

IPL FIG. ITEM	COMPONENT PART NAME	IPL FIG. ITEM	REPLACEMENT PART NAME	SEE REPAIR TASK
48E-001 48E-270	Side Wall Post Assembly	48E-290	Nut	TBD

Table 3732
Reference list for the replacement of permanent installed parts

(a) Remove and disassemble the handle assembly 48E-140 as follows:

1 Remove the security pins 48E-160 from the handle assembly 48E-140.

2 Remove the handle assembly 48E-140 from the aft side wall assembly 48E-010.

3 Remove the special screws 48E-150 and the special washers 48E-170 from the aft side wall assembly 48E-010.

(b) Remove the toilet seat cover dispenser 48E-360 from the screws 48E-370.

(c) Remove the screws 48E-370 from the aft side wall assembly 48E-010.

(d) Remove the studs 48E-260 and the washers 48E-250 from the cover oxygen container assy 48E-180.

(e) Remove the screws 48E-200, the nuts 48E-210 and the cover oxygen container assy 48E-180 from the angle 48E-190.

(f) Remove the screws 48E-240, the washers 48E-250 and the angle 48E-190 from the aft side wall assembly 48E-010.

(g) Remove the ground cable from the oxygen container assy 48E-230.

(h) Remove the screws 48E-240, the washers 48E-250 and the oxygen container assy 48E-230 from the angles 48E-220.

(i) Remove the screws 48E-240, the washers 48E-250 and the angles 48E-220 from the aft side wall assembly 48E-010.

(j) Remove the screws 48E-340, 48E-350, the washers 48E-250 and the angle 48E-330 from the aft side wall assembly 48E-010.

(k) Remove the caps 48E-310, the screws 48E-300, 48E-320, the washers 48E-250 and the post assembly 48E-270.

(l) Disassemble the post assembly 48E-270 as follows:

1 Remove the screws 48E-280.

(m) Remove the screws 48E-040, 48E-050 and the fittings 48E-020, 48E-030 from the aft side wall assembly 48E-010.

SUB TASK 25-41-51-010-111-E01
D2549010504200

5. Removal of the Side Wall (48E-1)

NOTE: **See TABLE 3733 for the references for the replacement procedures of permanent installed parts.**

IPL FIG. ITEM	COMPONENT PART NAME	IPL FIG. ITEM	REPLACEMENT PART NAME	SEE REPAIR TASK
48E-001 48E-270	Side Wall Post Assembly	48E-290	Nut	TBD

Table 3733
Reference list for the replacement of permanent installed parts

(a) Remove and disassemble the handle assembly 48E-140 as follows:

1 Remove the security pins 48E-160 from the handle assembly 48E-140.

2 Remove the handle assembly 48E-140 from the aft side wall assembly 48E-010.

3 Remove the special screws 48E-150 and the special washers 48E-170 from the aft side wall assembly 48E-010.

(b) Remove the studs 48E-260 and the washers 48E-250 from the cover oxygen container assy 48E-180.

(c) Remove the screws 48E-200, the nuts 48E-210 and the cover oxygen container assy 48E-180 from the angle 48E-190.

(d) Remove the screws 48E-240, the washers 48E-250 and the angle 48E-190 from the aft side wall assembly 48E-010.

(e) Remove the ground cable from the oxygen container assy 48E-230.

(f) Remove the screws 48E-240, the washers 48E-250 and the oxygen container assy 48E-230 from the angles 48E-220.

(g) Remove the screws 48E-240, the washers 48E-250 and the angles 48E-220 from the aft side wall assembly 48E-010.

(h) Remove the screws 48E-340, 48E-350, the washers 48E-250 and the angle 48E-330 from the aft side wall assembly 48E-010.

(i) Remove the screws 48E-460, 48E-461, the nuts 48E-470, the plates 48E-450 and the single door emergency unlocking device assembly 48E-380 from the post assembly 48E-270.

(j) Disassemble the single door emergency unlocking device assembly 48E-380 as follows:

WARNING: BE CAREFUL WHEN YOU USE MATERIAL NO. 08-007 SEALANT, HIGH TEMPERATURE. OBEY THE MATERIAL MANUFACTURER'S INSTRUCTIONS.

1 Remove the bolt 48E-440 and the emergency unlocking device strike 48E-400 from the emergency unlocking device housing 48E-390.

NOTE: If necessary use a hot air blower to heat up the Material No. 08-007 Sealant, High Temperature to remove the bolt 48E-440.

WARNING: BE CAREFUL WHEN YOU USE MATERIAL NO. 08-007 SEALANT, HIGH TEMPERATURE. OBEY THE MATERIAL MANUFACTURER'S INSTRUCTIONS.

2 Remove the pin 48E-420, the snap catch 48E-430 and the emergency unlocking device pivot 48E-410 from the emergency unlocking device housing 48E-390.

NOTE: If necessary use a hot air blower to heat up the Material No. 08-007 Sealant, High Temperature to remove the snap catch 48E-430 and the pin 48E-420.

(k) Remove the caps 48E-310, the screws 48E-300, 48E-320, the washers 48E-250 and the post assembly 48E-270.

(l) Disassemble the post assembly 48E-270 as follows:

1 Remove the screws 48E-280.

(m) Remove the screws 48E-040, 48E-050 and the fittings 48E-020, 48E-030 from the aft side wall assembly 48E-010.

SUB TASK 25-41-51-010-111-F01
D2549010504800

6. Removal of the Side Wall (48E-1)

NOTE: **See TABLE 3734 for the references for the replacement procedures of permanent installed parts.**

IPL FIG. ITEM	COMPONENT PART NAME	IPL FIG. ITEM	REPLACEMENT PART NAME	SEE REPAIR TASK
48E-001 48E-270	Side Wall Post Assembly	48E-290	Nut	TBD

Table 3734
Reference list for the replacement of permanent installed parts

(a) Remove and disassemble the handle assembly 48E-140 as follows:

1 Remove the security pins 48E-160 from the handle assembly 48E-140.

2 Remove the handle assembly 48E-140 from the aft side wall assembly 48E-010.

3 Remove the special screws 48E-150 and the special washers 48E-170 from the aft side wall assembly 48E-010.

(b) Remove the studs 48E-260 and the washers 48E-250 from the cover oxygen container assy 48E-180.

(c) Remove the screws 48E-200, the nuts 48E-210 and the cover oxygen container assy 48E-180 from the angle 48E-190.

(d) Remove the screws 48E-240, the washers 48E-250 and the angle 48E-190 from the aft side wall assembly 48E-010.

(e) Remove the ground cable from the oxygen container assy 48E-230.

(f) Remove the screws 48E-240, the washers 48E-250 and the oxygen container assy 48E-230 from the angles 48E-220.

(g) Remove the screws 48E-240, the washers 48E-250 and the angles 48E-220 from the aft side wall assembly 48E-010.

(h) Remove the screws 48E-340, 48E-350, the washers 48E-250 and the angle 48E-330 from the aft side wall assembly 48E-010.

(i) Remove the screws 48E-460, 48E-461, the nuts 48E-470, the plates 48E-450 and the single door emergency unlocking device assembly 48E-380 from the post assembly 48E-270.

(j) Disassemble the single door emergency unlocking device assembly 48E-380 as follows:

WARNING: BE CAREFUL WHEN YOU USE MATERIAL NO. 08-007 SEALANT, HIGH TEMPERATURE. OBEY THE MATERIAL MANUFACTURER'S INSTRUCTIONS.

1 Remove the bolt 48E-440 and the emergency unlocking device strike 48E-400 from the emergency unlocking device housing 48E-390.

NOTE: If necessary use a hot air blower to heat up the Material No. 08-007 Sealant, High Temperature to remove the bolt 48E-440.

WARNING: BE CAREFUL WHEN YOU USE MATERIAL NO. 08-007 SEALANT, HIGH TEMPERATURE. OBEY THE MATERIAL MANUFACTURER'S INSTRUCTIONS.

2 Remove the pin 48E-420, the snap catch 48E-430 and the emergency unlocking device pivot 48E-410 from the emergency unlocking device housing 48E-390.

NOTE: If necessary use a hot air blower to heat up the Material No. 08-007 Sealant, High Temperature to remove the snap catch 48E-430 and the pin 48E-420.

(k) Remove the caps 48E-310, the screws 48E-300, 48E-320, the washers 48E-250 and the post assembly 48E-270.

(l) Disassemble the post assembly 48E-270 as follows:

1 Remove the screws 48E-280.

(m) Remove the screws 48E-040, 48E-050 and the fittings 48E-020, 48E-030 from the aft side wall assembly 48E-010.

SUB TASK 25-41-51-010-111-G01

D2549010501000 D2549010512600 D2549010601800 D2549020503400 D2549020505400 D2549020505800 D2549030500200 D2549030501600 D2549030502200 D2549030503200 D2549030509000 R225401107-000

7. Removal of the Side Wall (48E-1)

NOTE: **See TABLE 3735 for the references for the replacement procedures of permanent installed parts.**

IPL FIG. ITEM	COMPONENT PART NAME	IPL FIG. ITEM	REPLACEMENT PART NAME	SEE REPAIR TASK
48E-001 48E-270	Side Wall Post Assembly	48E-290	Nut	Replacement of the Riveted Parts

Table 3735
Reference list for the replacement of permanent installed parts

(a) Remove and disassemble the handle assembly 48E-140 as follows:

1 Remove the security pins 48E-160 from the handle assembly 48E-140.

2 Remove the handle assembly 48E-140 from the aft side wall assembly 48E-010.

3 Remove the special screws 48E-150 and the special washers 48E-170 from the aft side wall assembly 48E-010.

(b) Remove the studs 48E-260 and the washers 48E-250 from the cover oxygen container assy 48E-180.

(c) Remove the screws 48E-200, the nuts 48E-210 and the cover oxygen container assy 48E-180 from the angle 48E-190.

(d) Remove the screws 48E-240, the washers 48E-250 and the angle 48E-190 from the aft side wall assembly 48E-010.

(e) Remove the ground cable from the oxygen container assy 48E-230.

(f) Remove the screws 48E-240, the washers 48E-250 and the oxygen container assy 48E-230 from the angles 48E-220.

(g) Remove the screws 48E-240, the washers 48E-250 and the angles 48E-220 from the aft side wall assembly 48E-010.

(h) Remove the screws 48E-340, 48E-350, the washers 48E-250 and the angle 48E-330 from the aft side wall assembly 48E-010.

(i) Remove the screws 48E-460, 48E-461, the nuts 48E-470, the plates 48E-450 and the single door emergency unlocking device assembly 48E-380 from the post assembly 48E-270.

(j) Disassemble the single door emergency unlocking device assembly 48E-380 as follows:

WARNING: BE CAREFUL WHEN YOU USE MATERIAL NO. 08-007 SEALANT, HIGH TEMPERATURE. OBEY THE MATERIAL MANUFACTURER'S INSTRUCTIONS.

1 Remove the bolt 48E-440 and the emergency unlocking device strike 48E-400 from the emergency unlocking device housing 48E-390.

NOTE: If necessary use a hot air blower to heat up the Material No. 08-007 Sealant, High Temperature to remove the bolt 48E-440.

WARNING: BE CAREFUL WHEN YOU USE MATERIAL NO. 08-007 SEALANT, HIGH TEMPERATURE. OBEY THE MATERIAL MANUFACTURER'S INSTRUCTIONS.

2 Remove the pin 48E-420, the snap catch 48E-430 and the emergency unlocking device pivot 48E-410 from the emergency unlocking device housing 48E-390.

NOTE: If necessary use a hot air blower to heat up the Material No. 08-007 Sealant, High Temperature to remove the snap catch 48E-430 and the pin 48E-420.

(k) Remove the caps 48E-310, the screws 48E-300, 48E-320, the washers 48E-250 and the post assembly 48E-270.

(l) Disassemble the post assembly 48E-270 as follows:

1 Remove the screws 48E-280.

(m) Remove the screws 48E-040, 48E-050 and the fittings 48E-020, 48E-030 from the aft side wall assembly 48E-010.

SUB TASK 25-41-51-010-111-H01
D2549010511200 R225401107-002

8. Removal of the Side Wall (48E-1)

NOTE: **See TABLE 3736 for the references for the replacement procedures of permanent installed parts.**

IPL FIG. ITEM	COMPONENT PART NAME	IPL FIG. ITEM	REPLACEMENT PART NAME	SEE REPAIR TASK
48E-001 48E-270	Side Wall Post Assembly	48E-290	Nut	TBD

Table 3736
Reference list for the replacement of permanent installed parts

(a) Remove and disassemble the handle assembly 48E-140 as follows:

1 Remove the security pins 48E-160 from the handle assembly 48E-140.

2 Remove the handle assembly 48E-140 from the aft side wall assembly 48E-010.

3 Remove the special screws 48E-150 and the special washers 48E-170 from the aft side wall assembly 48E-010.

(b) Remove the studs 48E-260 and the washers 48E-250 from the cover oxygen container assy 48E-180.

(c) Remove the screws 48E-200, the nuts 48E-210 and the cover oxygen container assy 48E-180 from the angle 48E-190.

(d) Remove the screws 48E-240, the washers 48E-250 and the angle 48E-190 from the aft side wall assembly 48E-010.

(e) Remove the ground cable from the oxygen container assy 48E-230.

(f) Remove the screws 48E-240, 48E-245, the washers 48E-250, 48E-255, and the oxygen container assy 48E-230 from the angles 48E-220.

(g) Remove the screws 48E-240, the washers 48E-250 and the angles 48E-220 from the aft side wall assembly 48E-010.

(h) Remove the screws 48E-340, 48E-350, the washers 48E-250 and the angle 48E-330 from the aft side wall assembly 48E-010.

(i) Remove the screws 48E-460, 48E-461, the nuts 48E-470, the plates 48E-450 and the single door emergency unlocking device assembly 48E-380 from the post assembly 48E-270.

(j) Disassemble the single door emergency unlocking device assembly 48E-380 as follows:

WARNING: BE CAREFUL WHEN YOU USE MATERIAL NO. 08-007 SEALANT, HIGH TEMPERATURE. OBEY THE MATERIAL MANUFACTURER'S INSTRUCTIONS.

1 Remove the bolt 48E-440 and the emergency unlocking device strike 48E-400 from the emergency unlocking device housing 48E-390.

NOTE: If necessary use a hot air blower to heat up the Material No. 08-007 Sealant, High Temperature to remove the bolt 48E-440.

WARNING: BE CAREFUL WHEN YOU USE MATERIAL NO. 08-007 SEALANT, HIGH TEMPERATURE. OBEY THE MATERIAL MANUFACTURER'S INSTRUCTIONS.

2 Remove the pin 48E-420, the snap catch 48E-430 and the emergency unlocking device pivot 48E-410 from the emergency unlocking device housing 48E-390.

NOTE: If necessary use a hot air blower to heat up the Material No. 08-007 Sealant, High Temperature to remove the snap catch 48E-430 and the pin 48E-420.

(k) Remove the caps 48E-310, the screws 48E-300, 48E-320, the washers 48E-250 and the post assembly 48E-270.

(l) Disassemble the post assembly 48E-270 as follows:

1 Remove the screws 48E-280.

(m) Remove the screws 48E-040, 48E-050 and the fittings 48E-020, 48E-030 from the aft side wall assembly 48E-010.

SUB TASK 25-41-51-010-111-J01
D2549010504400 D2549010507400

9. Removal of the Side Wall (48E-1)

NOTE: **See TABLE 3737 for the references for the replacement procedures of permanent installed parts.**

IPL FIG. ITEM	COMPONENT PART NAME	IPL FIG. ITEM	REPLACEMENT PART NAME	SEE REPAIR TASK
48E-001 48E-270	Side Wall Post Assembly	48E-290	Nut	TBD

Table 3737
Reference list for the replacement of permanent installed parts

(a) Remove and disassemble the handle assembly 48E-140 as follows:

1 Remove the security pins 48E-160 from the handle assembly 48E-140.

2 Remove the handle assembly 48E-140 from the aft side wall assembly 48E-010.

3 Remove the special screws 48E-150 and the special washers 48E-170 from the aft side wall assembly 48E-010.

(b) Remove the studs 48E-260 and the washers 48E-250 from the cover oxygen container assy 48E-180.

(c) Remove the screws 48E-200, the nuts 48E-210 and the cover oxygen container assy 48E-180 from the angle 48E-190.

(d) Remove the screws 48E-240, the washers 48E-250 and the angle 48E-190 from the aft side wall assembly 48E-010.

(e) Remove the ground cable from the oxygen container assy 48E-230.

(f) Remove the screws 48E-240, the washers 48E-250 and the oxygen container assy 48E-230 from the angles 48E-220.

(g) Remove the screws 48E-240, the washers 48E-250 and the angles 48E-220 from the aft side wall assembly 48E-010.

(h) Remove the screws 48E-340, 48E-350, the washers 48E-250 and the angle 48E-330 from the aft side wall assembly 48E-010.

(i) Remove the caps 48E-310, the screws 48E-300, 48E-320, the washers 48E-250 and the post assembly 48E-270.

(j) Disassemble the post assembly 48E-270 as follows:

1 Remove the screws 48E-280.

(k) Remove the screws 48E-040, 48E-050 and the fittings 48E-020, 48E-030 from the aft side wall assembly 48E-010.

TASK 25-41-51-000-825-H01
D2549020300000 D2549020412800 D2549020802600 D2549030410200 R225401675-000 R225401811-000

244. Removal of the Side Wall

A. General

A complete disassembly of the component is not necessary and not recommended.

Do not disassemble the component more than it is necessary for:

- Cleaning
- Visual Inspection
- Replacement of defective parts.

B. Job Set-up Information
(1) Consumable Materials

REFERENCE	DESIGNATION
08-007	Sealant, High Temperature
08-017A	Adhesive Structuralflexible

Table 3738
Consumable Materials

(2) Fixtures, Tools, Test and Support Equipment

REFERENCE	DESIGNATION
	hot air blower

Table 3739
Fixtures, Tools, Test and Support Equipment

C. Procedure

WARNING: **BE CAREFUL WHEN YOU USE SOLVENTS/CLEANING AGENTS, SEALANTS AND OTHER MATERIALS. OBEY THE MATERIAL MANUFACTURER'S INSTRUCTIONS AND THE LOCAL REGULATIONS. MAKE SURE THAT THERE IS A GOOD FLOW OF AIR THROUGH THE WORK AREA. DO NOT BREATHE THE FUMES. DO NOT SMOKE. DO NOT USE THESE MATERIALS NEAR A FLAME, SPARKS OR SOURCES OF HEAT. USE PROTECTIVE CLOTHING, GOGGLES AND GLOVES. IF YOU GET ONE OF THESE MATERIALS ON YOUR SKIN OR IN YOUR EYES, FLUSH IT AWAY WITH A FLOW OF CLEAN WATER. IF YOU GET ONE OF THESE MATERIALS IN YOUR MOUTH, GET IMMEDIATE MEDICAL AID. IN GENERAL, THESE MATERIALS ARE POISONOUS, FLAMMABLE AND SKIN IRRITANTS.**

WARNING: **KEEP ALL HYDROCARBONS (FUELS, LUBRICANTS, ETC.) AWAY FROM ALL SOURCES OF OXYGEN. OXYGEN BECOMES EXPLOSIVE WHEN IT TOUCHES HYDROCARBONS.**

WARNING: **TO PREVENT CONTAMINATION OF THE OXYGEN SYSTEM, MAKE SURE THAT YOUR HANDS AND ALL THE TOOLS ARE CLEAN.**

CAUTION: **PUT DRY, CLEAN, METAL OR PLASTIC PLUGS ON ALL PIPES OR UNITS REMOVED TEMPORARILY. PUT EACH PIPE OR UNIT IN A SEALED VINYL BAG. UNWANTED MATERIALS IN THE OXYGEN SYSTEM CAN DAMAGE THE SYSTEM.**

CAUTION: **DO ALL THE WORK ON A CLEAN, SOFT SURFACE TO PREVENT DAMAGE TO THE COMPONENTS.**

SUB TASK 25-41-51-010-112-A01

D2549020300000 D2549020412800 D2549030410200 R225401675-000 R225401811-000

1. Removal of the Side Wall (48F-1)

NOTE: **See TABLE 3740 for the references for the replacement procedures of permanent installed parts.**

IPL FIG. ITEM	COMPONENT PART NAME	IPL FIG. ITEM	REPLACEMENT PART NAME	SEE REPAIR TASK/ SPM REFERENCE
48F-001 48F-270	Side Wall Post Assembly	48F-290	Nut	Replacement of the Riveted Parts
48F-001 48F-450	Side Wall Mirror Assembly	48F-460 48F-470	Mirror Mirror Panel	SPM 25-00-01

Table 3740
Reference list for the replacement of permanent installed parts

(a) Remove and disassemble the handle assemblies 48F-140 as follows:

1 Remove the security pins 48F-160 from the handle assemblies 48F-140.

2 Remove the handle assemblies 48F-140 from the aft side wall assembly 48F-010.

3 Remove the special screws 48F-150 and the special washers 48F-170 from the aft side wall assembly 48F-010.

(b) Remove the toilet seat cover dispenser 48F-330 from the screws 48F-340.

(c) Remove the screws 48F-340 from the aft side wall assembly 48F-010.

(d) Remove the stud 48F-480.

(e) Remove the mirror assembly 48F-450 from the screws 48F-340.

(f) Remove the screws 48F-340 from the aft side wall assembly 48F-010.

(g) Remove the screws 48F-200 and the section 48F-440 from the aft side wall assembly 48F-010.

(h) Remove the studs 48F-260 and the washers 48F-250 from the cover oxygen container assy 48F-180.

(i) Remove the screws 48F-200, the nuts 48F-210 and the cover oxygen container assy 48F-180 from the angle 48F-190.

(j) Remove the screws 48F-240, the washers 48F-250 and the angle 48F-190 from the aft side wall assembly 48F-010.

(k) Remove the ground cable from the oxygen container assy 48F-230.

(l) Remove the screws 48F-240, 48F-245, the washers 48F-250 and the oxygen container assy 48F-230 from the angles 48F-220.

(m) Remove the screws 48F-240, the washers 48F-250 and the angles 48F-220 from the aft side wall assembly 48F-010.

(n) Remove the screws 48F-300, the washers 48F-250 and the angle 48F-350 from the aft side wall assembly 48F-010.

(o) Remove the screws 48F-430 and the single door emergency unlocking device assembly 48F-360 from the post assembly 48F-270.

(p) Disassemble the single door emergency unlocking device assembly 48F-360 as follows:

WARNING: BE CAREFUL WHEN YOU USE MATERIAL NO. 08-007 SEALANT, HIGH TEMPERATURE. OBEY THE MATERIAL MANUFACTURER'S INSTRUCTIONS.

1 Remove the bolt 48F-420 and the emergency unlocking device strike 48F-380 from the emergency unlocking device housing 48F-370.

NOTE: If necessary use a hot air blower to heat up the Material No. 08-007 Sealant, High Temperature to remove the bolt 48F-420.

WARNING: BE CAREFUL WHEN YOU USE MATERIAL NO. 08-007 SEALANT, HIGH TEMPERATURE. OBEY THE MATERIAL MANUFACTURER'S INSTRUCTIONS.

2 Remove the pin 48F-400, the snap catch 48F-410 and the emergency unlocking device pivot 48F-390 from the emergency unlocking device housing 48F-370.

NOTE: If necessary use a hot air blower to heat up the Material No. 08-007 Sealant, High Temperature to remove the snap catch 48F-410 and the pin 48F-400.

(q) Remove the caps 48F-310, the screws 48F-300, 48F-320, the washers 48F-250 and the post assembly 48F-270.

(r) Disassemble the post assembly 48F-270 as follows:

1 Remove the screws 48F-280.

(s) Remove the screws 48F-040, 48F-050 and the fittings 48F-020, 48F-030 from the aft side wall assembly 48F-010.

SUB TASK 25-41-51-010-112-B01
D2549020802600

2. Removal of the Side Wall (48F-1)

NOTE: **See TABLE 3741 for the references for the replacement procedures of permanent installed parts.**
More data for bonded parts are given in column SEE REPAIR TASK. Use the data for the selection of the related repair solution.

IPL FIG. ITEM	COMPONENT PART NAME	IPL FIG. ITEM	REPLACE-MENT PART NAME	SEE REPAIR TASK
48F-001 48F-270	Side Wall Post Assembly	48F-290	Nut	TBD
48F-001 48F-010	Side Wall Aft Side Wall Assembly	48F-490	Reinforcing Strip	TBD Material No. 08-017A Adhesive Structuralflexible

Table 3741
Reference list for the replacement of permanent installed parts

(a) Remove and disassemble the handle assemblies 48F-140 as follows:

1 Remove the security pins 48F-160 from the handle assemblies 48F-140.

2 Remove the handle assemblies 48F-140 from the aft side wall assembly 48F-010.

3 Remove the special screws 48F-150 and the special washers 48F-170 from the aft side wall assembly 48F-010.

(b) Remove the toilet seat cover dispenser 48F-330 from the screws 48F-340.

(c) Remove the screws 48F-340 from the aft side wall assembly 48F-010.

(d) Remove the stud 48F-480.

(e) Remove the studs 48F-260 and the washers 48F-250 from the cover oxygen container assy 48F-180.

(f) Remove the screws 48F-200, the nuts 48F-210 and the cover oxygen container assy 48F-180 from the angle 48F-190.

(g) Remove the screws 48F-240, the washers 48F-250 and the angle 48F-190 from the aft side wall assembly 48F-010.

(h) Remove the ground cable from the oxygen container assy 48F-230.

(i) Remove the screws 48F-240, the washers 48F-250 and the oxygen container assy 48F-230 from the angles 48F-220.

(j) Remove the screws 48F-240, the washers 48F-250 and the angles 48F-220 from the aft side wall assembly 48F-010.

(k) Remove the screws 48F-300, the washers 48F-250 and the angle 48F-350 from the aft side wall assembly 48F-010.

(l) Remove the caps 48F-310, the screws 48F-300, 48F-320, the washers 48F-250 and the post assembly 48F-270.

(m) Disassemble the post assembly 48F-270 as follows:

1 Remove the screws 48F-280.

(n) Remove the screws 48F-040, 48F-050 and the fittings 48F-020, 48F-030 from the aft side wall assembly 48F-010.

TASK 25-41-51-000-825-J01
D2549010401000 D2549010403200 D2549010403400 D2549010404600 D2549010404800 D2549010610600 D2549020400800 D2549020401000 D2549020402200 D2549020403200 D2549020403400 D2549020406000 D2549020406400 D2549020407400 D2549020408200 D2549020809600 D2549030408600 D2549030409200 D2549030409400 D2549030409600 D2549030410000 D2549030414000 D2549030704800 D2549040500600 R225401136-006 R225401136-012 R225401136-024 R225401183-004 R225401183-006 R225401649-000 R225401671-000 R225401671-002 R225401673-000 R225401685-000 R225401685-002

245. Removal of the Side Wall

A. General

A complete disassembly of the component is not necessary and not recommended.

Do not disassemble the component more than it is necessary for:

- Cleaning
- Visual Inspection
- Replacement of defective parts.

B. Job Set-up Information
(1) Consumable Materials

REFERENCE	DESIGNATION
08-007	Sealant, High Temperature

Table 3742
Consumable Materials

(2) Fixtures, Tools, Test and Support Equipment

REFERENCE	DESIGNATION
	hot air blower

Table 3743
Fixtures, Tools, Test and Support Equipment

C. Procedure

WARNING: **BE CAREFUL WHEN YOU USE SOLVENTS/CLEANING AGENTS, SEALANTS AND OTHER MATERIALS. OBEY THE MATERIAL MANUFACTURER'S INSTRUCTIONS AND THE LOCAL REGULATIONS. MAKE SURE THAT THERE IS A GOOD FLOW OF AIR THROUGH THE WORK AREA. DO NOT BREATHE THE FUMES. DO NOT SMOKE. DO NOT USE THESE MATERIALS NEAR A FLAME, SPARKS OR SOURCES OF HEAT. USE PROTECTIVE CLOTHING, GOGGLES AND GLOVES. IF YOU GET ONE OF THESE MATERIALS ON YOUR SKIN OR IN YOUR EYES, FLUSH IT AWAY WITH A FLOW OF CLEAN WATER. IF YOU GET ONE OF THESE MATERIALS IN YOUR MOUTH, GET IMMEDIATE MEDICAL AID. IN GENERAL, THESE MATERIALS ARE POISONOUS, FLAMMABLE AND SKIN IRRITANTS.**

WARNING: **KEEP ALL HYDROCARBONS (FUELS, LUBRICANTS, ETC.) AWAY FROM ALL SOURCES OF OXYGEN. OXYGEN BECOMES EXPLOSIVE WHEN IT TOUCHES HYDROCARBONS.**

WARNING: **TO PREVENT CONTAMINATION OF THE OXYGEN SYSTEM, MAKE SURE THAT YOUR HANDS AND ALL THE TOOLS ARE CLEAN.**

CAUTION: **PUT DRY, CLEAN, METAL OR PLASTIC PLUGS ON ALL PIPES OR UNITS REMOVED TEMPORARILY. PUT EACH PIPE OR UNIT IN A SEALED VINYL BAG. UNWANTED MATERIALS IN THE OXYGEN SYSTEM CAN DAMAGE THE SYSTEM.**

CAUTION: **DO ALL THE WORK ON A CLEAN, SOFT SURFACE TO PREVENT DAMAGE TO THE COMPONENTS.**

SUB TASK 25-41-51-010-113-A01
D2549030409600 D2549030414000 D2549030704800 R225401671-000 R225401671-002

1. Removal of the Side Wall (48G-1)

NOTE: **See TABLE 3744 for the references for the replacement procedures of permanent installed parts.**

IPL FIG. ITEM	COMPONENT PART NAME	IPL FIG. ITEM	REPLACEMENT PART NAME	SEE REPAIR TASK
48G-001 48G-270	Side Wall Post Assembly	48G-290	Nut	TBD

Table 3744
Reference list for the replacement of permanent installed parts

(a) Remove and disassemble the handle assemblies 48G-450 as follows:

1 Remove the setscrews 48G-490 from the handle 48G-460.

2 Remove the handle 48G-460 from the aft side wall assembly 48G-010.

3 Remove the screws 48G-470 and the washers 48G-480 from the aft side wall assembly 48G-010.

(b) Remove the studs 48G-260 and the washers 48G-250 from the cover oxygen container assy 48G-180.

(c) Remove the screws 48G-200, the nuts 48G-210 and the cover oxygen container assy 48G-180 from the angle 48G-190.

(d) Remove the screws 48G-240, the washers 48G-250 and the angle 48G-190 from the aft side wall assembly 48G-010.

(e) Remove the ground cable from the oxygen container assy 48G-230.

(f) Remove the screws 48G-240, the washers 48G-250 and the oxygen container assy 48G-230 from the angles 48G-220.

(g) Remove the screws 48G-240, the washers 48G-250 and the angles 48G-220 from the aft side wall assembly 48G-010.

(h) Remove the screws 48G-300, the washers 48G-250 and the angle 48G-350 from the aft side wall assembly 48G-010.

(i) Remove the screws 48G-371 and the single door emergency unlocking device assembly 48G-380 from the post assembly 48G-270.

(j) Disassemble the single door emergency unlocking device assembly 48G-380 as follows:

WARNING: BE CAREFUL WHEN YOU USE MATERIAL NO. 08-007 SEALANT, HIGH TEMPERATURE. OBEY THE MATERIAL MANUFACTURER'S INSTRUCTIONS.

1 Remove the bolt 48G-440 and the emergency unlocking device strike 48G-400 from the emergency unlocking device housing 48G-390.

NOTE: If necessary use a hot air blower to heat up the Material No. 08-007 Sealant, High Temperature to remove the bolt 48G-440.

WARNING: **BE CAREFUL WHEN YOU USE MATERIAL NO. 08-007 SEALANT, HIGH TEMPERATURE. OBEY THE MATERIAL MANUFACTURER'S INSTRUCTIONS.**

2 Remove the pin 48G-420, the snap catch 48G-430 and the emergency unlocking device pivot 48G-410 from the emergency unlocking device housing 48G-390.

NOTE: **If necessary use a hot air blower to heat up the Material No. 08-007 Sealant, High Temperature to remove the snap catch 48G-430 and the pin 48G-420.**

(k) Remove the caps 48G-310, the screws 48G-300, 48G-320, the washers 48G-250 and the post assembly 48G-270.

(l) Disassemble the post assembly 48G-270 as follows:

1 Remove the screws 48G-280.

(m) Remove the screws 48G-040, 48G-050 and the fittings 48G-020, 48G-030 from the aft side wall assembly 48G-010.

SUB TASK 25-41-51-010-113-B01
D2549020406000 D2549030410000

2. Removal of the Side Wall (48G-1)

NOTE: **See TABLE 3745 for the references for the replacement procedures of permanent installed parts.**

IPL FIG. ITEM	COMPONENT PART NAME	IPL FIG. ITEM	REPLACEMENT PART NAME	SEE REPAIR TASK
48G-001 48G-270	Side Wall Post Assembly	48G-290	Nut	Replacement of the Riveted Parts

Table 3745
Reference list for the replacement of permanent installed parts

(a) Remove and disassemble the handle assemblies 48G-140 as follows:

1 Remove the security pins 48G-160 from the handle assemblies 48G-140.

2 Remove the handle assemblies 48G-140 from the aft side wall assembly 48G-010.

3 Remove the special screws 48G-150 and the special washers 48G-170 from the aft side wall assembly 48G-010.

(b) Remove the toilet seat cover dispenser 48G-330 from the screws 48G-340.

(c) Remove the screws 48G-340 from the aft side wall assembly 48G-010.

(d) Remove the screw 48G-370 and the coat hook 48G-360.

(e) Remove the studs 48G-260 and the washers 48G-250 from the cover oxygen container assy 48G-180.

(f) Remove the screws 48G-200, the nuts 48G-210 and the cover oxygen container assy 48G-180 from the angle 48G-190.

(g) Remove the screws 48G-240, the washers 48G-250 and the angle 48G-190 from the aft side wall assembly 48G-010.

(h) Remove the ground cable from the oxygen container assy 48G-230.

(i) Remove the screws 48G-240, the washers 48G-250 and the oxygen container assy 48G-230 from the angles 48G-220.

(j) Remove the screws 48G-240, the washers 48G-250 and the angles 48G-220 from the aft side wall assembly 48G-010.

(k) Remove the screws 48G-300, the washers 48G-250 and the angle 48G-350 from the aft side wall assembly 48G-010.

(l) Remove the screws 48G-371 and the single door emergency unlocking device assembly 48G-380 from the post assembly 48G-270.

(m) Disassemble the single door emergency unlocking device assembly 48G-380 as follows:

WARNING: **BE CAREFUL WHEN YOU USE MATERIAL NO. 08-007 SEALANT, HIGH TEMPERATURE. OBEY THE MATERIAL MANUFACTURER'S INSTRUCTIONS.**

1 Remove the bolt 48G-440 and the emergency unlocking device strike 48G-400 from the emergency unlocking device housing 48G-390.

NOTE: **If necessary use a hot air blower to heat up the Material No. 08-007 Sealant, High Temperature to remove the bolt 48G-440.**

WARNING: **BE CAREFUL WHEN YOU USE MATERIAL NO. 08-007 SEALANT, HIGH TEMPERATURE. OBEY THE MATERIAL MANUFACTURER'S INSTRUCTIONS.**

2 Remove the pin 48G-420, the snap catch 48G-430 and the emergency unlocking device pivot 48G-410 from the emergency unlocking device housing 48G-390.

NOTE: **If necessary use a hot air blower to heat up the Material No. 08-007 Sealant, High Temperature to remove the snap catch 48G-430 and the pin 48G-420.**

(n) Remove the caps 48G-310, the screws 48G-300, 48G-320, the washers 48G-250 and the post assembly 48G-270.

(o) Disassemble the post assembly 48G-270 as follows:

1 Remove the screws 48G-280.

(p) Remove the screws 48G-040, 48G-050 and the fittings 48G-020, 48G-030 from the aft side wall assembly 48G-010.

SUB TASK 25-41-51-010-113-C01
D2549020400800 D2549020408200

3. Removal of the Side Wall (48G-1)

NOTE: **See TABLE 3746 for the references for the replacement procedures of permanent installed parts.**

IPL FIG. ITEM	COMPONENT PART NAME	IPL FIG. ITEM	REPLACEMENT PART NAME	SEE REPAIR TASK
48G-001 48G-270	Side Wall Post Assembly	48G-290	Nut	Replacement of the Riveted Parts

Table 3746
Reference list for the replacement of permanent installed parts

(a) Remove and disassemble the handle assemblies 48G-140 as follows:

1 Remove the security pins 48G-160 from the handle assemblies 48G-140.

2 Remove the handle assemblies 48G-140 from the aft side wall assembly 48G-010.

3 Remove the special screws 48G-150 and the special washers 48G-170 from the aft side wall assembly 48G-010.

(b) Remove the toilet seat cover dispenser 48G-330 from the screws 48G-340.

(c) Remove the screws 48G-340 from the aft side wall assembly 48G-010.

(d) Remove the screw 48G-370 and the coat hook 48G-360.

(e) Remove the studs 48G-260 and the washers 48G-250 from the cover oxygen container assy 48G-180.

(f) Remove the screws 48G-200, the nuts 48G-210 and the cover oxygen container assy 48G-180 from the angle 48G-190.

(g) Remove the screws 48G-240, the washers 48G-250 and the angle 48G-190 from the aft side wall assembly 48G-010.

(h) Remove the ground cable from the oxygen container assy 48G-230.

(i) Remove the screws 48G-240, the washers 48G-250 and the oxygen container assy 48G-230 from the angles 48G-220.

(j) Remove the screws 48G-240, the washers 48G-250 and the angles 48G-220 from the aft side wall assembly 48G-010.

(k) Remove the screws 48G-300, the washers 48G-250 and the angle 48G-350 from the aft side wall assembly 48G-010.

(l) Remove the screws 48G-371 and the single door emergency unlocking device assembly 48G-380 from the post assembly 48G-270.

(m) Disassemble the single door emergency unlocking device assembly 48G-380 as follows:

WARNING: BE CAREFUL WHEN YOU USE MATERIAL NO. 08-007 SEALANT, HIGH TEMPERATURE. OBEY THE MATERIAL MANUFACTURER'S INSTRUCTIONS.

1 Remove the bolt 48G-440 and the emergency unlocking device strike 48G-400 from the emergency unlocking device housing 48G-390.

NOTE: If necessary use a hot air blower to heat up the Material No. 08-007 Sealant, High Temperature to remove the bolt 48G-440.

WARNING: BE CAREFUL WHEN YOU USE MATERIAL NO. 08-007 SEALANT, HIGH TEMPERATURE. OBEY THE MATERIAL MANUFACTURER'S INSTRUCTIONS.

2 Remove the pin 48G-420, the snap catch 48G-430 and the emergency unlocking device pivot 48G-410 from the emergency unlocking device housing 48G-390.

NOTE: If necessary use a hot air blower to heat up the Material No. 08-007 Sealant, High Temperature to remove the snap catch 48G-430 and the pin 48G-420.

(n) Remove the caps 48G-310, the screws 48G-300, 48G-320, the washers 48G-250 and the post assembly 48G-270.

(o) Disassemble the post assembly 48G-270 as follows:

1 Remove the screws 48G-280.

(p) Remove the screws 48G-040, 48G-050 and the fittings 48G-020, 48G-030 from the aft side wall assembly 48G-010.

SUB TASK 25-41-51-010-113-D01
D2549030408600

4. Removal of the Side Wall (48G-1)

NOTE: **See TABLE 3747 for the references for the replacement procedures of permanent installed parts.**

IPL FIG. ITEM	COMPONENT PART NAME	IPL FIG. ITEM	REPLACEMENT PART NAME	SEE REPAIR TASK
48G-001 48G-270	Side Wall Post Assembly	48G-290	Nut	TBD

Table 3747
Reference list for the replacement of permanent installed parts

(a) Remove and disassemble the handle assemblies 48G-140 as follows:

1 Remove the security pins 48G-160 from the handle assemblies 48G-140.

2 Remove the handle assemblies 48G-140 from the aft side wall assembly 48G-010.

3 Remove the special screws 48G-150 and the special washers 48G-170 from the aft side wall assembly 48G-010.

(b) Remove the studs 48G-260 and the washers 48G-250 from the cover oxygen container assy 48G-180.

(c) Remove the screws 48G-200, the nuts 48G-210 and the cover oxygen container assy 48G-180 from the angle 48G-190.

(d) Remove the screws 48G-240, the washers 48G-250 and the angle 48G-190 from the aft side wall assembly 48G-010.

(e) Remove the ground cable from the oxygen container assy 48G-230.

(f) Remove the screws 48G-240, the washers 48G-250 and the oxygen container assy 48G-230 from the angles 48G-220.

(g) Remove the screws 48G-240, the washers 48G-250 and the angles 48G-220 from the aft side wall assembly 48G-010.

(h) Remove the screws 48G-300, the washers 48G-250 and the angle 48G-350 from the aft side wall assembly 48G-010.

(i) Remove the caps 48G-310, the screws 48G-300, 48G-320, the washers 48G-250 and the post assembly 48G-270.

(j) Disassemble the post assembly 48G-270 as follows:

1 Remove the screws 48G-280.

(k) Remove the screws 48G-040, 48G-050 and the fittings 48G-020, 48G-030 from the aft side wall assembly 48G-010.

SUB TASK 25-41-51-010-113-E01
D2549010403400 D2549020402200 D2549020403200 D2549020407400 D2549040500600 R225401673-000

5. Removal of the Side Wall (48G-1)

NOTE: **See TABLE 3748 for the references for the replacement procedures of permanent installed parts.**

IPL FIG. ITEM	COMPONENT PART NAME	IPL FIG. ITEM	REPLACEMENT PART NAME	SEE REPAIR TASK
48G-001 48G-270	Side Wall Post Assembly	48G-290	Nut	Replacement of the Riveted Parts

Table 3748
Reference list for the replacement of permanent installed parts

(a) Remove and disassemble the handle assemblies 48G-140 as follows:

1 Remove the security pins 48G-160 from the handle assemblies 48G-140.

2 Remove the handle assemblies 48G-140 from the aft side wall assembly 48G-010.

3 Remove the special screws 48G-150 and the special washers 48G-170 from the aft side wall assembly 48G-010.

(b) Remove the toilet seat cover dispenser 48G-330 from the screws 48G-340.

(c) Remove the screws 48G-340 from the aft side wall assembly 48G-010.

(d) Remove the studs 48G-260 and the washers 48G-250 from the cover oxygen container assy 48G-180.

(e) Remove the screws 48G-200, the nuts 48G-210 and the cover oxygen container assy 48G-180 from the angle 48G-190.

(f) Remove the screws 48G-240, the washers 48G-250 and the angle 48G-190 from the aft side wall assembly 48G-010.

(g) Remove the ground cable from the oxygen container assy 48G-230.

(h) Remove the screws 48G-240, 48G-242, the washers 48G-250 and the oxygen container assy 48G-230 from the angles 48G-220.

(i) Remove the screws 48G-240, the washers 48G-250 and the angles 48G-220 from the aft side wall assembly 48G-010.

(j) Remove the screws 48G-300, the washers 48G-250 and the angle 48G-350 from the aft side wall assembly 48G-010.

(k) Remove the screws 48G-371 and the single door emergency unlocking device assembly 48G-380 from the post assembly 48G-270.

(l) Disassemble the single door emergency unlocking device assembly 48G-380 as follows:

WARNING: BE CAREFUL WHEN YOU USE MATERIAL NO. 08-007 SEALANT, HIGH TEMPERATURE. OBEY THE MATERIAL MANUFACTURER'S INSTRUCTIONS.

1 Remove the bolt 48G-440 and the emergency unlocking device strike 48G-400 from the emergency unlocking device housing 48G-390.

NOTE: If necessary use a hot air blower to heat up the Material No. 08-007 Sealant, High Temperature to remove the bolt 48G-440.

WARNING: BE CAREFUL WHEN YOU USE MATERIAL NO. 08-007 SEALANT, HIGH TEMPERATURE. OBEY THE MATERIAL MANUFACTURER'S INSTRUCTIONS.

2 Remove the pin 48G-420, the snap catch 48G-430 and the emergency unlocking device pivot 48G-410 from the emergency unlocking device housing 48G-390.

NOTE: If necessary use a hot air blower to heat up the Material No. 08-007 Sealant, High Temperature to remove the snap catch 48G-430 and the pin 48G-420.

(m) Remove the caps 48G-310, the screws 48G-300, 48G-320, the washers 48G-250 and the post assembly 48G-270.

(n) Disassemble the post assembly 48G-270 as follows:

1 Remove the screws 48G-280.

(o) Remove the screws 48G-040, 48G-050 and the fittings 48G-020, 48G-030 from the aft side wall assembly 48G-010.

SUB TASK 25-41-51-010-113-F01
D2549010403200 D2549010404600 D2549010404800 D2549010610600 R225401183-004 R225401183-006 R225401685-000 R225401685-002

6. Removal of the Side Wall (48G-1)

NOTE: **See TABLE 3749 for the references for the replacement procedures of permanent installed parts.**

IPL FIG. ITEM	COMPONENT PART NAME	IPL FIG. ITEM	REPLACEMENT PART NAME	SEE REPAIR TASK
48G-001 48G-270	Side Wall Post Assembly	48G-290	Nut	Replacement of the Riveted Parts

Table 3749
Reference list for the replacement of permanent installed parts

(a) Remove and disassemble the handle assemblies 48G-140 as follows:

1 Remove the security pins 48G-160 from the handle assemblies 48G-140.

2 Remove the handle assemblies 48G-140 from the aft side wall assembly 48G-010.

3 Remove the special screws 48G-150 and the special washers 48G-170 from the aft side wall assembly 48G-010.

(b) Remove the toilet seat cover dispenser 48G-330 from the screws 48G-340.

(c) Remove the screws 48G-340 from the aft side wall assembly 48G-010.

(d) Remove the studs 48G-260 and the washers 48G-250 from the cover oxygen container assy 48G-180.

(e) Remove the screws 48G-200, the nuts 48G-210 and the cover oxygen container assy 48G-180 from the angle 48G-190.

(f) Remove the screws 48G-240, the washers 48G-250 and the angle 48G-190 from the aft side wall assembly 48G-010.

(g) Remove the ground cable from the oxygen container assy 48G-230.

(h) Remove the screws 48G-240, 48G-242, the washers 48G-250 and the oxygen container assy 48G-230 from the angles 48G-220.

(i) Remove the screws 48G-240, the washers 48G-250 and the angles 48G-220 from the aft side wall assembly 48G-010.

(j) Remove the screws 48G-300, the washers 48G-250 and the angle 48G-350 from the aft side wall assembly 48G-010.

(k) Remove the screws 48G-371 and the single door emergency unlocking device assembly 48G-380 from the post assembly 48G-270.

(l) Disassemble the single door emergency unlocking device assembly 48G-380 as follows:

WARNING: BE CAREFUL WHEN YOU USE MATERIAL NO. 08-007 SEALANT, HIGH TEMPERATURE. OBEY THE MATERIAL MANUFACTURER'S INSTRUCTIONS.

1 Remove the bolt 48G-440 and the emergency unlocking device strike 48G-400 from the emergency unlocking device housing 48G-390.

NOTE: If necessary use a hot air blower to heat up the Material No. 08-007 Sealant, High Temperature to remove the bolt 48G-440.

WARNING: BE CAREFUL WHEN YOU USE MATERIAL NO. 08-007 SEALANT, HIGH TEMPERATURE. OBEY THE MATERIAL MANUFACTURER'S INSTRUCTIONS.

2 Remove the pin 48G-420, the snap catch 48G-430 and the emergency unlocking device pivot 48G-410 from the emergency unlocking device housing 48G-390.

NOTE: If necessary use a hot air blower to heat up the Material No. 08-007 Sealant, High Temperature to remove the snap catch 48G-430 and the pin 48G-420.

(m) Remove the caps 48G-310, the screws 48G-300, 48G-320, the washers 48G-250 and the post assembly 48G-270.

(n) Disassemble the post assembly 48G-270 as follows:

1 Remove the screws 48G-280.

(o) Remove the screws 48G-040, 48G-050 and the fittings 48G-020, 48G-030 from the aft side wall assembly 48G-010.

SUB TASK 25-41-51-010-113-G01
D2549020403400 D2549030409200 R225401136-006 R225401136-012 R225401136-024

7. Removal of the Side Wall (48G-1)

NOTE: **See TABLE 3750 for the references for the replacement procedures of permanent installed parts.**

IPL FIG. ITEM	COMPONENT PART NAME	IPL FIG. ITEM	REPLACEMENT PART NAME	SEE REPAIR TASK
48G-001 48G-270	Side Wall Post Assembly	48G-290	Nut	Replacement of the Riveted Parts

Table 3750
Reference list for the replacement of permanent installed parts

(a) Remove and disassemble the handle assemblies 48G-140 as follows:

1 Remove the security pins 48G-160 from the handle assemblies 48G-140.

2 Remove the handle assemblies 48G-140 from the aft side wall assembly 48G-010.

3 Remove the special screws 48G-150 and the special washers 48G-170 from the aft side wall assembly 48G-010.

(b) Remove the studs 48G-260 and the washers 48G-250 from the cover oxygen container assy 48G-180.

(c) Remove the screws 48G-200, the nuts 48G-210 and the cover oxygen container assy 48G-180 from the angle 48G-190.

(d) Remove the screws 48G-240, the washers 48G-250 and the angle 48G-190 from the aft side wall assembly 48G-010.

(e) Remove the ground cable from the oxygen container assy 48G-230.

(f) Remove the screws 48G-240, 48G-242, the washers 48G-250 and the oxygen container assy 48G-230 from the angles 48G-220.

(g) Remove the screws 48G-240, the washers 48G-250 and the angles 48G-220 from the aft side wall assembly 48G-010.

(h) Remove the screws 48G-300, the washers 48G-250 and the angle 48G-350 from the aft side wall assembly 48G-010.

(i) Remove the screws 48G-371 and the single door emergency unlocking device assembly 48G-380 from the post assembly 48G-270.

(j) Disassemble the single door emergency unlocking device assembly 48G-380 as follows:

WARNING: BE CAREFUL WHEN YOU USE MATERIAL NO. 08-007 SEALANT, HIGH TEMPERATURE. OBEY THE MATERIAL MANUFACTURER'S INSTRUCTIONS.

1 Remove the bolt 48G-440 and the emergency unlocking device strike 48G-400 from the emergency unlocking device housing 48G-390.

NOTE: If necessary use a hot air blower to heat up the Material No. 08-007 Sealant, High Temperature to remove the bolt 48G-440.

WARNING: BE CAREFUL WHEN YOU USE MATERIAL NO. 08-007 SEALANT, HIGH TEMPERATURE. OBEY THE MATERIAL MANUFACTURER'S INSTRUCTIONS.

2 Remove the pin 48G-420, the snap catch 48G-430 and the emergency unlocking device pivot 48G-410 from the emergency unlocking device housing 48G-390.

NOTE: If necessary use a hot air blower to heat up the Material No. 08-007 Sealant, High Temperature to remove the snap catch 48G-430 and the pin 48G-420.

(k) Remove the caps 48G-310, the screws 48G-300, 48G-320, the washers 48G-250 and the post assembly 48G-270.

(l) Disassemble the post assembly 48G-270 as follows:

1 Remove the screws 48G-280.

(m) Remove the screws 48G-040, 48G-050 and the fittings 48G-020, 48G-030 from the aft side wall assembly 48G-010.

SUB TASK 25-41-51-010-113-H01
D2549010401000 D2549020401000 D2549020406400 R225401649-000

8. Removal of the Side Wall (48G-1)

NOTE: **See TABLE 3751 for the references for the replacement procedures of permanent installed parts.**

IPL FIG. ITEM	COMPONENT PART NAME	IPL FIG. ITEM	REPLACEMENT PART NAME	SEE REPAIR TASK
48G-001 48G-270	Side Wall Post Assembly	48G-290	Nut	Replacement of the Riveted Parts

Table 3751
Reference list for the replacement of permanent installed parts

(a) Remove and disassemble the handle assemblies 48G-140 as follows:

1 Remove the security pins 48G-160 from the handle assemblies 48G-140.

2 Remove the handle assemblies 48G-140 from the aft side wall assembly 48G-010.

3 Remove the special screws 48G-150 and the special washers 48G-170 from the aft side wall assembly 48G-010.

(b) Remove the studs 48G-260 and the washers 48G-250 from the cover oxygen container assy 48G-180.

(c) Remove the screws 48G-200, the nuts 48G-210 and the cover oxygen container assy 48G-180 from the angle 48G-190.

(d) Remove the screws 48G-240, the washers 48G-250 and the angle 48G-190 from the aft side wall assembly 48G-010.

(e) Remove the ground cable from the oxygen container assy 48G-230.

(f) Remove the screws 48G-240, 48G-242, the washers 48G-250 and the oxygen container assy 48G-230 from the angles 48G-220.

(g) Remove the screws 48G-240, the washers 48G-250 and the angles 48G-220 from the aft side wall assembly 48G-010.

(h) Remove the screws 48G-300, the washers 48G-250 and the angle 48G-350 from the aft side wall assembly 48G-010.

(i) Remove the screws 48G-371 and the single door emergency unlocking device assembly 48G-380 from the post assembly 48G-270.

(j) Disassemble the single door emergency unlocking device assembly 48G-380 as follows:

WARNING: BE CAREFUL WHEN YOU USE MATERIAL NO. 08-007 SEALANT, HIGH TEMPERATURE. OBEY THE MATERIAL MANUFACTURER'S INSTRUCTIONS.

1 Remove the bolt 48G-440 and the emergency unlocking device strike 48G-400 from the emergency unlocking device housing 48G-390.

NOTE: If necessary use a hot air blower to heat up the Material No. 08-007 Sealant, High Temperature to remove the bolt 48G-440.

WARNING: BE CAREFUL WHEN YOU USE MATERIAL NO. 08-007 SEALANT, HIGH TEMPERATURE. OBEY THE MATERIAL MANUFACTURER'S INSTRUCTIONS.

2 Remove the pin 48G-420, the snap catch 48G-430 and the emergency unlocking device pivot 48G-410 from the emergency unlocking device housing 48G-390.

NOTE: If necessary use a hot air blower to heat up the Material No. 08-007 Sealant, High Temperature to remove the snap catch 48G-430 and the pin 48G-420.

(k) Remove the caps 48G-310, the screws 48G-300, 48G-320, the washers 48G-250 and the post assembly 48G-270.

(l) Disassemble the post assembly 48G-270 as follows:

1 Remove the screws 48G-280.

(m) Remove the screws 48G-040, 48G-050 and the fittings 48G-020, 48G-030 from the aft side wall assembly 48G-010.

SUB TASK 25-41-51-010-113-J01
D2549020809600 D2549030409400

9. Removal of the Side Wall (48G-1)

NOTE: **See TABLE 3752 for the references for the replacement procedures of permanent installed parts.**

IPL FIG. ITEM	COMPONENT PART NAME	IPL FIG. ITEM	REPLACEMENT PART NAME	SEE REPAIR TASK
48G-001 48G-270	Side Wall Post Assembly	48G-290	Nut	Replacement of the Riveted Parts

Table 3752
Reference list for the replacement of permanent installed parts

(a) Remove and disassemble the handle assemblies 48G-140 as follows:

1 Remove the security pins 48G-160 from the handle assemblies 48G-140.

2 Remove the handle assemblies 48G-140 from the aft side wall assembly 48G-010.

3 Remove the special screws 48G-150 and the special washers 48G-170 from the aft side wall assembly 48G-010.

(b) Remove the studs 48G-260 and the washers 48G-250 from the cover oxygen container assy 48G-180.

(c) Remove the screws 48G-200, the nuts 48G-210 and the cover oxygen container assy 48G-180 from the angle 48G-190.

(d) Remove the screws 48G-240, the washers 48G-250 and the angle 48G-190 from the aft side wall assembly 48G-010.

(e) Remove the ground cable from the oxygen container assy 48G-230.

(f) Remove the screws 48G-240, the washers 48G-250 and the oxygen container assy 48G-230 from the angles 48G-220.

(g) Remove the screws 48G-240, the washers 48G-250 and the angles 48G-220 from the aft side wall assembly 48G-010.

(h) Remove the screws 48G-300, the washers 48G-250 and the angle 48G-350 from the aft side wall assembly 48G-010.

(i) Remove the screws 48G-371 and the single door emergency unlocking device assembly 48G-380 from the post assembly 48G-270.

(j) Disassemble the single door emergency unlocking device assembly 48G-380 as follows:

WARNING: BE CAREFUL WHEN YOU USE MATERIAL NO. 08-007 SEALANT, HIGH TEMPERATURE. OBEY THE MATERIAL MANUFACTURER'S INSTRUCTIONS.

1 Remove the bolt 48G-440 and the emergency unlocking device strike 48G-400 from the emergency unlocking device housing 48G-390.

NOTE: If necessary use a hot air blower to heat up the Material No. 08-007 Sealant, High Temperature to remove the bolt 48G-440.

WARNING: BE CAREFUL WHEN YOU USE MATERIAL NO. 08-007 SEALANT, HIGH TEMPERATURE. OBEY THE MATERIAL MANUFACTURER'S INSTRUCTIONS.

2 Remove the pin 48G-420, the snap catch 48G-430 and the emergency unlocking device pivot 48G-410 from the emergency unlocking device housing 48G-390.

NOTE: If necessary use a hot air blower to heat up the Material No. 08-007 Sealant, High Temperature to remove the snap catch 48G-430 and the pin 48G-420.

(k) Remove the caps 48G-310, the screws 48G-300, 48G-320, the washers 48G-250 and the post assembly 48G-270.

(l) Disassemble the post assembly 48G-270 as follows:

1 Remove the screws 48G-280.

(m) Remove the screws 48G-040, 48G-050 and the fittings 48G-020, 48G-030 from the aft side wall assembly 48G-010.

TASK 25-41-51-000-825-K01
D2549010404000 D2549010404200 D2549010406000 D2549020302000 D2549020401400 D2549020401600 D2549020402000 D2549020402400 D2549020406600 D2549020406800 D2549020407200 D2549020408600 D2549020408800 D2549020411000 D2549020411400 D2549020412600 D2549030410600 D2549030411200 D2549030412000 D2549030412200 D2549030412600 D2549030413200 D2549030700400 D2549030701000 D2549030703400 D2549030704200 R225401611-000 R225401611-014 R225401611-016 R225401611-018 R225401624-000 R225401627-000 R225401627-002 R225401646-002 R225401688-000

246. Removal of the Side Wall

A. General

A complete disassembly of the component is not necessary and not recommended.

Do not disassemble the component more than it is necessary for:

- Cleaning
- Visual Inspection
- Replacement of defective parts.

B. Job Set-up Information
(1) Consumable Materials

REFERENCE	DESIGNATION
08-007	Sealant, High Temperature

Table 3753
Consumable Materials

(2) Fixtures, Tools, Test and Support Equipment

REFERENCE	DESIGNATION
	hot air blower

Table 3754
Fixtures, Tools, Test and Support Equipment

C. Procedure

WARNING: **BE CAREFUL WHEN YOU USE SOLVENTS/CLEANING AGENTS, SEALANTS AND OTHER MATERIALS. OBEY THE MATERIAL MANUFACTURER'S INSTRUCTIONS AND THE LOCAL REGULATIONS. MAKE SURE THAT THERE IS A GOOD FLOW OF AIR THROUGH THE WORK AREA. DO NOT BREATHE THE FUMES. DO NOT SMOKE. DO NOT USE THESE MATERIALS NEAR A FLAME, SPARKS OR SOURCES OF HEAT. USE PROTECTIVE CLOTHING, GOGGLES AND GLOVES. IF YOU GET ONE OF THESE MATERIALS ON YOUR SKIN OR IN YOUR EYES, FLUSH IT AWAY WITH A FLOW OF CLEAN WATER. IF YOU GET ONE OF THESE MATERIALS IN YOUR MOUTH, GET IMMEDIATE MEDICAL AID. IN GENERAL, THESE MATERIALS ARE POISONOUS, FLAMMABLE AND SKIN IRRITANTS.**

WARNING: **KEEP ALL HYDROCARBONS (FUELS, LUBRICANTS, ETC.) AWAY FROM ALL SOURCES OF OXYGEN. OXYGEN BECOMES EXPLOSIVE WHEN IT TOUCHES HYDROCARBONS.**

WARNING: **TO PREVENT CONTAMINATION OF THE OXYGEN SYSTEM, MAKE SURE THAT YOUR HANDS AND ALL THE TOOLS ARE CLEAN.**

CAUTION: **PUT DRY, CLEAN, METAL OR PLASTIC PLUGS ON ALL PIPES OR UNITS REMOVED TEMPORARILY. PUT EACH PIPE OR UNIT IN A SEALED VINYL BAG. UNWANTED MATERIALS IN THE OXYGEN SYSTEM CAN DAMAGE THE SYSTEM.**

CAUTION: **DO ALL THE WORK ON A CLEAN, SOFT SURFACE TO PREVENT DAMAGE TO THE COMPONENTS.**

SUB TASK 25-41-51-010-114-A01
D2549030410600

1. Removal of the Side Wall (48H-1)

NOTE: **See TABLE 3755 for the references for the replacement procedures of permanent installed parts.**

IPL FIG. ITEM	COMPONENT PART NAME	IPL FIG. ITEM	REPLACEMENT PART NAME	SEE REPAIR TASK
48H-001 48H-270	Side Wall Post Assembly	48H-290	Nut	Replacement of the Riveted Parts

Table 3755
Reference list for the replacement of permanent installed parts

(a) Remove and disassemble the handle assemblies 48H-140 as follows:

1 Remove the security pins 48H-160 from the handle assemblies 48H-140.

2 Remove the handle assemblies 48H-140 from the aft side wall assembly 48H-010.

3 Remove the special screws 48H-150 and the special washers 48H-170 from the aft side wall assembly 48H-010.

(b) Remove the toilet seat cover dispenser 48H-330 from the screws 48H-340.

(c) Remove the screws 48H-340 from the aft side wall assembly 48H-010.

(d) Remove the screw 48H-450 and the coat hook 48H-440.

(e) Remove the studs 48H-260 and the washers 48H-250 from the cover oxygen container assy 48H-180.

(f) Remove the screws 48H-200, the nuts 48H-210 and the cover oxygen container assy 48H-180 from the angle 48H-190.

(g) Remove the screws 48H-240, the washers 48H-250 and the angle 48H-190 from the aft side wall assembly 48H-010.

(h) Remove the ground cable from the oxygen container assy 48H-230.

(i) Remove the screws 48H-240, the washers 48H-250 and the oxygen container assy 48H-230 from the angles 48H-220.

(j) Remove the screws 48H-240, the washers 48H-250 and the angles 48H-220 from the aft side wall assembly 48H-010.

(k) Remove the screws 48H-300, the washers 48H-250 and the angle 48H-350 from the aft side wall assembly 48H-010.

(l) Remove the screws 48H-360 and the single door emergency unlocking device assembly 48H-370 from the post assembly 48H-270.

(m) Disassemble the single door emergency unlocking device assembly 48H-370 as follows:

WARNING: **BE CAREFUL WHEN YOU USE MATERIAL NO. 08-007 SEALANT, HIGH TEMPERATURE. OBEY THE MATERIAL MANUFACTURER'S INSTRUCTIONS.**

1 Remove the bolt 48H-430 and the emergency unlocking device strike 48H-390 from the emergency unlocking device housing 48H-380.

NOTE: **If necessary use a hot air blower to heat up the Material No. 08-007 Sealant, High Temperature to remove the bolt 48H-430.**

WARNING: **BE CAREFUL WHEN YOU USE MATERIAL NO. 08-007 SEALANT, HIGH TEMPERATURE. OBEY THE MATERIAL MANUFACTURER'S INSTRUCTIONS.**

2 Remove the pin 48H-410, the snap catch 48H-420 and the emergency unlocking device pivot 48H-400 from the emergency unlocking device housing 48H-380.

NOTE: **If necessary use a hot air blower to heat up the Material No. 08-007 Sealant, High Temperature to remove the snap catch 48H-420 and the pin 48H-410.**

(n) Remove the caps 48H-310, the screws 48H-300, 48H-320, the washers 48H-250 and the post assembly 48H-270.

(o) Disassemble the post assembly 48H-270 as follows:

1 Remove the screws 48H-280.

(p) Remove the screws 48H-040, 48H-050 and the fittings 48H-020, 48H-030 from the aft side wall assembly 48H-010.

SUB TASK 25-41-51-010-114-B01
D2549030412200 D2549030704200

2. Removal of the Side Wall (48H-1)

NOTE: **See TABLE 3756 for the references for the replacement procedures of permanent installed parts.**

IPL FIG. ITEM	COMPONENT PART NAME	IPL FIG. ITEM	REPLACEMENT PART NAME	SEE REPAIR TASK
48H-001 48H-270	Side Wall Post Assembly	48H-290	Nut	Replacement of the Riveted Parts

Table 3756
Reference list for the replacement of permanent installed parts

(a) Remove and disassemble the handle assemblies 48H-140 as follows:

1 Remove the security pins 48H-160 from the handle assemblies 48H-140.

2 Remove the handle assemblies 48H-140 from the aft side wall assembly 48H-010.

3 Remove the special screws 48H-150 and the special washers 48H-170 from the aft side wall assembly 48H-010.

(b) Remove the toilet seat cover dispenser 48H-330 from the screws 48H-340.

(c) Remove the screws 48H-340 from the aft side wall assembly 48H-010.

(d) Remove the screw 48H-450 and the coat hook 48H-440.

(e) Remove the studs 48H-260 and the washers 48H-250 from the cover oxygen container assy 48H-180.

(f) Remove the screws 48H-200, the nuts 48H-210 and the cover oxygen container assy 48H-180 from the angle 48H-190.

(g) Remove the screws 48H-240, the washers 48H-250 and the angle 48H-190 from the aft side wall assembly 48H-010.

(h) Remove the ground cable from the oxygen container assy 48H-230.

(i) Remove the screws 48H-240, the washers 48H-250 and the oxygen container assy 48H-230 from the angles 48H-220.

(j) Remove the screws 48H-240, the washers 48H-250 and the angles 48H-220 from the aft side wall assembly 48H-010.

(k) Remove the screws 48H-300, the washers 48H-250 and the angle 48H-350 from the aft side wall assembly 48H-010.

(l) Remove the screws 48H-360 and the single door emergency unlocking device assembly 48H-370 from the post assembly 48H-270.

(m) Disassemble the single door emergency unlocking device assembly 48H-370 as follows:

WARNING: BE CAREFUL WHEN YOU USE MATERIAL NO. 08-007 SEALANT, HIGH TEMPERATURE. OBEY THE MATERIAL MANUFACTURER'S INSTRUCTIONS.

1 Remove the bolt 48H-430 and the emergency unlocking device strike 48H-390 from the emergency unlocking device housing 48H-380.

NOTE: If necessary use a hot air blower to heat up the Material No. 08-007 Sealant, High Temperature to remove the bolt 48H-430.

WARNING: BE CAREFUL WHEN YOU USE MATERIAL NO. 08-007 SEALANT, HIGH TEMPERATURE. OBEY THE MATERIAL MANUFACTURER'S INSTRUCTIONS.

2 Remove the pin 48H-410, the snap catch 48H-420 and the emergency unlocking device pivot 48H-400 from the emergency unlocking device housing 48H-380.

NOTE: If necessary use a hot air blower to heat up the Material No. 08-007 Sealant, High Temperature to remove the snap catch 48H-420 and the pin 48H-410.

(n) Remove the caps 48H-310, the screws 48H-300, 48H-320, the washers 48H-250 and the post assembly 48H-270.

(o) Disassemble the post assembly 48H-270 as follows:

1 Remove the screws 48H-280.

(p) Remove the screws 48H-040, 48H-050 and the fittings 48H-020, 48H-030 from the aft side wall assembly 48H-010.

SUB TASK 25-41-51-010-114-C01
D2549020402400

3. Removal of the Side Wall (48H-1)

NOTE: **See TABLE 3757 for the references for the replacement procedures of permanent installed parts.**

IPL FIG. ITEM	COMPONENT PART NAME	IPL FIG. ITEM	REPLACEMENT PART NAME	SEE REPAIR TASK
48H-001 48H-270	Side Wall Post Assembly	48H-290	Nut	Replacement of the Riveted Parts

Table 3757
Reference list for the replacement of permanent installed parts

(a) Remove and disassemble the handle assemblies 48H-140 as follows:

1 Remove the security pins 48H-160 from the handle assemblies 48H-140.

2 Remove the handle assemblies 48H-140 from the aft side wall assembly 48H-010.

3 Remove the special screws 48H-150 and the special washers 48H-170 from the aft side wall assembly 48H-010.

(b) Remove the screw 48H-450 and the coat hook 48H-440.

(c) Remove the studs 48H-260 and the washers 48H-250 from the cover oxygen container assy 48H-180.

(d) Remove the screws 48H-200, the nuts 48H-210 and the cover oxygen container assy 48H-180 from the angle 48H-190.

(e) Remove the screws 48H-240, the washers 48H-250 and the angle 48H-190 from the aft side wall assembly 48H-010.

(f) Remove the ground cable from the oxygen container assy 48H-230.

(g) Remove the screws 48H-240, the washers 48H-250 and the oxygen container assy 48H-230 from the angles 48H-220.

(h) Remove the screws 48H-240, the washers 48H-250 and the angles 48H-220 from the aft side wall assembly 48H-010.

(i) Remove the screws 48H-300, the washers 48H-250 and the angle 48H-350 from the aft side wall assembly 48H-010.

(j) Remove the screws 48H-360 and the single door emergency unlocking device assembly 48H-370 from the post assembly 48H-270.

(k) Disassemble the single door emergency unlocking device assembly 48H-370 as follows:

WARNING: BE CAREFUL WHEN YOU USE MATERIAL NO. 08-007 SEALANT, HIGH TEMPERATURE. OBEY THE MATERIAL MANUFACTURER'S INSTRUCTIONS.

1 Remove the bolt 48H-430 and the emergency unlocking device strike 48H-390 from the emergency unlocking device housing 48H-380.

NOTE: If necessary use a hot air blower to heat up the Material No. 08-007 Sealant, High Temperature to remove the bolt 48H-430.

WARNING: BE CAREFUL WHEN YOU USE MATERIAL NO. 08-007 SEALANT, HIGH TEMPERATURE. OBEY THE MATERIAL MANUFACTURER'S INSTRUCTIONS.

2 Remove the pin 48H-410, the snap catch 48H-420 and the emergency unlocking device pivot 48H-400 from the emergency unlocking device housing 48H-380.

NOTE: If necessary use a hot air blower to heat up the Material No. 08-007 Sealant, High Temperature to remove the snap catch 48H-420 and the pin 48H-410.

(l) Remove the caps 48H-310, the screws 48H-300, 48H-320, the washers 48H-250 and the post assembly 48H-270.

(m) Disassemble the post assembly 48H-270 as follows:

1 Remove the screws 48H-280.

(n) Remove the screws 48H-040, 48H-050 and the fittings 48H-020, 48H-030 from the aft side wall assembly 48H-010.

SUB TASK 25-41-51-010-114-D01

D2549020302000 D2549020401400 D2549020402000 D2549020406600 D2549020408800 D2549020411000 D2549030411200 D2549030701000 D2549030703400 R225401627-000 R225401627-002

4. Removal of the Side Wall (48H-1)

NOTE: **See TABLE 3758 for the references for the replacement procedures of permanent installed parts.**

IPL FIG. ITEM	COMPONENT PART NAME	IPL FIG. ITEM	REPLACEMENT PART NAME	SEE REPAIR TASK
48H-001 48H-270	Side Wall Post Assembly	48H-290	Nut	Replacement of the Riveted Parts

Table 3758
Reference list for the replacement of permanent installed parts

(a) Remove and disassemble the handle assemblies 48H-140 as follows:

1 Remove the security pins 48H-160 from the handle assemblies 48H-140.

2 Remove the handle assemblies 48H-140 from the aft side wall assembly 48H-010.

3 Remove the special screws 48H-150 and the special washers 48H-170 from the aft side wall assembly 48H-010.

(b) Remove the toilet seat cover dispenser 48H-330 from the screws 48H-340.

(c) Remove the screws 48H-340 from the aft side wall assembly 48H-010.

(d) Remove the studs 48H-260 and the washers 48H-250 from the cover oxygen container assy 48H-180.

(e) Remove the screws 48H-200, the nuts 48H-210 and the cover oxygen container assy 48H-180 from the angle 48H-190.

(f) Remove the screws 48H-240, the washers 48H-250 and the angle 48H-190 from the aft side wall assembly 48H-010.

(g) Remove the ground cable from the oxygen container assy 48H-230.

(h) Remove the screws 48H-240, 48H-242, the washers 48H-250 and the oxygen container assy 48H-230 from the angles 48H-220.

(i) Remove the screws 48H-240, the washers 48H-250 and the angles 48H-220 from the aft side wall assembly 48H-010.

(j) Remove the screws 48H-300, the washers 48H-250 and the angle 48H-350 from the aft side wall assembly 48H-010.

(k) Remove the screws 48H-360 and the single door emergency unlocking device assembly 48H-370 from the post assembly 48H-270.

(l) Disassemble the single door emergency unlocking device assembly 48H-370 as follows:

WARNING: BE CAREFUL WHEN YOU USE MATERIAL NO. 08-007 SEALANT, HIGH TEMPERATURE. OBEY THE MATERIAL MANUFACTURER'S INSTRUCTIONS.

1 Remove the bolt 48H-430 and the emergency unlocking device strike 48H-390 from the emergency unlocking device housing 48H-380.

NOTE: If necessary use a hot air blower to heat up the Material No. 08-007 Sealant, High Temperature to remove the bolt 48H-430.

WARNING: BE CAREFUL WHEN YOU USE MATERIAL NO. 08-007 SEALANT, HIGH TEMPERATURE. OBEY THE MATERIAL MANUFACTURER'S INSTRUCTIONS.

2 Remove the pin 48H-410, the snap catch 48H-420 and the emergency unlocking device pivot 48H-400 from the emergency unlocking device housing 48H-380.

NOTE: If necessary use a hot air blower to heat up the Material No. 08-007 Sealant, High Temperature to remove the snap catch 48H-420 and the pin 48H-410.

(m) Remove the caps 48H-310, the screws 48H-300, 48H-320, the washers 48H-250 and the post assembly 48H-270.

(n) Disassemble the post assembly 48H-270 as follows:

1 Remove the screws 48H-280.

(o) Remove the screws 48H-040, 48H-050 and the fittings 48H-020, 48H-030 from the aft side wall assembly 48H-010.

SUB TASK 25-41-51-010-114-E01
D2549010404000 D2549020406800 D2549020407200 D2549030412000 R225401646-002

5. Removal of the Side Wall (48H-1)

NOTE: **See TABLE 3759 for the references for the replacement procedures of permanent installed parts.**

IPL FIG. ITEM	COMPONENT PART NAME	IPL FIG. ITEM	REPLACEMENT PART NAME	SEE REPAIR TASK
48H-001 48H-270	Side Wall Post Assembly	48H-290	Nut	Replacement of the Riveted Parts

Table 3759
Reference list for the replacement of permanent installed parts

(a) Remove and disassemble the handle assemblies 48H-140 as follows:

1 Remove the security pins 48H-160 from the handle assemblies 48H-140.

2 Remove the handle assemblies 48H-140 from the aft side wall assembly 48H-010.

3 Remove the special screws 48H-150 and the special washers 48H-170 from the aft side wall assembly 48H-010.

(b) Remove the toilet seat cover dispenser 48H-330 from the screws 48H-340.

(c) Remove the screws 48H-340 from the aft side wall assembly 48H-010.

(d) Remove the studs 48H-260 and the washers 48H-250 from the cover oxygen container assy 48H-180.

(e) Remove the screws 48H-200, the nuts 48H-210 and the cover oxygen container assy 48H-180 from the angle 48H-190.

(f) Remove the screws 48H-240, the washers 48H-250 and the angle 48H-190 from the aft side wall assembly 48H-010.

(g) Remove the ground cable from the oxygen container assy 48H-230.

(h) Remove the screws 48H-240, 48H-242, the washers 48H-250 and the oxygen container assy 48H-230 from the angles 48H-220.

(i) Remove the screws 48H-240, the washers 48H-250 and the angles 48H-220 from the aft side wall assembly 48H-010.

(j) Remove the screws 48H-300, the washers 48H-250 and the angle 48H-350 from the aft side wall assembly 48H-010.

(k) Remove the screws 48H-360 and the single door emergency unlocking device assembly 48H-370 from the post assembly 48H-270.

(l) Disassemble the single door emergency unlocking device assembly 48H-370 as follows:

WARNING: BE CAREFUL WHEN YOU USE MATERIAL NO. 08-007 SEALANT, HIGH TEMPERATURE. OBEY THE MATERIAL MANUFACTURER'S INSTRUCTIONS.

1 Remove the bolt 48H-430 and the emergency unlocking device strike 48H-390 from the emergency unlocking device housing 48H-380.

NOTE: If necessary use a hot air blower to heat up the Material No. 08-007 Sealant, High Temperature to remove the bolt 48H-430.

WARNING: BE CAREFUL WHEN YOU USE MATERIAL NO. 08-007 SEALANT, HIGH TEMPERATURE. OBEY THE MATERIAL MANUFACTURER'S INSTRUCTIONS.

2 Remove the pin 48H-410, the snap catch 48H-420 and the emergency unlocking device pivot 48H-400 from the emergency unlocking device housing 48H-380.

NOTE: If necessary use a hot air blower to heat up the Material No. 08-007 Sealant, High Temperature to remove the snap catch 48H-420 and the pin 48H-410.

(m) Remove the caps 48H-310, the screws 48H-300, 48H-320, the washers 48H-250 and the post assembly 48H-270.

(n) Disassemble the post assembly 48H-270 as follows:

1 Remove the screws 48H-280.

(o) Remove the screws 48H-040, 48H-050 and the fittings 48H-020, 48H-030 from the aft side wall assembly 48H-010.

SUB TASK 25-41-51-010-114-F01
D2549010404200 D2549010406000 D2549020408600 D2549020411400

D2549020412600 D2549030412600 D2549030413200 D2549030700400 R225401611-000 R225401611-014 R225401611-016 R225401611-018 R225401688-000

6. Removal of the Side Wall (48H-1)

NOTE: **See TABLE 3760 for the references for the replacement procedures of permanent installed parts.**

IPL FIG. ITEM	COMPONENT PART NAME	IPL FIG. ITEM	REPLACEMENT PART NAME	SEE REPAIR TASK
48H-001 48H-270	Side Wall Post Assembly	48H-290	Nut	Replacement of the Riveted Parts

Table 3760
Reference list for the replacement of permanent installed parts

(a) Remove and disassemble the handle assemblies 48H-140 as follows:

1 Remove the security pins 48H-160 from the handle assemblies 48H-140.

2 Remove the handle assemblies 48H-140 from the aft side wall assembly 48H-010.

3 Remove the special screws 48H-150 and the special washers 48H-170 from the aft side wall assembly 48H-010.

(b) Remove the studs 48H-260 and the washers 48H-250 from the cover oxygen container assy 48H-180.

(c) Remove the screws 48H-200, the nuts 48H-210 and the cover oxygen container assy 48H-180 from the angle 48H-190.

(d) Remove the screws 48H-240, the washers 48H-250 and the angle 48H-190 from the aft side wall assembly 48H-010.

(e) Remove the ground cable from the oxygen container assy 48H-230.

(f) Remove the screws 48H-240, the washers 48H-250 and the oxygen container assy 48H-230 from the angles 48H-220.

(g) Remove the screws 48H-240, the washers 48H-250 and the angles 48H-220 from the aft side wall assembly 48H-010.

(h) Remove the screws 48H-300, the washers 48H-250 and the angle 48H-350 from the aft side wall assembly 48H-010.

(i) Remove the screws 48H-360 and the single door emergency unlocking device assembly 48H-370 from the post assembly 48H-270.

(j) Disassemble the single door emergency unlocking device assembly 48H-370 as follows:

WARNING: BE CAREFUL WHEN YOU USE MATERIAL NO. 08-007 SEALANT, HIGH TEMPERATURE. OBEY THE MATERIAL MANUFACTURER'S INSTRUCTIONS.

1 Remove the bolt 48H-430 and the emergency unlocking device strike 48H-390 from the emergency unlocking device housing 48H-380.

NOTE: If necessary use a hot air blower to heat up the Material No. 08-007 Sealant, High Temperature to remove the bolt 48H-430.

WARNING: BE CAREFUL WHEN YOU USE MATERIAL NO. 08-007 SEALANT, HIGH TEMPERATURE. OBEY THE MATERIAL MANUFACTURER'S INSTRUCTIONS.

2 Remove the pin 48H-410, the snap catch 48H-420 and the emergency unlocking device pivot 48H-400 from the emergency unlocking device housing 48H-380.

NOTE: If necessary use a hot air blower to heat up the Material No. 08-007 Sealant, High Temperature to remove the snap catch 48H-420 and the pin 48H-410.

(k) Remove the caps 48H-310, the screws 48H-300, 48H-320, the washers 48H-250 and the post assembly 48H-270.

(l) Disassemble the post assembly 48H-270 as follows:

1 Remove the screws 48H-280.

(m) Remove the screws 48H-040, 48H-050 and the fittings 48H-020, 48H-030 from the aft side wall assembly 48H-010.

SUB TASK 25-41-51-010-114-G01
D2549020401600 R225401624-000

7. Removal of the Side Wall (48H-1)

NOTE: **See TABLE 3761 for the references for the replacement procedures of permanent installed parts.**

IPL FIG. ITEM	COMPONENT PART NAME	IPL FIG. ITEM	REPLACEMENT PART NAME	SEE REPAIR TASK
48H-001 48H-270	Side Wall Post Assembly	48H-290	Nut	Replacement of the Riveted Parts

Table 3761
Reference list for the replacement of permanent installed parts

(a) Remove and disassemble the handle assemblies 48H-140 as follows:

1 Remove the security pins 48H-160 from the handle assemblies 48H-140.

2 Remove the handle assemblies 48H-140 from the aft side wall assembly 48H-010.

3 Remove the special screws 48H-150 and the special washers 48H-170 from the aft side wall assembly 48H-010.

(b) Remove the studs 48H-260 and the washers 48H-250 from the cover oxygen container assy 48H-180.

(c) Remove the screws 48H-200, the nuts 48H-210 and the cover oxygen container assy 48H-180 from the angle 48H-190.

(d) Remove the screws 48H-240, the washers 48H-250 and the angle 48H-190 from the aft side wall assembly 48H-010.

(e) Remove the ground cable from the oxygen container assy 48H-230.

(f) Remove the screws 48H-240, 48H-242, the washers 48H-250 and the oxygen container assy 48H-230 from the angles 48H-220.

(g) Remove the screws 48H-240, the washers 48H-250 and the angles 48H-220 from the aft side wall assembly 48H-010.

(h) Remove the screws 48H-300, the washers 48H-250 and the angle 48H-350 from the aft side wall assembly 48H-010.

(i) Remove the caps 48H-310, the screws 48H-300, 48H-320, the washers 48H-250 and the post assembly 48H-270.

(j) Disassemble the post assembly 48H-270 as follows:

1 Remove the screws 48H-280.

(k) Remove the screws 48H-040, 48H-050 and the fittings 48H-020, 48H-030 from the aft side wall assembly 48H-010.

TASK 25-41-51-000-825-L01
D2549010401400 D2549020410200 D2549020500200 D2549020501600 D2549020601600 D2549030411600 D2549030411800 D2549030414800 D2549030700000 D2549030700600 D2549030702800 D2549030703000 D2549030703600 D2549030703800 D2549040501800 D2549040502000 R225401133-000 R225401697-000 R225401697-002 R225401803-000 R225401803-002

247. Removal of the Side Wall

A. General

A complete disassembly of the component is not necessary and not recommended.

Do not disassemble the component more than it is necessary for:

- Cleaning
- Visual Inspection
- Replacement of defective parts.

B. Job Set-up Information
(1) Consumable Materials

REFERENCE	DESIGNATION
08-007	Sealant, High Temperature
08-017A	Adhesive Structuralflexible

Table 3762
Consumable Materials

(2) Fixtures, Tools, Test and Support Equipment

REFERENCE	DESIGNATION
	hot air blower

Table 3763
Fixtures, Tools, Test and Support Equipment

C. Procedure

WARNING: **BE CAREFUL WHEN YOU USE SOLVENTS/CLEANING AGENTS, SEALANTS AND OTHER MATERIALS. OBEY THE MATERIAL MANUFACTURER'S INSTRUCTIONS AND THE LOCAL REGULATIONS. MAKE SURE THAT THERE IS A GOOD FLOW OF AIR THROUGH THE WORK AREA. DO NOT BREATHE THE FUMES. DO NOT SMOKE. DO NOT USE THESE MATERIALS NEAR A FLAME, SPARKS OR SOURCES OF HEAT. USE PROTECTIVE CLOTHING, GOGGLES AND GLOVES. IF YOU GET ONE OF THESE MATERIALS ON YOUR SKIN OR IN YOUR EYES, FLUSH IT AWAY WITH A FLOW OF CLEAN WATER. IF YOU GET ONE OF THESE MATERIALS IN YOUR MOUTH, GET IMMEDIATE MEDICAL AID. IN GENERAL, THESE MATERIALS ARE POISONOUS, FLAMMABLE AND SKIN IRRITANTS.**

WARNING: **KEEP ALL HYDROCARBONS (FUELS, LUBRICANTS, ETC.) AWAY FROM ALL SOURCES OF OXYGEN. OXYGEN BECOMES EXPLOSIVE WHEN IT TOUCHES HYDROCARBONS.**

WARNING: **TO PREVENT CONTAMINATION OF THE OXYGEN SYSTEM, MAKE SURE THAT YOUR HANDS AND ALL THE TOOLS ARE CLEAN.**

CAUTION: **PUT DRY, CLEAN, METAL OR PLASTIC PLUGS ON ALL PIPES OR UNITS REMOVED TEMPORARILY. PUT EACH PIPE OR UNIT IN A SEALED VINYL BAG. UNWANTED MATERIALS IN THE OXYGEN SYSTEM CAN DAMAGE THE SYSTEM.**

CAUTION: **DO ALL THE WORK ON A CLEAN, SOFT SURFACE TO PREVENT DAMAGE TO THE COMPONENTS.**

SUB TASK 25-41-51-010-115-A01
D2549020501600

1. Removal of the Side Wall (48J-1)

NOTE: **See TABLE 3764 for the references for the replacement procedures of permanent installed parts.**

More data for bonded parts are given in column SEE REPAIR TASK. Use the data for the selection of the related repair solution.

IPL FIG. ITEM	COMPONENT PART NAME	IPL FIG. ITEM	REPLACEMENT PART NAME	SEE REPAIR TASK
48J-001 48J-230	Side Wall Post Assembly	48J-250	Nut	TBD
48J-001 48J-010	Side Wall Aft Side Wall Assembly	48J-470	Reinforcing Strip	TBD Material No. 08-017A Adhesive Structuralflexible

Table 3764
Reference list for the replacement of permanent installed parts

(a) Remove and disassemble the handle assembly 48J-290 as follows:

1 Remove the security pins 48J-310 from the handle assembly 48J-290.

2 Remove the handle assembly 48J-290 from the aft side wall assembly 48J-010.

3 Remove the special screws 48J-300 and the special washers 48J-320 from the aft side wall assembly 48J-010.

(b) Remove the screws 48J-260, the washers 48J-210 and the support 48J-330 from the aft side wall assembly 48J-010.

(c) Remove the studs 48J-220 and the washers 48J-210 from the cover oxygen container assy 48J-140.

(d) Remove the screws 48J-160, the nuts 48J-170 and the cover oxygen container assy 48J-140 from the angle 48J-150.

(e) Remove the screws 48J-200, the washers 48J-210 and the angle 48J-150 from the aft side wall assembly 48J-010.

(f) Remove the ground cable from the oxygen container assy 48J-190.

(g) Remove the screws 48J-200, the washers 48J-210 and the oxygen container assy 48J-190 from the angles 48J-180.

(h) Remove the screws 48J-200, the washers 48J-210 and the angles 48J-180 from the aft side wall assembly 48J-010.

(i) Remove the screws 48J-260, the washers 48J-210 and the angle 48J-340 from the aft side wall assembly 48J-010.

(j) Remove the screws 48J-441, the nuts 48J-450, the plates 48J-460 and the single door emergency unlocking device assembly 48J-370 from the post assembly 48J-230.

(k) Disassemble the single door emergency unlocking device assembly 48J-370 as follows:

WARNING: BE CAREFUL WHEN YOU USE MATERIAL NO. 08-007 SEALANT, HIGH TEMPERATURE. OBEY THE MATERIAL MANUFACTURER'S INSTRUCTIONS.

1 Remove the bolt 48J-430 and the emergency unlocking device strike 48J-390 from the emergency unlocking device housing 48J-380.

NOTE: If necessary use a hot air blower to heat up the Material No. 08-007 Sealant, High Temperature to remove the bolt 48J-430.

WARNING: BE CAREFUL WHEN YOU USE MATERIAL NO. 08-007 SEALANT, HIGH TEMPERATURE. OBEY THE MATERIAL MANUFACTURER'S INSTRUCTIONS.

2 Remove the pin 48J-410, the snap catch 48J-420 and the emergency unlocking device pivot 48J-400 from the emergency unlocking device housing 48J-380.

NOTE: If necessary use a hot air blower to heat up the Material No. 08-007 Sealant, High Temperature to remove the snap catch 48J-420 and the pin 48J-410.

(l) Remove the caps 48J-270, the screws 48J-260, 48J-280, the washers 48J-210 and the post assembly 48J-230.

(m) Disassemble the post assembly 48J-230 as follows:

1 Remove the screws 48J-240.

(n) Remove the screws 48J-040, 48J-050 and the fittings 48J-020, 48J-030 from the aft side wall assembly 48J-010.

SUB TASK 25-41-51-010-115-B01
D2549010401400 D2549040501800 D2549040502000 R225401803-000 R225401803-002

2. Removal of the Side Wall (48J-1)

NOTE: **See TABLE 3765 for the references for the replacement procedures of permanent installed parts.**

IPL FIG. ITEM	COMPONENT PART NAME	IPL FIG. ITEM	REPLACEMENT PART NAME	SEE REPAIR TASK
48J-001 48J-230	Side Wall Post Assembly	48J-250	Nut	Replacement of the Riveted Parts

Table 3765
Reference list for the replacement of permanent installed parts

(a) Remove and disassemble the handle assembly 48J-290 as follows:

1 Remove the security pins 48J-310 from the handle assembly 48J-290.

2 Remove the handle assembly 48J-290 from the aft side wall assembly 48J-010.

3 Remove the special screws 48J-300 and the special washers 48J-320 from the aft side wall assembly 48J-010.

(b) Remove the screws 48J-260, the washers 48J-210 and the support 48J-330 from the aft side wall assembly 48J-010.

(c) Remove the toilet seat cover dispenser 48J-350 from the screws 48J-360.

(d) Remove the screws 48J-360 from the aft side wall assembly 48J-010.

(e) Remove the studs 48J-220 and the washers 48J-210 from the cover oxygen container assy 48J-140.

(f) Remove the screws 48J-160, the nuts 48J-170 and the cover oxygen container assy 48J-140 from the angle 48J-150.

(g) Remove the screws 48J-200, the washers 48J-210 and the angle 48J-150 from the aft side wall assembly 48J-010.

(h) Remove the ground cable from the oxygen container assy 48J-190.

(i) Remove the screws 48J-200, 48J-205, the washers 48J-210 and the oxygen container assy 48J-190 from the angles 48J-180.

(j) Remove the screws 48J-200, the washers 48J-210 and the angles 48J-180 from the aft side wall assembly 48J-010.

(k) Remove the screws 48J-260, the washers 48J-210 and the angle 48J-340 from the aft side wall assembly 48J-010.

(l) Remove the screws 48J-440 and the single door emergency unlocking device assembly 48J-370 from the post assembly 48J-230.

(m) Disassemble the single door emergency unlocking device assembly 48J-370 as follows:

WARNING: BE CAREFUL WHEN YOU USE MATERIAL NO. 08-007 SEALANT, HIGH TEMPERATURE. OBEY THE MATERIAL MANUFACTURER'S INSTRUCTIONS.

1 Remove the bolt 48J-430 and the emergency unlocking device strike 48J-390 from the emergency unlocking device housing 48J-380.

NOTE: If necessary use a hot air blower to heat up the Material No. 08-007 Sealant, High Temperature to remove the bolt 48J-430.

WARNING: BE CAREFUL WHEN YOU USE MATERIAL NO. 08-007 SEALANT, HIGH TEMPERATURE. OBEY THE MATERIAL MANUFACTURER'S INSTRUCTIONS.

2 Remove the pin 48J-410, the snap catch 48J-420 and the emergency unlocking device pivot 48J-400 from the emergency unlocking device housing 48J-380.

NOTE: If necessary use a hot air blower to heat up the Material No. 08-007 Sealant, High Temperature to remove the snap catch 48J-420 and the pin 48J-410.

(n) Remove the caps 48J-270, the screws 48J-260, 48J-280, the washers 48J-210 and the post assembly 48J-230.

(o) Disassemble the post assembly 48J-230 as follows:

1 Remove the screws 48J-240.

(p) Remove the screws 48J-040, 48J-050 and the fittings 48J-020, 48J-030 from the aft side wall assembly 48J-010.

SUB TASK 25-41-51-010-115-C01
D2549020410200 D2549030700600 D2549030703000

3. Removal of the Side Wall (48J-1)

NOTE: **See TABLE 3766 for the references for the replacement procedures of permanent installed parts.**

IPL FIG. ITEM	COMPONENT PART NAME	IPL FIG. ITEM	REPLACEMENT PART NAME	SEE REPAIR TASK
48J-001 48J-230	Side Wall Post Assembly	48J-250	Nut	Replacement of the Riveted Parts

Table 3766
Reference list for the replacement of permanent installed parts

(a) Remove and disassemble the handle assembly 48J-290 as follows:

1 Remove the security pins 48J-310 from the handle assembly 48J-290.

2 Remove the handle assembly 48J-290 from the aft side wall assembly 48J-010.

3 Remove the special screws 48J-300 and the special washers 48J-320 from the aft side wall assembly 48J-010.

(b) Remove the screws 48J-260, the washers 48J-210 and the support 48J-330 from the aft side wall assembly 48J-010.

(c) Remove the toilet seat cover dispenser 48J-350 from the screws 48J-360.

(d) Remove the screws 48J-360 from the aft side wall assembly 48J-010.

(e) Remove the studs 48J-220 and the washers 48J-210 from the cover oxygen container assy 48J-140.

(f) Remove the screws 48J-160, the nuts 48J-170 and the cover oxygen container assy 48J-140 from the angle 48J-150.

(g) Remove the screws 48J-200, the washers 48J-210 and the angle 48J-150 from the aft side wall assembly 48J-010.

(h) Remove the ground cable from the oxygen container assy 48J-190.

(i) Remove the screws 48J-200, the washers 48J-210 and the oxygen container assy 48J-190 from the angles 48J-180.

(j) Remove the screws 48J-200, the washers 48J-210 and the angles 48J-180 from the aft side wall assembly 48J-010.

(k) Remove the screws 48J-260, the washers 48J-210 and the angle 48J-340 from the aft side wall assembly 48J-010.

(l) Remove the screws 48J-440 and the single door emergency unlocking device assembly 48J-370 from the post assembly 48J-230.

(m) Disassemble the single door emergency unlocking device assembly 48J-370 as follows:

WARNING: BE CAREFUL WHEN YOU USE MATERIAL NO. 08-007 SEALANT, HIGH TEMPERATURE. OBEY THE MATERIAL MANUFACTURER'S INSTRUCTIONS.

1 Remove the bolt 48J-430 and the emergency unlocking device strike 48J-390 from the emergency unlocking device housing 48J-380.

NOTE: If necessary use a hot air blower to heat up the Material No. 08-007 Sealant, High Temperature to remove the bolt 48J-430.

WARNING: BE CAREFUL WHEN YOU USE MATERIAL NO. 08-007 SEALANT, HIGH TEMPERATURE. OBEY THE MATERIAL MANUFACTURER'S INSTRUCTIONS.

2 Remove the pin 48J-410, the snap catch 48J-420 and the emergency unlocking device pivot 48J-400 from the emergency unlocking device housing 48J-380.

NOTE: If necessary use a hot air blower to heat up the Material No. 08-007 Sealant, High Temperature to remove the snap catch 48J-420 and the pin 48J-410.

(n) Remove the caps 48J-270, the screws 48J-260, 48J-280, the washers 48J-210 and the post assembly 48J-230.

(o) Disassemble the post assembly 48J-230 as follows:

1 Remove the screws 48J-240.

(p) Remove the screws 48J-040, 48J-050 and the fittings 48J-020, 48J-030 from the aft side wall assembly 48J-010.

(q) If necessary, remove the kick strip 48J-520 from the aft side wall assembly 48J-010.

SUB TASK 25-41-51-010-115-D01
D2549030411600 D2549030411800 D2549030700000 D2549030702800
D2549030703600 D2549030703800 R225401697-000 R225401697-002

4. Removal of the Side Wall (48J-1)

NOTE: **See TABLE 3767 for the references for the replacement procedures of permanent installed parts.**

IPL FIG. ITEM	COMPONENT PART NAME	IPL FIG. ITEM	REPLACEMENT PART NAME	SEE REPAIR TASK
48J-001 48J-230	Side Wall Post Assembly	48J-250	Nut	Replacement of the Riveted Parts

Table 3767
Reference list for the replacement of permanent installed parts

(a) Remove and disassemble the handle assembly 48J-290 as follows:

1 Remove the security pins 48J-310 from the handle assembly 48J-290.

2 Remove the handle assembly 48J-290 from the aft side wall assembly 48J-010.

3 Remove the special screws 48J-300 and the special washers 48J-320 from the aft side wall assembly 48J-010.

(b) Remove the screws 48J-260, the washers 48J-210 and the support 48J-330 from the aft side wall assembly 48J-010.

(c) Remove the studs 48J-220 and the washers 48J-210 from the cover oxygen container assy 48J-140.

(d) Remove the screws 48J-160, the nuts 48J-170 and the cover oxygen container assy 48J-140 from the angle 48J-150.

(e) Remove the screws 48J-200, the washers 48J-210 and the angle 48J-150 from the aft side wall assembly 48J-010.

(f) Remove the screws 48J-500, the washers 48J-510, the clamps 48J-490 and the hose 48J-480 from the aft side wall assembly 48J-010.

(g) Remove the ground cable from the oxygen container assy 48J-190.

(h) Remove the screws 48J-200, 48J-205, the washers 48J-210 and the oxygen container assy 48J-190 from the angles 48J-180.

(i) Remove the screws 48J-200, the washers 48J-210 and the angles 48J-180 from the aft side wall assembly 48J-010.

(j) Remove the screws 48J-260, the washers 48J-210 and the angle 48J-340 from the aft side wall assembly 48J-010.

(k) Remove the screws 48J-440 and the single door emergency unlocking device assembly 48J-370 from the post assembly 48J-230.

(l) Disassemble the single door emergency unlocking device assembly 48J-370 as follows:

WARNING: BE CAREFUL WHEN YOU USE MATERIAL NO. 08-007 SEALANT, HIGH TEMPERATURE. OBEY THE MATERIAL MANUFACTURER'S INSTRUCTIONS.

1 Remove the bolt 48J-430 and the emergency unlocking device strike 48J-390 from the emergency unlocking device housing 48J-380.

NOTE: If necessary use a hot air blower to heat up the Material No. 08-007 Sealant, High Temperature to remove the bolt 48J-430.

WARNING: BE CAREFUL WHEN YOU USE MATERIAL NO. 08-007 SEALANT, HIGH TEMPERATURE. OBEY THE MATERIAL MANUFACTURER'S INSTRUCTIONS.

2 Remove the pin 48J-410, the snap catch 48J-420 and the emergency unlocking device pivot 48J-400 from the emergency unlocking device housing 48J-380.

NOTE: If necessary use a hot air blower to heat up the Material No. 08-007 Sealant, High Temperature to remove the snap catch 48J-420 and the pin 48J-410.

(m) Remove the caps 48J-270, the screws 48J-260, 48J-280, the washers 48J-210 and the post assembly 48J-230.

(n) Disassemble the post assembly 48J-230 as follows:

1 Remove the screws 48J-240.

(o) Remove the screws 48J-040, 48J-050 and the fittings 48J-020, 48J-030 from the aft side wall assembly 48J-010.

SUB TASK 25-41-51-010-115-E01
D2549030414800

5. Removal of the Side Wall (48J-1)

NOTE: **See TABLE 3768 for the references for the replacement procedures of permanent installed parts.**

IPL FIG. ITEM	COMPONENT PART NAME	IPL FIG. ITEM	REPLACEMENT PART NAME	SEE REPAIR TASK
48J-001 48J-230	Side Wall Post Assembly	48J-250	Nut	Replacement of the Riveted Parts

Table 3768
Reference list for the replacement of permanent installed parts

(a) Remove and disassemble the handle assembly 48J-290 as follows:

1 Remove the security pins 48J-310 from the handle assembly 48J-290.

2 Remove the handle assembly 48J-290 from the aft side wall assembly 48J-010.

3 Remove the special screws 48J-300 and the special washers 48J-320 from the aft side wall assembly 48J-010.

(b) Remove the screws 48J-260, the washers 48J-210 and the support 48J-330 from the aft side wall assembly 48J-010.

(c) Remove the studs 48J-220 and the washers 48J-210 from the cover oxygen container assy 48J-140.

(d) Remove the screws 48J-160, the nuts 48J-170 and the cover oxygen container assy 48J-140 from the angle 48J-150.

(e) Remove the screws 48J-200, the washers 48J-210 and the angle 48J-150 from the aft side wall assembly 48J-010.

(f) Remove the ground cable from the oxygen container assy 48J-190.

(g) Remove the screws 48J-200, the washers 48J-210 and the oxygen container assy 48J-190 from the angles 48J-180.

(h) Remove the screws 48J-200, the washers 48J-210 and the angles 48J-180 from the aft side wall assembly 48J-010.

(i) Remove the screws 48J-260, the washers 48J-210 and the angle 48J-340 from the aft side wall assembly 48J-010.

(j) Remove the screws 48J-440 and the single door emergency unlocking device assembly 48J-370 from the post assembly 48J-230.

(k) Disassemble the single door emergency unlocking device assembly 48J-370 as follows:

WARNING: BE CAREFUL WHEN YOU USE MATERIAL NO. 08-007 SEALANT, HIGH TEMPERATURE. OBEY THE MATERIAL MANUFACTURER'S INSTRUCTIONS.

1 Remove the bolt 48J-430 and the emergency unlocking device strike 48J-390 from the emergency unlocking device housing 48J-380.

NOTE: If necessary use a hot air blower to heat up the Material No. 08-007 Sealant, High Temperature to remove the bolt 48J-430.

WARNING: BE CAREFUL WHEN YOU USE MATERIAL NO. 08-007 SEALANT, HIGH TEMPERATURE. OBEY THE MATERIAL MANUFACTURER'S INSTRUCTIONS.

2 Remove the pin 48J-410, the snap catch 48J-420 and the emergency unlocking device pivot 48J-400 from the emergency unlocking device housing 48J-380.

NOTE: If necessary use a hot air blower to heat up the Material No. 08-007 Sealant, High Temperature to remove the snap catch 48J-420 and the pin 48J-410.

(l) Remove the caps 48J-270, the screws 48J-260, 48J-280, the washers 48J-210 and the post assembly 48J-230.

(m) Disassemble the post assembly 48J-230 as follows:

1 Remove the screws 48J-240.

(n) Remove the screws 48J-040, 48J-050 and the fittings 48J-020, 48J-030 from the aft side wall assembly 48J-010.

SUB TASK 25-41-51-010-115-F01
D2549020500200 D2549020601600 R225401133-000

6. Removal of the Side Wall (48J-1)

NOTE: **See TABLE 3769 for the references for the replacement procedures of permanent installed parts.**

IPL FIG. ITEM	COMPONENT PART NAME	IPL FIG. ITEM	REPLACEMENT PART NAME	SEE REPAIR TASK
48J-001 48J-230	Side Wall Post Assembly	48J-250	Nut	TBD

Table 3769
Reference list for the replacement of permanent installed parts

(a) Remove and disassemble the handle assembly 48J-290 as follows:

1 Remove the security pins 48J-310 from the handle assembly 48J-290.

2 Remove the handle assembly 48J-290 from the aft side wall assembly 48J-010.

3 Remove the special screws 48J-300 and the special washers 48J-320 from the aft side wall assembly 48J-010.

(b) Remove the studs 48J-220 and the washers 48J-210 from the cover oxygen container assy 48J-140.

(c) Remove the screws 48J-160, the nuts 48J-170 and the cover oxygen container assy 48J-140 from the angle 48J-150.

(d) Remove the screws 48J-200, the washers 48J-210 and the angle 48J-150 from the aft side wall assembly 48J-010.

(e) Remove the ground cable from the oxygen container assy 48J-190.

(f) Remove the screws 48J-200, the washers 48J-210 and the oxygen container assy 48J-190 from the angles 48J-180.

(g) Remove the screws 48J-200, the washers 48J-210 and the angles 48J-180 from the aft side wall assembly 48J-010.

(h) Remove the screws 48J-260, the washers 48J-210 and the angle 48J-340 from the aft side wall assembly 48J-010.

(i) Remove the caps 48J-270, the screws 48J-260, 48J-280, the washers 48J-210 and the post assembly 48J-230.

(j) Disassemble the post assembly 48J-230 as follows:

1 Remove the screws 48J-240.

(k) Remove the screws 48J-040, 48J-050 and the fittings 48J-020, 48J-030 from the aft side wall assembly 48J-010.

TASK 25-41-51-000-825-M01
D2547160900200 D2547160900400 D2549010401600 D2549010403800 D2549010404400 D2549010406200 D2549010613600 D2549020300400 D2549020300600 D2549020300800 D2549020403600 D2549020408000 D2549020409200 D2549020409400 D2549020409600 D2549020409800 D2549020410600 D2549020804400 D2549030412800 D2549030413000 D2549030702400 D2549030705200 R225401602-000 R225401643-006 R225401643-008 R225401689-004 R225401689-006 R225401691-000 R225401691-002

248. Removal of the Side Wall

A. General

A complete disassembly of the component is not necessary and not recommended.

Do not disassemble the component more than it is necessary for:

- Cleaning
- Visual Inspection
- Replacement of defective parts.

B. Job Set-up Information
(1) Consumable Materials

REFERENCE	DESIGNATION
08-007	Sealant, High Temperature

Table 3770
Consumable Materials

(2) Fixtures, Tools, Test and Support Equipment

REFERENCE	DESIGNATION
	hot air blower

Table 3771
Fixtures, Tools, Test and Support Equipment

C. Procedure

WARNING: **BE CAREFUL WHEN YOU USE SOLVENTS/CLEANING AGENTS, SEALANTS AND OTHER MATERIALS. OBEY THE MATERIAL MANUFACTURER'S INSTRUCTIONS AND THE LOCAL REGULATIONS. MAKE SURE THAT THERE IS A GOOD FLOW OF AIR THROUGH THE WORK AREA. DO NOT BREATHE THE FUMES. DO NOT SMOKE. DO NOT USE THESE MATERIALS NEAR A FLAME, SPARKS OR SOURCES OF HEAT. USE PROTECTIVE CLOTHING, GOGGLES AND GLOVES. IF YOU GET ONE OF THESE MATERIALS ON YOUR SKIN OR IN YOUR EYES, FLUSH IT AWAY WITH A FLOW OF CLEAN WATER. IF YOU GET ONE OF THESE MATERIALS IN YOUR MOUTH, GET IMMEDIATE MEDICAL AID. IN GENERAL, THESE MATERIALS ARE POISONOUS, FLAMMABLE AND SKIN IRRITANTS.**

WARNING: **KEEP ALL HYDROCARBONS (FUELS, LUBRICANTS, ETC.) AWAY FROM ALL SOURCES OF OXYGEN. OXYGEN BECOMES EXPLOSIVE WHEN IT TOUCHES HYDROCARBONS.**

WARNING: **TO PREVENT CONTAMINATION OF THE OXYGEN SYSTEM, MAKE SURE THAT YOUR HANDS AND ALL THE TOOLS ARE CLEAN.**

CAUTION: **PUT DRY, CLEAN, METAL OR PLASTIC PLUGS ON ALL PIPES OR UNITS REMOVED TEMPORARILY. PUT EACH PIPE OR UNIT IN A SEALED VINYL BAG. UNWANTED MATERIALS IN THE OXYGEN SYSTEM CAN DAMAGE THE SYSTEM.**

CAUTION: **DO ALL THE WORK ON A CLEAN, SOFT SURFACE TO PREVENT DAMAGE TO THE COMPONENTS.**

SUB TASK 25-41-51-010-116-A01
D2549010403800

1. Removal of the Side Wall (48K-1)

NOTE: **See TABLE 3772 for the references for the replacement procedures of permanent installed parts.**

IPL FIG. ITEM	COMPONENT PART NAME	IPL FIG. ITEM	REPLACEMENT PART NAME	SEE REPAIR TASK
48K-001 48K-270	Side Wall Post Assembly	48K-290	Nut	Replacement of the Riveted Parts

Table 3772
Reference list for the replacement of permanent installed parts

(a) Remove and disassemble the handle assemblies 48K-140 as follows:

1 Remove the security pins 48K-160 from the handle assemblies 48K-140.

2 Remove the handle assemblies 48K-140 from the aft side wall assembly 48K-010.

3 Remove the special screws 48K-150 and the special washers 48K-170 from the aft side wall assembly 48K-010.

(b) Remove the toilet seat cover dispenser 48K-330 from the screws 48K-340.

(c) Remove the screws 48K-340 from the aft side wall assembly 48K-010.

(d) Remove the screws 48K-450 and the lavatory picture frame kit 48K-440 from the aft side wall assembly 48K-010.

(e) Remove the studs 48K-260 and the washers 48K-250 from the cover oxygen container assy 48K-180.

(f) Remove the screws 48K-200, the nuts 48K-210 and the cover oxygen container assy 48K-180 from the angle 48K-190.

(g) Remove the screws 48K-240, the washers 48K-250 and the angle 48K-190 from the aft side wall assembly 48K-010.

(h) Remove the ground cable from the oxygen container assy 48K-230.

(i) Remove the screws 48K-240, the washers 48K-250 and the oxygen container assy 48K-230 from the angles 48K-220.

(j) Remove the screws 48K-240, the washers 48K-250 and the angles 48K-220 from the aft side wall assembly 48K-010.

(k) Remove the screws 48K-300, the washers 48K-250 and the angle 48K-350 from the aft side wall assembly 48K-010.

(l) Remove the screws 48K-360 and the single door emergency unlocking device assembly 48K-370 from the post assembly 48K-270.

(m) Disassemble the single door emergency unlocking device assembly 48K-370 as follows:

WARNING: **BE CAREFUL WHEN YOU USE MATERIAL NO. 08-007 SEALANT, HIGH TEMPERATURE. OBEY THE MATERIAL MANUFACTURER'S INSTRUCTIONS.**

1 Remove the bolt 48K-430 and the emergency unlocking device strike 48K-390 from the emergency unlocking device housing 48K-380.

NOTE: **If necessary use a hot air blower to heat up the Material No. 08-007 Sealant, High Temperature to remove the bolt 48K-430.**

WARNING: **BE CAREFUL WHEN YOU USE MATERIAL NO. 08-007 SEALANT, HIGH TEMPERATURE. OBEY THE MATERIAL MANUFACTURER'S INSTRUCTIONS.**

2 Remove the pin 48K-410, the snap catch 48K-420 and the emergency unlocking device pivot 48K-400 from the emergency unlocking device housing 48K-380.

NOTE: **If necessary use a hot air blower to heat up the Material No. 08-007 Sealant, High Temperature to remove the snap catch 48K-420 and the pin 48K-410.**

(n) Remove the caps 48K-310, the screws 48K-300, 48K-320, the washers 48K-250 and the post assembly 48K-270.

(o) Disassemble the post assembly 48K-270 as follows:

1 Remove the screws 48K-280.

(p) Remove the screws 48K-040, 48K-050 and the fittings 48K-020, 48K-030 from the aft side wall assembly 48K-010.

SUB TASK 25-41-51-010-116-B01
D2547160900200 D2549010404400 D2549010406200 D2549020300400 D2549020300800 D2549020408000 D2549020409200 D2549020409400 D2549020409600 D2549030412800 D2549030413000 D2549030702400 D2549030705200 R225401689-004 R225401689-006 R225401691-000 R225401691-002

2. Removal of the Side Wall (48K-1)

NOTE: **See TABLE 3773 for the references for the replacement procedures of permanent installed parts.**

IPL FIG. ITEM	COMPONENT PART NAME	IPL FIG. ITEM	REPLACEMENT PART NAME	SEE REPAIR TASK
48K-001 48K-270	Side Wall Post Assembly	48K-290	Nut	Replacement of the Riveted Parts

Table 3773
Reference list for the replacement of permanent installed parts

(a) Remove and disassemble the handle assemblies 48K-140 as follows:

1 Remove the security pins 48K-160 from the handle assemblies 48K-140.

2 Remove the handle assemblies 48K-140 from the aft side wall assembly 48K-010.

3 Remove the special screws 48K-150 and the special washers 48K-170 from the aft side wall assembly 48K-010.

(b) Remove the toilet seat cover dispenser 48K-330 from the screws 48K-340.

(c) Remove the screws 48K-340 from the aft side wall assembly 48K-010.

(d) Remove the studs 48K-260 and the washers 48K-250 from the cover oxygen container assy 48K-180.

(e) Remove the screws 48K-200, the nuts 48K-210 and the cover oxygen container assy 48K-180 from the angle 48K-190.

(f) Remove the screws 48K-240, the washers 48K-250 and the angle 48K-190 from the aft side wall assembly 48K-010.

(g) Remove the ground cable from the oxygen container assy 48K-230.

(h) Remove the screws 48K-240, 48K-242, the washers 48K-250 and the oxygen container assy 48K-230 from the angles 48K-220.

(i) Remove the screws 48K-240, the washers 48K-250 and the angles 48K-220 from the aft side wall assembly 48K-010.

(j) Remove the screws 48K-300, the washers 48K-250 and the angle 48K-350 from the aft side wall assembly 48K-010.

(k) Remove the screws 48K-360 and the single door emergency unlocking device assembly 48K-370 from the post assembly 48K-270.

(l) Disassemble the single door emergency unlocking device assembly 48K-370 as follows:

WARNING: BE CAREFUL WHEN YOU USE MATERIAL NO. 08-007 SEALANT, HIGH TEMPERATURE. OBEY THE MATERIAL MANUFACTURER'S INSTRUCTIONS.

1 Remove the bolt 48K-430 and the emergency unlocking device strike 48K-390 from the emergency unlocking device housing 48K-380.

NOTE: If necessary use a hot air blower to heat up the Material No. 08-007 Sealant, High Temperature to remove the bolt 48K-430.

WARNING: BE CAREFUL WHEN YOU USE MATERIAL NO. 08-007 SEALANT, HIGH TEMPERATURE. OBEY THE MATERIAL MANUFACTURER'S INSTRUCTIONS.

2 Remove the pin 48K-410, the snap catch 48K-420 and the emergency unlocking device pivot 48K-400 from the emergency unlocking device housing 48K-380.

NOTE: If necessary use a hot air blower to heat up the Material No. 08-007 Sealant, High Temperature to remove the snap catch 48K-420 and the pin 48K-410.

(m) Remove the caps 48K-310, the screws 48K-300, 48K-320, the washers 48K-250 and the post assembly 48K-270.

(n) Disassemble the post assembly 48K-270 as follows:

1 Remove the screws 48K-280.

(o) Remove the screws 48K-040, 48K-050 and the fittings 48K-020, 48K-030 from the aft side wall assembly 48K-010.

(p) Remove the kick strip 48K-460.

SUB TASK 25-41-51-010-116-C01
D2549020300600 D2549020403600 D2549020409800 R225401643-006 R225401643-008

3. Removal of the Side Wall (48K-1)

NOTE: **See TABLE 3774 for the references for the replacement procedures of permanent installed parts.**

IPL FIG. ITEM	COMPONENT PART NAME	IPL FIG. ITEM	REPLACEMENT PART NAME	SEE REPAIR TASK
48K-001 48K-270	Side Wall Post Assembly	48K-290	Nut	Replacement of the Riveted Parts

Table 3774
Reference list for the replacement of permanent installed parts

(a) Remove and disassemble the handle assemblies 48K-140 as follows:

1 Remove the security pins 48K-160 from the handle assemblies 48K-140.

2 Remove the handle assemblies 48K-140 from the aft side wall assembly 48K-010.

3 Remove the special screws 48K-150 and the special washers 48K-170 from the aft side wall assembly 48K-010.

(b) Remove the studs 48K-260 and the washers 48K-250 from the cover oxygen container assy 48K-180.

(c) Remove the screws 48K-200, the nuts 48K-210 and the cover oxygen container assy 48K-180 from the angle 48K-190.

(d) Remove the screws 48K-240, the washers 48K-250 and the angle 48K-190 from the aft side wall assembly 48K-010.

(e) Remove the ground cable from the oxygen container assy 48K-230.

(f) Remove the screws 48K-240, 48K-242, the washers 48K-250 and the oxygen container assy 48K-230 from the angles 48K-220.

(g) Remove the screws 48K-240, the washers 48K-250 and the angles 48K-220 from the aft side wall assembly 48K-010.

(h) Remove the screws 48K-300, the washers 48K-250 and the angle 48K-350 from the aft side wall assembly 48K-010.

(i) Remove the screws 48K-360 and the single door emergency unlocking device assembly 48K-370 from the post assembly 48K-270.

(j) Disassemble the single door emergency unlocking device assembly 48K-370 as follows:

WARNING: BE CAREFUL WHEN YOU USE MATERIAL NO. 08-007 SEALANT, HIGH TEMPERATURE. OBEY THE MATERIAL MANUFACTURER'S INSTRUCTIONS.

1 Remove the bolt 48K-430 and the emergency unlocking device strike 48K-390 from the emergency unlocking device housing 48K-380.

NOTE: If necessary use a hot air blower to heat up the Material No. 08-007 Sealant, High Temperature to remove the bolt 48K-430.

WARNING: BE CAREFUL WHEN YOU USE MATERIAL NO. 08-007 SEALANT, HIGH TEMPERATURE. OBEY THE MATERIAL MANUFACTURER'S INSTRUCTIONS.

2 Remove the pin 48K-410, the snap catch 48K-420 and the emergency unlocking device pivot 48K-400 from the emergency unlocking device housing 48K-380.

NOTE: If necessary use a hot air blower to heat up the Material No. 08-007 Sealant, High Temperature to remove the snap catch 48K-420 and the pin 48K-410.

(k) Remove the caps 48K-310, the screws 48K-300, 48K-320, the washers 48K-250 and the post assembly 48K-270.

(l) Disassemble the post assembly 48K-270 as follows:

1 Remove the screws 48K-280.

(m) Remove the screws 48K-040, 48K-050 and the fittings 48K-020, 48K-030 from the aft side wall assembly 48K-010.

SUB TASK 25-41-51-010-116-D01
D2547160900400 D2549010401600 D2549010613600 D2549020410600 D2549020804400 R225401602-000

4. Removal of the Side Wall (48K-1)

NOTE: **See TABLE 3775 for the references for the replacement procedures of permanent installed parts.**

IPL FIG. ITEM	COMPONENT PART NAME	IPL FIG. ITEM	REPLACEMENT PART NAME	SEE REPAIR TASK
48K-001 48K-270	Side Wall Post Assembly	48K-290	Nut	Replacement of the Riveted Parts

Table 3775
Reference list for the replacement of permanent installed parts

(a) Remove and disassemble the handle assemblies 48K-140 as follows:

1 Remove the security pins 48K-160 from the handle assemblies 48K-140.

2 Remove the handle assemblies 48K-140 from the aft side wall assembly 48K-010.

3 Remove the special screws 48K-150 and the special washers 48K-170 from the aft side wall assembly 48K-010.

(b) Remove the studs 48K-260 and the washers 48K-250 from the cover oxygen container assy 48K-180.

(c) Remove the screws 48K-200, the nuts 48K-210 and the cover oxygen container assy 48K-180 from the angle 48K-190.

(d) Remove the screws 48K-240, the washers 48K-250 and the angle 48K-190 from the aft side wall assembly 48K-010.

(e) Remove the ground cable from the oxygen container assy 48K-230.

(f) Remove the screws 48K-240, 48K-242, the washers 48K-250 and the oxygen container assy 48K-230 from the angles 48K-220.

(g) Remove the screws 48K-240, the washers 48K-250 and the angles 48K-220 from the aft side wall assembly 48K-010.

(h) Remove the screws 48K-300, the washers 48K-250 and the angle 48K-350 from the aft side wall assembly 48K-010.

(i) Remove the screws 48K-360 and the single door emergency unlocking device assembly 48K-370 from the post assembly 48K-270.

(j) Disassemble the single door emergency unlocking device assembly 48K-370 as follows:

WARNING: BE CAREFUL WHEN YOU USE MATERIAL NO. 08-007 SEALANT, HIGH TEMPERATURE. OBEY THE MATERIAL MANUFACTURER'S INSTRUCTIONS.

1 Remove the bolt 48K-430 and the emergency unlocking device strike 48K-390 from the emergency unlocking device housing 48K-380.

NOTE: If necessary use a hot air blower to heat up the Material No. 08-007 Sealant, High Temperature to remove the bolt 48K-430.

WARNING: BE CAREFUL WHEN YOU USE MATERIAL NO. 08-007 SEALANT, HIGH TEMPERATURE. OBEY THE MATERIAL MANUFACTURER'S INSTRUCTIONS.

2 Remove the pin 48K-410, the snap catch 48K-420 and the emergency unlocking device pivot 48K-400 from the emergency unlocking device housing 48K-380.

NOTE: If necessary use a hot air blower to heat up the Material No. 08-007 Sealant, High Temperature to remove the snap catch 48K-420 and the pin 48K-410.

(k) Remove the caps 48K-310, the screws 48K-300, 48K-320, the washers 48K-250 and the post assembly 48K-270.

(l) Disassemble the post assembly 48K-270 as follows:

1 Remove the screws 48K-280.

(m) Remove the screws 48K-040, 48K-050 and the fittings 48K-020, 48K-030 from the aft side wall assembly 48K-010.

TASK 25-41-51-000-825-N01
D2549010402400 D2549010405000 D2549010405400 D2549010405800 D2549010406400 D2549010407000 D2549020301000 D2549020410400 D2549020410800 D2549020411600 D2549020411800 D2549020413000 D2549030413400 D2549030413600 D2549030414400 D2549030414600 D2549030704400 D2549030705600 R225401199-012 R225401627-004

249. Removal of the Side Wall

A. General

A complete disassembly of the component is not necessary and not recommended.

Do not disassemble the component more than it is necessary for:

- Cleaning
- Visual Inspection
- Replacement of defective parts.

B. Job Set-up Information
(1) Consumable Materials

REFERENCE	DESIGNATION
08-007	Sealant, High Temperature

Table 3776
Consumable Materials

(2) Fixtures, Tools, Test and Support Equipment

REFERENCE	DESIGNATION
	hot air blower

Table 3777
Fixtures, Tools, Test and Support Equipment

C. Procedure

WARNING: **BE CAREFUL WHEN YOU USE SOLVENTS/CLEANING AGENTS, SEALANTS AND OTHER MATERIALS. OBEY THE MATERIAL MANUFACTURER'S INSTRUCTIONS AND THE LOCAL REGULATIONS. MAKE SURE THAT THERE IS A GOOD FLOW OF AIR THROUGH THE WORK AREA. DO NOT BREATHE THE FUMES. DO NOT SMOKE. DO NOT USE THESE MATERIALS NEAR A FLAME, SPARKS OR SOURCES OF HEAT. USE PROTECTIVE CLOTHING, GOGGLES AND GLOVES. IF YOU GET ONE OF THESE MATERIALS ON YOUR SKIN OR IN YOUR EYES, FLUSH IT AWAY WITH A FLOW OF CLEAN WATER. IF YOU GET ONE OF THESE MATERIALS IN YOUR MOUTH, GET IMMEDIATE MEDICAL AID. IN GENERAL, THESE MATERIALS ARE POISONOUS, FLAMMABLE AND SKIN IRRITANTS.**

WARNING: **KEEP ALL HYDROCARBONS (FUELS, LUBRICANTS, ETC.) AWAY FROM ALL SOURCES OF OXYGEN. OXYGEN BECOMES EXPLOSIVE WHEN IT TOUCHES HYDROCARBONS.**

WARNING: **TO PREVENT CONTAMINATION OF THE OXYGEN SYSTEM, MAKE SURE THAT YOUR HANDS AND ALL THE TOOLS ARE CLEAN.**

CAUTION: **PUT DRY, CLEAN, METAL OR PLASTIC PLUGS ON ALL PIPES OR UNITS REMOVED TEMPORARILY. PUT EACH PIPE OR UNIT IN A SEALED VINYL BAG. UNWANTED MATERIALS IN THE OXYGEN SYSTEM CAN DAMAGE THE SYSTEM.**

CAUTION: **DO ALL THE WORK ON A CLEAN, SOFT SURFACE TO PREVENT DAMAGE TO THE COMPONENTS.**

SUB TASK 25-41-51-010-119-A01
D2549030413400 D2549030704400

1. Removal of the Side Wall (48L-1)

NOTE: **See TABLE 3778 for the references for the replacement procedures of permanent installed parts.**

IPL FIG. ITEM	COMPONENT PART NAME	IPL FIG. ITEM	REPLACEMENT PART NAME	SEE REPAIR TASK
48L-001 48L-270	Side Wall Post Assembly	48L-290	Nut	Replacement of the Riveted Parts

Table 3778
Reference list for the replacement of permanent installed parts

(a) Remove and disassemble the handle assemblies 48L-140 as follows:

1 Remove the security pins 48L-160 from the handle assemblies 48L-140.

2 Remove the handle assemblies 48L-140 from the aft side wall assembly 48L-010.

3 Remove the special screws 48L-150 and the special washers 48L-170 from the aft side wall assembly 48L-010.

(b) Remove the toilet seat cover dispenser 48L-330 from the screws 48L-340.

(c) Remove the screws 48L-340 from the aft side wall assembly 48L-010.

(d) Remove the screw 48L-450 and the coat hook 48L-440.

(e) Remove the studs 48L-260 and the washers 48L-250 from the cover oxygen container assy 48L-180.

(f) Remove the screws 48L-200, the nuts 48L-210 and the cover oxygen container assy 48L-180 from the angle 48L-190.

(g) Remove the screws 48L-240, the washers 48L-250 and the angle 48L-190 from the aft side wall assembly 48L-010.

(h) Remove the screws 48L-470, the washers 48L-480, the clamps 48L-490 and the hose 48L-460 from the aft side wall assembly 48L-010.

(i) Remove the hose 48L-460 from the oxygen container assy 48L-230.

(j) Remove the ground cable from the oxygen container assy 48L-230.

(k) Remove the screws 48L-240, the washers 48L-250 and the oxygen container assy 48L-230 from the angles 48L-220.

(l) Remove the screws 48L-240, the washers 48L-250 and the angles 48L-220 from the aft side wall assembly 48L-010.

(m) Remove the screws 48L-300, the washers 48L-250 and the angle 48L-350 from the aft side wall assembly 48L-010.

(n) Remove the screws 48L-360 and the single door emergency unlocking device assembly 48L-370 from the post assembly 48L-270.

(o) Disassemble the single door emergency unlocking device assembly 48L-370 as follows:

WARNING: **BE CAREFUL WHEN YOU USE MATERIAL NO. 08-007 SEALANT, HIGH TEMPERATURE. OBEY THE MATERIAL MANUFACTURER'S INSTRUCTIONS.**

1 Remove the bolt 48L-430 and the emergency unlocking device strike 48L-390 from the emergency unlocking device housing 48L-380.

NOTE: **If necessary use a hot air blower to heat up the Material No. 08-007 Sealant, High Temperature to remove the bolt 48L-430.**

WARNING: **BE CAREFUL WHEN YOU USE MATERIAL NO. 08-007 SEALANT, HIGH TEMPERATURE. OBEY THE MATERIAL MANUFACTURER'S INSTRUCTIONS.**

2 Remove the pin 48L-410, the snap catch 48L-420 and the emergency unlocking device pivot 48L-400 from the emergency unlocking device housing 48L-380.

NOTE: **If necessary use a hot air blower to heat up the Material No. 08-007 Sealant, High Temperature to remove the snap catch 48L-420 and the pin 48L-410.**

(p) Remove the caps 48L-310, the screws 48L-300, 48L-320, the washers 48L-250 and the post assembly 48L-270.

(q) Disassemble the post assembly 48L-270 as follows:

1 Remove the screws 48L-280.

(r) Remove the screws 48L-040, 48L-050 and the fittings 48L-020, 48L-030 from the aft side wall assembly 48L-010.

SUB TASK 25-41-51-010-119-B01
D2549030414600 D2549030705600

2. Removal of the Side Wall (48L-1)

NOTE: **See TABLE 3779 for the references for the replacement procedures of permanent installed parts.**

IPL FIG. ITEM	COMPONENT PART NAME	IPL FIG. ITEM	REPLACEMENT PART NAME	SEE REPAIR TASK
48L-001 48L-270	Side Wall Post Assembly	48L-290	Nut	TBD

Table 3779
Reference list for the replacement of permanent installed parts

(a) Remove and disassemble the handle assemblies 48L-140 as follows:

1 Remove the security pins 48L-160 from the handle assemblies 48L-140.

2 Remove the handle assemblies 48L-140 from the aft side wall assembly 48L-010.

3 Remove the special screws 48L-150 and the special washers 48L-170 from the aft side wall assembly 48L-010.

(b) Remove the toilet seat cover dispenser 48L-330 from the screws 48L-340.

(c) Remove the screws 48L-340 from the aft side wall assembly 48L-010.

(d) Remove the screw 48L-450 and the coat hook 48L-440.

(e) Remove the studs 48L-260 and the washers 48L-250 from the cover oxygen container assy 48L-180.

(f) Remove the screws 48L-200, the nuts 48L-210 and the cover oxygen container assy 48L-180 from the angle 48L-190.

(g) Remove the screws 48L-240, the washers 48L-250 and the angle 48L-190 from the aft side wall assembly 48L-010.

(h) Remove the ground cable from the oxygen container assy 48L-230.

(i) Remove the screws 48L-240, the washers 48L-250 and the oxygen container assy 48L-230 from the angles 48L-220.

(j) Remove the screws 48L-240, the washers 48L-250 and the angles 48L-220 from the aft side wall assembly 48L-010.

(k) Remove the screws 48L-300, the washers 48L-250 and the angle 48L-350 from the aft side wall assembly 48L-010.

(l) Remove the screws 48L-360 and the single door emergency unlocking device assembly 48L-370 from the post assembly 48L-270.

(m) Disassemble the single door emergency unlocking device assembly 48L-370 as follows:

WARNING: BE CAREFUL WHEN YOU USE MATERIAL NO. 08-007 SEALANT, HIGH TEMPERATURE. OBEY THE MATERIAL MANUFACTURER'S INSTRUCTIONS.

1 Remove the bolt 48L-430 and the emergency unlocking device strike 48L-390 from the emergency unlocking device housing 48L-380.

NOTE: If necessary use a hot air blower to heat up the Material No. 08-007 Sealant, High Temperature to remove the bolt 48L-430.

WARNING: BE CAREFUL WHEN YOU USE MATERIAL NO. 08-007 SEALANT, HIGH TEMPERATURE. OBEY THE MATERIAL MANUFACTURER'S INSTRUCTIONS.

2 Remove the pin 48L-410, the snap catch 48L-420 and the emergency unlocking device pivot 48L-400 from the emergency unlocking device housing 48L-380.

NOTE: If necessary use a hot air blower to heat up the Material No. 08-007 Sealant, High Temperature to remove the snap catch 48L-420 and the pin 48L-410.

(n) Remove the caps 48L-310, the screws 48L-300, 48L-320, the washers 48L-250 and the post assembly 48L-270.

(o) Disassemble the post assembly 48L-270 as follows:

1 Remove the screws 48L-280.

(p) Remove the screws 48L-040, 48L-050 and the fittings 48L-020, 48L-030 from the aft side wall assembly 48L-010.

SUB TASK 25-41-51-010-119-C01
D2549010405400

3. Removal of the Side Wall (48L-1)

NOTE: **See TABLE 3780 for the references for the replacement procedures of permanent installed parts.**

IPL FIG. ITEM	COMPONENT PART NAME	IPL FIG. ITEM	REPLACEMENT PART NAME	SEE REPAIR TASK
48L-001 48L-270	Side Wall Post Assembly	48L-290	Nut	Replacement of the Riveted Parts

Table 3780
Reference list for the replacement of permanent installed parts

(a) Remove and disassemble the handle assemblies 48L-140 as follows:

1 Remove the security pins 48L-160 from the handle assemblies 48L-140.

2 Remove the handle assemblies 48L-140 from the aft side wall assembly 48L-010.

3 Remove the special screws 48L-150 and the special washers 48L-170 from the aft side wall assembly 48L-010.

(b) Remove the toilet seat cover dispenser 48L-330 from the screws 48L-340.

(c) Remove the screws 48L-340 from the aft side wall assembly 48L-010.

(d) Remove the screw 48L-450 and the coat hook 48L-440.

(e) Remove the studs 48L-260 and the washers 48L-250 from the cover oxygen container assy 48L-180.

(f) Remove the screws 48L-200, the nuts 48L-210 and the cover oxygen container assy 48L-180 from the angle 48L-190.

(g) Remove the screws 48L-240, the washers 48L-250 and the angle 48L-190 from the aft side wall assembly 48L-010.

(h) Remove the ground cable from the oxygen container assy 48L-230.

(i) Remove the screws 48L-240, the washers 48L-250 and the oxygen container assy 48L-230 from the angles 48L-220.

(j) Remove the screws 48L-240, the washers 48L-250 and the angles 48L-220 from the aft side wall assembly 48L-010.

(k) Remove the screws 48L-300, the washers 48L-250 and the angle 48L-350 from the aft side wall assembly 48L-010.

(l) Remove the screws 48L-360 and the single door emergency unlocking device assembly 48L-370 from the post assembly 48L-270.

(m) Disassemble the single door emergency unlocking device assembly 48L-370 as follows:

WARNING: BE CAREFUL WHEN YOU USE MATERIAL NO. 08-007 SEALANT, HIGH TEMPERATURE. OBEY THE MATERIAL MANUFACTURER'S INSTRUCTIONS.

1 Remove the bolt 48L-430 and the emergency unlocking device strike 48L-390 from the emergency unlocking device housing 48L-380.

NOTE: If necessary use a hot air blower to heat up the Material No. 08-007 Sealant, High Temperature to remove the bolt 48L-430.

WARNING: BE CAREFUL WHEN YOU USE MATERIAL NO. 08-007 SEALANT, HIGH TEMPERATURE. OBEY THE MATERIAL MANUFACTURER'S INSTRUCTIONS.

2 Remove the pin 48L-410, the snap catch 48L-420 and the emergency unlocking device pivot 48L-400 from the emergency unlocking device housing 48L-380.

NOTE: If necessary use a hot air blower to heat up the Material No. 08-007 Sealant, High Temperature to remove the snap catch 48L-420 and the pin 48L-410.

(n) Remove the caps 48L-310, the screws 48L-300, 48L-320, the washers 48L-250 and the post assembly 48L-270.

(o) Disassemble the post assembly 48L-270 as follows:

1 Remove the screws 48L-280.

(p) Remove the screws 48L-040, 48L-050 and the fittings 48L-020, 48L-030 from the aft side wall assembly 48L-010.

SUB TASK 25-41-51-010-119-D01
D2549020410400 D2549030414400

4. Removal of the Side Wall (48L-1)

NOTE: **See TABLE 3781 for the references for the replacement procedures of permanent installed parts.**

IPL FIG. ITEM	COMPONENT PART NAME	IPL FIG. ITEM	REPLACEMENT PART NAME	SEE REPAIR TASK
48L-001 48L-270	Side Wall Post Assembly	48L-290	Nut	Replacement of the Riveted Parts

Table 3781
Reference list for the replacement of permanent installed parts

(a) Remove and disassemble the handle assemblies 48L-140 as follows:

1 Remove the security pins 48L-160 from the handle assemblies 48L-140.

2 Remove the handle assemblies 48L-140 from the aft side wall assembly 48L-010.

3 Remove the special screws 48L-150 and the special washers 48L-170 from the aft side wall assembly 48L-010.

(b) Remove the toilet seat cover dispenser 48L-330 from the screws 48L-340.

(c) Remove the screws 48L-340 from the aft side wall assembly 48L-010.

(d) Remove the studs 48L-260 and the washers 48L-250 from the cover oxygen container assy 48L-180.

(e) Remove the screws 48L-200, the nuts 48L-210 and the cover oxygen container assy 48L-180 from the angle 48L-190.

(f) Remove the screws 48L-240, the washers 48L-250 and the angle 48L-190 from the aft side wall assembly 48L-010.

(g) Remove the ground cable from the oxygen container assy 48L-230.

(h) Remove the screws 48L-240, the washers 48L-250 and the oxygen container assy 48L-230 from the angles 48L-220.

(i) Remove the screws 48L-240, the washers 48L-250 and the angles 48L-220 from the aft side wall assembly 48L-010.

(j) Remove the screws 48L-300, the washers 48L-250 and the angle 48L-350 from the aft side wall assembly 48L-010.

(k) Remove the screws 48L-360 and the single door emergency unlocking device assembly 48L-370 from the post assembly 48L-270.

(l) Disassemble the single door emergency unlocking device assembly 48L-370 as follows:

WARNING: BE CAREFUL WHEN YOU USE MATERIAL NO. 08-007 SEALANT, HIGH TEMPERATURE. OBEY THE MATERIAL MANUFACTURER'S INSTRUCTIONS.

1 Remove the bolt 48L-430 and the emergency unlocking device strike 48L-390 from the emergency unlocking device housing 48L-380.

NOTE: If necessary use a hot air blower to heat up the Material No. 08-007 Sealant, High Temperature to remove the bolt 48L-430.

WARNING: BE CAREFUL WHEN YOU USE MATERIAL NO. 08-007 SEALANT, HIGH TEMPERATURE. OBEY THE MATERIAL MANUFACTURER'S INSTRUCTIONS.

2 Remove the pin 48L-410, the snap catch 48L-420 and the emergency unlocking device pivot 48L-400 from the emergency unlocking device housing 48L-380.

NOTE: If necessary use a hot air blower to heat up the Material No. 08-007 Sealant, High Temperature to remove the snap catch 48L-420 and the pin 48L-410.

(m) Remove the caps 48L-310, the screws 48L-300, 48L-320, the washers 48L-250 and the post assembly 48L-270.

(n) Disassemble the post assembly 48L-270 as follows:

1 Remove the screws 48L-280.

(o) Remove the screws 48L-040, 48L-050 and the fittings 48L-020, 48L-030 from the aft side wall assembly 48L-010.

SUB TASK 25-41-51-010-119-E01
D2549010402400 D2549010406400 D2549020410800 D2549020411800

5. Removal of the Side Wall (48L-1)

NOTE: **See TABLE 3782 for the references for the replacement procedures of permanent installed parts.**

IPL FIG. ITEM	COMPONENT PART NAME	IPL FIG. ITEM	REPLACEMENT PART NAME	SEE REPAIR TASK
48L-001 48L-270	Side Wall Post Assembly	48L-290	Nut	Replacement of the Riveted Parts

Table 3782
Reference list for the replacement of permanent installed parts

(a) Remove and disassemble the handle assemblies 48L-140 as follows:

1 Remove the security pins 48L-160 from the handle assemblies 48L-140.

2 Remove the handle assemblies 48L-140 from the aft side wall assembly 48L-010.

3 Remove the special screws 48L-150 and the special washers 48L-170 from the aft side wall assembly 48L-010.

(b) Remove the toilet seat cover dispenser 48L-330 from the screws 48L-340.

(c) Remove the screws 48L-340 from the aft side wall assembly 48L-010.

(d) Remove the studs 48L-260 and the washers 48L-250 from the cover oxygen container assy 48L-180.

(e) Remove the screws 48L-200, the nuts 48L-210 and the cover oxygen container assy 48L-180 from the angle 48L-190.

(f) Remove the screws 48L-240, the washers 48L-250 and the angle 48L-190 from the aft side wall assembly 48L-010.

(g) Remove the ground cable from the oxygen container assy 48L-230.

(h) Remove the screws 48L-240, the washers 48L-250 and the oxygen container assy 48L-230 from the angles 48L-220.

(i) Remove the screws 48L-240, the washers 48L-250 and the angles 48L-220 from the aft side wall assembly 48L-010.

(j) Remove the screws 48L-300, the washers 48L-250 and the angle 48L-350 from the aft side wall assembly 48L-010.

(k) Remove the screws 48L-360 and the single door emergency unlocking device assembly 48L-370 from the post assembly 48L-270.

(l) Disassemble the single door emergency unlocking device assembly 48L-370 as follows:

WARNING: BE CAREFUL WHEN YOU USE MATERIAL NO. 08-007 SEALANT, HIGH TEMPERATURE. OBEY THE MATERIAL MANUFACTURER'S INSTRUCTIONS.

1 Remove the bolt 48L-430 and the emergency unlocking device strike 48L-390 from the emergency unlocking device housing 48L-380.

NOTE: If necessary use a hot air blower to heat up the Material No. 08-007 Sealant, High Temperature to remove the bolt 48L-430.

WARNING: BE CAREFUL WHEN YOU USE MATERIAL NO. 08-007 SEALANT, HIGH TEMPERATURE. OBEY THE MATERIAL MANUFACTURER'S INSTRUCTIONS.

2 Remove the pin 48L-410, the snap catch 48L-420 and the emergency unlocking device pivot 48L-400 from the emergency unlocking device housing 48L-380.

NOTE: If necessary use a hot air blower to heat up the Material No. 08-007 Sealant, High Temperature to remove the snap catch 48L-420 and the pin 48L-410.

(m) Remove the caps 48L-310, the screws 48L-300, 48L-320, the washers 48L-250 and the post assembly 48L-270.

(n) Disassemble the post assembly 48L-270 as follows:

1 Remove the screws 48L-280.

(o) Remove the screws 48L-040, 48L-050 and the fittings 48L-020, 48L-030 from the aft side wall assembly 48L-010.

SUB TASK 25-41-51-010-119-F01
D2549010405000 D2549010405800 D2549010407000

6. Removal of the Side Wall (48L-1)

NOTE: **See TABLE 3783 for the references for the replacement procedures of permanent installed parts.**

IPL FIG. ITEM	COMPONENT PART NAME	IPL FIG. ITEM	REPLACEMENT PART NAME	SEE REPAIR TASK
48L-001 48L-270	Side Wall Post Assembly	48L-290	Nut	Replacement of the Riveted Parts

Table 3783
Reference list for the replacement of permanent installed parts

(a) Remove and disassemble the handle assemblies 48L-140 as follows:

1 Remove the security pins 48L-160 from the handle assemblies 48L-140.

2 Remove the handle assemblies 48L-140 from the aft side wall assembly 48L-010.

3 Remove the special screws 48L-150 and the special washers 48L-170 from the aft side wall assembly 48L-010.

(b) Remove the studs 48L-260 and the washers 48L-250 from the cover oxygen container assy 48L-180.

(c) Remove the screws 48L-200, the nuts 48L-210 and the cover oxygen container assy 48L-180 from the angle 48L-190.

(d) Remove the screws 48L-240, the washers 48L-250 and the angle 48L-190 from the aft side wall assembly 48L-010.

(e) Remove the ground cable from the oxygen container assy 48L-230.

(f) Remove the screws 48L-240, the washers 48L-250 and the oxygen container assy 48L-230 from the angles 48L-220.

(g) Remove the screws 48L-240, the washers 48L-250 and the angles 48L-220 from the aft side wall assembly 48L-010.

(h) Remove the screws 48L-300, the washers 48L-250 and the angle 48L-350 from the aft side wall assembly 48L-010.

(i) Remove the screws 48L-360 and the single door emergency unlocking device assembly 48L-370 from the post assembly 48L-270.

(j) Disassemble the single door emergency unlocking device assembly 48L-370 as follows:

WARNING: BE CAREFUL WHEN YOU USE MATERIAL NO. 08-007 SEALANT, HIGH TEMPERATURE. OBEY THE MATERIAL MANUFACTURER'S INSTRUCTIONS.

1 Remove the bolt 48L-430 and the emergency unlocking device strike 48L-390 from the emergency unlocking device housing 48L-380.

NOTE: If necessary use a hot air blower to heat up the Material No. 08-007 Sealant, High Temperature to remove the bolt 48L-430.

WARNING: BE CAREFUL WHEN YOU USE MATERIAL NO. 08-007 SEALANT, HIGH TEMPERATURE. OBEY THE MATERIAL MANUFACTURER'S INSTRUCTIONS.

2 Remove the pin 48L-410, the snap catch 48L-420 and the emergency unlocking device pivot 48L-400 from the emergency unlocking device housing 48L-380.

NOTE: If necessary use a hot air blower to heat up the Material No. 08-007 Sealant, High Temperature to remove the snap catch 48L-420 and the pin 48L-410.

(k) Remove the caps 48L-310, the screws 48L-300, 48L-320, the washers 48L-250 and the post assembly 48L-270.

(l) Disassemble the post assembly 48L-270 as follows:

1 Remove the screws 48L-280.

(m) Remove the screws 48L-040, 48L-050 and the fittings 48L-020, 48L-030 from the aft side wall assembly 48L-010.

SUB TASK 25-41-51-010-119-G01
D2549020301000 D2549020411600 D2549020413000 D2549030413600 R225401199-012 R225401627-004

7. Removal of the Side Wall (48L-1)

NOTE: **See TABLE 3784 for the references for the replacement procedures of permanent installed parts.**

IPL FIG. ITEM	COMPONENT PART NAME	IPL FIG. ITEM	REPLACEMENT PART NAME	SEE REPAIR TASK
48L-001 48L-270	Side Wall Post Assembly	48L-290	Nut	Replacement of the Riveted Parts

Table 3784
Reference list for the replacement of permanent installed parts

(a) Remove and disassemble the handle assemblies 48L-140 as follows:

1 Remove the security pins 48L-160 from the handle assemblies 48L-140.

2 Remove the handle assemblies 48L-140 from the aft side wall assembly 48L-010.

3 Remove the special screws 48L-150 and the special washers 48L-170 from the aft side wall assembly 48L-010.

(b) Remove the studs 48L-260 and the washers 48L-250 from the cover oxygen container assy 48L-180.

(c) Remove the screws 48L-200, the nuts 48L-210 and the cover oxygen container assy 48L-180 from the angle 48L-190.

(d) Remove the screws 48L-240, the washers 48L-250 and the angle 48L-190 from the aft side wall assembly 48L-010.

(e) Remove the ground cable from the oxygen container assy 48L-230.

(f) Remove the screws 48L-240, 48L-242, the washers 48L-250 and the oxygen container assy 48L-230 from the angles 48L-220.

(g) Remove the screws 48L-240, the washers 48L-250 and the angles 48L-220 from the aft side wall assembly 48L-010.

(h) Remove the screws 48L-300, the washers 48L-250 and the angle 48L-350 from the aft side wall assembly 48L-010.

(i) Remove the screws 48L-360 and the single door emergency unlocking device assembly 48L-370 from the post assembly 48L-270.

(j) Disassemble the single door emergency unlocking device assembly 48L-370 as follows:

WARNING: BE CAREFUL WHEN YOU USE MATERIAL NO. 08-007 SEALANT, HIGH TEMPERATURE. OBEY THE MATERIAL MANUFACTURER'S INSTRUCTIONS.

1 Remove the bolt 48L-430 and the emergency unlocking device strike 48L-390 from the emergency unlocking device housing 48L-380.

NOTE: If necessary use a hot air blower to heat up the Material No. 08-007 Sealant, High Temperature to remove the bolt 48L-430.

WARNING: BE CAREFUL WHEN YOU USE MATERIAL NO. 08-007 SEALANT, HIGH TEMPERATURE. OBEY THE MATERIAL MANUFACTURER'S INSTRUCTIONS.

2 Remove the pin 48L-410, the snap catch 48L-420 and the emergency unlocking device pivot 48L-400 from the emergency unlocking device housing 48L-380.

NOTE: If necessary use a hot air blower to heat up the Material No. 08-007 Sealant, High Temperature to remove the snap catch 48L-420 and the pin 48L-410.

(k) Remove the caps 48L-310, the screws 48L-300, 48L-320, the washers 48L-250 and the post assembly 48L-270.

(l) Disassemble the post assembly 48L-270 as follows:

1 Remove the screws 48L-280.

(m) Remove the screws 48L-040, 48L-050 and the fittings 48L-020, 48L-030 from the aft side wall assembly 48L-010.

TASK 25-41-51-000-825-P01
D2549020301600 D2549020412400 D2549020413200 D2549020413600 D2549020413800 D2549020414000 D2549020414200 D2549020414600 D2549020414800 D2549030702000 D2549030702200 D2549030703200 R225401136-008 R225401136-014

250. Removal of the Side Wall

A. General

A complete disassembly of the component is not necessary and not recommended.

Do not disassemble the component more than it is necessary for:

- Cleaning
- Visual Inspection
- Replacement of defective parts.

B. Job Set-up Information
(1) Consumable Materials

REFERENCE	DESIGNATION
08-007	Sealant, High Temperature

Table 3785
Consumable Materials

(2) Fixtures, Tools, Test and Support Equipment

REFERENCE	DESIGNATION
	hot air blower

Table 3786
Fixtures, Tools, Test and Support Equipment

C. Procedure

WARNING: **BE CAREFUL WHEN YOU USE SOLVENTS/CLEANING AGENTS, SEALANTS AND OTHER MATERIALS. OBEY THE MATERIAL MANUFACTURER'S INSTRUCTIONS AND THE LOCAL REGULATIONS. MAKE SURE THAT THERE IS A GOOD FLOW OF AIR THROUGH THE WORK AREA. DO NOT BREATHE THE FUMES. DO NOT SMOKE. DO NOT USE THESE MATERIALS NEAR A FLAME, SPARKS OR SOURCES OF HEAT. USE PROTECTIVE CLOTHING, GOGGLES AND GLOVES. IF YOU GET ONE OF THESE MATERIALS ON YOUR SKIN OR IN YOUR EYES, FLUSH IT AWAY WITH A FLOW OF CLEAN WATER. IF YOU GET ONE OF THESE MATERIALS IN YOUR MOUTH, GET IMMEDIATE MEDICAL AID. IN GENERAL, THESE MATERIALS ARE POISONOUS, FLAMMABLE AND SKIN IRRITANTS.**

WARNING: **KEEP ALL HYDROCARBONS (FUELS, LUBRICANTS, ETC.) AWAY FROM ALL SOURCES OF OXYGEN. OXYGEN BECOMES EXPLOSIVE WHEN IT TOUCHES HYDROCARBONS.**

WARNING: **TO PREVENT CONTAMINATION OF THE OXYGEN SYSTEM, MAKE SURE THAT YOUR HANDS AND ALL THE TOOLS ARE CLEAN.**

CAUTION: **PUT DRY, CLEAN, METAL OR PLASTIC PLUGS ON ALL PIPES OR UNITS REMOVED TEMPORARILY. PUT EACH PIPE OR UNIT IN A SEALED VINYL BAG. UNWANTED MATERIALS IN THE OXYGEN SYSTEM CAN DAMAGE THE SYSTEM.**

CAUTION: **DO ALL THE WORK ON A CLEAN, SOFT SURFACE TO PREVENT DAMAGE TO THE COMPONENTS.**

SUB TASK 25-41-51-010-120-A01
D2549030703200

1. Removal of the Side Wall (48M-1)

NOTE: **See TABLE 3787 for the references for the replacement procedures of permanent installed parts.**

IPL FIG. ITEM	COMPONENT PART NAME	IPL FIG. ITEM	REPLACEMENT PART NAME	SEE REPAIR TASK
48M-001 48M-270	Side Wall Post Assembly	48M-290	Nut	TBD

Table 3787
Reference list for the replacement of permanent installed parts

(a) Remove and disassemble the handle assemblies 48M-140 as follows:

1 Remove the security pins 48M-160 from the handle assemblies 48M-140.

2 Remove the handle assemblies 48M-140 from the aft side wall assembly 48M-010.

3 Remove the special screws 48M-150 and the special washers 48M-170 from the aft side wall assembly 48M-010.

(b) Remove the toilet seat cover dispenser 48M-330 from the screws 48M-340.

(c) Remove the screws 48M-340 from the aft side wall assembly 48M-010.

(d) Remove the studs 48M-260 and the washers 48M-250 from the cover oxygen container assy 48M-180.

(e) Remove the screws 48M-200, the nuts 48M-210 and the cover oxygen container assy 48M-180 from the angle 48M-190.

(f) Remove the screws 48M-240, the washers 48M-250 and the angle 48M-190 from the aft side wall assembly 48M-010.

(g) Remove the screws 48M-520, the washers 48M-530, the clamps 48M-540 and the hose 48M-510 from the aft side wall assembly 48M-010.

(h) Remove the hose 48M-510 from the oxygen container assy 48M-230.

(i) Remove the ground cable from the oxygen container assy 48M-230.

(j) Remove the screws 48M-240, the washers 48M-250 and the oxygen container assy 48M-230 from the angles 48M-220.

(k) Remove the screws 48M-240, the washers 48M-250 and the angles 48M-220 from the aft side wall assembly 48M-010.

(l) Remove the screws 48M-300, the washers 48M-250 and the angle 48M-350 from the aft side wall assembly 48M-010.

(m) Remove the screws 48M-360 and the single door emergency unlocking device assembly 48M-370 from the post assembly 48M-270.

(n) Disassemble the single door emergency unlocking device assembly 48M-370 as follows:

WARNING: **BE CAREFUL WHEN YOU USE MATERIAL NO. 08-007 SEALANT, HIGH TEMPERATURE. OBEY THE MATERIAL MANUFACTURER'S INSTRUCTIONS.**

1 Remove the bolt 48M-430 and the emergency unlocking device strike 48M-390 from the emergency unlocking device housing 48M-380.

NOTE: **If necessary use a hot air blower to heat up the Material No. 08-007 Sealant, High Temperature to remove the bolt 48M-430.**

WARNING: **BE CAREFUL WHEN YOU USE MATERIAL NO. 08-007 SEALANT, HIGH TEMPERATURE. OBEY THE MATERIAL MANUFACTURER'S INSTRUCTIONS.**

2 Remove the pin 48M-410, the snap catch 48M-420 and the emergency unlocking device pivot 48M-400 from the emergency unlocking device housing 48M-380.

NOTE: **If necessary use a hot air blower to heat up the Material No. 08-007 Sealant, High Temperature to remove the snap catch 48M-420 and the pin 48M-410.**

(o) Remove the caps 48M-310, the screws 48M-300, 48M-320, the washers 48M-250 and the post assembly 48M-270.

(p) Disassemble the post assembly 48M-270 as follows:

1 Remove the screws 48M-280.

(q) Remove the screws 48M-040, 48M-050 and the fittings 48M-020, 48M-030 from the aft side wall assembly 48M-010.

SUB TASK 25-41-51-010-120-B01
D2549020414600

2. Removal of the Side Wall (48M-1)

NOTE: **See TABLE 3788 for the references for the replacement procedures of permanent installed parts.**

IPL FIG. ITEM	COMPONENT PART NAME	IPL FIG. ITEM	REPLACEMENT PART NAME	SEE REPAIR TASK
48M-001 48M-270	Side Wall Post Assembly	48M-290	Nut	TBD

Table 3788
Reference list for the replacement of permanent installed parts

(a) Remove and disassemble the handle assemblies 48M-140 as follows:

1 Remove the security pins 48M-160 from the handle assemblies 48M-140.

2 Remove the handle assemblies 48M-140 from the aft side wall assembly 48M-010.

3 Remove the special screws 48M-150 and the special washers 48M-170 from the aft side wall assembly 48M-010.

(b) Remove the toilet seat cover dispenser 48M-330 from the screws 48M-340.

(c) Remove the screws 48M-340 from the aft side wall assembly 48M-010.

(d) Remove the screws 48M-500 and the lavatory picture frame kit 48M-490 from the aft side wall assembly 48M-010.

(e) Remove the studs 48M-260 and the washers 48M-250 from the cover oxygen container assy 48M-180.

(f) Remove the screws 48M-200, the nuts 48M-210 and the cover oxygen container assy 48M-180 from the angle 48M-190.

(g) Remove the screws 48M-240, the washers 48M-250 and the angle 48M-190 from the aft side wall assembly 48M-010.

(h) Remove the ground cable from the oxygen container assy 48M-230.

(i) Remove the screws 48M-240, the washers 48M-250 and the oxygen container assy 48M-230 from the angles 48M-220.

(j) Remove the screws 48M-240, the washers 48M-250 and the angles 48M-220 from the aft side wall assembly 48M-010.

(k) Remove the screws 48M-300, the washers 48M-250 and the angle 48M-350 from the aft side wall assembly 48M-010.

(l) Remove the screws 48M-360 and the single door emergency unlocking device assembly 48M-370 from the post assembly 48M-270.

(m) Disassemble the single door emergency unlocking device assembly 48M-370 as follows:

WARNING: BE CAREFUL WHEN YOU USE MATERIAL NO. 08-007 SEALANT, HIGH TEMPERATURE. OBEY THE MATERIAL MANUFACTURER'S INSTRUCTIONS.

1 Remove the bolt 48M-430 and the emergency unlocking device strike 48M-390 from the emergency unlocking device housing 48M-380.

NOTE: If necessary use a hot air blower to heat up the Material No. 08-007 Sealant, High Temperature to remove the bolt 48M-430.

WARNING: BE CAREFUL WHEN YOU USE MATERIAL NO. 08-007 SEALANT, HIGH TEMPERATURE. OBEY THE MATERIAL MANUFACTURER'S INSTRUCTIONS.

2 Remove the pin 48M-410, the snap catch 48M-420 and the emergency unlocking device pivot 48M-400 from the emergency unlocking device housing 48M-380.

NOTE: If necessary use a hot air blower to heat up the Material No. 08-007 Sealant, High Temperature to remove the snap catch 48M-420 and the pin 48M-410.

(n) Remove the caps 48M-310, the screws 48M-300, 48M-320, the washers 48M-250 and the post assembly 48M-270.

(o) Disassemble the post assembly 48M-270 as follows:

1 Remove the screws 48M-280.

(p) Remove the screws 48M-040, 48M-050 and the fittings 48M-020, 48M-030 from the aft side wall assembly 48M-010.

SUB TASK 25-41-51-010-120-C01
D2549030702000

3. Removal of the Side Wall (48M-1)

NOTE: **See TABLE 3789 for the references for the replacement procedures of permanent installed parts.**

IPL FIG. ITEM	COMPONENT PART NAME	IPL FIG. ITEM	REPLACEMENT PART NAME	SEE REPAIR TASK
48M-001 48M-270	Side Wall Post Assembly	48M-290	Nut	TBD

Table 3789
Reference list for the replacement of permanent installed parts

(a) Remove and disassemble the handle assemblies 48M-440 as follows:

1 Remove the setscrews 48M-480 from the handle 48M-450.

2 Remove the handle 48M-450 from the aft side wall assembly 48M-010.

3 Remove the screws 48M-460 and the washers 48M-470 from the aft side wall assembly 48M-010.

(b) Remove the toilet seat cover dispenser 48M-330 from the screws 48M-340.

(c) Remove the screws 48M-340 from the aft side wall assembly 48M-010.

(d) Remove the studs 48M-260 and the washers 48M-250 from the cover oxygen container assy 48M-180.

(e) Remove the screws 48M-200, the nuts 48M-210 and the cover oxygen container assy 48M-180 from the angle 48M-190.

(f) Remove the screws 48M-240, the washers 48M-250 and the angle 48M-190 from the aft side wall assembly 48M-010.

(g) Remove the ground cable from the oxygen container assy 48M-230.

(h) Remove the screws 48M-240, the washers 48M-250 and the oxygen container assy 48M-230 from the angles 48M-220.

(i) Remove the screws 48M-240, the washers 48M-250 and the angles 48M-220 from the aft side wall assembly 48M-010.

(j) Remove the screws 48M-300, the washers 48M-250 and the angle 48M-350 from the aft side wall assembly 48M-010.

(k) Remove the screws 48M-360 and the single door emergency unlocking device assembly 48M-370 from the post assembly 48M-270.

(l) Disassemble the single door emergency unlocking device assembly 48M-370 as follows:

WARNING: BE CAREFUL WHEN YOU USE MATERIAL NO. 08-007 SEALANT, HIGH TEMPERATURE. OBEY THE MATERIAL MANUFACTURER'S INSTRUCTIONS.

1 Remove the bolt 48M-430 and the emergency unlocking device strike 48M-390 from the emergency unlocking device housing 48M-380.

NOTE: If necessary use a hot air blower to heat up the Material No. 08-007 Sealant, High Temperature to remove the bolt 48M-430.

WARNING: BE CAREFUL WHEN YOU USE MATERIAL NO. 08-007 SEALANT, HIGH TEMPERATURE. OBEY THE MATERIAL MANUFACTURER'S INSTRUCTIONS.

2 Remove the pin 48M-410, the snap catch 48M-420 and the emergency unlocking device pivot 48M-400 from the emergency unlocking device housing 48M-380.

NOTE: If necessary use a hot air blower to heat up the Material No. 08-007 Sealant, High Temperature to remove the snap catch 48M-420 and the pin 48M-410.

(m) Remove the caps 48M-310, the screws 48M-300, 48M-320, the washers 48M-250 and the post assembly 48M-270.

(n) Disassemble the post assembly 48M-270 as follows:

1 Remove the screws 48M-280.

(o) Remove the screws 48M-040, 48M-050 and the fittings 48M-020, 48M-030 from the aft side wall assembly 48M-010.

SUB TASK 25-41-51-010-120-D01
D2549020412400 D2549020413200

4. Removal of the Side Wall (48M-1)

NOTE: **See TABLE 3790 for the references for the replacement procedures of permanent installed parts.**

IPL FIG. ITEM	COMPONENT PART NAME	IPL FIG. ITEM	REPLACEMENT PART NAME	SEE REPAIR TASK
48M-001 48M-270	Side Wall Post Assembly	48M-290	Nut	TBD

Table 3790
Reference list for the replacement of permanent installed parts

(a) Remove and disassemble the handle assemblies 48M-140 as follows:

1 Remove the security pins 48M-160 from the handle assemblies 48M-140.

2 Remove the handle assemblies 48M-140 from the aft side wall assembly 48M-010.

3 Remove the special screws 48M-150 and the special washers 48M-170 from the aft side wall assembly 48M-010.

(b) Remove the toilet seat cover dispenser 48M-330 from the screws 48M-340.

(c) Remove the screws 48M-340 from the aft side wall assembly 48M-010.

(d) Remove the studs 48M-260 and the washers 48M-250 from the cover oxygen container assy 48M-180.

(e) Remove the screws 48M-200, the nuts 48M-210 and the cover oxygen container assy 48M-180 from the angle 48M-190.

(f) Remove the screws 48M-240, the washers 48M-250 and the angle 48M-190 from the aft side wall assembly 48M-010.

(g) Remove the ground cable from the oxygen container assy 48M-230.

(h) Remove the screws 48M-240, the washers 48M-250 and the oxygen container assy 48M-230 from the angles 48M-220.

(i) Remove the screws 48M-240, the washers 48M-250 and the angles 48M-220 from the aft side wall assembly 48M-010.

(j) Remove the screws 48M-300, the washers 48M-250 and the angle 48M-350 from the aft side wall assembly 48M-010.

(k) Remove the screws 48M-360 and the single door emergency unlocking device assembly 48M-370 from the post assembly 48M-270.

(l) Disassemble the single door emergency unlocking device assembly 48M-370 as follows:

WARNING: BE CAREFUL WHEN YOU USE MATERIAL NO. 08-007 SEALANT, HIGH TEMPERATURE. OBEY THE MATERIAL MANUFACTURER'S INSTRUCTIONS.

1 Remove the bolt 48M-430 and the emergency unlocking device strike 48M-390 from the emergency unlocking device housing 48M-380.

NOTE: If necessary use a hot air blower to heat up the Material No. 08-007 Sealant, High Temperature to remove the bolt 48M-430.

WARNING: BE CAREFUL WHEN YOU USE MATERIAL NO. 08-007 SEALANT, HIGH TEMPERATURE. OBEY THE MATERIAL MANUFACTURER'S INSTRUCTIONS.

2 Remove the pin 48M-410, the snap catch 48M-420 and the emergency unlocking device pivot 48M-400 from the emergency unlocking device housing 48M-380.

NOTE: If necessary use a hot air blower to heat up the Material No. 08-007 Sealant, High Temperature to remove the snap catch 48M-420 and the pin 48M-410.

(m) Remove the caps 48M-310, the screws 48M-300, 48M-320, the washers 48M-250 and the post assembly 48M-270.

(n) Disassemble the post assembly 48M-270 as follows:

1 Remove the screws 48M-280.

(o) Remove the screws 48M-040, 48M-050 and the fittings 48M-020, 48M-030 from the aft side wall assembly 48M-010.

SUB TASK 25-41-51-010-120-E01
D2549020414200

5. Removal of the Side Wall (48M-1)

NOTE: **See TABLE 3791 for the references for the replacement procedures of permanent installed parts.**

IPL FIG. ITEM	COMPONENT PART NAME	IPL FIG. ITEM	REPLACEMENT PART NAME	SEE REPAIR TASK
48M-001 48M-270	Side Wall Post Assembly	48M-290	Nut	Replacement of the Riveted Parts

Table 3791
Reference list for the replacement of permanent installed parts

(a) Remove and disassemble the handle assemblies 48M-140 as follows:

1 Remove the security pins 48M-160 from the handle assemblies 48M-140.

2 Remove the handle assemblies 48M-140 from the aft side wall assembly 48M-010.

3 Remove the special screws 48M-150 and the special washers 48M-170 from the aft side wall assembly 48M-010.

(b) Remove the toilet seat cover dispenser 48M-330 from the screws 48M-340.

(c) Remove the screws 48M-340 from the aft side wall assembly 48M-010.

(d) Remove the studs 48M-260 and the washers 48M-250 from the cover oxygen container assy 48M-180.

(e) Remove the screws 48M-200, the nuts 48M-210 and the cover oxygen container assy 48M-180 from the angle 48M-190.

(f) Remove the screws 48M-240, the washers 48M-250 and the angle 48M-190 from the aft side wall assembly 48M-010.

(g) Remove the ground cable from the oxygen container assy 48M-230.

(h) Remove the screws 48M-240, the washers 48M-250 and the oxygen container assy 48M-230 from the angles 48M-220.

(i) Remove the screws 48M-240, the washers 48M-250 and the angles 48M-220 from the aft side wall assembly 48M-010.

(j) Remove the screws 48M-300, the washers 48M-250 and the angle 48M-350 from the aft side wall assembly 48M-010.

(k) Remove the screws 48M-360 and the single door emergency unlocking device assembly 48M-370 from the post assembly 48M-270.

(l) Disassemble the single door emergency unlocking device assembly 48M-370 as follows:

WARNING: BE CAREFUL WHEN YOU USE MATERIAL NO. 08-007 SEALANT, HIGH TEMPERATURE. OBEY THE MATERIAL MANUFACTURER'S INSTRUCTIONS.

1 Remove the bolt 48M-430 and the emergency unlocking device strike 48M-390 from the emergency unlocking device housing 48M-380.

NOTE: If necessary use a hot air blower to heat up the Material No. 08-007 Sealant, High Temperature to remove the bolt 48M-430.

WARNING: BE CAREFUL WHEN YOU USE MATERIAL NO. 08-007 SEALANT, HIGH TEMPERATURE. OBEY THE MATERIAL MANUFACTURER'S INSTRUCTIONS.

2 Remove the pin 48M-410, the snap catch 48M-420 and the emergency unlocking device pivot 48M-400 from the emergency unlocking device housing 48M-380.

NOTE: If necessary use a hot air blower to heat up the Material No. 08-007 Sealant, High Temperature to remove the snap catch 48M-420 and the pin 48M-410.

(m) Remove the caps 48M-310, the screws 48M-300, 48M-320, the washers 48M-250 and the post assembly 48M-270.

(n) Disassemble the post assembly 48M-270 as follows:

1 Remove the screws 48M-280.

(o) Remove the screws 48M-040, 48M-050 and the fittings 48M-020, 48M-030 from the aft side wall assembly 48M-010.

(p) If necessary, remove the kick strip 48M-550 from the aft side wall assembly 48M-010.

SUB TASK 25-41-51-010-120-F01
D2549020301600 D2549020413800

6. Removal of the Side Wall (48M-1)

NOTE: **See TABLE 3792 for the references for the replacement procedures of permanent installed parts.**

IPL FIG. ITEM	COMPONENT PART NAME	IPL FIG. ITEM	REPLACEMENT PART NAME	SEE REPAIR TASK
48M-001 48M-270	Side Wall Post Assembly	48M-290	Nut	TBD

Table 3792
Reference list for the replacement of permanent installed parts

(a) Remove and disassemble the handle assemblies 48M-140 as follows:

1 Remove the security pins 48M-160 from the handle assemblies 48M-140.

2 Remove the handle assemblies 48M-140 from the aft side wall assembly 48M-010.

3 Remove the special screws 48M-150 and the special washers 48M-170 from the aft side wall assembly 48M-010.

(b) Remove the toilet seat cover dispenser 48M-330 from the screws 48M-340.

(c) Remove the screws 48M-340 from the aft side wall assembly 48M-010.

(d) Remove the studs 48M-260 and the washers 48M-250 from the cover oxygen container assy 48M-180.

(e) Remove the screws 48M-200, the nuts 48M-210 and the cover oxygen container assy 48M-180 from the angle 48M-190.

(f) Remove the screws 48M-240, the washers 48M-250 and the angle 48M-190 from the aft side wall assembly 48M-010.

(g) Remove the ground cable from the oxygen container assy 48M-230.

(h) Remove the screws 48M-240, the washers 48M-250 and the oxygen container assy 48M-230 from the angles 48M-220.

(i) Remove the screws 48M-240, the washers 48M-250 and the angles 48M-220 from the aft side wall assembly 48M-010.

(j) Remove the screws 48M-300, the washers 48M-250 and the angle 48M-350 from the aft side wall assembly 48M-010.

(k) Remove the screws 48M-360 and the single door emergency unlocking device assembly 48M-370 from the post assembly 48M-270.

(l) Disassemble the single door emergency unlocking device assembly 48M-370 as follows:

WARNING: BE CAREFUL WHEN YOU USE MATERIAL NO. 08-007 SEALANT, HIGH TEMPERATURE. OBEY THE MATERIAL MANUFACTURER'S INSTRUCTIONS.

1 Remove the bolt 48M-430 and the emergency unlocking device strike 48M-390 from the emergency unlocking device housing 48M-380.

NOTE: If necessary use a hot air blower to heat up the Material No. 08-007 Sealant, High Temperature to remove the bolt 48M-430.

WARNING: BE CAREFUL WHEN YOU USE MATERIAL NO. 08-007 SEALANT, HIGH TEMPERATURE. OBEY THE MATERIAL MANUFACTURER'S INSTRUCTIONS.

2 Remove the pin 48M-410, the snap catch 48M-420 and the emergency unlocking device pivot 48M-400 from the emergency unlocking device housing 48M-380.

NOTE: If necessary use a hot air blower to heat up the Material No. 08-007 Sealant, High Temperature to remove the snap catch 48M-420 and the pin 48M-410.

(m) Remove the caps 48M-310, the screws 48M-300, 48M-320, the washers 48M-250 and the post assembly 48M-270.

(n) Disassemble the post assembly 48M-270 as follows:

1 Remove the screws 48M-280.

(o) Remove the screws 48M-040, 48M-050 and the fittings 48M-020, 48M-030 from the aft side wall assembly 48M-010.

SUB TASK 25-41-51-010-120-G01
D2549020414000 D2549020414800

7. Removal of the Side Wall (48M-1)

NOTE: **See TABLE 3793 for the references for the replacement procedures of permanent installed parts.**

IPL FIG. ITEM	COMPONENT PART NAME	IPL FIG. ITEM	REPLACEMENT PART NAME	SEE REPAIR TASK
48M-001 48M-270	Side Wall Post Assembly	48M-290	Nut	TBD

Table 3793
Reference list for the replacement of permanent installed parts

(a) Remove and disassemble the handle assemblies 48M-140 as follows:

1 Remove the security pins 48M-160 from the handle assemblies 48M-140.

2 Remove the handle assemblies 48M-140 from the aft side wall assembly 48M-010.

3 Remove the special screws 48M-150 and the special washers 48M-170 from the aft side wall assembly 48M-010.

(b) Remove the studs 48M-260 and the washers 48M-250 from the cover oxygen container assy 48M-180.

(c) Remove the screws 48M-200, the nuts 48M-210 and the cover oxygen container assy 48M-180 from the angle 48M-190.

(d) Remove the screws 48M-240, the washers 48M-250 and the angle 48M-190 from the aft side wall assembly 48M-010.

(e) Remove the ground cable from the oxygen container assy 48M-230.

(f) Remove the screws 48M-240, the washers 48M-250 and the oxygen container assy 48M-230 from the angles 48M-220.

(g) Remove the screws 48M-240, the washers 48M-250 and the angles 48M-220 from the aft side wall assembly 48M-010.

(h) Remove the screws 48M-300, the washers 48M-250 and the angle 48M-350 from the aft side wall assembly 48M-010.

(i) Remove the screws 48M-360 and the single door emergency unlocking device assembly 48M-370 from the post assembly 48M-270.

(j) Disassemble the single door emergency unlocking device assembly 48M-370 as follows:

WARNING: BE CAREFUL WHEN YOU USE MATERIAL NO. 08-007 SEALANT, HIGH TEMPERATURE. OBEY THE MATERIAL MANUFACTURER'S INSTRUCTIONS.

1 Remove the bolt 48M-430 and the emergency unlocking device strike 48M-390 from the emergency unlocking device housing 48M-380.

NOTE: If necessary use a hot air blower to heat up the Material No. 08-007 Sealant, High Temperature to remove the bolt 48M-430.

WARNING: BE CAREFUL WHEN YOU USE MATERIAL NO. 08-007 SEALANT, HIGH TEMPERATURE. OBEY THE MATERIAL MANUFACTURER'S INSTRUCTIONS.

2 Remove the pin 48M-410, the snap catch 48M-420 and the emergency unlocking device pivot 48M-400 from the emergency unlocking device housing 48M-380.

NOTE: If necessary use a hot air blower to heat up the Material No. 08-007 Sealant, High Temperature to remove the snap catch 48M-420 and the pin 48M-410.

(k) Remove the caps 48M-310, the screws 48M-300, 48M-320, the washers 48M-250 and the post assembly 48M-270.

(l) Disassemble the post assembly 48M-270 as follows:

1 Remove the screws 48M-280.

(m) Remove the screws 48M-040, 48M-050 and the fittings 48M-020, 48M-030 from the aft side wall assembly 48M-010.

SUB TASK 25-41-51-010-120-H01
D2549020413600 D2549030702200 R225401136-008 R225401136-014

8. Removal of the Side Wall (48M-1)

NOTE: **See TABLE 3794 for the references for the replacement procedures of permanent installed parts.**

IPL FIG. ITEM	COMPONENT PART NAME	IPL FIG. ITEM	REPLACEMENT PART NAME	SEE REPAIR TASK
48M-001 48M-270	Side Wall Post Assembly	48M-290	Nut	TBD

Table 3794
Reference list for the replacement of permanent installed parts

(a) Remove and disassemble the handle assemblies 48M-140 as follows:

1 Remove the security pins 48M-160 from the handle assemblies 48M-140.

2 Remove the handle assemblies 48M-140 from the aft side wall assembly 48M-010.

3 Remove the special screws 48M-150 and the special washers 48M-170 from the aft side wall assembly 48M-010.

(b) Remove the studs 48M-260 and the washers 48M-250 from the cover oxygen container assy 48M-180.

(c) Remove the screws 48M-200, the nuts 48M-210 and the cover oxygen container assy 48M-180 from the angle 48M-190.

(d) Remove the screws 48M-240, the washers 48M-250 and the angle 48M-190 from the aft side wall assembly 48M-010.

(e) Remove the ground cable from the oxygen container assy 48M-230.

(f) Remove the screws 48M-240, 48M-245, the washers 48M-250 and the oxygen container assy 48M-230 from the angles 48M-220.

(g) Remove the screws 48M-240, the washers 48M-250 and the angles 48M-220 from the aft side wall assembly 48M-010.

(h) Remove the screws 48M-300, the washers 48M-250 and the angle 48M-350 from the aft side wall assembly 48M-010.

(i) Remove the screws 48M-360 and the single door emergency unlocking device assembly 48M-370 from the post assembly 48M-270.

(j) Disassemble the single door emergency unlocking device assembly 48M-370 as follows:

WARNING: BE CAREFUL WHEN YOU USE MATERIAL NO. 08-007 SEALANT, HIGH TEMPERATURE. OBEY THE MATERIAL MANUFACTURER'S INSTRUCTIONS.

1 Remove the bolt 48M-430 and the emergency unlocking device strike 48M-390 from the emergency unlocking device housing 48M-380.

NOTE: If necessary use a hot air blower to heat up the Material No. 08-007 Sealant, High Temperature to remove the bolt 48M-430.

WARNING: BE CAREFUL WHEN YOU USE MATERIAL NO. 08-007 SEALANT, HIGH TEMPERATURE. OBEY THE MATERIAL MANUFACTURER'S INSTRUCTIONS.

2 Remove the pin 48M-410, the snap catch 48M-420 and the emergency unlocking device pivot 48M-400 from the emergency unlocking device housing 48M-380.

NOTE: If necessary use a hot air blower to heat up the Material No. 08-007 Sealant, High Temperature to remove the snap catch 48M-420 and the pin 48M-410.

(k) Remove the caps 48M-310, the screws 48M-300, 48M-320, the washers 48M-250 and the post assembly 48M-270.

(l) Disassemble the post assembly 48M-270 as follows:

1 Remove the screws 48M-280.

(m) Remove the screws 48M-040, 48M-050 and the fittings 48M-020, 48M-030 from the aft side wall assembly 48M-010.

TASK 25-41-51-000-825-Q01

D2549010500000 D2549010500400 D2549010500600 D2549010500800 D2549010501200
D2549010501400 D2549010501600 D2549010501800 D2549010502000 D2549010502200
D2549010502400 D2549010502600 D2549010502800 D2549010503200 D2549010503400
D2549010503600 D2549010503800 D2549010504600 D2549010505000 D2549010505200
D2549010505400 D2549010505600 D2549010505800 D2549010506000 D2549010506200
D2549010506400 D2549010506800 D2549010507000 D2549010507200 D2549010507600
D2549010507800 D2549010508000 D2549010508200 D2549010508400 D2549010508600
D2549010508800 D2549010509200 D2549010509400 D2549010509600 D2549010509800
D2549010510000 D2549010510200 D2549010510400 D2549010510600 D2549010510800
D2549010511000 D2549010511400 D2549010511600 D2549010511800 D2549010512000
D2549010512200 D2549010512400 D2549010513000 D2549010513400 D2549010513600
D2549010513800 D2549010514000 D2549010514400 D2549010514600 D2549010514800
D2549010600000 D2549010600200 D2549010600400 D2549010600600 D2549010600800
D2549010601200 D2549010601400 D2549010601600 D2549010602000 D2549010602200
D2549010602400 D2549010602600 D2549010602800 D2549010603000 D2549010603200
D2549010603400 D2549010603600 D2549010603800 D2549010604200 D2549010604400
D2549010604600 D2549010604800 D2549010605000 D2549010605200 D2549010605600
D2549010605800 D2549010606000 D2549010606200 D2549010606400 D2549010606600
D2549010606800 D2549010607000 D2549010607200 D2549010607400 D2549010607600
D2549010607800 D2549010608200 D2549010608400 D2549010608600 D2549010608800
D2549010609000 D2549010609200 D2549010609400 D2549010609600 D2549010609800
D2549010610000 D2549010610200 D2549010610400 D2549010611600 D2549010611800
D2549010612000 D2549010614400 D2549020404800 D2549020405000 D2549020500000
D2549020500400 D2549020500600 D2549020500800 D2549020501000 D2549020501200
D2549020501400 D2549020501800 D2549020502000 D2549020502200 D2549020502400
D2549020502600 D2549020502800 D2549020503000 D2549020503200 D2549020503600
D2549020503800 D2549020504000 D2549020504200 D2549020504400 D2549020504600
D2549020504800 D2549020505000 D2549020505200 D2549020505600 D2549020506000
D2549020506200 D2549020506400 D2549020506600 D2549020506800 D2549020507000
D2549020507200 D2549020507400 D2549020507600 D2549020507800 D2549020508000
D2549020508200 D2549020508400 D2549020508600 D2549020508800 D2549020509000
D2549020509200 D2549020509600 D2549020509800 D2549020510000 D2549020510400
D2549020510600 D2549020510800 D2549020511000 D2549020511200 D2549020511600
D2549020511800 D2549020512000 D2549020512200 D2549020512400 D2549020512600
D2549020512800 D2549020513000 D2549020513400 D2549020513600 D2549020514000
D2549020514200 D2549020514400 D2549020514600 D2549020514800 D2549020600000
D2549020600200 D2549020600400 D2549020600800 D2549020601000 D2549020601400
D2549020601800 D2549020602000 D2549020602200 D2549020602400 D2549020602600
D2549020602800 D2549020603000 D2549020603400 D2549020603600 D2549020603800
D2549020604000 D2549020604200 D2549020604400 D2549020604600 D2549020604800
D2549020605000 D2549020605200 D2549020605400 D2549020605600 D2549020605800
D2549020606000 D2549020606400 D2549020606600 D2549020606800 D2549020607000
D2549020607200 D2549020607400 D2549020607600 D2549020607800 D2549020608200
D2549020608400 D2549020608600 D2549020609000 D2549020609200 D2549020609400
D2549020609600 D2549020609800 D2549020610000 D2549020610200 D2549020610400
D2549020610600 D2549020610800 D2549020611000 D2549020611200 D2549020611400

D2549020611600 D2549020611800 D2549020612000 D2549020612200 D2549020612400
D2549020612600 D2549020612800 D2549020613000 D2549020613200 D2549020613600
D2549020613800 D2549020614000 D2549020614400 D2549020614600 D2549020614800
D2549020700000 D2549020700200 D2549020700400 D2549020700600 D2549020700800
D2549020701000 D2549020701200 D2549020701400 D2549020701600 D2549020701800
D2549020702000 D2549020702200 D2549020702400 D2549020702600 D2549020702800
D2549020703200 D2549020703400 D2549020703600 D2549020703800 D2549020704000
D2549020704200 D2549020704400 D2549020704600 D2549020704800 D2549020705000
D2549020705200 D2549020705400 D2549020705600 D2549020705800 D2549020706000
D2549020706200 D2549020706600 D2549020706800 D2549020707000 D2549020707200
D2549020707400 D2549020707600 D2549020707800 D2549020708000 D2549020708200
D2549020708400 D2549020708600 D2549020708800 D2549020709000 D2549020709200
D2549020709400 D2549020709600 D2549020709800 D2549020710000 D2549020710200
D2549020710400 D2549020710600 D2549020710800 D2549020711000 D2549020711200
D2549020711400 D2549020711600 D2549020712000 D2549020712200 D2549020712400
D2549020712600 D2549020712800 D2549020713200 D2549020713400 D2549020713600
D2549020713800 D2549020714400 D2549020714600 D2549020800200 D2549020800400
D2549020800600 D2549020800800 D2549020801000 D2549020801200 D2549020801600
D2549020802000 D2549020802200 D2549020802800 D2549020803000 D2549020803200
D2549020803400 D2549020803600 D2549020803800 D2549020805000 D2549020805400
D2549020807400 D2549020808200 D2549020809400 D2549020809800 D2549020814200
D2549030400000 D2549030400200 D2549030400400 D2549030401200 D2549030402000
D2549030402200 D2549030402600 D2549030402800 D2549030403400 D2549030403800
D2549030404000 D2549030404600 D2549030405200 D2549030405400 D2549030407200
D2549030500400 D2549030500600 D2549030500800 D2549030501000 D2549030501200
D2549030501400 D2549030501800 D2549030502000 D2549030502400 D2549030502600
D2549030502800 D2549030503000 D2549030503400 D2549030503600 D2549030503800
D2549030504000 D2549030504200 D2549030504600 D2549030504800 D2549030505200
D2549030505400 D2549030505600 D2549030505800 D2549030506000 D2549030506200
D2549030506400 D2549030506600 D2549030506800 D2549030507000 D2549030507200
D2549030507400 D2549030507600 D2549030507800 D2549030508000 D2549030508200
D2549030508400 D2549030508600 D2549030508800 D2549030509200 D2549030509400
D2549030509600 D2549030509800 D2549030510000 D2549030510200 D2549030510400
D2549030510600 D2549030510800 D2549030511000 D2549030511200 D2549030511400
D2549030511600 D2549030511800 D2549030512000 D2549030512200 D2549030512400
D2549030512800 D2549030513000 D2549030513200 D2549030513400 D2549030513600
D2549030513800 D2549030514000 D2549030514200 D2549030514400 D2549030514600
D2549030514800 D2549030600000 D2549030600200 D2549030600400 D2549030600600
D2549030600800 D2549030601000 D2549030601200 D2549030601400 D2549030601600
D2549030601800 D2549030602000 D2549030602200 D2549030602400 D2549030602600
D2549030602800 D2549030603000 D2549030603200 D2549030603400 D2549030603600
D2549030603800 D2549030604200 D2549030604400 D2549030604600 D2549030604800
D2549030605000 D2549030605200 D2549030605400 D2549030605600 D2549030605800
D2549030606200 D2549030606400 D2549030606600 D2549030606800 D2549030607000
D2549030607200 D2549030607400 D2549030607600 D2549030607800 D2549030608000
D2549030608200 D2549030608600 D2549030608800 D2549030609000 D2549030609200
D2549030609800 D2549030610000 D2549030610200 D2549030610400 D2549030610600

D2549030611000 D2549030611200 D2549030611400 D2549030611600 D2549030611800 D2549030612000 D2549030612200 D2549030612400 D2549030612600 D2549030612800 D2549030613200 D2549030613400 D2549030613600 D2549030613800 D2549030614200 D2549030614400 D2549030614600 D2549030614800 D2549030701200 R225401107-004 R225401115-000 R225401115-002 R225401128-000 R225401134-000 R225401134-002 R225401134-004 R225401134-006 R225401134-008 R225401134-010 R225401134-012 R225401134-016 R225401134-018 R225401134-020 R225401134-022 R225401134-024 R225401134-026 R225401134-028 R225401134-030 R225401134-032 R225401134-034 R225401134-036 R225401136-000 R225401136-010 R225401136-016 R225401136-020 R225401136-022 R225401137-000 R225401137-002 R225401137-004 R225401137-006 R225401137-008 R225401137-010 R225401137-012 R225401137-014 R225401137-016 R225401139-000 R225401142-000 R225401142-002 R225401145-000 R225401145-002 R225401145-004 R225401145-006 R225401145-008 R225401145-012 R225401145-014 R225401146-000 R225401146-002 R225401152-000 R225401152-002 R225401152-004 R225401152-006 R225401153-000 R225401159-000 R225401160-000 R225401160-002 R225401168-000 R225401168-002 R225401168-004 R225401168-006 R225401168-008 R225401168-010 R225401168-012 R225401168-014 R225401168-016 R225401168-018 R225401168-020 R225401168-022 R225401168-024 R225401168-026 R225401168-028 R225401172-000 R225401172-002 R225401172-004 R225401172-006 R225401172-008 R225401172-010 R225401172-012 R225401172-014 R225401172-016 R225401172-018 R225401175-000 R225401175-002 R225401176-000 R225401183-000 R225401183-002 R225401183-008 R225401188-000 R225401188-002 R225401188-004 R225401188-006 R225401192-000 R225401195-000 R225401196-000 R225401196-002 R225401196-004 R225401196-006 R225401196-034 R225401196-036 R225401196-038 R225401196-046 R225401196-048 R225401196-050 R225401196-052 R225401199-004 R225401199-006 R225401600-000 R225401600-002 R225401600-004 R225401603-000 R225401605-000 R225401605-002 R225401611-010 R225401613-000 R225401614-000 R225401618-000 R225401618-002 R225401619-000 R225401619-002 R225401625-000 R225401629-000 R225401629-002 R225401693-000

251. Removal of the Side Wall

A. General

A complete disassembly of the component is not necessary and not recommended.

Do not disassemble the component more than it is necessary for:

- Cleaning
- Visual Inspection
- Replacement of defective parts.

B. Job Set-up Information
(1) Consumable Materials

REFERENCE	**DESIGNATION**
	FASTBOND 10 - Formica Bonding Rigid Vinyl
08-007	Sealant, High Temperature

Table 3795
Consumable Materials

(2) Fixtures, Tools, Test and Support Equipment

REFERENCE	DESIGNATION
	hot air blower

Table 3796
Fixtures, Tools, Test and Support Equipment

C. Procedure

WARNING: **BE CAREFUL WHEN YOU USE SOLVENTS/CLEANING AGENTS, SEALANTS AND OTHER MATERIALS. OBEY THE MATERIAL MANUFACTURER'S INSTRUCTIONS AND THE LOCAL REGULATIONS. MAKE SURE THAT THERE IS A GOOD FLOW OF AIR THROUGH THE WORK AREA. DO NOT BREATHE THE FUMES. DO NOT SMOKE. DO NOT USE THESE MATERIALS NEAR A FLAME, SPARKS OR SOURCES OF HEAT. USE PROTECTIVE CLOTHING, GOGGLES AND GLOVES. IF YOU GET ONE OF THESE MATERIALS ON YOUR SKIN OR IN YOUR EYES, FLUSH IT AWAY WITH A FLOW OF CLEAN WATER. IF YOU GET ONE OF THESE MATERIALS IN YOUR MOUTH, GET IMMEDIATE MEDICAL AID. IN GENERAL, THESE MATERIALS ARE POISONOUS, FLAMMABLE AND SKIN IRRITANTS.**

WARNING: **KEEP ALL HYDROCARBONS (FUELS, LUBRICANTS, ETC.) AWAY FROM ALL SOURCES OF OXYGEN. OXYGEN BECOMES EXPLOSIVE WHEN IT TOUCHES HYDROCARBONS.**

WARNING: **TO PREVENT CONTAMINATION OF THE OXYGEN SYSTEM, MAKE SURE THAT YOUR HANDS AND ALL THE TOOLS ARE CLEAN.**

CAUTION: **PUT DRY, CLEAN, METAL OR PLASTIC PLUGS ON ALL PIPES OR UNITS REMOVED TEMPORARILY. PUT EACH PIPE OR UNIT IN A SEALED VINYL BAG. UNWANTED MATERIALS IN THE OXYGEN SYSTEM CAN DAMAGE THE SYSTEM.**

CAUTION: **DO ALL THE WORK ON A CLEAN, SOFT SURFACE TO PREVENT DAMAGE TO THE COMPONENTS.**

SUB TASK 25-41-51-010-121-A01
D2549030610200

1. Removal of the Side Wall (48N-1)

NOTE: **See TABLE 3797 for the references for the replacement procedures of permanent installed parts.**

More data for bonded parts are given in column SEE REPAIR TASK/SPM REFERENCE. Use the data for the selection of the related repair solution.

IPL FIG. ITEM	COMPONENT PART NAME	IPL FIG. ITEM	REPLACEMENT PART NAME	SEE REPAIR TASK/ SPM REFERENCE
48N-001 48N-270	Side Wall Post Assembly	48N-290	Nut	Replacement of the Riveted Parts
48N-001 48N-270	Side Wall Post Assembly	48N-295	Scuff Plate	Replacement of the Bonded Parts Material No. 08-553 FASTBOND 10 - Formica Bonding Rigid Vinyl
48N-001 48N-370	Side Wall Mirror Assembly	48N-380 48N-390 48N-430	Mirror Mirror Panel Adhesive Film	SPM 25-00-01

Table 3797
Reference list for the replacement of permanent installed parts

(a) Remove the stud 48N-440 from the aft side wall assembly 48N-010.

(b) Remove the mirror assembly 48N-370 from the screws 48N-340.

(c) Remove the screws 48N-340 from the aft side wall assembly 48N-010.

(d) Remove the screws 48N-400 and the washers 48N-410 from the mirror assembly 48N-370.

(e) Remove the screws 48N-200 and the section 48N-360 from the aft side wall assembly 48N-010.

(f) Remove and disassemble the handle assemblies 48N-140 as follows:

1 Remove the security pins 48N-160 from the handle assemblies 48N-140.

2 Remove the handle assemblies 48N-140 from the aft side wall assembly 48N-010.

3 Remove the special screws 48N-150 and the special washers 48N-170 from the aft side wall assembly 48N-010.

(g) Remove the toilet seat cover dispenser 48N-330 from the screws 48N-340.

(h) Remove the screws 48N-340 from the aft side wall assembly 48N-010.

(i) Remove the studs 48N-260 from the oxygen container assy 48N-180.

(j) Remove the screws 48N-200, the nuts 48N-210 and the cover oxygen container assy 48N-180 from the angle 48N-190.

(k) Remove the screws 48N-240, the washers 48N-250 and the angle 48N-190 from the aft side wall assembly 48N-010.

(l) Remove the ground cable from the oxygen container assy 48N-230.

(m) Remove the screws 48N-240, the washers 48N-250 and the oxygen container assy 48N-230 from the angles 48N-220.

(n) Remove the screws 48N-240, the washers 48N-250 and the angles 48N-220 from the aft side wall assembly 48N-010.

(o) Remove the screws 48N-300, the washers 48N-250 and the angle 48N-350 from the aft side wall assembly 48N-010.

(p) Remove the caps 48N-310, the screws 48N-300, 48N-320, the washers 48N-250 and the post assembly 48N-270.

(q) Disassemble the post assembly 48N-270 as follows:

1 Remove the screws 48N-280 and the plates 48N-285.

(r) Remove the screws 48N-040, 48N-050 and the fittings 48N-020, 48N-030 from the aft side wall assembly 48N-010.

SUB TASK 25-41-51-010-121-B01
D2549030701200

2. Removal of the Side Wall (48N-1)

NOTE: **See TABLE 3798 for the references for the replacement procedures of permanent installed parts.**

More data for bonded parts are given in column SEE REPAIR TASK/SPM REFERENCE. Use the data for the selection of the related repair solution.

IPL FIG. ITEM	COMPONENT PART NAME	IPL FIG. ITEM	REPLACEMENT PART NAME	SEE REPAIR TASK/ SPM REFERENCE
48N-001 48N-270	Side Wall Post Assembly	48N-290	Nut	Replacement of the Riveted Parts
48N-001 48N-270	Side Wall Post Assembly	48N-295	Scuff Plate	Replacement of the Bonded Parts Material No. 08-553 FASTBOND 10 - Formica Bonding Rigid Vinyl
48N-001 48N-370	Side Wall Mirror Assembly	48N-380 48N-390 48N-430	Mirror Mirror Panel Adhesive Film	SPM 25-00-01

Table 3798
Reference list for the replacement of permanent installed parts

(a) Remove the stud 48N-440 from the aft side wall assembly 48N-010.

(b) Remove the mirror assembly 48N-370 from the screws 48N-340.

(c) Remove the screws 48N-340 from the aft side wall assembly 48N-010.

(d) Remove the screws 48N-400 and the washers 48N-410 from the mirror assembly 48N-370.

(e) Remove the screws 48N-200 and the section 48N-360 from the aft side wall assembly 48N-010.

(f) Remove and disassemble the handle assemblies 48N-140 as follows:

1 Remove the security pins 48N-160 from the handle assemblies 48N-140.

2 Remove the handle assemblies 48N-140 from the aft side wall assembly 48N-010.

3 Remove the special screws 48N-150 and the special washers 48N-170 from the aft side wall assembly 48N-010.

(g) Remove the toilet seat cover dispenser 48N-330 from the screws 48N-340.

(h) Remove the screws 48N-340 from the aft side wall assembly 48N-010.

(i) Remove the studs 48N-260 from the oxygen container assy 48N-180.

(j) Remove the screws 48N-200, the nuts 48N-210 and the cover oxygen container assy 48N-180 from the angle 48N-190.

(k) Remove the screws 48N-240, the washers 48N-250 and the angle 48N-190 from the aft side wall assembly 48N-010.

(l) Remove the ground cable from the oxygen container assy 48N-230.

(m) Remove the screws 48N-240, the washers 48N-250 and the oxygen container assy 48N-230 from the angles 48N-220.

(n) Remove the screws 48N-240, the washers 48N-250 and the angles 48N-220 from the aft side wall assembly 48N-010.

(o) Remove the screws 48N-300, the washers 48N-250 and the angle 48N-350 from the aft side wall assembly 48N-010.

(p) Remove the screws 48N-520 and the single door emergency unlocking device assembly 48N-450 from the post assembly 48N-270.

(q) Disassemble the single door emergency unlocking device assembly 48N-450 as follows:

WARNING: **BE CAREFUL WHEN YOU USE MATERIAL NO. 08-007 SEALANT, HIGH TEMPERATURE. OBEY THE MATERIAL MANUFACTURER'S INSTRUCTIONS.**

1 Remove the bolt 48N-510 and the emergency unlocking device strike 48N-470 from the emergency unlocking device housing 48N-460.

NOTE: **If necessary use a hot air blower to heat up the Material No. 08-007 Sealant, High Temperature to remove the bolt 48N-510.**

WARNING: **BE CAREFUL WHEN YOU USE MATERIAL NO. 08-007 SEALANT, HIGH TEMPERATURE. OBEY THE MATERIAL MANUFACTURER'S INSTRUCTIONS.**

2 Remove the pin 48N-490, the snap catch 48N-500 and the emergency unlocking device pivot 48N-480 from the emergency unlocking device housing 48N-460.

NOTE: **If necessary use a hot air blower to heat up the Material No. 08-007 Sealant, High Temperature to remove the snap catch 48N-500 and the pin 48N-490.**

(r) Remove the caps 48N-310, the screws 48N-300, 48N-320, the washers 48N-250 and the post assembly 48N-270.

(s) Disassemble the post assembly 48N-270 as follows:

1 Remove the screws 48N-280 and the plates 48N-285.

(t) Remove the screws 48N-040, 48N-050 and the fittings 48N-020, 48N-030 from the aft side wall assembly 48N-010.

SUB TASK 25-41-51-010-121-C01

D2549010500000 D2549010500400 D2549010500600 D2549010500800
D2549010501200 D2549010501400 D2549010501600 D2549010501800
D2549010502000 D2549010502200 D2549010502400 D2549010502600
D2549010502800 D2549010503200 D2549010503400 D2549010503600
D2549010503800 D2549010504600 D2549010505000 D2549010505200
D2549010505400 D2549010505600 D2549010505800 D2549010506000
D2549010506200 D2549010506400 D2549010506800 D2549010507000
D2549010507200 D2549010507600 D2549010507800 D2549010508000
D2549010508200 D2549010508400 D2549010508600 D2549010508800
D2549010509200 D2549010509400 D2549010509600 D2549010509800
D2549010510000 D2549010510200 D2549010510400 D2549010510600
D2549010510800 D2549010511000 D2549010511400 D2549010511600
D2549010511800 D2549010512000 D2549010512200 D2549010512400

D2549010513000 D2549010513400 D2549010513600 D2549010513800
D2549010514000 D2549010514400 D2549010514600 D2549010514800
D2549010600000 D2549010600200 D2549010600400 D2549010600600
D2549010600800 D2549010601200 D2549010601400 D2549010601600
D2549010602000 D2549010602200 D2549010602400 D2549010602600
D2549010602800 D2549010603000 D2549010603200 D2549010603400
D2549010603600 D2549010603800 D2549010604200 D2549010604400
D2549010604600 D2549010604800 D2549010605000 D2549010605200
D2549010605600 D2549010605800 D2549010606000 D2549010606200
D2549010606400 D2549010606600 D2549010606800 D2549010607000
D2549010607200 D2549010607400 D2549010607600 D2549010607800
D2549010608200 D2549010608400 D2549010608600 D2549010608800
D2549010609000 D2549010609200 D2549010609400 D2549010609600
D2549010609800 D2549010610000 D2549010610200 D2549010610400
D2549010611600 D2549010611800 D2549010612000 D2549010614400
D2549020404800 D2549020405000 D2549020500000 D2549020500400
D2549020500600 D2549020500800 D2549020501000 D2549020501200
D2549020501400 D2549020501800 D2549020502000 D2549020502200
D2549020502400 D2549020502600 D2549020502800 D2549020503000
D2549020503200 D2549020503600 D2549020503800 D2549020504000
D2549020504200 D2549020504400 D2549020504600 D2549020504800
D2549020505000 D2549020505200 D2549020505600 D2549020506000
D2549020506200 D2549020506400 D2549020506600 D2549020506800
D2549020507000 D2549020507200 D2549020507400 D2549020507600
D2549020507800 D2549020508000 D2549020508200 D2549020508400
D2549020508600 D2549020508800 D2549020509000 D2549020509200
D2549020509600 D2549020509800 D2549020510000 D2549020510400
D2549020510600 D2549020510800 D2549020511000 D2549020511200
D2549020511600 D2549020511800 D2549020512000 D2549020512200
D2549020512400 D2549020512600 D2549020512800 D2549020513000
D2549020513400 D2549020513600 D2549020514000 D2549020514200
D2549020514400 D2549020514600 D2549020514800 D2549020600000
D2549020600200 D2549020600400 D2549020600800 D2549020601000
D2549020601400 D2549020601800 D2549020602000 D2549020602200
D2549020602400 D2549020602600 D2549020602800 D2549020603000
D2549020603400 D2549020603600 D2549020603800 D2549020604000
D2549020604200 D2549020604400 D2549020604600 D2549020604800
D2549020605000 D2549020605200 D2549020605400 D2549020605600
D2549020605800 D2549020606000 D2549020606400 D2549020606600
D2549020606800 D2549020607000 D2549020607200 D2549020607400
D2549020607600 D2549020607800 D2549020608200 D2549020608400
D2549020608600 D2549020609000 D2549020609200 D2549020609400
D2549020609600 D2549020609800 D2549020610000 D2549020610200
D2549020610400 D2549020610600 D2549020610800 D2549020611000
D2549020611200 D2549020611400 D2549020611600 D2549020611800
D2549020612000 D2549020612200 D2549020612400 D2549020612600
D2549020612800 D2549020613000 D2549020613200 D2549020613600

D2549020613800 D2549020614000 D2549020614400 D2549020614600
D2549020614800 D2549020700000 D2549020700200 D2549020700400
D2549020700600 D2549020700800 D2549020701000 D2549020701200
D2549020701400 D2549020701600 D2549020701800 D2549020702000
D2549020702200 D2549020702400 D2549020702600 D2549020702800
D2549020703200 D2549020703400 D2549020703600 D2549020703800
D2549020704000 D2549020704200 D2549020704400 D2549020704600
D2549020704800 D2549020705000 D2549020705200 D2549020705400
D2549020705600 D2549020705800 D2549020706000 D2549020706200
D2549020706600 D2549020706800 D2549020707000 D2549020707200
D2549020707400 D2549020707600 D2549020707800 D2549020708000
D2549020708200 D2549020708400 D2549020708600 D2549020708800
D2549020709000 D2549020709200 D2549020709400 D2549020709600
D2549020709800 D2549020710000 D2549020710200 D2549020710400
D2549020710600 D2549020710800 D2549020711000 D2549020711200
D2549020711400 D2549020711600 D2549020712000 D2549020712200
D2549020712400 D2549020712600 D2549020712800 D2549020713200
D2549020713400 D2549020713600 D2549020713800 D2549020714400
D2549020714600 D2549020800200 D2549020800400 D2549020800600
D2549020800800 D2549020801000 D2549020801200 D2549020801600
D2549020802000 D2549020802200 D2549020802800 D2549020803000
D2549020803200 D2549020803400 D2549020803600 D2549020803800
D2549020805000 D2549020805400 D2549020807400 D2549020808200
D2549020809400 D2549020809800 D2549020814200 D2549030400000
D2549030400200 D2549030400400 D2549030401200 D2549030402000
D2549030402200 D2549030402600 D2549030402800 D2549030403400
D2549030403800 D2549030404000 D2549030404600 D2549030405200
D2549030405400 D2549030407200 D2549030500400 D2549030500600
D2549030500800 D2549030501000 D2549030501200 D2549030501400
D2549030501800 D2549030502000 D2549030502400 D2549030502600
D2549030502800 D2549030503000 D2549030503400 D2549030503600
D2549030503800 D2549030504000 D2549030504200 D2549030504600
D2549030504800 D2549030505200 D2549030505400 D2549030505600
D2549030505800 D2549030506000 D2549030506200 D2549030506400
D2549030506600 D2549030506800 D2549030507000 D2549030507200
D2549030507400 D2549030507600 D2549030507800 D2549030508000
D2549030508200 D2549030508400 D2549030508600 D2549030508800
D2549030509200 D2549030509400 D2549030509600 D2549030509800
D2549030510000 D2549030510200 D2549030510400 D2549030510600
D2549030510800 D2549030511000 D2549030511200 D2549030511400
D2549030511600 D2549030511800 D2549030512000 D2549030512200
D2549030512400 D2549030512800 D2549030513000 D2549030513200
D2549030513400 D2549030513600 D2549030513800 D2549030514000
D2549030514200 D2549030514400 D2549030514600 D2549030514800
D2549030600000 D2549030600200 D2549030600400 D2549030600600
D2549030600800 D2549030601000 D2549030601200 D2549030601400
D2549030601600 D2549030601800 D2549030602000 D2549030602200

D2549030602400 D2549030602600 D2549030602800 D2549030603000 D2549030603200 D2549030603400 D2549030603600 D2549030603800 D2549030604200 D2549030604400 D2549030604600 D2549030604800 D2549030605000 D2549030605200 D2549030605400 D2549030605600 D2549030605800 D2549030606200 D2549030606400 D2549030606600 D2549030606800 D2549030607000 D2549030607200 D2549030607400 D2549030607600 D2549030607800 D2549030608000 D2549030608200 D2549030608600 D2549030608800 D2549030609000 D2549030609200 D2549030609800 D2549030610000 D2549030610400 D2549030610600 D2549030611000 D2549030611200 D2549030611400 D2549030611600 D2549030611800 D2549030612000 D2549030612200 D2549030612400 D2549030612600 D2549030612800 D2549030613200 D2549030613400 D2549030613600 D2549030613800 D2549030614200 D2549030614400 D2549030614600 D2549030614800 R225401107-004 R225401115-000 R225401115-002 R225401128-000 R225401134-000 R225401134-002 R225401134-004 R225401134-006 R225401134-008 R225401134-010 R225401134-012 R225401134-016 R225401134-018 R225401134-020 R225401134-022 R225401134-024 R225401134-026 R225401134-028 R225401134-030 R225401134-032 R225401134-034 R225401134-036 R225401136-000 R225401136-010 R225401136-016 R225401136-020 R225401136-022 R225401137-000 R225401137-002 R225401137-004 R225401137-006 R225401137-008 R225401137-010 R225401137-012 R225401137-014 R225401137-016 R225401139-000 R225401142-000 R225401142-002 R225401145-000 R225401145-002 R225401145-004 R225401145-006 R225401145-008 R225401145-012 R225401145-014 R225401146-000 R225401146-002 R225401152-000 R225401152-002 R225401152-004 R225401152-006 R225401153-000 R225401159-000 R225401160-000 R225401160-002 R225401168-000 R225401168-002 R225401168-004 R225401168-006 R225401168-008 R225401168-010 R225401168-012 R225401168-014 R225401168-016 R225401168-018 R225401168-020 R225401168-022 R225401168-024 R225401168-026 R225401168-028 R225401172-000 R225401172-002 R225401172-004 R225401172-006 R225401172-008 R225401172-010 R225401172-012 R225401172-014 R225401172-016 R225401172-018 R225401175-000 R225401175-002 R225401176-000 R225401183-000 R225401183-002 R225401183-008 R225401188-000 R225401188-002 R225401188-004 R225401188-006 R225401192-000 R225401195-000 R225401196-000 R225401196-002 R225401196-004 R225401196-006 R225401196-034 R225401196-036 R225401196-038 R225401196-046 R225401196-048 R225401196-050 R225401196-052 R225401199-004 R225401199-006 R225401600-000 R225401600-002 R225401600-004 R225401603-000 R225401605-000 R225401605-002 R225401611-010 R225401613-000 R225401614-000 R225401618-000 R225401618-002 R225401619-000 R225401619-002 R225401625-000 R225401629-000 R225401629-002 R225401693-000

3. Removal of the Side Wall

(a) Not applicable.

CLEANING

TASK 25-41-51-100-807-A01

1. General

   A. For all CLEANING information refer to SPM 25-00-01.

TASK 25-41-51-100-801-A01

2. Cleaning of the Component Parts

A. General

WARNING: BE CAREFUL WHEN YOU USE SOLVENTS/CLEANING AGENTS, SEALANTS AND OTHER MATERIALS. OBEY THE MATERIAL MANUFACTURER'S INSTRUCTIONS AND THE LOCAL REGULATIONS. MAKE SURE THAT THERE IS A GOOD FLOW OF AIR THROUGH THE WORK AREA. DO NOT BREATHE THE FUMES. DO NOT SMOKE. DO NOT USE THESE MATERIALS NEAR A FLAME, SPARKS OR SOURCES OF HEAT. USE PROTECTIVE CLOTHING, GOGGLES AND GLOVES. IF YOU GET ONE OF THESE MATERIALS ON YOUR SKIN OR IN YOUR EYES, FLUSH IT AWAY WITH A FLOW OF CLEAN WATER. IF YOU GET ONE OF THESE MATERIALS IN YOUR MOUTH, GET IMMEDIATE MEDICAL AID. IN GENERAL, THESE MATERIALS ARE POISONOUS, FLAMMABLE AND SKIN IRRITANTS.

CAUTION: USE ONLY THE SPECIFIED CLEANING AGENTS. CLEANING AGENTS WHICH ARE NOT SPECIFIED CAN CAUSE DAMAGE.

For the cleaning procedure of the subcomponents refer to the manufacturer's manuals written in General.

B. Job Set-up Information

(1) Consumable Materials

REFERENCE	DESIGNATION
14-001A	Deodorant Toilet Non Formaldehyde Base
11-003	Methyl-Ethyl-Ketone

Table 4001
Consumable Materials

(2) Fixtures, Tools, Test and Support Equipment

REFERENCE	DESIGNATION
	vacuum cleaner

Table 4002
Fixtures, Tools, Test and Support Equipment

C. Procedure

SUB TASK 25-41-51-160-001-A01

1. Cleaning of the Component Parts

   (a) Disinfect countertop areas, undersink area and toilet shroud with theMaterial No. 14-001A Deodorant Toilet Non Formaldehyde Base.

   (b) Remove all loose dirt with a vacuum cleaner or a soft brush.

   WARNING: BE CAREFUL WHEN YOU USE MATERIAL NO. 11-003 METHYL-ETHYLKETONE. OBEY THE MATERIAL MANUFACTURER'S INSTRUCTIONS.

   (c) Remove all old sealant and dirt with the Material No. 11-003 Methyl-Ethyl-Ketone or with a nonmetallic scraper.

TASK 25-41-51-100-802-A01

3. Cleaning of PU-Coatings, PA-Materials, Painted Components, PC- andPVF-Films

A. General

CAUTION: USE ONLY THE SPECIFIED CLEANING AGENTS. CLEANING AGENTS WHICH ARE NOT SPECIFIED CAN CAUSE DAMAGE.

For the cleaning procedure of the subcomponents refer to the manufacturer's manuals written in General.

B. Job Set-up Information

(1) Consumable Materials

REFERENCE	DESIGNATION
19-003	Lint-Free Cotton Cloth

Table 4003
Consumable Materials

(2) Fixtures, Tools, Test and Support Equipment

REFERENCE	DESIGNATION
	soft brush

Table 4004
Fixtures, Tools, Test and Support Equipment

C. Procedure

SUB TASK 25-41-51-160-002-A01

1. Cleaning of PU-Coatings, PA-Materials, Painted Components, PC- andPVF-Films

NOTE: Do not wash PC-films with MEK or trichloroethylen.

(a) Clean PU-coatings, PA-materials, painted components, PC- and PVF-filmswith a mild soap solution. Use a soft brush or a clean, Material No. 19-003 Lint-Free Cotton Cloth.

(b) Dry all parts with a clean, dry, Material No. 19-003 Lint-Free Cotton Cloth or a hot-air blower.

TASK 25-41-51-100-803-A01

4. Cleaning of Stainless Steel Parts

A. General

WARNING: BE CAREFUL WHEN YOU USE SOLVENTS/CLEANING AGENTS, SEALANTS AND OTHER MATERIALS. OBEY THE MATERIAL MANUFACTURER'S INSTRUCTIONS AND THE LOCAL REGULATIONS. MAKE SURE THAT THERE IS A GOOD FLOW OF AIR THROUGH THE WORK AREA. DO NOT BREATHE THE FUMES. DO NOT SMOKE. DO NOT USE THESE MATERIALS NEAR A FLAME, SPARKS OR SOURCES OF HEAT. USE PROTECTIVE CLOTHING, GOGGLES AND GLOVES. IF YOU GET ONE OF THESE MATERIALS ON YOUR SKIN OR IN YOUR EYES, FLUSH IT AWAY WITH A FLOW OF CLEAN WATER. IF YOU GET ONE OF THESE MATERIALS IN YOUR MOUTH, GET IMMEDIATE MEDICAL AID. IN GENERAL, THESE MATERIALS ARE POISONOUS, FLAMMABLE AND SKIN IRRITANTS.

CAUTION: USE ONLY THE SPECIFIED CLEANING AGENTS. CLEANING AGENTS WHICH ARE NOT SPECIFIED CAN CAUSE DAMAGE.

For the cleaning procedure of the subcomponents refer to the manufacturer's manuals written in General.

B. Job Set-up Information

(1) Consumable Materials

REFERENCE	DESIGNATION
11-016	Safety Solvent

Table 4005
Consumable Materials

C. Procedure

SUB TASK 25-41-51-160-003-A01

1. Cleaning of Stainless Steel Parts

WARNING: BE CAREFUL WHEN YOU USE MATERIAL NO. 11-016 SAFETY SOLVENT. OBEY THE MATERIAL MANUFACTURER'S INSTRUCTIONS.

(a) Clean all stainless steel parts with Material No. 11-016 Safety Solvent.

TASK 25-41-51-100-804-A01

5. Cleaning of the Electrical System

A. General

WARNING: BE CAREFUL WHEN YOU USE SOLVENTS/CLEANING AGENTS, SEALANTS AND OTHER MATERIALS. OBEY THE MATERIAL MANUFACTURER'S INSTRUCTIONS AND THE LOCAL REGULATIONS. MAKE SURE THAT THERE IS A GOOD FLOW OF AIR THROUGH THE WORK AREA. DO NOT BREATHE THE FUMES. DO NOT SMOKE. DO NOT USE THESE MATERIALS NEAR A FLAME, SPARKS OR SOURCES OF HEAT. USE PROTECTIVE CLOTHING, GOGGLES AND GLOVES. IF YOU GET ONE OF THESE MATERIALS ON YOUR SKIN OR IN YOUR EYES, FLUSH IT AWAY WITH A FLOW OF CLEAN WATER. IF YOU GET ONE OF THESE MATERIALS IN YOUR MOUTH, GET IMMEDIATE MEDICAL AID. IN GENERAL, THESE MATERIALS ARE POISONOUS, FLAMMABLE AND SKIN IRRITANTS.

CAUTION: USE ONLY THE SPECIFIED CLEANING AGENTS. CLEANING AGENTS WHICH ARE NOT SPECIFIED CAN CAUSE DAMAGE.

For the cleaning procedure of the subcomponents refer to the manufacturer's manuals written in General.

B. Job Set-up Information

(1) Consumable Materials

REFERENCE	DESIGNATION
19-003	Lint-Free Cotton Cloth
11-010	Isopropyl Alcohol

Table 4006
Consumable Materials

(2) Fixtures, Tools, Test and Support Equipment

REFERENCE	DESIGNATION
	soft nonmetallic brush

Table 4007
Fixtures, Tools, Test and Support Equipment

C. Procedure

SUB TASK 25-41-51-160-004-A01

1. Cleaning of the Electrical System

CAUTION: REMOVE ELECTRICAL POWER IF YOU WORK ON EQUIPMENT WITH ELECTRICAL INSTALLATION.

(a) Lightly clean all electrical parts which you can get access to witha soft nonmetallic brush.

(b) Blow loose dust and dirt from all parts with dry, filtered air.

WARNING: BE CAREFUL WHEN YOU USE MATERIAL NO. 11-010 ISOPROPYL ALCOHOL. OBEY THE MATERIAL MANUFACTURER'S INSTRUCTIONS.

(c) Clean the surfaces of the electrical units with a clean, Material No. 19-003 Lint-Free Cotton Cloth or a soft bristle brush moist with Material No. 11-010 Isopropyl Alcohol and permit to air dry.

TASK 25-41-51-100-805-A01

6. Cleaning of the Water System

A. General

WARNING: BE CAREFUL WHEN YOU USE SOLVENTS/CLEANING AGENTS, SEALANTS AND OTHER MATERIALS. OBEY THE MATERIAL MANUFACTURER'S INSTRUCTIONS AND THE LOCAL REGULATIONS. MAKE SURE THAT THERE IS A GOOD FLOW OF AIR THROUGH THE WORK AREA. DO NOT BREATHE THE FUMES. DO NOT SMOKE. DO NOT USE THESE MATERIALS NEAR A FLAME, SPARKS OR SOURCES OF HEAT. USE PROTECTIVE CLOTHING, GOGGLES AND GLOVES. IF YOU GET ONE OF THESE MATERIALS ON YOUR SKIN OR IN YOUR EYES, FLUSH IT AWAY WITH A FLOW OF CLEAN WATER. IF YOU GET ONE OF THESE MATERIALS IN YOUR MOUTH, GET IMMEDIATE MEDICAL AID. IN GENERAL, THESE MATERIALS ARE POISONOUS, FLAMMABLE AND SKIN IRRITANTS.

CAUTION: USE ONLY THE SPECIFIED CLEANING AGENTS. CLEANING AGENTS WHICH ARE NOT SPECIFIED CAN CAUSE DAMAGE.

For the cleaning procedure of the subcomponents refer to the manufacturer's manuals written in General.

B. Job Set-up Information

(1) Consumable Materials

REFERENCE	DESIGNATION
14-001A	Deodorant Toilet Non Formaldehyde Base

Table 4008
Consumable Materials

C. Procedure

SUB TASK 25-41-51-160-005-A01

1. Cleaning of the Water System

(a) Flush the full installation system with a solution of Material No. 14-001A Deodorant Toilet Non Formaldehyde Base or an equivalent, and distilled water.

(b) Flush the full installation system with fresh potable water.

(c) Use clean, dry compressed air to blow out and dry parts.

TASK 25-41-51-100-806-A01

7. Cleaning of the Plastic Washbasin

A. General

WARNING: BE CAREFUL WHEN YOU USE SOLVENTS/CLEANING AGENTS, SEALANTS AND OTHER MATERIALS. OBEY THE MATERIAL MANUFACTURER'S INSTRUCTIONS AND THE LOCAL REGULATIONS. MAKE SURE THAT THERE IS A GOOD FLOW OF AIR THROUGH THE WORK AREA. DO NOT BREATHE THE FUMES. DO NOT SMOKE. DO NOT USE THESE MATERIALS NEAR A FLAME, SPARKS OR SOURCES OF HEAT. USE PROTECTIVE CLOTHING, GOGGLES AND GLOVES. IF YOU GET ONE OF THESE MATERIALS ON YOUR SKIN OR IN YOUR EYES, FLUSH IT AWAY WITH A FLOW OF CLEAN WATER. IF YOU GET ONE OF THESE MATERIALS IN YOUR MOUTH, GET IMMEDIATE MEDICAL AID. IN GENERAL, THESE MATERIALS ARE POISONOUS, FLAMMABLE AND SKIN IRRITANTS.

CAUTION: USE ONLY THE SPECIFIED CLEANING AGENTS. CLEANING AGENTS WHICH ARE NOT SPECIFIED CAN CAUSE DAMAGE.

For the cleaning procedure of the subcomponents refer to the manufacturer's manuals written in General.

B. Job Set-up Information

(1) Consumable Materials

REFERENCE	DESIGNATION
11-003	Methyl-Ethyl-Ketone
19-011	Scotch Brite Pads
04-012	Pure Mineral Vaseline or Petro-Latum

Table 4009
Consumable Materials

C. Procedure

SUB TASK 25-41-51-160-006-A01

1. Cleaning of the Plastic Washbasin

WARNING: **BE CAREFUL WHEN YOU USE MATERIAL NO. 11-003 METHYL-ETHYLKETONE. OBEY THE MATERIAL MANUFACTURER'S INSTRUCTIONS.**

(a) Clean the washbasin with a Material No. 11-003 Methyl-Ethyl-Ketone or a powder cleaning agent, using the Material No. 19-011 Scotch Brite Pads for old and dried up pollutions.

WARNING: **BE CAREFUL WHEN YOU USE MATERIAL NO. 11-003 METHYL-ETHYLKETONE. OBEY THE MATERIAL MANUFACTURER'S INSTRUCTIONS.**

WARNING: **BE CAREFUL WHEN YOU USE MATERIAL NO. 04-012 PURE MINERAL VASELINE OR PETRO-LATUM. OBEY THE MATERIAL MANUFACTURER'S INSTRUCTIONS.**

(b) After using a Material No. 11-003 Methyl-Ethyl-Ketone protect the surface with the Material No. 04-012 Pure Mineral Vaseline or Petro-Latum.

THIS PAGE IS INTENTIONALLY LEFT BLANK

INSPECTION/CHECK

TASK 25-41-51-200-813-A01

1. General

   A. For all INSPECTION/CHECK information refer to SPM 25-00-01.

TASK 25-41-51-200-801-A01

2. Check of the Attachment of the Subcomponents

A. General

(1) For repair procedure refer to REPAIR.

NOTE: For the check procedure of the subcomponents refer to the manufacturer's manuals written in General.

B. Job Set-up Information

(1) Not applicable

C. Procedure

SUB TASK 25-41-51-210-001-A01

1. Check of the Attachment of the Subcomponents

(a) Examine all the attachment points for correct condition.

1 Tighten the attachments if necessary.

TASK 25-41-51-200-802-A01

3. Check of the Sandwich Panels and Doors

A. General

(1) For repair procedure refer to REPAIR.

NOTE: For the check procedure of the subcomponents refer to the manufacturer's manuals written in General.

B. Job Set-up Information

(1) Not applicable

C. Procedure

SUB TASK 25-41-51-210-002-A01

1. Check of the Sandwich Panels and Doors

(a) Examine the sandwich panels and the doors for deformation, cracks, holes and delamination.

1 Replace the deformed sandwich panels and doors.

2 The maximum edge length of damaged areas is 200 mm (7.874 in.) x 200 mm (7.874 in.).

3 Rebond the delaminated decorative material.

(b) Examine the lower area of the lavatory wall for corrosion. Up to a max. height of 400 mm (15.748 in.) you can repair the wall. If this area is higher change the complete wall.

(c) Examine the lower aluminium attachment fittings from the lavatory walls for corrosion and damage.

NOTE: For detailed information refer to SB 25-1365. (INSPECTION/REPAIR of LAVATORY WALL CORROSION).

TASK 25-41-51-200-803-A01

4. Check of the Threaded Inserts

A. General

(1) For repair procedure refer to REPAIR.

NOTE: For the check procedure of the subcomponents refer to the manufacturer's manuals written in General.

B. Job Set-up Information

(1) Not applicable

C. Procedure

SUB TASK 25-41-51-210-003-A01

1. Check of the Threaded Inserts

(a) Examine the threaded inserts for correct installation and condition of the thread.

1 Replace damaged inserts.

TASK 25-41-51-200-804-A01

5. Check of the Metal Parts

A. General

(1) For repair procedure refer to REPAIR.

NOTE: For the check procedure of the subcomponents refer to the manufacturer's manuals written in General.

B. Job Set-up Information

(1) Not applicable

C. Procedure

SUB TASK 25-41-51-210-004-A01

1. Check of the Metal Parts

(a) Examine the metal parts for damage and corrosion.

TASK 25-41-51-200-805-A01

6. Check of the Upper and Lower Attachment Fittings

A. General

(1) For repair procedure refer to REPAIR.

NOTE: For the check procedure of the subcomponents refer to the manufacturer's manuals written in General.

B. Job Set-up Information

(1) Not applicable

C. Procedure

SUB TASK 25-41-51-210-005-A01

1. Check of the Upper and Lower Attachment Fittings

(a) Examine the upper and the lower attachment fittings for cracks, loose fit and damaged holes.

1 If any upper or lower attachment fitting shows any signs of damage you must replace it.

TASK 25-41-51-200-806-A01

7. Check of the Sealing Strips

A. General

(1) For repair procedure refer to REPAIR.

NOTE: For the check procedure of the subcomponents refer to the manufacturer's manuals written in General.

B. Job Set-up Information

(1) Not applicable

C. Procedure

SUB TASK 25-41-51-210-006-A01

1. Check of the Sealing Strips

(a) Examine the seating strips for wear, correct fit and alignment.

TASK 25-41-51-200-807-A01

8. Check of the Nursing Table

A. General

(1) For repair procedure refer to REPAIR.

NOTE: For the check procedure of the subcomponents refer to the manufacturer's manuals written in General.

B. Job Set-up Information

(1) Not applicable

C. Procedure

SUB TASK 25-41-51-210-007-A01

1. Check of the Nursing Table

(a) Examine the attachment of the nursing table.

(b) Examine the retainer for operation.

TASK 25-41-51-200-808-A01

9. Check of the Air Vent

A. General

(1) For repair procedure refer to REPAIR.

NOTE: For the check procedure of the subcomponents refer to the manufacturer's manuals written in General.

B. Job Set-up Information

(1) Not applicable

C. Procedure

SUB TASK 25-41-51-210-008-A01

1. Check of the Air Vent

(a) Examine the attachment and the condition of the air vent.

(b) Make sure that the opening of the air vent is clean.

TASK 25-41-51-200-809-A01

10. Check of the Latches and Fasteners

A. General

(1) For repair procedure refer to REPAIR.

NOTE: For the check procedure of the subcomponents refer to the manufacturer's manuals written in General.

B. Job Set-up Information

(1) Not applicable

C. Procedure

SUB TASK 25-41-51-210-009-A01

1. Check of the Latches and Fasteners

(a) Examine the correct operation of the latches and the fasteners.

(b) Make sure that the latches and the fasteners are clean.

TASK 25-41-51-200-810-A01

11. Check of the Placards

A. General

(1) For repair procedure refer to REPAIR.

NOTE: For the check procedure of the subcomponents refer to the manufacturer's manuals written in General.

B. Job Set-up Information

(1) Not applicable

C. Procedure

SUB TASK 25-41-51-210-010-A01

1. Check of the Placards

(a) Examine the placards for presence and attachment.

TASK 25-41-51-200-811-A01

12. Check of the Water System

A. General

(1) For repair procedure refer to REPAIR.

NOTE: For the check procedure of the subcomponents refer to the manufacturer's manuals written in General.

B. Job Set-up Information

(1) Not applicable

C. Procedure

SUB TASK 25-41-51-210-011-A01

1. Check of the Water System

(a) Examine the clamps and the supports for attachment and damage.

(b) Examine the hoses, the tubes, the fittings and the hose connections for attachment, damage and leaks.

(c) Examine the hoses and the gaskets and/or O-rings for signs of ageing,

1 Replace damaged hoses, gaskets and/or O-rings.

TASK 25-41-51-200-812-A01

13. Check of the Electrical System

A. General

(1) For repair procedure refer to REPAIR.

NOTE: For the check procedure of the subcomponents refer to the manufacturer's manuals written in General.

B. Job Set-up Information

(1) Not applicable

C. Procedure

SUB TASK 25-41-51-210-012-A01

1. Check of the Electrical System

(a) Examine all electrical connections for tightness and contact.

(b) Make sure that the connections are clean.

(c) Examine the plugs and the receptacles and make sure that there are no pins loose, broken or missing.

(d) Examine the terminal lugs for firm connection to the wire ends.

(e) Examine connections on terminal boards and ground studs for corrosion.

(f) Examine soldered and crimped connections for attachment.

(g) Examine the lavatory light lens for damage and presence.

(h) Make sure that the lavatory light lens is clean.

REPAIR

TASK 25-41-51-300-801-A01

1. General

   A. For all standard REPAIR information refer to SPM 25-00-01.

TASK 25-41-51-350-804-A01

2. Materials

A. Decorative Foils

DESCRIPTION	PART NO.	WHERE USED
Decor	S017851	Side wall (R225401662-000, R225401662-002, R225401689-004, R225401689-006)
		Single blade door (R225401662-000, R225401662-002, R225401689-004, R225401689-006)
	S017836	Washstand cover (R225401662-000, R225401662-002, R225401689-004, R225401689-006)
	S017844	Side wall (R225401662-000, R225401662-002, R225401689-004, R225401689-006)
		Post assy (R225401662-000, R225401662-002, R225401689-004, R225401689-006)
		Single blade door (R225401662-000, R225401662-002, R225401689-004, R225401689-006)
		Housing (R225401662-000, R225401662-002, R225401689-004, R225401689-006)
	0243FBB125-2NI	Single blade door (D2549010406400, D2549010402400)
		Side wall (D2549010406400, D2549010402400)
	0243FBG15-7NI	Housing (D2549020503600)
	0243FBH12-17NI	Single blade door (D2549010400400, D2549010406400, D2549010612400, D2549020503600, D2549010402400, R225401614-000)
		Housing (D2549010400400, D2549010406400, D2549010612400, D2549020503600, D2549010402400, R225401614-000)
		Post assy (D2549010400400, D2549010406400, D2549010612400, D2549020503600, D2549010402400, R225401614-000)
		Side wall (D2549010400400, D2549010612400, D2549020503600,

		D2549010402400, D2549010406400, R225401614-000)
	0243FBH115-68NI	Single blade door (D2549010400400, D2549010612400, D2549020503600) Side wall (D2549010400400, D2549010612400, D2549020503600)
	0243FBH115-68NS	Single door assy (R225401196-000, R225401196-002, R225401196-004, R225401196-006, R225401196-008, R225401196-010, R225401196-012, R225401196-014, R225401196-016, R225401196-018, R225401196-020, R225401196-022, R225401196-024) Side wall assy (R225401196-000, R225401196-002, R225401196-004, R225401196-006, R225401196-008, R225401196-010, R225401196-012, R225401196-014, R225401196-016, R225401196-018, R225401196-020, R225401196-022, R225401196-024)
	0243FBH12-17NS	Side wall assy (R225401196-000, R225401196-002, R225401196-004, R225401196-006, R225401196-008, R225401196-010, R225401196-012, R225401196-014, R225401196-016, R225401196-018, R225401196-020, R225401196-022, R225401196-024) Post assy (R225401196-000, R225401196-002, R225401196-004, R225401196-006, R225401196-008, R225401196-010, R225401196-012, R225401196-014, R225401196-016, R225401196-018, R225401196-020, R225401196-022, R225401196-024) Housing assy (R225401196-000, R225401196-002, R225401196-004, R225401196-006, R225401196-008, R225401196-010, R225401196-012, R225401196-014, R225401196-016, R225401196-018, R225401196-020, R225401196-022, R225401196-024)

		Single door assy (R225401196-000, R225401196-002, R225401196-004, R225401196-006, R225401196-008, R225401196-010, R225401196-012, R225401196-014, R225401196-016, R225401196-018, R225401196-020, R225401196-022, R225401196-024)
	0243FBH12-16NS	Single door assy (R225401196-046, R225401196-048, R225401196-050, R225401196-052, R225401196-054, R225401196-056, R225401196-058, R225401196-060, R225401196-062, R225401196-064, R225401196-066, R225401196-068, R225401196-070) Post assy (R225401196-046, R225401196-048, R225401196-050, R225401196-052, R225401196-054, R225401196-056, R225401196-058, R225401196-060, R225401196-062, R225401196-064, R225401196-066, R225401196-068, R225401196-070) Housing assy (R225401196-046, R225401196-048, R225401196-050, R225401196-052, R225401196-054, R225401196-056, R225401196-058, R225401196-060, R225401196-062, R225401196-064, R225401196-066, R225401196-068, R225401196-070) Side wall assy (R225401196-046, R225401196-048, R225401196-050, R225401196-052, R225401196-054, R225401196-056, R225401196-058, R225401196-060, R225401196-062, R225401196-064, R225401196-066, R225401196-068, R225401196-070)

	0243BBG382-62XS	Side wall assy (R225401196-046, R225401196-048, R225401196-050, R225401196-052, R225401196-054, R225401196-056, R225401196-058, R225401196-060, R225401196-062, R225401196-064, R225401196-066, R225401196-068, R225401196-070)

Table 6001
Decorative Foils

Paint

DESCRIP-TION	PART NO.	WHERE USED
Paint	ABS5650BB12-36A	Seat cover dispenser (R225401662-000, R225401662-002, R225401689-004, R225401689-006) Flap (R225401662-000, R225401662-002, R225401689-004, R225401689-006) Lamp cover (R225401662-000, R225401662-002, R225401689-004, R225401689-006) Cover (R225401662-000, R225401662-002, R225401689-004, R225401689-006) Air extraction grille (R225401662-000, R225401662-002, R225401689-004, R225401689-006) Nursing table (R225401662-000, R225401662-002, R225401689-004, R225401689-006) Nursing table hook (R225401662-000, R225401662-002, R225401689-004, R225401689-006) Water cup dispenser (R225401662-000, R225401662-002, R225401689-004, R225401689-006) Service cabinet (R225401662-000, R225401662-002, R225401689-004, R225401689-006) Toilet seat assy (R225401662-000, R225401662-002, R225401689-004, R225401689-006) Unit cover (R225401662-000, R225401662-002, R225401689-004, R225401689-006) Bracket (R225401662-000, R225401662-002, R225401689-004, R225401689-006)

		Housing (R225401662-000, R225401662-002, R225401689-004, R225401689-006)
		Rear wall (R225401662-000, R225401662-002, R225401689-004, R225401689-006)
		Ceiling (R225401662-000, R225401662-002, R225401689-004, R225401689-006)
	ALEXIT-FST 346-57 73V5.7	Paper dispenser (R225401662-000, R225401662-002, R225401689-004, R225401689-006)
	DAN1200DA2.16/5018DA2.16	Paper dispenser (D2549010400400, D2549010406400, D2549010612400, D2549020503600, D2549010402400)
		Seat cover (D2549010400400, D2549010612400, D2549020503600)
		Bracket (D2549010400400, D2549010406400, D2549010612400, D2549020503600, D2549010402400)
		Unit cover (D2549010400400, D2549010406400, D2549010612400, D2549020503600, D2549010402400)
		Washstand cover (D2549010400400, D2549010406400, D2549010612400, D2549020503600, D2549010402400)
		Washstand door (D2549010400400, D2549010406400, D2549010612400, D2549020503600, D2549010402400)
	DAN1200DA2.8/5018DA2.8	Air extraction grille (D2549010400400, D2549010406400, D2549010612400, D2549010402400)
		Air grille (D2549020503600)
		Ceiling (D2549020503600)
		Seat cover dispenser (D2549010400400, D2549010406400, D2549010612400, D2549010402400)

		Flap (D2549010400400, D2549010406400, D2549010612400, D2549020503600, D2549010402400)
		Nursing table hook (D2549010400400, D2549010406400, D2549010612400, D2549010402400)
		Housing (D2549020503600)
		Nursing table (D2549010400400, D2549010406400, D2549010612400, D2549020503600, D2549010402400)
		Oxygen container assy cover (D2549010400400, D2549010406400, D2549010612400, D2549020503600, D2549010402400)
		Rear wall (D2549020503600)
		Service box (D2549010400400, D2549010406400, D2549010612400, D2549010402400)
		Spacer block (D2549010400400, D2549010406400, D2549010612400, D2549010402400)
	DCIN800-DA2.11	Floor pan (D2549010400400, D2549010402400, D2549010406400)
	DCIN800-DA2.8	Ceiling (D2549010400400, D2549010406400, D2549010612400, D2549010402400)
		Housing (D2549010400400, D2549010402400, D2549010406400)
		Lamp cover (D2549010400400, D2549010406400, D2549010612400, D2549020503600, D2549010402400)
		Rear wall (D2549010400400, D2549010406400, D2549010612400, D2549010402400)
	DCIN800-DA5.7	Housing (D2549010400400, D2549010402400, D2549010406400)

		Sheet (D2549010400400, D2549010406400, D2549010612400, D2549010402400)
	DCIN800-DA2.49	Ceiling assy (R225401196-046, R225401196-048, R225401196-050, R225401196-052, R225401196-054, R225401196-056, R225401196-058, R225401196-060, R225401196-062, R225401196-064, R225401196-066, R225401196-068, R225401196-070) Louver (R225401196-046, R225401196-048, R225401196-050, R225401196-052, R225401196-054, R225401196-056, R225401196-058, R225401196-060, R225401196-062, R225401196-064, R225401196-066, R225401196-068, R225401196-070) Service cabinet assy (R225401196-046, R225401196-048, R225401196-050, R225401196-052, R225401196-054, R225401196-056, R225401196-058, R225401196-060, R225401196-062, R225401196-064, R225401196-066, R225401196-068, R225401196-070) Service box assy (R225401196-046, R225401196-048, R225401196-050, R225401196-052, R225401196-054, R225401196-056, R225401196-058, R225401196-060, R225401196-062, R225401196-064, R225401196-066, R225401196-068, R225401196-070) Lamp cover assy (R225401196-046, R225401196-048, R225401196-050, R225401196-052, R225401196-054, R225401196-056, R225401196-058, R225401196-060, R225401196-062, R225401196-064, R225401196-066, R225401196-068, R225401196-070) Housing assy (R225401196-046, R225401196-048, R225401196-050, R225401196-052, R225401196-054, R225401196-056, R225401196-058,

		R225401196-060, R225401196-062, R225401196-064, R225401196-066, R225401196-068, R225401196-070) Oxygen container assy cover (R225401196-046, R225401196-048, R225401196-050, R225401196-052, R225401196-054, R225401196-056, R225401196-058, R225401196-060, R225401196-062, R225401196-064, R225401196-066, R225401196-068, R225401196-070) Toilet seat cover dispenser (R225401196-046, R225401196-048, R225401196-050, R225401196-052, R225401196-054, R225401196-056, R225401196-058, R225401196-060, R225401196-062, R225401196-064, R225401196-066, R225401196-068, R225401196-070) Rear wall assy (R225401196-046, R225401196-048, R225401196-050, R225401196-052, R225401196-054, R225401196-056, R225401196-058, R225401196-060, R225401196-062, R225401196-064, R225401196-066, R225401196-068, R225401196-070) Flap (R225401196-046, R225401196-048, R225401196-050, R225401196-052, R225401196-054, R225401196-056, R225401196-058, R225401196-060, R225401196-062, R225401196-064, R225401196-066, R225401196-068, R225401196-070) Hook assy (R225401196-046, R225401196-048, R225401196-050, R225401196-052, R225401196-054, R225401196-056, R225401196-058, R225401196-060, R225401196-062, R225401196-064, R225401196-066, R225401196-068, R225401196-070) Nursing table assy (R225401196-046, R225401196-048, R225401196-050, R225401196-052, R225401196-054, R225401196-056, R225401196-058,

		R225401196-060, R225401196-062, R225401196-064, R225401196-066, R225401196-068, R225401196-070) Spacer (R225401196-046, R225401196-048, R225401196-050, R225401196-052, R225401196-054, R225401196-056, R225401196-058, R225401196-060, R225401196-062, R225401196-064, R225401196-066, R225401196-068, R225401196-070)
	DCIN800-DA5.80	Floor pan assy (R225401196-046, R225401196-048, R225401196-050, R225401196-052, R225401196-054, R225401196-056, R225401196-058, R225401196-060, R225401196-062, R225401196-064, R225401196-066, R225401196-068, R225401196-070)

Table 6002
Paint

B. Close-up

(1) Not applicable

TASK 25-41-51-300-802-A01

3. Repair of the Laminated Floor Pan

A. General

(1) For the rivet replacement refer to the standard riveting procedure.

B. Job Set-up Information

(1) Consumable Materials

REFERENCE	DESIGNATION
08-082	Acrylic Pressure Sensitive Adhesive Film
08-026	Adhesive/Sealant one Part, RTV Silicone Rubber
08-025	Two Component Polyurethane Adhesive
05-056	Glasscloth
08-001	General Purpose Adhesive Honeycomb Filler
16-047	Decorative Paint (Internal Applic.)
05-109	Laminate, A/C Interior
	11-520 Ethanol
08-017A	Adhesive Structuralflexible
	polycarbonat plates DAN 197/198
08-036	Polyester Filler
	LN9073-3.3214T4-1.2

Table 6003
Consumable Materials

(2) Fixtures, Tools, Test and Support Equipment

REFERENCE	DESIGNATION
	milling cutter

Table 6004
Fixtures, Tools, Test and Support Equipment

C. Procedure

WARNING: **BE CAREFUL WHEN YOU USE SOLVENTS/CLEANING AGENTS, SEALANTS AND OTHER MATERIALS. OBEY THE MATERIAL MANUFACTURER'S INSTRUCTIONS AND THE LOCAL REGULATIONS. MAKE SURE THAT THERE IS A GOOD FLOW OF AIR THROUGH THE WORK AREA. DO NOT BREATHE THE FUMES. DO NOT SMOKE. DO NOT USE THESE MATERIALS NEAR A FLAME, SPARKS OR SOURCES OF HEAT. USE PROTECTIVE CLOTHING, GOGGLES AND GLOVES. IF YOU GET ONE OF THESE MATERIALS ON YOUR SKIN OR IN YOUR EYES, FLUSH IT AWAY WITH A FLOW OF CLEAN WATER. IF YOU GET ONE OF THESE MATERIALS IN YOUR MOUTH, GET IMMEDIATE MEDICAL AID. IN GENERAL, THESE MATERIALS ARE POISONOUS, FLAMMABLE AND SKIN IRRITANTS.**

CAUTION: **USE ONLY THE SPECIFIED MATERIALS. MATERIALS WHICH ARE NOT SPECIFIED, CAN CAUSE DAMAGE.**

SUB TASK 25-41-51-350-002-A01

1. Removal and Installation of the NTF-Covering

(a) Remove the NTF-covering as follows:

1 Remove the NTF-covering from the floor pan.

2 Remove the remaining adhesive and the sealant.

(b) Install the NTF-covering as follows:

1 Install the NTF-covering with the Material No. 08-082 Acrylic Pressure Sensitive Adhesive Film to the floor pan.

WARNING: **BE CAREFUL WHEN YOU USE MATERIAL NO. 08-026 ADHESIVE/SEALANT ONE PART, RTV SILICONE RUBBER. OBEY THE MATERIAL MANUFACTURER'S INSTRUCTIONS.**

2 Seal the edges of the NTF-covering with the Material No. 08-026 Adhesive/Sealant one Part, RTV Silicone Rubber.

SUB TASK 25-41-51-350-003-A01

2. Repair of Cracks or Damages in the Floor Bottom (around the NTF-covering, underneath the NTF-covering, behind the toilet shroud and underneath the washbasin)

NOTE: **See Figure 6001.**

(a) Drill a hole with a diameter of 3.5 mm (0.138 in) at each end of the crack.

(b) Remove the damage with a milling cutter and / or a drill (see Figure 6001).

(c) Make the repair area smooth with the abrasive paper, 320 - 400 grade of grain.

(d) Clean the repair area.

WARNING: **BE CAREFUL WHEN YOU USE MATERIAL NO. 08-025 TWO COMPONENT POLYURETHANE ADHESIVE. OBEY THE MATERIAL MANUFACTURER'S INSTRUCTIONS.**

(e) Fill the prepared area with the Material No. 08-025 Two Component Polyurethane Adhesive.

WARNING: **BE CAREFUL WHEN YOU USE MATERIAL NO. 08-025 TWO COMPONENT POLYURETHANE ADHESIVE. OBEY THE MATERIAL MANUFACTURER'S INSTRUCTIONS.**

(f) Let the Material No. 08-025 Two Component Polyurethane Adhesive cure for 1 hour.

WARNING: **BE CAREFUL WHEN YOU USE MATERIAL NO. 05-056 GLASSCLOTH. OBEY THE MATERIAL MANUFACTURER'S INSTRUCTIONS.**

WARNING: **BE CAREFUL WHEN YOU USE MATERIAL NO. 08-001 GENERAL PURPOSE ADHESIVE HONEYCOMB FILLER. OBEY THE MATERIAL MANUFACTURER'S INSTRUCTIONS.**

(g) Install one layer of laminate made from the Material No. 05-056 Glasscloth and the Material No. 08-001 General Purpose Adhesive Honeycomb Filler on both sides.

(h) If necessary, make the repair area smooth with the abrasive paper, 320 - 400 grade of grain.

(i) Clean the repair area.

WARNING: **BE CAREFUL WHEN YOU USE MATERIAL NO. 16-047 DECORATIVE PAINT (INTERNAL APPLIC.). OBEY THE MATERIAL MANUFACTURER'S INSTRUCTIONS.**

(j) Apply the Material No. 16-047 Decorative Paint (Internal Applic.) to the repair area.

SUB TASK 25-41-51-350-004-A01

3. Repair of Cracks or Damages in the Vertical Panel of the Floor Pan

NOTE: **See Figure 6002.**

(a) Drill a hole with a diameter of 3.5 mm (0.138 in) at each end of the crack.

(b) Remove the damage with a milling cutter and / or a drill (see Figure 6002).

(c) Clean the repair area with the Material No. 11-520 Ethanol.

WARNING: **BE CAREFUL WHEN YOU USE MATERIAL NO. 08-025 TWO COMPONENT POLYURETHANE ADHESIVE. OBEY THE MATERIAL MANUFACTURER'S INSTRUCTIONS.**

(d) Fill the prepared area with the Material No. 08-025 Two Component Polyurethane Adhesive.

(e) Make a stiffener from the Material No. 05-109 Laminate, A/C Interior (see Figure 6002).

WARNING: **BE CAREFUL WHEN YOU USE MATERIAL NO. 08-025 TWO COMPONENT POLYURETHANE ADHESIVE. OBEY THE MATERIAL MANUFACTURER'S INSTRUCTIONS.**

(f) Bond the stiffener with the Material No. 08-025 Two Component Polyurethane Adhesive to the repair area.

(g) If necessary, make the repair area smooth with the abrasive paper, 320 - 400 grade of grain.

(h) Clean the repair area.

WARNING: **BE CAREFUL WHEN YOU USE MATERIAL NO. 16-047 DECORATIVE PAINT (INTERNAL APPLIC.). OBEY THE MATERIAL MANUFACTURER'S INSTRUCTIONS.**

(i) Apply the Material No. 16-047 Decorative Paint (Internal Applic.) to the repair area.

SUB TASK 25-41-51-350-005-A01

4. Installation of Preventive Pads

NOTE: **See Figure 6003 and Figure 6004.**

(a) Replacement parts and materials:

NOTE: **Contact the supplier DASELL C5270 for interchangeable parts.**

NOTE: **See TABLE 6005 for the replacement parts and materials.**

Nomenclature	QTY	Material / Remarks / PN
DAN 197/198	AR	Material No. 05-109 or Polycarbonat Plate DAN 197/198

Table 6005
Replacement Part

(c) Make pads 50 mm (1.969 in) x 50 mm (1.969 in) from the Material No. 05-109 Laminate, A/C Interior or polycarbonat plates DAN 197/198 or similar.

WARNING: **BE CAREFUL WHEN YOU USE MATERIAL NO. 08-017A ADHESIVE STRUCTURALFLEXIBLE. OBEY THE MATERIAL MANUFACTURER'S INSTRUCTIONS.**

(d) Bond the pads with the Material No. 08-017A Adhesive Structuralflexible to the floor pan.

WARNING: **BE CAREFUL WHEN YOU USE MATERIAL NO. 16-047 DECORATIVE PAINT (INTERNAL APPLIC.). OBEY THE MATERIAL MANUFACTURER'S INSTRUCTIONS.**

(e) Apply the Material No. 16-047 Decorative Paint (Internal Applic.) to the repair area.

SUB TASK 25-41-51-350-006-A01

5. Repair of the Sealant around the NTF-covering

NOTE: **See Figure 6005.**

(a) If necessary, remove the old damaged sealant with a non-metallic scraper.

(b) Clean the repair area with the Material No. 11-520 Ethanol.

WARNING: **BE CAREFUL WHEN YOU USE MATERIAL NO. 08-026 ADHESIVE/SEALANT ONE PART, RTV SILICONE RUBBER. OBEY THE MATERIAL MANUFACTURER'S INSTRUCTIONS.**

(c) Apply a new seam with the Material No. 08-026 Adhesive/Sealant one Part, RTV Silicone Rubber to the prepared area.

(d) If necessary, make the sealing seam smooth with a spatula or another applicable tool.

SUB TASK 25-41-51-350-007-A01

6. Repair of Scratches on the Surface

(a) Remove the loose dirt and the dust.

(b) Clean the repair area with the Material No. 11-520 Ethanol.

(c) Fill the scratches with the Material No. 08-036 Polyester Filler.

WARNING: **BE CAREFUL WHEN YOU USE MATERIAL NO. 16-047 DECORATIVE PAINT (INTERNAL APPLIC.). OBEY THE MATERIAL MANUFACTURER'S INSTRUCTIONS.**

(d) Apply the Material No. 16-047 Decorative Paint (Internal Applic.) to the repair area.

SUB TASK 25-41-51-350-008-A01

7. Replacement of the Broken Floor Pan

NOTE: **See Figure 6003.**

NOTE: **A repair is not possible and the floor pan must be replaced, if**

the crack is longer the 710 mm (28 in.)
2 cracks at less than 51 mm (2 in.) from each other
the cracks occur like shown in Figure 6003.

(a) See Removal of the Floor Pan, Removal of the Floor Pan and Removal of the Floor Pan for the removal procedure of the floor pan.

(b) See Installation of the Floor Pan, Installation of the Floor Pan and Installation of the Floor Pan for the installation procedure of the floor pan.

SUB TASK 25-41-51-350-009-A01

8. Replacement of the Damaged Floor Pan Inserts (for toilet unit fixation)

NOTE: **See Figure 6006.**

(a) Replacement part:

NOTE: **Contact the supplier DASELL C5270 for interchangeable parts.**

NOTE: **See TABLE 6006 for the replacement part.**

Nomenclature	QTY	Material / PN
Repair Insert	1	NAS1833C4-370

Table 6006
Replacement Part

(c) Remove the damaged floor pan insert.

(d) Enlarge the hole up to a diameter of 17.4 mm (0.685 in) (see Figure 6006).

(e) Clean the repair area with the Material No. 11-520 Ethanol.

WARNING: **BE CAREFUL WHEN YOU USE MATERIAL NO. 08-017A ADHESIVE STRUCTURALFLEXIBLE. OBEY THE MATERIAL MANUFACTURER'S INSTRUCTIONS.**

(f) Bond the repair insert NAS1833C4-370 with the Material No. 08-017A Adhesive Structuralflexible to the enlarged hole.

SUB TASK 25-41-51-350-010-A01

9. Repair of the Floor Pan Surrounding Inserts

NOTE: **See Figure 6007 and Figure 6008.**

(a) Replacement parts and materials:

NOTE: **Contact the supplier DASELL C5270 for interchangeable parts.**

NOTE: **See TABLE 6007 for the replacement parts and materials.**

Nomenclature	QTY	Material / PN
Repair Insert	1	NAS1833C4-370

Table 6007
Replacement Part

(c) Remove the damaged floor pan inserts and the damaged areas.

(d) Clean the repair area with the Material No. 11-520 Ethanol.

WARNING: **BE CAREFUL WHEN YOU USE MATERIAL NO. 08-017A ADHESIVE STRUCTURALFLEXIBLE. OBEY THE MATERIAL MANUFACTURER'S INSTRUCTIONS.**

(e) Fill the prepared area with the Material No. 08-017A Adhesive Structuralflexible (see Figure 6007).

(f) Make a stiffener from the Material No. 05-109 Laminate, A/C Interior or similar (see Figure 6008).

WARNING: **BE CAREFUL WHEN YOU USE MATERIAL NO. 08-017A ADHESIVE STRUCTURALFLEXIBLE. OBEY THE MATERIAL MANUFACTURER'S INSTRUCTIONS.**

(g) Bond the stiffener with the Material No. 08-017A Adhesive Structuralflexible to the repair area (see Figure 6008).

WARNING: **BE CAREFUL WHEN YOU USE MATERIAL NO. 08-017A ADHESIVE STRUCTURALFLEXIBLE. OBEY THE MATERIAL MANUFACTURER'S INSTRUCTIONS.**

(h) Bond the repair insert NAS 1833C4-370 with the Material No. 08-017A Adhesive Structuralflexible to the stiffener.

SUB TASK 25-41-51-350-011-A01

10. Repair of the Shroudfixation

NOTE: **See Figure 6009.**

(a) Replacement parts and materials:

NOTE: **Contact the supplier DASELL C5270 for interchangeable parts.**

NOTE: **See TABLE 6008 for the replacement parts and materials.**

Nomenclature	QTY	Material / PN
Metal Sheet	AR	LN9073-3.3214T4-1.2
Clipnuts	AR	MS21061-08
Countersunk Rivets	AR	LN9199-2406G

Table 6008
Replacement Part

(c) Make the repair area smooth with the abrasive paper, 320 - 400 grade of grain.

(d) Clean the repair area with the Material No. 11-520 Ethanol.

(e) Make a metal sheet from the Material No. LN9073-3.3214T4-1.2 (see Figure 6009).

(f) Install the clipnuts MS21061-08 with the countersunk rivets LN9199-2406G to the sheet (see Figure 6009).

WARNING: **BE CAREFUL WHEN YOU USE MATERIAL NO. 08-001 GENERAL PURPOSE ADHESIVE HONEYCOMB FILLER. OBEY THE MATERIAL MANUFACTURER'S INSTRUCTIONS.**

(g) Bond the sheet with the Material No. 08-001 General Purpose Adhesive Honeycomb Filler to the floor pan (see Figure 6009).

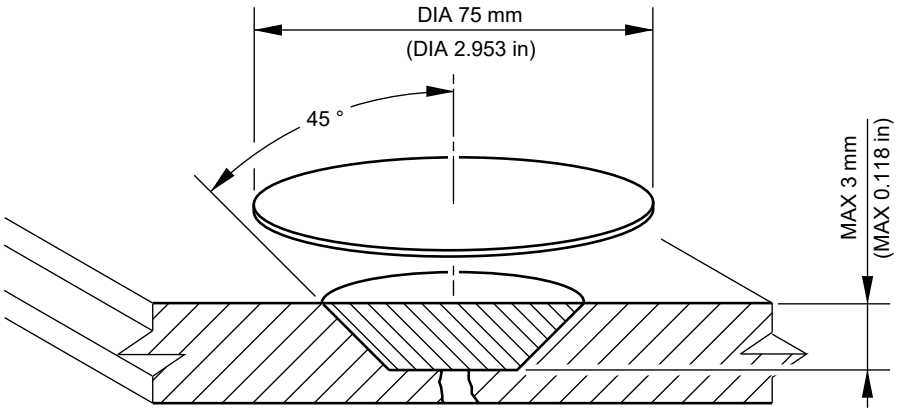

F_CM_254151_1_0110101_01_01

Repair of the Cracks or Damages in the Floor Bottom
Figure 6001/EN254151SHEET10110101

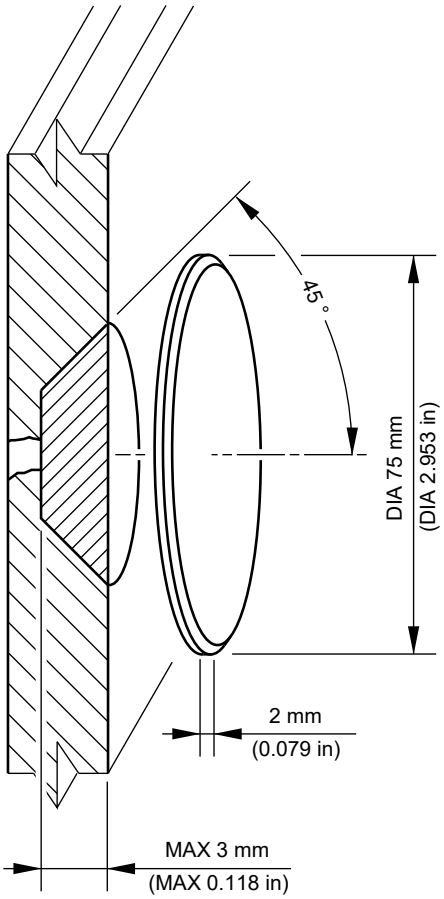

F_CM_254151_1_0120101_01_01

Repair of the Cracks or Damages in the Vertical Panel
Figure 6002/EN254151SHEET10120101

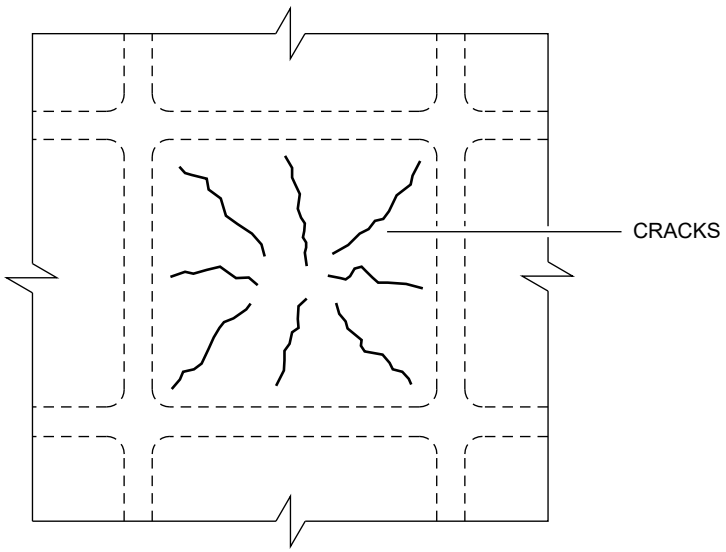

F_CM_254151_1_0130101_01_01

Installation of the Preventive Pads
Figure 6003/EN254151SHEET10130101

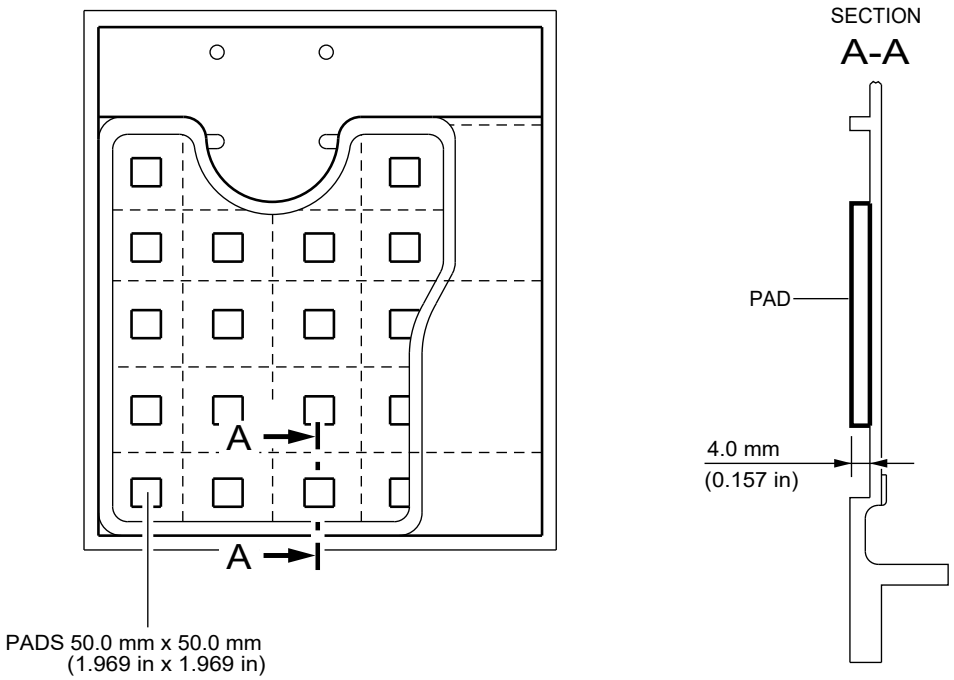

F_CM_254151_1_0140101_01_01

Broken Floor Pan
Figure 6004/EN254151SHEET10140101

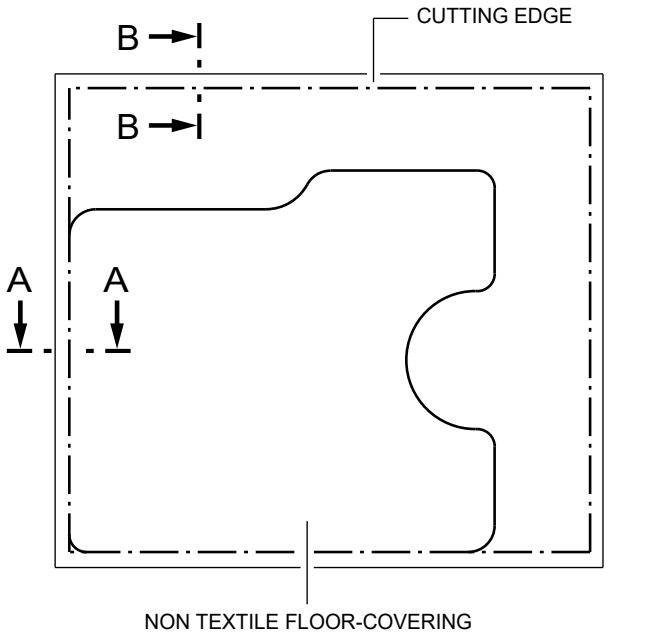

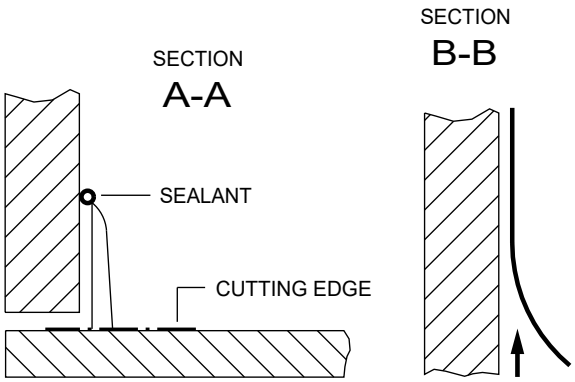

F_CM_254151_1_0150101_01_01

Sealant around the NTF-covering
Figure 6005/EN254151SHEET10150101

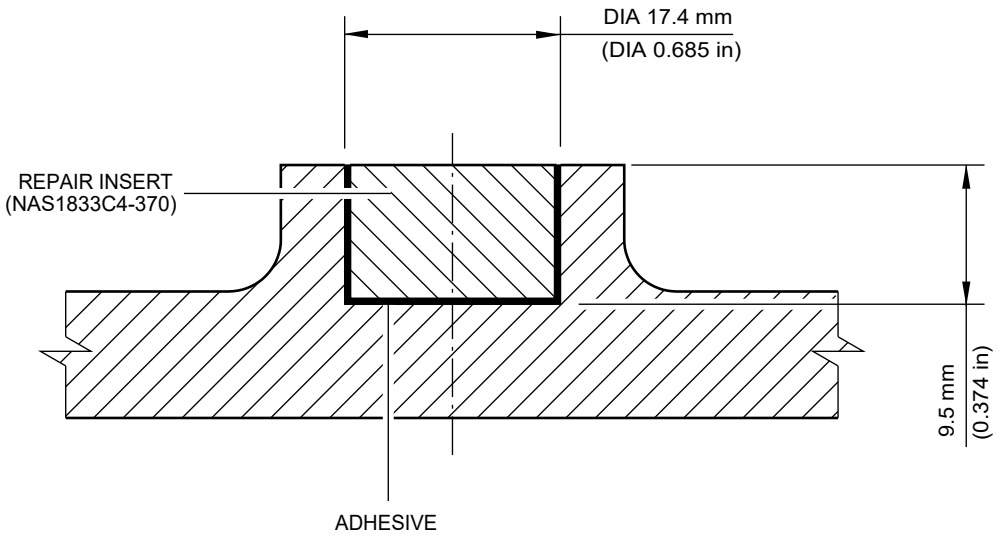

F_CM_254151_1_0160101_01_01

Damaged Floor Pan Inserts
Figure 6006/EN254151SHEET10160101

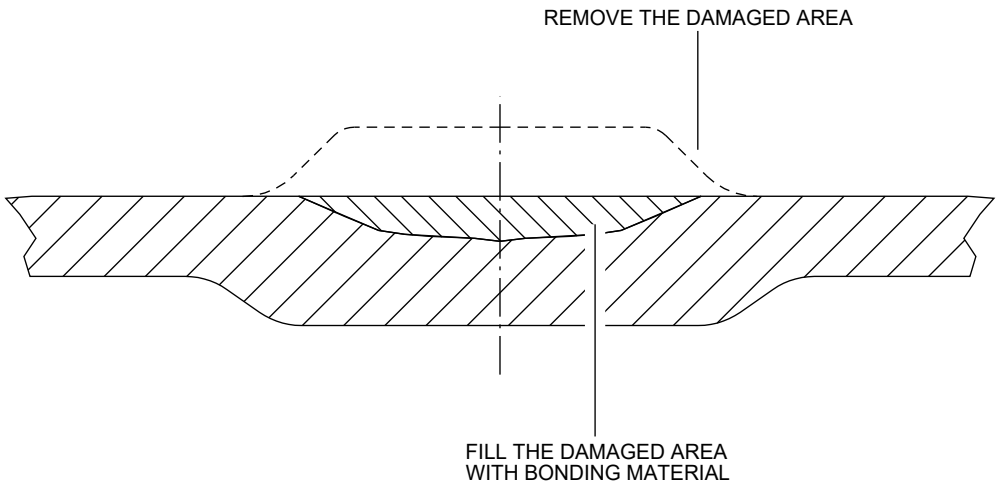

F_CM_254151_1_0170101_01_01

Damaged Area
Figure 6007/EN254151SHEET10170101

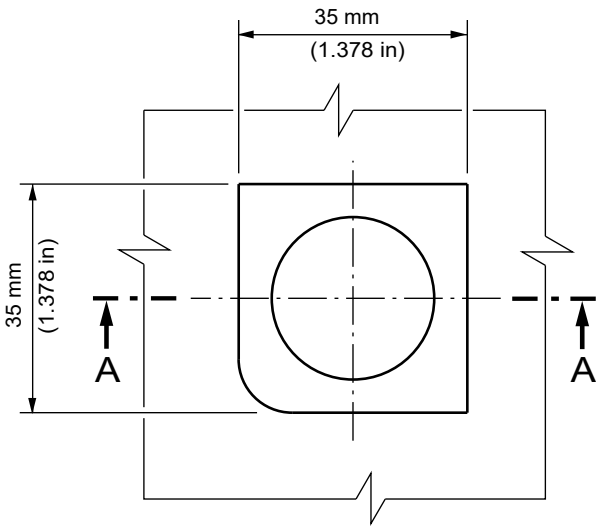

SECTION
A-A

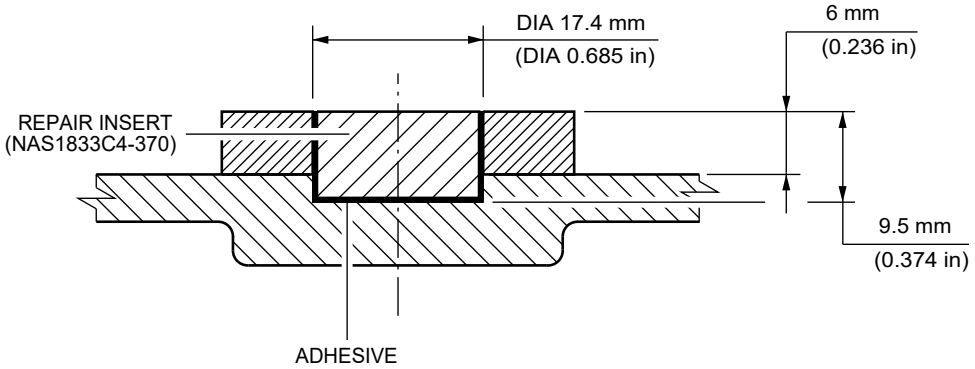

F_CM_254151_1_0180101_01_01

Floor Pan Surrounding Inserts
Figure 6008/EN254151SHEET10180101

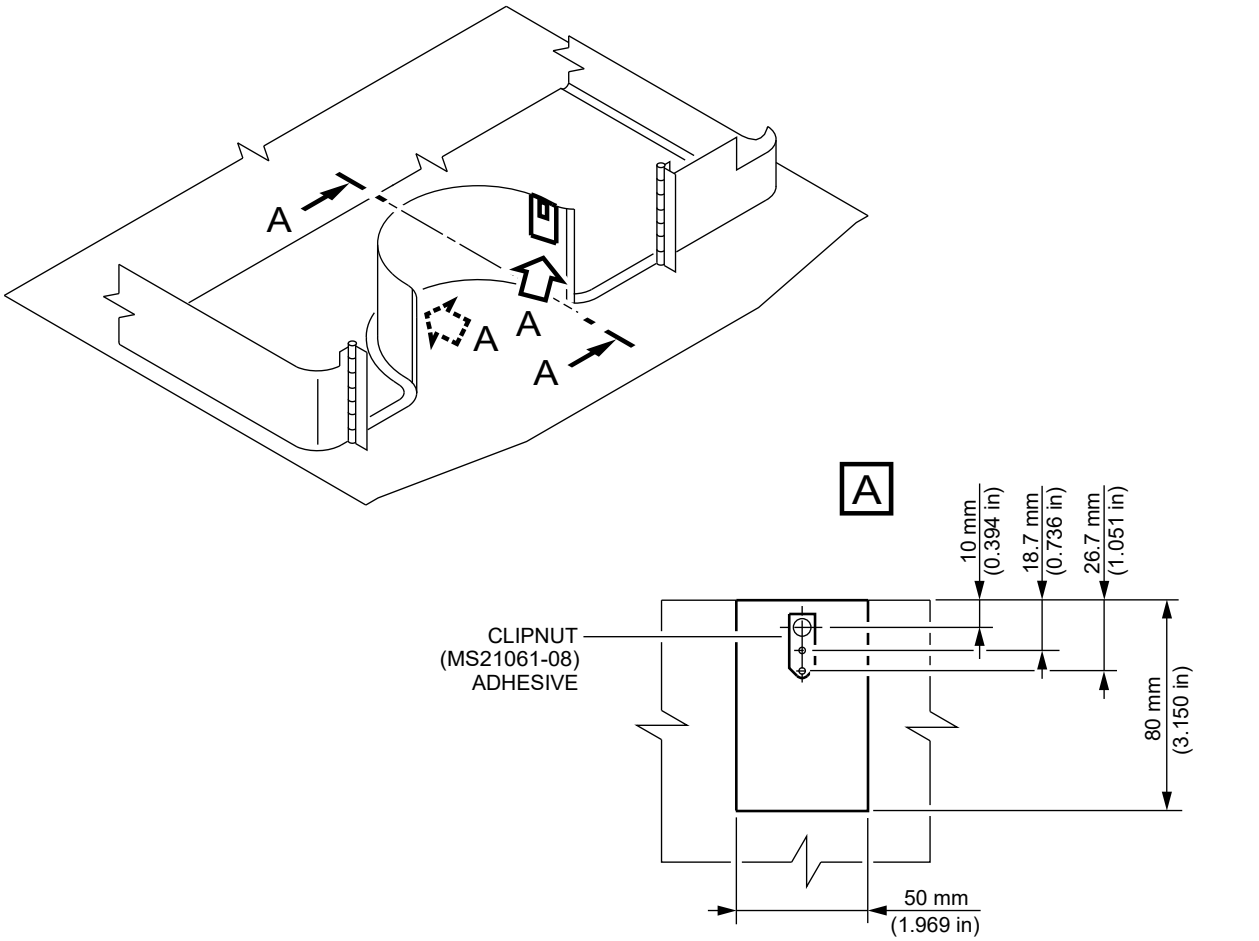

L_CM_254151_1_0470101_01_00

Repair of the Shroudfixation
Figure 6009/EN254151SHEET10470101

TASK 25-41-51-300-806-A01

4. Repair of the Defective Sealing Profiles

A. General

WARNING: **BE CAREFUL WHEN YOU USE SOLVENTS/CLEANING AGENTS, SEALANTS AND OTHER MATERIALS. OBEY THE MATERIAL MANUFACTURER'S INSTRUCTIONS AND THE LOCAL REGULATIONS. MAKE SURE THAT THERE IS A GOOD FLOW OF AIR THROUGH THE WORK AREA. DO NOT BREATHE THE FUMES. DO NOT SMOKE. DO NOT USE THESE MATERIALS NEAR A FLAME, SPARKS OR SOURCES OF HEAT. USE PROTECTIVE CLOTHING, GOGGLES AND GLOVES. IF YOU GET ONE OF THESE MATERIALS ON YOUR SKIN OR IN YOUR EYES, FLUSH IT AWAY WITH A FLOW OF CLEAN WATER. IF YOU GET ONE OF THESE MATERIALS IN YOUR MOUTH, GET IMMEDIATE MEDICAL AID. IN GENERAL, THESE MATERIALS ARE POISONOUS, FLAMMABLE AND SKIN IRRITANTS.**

CAUTION: **USE ONLY THE SPECIFIED MATERIALS. MATERIALS WHICH ARE NOT SPECIFIED, CAN CAUSE DAMAGE.**

NOTE: **For the repair procedure of the subcomponents refer to the supplier's manuals (refer to General).**

NOTE: **Do not use KETONE or ACETONE for the cleaning of these parts after the repair:**

-

- the floor pan,
- the service cabinet,
- the seat cover dispenser,
- the toilet shrouds with the supports,
- the air grids,
- all the parts made of poly carbonate.

- Cover these parts if you work with KETONE or ACETONE to prevent of moist. Use only ETHANOL (Material. No. 11-520) to clean the parts made of poly-carbonate.

(1) Replace these parts during the disassembly procedure:

(2)

- the screws of lower and upper attachments and all selflocking nuts,
- all the seals,
- all the bulbs and the fluorescent tubes.

(3) For the rivet replacement refer to the standard riveting procedure.

B. Job Set-up Information
(1) Consumable Materials

REFERENCE	DESIGNATION
11-010	Isopropyl Alcohol
08-026	Adhesive/Sealant one Part, RTV Silicone Rubber

Table 6009
Consumable Materials

C. Procedure

SUB TASK 25-41-51-350-014-A01

1. Repair of the Defective Sealing Profiles

(a) Remove the defective sealing profiles.

WARNING: **BE CAREFUL WHEN YOU USE MATERIAL NO. 11-010 ISOPROPYL ALCOHOL. OBEY THE MATERIAL MANUFACTURER'S INSTRUCTIONS.**

WARNING: **BE CAREFUL WHEN YOU USE MATERIAL NO. 08-026 ADHESIVE/SEALANT ONE PART, RTV SILICONE RUBBER. OBEY THE MATERIAL MANUFACTURER'S INSTRUCTIONS.**

(b) Clean the bonding area with the Material No. 11-010 Isopropyl Alcohol and bond the new sealing profile with the Material No. 08-026 Adhesive/Sealant one Part, RTV Silicone Rubber.

TASK 25-41-51-300-809-A01

5. Repair of the Plastic Washbasin

A. General

WARNING: **BE CAREFUL WHEN YOU USE SOLVENTS/CLEANING AGENTS, SEALANTS AND OTHER MATERIALS. OBEY THE MATERIAL MANUFACTURER'S INSTRUCTIONS AND THE LOCAL REGULATIONS. MAKE SURE THAT THERE IS A GOOD FLOW OF AIR THROUGH THE WORK AREA. DO NOT BREATHE THE FUMES. DO NOT SMOKE. DO NOT USE THESE MATERIALS NEAR A FLAME, SPARKS OR SOURCES OF HEAT. USE PROTECTIVE CLOTHING, GOGGLES AND GLOVES. IF YOU GET ONE OF THESE MATERIALS ON YOUR SKIN OR IN YOUR EYES, FLUSH IT AWAY WITH A FLOW OF CLEAN WATER. IF YOU GET ONE OF THESE MATERIALS IN YOUR MOUTH, GET IMMEDIATE MEDICAL AID. IN GENERAL, THESE MATERIALS ARE POISONOUS, FLAMMABLE AND SKIN IRRITANTS.**

CAUTION: **USE ONLY THE SPECIFIED MATERIALS. MATERIALS WHICH ARE NOT SPECIFIED, CAN CAUSE DAMAGE.**

NOTE: **For the repair procedure of the subcomponents refer to the supplier's manuals (refer to General).**

NOTE: **Do not use KETONE or ACETONE for the cleaning of these parts after the repair:**

-

- the floor pan,
- the service cabinet,
- the seat cover dispenser,
- the toilet shrouds with the supports,
- the air grids,
- all the parts made of poly carbonate.

- Cover these parts if you work with KETONE or ACETONE to prevent of moist. Use only ETHANOL (Material. No. 11-520) to clean the parts made of poly-carbonate.

(1) Replace these parts during the disassembly procedure:

(2)

- the screws of lower and upper attachments and all selflocking nuts,
- all the seals,
- all the bulbs and the fluorescent tubes.

(3) For the rivet replacement refer to the standard riveting procedure.

B. Job Set-up Information

(1) Consumable Materials

REFERENCE	DESIGNATION
19-011	Scotch Brite Pads
04-012	Pure Mineral Vaseline or Petro-Latum
08-103	Repair Kit for Washbasin

Table 6010
Consumable Materials

(2) Fixtures, Tools, Test and Support Equipment

REFERENCE	DESIGNATION
	abrasive paper

Table 6011
Fixtures, Tools, Test and Support Equipment

C. Procedure

SUB TASK 25-41-51-350-019-A01

1. Scratches

(a) Remove the scratches up to a depth of 0.3 mm (0.012 in.) with the abrasive paper. The grade of grain of the abrasive paper depends on the depth of the scratches. Use step by step the next higher grade of grain.

(b) Polish by making a rotating movement.

WARNING: BE CAREFUL WHEN YOU USE MATERIAL NO. 04-012 PURE MINERAL VASELINE OR PETRO-LATUM. OBEY THE MATERIAL MANUFACTURER'S INSTRUCTIONS.

(c) Use the Material No. 19-011 Scotch Brite Pads and the Material No. 04-012 Pure Mineral Vaseline or Petro-Latum to have the brightness of the undamaged areas for the working area.

WARNING: **BE CAREFUL WHEN YOU USE MATERIAL NO. 04-012 PURE MINERAL VASELINE OR PETRO-LATUM. OBEY THE MATERIAL MANUFACTURER'S INSTRUCTIONS.**

(d) Protect the surface with the Material No. 04-012 Pure Mineral Vaseline or Petro-Latum.

SUB TASK 25-41-51-350-020-A01

2. Cracks, Open Adhesive Joints, Burns

NOTE: **When ordering the repairing compound, state the sheet and/or the moulded piece number (red label) and the colour code (yellow label) and/or send in a sample of the sheet when possible. This information is necessary for align the colour in the factory. In the event that you will send the sample of the sheet, clean the unit and the sample by wet grinding them with the abrasive paper (400 grade of grain) and check them for colour sameness in a wet state at the same level.**

NOTE: **Temperature of material, repairing compound and adhesive min. 18° C (64.4° F)**

(a) Mill out the crack with 3 mm (0.118 in.) or 4 mm (0.157 in.) wide milling cutter (refer to Figure 6010, figure 610A). Open not easily accessible spots with a handmilling machine, make smooth with a chisel. We recommend to make one or several additional transverse grooves for the parts subject to high mechanical stresses. Put a reinforcement (e.g. M5 X 150 mm long threaded rod, M5 = min.0) into the bottom adhesive compound of the transverse groove to repair the longitudinal cracks (refer to Figure 6010, figure 610B).

- Put the adhesive into the groove
- Put in the reinforcement
- Put in the adhesive again

(c) Fill in the bottom of the groove amply with the matching coloured Material No. Material No. 08-103 Repair Kit for Washbasin adhesive (refer to Figure 6010, figure 610C). For the dosing quantity see. Fill the vertical joints section by section with the aid of pockets made of the adhesive tape or the clamps (refer to Figure 6010, figure 610D).

(d) Remove the ridge of the adhesive with a chisel, approximately 20 minutes after set. Depth 2 to 3 mm (0.078 to 0.118 in.), width a little bit wider than the groove (refer to Figure 6010, figure 610E). At not easily accessible spots, expose the groove with a sharp blade. Carefully scrape the edges of the groove. Make smooth the top edges of the groove with a fine sanding paper (grade of grain 180-240). Remove the loose remaining.

(e) Fill the remaining groove with the Material No. 08-103 Repair Kit for Washbasin repairing compound. For dosing quantity see. Ridge prevents colour faults caused by the reaction with the air humidity (refer to Figure 6010, figure 610F).

(f) Remove the air out of the repairing compound. Hit it or use a tooth pick for running all around the edges of the groove.

NOTE: In care of aquarell colours refer to Aquarell Colours.

(g) After hardening for min. 24 hours at min. 20° C (68° F), grind the ridge and match the gloss of the surface as given in Scratches.

SUB TASK 25-41-51-350-021-A01

3. Dosing Quantity

(a) Dosing quantity for the repairing compound

Panel colours	Adhesive A Repairing compound Material No. 08-103 Repair Kit for Washbasin	Hardener B Repairing compound Material No. 08-103 Repair Kit for Washbasin
All colours	30 ml (1.831 in³)	40 mm (1.575 in.)

Table 6012
Dosing Quantity

NOTE: The length of the tube hardener pressed from the tube is the measure for the dosing.

(c) Dosing quantity for the repairing compound

Panel colours	Repairing compound	Hardener B Repairing compound Material No. 08-103 Repair Kit for Washbasin
Plain colours	30 ml (1.831 in³)	35 mm (1.378 in.)
Granite decorative designs	30 ml (1.831 in³)	35 mm (1.378 in.)
Aquarell colours (see Note above)	30 ml (1.831 in³)	35 mm (1.378 in.)

Table 6013
Dosing Quantity

NOTE: **The length of the tube hardener pressed from the tube is the measure for the dosing.**

SUB TASK 25-41-51-350-022-A01

4. Aquarell Colours

   (a) Contrast colour is supplied with aquarell colours to match colours on site. Fill the groove with repairing compound without any contrast colours. Immediately afterwards, add a few drops of contrast colour to the repairing compound + Hardener B Material No. 08-103 Repair Kit for Washbasin mixture.

   (b) Mix the compound and restore marbling on site with a tooth pick.

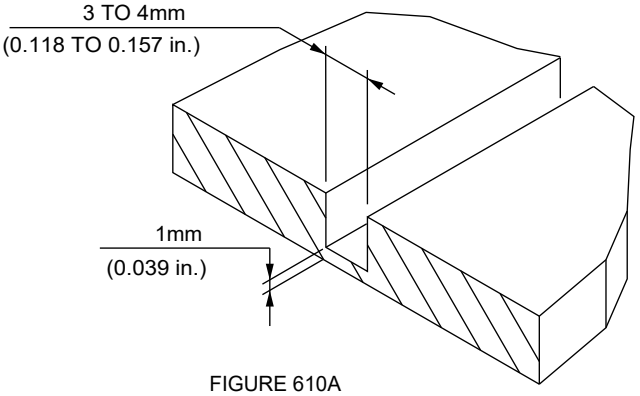

FIGURE 610A

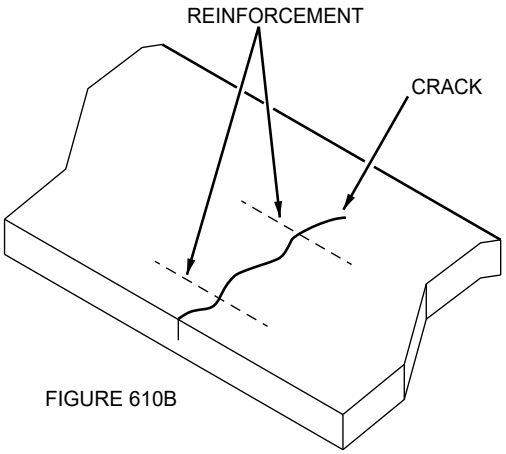

FIGURE 610B

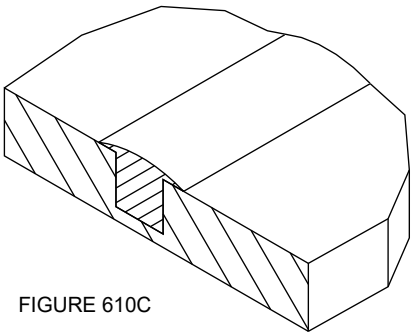

FIGURE 610C

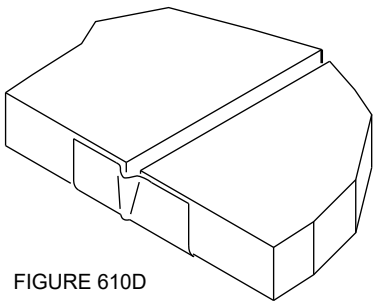

FIGURE 610D

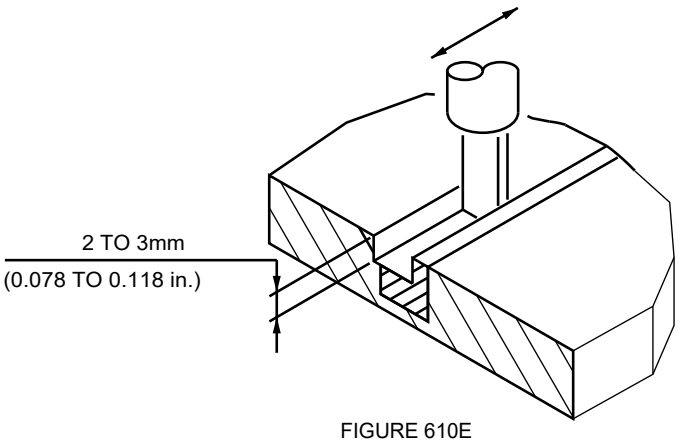

FIGURE 610E

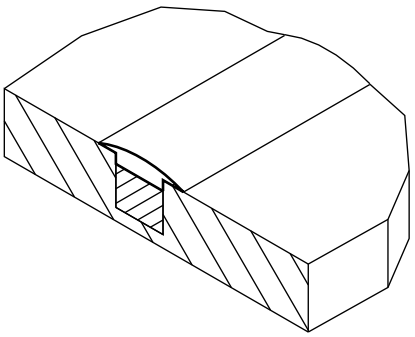

FIGURE 610F

F_CM_254151_1_0190101_01_00

Repair of the Plastic Washbasin
Figure 6010/EN254151SHEET10190101

TASK 25-41-51-300-813-A01

6. Repair of the Toilet Shroud Assembly

A. General

WARNING: **BE CAREFUL WHEN YOU USE SOLVENTS/CLEANING AGENTS, SEALANTS AND OTHER MATERIALS. OBEY THE MATERIAL MANUFACTURER'S INSTRUCTIONS AND THE LOCAL REGULATIONS. MAKE SURE THAT THERE IS A GOOD FLOW OF AIR THROUGH THE WORK AREA. DO NOT BREATHE THE FUMES. DO NOT SMOKE. DO NOT USE THESE MATERIALS NEAR A FLAME, SPARKS OR SOURCES OF HEAT. USE PROTECTIVE CLOTHING, GOGGLES AND GLOVES. IF YOU GET ONE OF THESE MATERIALS ON YOUR SKIN OR IN YOUR EYES, FLUSH IT AWAY WITH A FLOW OF CLEAN WATER. IF YOU GET ONE OF THESE MATERIALS IN YOUR MOUTH, GET IMMEDIATE MEDICAL AID. IN GENERAL, THESE MATERIALS ARE POISONOUS, FLAMMABLE AND SKIN IRRITANTS.**

CAUTION: **USE ONLY THE SPECIFIED MATERIALS. MATERIALS WHICH ARE NOT SPECIFIED, CAN CAUSE DAMAGE.**

NOTE: **For the repair procedure of the subcomponents refer to the supplier's manuals (refer to General).**

NOTE: **Do not use KETONE or ACETONE for the cleaning of these parts after the repair:**

- the floor pan,
- the service cabinet,
- the seat cover dispenser,
- the toilet shrouds with the supports,
- the air grids,
- all the parts made of poly carbonate.

(1) Replace these parts during the disassembly procedure:

(2)

- the screws of lower and upper attachments and all selflocking nuts,
- all the seals,
- all the bulbs and the fluorescent tubes.

(3) For the rivet replacement refer to the standard riveting procedure.

B. Job Set-up Information

(1) Consumable Materials

REFERENCE	DESIGNATION
	CLEANING AGENT ETHANOL (Material No. 11-520)
08-017	Bonding Metal/Metal
08-036	Polyester Filler
08-025	Two Component Polyurethane Adhesive
08-001	General Purpose Adhesive Honeycomb Filler
16-047	Decorative Paint (Internal Applic.)

Table 6014
Consumable Materials

(2) Fixtures, Tools, Test and Support Equipment

REFERENCE	DESIGNATION
	abrasive paper, 320-400 grade of grain

Table 6015
Fixtures, Tools, Test and Support Equipment

C. Procedure

SUB TASK 25-41-51-350-027-A01

1. Separation of the Ring Cover from the Toilet Shroud

(a) Remove the cracked ring cover from the toilet shroud.

NOTE: Heat up the joint to maximum temperature of 80 °C (176 °F) if required.

(b) Use the abrasive paper, 320-400 grade of grain, to remove the remaining adhesive.

(c) Clean the bonding area with the CLEANING AGENT ETHANOL (Material No. 11-520) .

SUB TASK 25-41-51-360-001-A01

2. Bonding of the Ring Cover to the Toilet Shroud

WARNING: **BE CAREFUL WHEN YOU USE MATERIAL NO. 08-017 BONDING METAL/METAL. OBEY THE MATERIAL MANUFACTURER'S INSTRUCTIONS.**

(a) Bond the ring cover to the toilet shroud with the Material No. 08-017 Bonding Metal/Metal.

NOTE: **Make sure that the both surfaces are placed correct, before you apply the adhesive.**

(b) Fill the visible areas with the Material No.Material No. 08-036 Polyester Filler.

(c) Smooth the bonding area with the abrasive paper, 320-400 grade of grain.

(d) Repaint the complete unit.

SUB TASK 25-41-51-350-028-A01

3. Cracks or Damages in the Toilet Shroud Assembly

NOTE: **Refer to Figure 6011.**

(a) Stop drill the ends of the crack.

(b) Remove the damage with a milling cutter and / or a drill.

(c) Clean the repair and smooth the area of stiffener with the abrasive paper, 320-400 grade of grain.

WARNING: **BE CAREFUL WHEN YOU USE MATERIAL NO. 08-025 TWO COMPONENT POLYURETHANE ADHESIVE. OBEY THE MATERIAL MANUFACTURER'S INSTRUCTIONS.**

(d) Fill the damaged area with the Material No. 08-025 Two Component Polyurethane Adhesive.

WARNING: **BE CAREFUL WHEN YOU USE MATERIAL NO. 08-025 TWO COMPONENT POLYURETHANE ADHESIVE. OBEY THE MATERIAL MANUFACTURER'S INSTRUCTIONS.**

(e) Let the Material No. 08-025 Two Component Polyurethane Adhesive cure for 1 hour.

WARNING: **BE CAREFUL WHEN YOU USE MATERIAL NO. 08-001 GENERAL PURPOSE ADHESIVE HONEYCOMB FILLER. OBEY THE MATERIAL MANUFACTURER'S INSTRUCTIONS.**

(f) Install 2 laminates made from GLASS FABRIC LN9169-8-4548-6 with LAMINATION RESIN and the Material No. 08-001 General Purpose Adhesive Honeycomb Filler on both sides of the shroud (refer to Figure 6012, figure 633).

WARNING: **BE CAREFUL WHEN YOU USE MATERIAL NO. 16-047 DECORATIVE PAINT (INTERNAL APPLIC.). OBEY THE MATERIAL MANUFACTURER'S INSTRUCTIONS.**

(g) If necessary, smooth the repair with abrasive paper, 320-400 grade of grain and apply a color layer of the Material No. 16-047 Decorative Paint (Internal Applic.).

SUB TASK 25-41-51-350-029-A01

4. Cracks or Damages in the Area of the Fixing Holes of the Cover

NOTE: **Refer to Figure 6011.**

(a) Stop drill the ends of the crack.

(b) Remove the damage with a milling cutter and / or a drill.

(c) Clean the repair.

WARNING: **BE CAREFUL WHEN YOU USE MATERIAL NO. 08-025 TWO COMPONENT POLYURETHANE ADHESIVE. OBEY THE MATERIAL MANUFACTURER'S INSTRUCTIONS.**

(d) Fill the damaged area with the Material No. 08-025 Two Component Polyurethane Adhesive.

WARNING: **BE CAREFUL WHEN YOU USE MATERIAL NO. 08-025 TWO COMPONENT POLYURETHANE ADHESIVE. OBEY THE MATERIAL MANUFACTURER'S INSTRUCTIONS.**

(e) Let the Material No. 08-025 Two Component Polyurethane Adhesive cure for 1 hour.

(f) Make a stiffener from a laminate cloth plate LN40606B020 or similar (refer to Figure 6012, figure 634).

WARNING: **BE CAREFUL WHEN YOU USE MATERIAL NO. 08-025 TWO COMPONENT POLYURETHANE ADHESIVE. OBEY THE MATERIAL MANUFACTURER'S INSTRUCTIONS.**

(g) Bond the stiffener to the repair area from the rear / back side with the Material No. 08-025 Two Component Polyurethane Adhesive.

WARNING: **BE CAREFUL WHEN YOU USE MATERIAL NO. 16-047 DECORATIVE PAINT (INTERNAL APPLIC.). OBEY THE MATERIAL MANUFACTURER'S INSTRUCTIONS.**

(h) If necessary, smooth the repair with abrasive paper, 320-400 grade of grain and apply a color layer of the Material No. 16-047 Decorative Paint (Internal Applic.).

(i) Drill new holes diameter 10 mm (0.394 in.) for the installation of the toilet cover.

SUB TASK 25-41-51-350-030-A01

5. Cracks or Damages in the Area of the Lower Attachment Holes

NOTE: **Refer to Figure 6011.**

(a) Stop drill the ends of the crack.

(b) Remove the damage with a milling cutter and / or a drill.

(c) Clean the repair and smooth the area of stiffener with the abrasive paper, 320-400 grade of grain.

WARNING: **BE CAREFUL WHEN YOU USE MATERIAL NO. 08-025 TWO COMPONENT POLYURETHANE ADHESIVE. OBEY THE MATERIAL MANUFACTURER'S INSTRUCTIONS.**

(d) Fill the damaged area and the existing hole with the Material No. 08-025 Two Component Polyurethane Adhesive.

WARNING: **BE CAREFUL WHEN YOU USE MATERIAL NO. 08-025 TWO COMPONENT POLYURETHANE ADHESIVE. OBEY THE MATERIAL MANUFACTURER'S INSTRUCTIONS.**

(e) Let the Material No. 08-025 Two Component Polyurethane Adhesive cure for 1 hour.

WARNING: **BE CAREFUL WHEN YOU USE MATERIAL NO. 08-001 GENERAL PURPOSE ADHESIVE HONEYCOMB FILLER. OBEY THE MATERIAL MANUFACTURER'S INSTRUCTIONS.**

(f) Install 2 laminates made from GLASS FABRIC LN9169-8-4548-6 with the Material No. 08-001 General Purpose Adhesive Honeycomb Filler on both sides of the shroud (refer to Figure 6012, figure 633).

WARNING: **BE CAREFUL WHEN YOU USE MATERIAL NO. 08-025 TWO COMPONENT POLYURETHANE ADHESIVE. OBEY THE MATERIAL MANUFACTURER'S INSTRUCTIONS.**

(g) Drill a new countersunk hole and bond a washer P/N NAS1169DD8 to it with the Material No. 08-025 Two Component Polyurethane Adhesive (refer to Figure 6012, figure 635) (SECTION A-A).

WARNING: **BE CAREFUL WHEN YOU USE MATERIAL NO. 16-047 DECORATIVE PAINT (INTERNAL APPLIC.). OBEY THE MATERIAL MANUFACTURER'S INSTRUCTIONS.**

(h) If necessary, smooth the repair with abrasive paper, 320-400 grade of grain and apply a color layer of the Material No. 16-047 Decorative Paint (Internal Applic.).

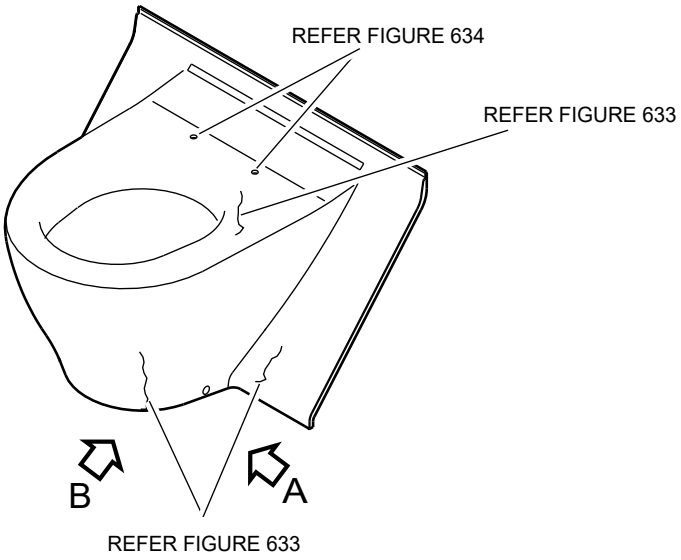

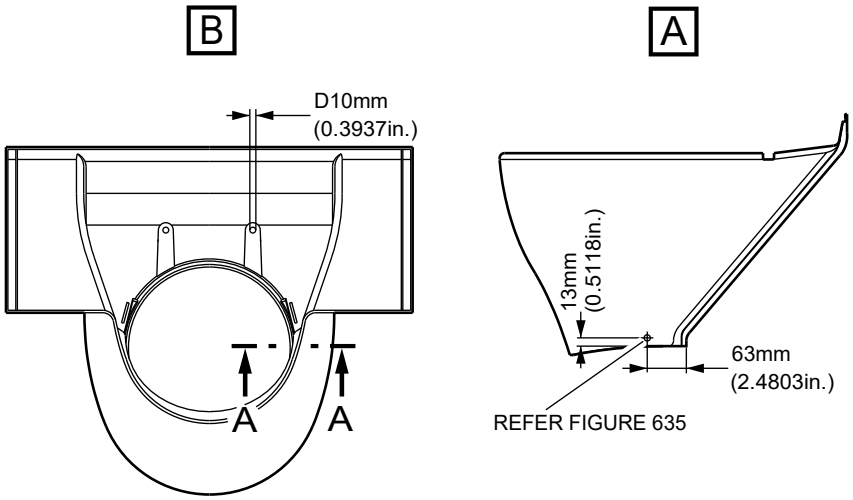

F_CM_254151_1_0210101_01_00

Repair of the Toilet Shroud Assembly
Figure 6011/EN254151SHEET10210101

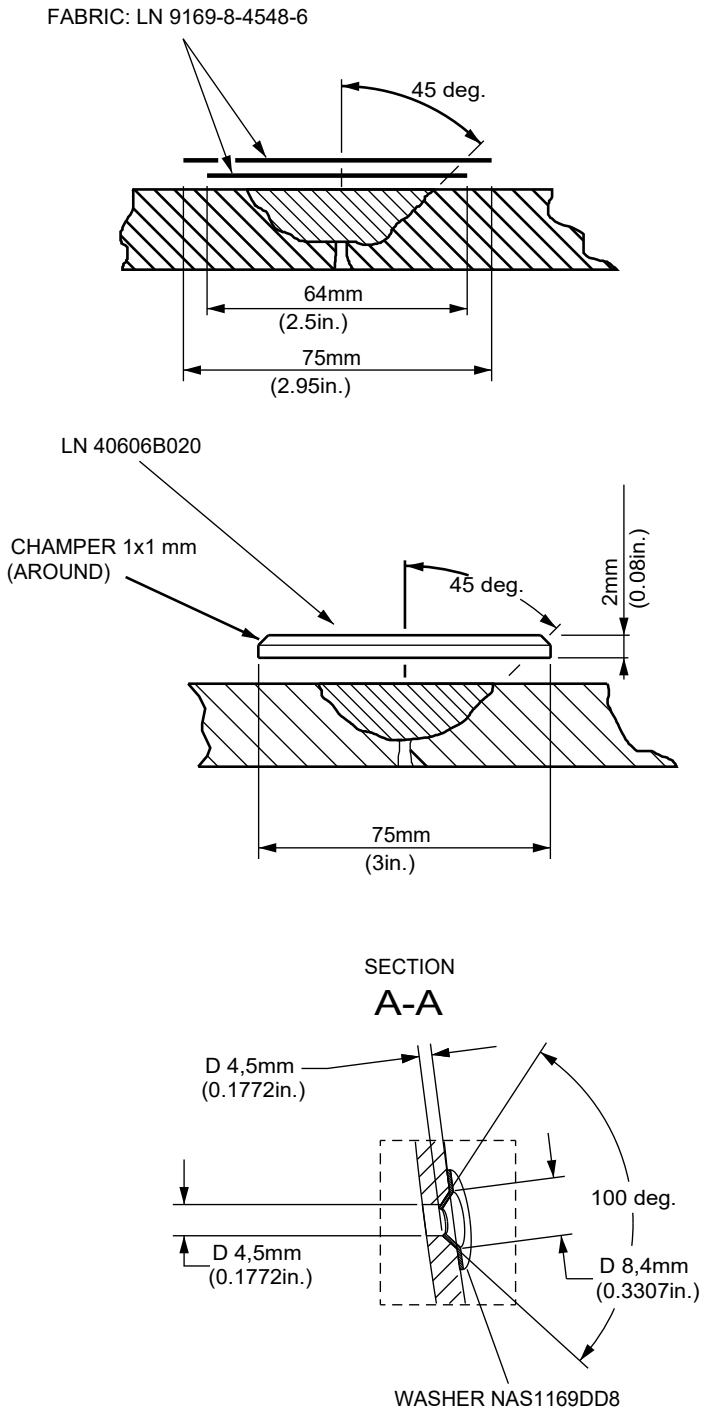

F_CM_254151_1_0220101_01_00

Repair of the Toilet Shroud Assembly
Figure 6012/EN254151SHEET10220101

TASK 25-41-51-300-814-A01

7. Repair of the Lower Attachment of the Aluminium Lavatory Walls

A. General

WARNING: **BE CAREFUL WHEN YOU USE SOLVENTS/CLEANING AGENTS, SEALANTS AND OTHER MATERIALS. OBEY THE MATERIAL MANUFACTURER'S INSTRUCTIONS AND THE LOCAL REGULATIONS. MAKE SURE THAT THERE IS A GOOD FLOW OF AIR THROUGH THE WORK AREA. DO NOT BREATHE THE FUMES. DO NOT SMOKE. DO NOT USE THESE MATERIALS NEAR A FLAME, SPARKS OR SOURCES OF HEAT. USE PROTECTIVE CLOTHING, GOGGLES AND GLOVES. IF YOU GET ONE OF THESE MATERIALS ON YOUR SKIN OR IN YOUR EYES, FLUSH IT AWAY WITH A FLOW OF CLEAN WATER. IF YOU GET ONE OF THESE MATERIALS IN YOUR MOUTH, GET IMMEDIATE MEDICAL AID. IN GENERAL, THESE MATERIALS ARE POISONOUS, FLAMMABLE AND SKIN IRRITANTS.**

CAUTION: **USE ONLY THE SPECIFIED MATERIALS. MATERIALS WHICH ARE NOT SPECIFIED, CAN CAUSE DAMAGE.**

NOTE: **For the repair procedure of the subcomponents refer to the supplier's manuals (refer to General).**

NOTE: **Do not use KETONE or ACETONE for the cleaning of these parts after the repair:**

-

- the floor pan,
- the service cabinet,
- the seat cover dispenser,
- the toilet shrouds with the supports,
- the air grids,
- all the parts made of poly carbonate.

- Cover these parts if you work with KETONE or ACETONE to prevent of moist. Use only ETHANOL (Material. No. 11-520) to clean the parts made of poly-carbonate.

(1) Replace these parts during the disassembly procedure:

(2)

- the screws of lower and upper attachments and all selflocking nuts,
- all the seals,
- all the bulbs and the fluorescent tubes.

(3) For the rivet replacement refer to the standard riveting procedure.

B. Job Set-up Information
(1) Repair Material List

RE-FER-ENCE	DESIGNATION	QTY	MATERIAL/REMARKS
1	covering PN A2 25491004-216		
2	covering PN A2 25491004-214		
3	covering PN A2 25491004-204		
4	covering PN A2 25491004-202		
5	stiffening PN A2 25491004-228		
6	stiffening PN A2 25491004-226		
7	laminated plastic PN A2 25491004-228		
8	covering PN A2 25491004-220		
9	covering PN A2 25491004-218		
10	covering PN A2 25491004-224		
11	covering PN A2 25491004-222		
12	stiffening PN A2 25491004-208		

Table 6016
Repair Material List

13	stiffening PN A2 25491004-206		
14	laminated plastic PN A2 25491004-210		
15	laminated plastic PN A2 25491004-242		
16	laminated plastic PN A2 25491004-230		
17	honeycomb core (Aluminium)		

Table 6016
Repair Material List

(2) Consumable Materials

REFERENCE	DESIGNATION
19-003	Lint-Free Cotton Cloth
08-017	Bonding Metal/Metal
	Cleaning agent (11-583)

Table 6017
Consumable Materials

(3) Fixtures, Tools, Test and Support Equipment

REFERENCE	DESIGNATION
	abrasive paper, 320-340 grade of grain

Table 6018
Fixtures, Tools, Test and Support Equipment

C. Procedure

SUB TASK 25-41-51-350-031-A01

1. Repair of the Damage Bracket Without Core Damages (06-1)

NOTE: **Brackets with damages or corrosion less than 250 mm (9.843 in.) remain installed.**

NOTE: **Max. dimensions of corroded honeycomb core (refer to Figure 6013). Is this more, than the complete wall has to be changed.**

NOTE: **Work only on the inner side of the lavatory wall.**

(a) Remove the stiffening (Aluminium sheet), the covering (Aluminium sheet) and the corroded ALU-bracket. Prepare cut out for the new brackets (refer to Figure 6014, figure 613).

(b) Remove and reuse the screws (30, 31, 33, 35) and the fittings (20, 21, 25) (refer to IPL_FIGURE_06).

(c) Make the repair section rough with the abrasive paper, 320-340 grade of grain

(d) Clean the repair area with the Cleaning agent (11-583) and Material No. 19-003 Lint-Free Cotton Cloth .

NOTE: **Check the lavatory wall and the core for damages. If the core is damaged repair per Repair of the Corroded Honeycomb Core and of the Damaged Brackets (06-1) .**

(e) Check the inserts (refer to Figure 6015) and replace it if necessary. Drill holes 14.3 mm (0.563 in.) and deep 9.5 mm (0.374 in.). Take location from the existing inserts.

NOTE: **For the vendor codes and the optional numbers see the corresponding IPL_figure_06.**

WARNING: **BE CAREFUL WHEN YOU USE MATERIAL NO. 08-017 BONDING METAL/METAL. OBEY THE MATERIAL MANUFACTURER'S INSTRUCTIONS.**

(f) Install the new brackets (13) and the new bracket (17) with the Material No. 08-017 Bonding Metal/Metal. Fill the core around the new bracket approximately 20 mm (0.787 in.).

WARNING: **BE CAREFUL WHEN YOU USE MATERIAL NO. 08-017 BONDING METAL/METAL. OBEY THE MATERIAL MANUFACTURER'S INSTRUCTIONS.**

(g) Install the inside and the outside covering (refer to Figure 6014, Figure 6018 and Table 601) with the Material No. 08-017 Bonding Metal/Metal.

NOTE: **For the change of one or two brackets take the inside and the outside covering of the appropriate size (refer to Figure 6018).**

WARNING: **BE CAREFUL WHEN YOU USE MATERIAL NO. 08-017 BONDING METAL/METAL. OBEY THE MATERIAL MANUFACTURER'S INSTRUCTIONS.**

(h) Install the inside and the outside stiffening (refer to Figure 6014, Figure 6021 and Table 601) with the Material No. 08-017 Bonding Metal/Metal.

NOTE: **For the change of one or two brackets take the inside and the outside stiffening of the appropriate size (refer to Figure 6019).**

(i) Install the fittings (20, 21, 25) with the screws (30, 31, 33, 35) (refer to IPL_FIGURE_06).

WARNING: **BE CAREFUL WHEN YOU USE MATERIAL NO. 08-017 BONDING METAL/METAL. OBEY THE MATERIAL MANUFACTURER'S INSTRUCTIONS.**

(j) Align the laminated plastic (refer to Table 601 Item 15) and install it with the Material No. 08-017 Bonding Metal/Metal on the bottom of the wall.

(k) Smooth the repair area with the abrasive paper, 320-340 grade of grain.

(l) Install the decor film.

SUB TASK 25-41-51-350-032-A01

2. Repair of the Corroded Honeycomb Core and of the Damaged Brackets (06-1)

NOTE: **Brackets with damages or corrosion less than 250 mm (9.843 in.) remain installed.**

NOTE: **Max. dimensions of corroded honeycomb core (refer to Figure 6013). Is this more, than the complete wall has to be change.**

NOTE: **The corroded area of the damaged wall must not exceed more than 400 mm (15.748 in.). If this area is higher than 400 mm (15.748 in.) change the complete wall (refer to Figure 6022).**

(a) Remove the stiffening (Aluminum sheet), the covering (Aluminum sheet) and the corroded ALU-bracket of the damaged area from both sides of the lavatory wall.

(b) Remove and reuse the screws (30, 31, 33, 35) and the fittings (20, 21, 25).

(c) Remove the damaged honeycomb core, (refer to Figure 6016 figure 616 for the appropriate size).

(d) Make the repair section rough with the abrasive paper, 320-340 grade of grain.

(e) Clean the repair area with the Cleaning agent (11-583)and a Material No. 19-003 Lint-Free Cotton Cloth .

(f) Check the inserts (refer to Figure 6017) and replace it if necessary. Drill holes 14.3 mm (0.563 in.) and deep 9.5 mm (0.374 in.). Take location from the existing inserts.

NOTE: For the vendor codes and the optional numbers see the corresponding IPL_figure_06.

WARNING: BE CAREFUL WHEN YOU USE MATERIAL NO. 08-017 BONDING METAL/METAL. OBEY THE MATERIAL MANUFACTURER'S INSTRUCTIONS.

(g) Align and install the new honeycomb core with the cut out for the new bracket with Material No. 08-017 Bonding Metal/Metal. Fill the core dividing area with Material No. 08-017 Bonding Metal/Metal , width 20 mm (0.787 in.).

WARNING: BE CAREFUL WHEN YOU USE MATERIAL NO. 08-017 BONDING METAL/METAL. OBEY THE MATERIAL MANUFACTURER'S INSTRUCTIONS.

(h) Install the new brackets (13) and the new bracket (17) with the Material No. 08-017 Bonding Metal/Metal. Fill the core around the new bracket approximately 20 mm (0.787 in.).

WARNING: BE CAREFUL WHEN YOU USE MATERIAL NO. 08-017 BONDING METAL/METAL. OBEY THE MATERIAL MANUFACTURER'S INSTRUCTIONS.

(i) Install the inside covering (refer to Figure 6016, Figure 6020 and Table 601) with the Material No. 08-017 Bonding Metal/Metal.

NOTE: For the change of one or two brackets take the inside covering of the appropriate size (refer to Figure 6020).

WARNING: **BE CAREFUL WHEN YOU USE MATERIAL NO. 08-017 BONDING METAL/METAL. OBEY THE MATERIAL MANUFACTURER'S INSTRUCTIONS.**

(j) Install the outside covering (refer to Figure 6016, Figure 6020 and Table 601) with the Material No. 08-017 Bonding Metal/Metal.

NOTE: **For the change of one or two brackets take the outside covering of the appropriate size (refer to Figure 6020).**

WARNING: **BE CAREFUL WHEN YOU USE MATERIAL NO. 08-017 BONDING METAL/METAL. OBEY THE MATERIAL MANUFACTURER'S INSTRUCTIONS.**

(k) Install the inside covering (refer to Figure 6016, Figure 6021 and Table 601) with the Material No. 08-017 Bonding Metal/Metal.

NOTE: **For the change of one or two brackets take the outside covering of the appropriate size (refer to Figure 6021).**

(l) Install the fittings (20, 30) with the screws (40) (refer to IPL_FIGURE_06).

WARNING: **BE CAREFUL WHEN YOU USE MATERIAL NO. 08-017 BONDING METAL/METAL. OBEY THE MATERIAL MANUFACTURER'S INSTRUCTIONS.**

(m) Align the laminated plastic (refer to Table 601, Item 15) and install it with the Material No. 08-017 Bonding Metal/Metal on the bottom of the wall.

(n) Smooth the repair area with the abrasive paper, 320-340 grade of grain.

(o) Install the decor film.

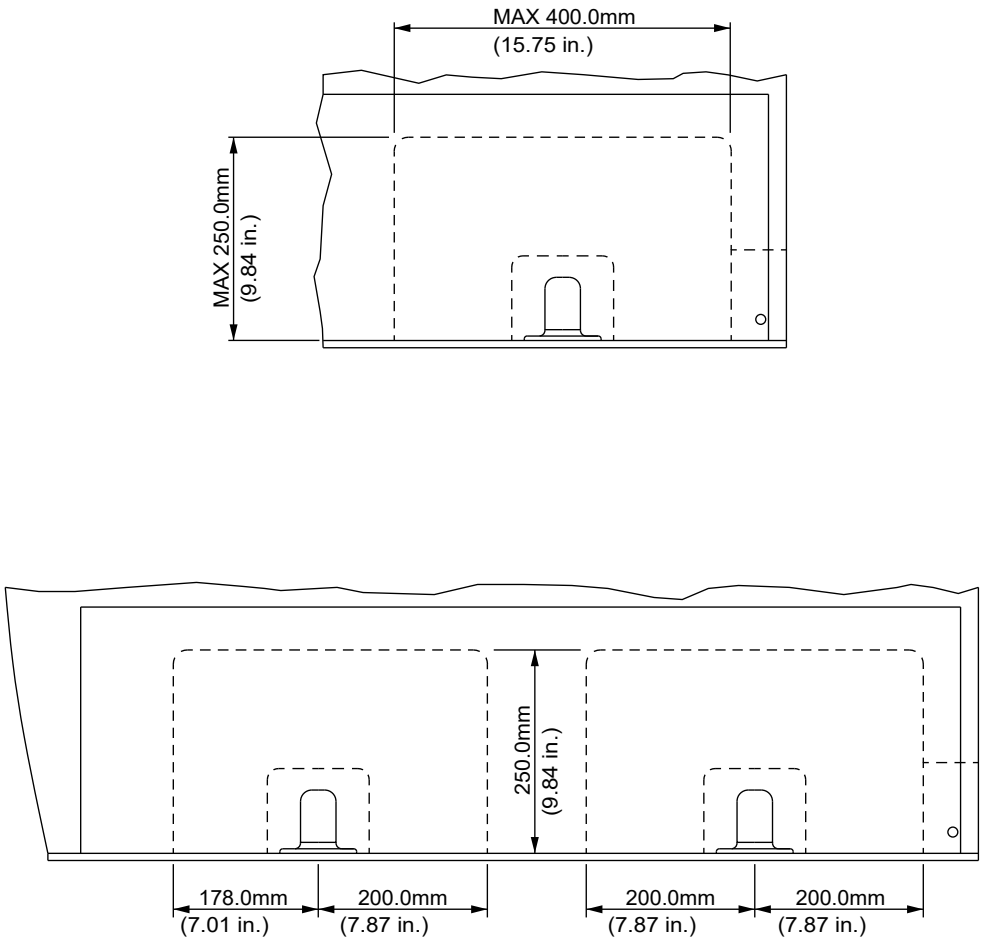

F_CM_254151_1_0230101_01_00

Repair of the Lower Attachments of the Aluminium Lavatory Walls
Figure 6013/EN254151SHEET10230101

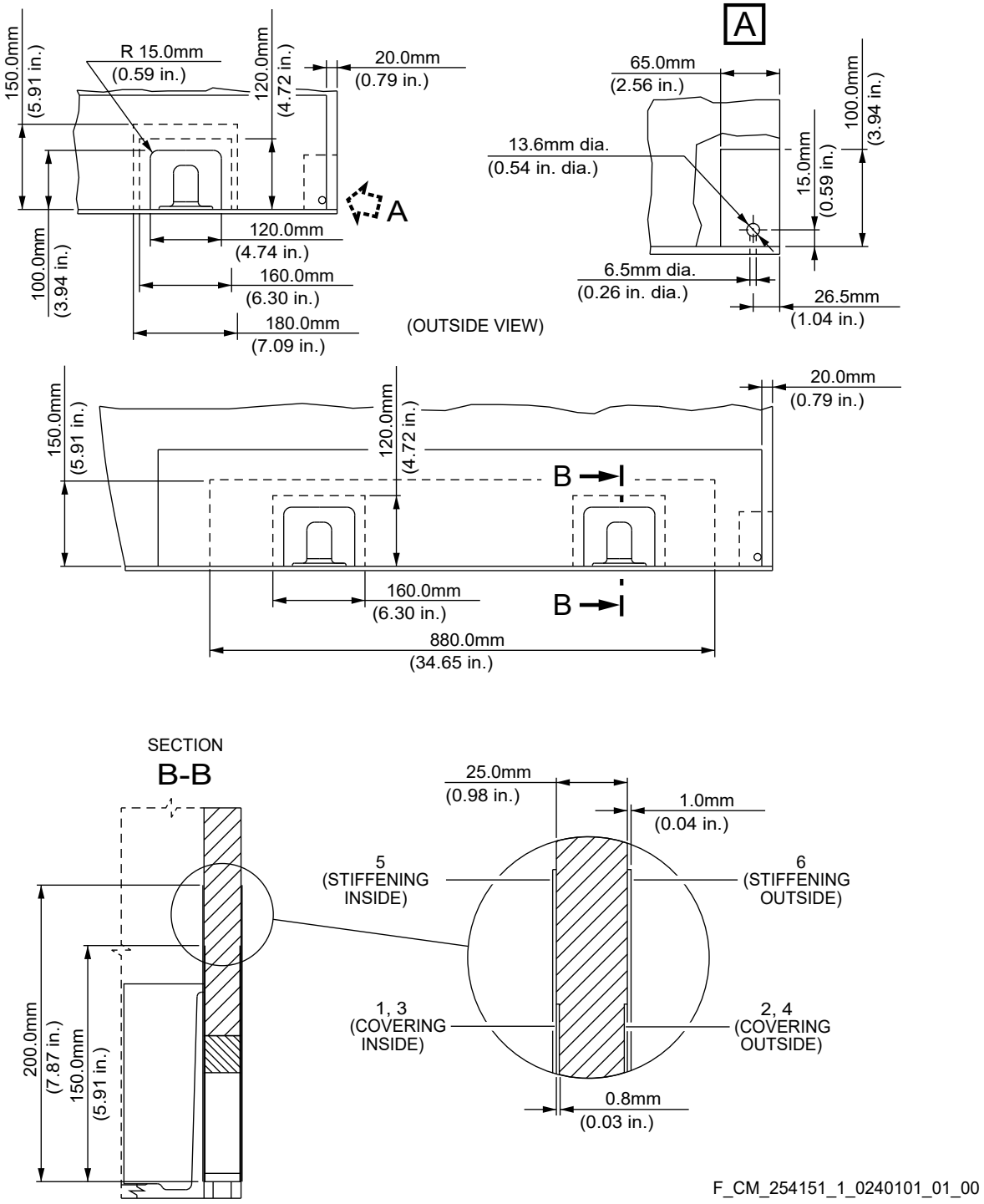

Repair of the Damaged Brackets Without Core Damages
Figure 6014/EN254151SHEET10240101

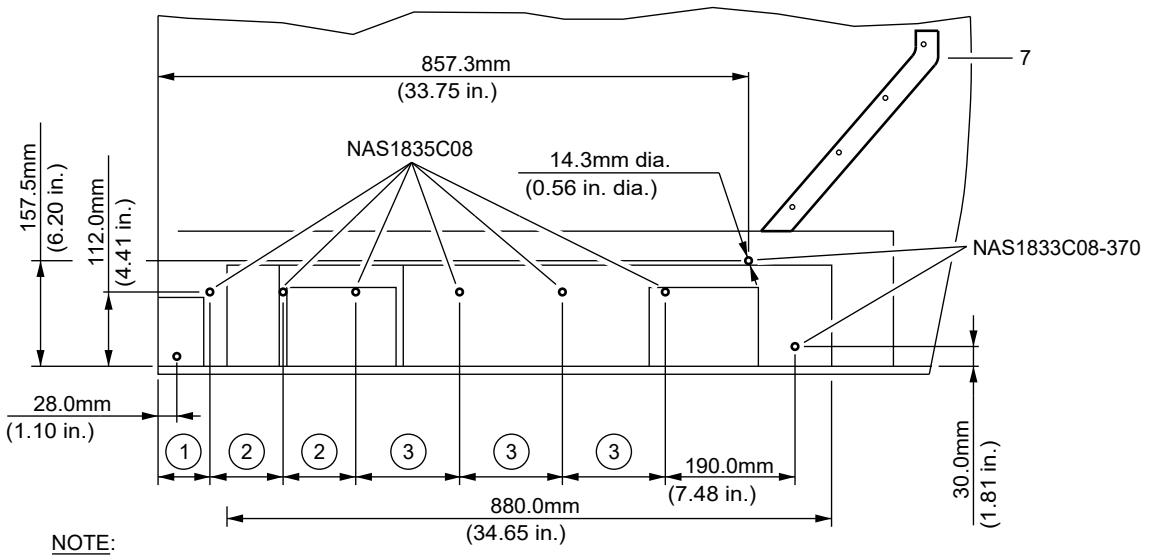

F_CM_254151_1_0250101_01_00

Repair of the Damaged Brackets Without Core Damages
Figure 6015/EN254151SHEET10250101

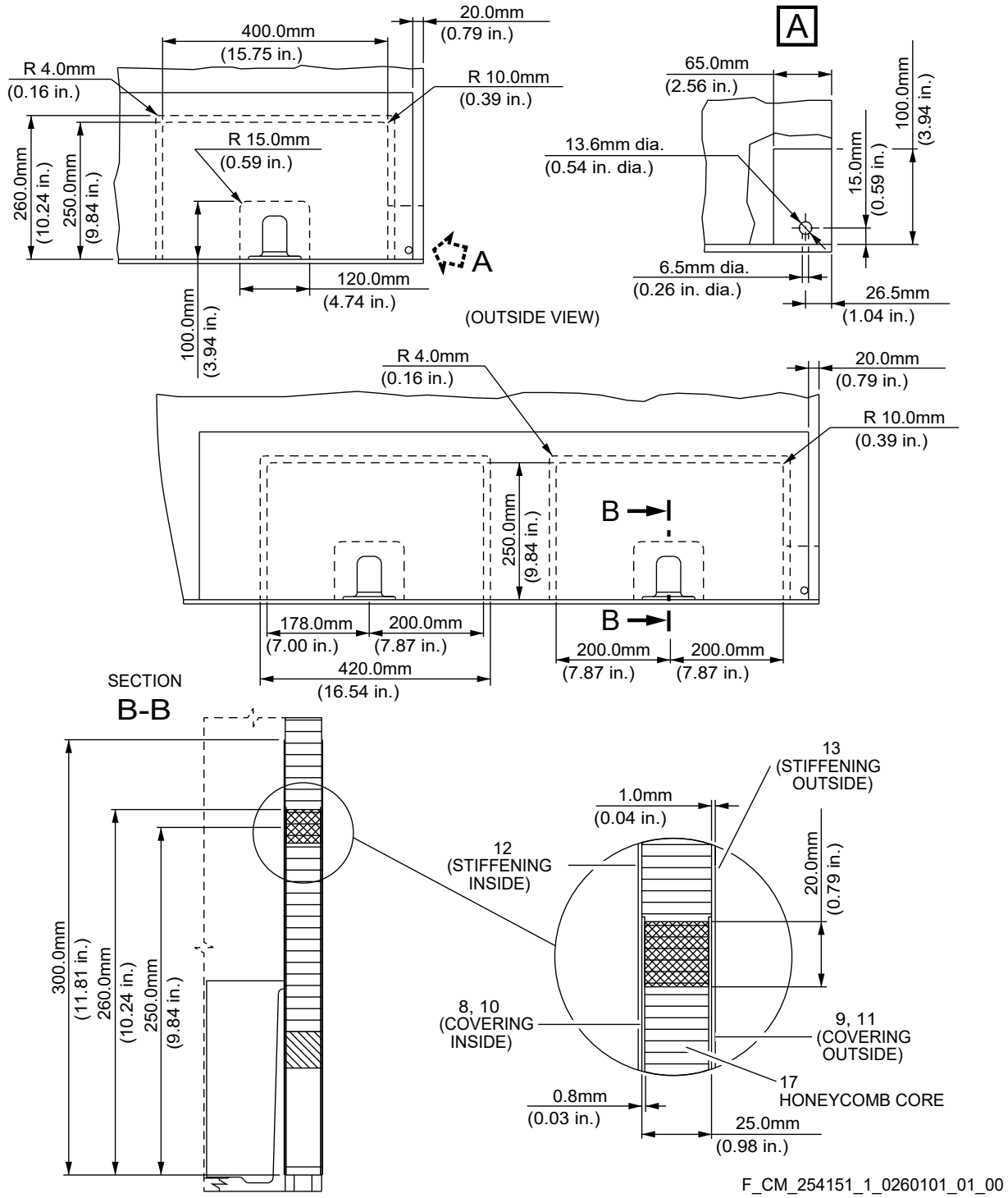

Repair of the Corroded Honeycomb Core and of the Damaged Brackets
Figure 6016/EN254151SHEET10260101

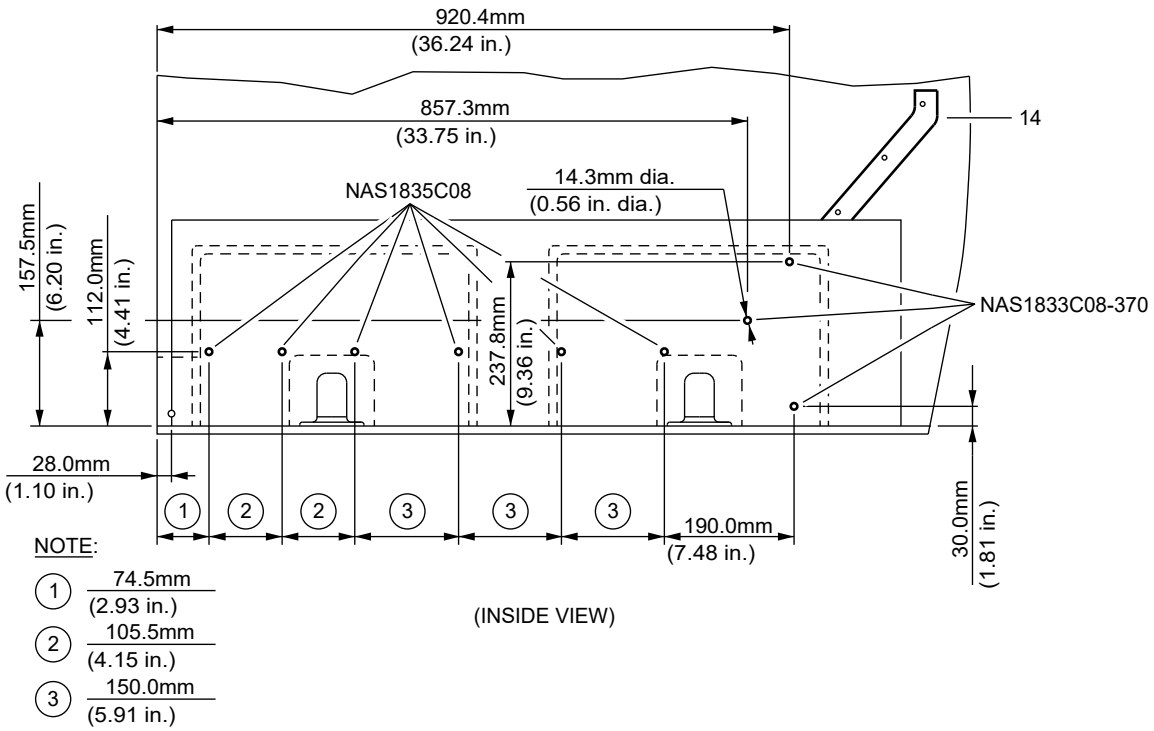

F_CM_254151_1_0270101_01_00

Repair of the Corroded Honeycomb Core and of the Damaged Brackets
Figure 6017/EN254151SHEET10270101

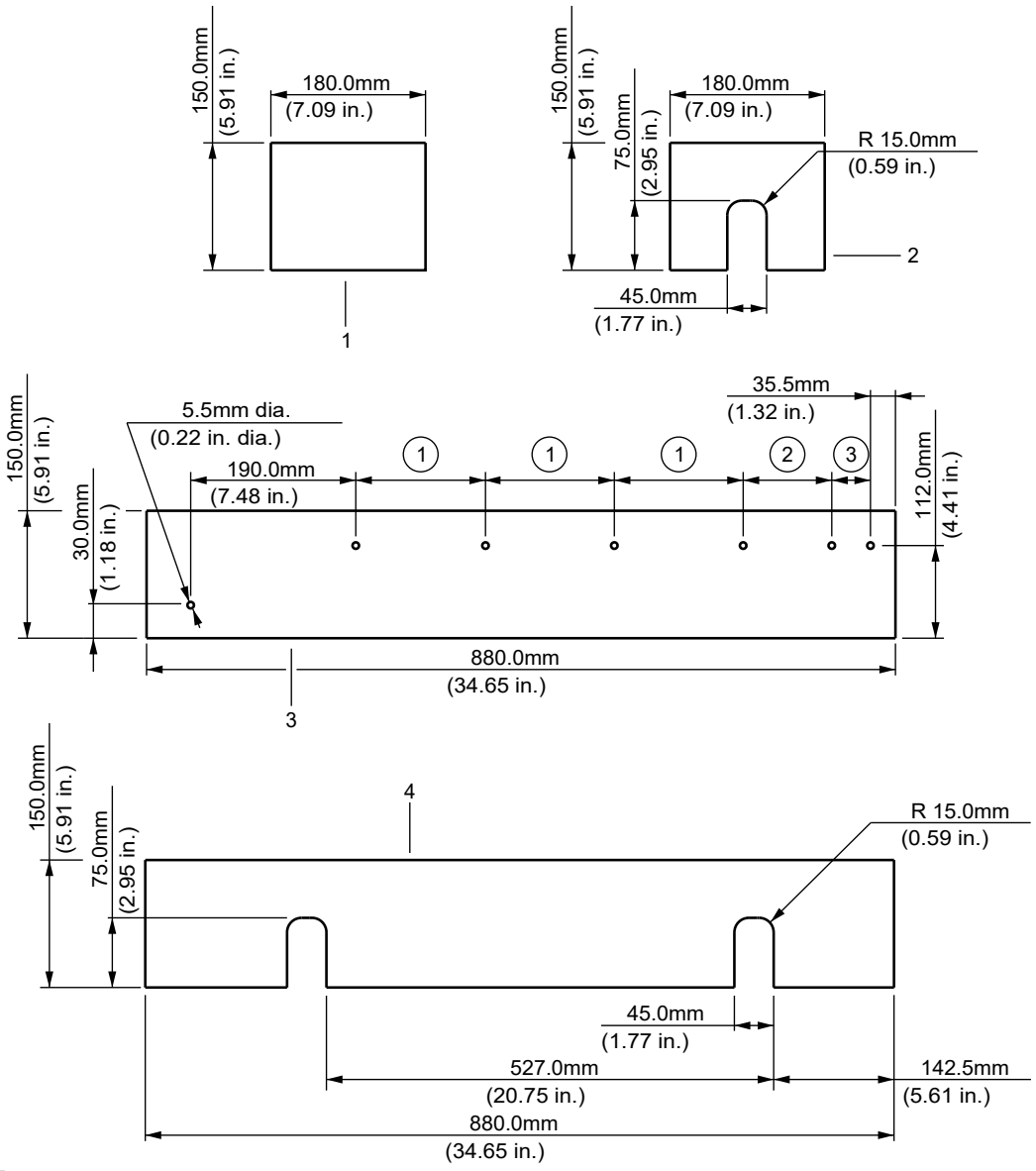

NOTE:

(1) 150.0mm (5.91 in.)

(2) 105.5mm (4.15 in.)

(3) 44.5mm (1.75 in.)

F_CM_254151_1_0280101_01_00

Repair of the Damaged Brackets Without Core Damages
Figure 6018/EN254151SHEET10280101

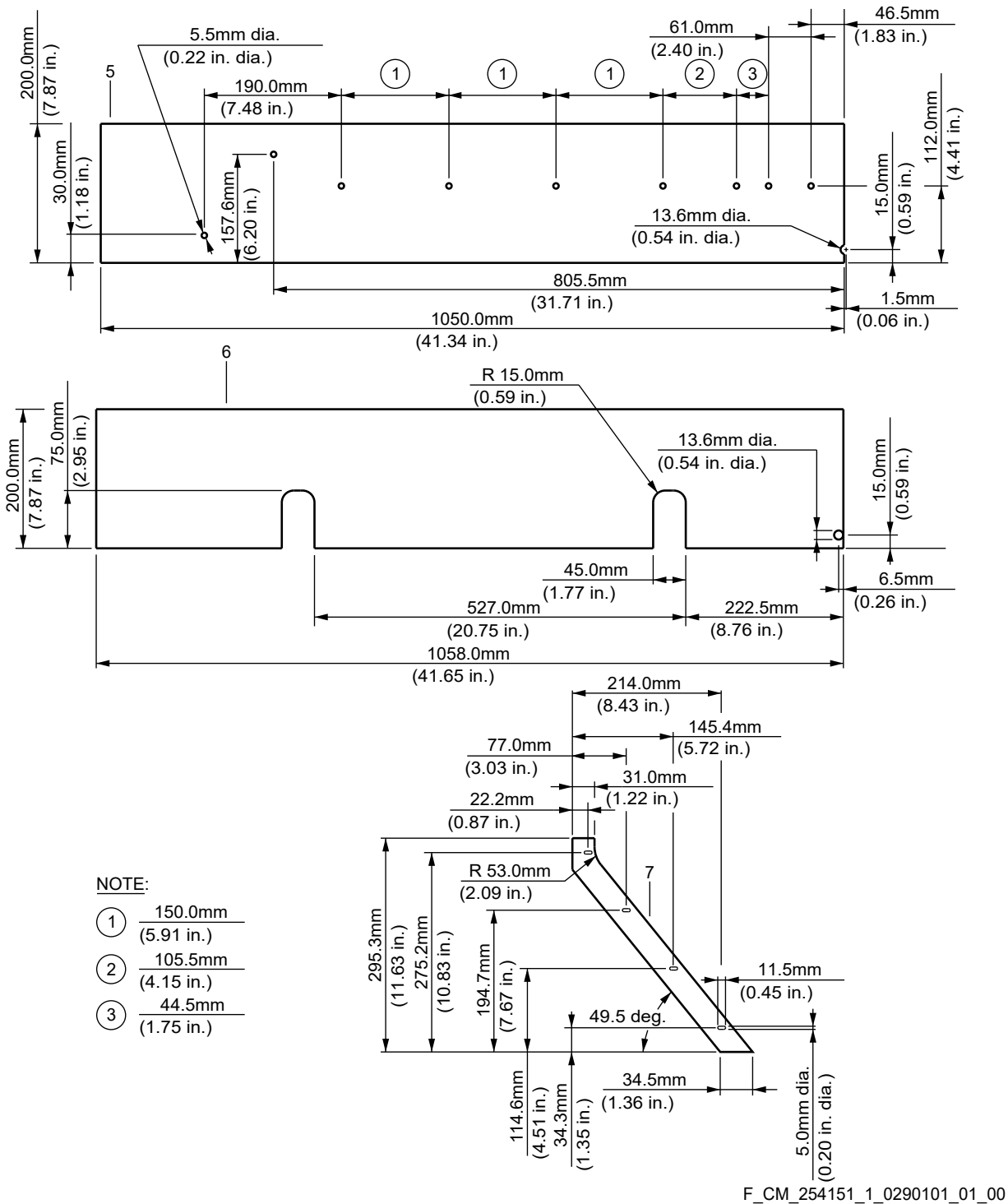

NOTE:

1. 150.0mm (5.91 in.)
2. 105.5mm (4.15 in.)
3. 44.5mm (1.75 in.)

F_CM_254151_1_0290101_01_00

Repair of the Damaged Brackets Without Core Damages
Figure 6019/EN254151SHEET10290101

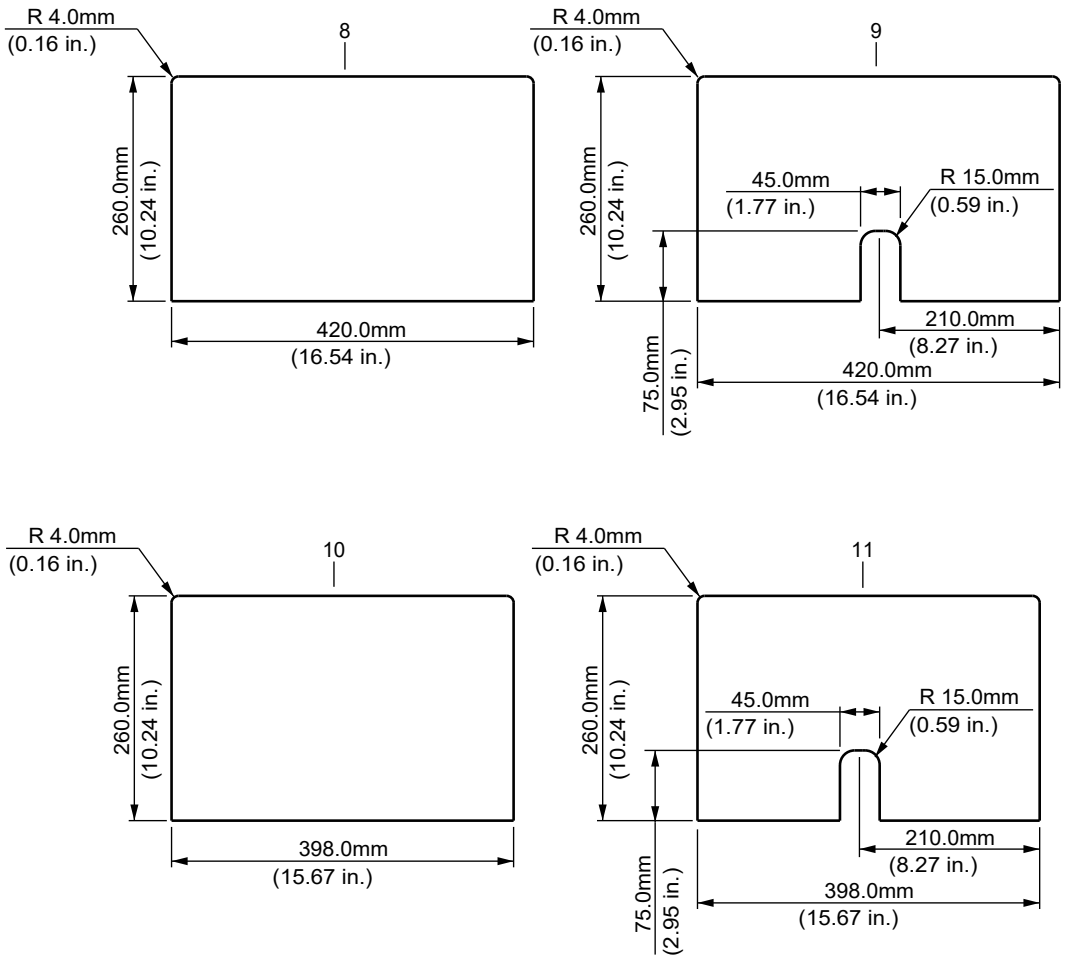

F_CM_254151_1_0300101_01_00

Repair of the Corroded Honeycomb Core and of the Damaged Brackets
Figure 6020/EN254151SHEET10300101

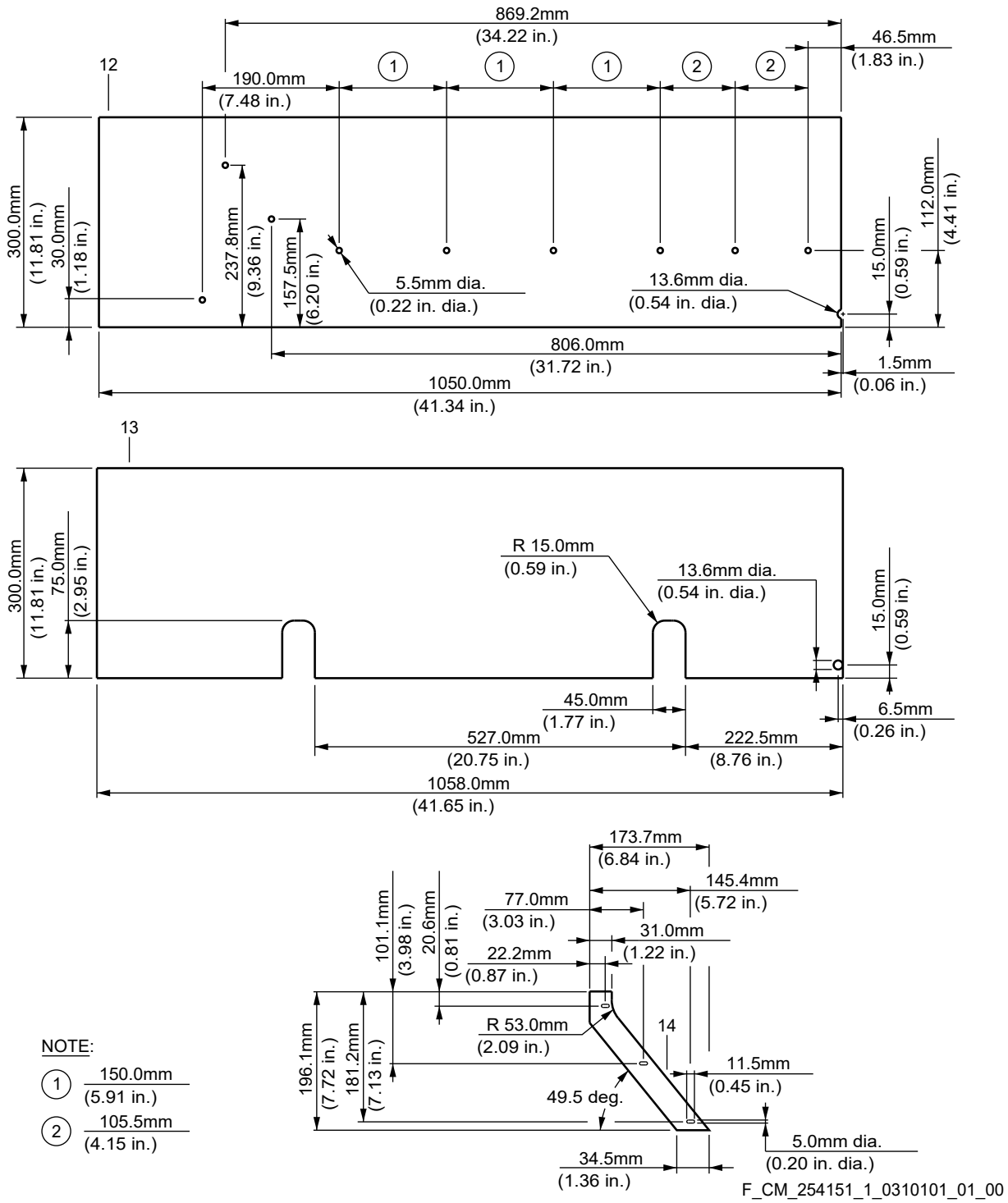

Repair of the Corroded Honeycomb Core and of the Damaged Brackets
Figure 6021/EN254151SHEET10310101

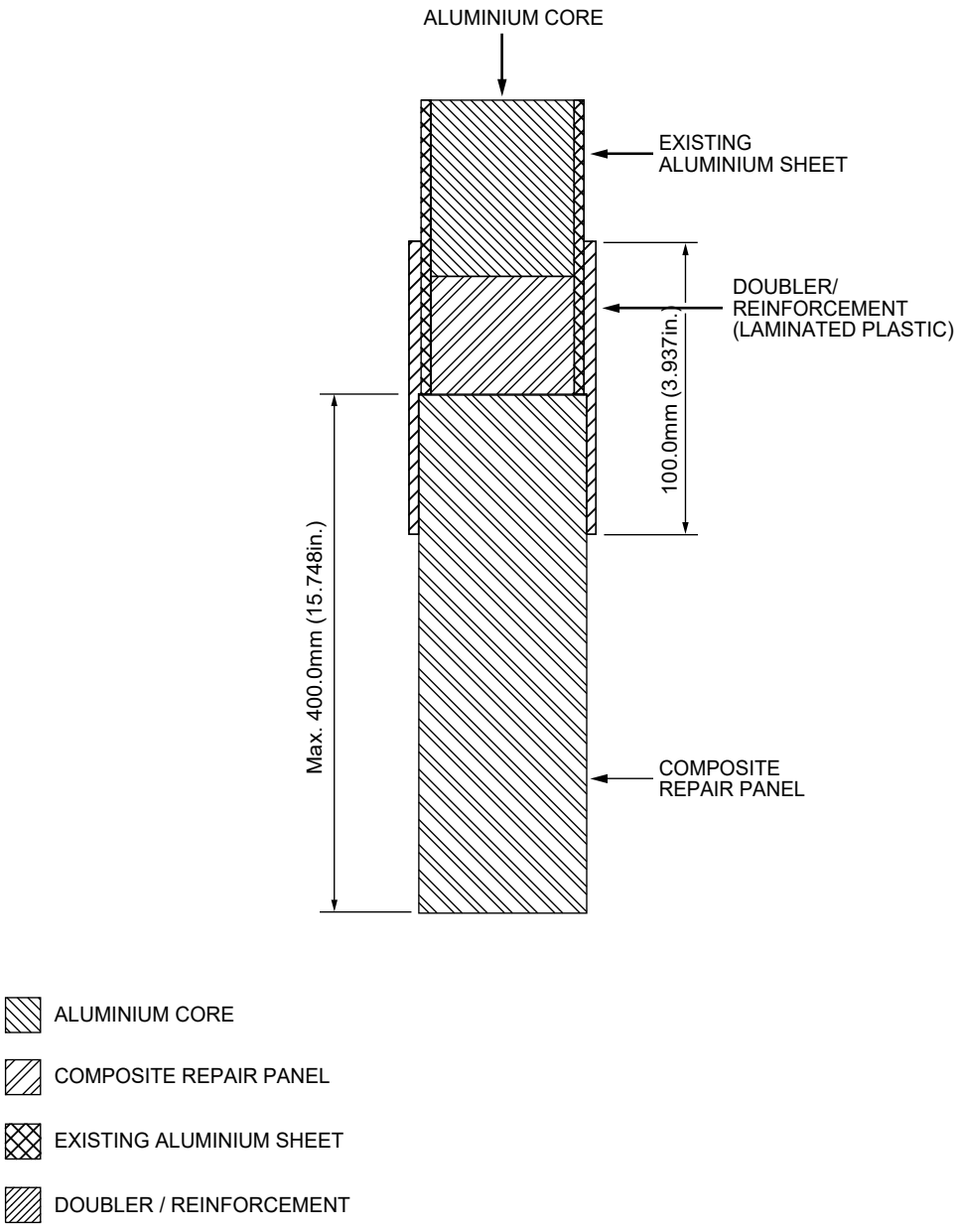

F_CM_254151_1_0320101_01_00

Repair of the Corroded Honeycomb Core and of the Damaged Brackets
Figure 6022/EN254151SHEET10320101

TASK 25-41-51-300-815-A01

8. Repair of the Aluminium Wall with Composite Material

A. General

WARNING: **BE CAREFUL WHEN YOU USE SOLVENTS/CLEANING AGENTS, SEALANTS AND OTHER MATERIALS. OBEY THE MATERIAL MANUFACTURER'S INSTRUCTIONS AND THE LOCAL REGULATIONS. MAKE SURE THAT THERE IS A GOOD FLOW OF AIR THROUGH THE WORK AREA. DO NOT BREATHE THE FUMES. DO NOT SMOKE. DO NOT USE THESE MATERIALS NEAR A FLAME, SPARKS OR SOURCES OF HEAT. USE PROTECTIVE CLOTHING, GOGGLES AND GLOVES. IF YOU GET ONE OF THESE MATERIALS ON YOUR SKIN OR IN YOUR EYES, FLUSH IT AWAY WITH A FLOW OF CLEAN WATER. IF YOU GET ONE OF THESE MATERIALS IN YOUR MOUTH, GET IMMEDIATE MEDICAL AID. IN GENERAL, THESE MATERIALS ARE POISONOUS, FLAMMABLE AND SKIN IRRITANTS.**

CAUTION: **USE ONLY THE SPECIFIED MATERIALS. MATERIALS WHICH ARE NOT SPECIFIED, CAN CAUSE DAMAGE.**

NOTE: **Material No. 08-017A Adhesive Structuralflexible is operator supplied and not part of the kit.**

NOTE: **For the repair procedure of the subcomponents refer to the supplier's manuals (refer to General).**

NOTE: **Do not use KETONE or ACETONE for the cleaning of these parts after the repair:**

-

- the floor pan,
- the service cabinet,
- the seat cover dispenser,
- the toilet shrouds with the supports,
- the air grids,
- all the parts made of poly carbonate.

- Cover these parts if you work with KETONE or ACETONE to prevent of moist. Use only ETHANOL (Material. No. 11-520) to clean the parts made of poly-carbonate.

(1) Replace these parts during the disassembly procedure:

(2)

- the screws of lower and upper attachments and all selflocking nuts,
- all the seals,
- all the bulbs and the fluorescent tubes.

(3) For the rivet replacement refer to the standard riveting procedure.

B. Job Set-up Information

(1) Consumable Materials

REFERENCE	DESIGNATION
19-003	Lint-Free Cotton Cloth
08-017A	Adhesive Structuralflexible
08-022	Compound, Void Filler Low Density
	CLEANING AGENT (11-583)

Table 6019
Consumable Materials

(2) Fixtures, Tools, Test and Support Equipment

REFERENCE	DESIGNATION
	abrasive paper, 320-400 grade of grain

Table 6020
Fixtures, Tools, Test and Support Equipment

C. Procedure

SUB TASK 25-41-51-350-033-A01

1. Repair of the Aluminium Wall with Composite Material

(a) List of the Repair kits

Component	Part Number	Remarks
Lavatory A	A225491021-000	Bench

Table 6021
Repair Kits Table

(c) Cut off the damaged lower part of the wall max. 400 mm (15.748 in.) (refer to Figure 6023).

(d) Remove 20 mm (0.787 in.) of the honeycomb from the inside of the aluminum wall, between the aluminum sheets to install the composite repair panel to the existing wall (refer to Figure 6024).

(e) Check the inserts and replace if necessary. Drill holes with a diameter 14.3 mm (0.563 in.) and a depth of 10.4 mm (0.409 in.). Take location from the existing inserts.

(f) Clean the repair area with the CLEANING AGENT (11-583) and a Material No. 19-003 Lint-Free Cotton Cloth .

(g) Install the composite repair panel with the Material No. 08-017A Adhesive Structuralflexible and supply it with reinforcements max. 100 mm (3.934 in.) completely (refer to Figure 6025, Figure 6026 and Figure 6027).

(h) Make a cutout for the support brackets of the toilet shroud assembly on the lavatory inside wall (refer to Figure 6023 and Figure 6028).

(i) Use the cable duct according to the damaged wall (refer to Figure 6023).

(j) Open the cable duct (refer to Figure 6029).

(k) Chamfer the hole.

(l) Make the cut outs (it must agree with the customer option) (refer to Figure 6030).

WARNING: **BE CAREFUL WHEN YOU USE MATERIAL NO. 08-022 COMPOUND, VOID FILLER LOW DENSITY. OBEY THE MATERIAL MANUFACTURER'S INSTRUCTIONS.**

(m) Close the honeycomb with the Material No. 08-022 Compound, Void Filler Low Density (refer to Figure 6030).

(n) Smooth the repair area with the abrasive paper, 320-400 grade of grain.

(o) Install the decor film. Type and color depends on customer requirement, see existing wall.

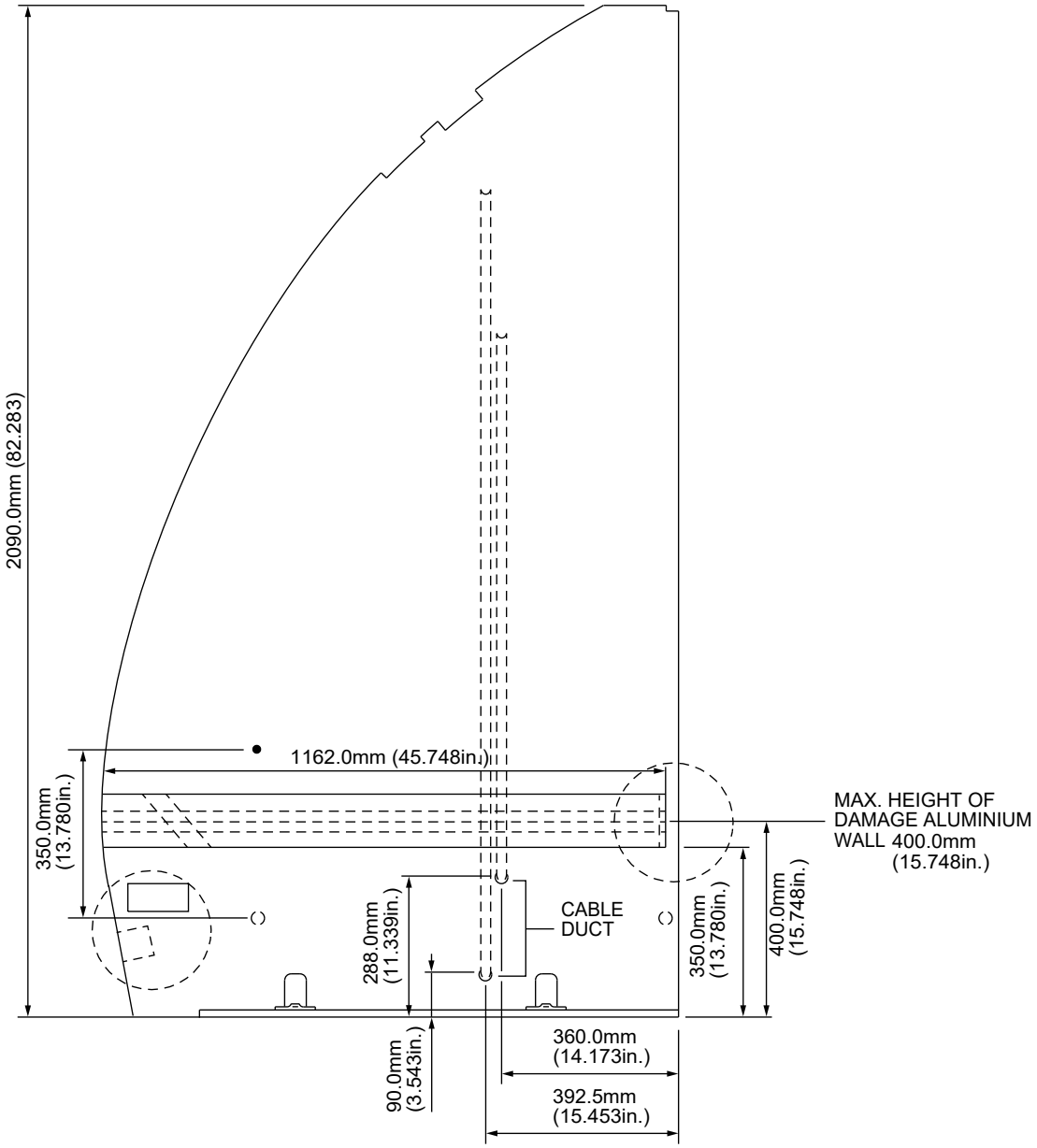

F_CM_254151_1_0330101_01_00

Repair of the Aluminium Wall with Composite Material
Figure 6023/EN254151SHEET10330101

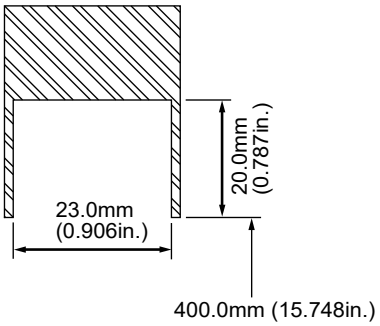

F_CM_254151_1_0340101_01_00

Repair of the Aluminium Wall with Composite Material
Figure 6024/EN254151SHEET10340101

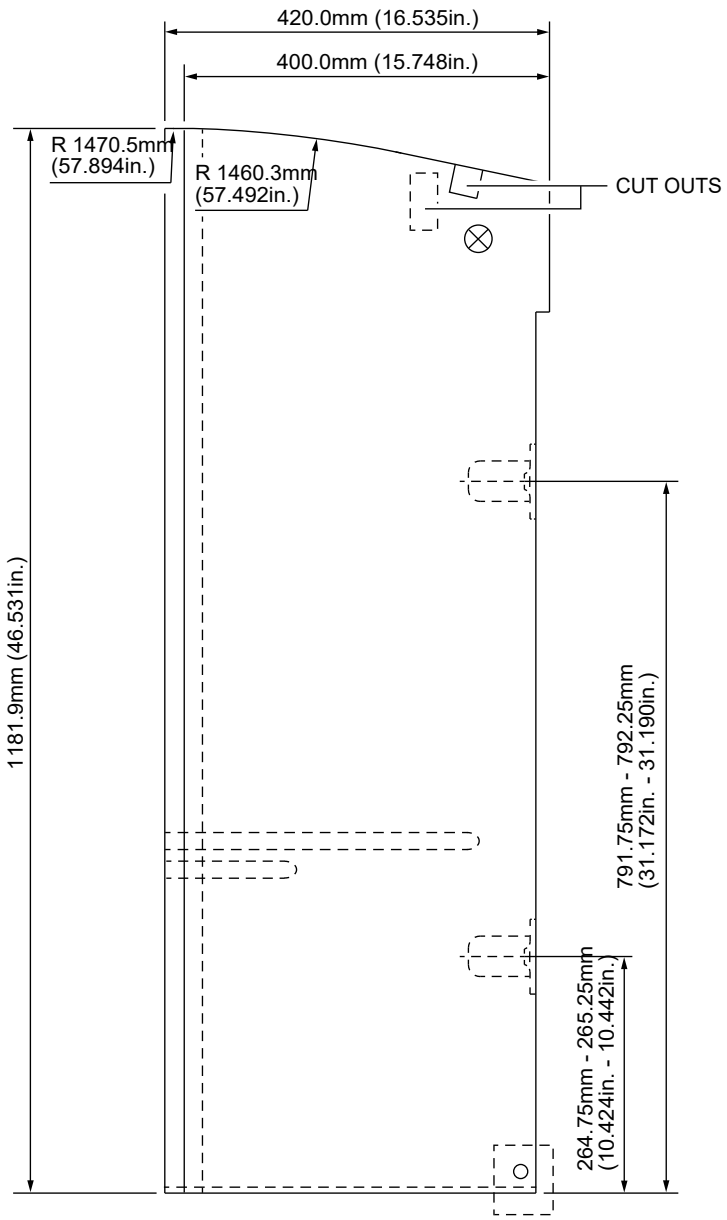

F_CM_254151_1_0350101_01_00

Repair of the Aluminium Wall with Composite Material
Figure 6025/EN254151SHEET10350101

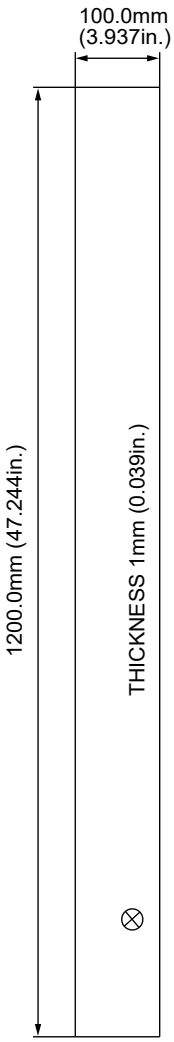

F_CM_254151_1_0360101_01_00

Repair of the Aluminium Wall with Composite Material
Figure 6026/EN254151SHEET10360101

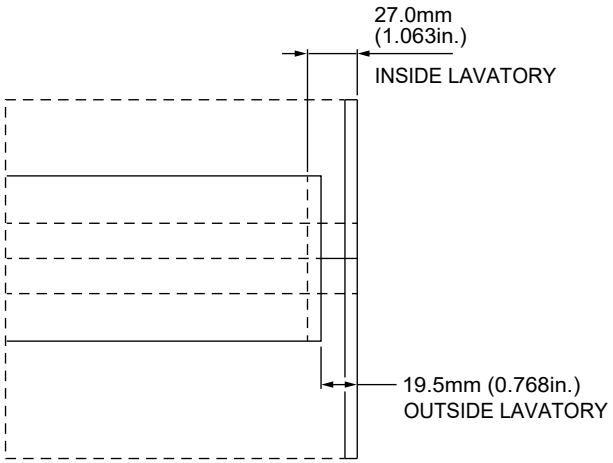

F_CM_254151_1_0370101_01_00

Repair of the Aluminium Wall with Composite Material
Figure 6027/EN254151SHEET10370101

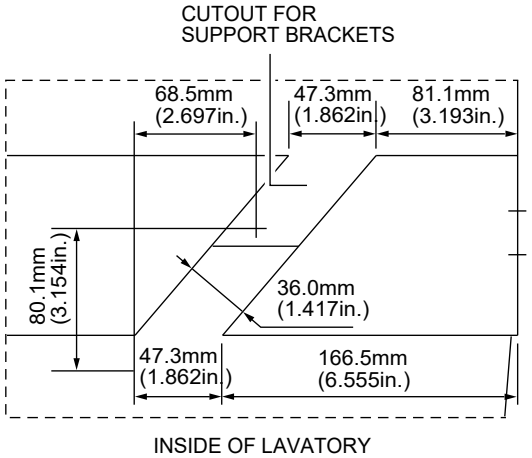

F_CM_254151_1_0380101_01_00

Repair of the Aluminium Wall with Composite Material
Figure 6028/EN254151SHEET10380101

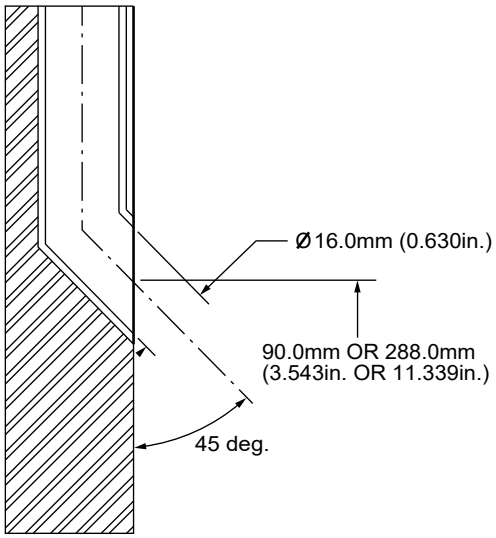

F_CM_254151_1_0390101_01_00

Repair of the Aluminium Wall with Composite Material
Figure 6029/EN254151SHEET10390101

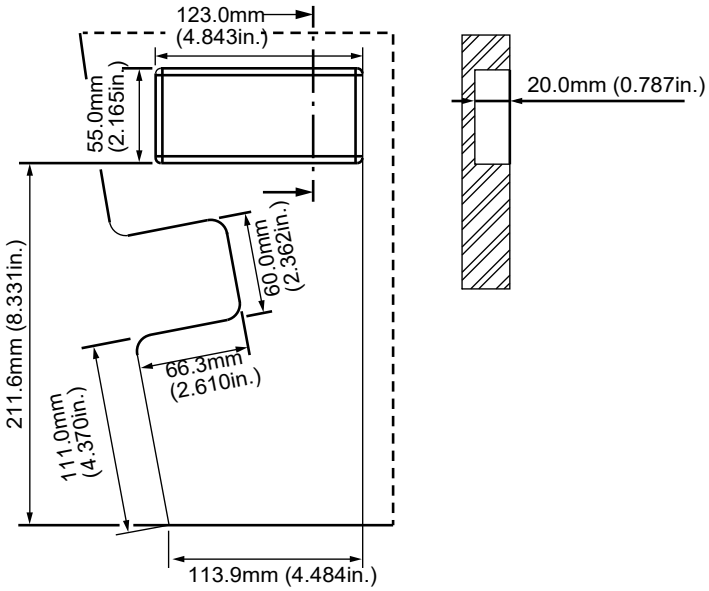

F_CM_254151_1_0400101_01_00

Repair of the Aluminium Wall with Composite Material
Figure 6030/EN254151SHEET10400101

TASK 25-41-51-300-816-A01

9. Repair of the Washstand Cover

A. General

WARNING: **BE CAREFUL WHEN YOU USE SOLVENTS/CLEANING AGENTS, SEALANTS AND OTHER MATERIALS. OBEY THE MATERIAL MANUFACTURER'S INSTRUCTIONS AND THE LOCAL REGULATIONS. MAKE SURE THAT THERE IS A GOOD FLOW OF AIR THROUGH THE WORK AREA. DO NOT BREATHE THE FUMES. DO NOT SMOKE. DO NOT USE THESE MATERIALS NEAR A FLAME, SPARKS OR SOURCES OF HEAT. USE PROTECTIVE CLOTHING, GOGGLES AND GLOVES. IF YOU GET ONE OF THESE MATERIALS ON YOUR SKIN OR IN YOUR EYES, FLUSH IT AWAY WITH A FLOW OF CLEAN WATER. IF YOU GET ONE OF THESE MATERIALS IN YOUR MOUTH, GET IMMEDIATE MEDICAL AID. IN GENERAL, THESE MATERIALS ARE POISONOUS, FLAMMABLE AND SKIN IRRITANTS.**

CAUTION: **USE ONLY THE SPECIFIED MATERIALS. MATERIALS WHICH ARE NOT SPECIFIED, CAN CAUSE DAMAGE.**

NOTE: **Material No. 08-017A Adhesive Structuralflexible is operator supplied and not part of the kit.**

NOTE: **For the repair procedure of the subcomponents refer to the supplier's manuals (refer to General).**

NOTE: **Do not use KETONE or ACETONE for the cleaning of these parts after the repair:**

-

- the floor pan,
- the service cabinet,
- the seat cover dispenser,
- the toilet shrouds with the supports,
- the air grids,
- all the parts made of poly carbonate.

- Cover these parts if you work with KETONE or ACETONE to prevent of moist. Use only ETHANOL (Material. No. 11-520) to clean the parts made of poly-carbonate.

(1) Replace these parts during the disassembly procedure:

(2)

- the screws of lower and upper attachments and all selflocking nuts,
- all the seals,
- all the bulbs and the fluorescent tubes.

(3) For the rivet replacement refer to the standard riveting procedure.

B. Job Set-up Information

(1) Consumable Materials

REFERENCE	DESIGNATION
11-010	Isopropyl Alcohol
08-017A	Adhesive Structuralflexible

Table 6022
Consumable Materials

(2) Fixtures, Tools, Test and Support Equipment

REFERENCE	DESIGNATION
	abrasive paper, 320-400 grade of grain

Table 6023
Fixtures, Tools, Test and Support Equipment

C. Procedure

SUB TASK 25-41-51-350-034-A01

1. Repair of the Washstand Cover

NOTE: **Refer to Figure 6031 and Figure 6032.**

(a) Make the bonding area of the washstand cover and of the washstand cover reinforcement rough. Use theabrasive paper, 320-400 grade of grain.

WARNING: **BE CAREFUL WHEN YOU USE MATERIAL NO. 11-010 ISOPROPYL ALCOHOL. OBEY THE MATERIAL MANUFACTURER'S INSTRUCTIONS.**

(b) Clean the bonding area with the Material No. 11-010 Isopropyl Alcohol.

(c) Bond the washstand cover reinforcement to the washstand cover with 08-017A Adhesive Structuralflexible.

NOTE: **Make the position of the angle with the boreholes.**

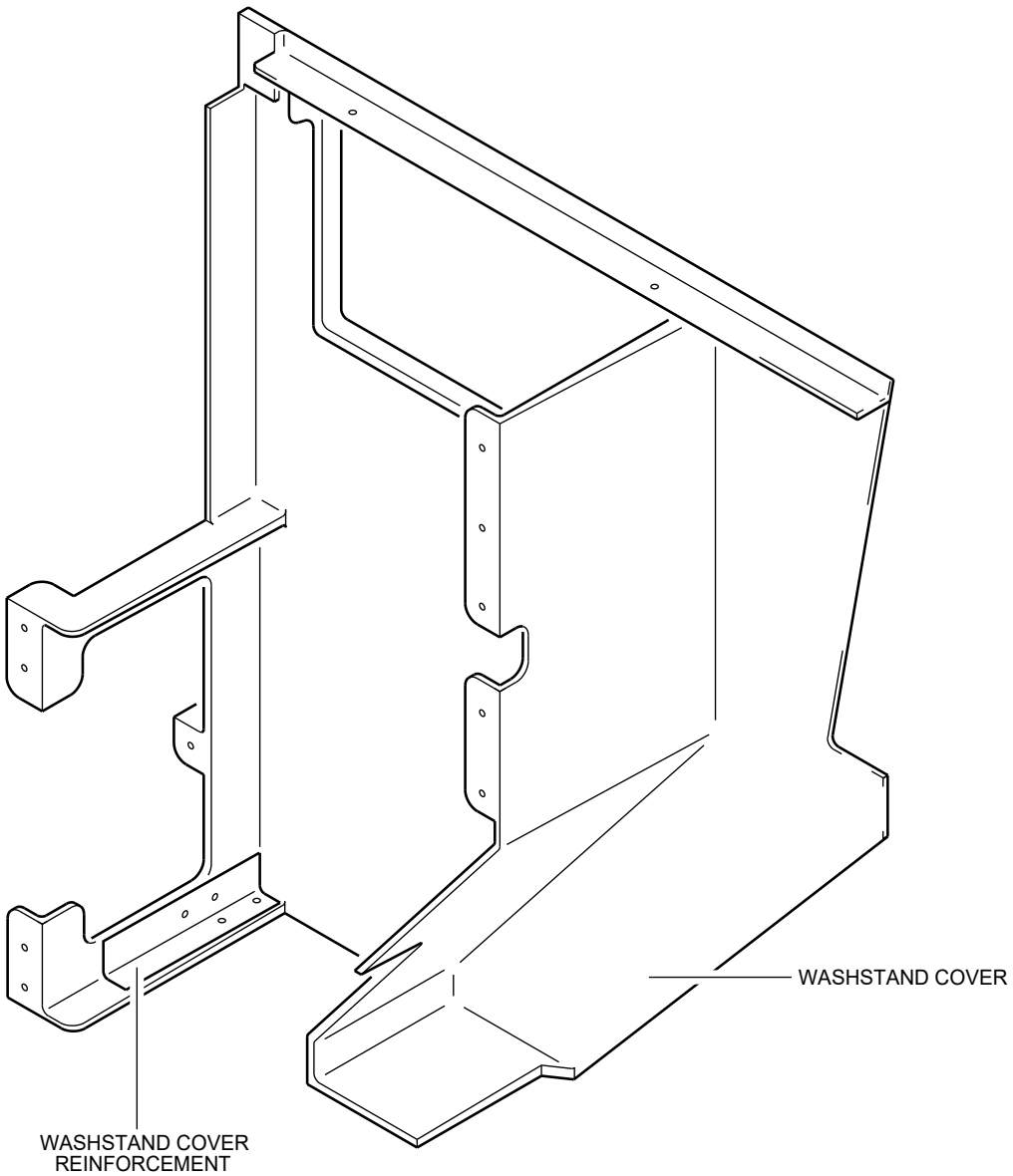

F_CM_254151_1_0410101_01_00

Repair of the Washstand Cover
Figure 6031/EN254151SHEET10410101

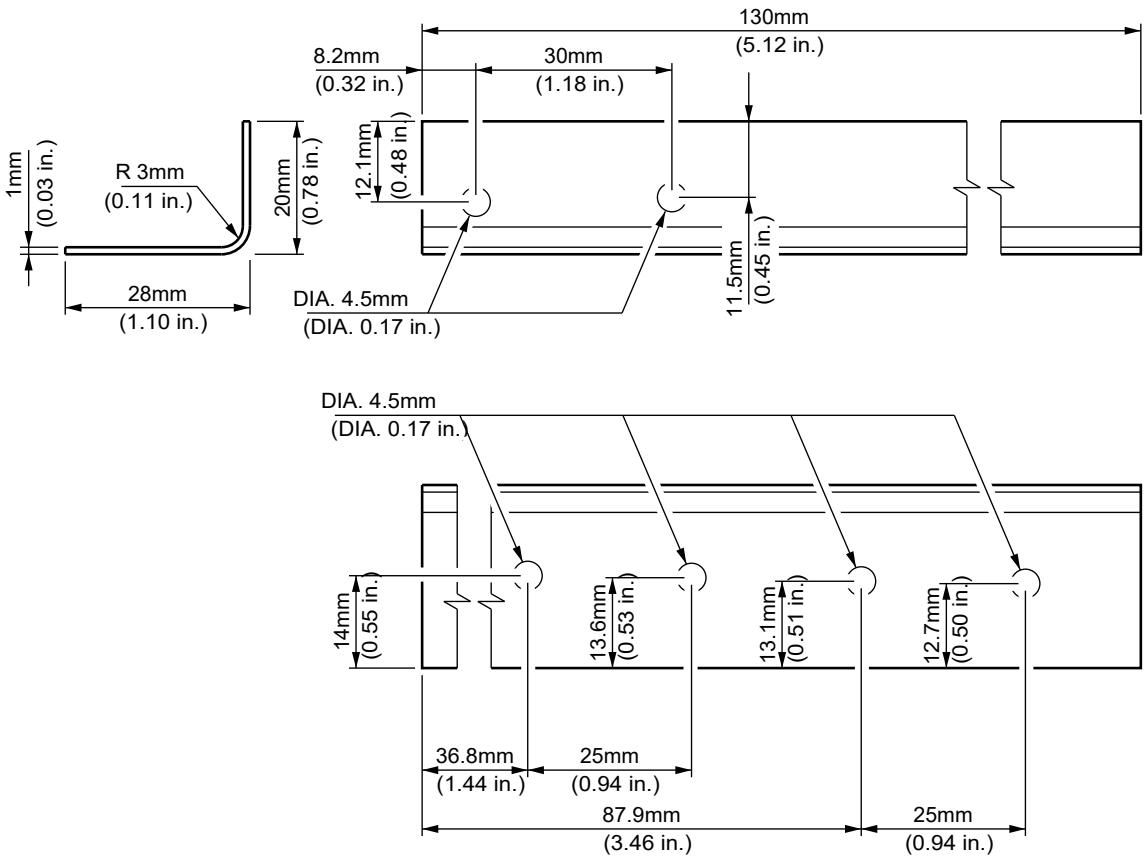

F_CM_254151_1_0420101_01_00

Repair of the Washstand Cover
Figure 6032/EN254151SHEET10420101

TASK 25-41-51-300-817-A01

10. Repair of the Waste Flap Area of the Plastic Washbasin

A. General

WARNING: **BE CAREFUL WHEN YOU USE SOLVENTS/CLEANING AGENTS, SEALANTS AND OTHER MATERIALS. OBEY THE MATERIAL MANUFACTURER'S INSTRUCTIONS AND THE LOCAL REGULATIONS. MAKE SURE THAT THERE IS A GOOD FLOW OF AIR THROUGH THE WORK AREA. DO NOT BREATHE THE FUMES. DO NOT SMOKE. DO NOT USE THESE MATERIALS NEAR A FLAME, SPARKS OR SOURCES OF HEAT. USE PROTECTIVE CLOTHING, GOGGLES AND GLOVES. IF YOU GET ONE OF THESE MATERIALS ON YOUR SKIN OR IN YOUR EYES, FLUSH IT AWAY WITH A FLOW OF CLEAN WATER. IF YOU GET ONE OF THESE MATERIALS IN YOUR MOUTH, GET IMMEDIATE MEDICAL AID. IN GENERAL, THESE MATERIALS ARE POISONOUS, FLAMMABLE AND SKIN IRRITANTS.**

CAUTION: **USE ONLY THE SPECIFIED MATERIALS. MATERIALS WHICH ARE NOT SPECIFIED, CAN CAUSE DAMAGE.**

NOTE: **For the repair procedure of the subcomponents refer to the supplier's manuals (refer to General).**

NOTE: **Do not use KETONE or ACETONE for the cleaning of these parts after the repair:**

-

- the floor pan,
- the service cabinet,
- the seat cover dispenser,
- the toilet shrouds with the supports,
- the air grids,
- all the parts made of poly carbonate.

- Cover these parts if you work with KETONE or ACETONE to prevent of moist. Use only ETHANOL (Material. No. 11-520) to clean the parts made of poly-carbonate.

(1) Replace these parts during the disassembly procedure:

(2)

- the screws of lower and upper attachments and all selflocking nuts,
- all the seals,
- all the bulbs and the fluorescent tubes.

(3) For the rivet replacement refer to the standard riveting procedure.

B. Job Set-up Information

(1) Consumable Materials

REFERENCE	DESIGNATION
19-011	Scotch Brite Pads
11-010	Isopropyl Alcohol
08-084	Polyester Film Tape (Transparent)
08-051	Epoxy Resin
19-003	Lint-Free Cotton Cloth
11-006	Methyl Alcohol
08-074	Masking Tape
	VARICOR (Material No. DCIN900)
	VARICOR (Material No. DCIN900)
	VARICOR (Material No. DCIN900)

Table 6024
Consumable Materials

(2) Fixtures, Tools, Test and Support Equipment

REFERENCE	DESIGNATION
	abrasive paper

Table 6025
Fixtures, Tools, Test and Support Equipment

C. Procedure

SUB TASK 25-41-51-350-035-A01

1. Scratches

(a) Remove the scratches up to a depth of 0.3 mm (0.012 in.) with the abrasive paper. The grade of grain of the abrasive paper depends on the depth of the scratches. Use step by step the next higher grade of grain.

(b) Polish by making a rotating movement.

(c) Use the Material No. 19-011 Scotch Brite Pads.

(d) Clean and polish the washbasin.

SUB TASK 25-41-51-350-036-A01

2. Repair of the Waste Chute Flap

NOTE: **Refer to Figure 6033.**

(a) Remove the waste chute flap (4).

(b) Use abrasive paper, 320-400 grade of grain, to remove the old bonding material from the hinge (1) and from the waste chute flap (4).

WARNING: **BE CAREFUL WHEN YOU USE MATERIAL NO. 11-010 ISOPROPYL ALCOHOL. OBEY THE MATERIAL MANUFACTURER'S INSTRUCTIONS.**

(c) Use the Material No. 11-010 Isopropyl Alcohol to clean the bonding surfaces of the hinge (1) and of the waste chute flap (4).

(d) Install the screws (3) on the hinge (1) and put the hinge (1) to the loaded position.

(e) Put the Material No. Material No. 08-084 Polyester Film Tape (Transparent) 10 mm (0.394 in.) wide around the hinge (1) until the tape holds it in the loaded position.

WARNING: **BE CAREFUL WHEN YOU USE MATERIAL NO. 08-051 EPOXY RESIN. OBEY THE MATERIAL MANUFACTURER'S INSTRUCTIONS.**

(f) Apply the Material No. 08-051 Epoxy Resin to the surface of the hinge (1) to be bonded.

(g) Put the hinge (1) in position and tighten the screws (3).

(h) Put the waste chute flap (4) in position from under the washbasin and hold it.

(i) Cut the tape (2) Material No. 08-084 Polyester Film Tape (Transparent) and allow the hinge (1) to come against the waste chute flap (4).

NOTE: Part of the tape will stay with the hinge.

NOTE: The bond between the joints will take approximately 2 hours to dry.

(j) Visually examine the waste chute flap (4) to make sure it is engaged correctly.

WARNING: BE CAREFUL WHEN YOU USE MATERIAL NO. 11-010 ISOPROPYL ALCOHOL. OBEY THE MATERIAL MANUFACTURER'S INSTRUCTIONS.

(k) Use the Material No. 11-010 Isopropyl Alcohol and a Material No. 19-003 Lint-Free Cotton Cloth to remove unwanted bonding material.

(l) Put the WARNING NOTICE in position to tell persons not to operate the waste chute flap (4) for 2 hours.

(m) Install the waste box.

(n) Install the damper as necessary.

(o) Push and release the waste chute flap (4) to make sure it operates correctly.

SUB TASK 25-41-51-350-037-A01

3. Repair of the Waste Flap Area

NOTE: Refer to Figure 6034 and Figure 6035.

(a) Prepare the repair area.

1 Push the waste flap (1) (refer to Figure 6034) and set it in the open position.

2 Transfer the contour of the replacement part (3) (refer to Figure 6034), item of the VARICOR (Material No. DCIN900)to the damaged area of the washbasin (2) (refer to Figure 6034).

3 Carefully remove the unwanted material with a milling cutter.

NOTE: The material thickness of the replacement part (3) (refer to Figure 6034) is 4.0 mm (0.158 in.).

4 Chamfer the lower contoured edge of the replacement part (3) (refer to Figure 6035).

5 Put the replacement part (3) (refer to Figure 6035) in position on the washbasin (2) (refer to Figure 6035) and make sure that it has the correct dimensions.

(b) Install the Replacement Part (refer to Figure 6036)

1 Make sure that the ambient temperature of the repair area is not less than 18 deg. C (64.40 deg. F).

WARNING: BE CAREFUL WHEN YOU USE MATERIAL NO. 11-006 METHYL ALCOHOL. OBEY THE MATERIAL MANUFACTURER'S INSTRUCTIONS.

2 Clean the mating surfaces of the repair with the Material No. 11-006 Methyl Alcohol and a Material No. 19-003 Lint-Free Cotton Cloth .

3 Put the Material No. 08-074 Masking Tape in position on the lower surface of the washbasin (2).

4 Apply the prepared adhesive, item of the VARICOR (Material No. DCIN900) to the repair area of the washbasin.

NOTE: Obey the manufacturers instructions.

5 Put the replacement part (3) in position with a light pressure and set it with a PLIERS-NOSE, SOFT, LONG or a wooden block (4).

6 Let the repair cure at a temperature of:

- 20 deg. C (68.00 deg. F) for 6 hours
- 25 deg. C (77.00 deg. F) for 4 hours
- 30 deg. C (86.00 deg. F) for 3 hours

Obey the manufacturers instructions.

8 Remove the pliers or the wooden block (4) and the masking tape.

(c) Make the repair area smooth with:

- abrasive paper, 180 grade of grain,
- abrasive paper, 220 grade of grain,
- abrasive paper, 320 grade of grain and
- abrasive fleece of VARICOR (Material No. DCIN900).

(e) Release the waste flap (1) (refer to Figure 6034) and make sure that it closes correctly.

(f) Clean and polish the washbasin (2).

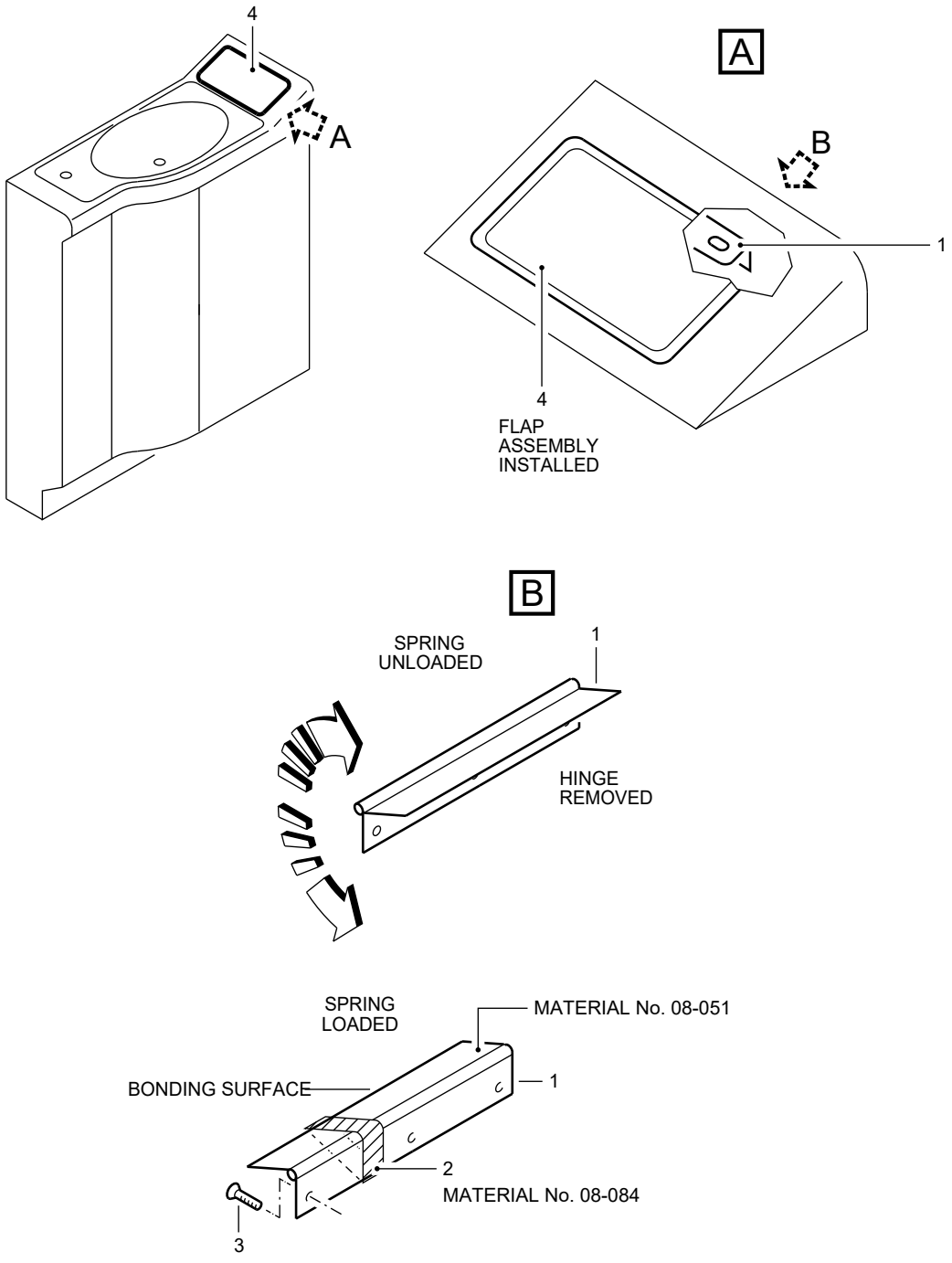

F_CM_254151_1_0430101_01_00

Repair of the Waste Flap Area of the Plastic Washbasin
Figure 6033/EN254151SHEET10430101

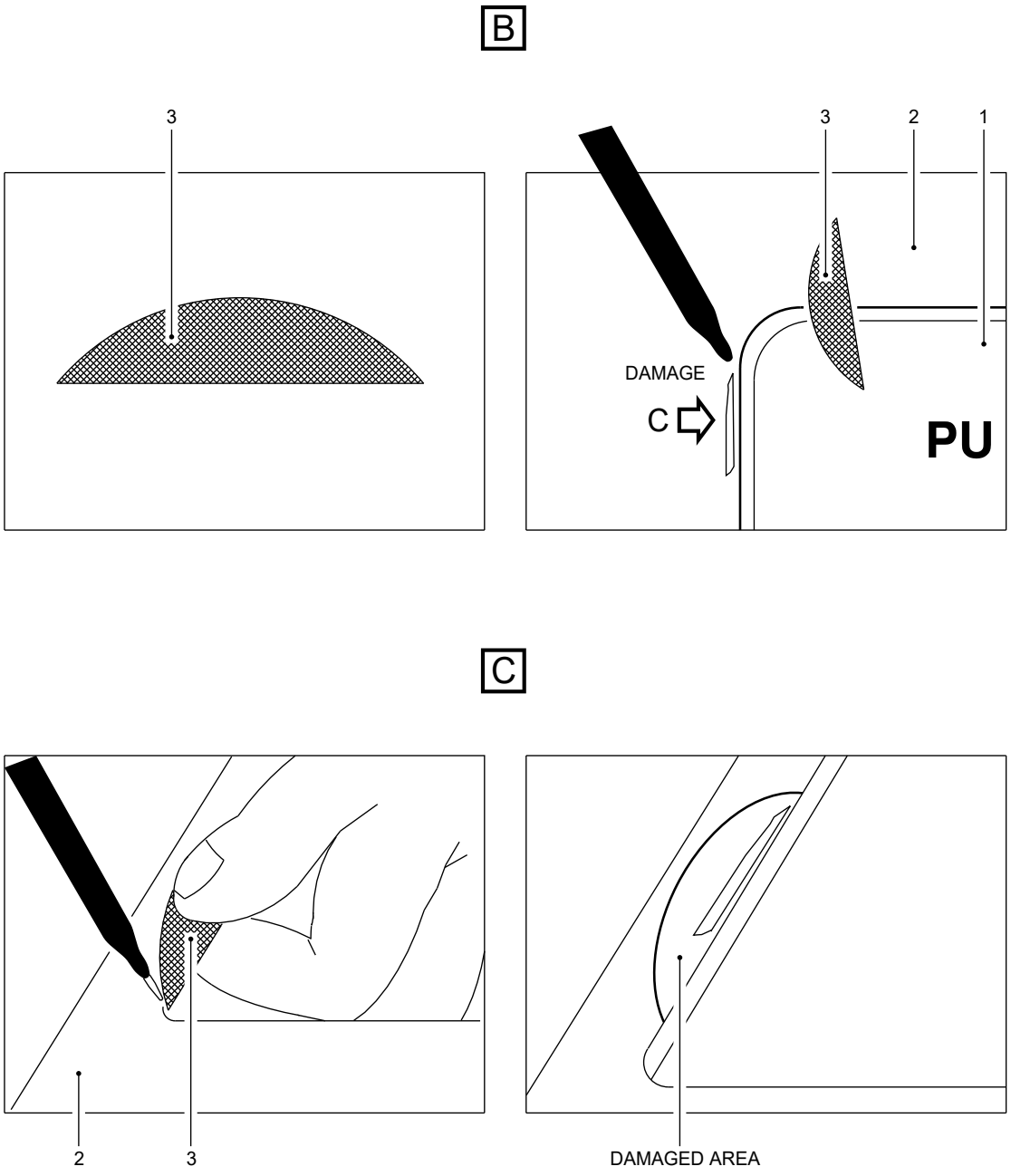

Repair of the Waste Flap Area of the Plastic Washbasin
Figure 6034/EN254151SHEET10440101

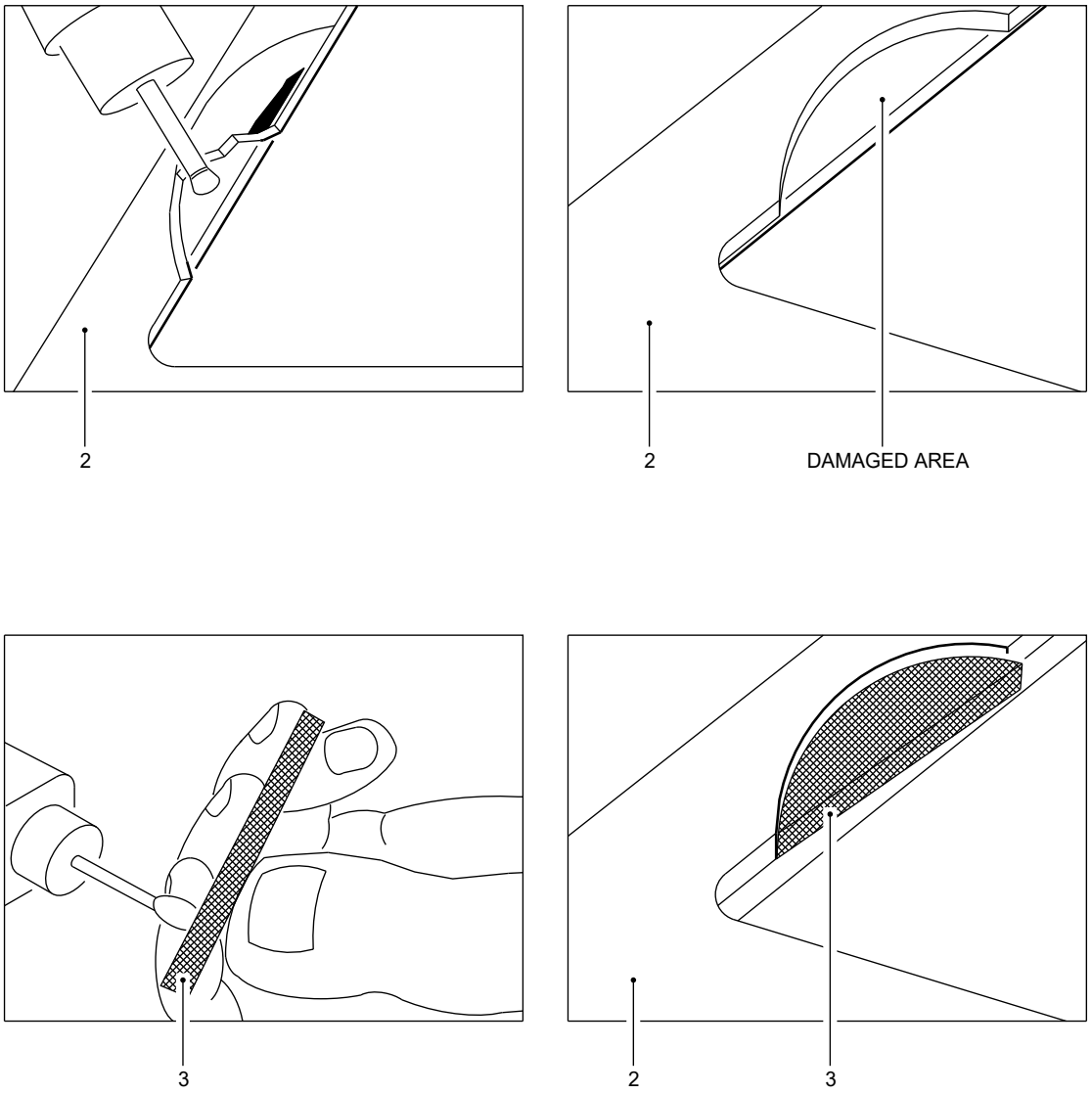

F_CM_254151_1_0450101_01_00

Repair of the Waste Flap Area of the Plastic Washbasin
Figure 6035/EN254151SHEET10450101

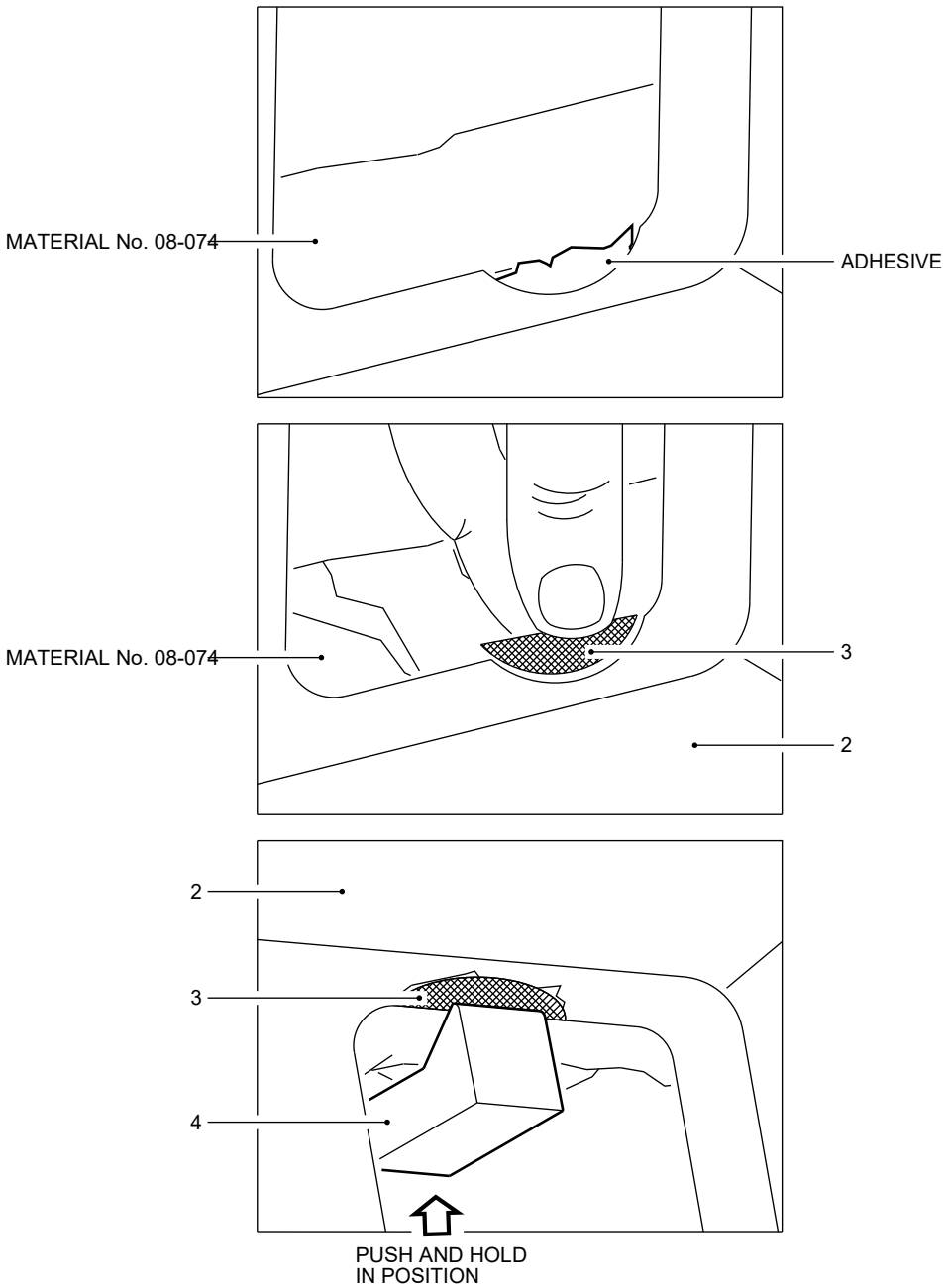

F_CM_254151_1_0460101_01_00

Repair of the Waste Flap Area of the Plastic Washbasin
Figure 6036/EN254151SHEET10460101

TASK 25-41-51-300-818-A01

11. Installation of the Bonded Reinforcing Strip

A. General

WARNING: **BE CAREFUL WHEN YOU USE SOLVENTS/CLEANING AGENTS, SEALANTS AND OTHER MATERIALS. OBEY THE MATERIAL MANUFACTURER'S INSTRUCTIONS AND THE LOCAL REGULATIONS. MAKE SURE THAT THERE IS A GOOD FLOW OF AIR THROUGH THE WORK AREA. DO NOT BREATHE THE FUMES. DO NOT SMOKE. DO NOT USE THESE MATERIALS NEAR A FLAME, SPARKS OR SOURCES OF HEAT. USE PROTECTIVE CLOTHING, GOGGLES AND GLOVES. IF YOU GET ONE OF THESE MATERIALS ON YOUR SKIN OR IN YOUR EYES, FLUSH IT AWAY WITH A FLOW OF CLEAN WATER. IF YOU GET ONE OF THESE MATERIALS IN YOUR MOUTH, GET IMMEDIATE MEDICAL AID. IN GENERAL, THESE MATERIALS ARE POISONOUS, FLAMMABLE AND SKIN IRRITANTS.**

CAUTION: **USE ONLY THE SPECIFIED MATERIALS. MATERIALS WHICH ARE NOT SPECIFIED, CAN CAUSE DAMAGE.**

NOTE: **For the repair procedure of the subcomponents refer to the supplier's manuals (refer to General).**

NOTE: **Do not use KETONE or ACETONE for the cleaning of these parts after the repair:**

-

- the floor pan,
- the service cabinet,
- the seat cover dispenser,
- the toilet shrouds with the supports,
- the air grids,
- all the parts made of poly carbonate.

- Cover these parts if you work with KETONE or ACETONE to prevent of moist. Use only ETHANOL (Material. No. 11-520) to clean the parts made of poly-carbonate.

B. Job Set-up Information

(1) Consumable Materials

REFERENCE	DESIGNATION
08-017	Bonding Metal/Metal

Table 6026
Consumable Materials

C. Procedure

SUB TASK 25-41-51-350-038-A01
D2549010502000 D2549010504800 D2549020503800

1. Installation of the Reinforcing Strip (06A-1)

NOTE: **ALSO FOR PN D2549010502000 POST SB 25-1312.**

NOTE: **ONLY VALID FOR PN POST SB 25-1314.**

WARNING: **BE CAREFUL WHEN YOU USE MATERIAL NO. 08-017 BONDING METAL/METAL. OBEY THE MATERIAL MANUFACTURER'S INSTRUCTIONS.**

(a) Apply a layer of Material No. 08-017 Bonding Metal/Metal on the reinforcing strip (440).

(b) Install the reinforcing strip (440) below the side wall assembly (10).

SUB TASK 25-41-51-350-038-B01
D2549010510200 D2549020600000 R225401107-004

2. Installation of the Reinforcing Strip (06B-1)

NOTE: **ONLY VALID FOR PN POST SB 25-1314.**

WARNING: **BE CAREFUL WHEN YOU USE MATERIAL NO. 08-017 BONDING METAL/METAL. OBEY THE MATERIAL MANUFACTURER'S INSTRUCTIONS.**

(a) Apply a layer of Material No. 08-017 Bonding Metal/Metal on the reinforcing strip (310).

(b) Install the reinforcing strip (310) below the side wall assembly (10).

SUB TASK 25-41-51-350-038-C01
D2549010508400 D2549010509000

3. Installation of the Reinforcing Strip (06E-1)

NOTE: **ONLY VALID FOR PN POST SB 25-1314.**

WARNING: **BE CAREFUL WHEN YOU USE MATERIAL NO. 08-017 BONDING METAL/METAL. OBEY THE MATERIAL MANUFACTURER'S INSTRUCTIONS.**

(a) Apply a layer of Material No. 08-017 Bonding Metal/Metal on the reinforcing strip (320).

(b) Install the reinforcing strip (320) below the side wall assembly (10).

SUB TASK 25-41-51-350-038-D01
D2549020707800

4. Installation of the Reinforcing Strip (06N-1)

NOTE: **ONLY VALID FOR PN POST SB 25-1314.**

WARNING: **BE CAREFUL WHEN YOU USE MATERIAL NO. 08-017 BONDING METAL/METAL. OBEY THE MATERIAL MANUFACTURER'S INSTRUCTIONS.**

(a) Apply a layer of Material No. 08-017 Bonding Metal/Metal on the reinforcing strip (380).

(b) Install the reinforcing strip (380) below the side wall assembly (10).

SUB TASK 25-41-51-350-038-E01
D2549020708800

5. Installation of the Reinforcing Strip (06Q-1)

NOTE: **ONLY VALID FOR PN POST SB 25-1314.**

WARNING: **BE CAREFUL WHEN YOU USE MATERIAL NO. 08-017 BONDING METAL/METAL. OBEY THE MATERIAL MANUFACTURER'S INSTRUCTIONS.**

(a) Apply a layer of Material No. 08-017 Bonding Metal/Metal on the reinforcing strip (400).

(b) Install the reinforcing strip (400) below the side wall assembly (10).

SUB TASK 25-41-51-350-038-F01
D2549010402000 D2549010613800 D2549020805600 D2549020808400 R225401192-002

6. Installation of the Reinforcing Strip (06Z-1)

NOTE: **ONLY VALID FOR PN POST SB 25-1314.**

WARNING: **BE CAREFUL WHEN YOU USE MATERIAL NO. 08-017 BONDING METAL/METAL. OBEY THE MATERIAL MANUFACTURER'S INSTRUCTIONS.**

(a) Apply a layer of Material No. 08-017 Bonding Metal/Metal on the reinforcing strip (360).

(b) Install the reinforcing strip (360) below the side wall assembly (10).

SUB TASK 25-41-51-350-038-G01
D2549010402800 D2549010614600 D2549020403800 R225401658-000

7. Installation of the Reinforcing Strip (48C-1)

NOTE: **ONLY VALID FOR PN POST SB 25-1314.**

WARNING: **BE CAREFUL WHEN YOU USE MATERIAL NO. 08-017 BONDING METAL/METAL. OBEY THE MATERIAL MANUFACTURER'S INSTRUCTIONS.**

(a) Apply a layer of Material No. 08-017 Bonding Metal/Metal on the reinforcing strip (500).

(b) Install the reinforcing strip (500) below the side wall assembly (10).

SUB TASK 25-41-51-350-038-H01
D2549010504200 D2549010511200 D2549010513200 D2549010514200 D2549010600000 D2549010604000 D2549020603200 D2549020608800 D2549020706400 R225401107-002

8. Installation of the Reinforcing Strip (48E-1)

NOTE: **ALSO FOR PN D2549020603200, D2549010509000, D2549010604000 AND D2549010504800 POST SB 25-1289.**

NOTE: **ONLY VALID FOR PN POST SB 25-1314.**

WARNING: **BE CAREFUL WHEN YOU USE MATERIAL NO. 08-017 BONDING METAL/METAL. OBEY THE MATERIAL MANUFACTURER'S INSTRUCTIONS.**

(a) Apply a layer of Material No. 08-017 Bonding Metal/Metal on the reinforcing strip (510).

(b) Install the reinforcing strip (510) below the side wall assembly (10).

SUB TASK 25-41-51-350-038-J01
D2549020802600

9. Installation of the Reinforcing Strip (48F-1)

NOTE: **ONLY VALID FOR PN POST SB 25-1314.**

WARNING: **BE CAREFUL WHEN YOU USE MATERIAL NO. 08-017 BONDING METAL/METAL. OBEY THE MATERIAL MANUFACTURER'S INSTRUCTIONS.**

(a) Apply a layer of Material No. 08-017 Bonding Metal/Metal on the reinforcing strip (490).

(b) Install the reinforcing strip (490) below the side wall assembly (10).

SUB TASK 25-41-51-350-038-K01
D2549010501000 R225401107-000

10. Installation of the Reinforcing Strip (48J-1)

NOTE: **ONLY VALID FOR PN POST SB 25-1314.**

WARNING: **BE CAREFUL WHEN YOU USE MATERIAL NO. 08-017 BONDING METAL/METAL. OBEY THE MATERIAL MANUFACTURER'S INSTRUCTIONS.**

(a) Apply a layer of Material No. 08-017 Bonding Metal/Metal on the reinforcing strip (470).

(b) Install the reinforcing strip (490) below the side wall assembly (10).

SUB TASK 25-41-51-350-038-L01

11. Installation of the Reinforcing Strip

(a) Not applicable.

TASK 25-41-51-350-801-A01

12. Replacement of the Bonded Parts

A. General

This task tells you how to replace the bonded parts.

Each subtask of this task gives data for a different type of adhesive, sealant or bonding material.

Disassemble the component as necessary for a satisfactory replacement of the bonded parts.

The replacement procedure for bonded inserts is given in SPM 25-00-01.

The replacement procedure for self-adhesive placards is given in Replacement of the Self-adhesive Placards.

B. Job Set-up Information

(1) Consumable Materials

REFERENCE	DESIGNATION
19-011	Scotch Brite Pads
11-583	Solvent
11-010	Isopropyl Alcohol
19-003	Lint-Free Cotton Cloth
08-026	Adhesive/Sealant one Part, RTV Silicone Rubber
08-074	Masking Tape
08-001	General Purpose Adhesive Honeycomb Filler
08-010A	Epoxy Resin and Hardener Adhesive
08-017A	Adhesive Structuralflexible
08-025	Two Component Polyurethane Adhesive

Table 6027
Consumable Materials

	HELMIPUR-SH100 (V D0293)
08-006B	Adhesive General Purpose
09-054	Silicone Sealant (1 Part) for NTF
09-059	Silicone Sealant
08-005	Sealing Tape, obsolete-use 08-005A,B,C
	08-696 - 3M SCOTCH VHB Tape 4930
	3M SCOTCH MOUNT 4032 (V D26066)
08-082	Acrylic Pressure Sensitive Adhesive Film
	DAN98S2A/B
	DAN98S3A/B

Table 6027
Consumable Materials

(2) Fixtures, Tools, Test and Support Equipment

REFERENCE	DESIGNATION
	Non-Metallic Scraper

Table 6028
Fixtures, Tools, Test and Support Equipment

C. Procedure

WARNING: **BE CAREFUL WHEN YOU USE CONSUMABLE MATERIALS. OBEY THE MATERIAL MANUFACTURER'S INSTRUCTIONS AND THE LOCAL REGULATIONS. MAKE SURE THAT THERE IS A GOOD FLOW OF AIR THROUGH THE WORK AREA. DO NOT BREATHE THE FUMES. DO NOT SMOKE. DO NOT USE THESE MATERIALS NEAR A FLAME, SPARKS OR SOURCES OF HEAT. USE PROTECTIVE CLOTHING, GOGGLES AND GLOVES. IF YOU GET ONE OF THESE MATERIALS ON YOUR SKIN OR IN YOUR EYES, FLUSH IT AWAY WITH A FLOW OF CLEAN WATER. IF YOU GET ONE OF THESE MATERIALS IN YOUR MOUTH, GET IMMEDIATE MEDICAL AID. IN GENERAL, THESE MATERIALS ARE POISONOUS, FLAMMABLE AND SKIN IRRITANTS.**

WARNING: **BE CAREFUL WHEN YOU USE CONSUMABLE MATERIALS. OBEY THE MATERIAL MANUFACTURER'S INSTRUCTIONS AND YOUR LOCAL REGULATIONS.**

CAUTION: **USE ONLY THE SPECIFIED MATERIALS. MATERIALS WHICH ARE NOT SPECIFIED, CAN CAUSE DAMAGE.**

CAUTION: **DO NOT USE KETONE OR ACETONE TO CLEAN PARTS MADE OF PLASTIC OR POLYCARBONATE. IF YOU USE KETONE OR ACETONE NEAR SUCH PARTS, PUT PROTECTION ON THEM TO PREVENT DAMAGE.**

CAUTION: **DO NOT TOUCH THE BONDING SURFACES AFTER THE CLEANING.**

SUB TASK 25-41-51-360-002-A01

1. Replacement of the Parts which are bonded with Material No. 08-026 Adhesive/Sealant one Part, RTV Silicone Rubber

   NOTE: **The process and material specification PMS 01-02-37 gives more data about the bonding with silicone base adhesives.**

   (a) Remove the damaged or delaminated part with a Non-Metallic Scraper or with a Milling Cutter from the bonding surface.

   NOTE: **You can use a Hot-Air Blower with low heat to make the adhesive soft for an easier removal.**

   (b) If necessary, remove larger quantities of adhesive with Material No. 19-011 Scotch Brite Pads or with Abrasive Paper, 120 grade of grain.

   (c) Clean the repair area with Material No. 11-583 Solvent or Material No. 11-010 Isopropyl Alcohol and a Material No. 19-003 Lint-Free Cotton Cloth.

   (d) Let the area dry for a minimum of 30 minutes.

   (e) Apply the Material No. 08-026 Adhesive/Sealant one Part, RTV Silicone Rubber equally to the bonding area.

   NOTE: **If necessary, you can use a Seal Gun.**

   (f) Put the new part in position and bond it to the bonding surface.

   NOTE: **You can use Material No. 08-074 Masking Tape to hold the part in its position.**

(g) If necessary, apply pressure to the bonded part to remove air bubbles and creases and use a Spatula or equivalent to make the adhesive joint smooth.

(h) Let the adhesive cure for 1 hour.

(i) Remove the Material No. 08-074 Masking Tape .

(j) Remove any unwanted adhesive with Material No. 11-583 Solvent and Material No. 19-003 Lint-Free Cotton Cloth .

SUB TASK 25-41-51-360-003-A01

2. Replacement of the Parts which are bonded with 08-001 General Purpose Adhesive Honeycomb Filler or Material No. 08-010A Epoxy Resin and Hardener Adhesive or Material No. 08-017A Adhesive Structuralflexible

NOTE: **The process and material specification PMS 01-02-27 gives more data about the application of epoxy primers.**

NOTE: **The process and material specification PMS 02-08-06 gives more data about the bonding with epoxy adhesives.**

NOTE: **The process and material specification PMS 02-08-09 gives more data about the bonding with ARALDITE.**

(a) Remove the damaged or delaminated part with a Non-Metallic Scraper or with a Milling Cutter from the bonding surface.

NOTE: **You can use a Hot-Air Blower with low heat to make the adhesive soft for an easier removal.**

(b) If necessary, remove larger quantities of adhesive with Material No. 19-011 Scotch Brite Pads or with Abrasive Paper, 120 grade of grain.

(c) Clean the repair area with Material No. 11-583 Solvent or Material No. 11-010 Isopropyl Alcohol and a Material No. 19-003 Lint-Free Cotton Cloth.

(d) Let the area dry for a minimum of 30 minutes.

(e) Apply the Material No. 08-001 General Purpose Adhesive Honeycomb Filler or Material No. 08-010A Epoxy Resin and Hardener Adhesive or Material No. 08-017A Adhesive Structuralflexible equally to the bonding area.

NOTE: **If necessary, you can use a Spatula.**

(f) Put the new part in position and bond it to the bonding surface.

NOTE: You can use Material No. 08-074 Masking Tape to hold the part in its position.

(g) If necessary, apply pressure to the bonded part to remove air bubbles and creases and use a Spatula or equivalent to make the adhesive joint smooth.

(h) Let the adhesive cure.

(i) Remove the Material No. 08-074 Masking Tape .

(j) Remove any unwanted adhesive with Material No. 11-583 Solvent and Material No. 19-003 Lint-Free Cotton Cloth .

SUB TASK 25-41-51-360-004-A01

3. Replacement of the Parts which are bonded with Material No. 08-553 Formica Bonding Rigid Vinyl

(a) Remove the damaged or delaminated part with a Non-Metallic Scraper or with a Milling Cutter from the bonding surface.

NOTE: You can use a Hot-Air Blower with low heat to make the adhesive soft for an easier removal.

(b) If necessary, remove larger quantities of adhesive with Material No. 19-011 Scotch Brite Pads or with Abrasive Paper, 120 grade of grain.

(c) Clean the repair area with Material No. 11-583 Solvent or Material No. 11-010 Isopropyl Alcohol and a Material No. 19-003 Lint-Free Cotton Cloth.

(d) Let the area dry for a minimum of 30 minutes.

(e) Apply the Material No. 08-553 - Formica Bonding Rigid Vinyl with a Spray Gun, 1.5 mm (0.059 in) nozzle diameter and 6 - 7 bar (87.023 - 101.526 psi) air pressure from a distance of between 300 mm (11.81 in) to 500 mm (19.69 in) or with a Paint Roller equally to the bonding area.

(f) Put the new part in position and bond it to the bonding surface.

(g) If necessary, apply pressure to the bonded part to remove air bubbles and creases and use a Spatula or equivalent to make the adhesive joint smooth.

(h) Let the adhesive cure for 20 up to 30 minutes.

(i) Remove any unwanted adhesive with Material No. 11-583 Solvent and Material No. 19-003 Lint-Free Cotton Cloth .

SUB TASK 25-41-51-360-005-A01

4. Replacement of the Parts which are bonded with Material No. 08-025 Two Component Polyurethane Adhesive or Material No. HELMIPUR-SH100 (V D0293)

(a) Remove the damaged or delaminated part with a Non-Metallic Scraper from the bonding surface.

NOTE: You can use a Hot-Air Blower with low heat to make the adhesive soft for an easier removal.

(b) If necessary, remove larger quantities of adhesive with Material No. 19-011 Scotch Brite Pads or with Abrasive Paper, 120 grade of grain.

(c) Clean the repair area with Material No. 11-583 Solvent or Material No. 11-010 Isopropyl Alcohol and a Material No. 19-003 Lint-Free Cotton Cloth.

(d) Let the area dry for a minimum of 30 minutes.

(e) Apply the Material No. 08-025 Two Component Polyurethane Adhesive or Material No. HELMIPUR-SH100 (V D0293) equally to the bonding area.

NOTE: If necessary, you can use a short bristled Brush or a Paint Roller.

(f) Put the new part in position and bond it to the bonding surface.

NOTE: You can use Material No. 08-074 Masking Tape to hold the part in its position.

(g) If necessary, apply pressure to the bonded part to remove air bubbles and creases and use a Spatula or equivalent to make the adhesive joint smooth.

(h) Let the adhesive cure.

(i) Remove the Material No. 08-074 Masking Tape .

(j) Remove any unwanted adhesive with Material No. 11-583 Solvent or Material No. 11-010 Isopropyl Alcohol and a Material No. 19-003 Lint-Free Cotton Cloth.

SUB TASK 25-41-51-360-006-A01

5. Replacement of the Parts which are bonded with Material No. 08-006B Adhesive General Purpose

(a) Remove the damaged or delaminated part with a Non-Metallic Scraper from the bonding surface.

NOTE: You can use a Hot-Air Blower with low heat to make the adhesive soft for an easier removal.

(b) If necessary, remove larger quantities of adhesive with Material No. 19-011 Scotch Brite Pads or with Abrasive Paper, 120 grade of grain.

(c) Clean the repair area with Material No. 11-583 Solvent or Material No. 11-010 Isopropyl Alcohol and a Material No. 19-003 Lint-Free Cotton Cloth.

(d) Let the area dry for a minimum of 30 minutes.

(e) Apply the Material No. 08-006B Adhesive General Purpose equally to the bonding area.

NOTE: You can use a short bristled Brush if necessary.

(f) Put the new part in position and bond it to the bonding surface.

NOTE: You can use Material No. 08-074 Masking Tape to hold the part in its position.

(g) If necessary, apply pressure to the bonded part to remove air bubbles and creases and use a Spatula or equivalent to make the adhesive joint smooth.

(h) Let the adhesive cure.

(i) Remove the Material No. 08-074 Masking Tape .

(j) Remove any unwanted adhesive with Material No. 11-583 Solvent or Material No. 11-010 Isopropyl Alcohol and a Material No. 19-003 Lint-Free Cotton Cloth.

SUB TASK 25-41-51-360-007-A01

6. Replacement of the Silicone Sealant made of Material No. 09-054 Silicone Sealant (1 Part) for NTF or Material No. 09-059 Silicone Sealant

NOTE: The process and material specification PMS 02-08-07 gives more data about the adhesive bonding of silicone with silicone sealant.

(a) Make sure that the replacement silicone sealant has the correct color before you do this procedure.

NOTE: The removed silicone sealant will not be serviceable.

(b) Remove the damaged or delaminated sealing seam with a Non-Metallic Scraper or a Cutter from the sealed surface.

NOTE: You can use a Hot-Air Blower with low heat to make the sealant soft for an easier removal.

(c) If necessary, remove larger quantities of adhesive with Material No. 19-011 Scotch Brite Pads or with Abrasive Paper, 120 grade of grain.

(d) Clean the repair area with Material No. 11-583 Solvent or Material No. 11-010 Isopropyl Alcohol and a Material No. 19-003 Lint-Free Cotton Cloth.

(e) Let the area dry for a minimum of 30 minutes.

(f) Apply the Material No. 09-054 Silicone Sealant (1 Part) for NTF or Material No. 09-059 Silicone Sealant with a Seal Gun equally to the area to be sealed.

(g) When you repair the floor pan, apply the Material No. 09-054 Silicone Sealant (1 Part) for NTF to the top edges of the floor pan which have contact with the lavatory housing and side wall and between the floor pan and the floor panel. Apply the Material No. 09-054 Silicone Sealant (1 Part) for NTF around the edges of the non-textile floor covering (NTF) of the floor pan.

(h) If necessary, use a Spatula or equivalent to make the sealant joint smooth.

(i) Remove any unwanted sealant with Material No. 11-583 Solvent and a Material No. 19-003 Lint-Free Cotton Cloth .

(j) Let the silicone sealant cure at room temperature.

SUB TASK 25-41-51-360-008-A01

7. Replacement of the Parts which are bonded with Adhesive Foam Tape as for instance Material No. 08-005 Sealant Tape, obsolete-use 08-005A,B,C or Material No. 08-696 - 3M SCOTCH VHB Tape 4930 or Material No. 3M SCOTCH MOUNT 4032 (V D26066)

(a) Remove the damaged part with a Non-Metallic Scraper from the bonding surface.

NOTE: You can use a Hot-Air Blower with low heat to make the adhesive soft for an easy removal.

(b) Remove the adhesive foam tape from the bonding surfaces.

(c) Clean the repair area with Material No. 11-583 Solvent or Material No. 11-010 Isopropyl Alcohol and a Material No. 19-003 Lint-Free Cotton Cloth.

(d) Cut new pieces of the Material No. 08-005 Sealing Tape, obsolete-use 08-005A,B,C or Material No. 08-696 - 3M SCOTCH VHB Tape 4930 or Material No. 3M SCOTCH MOUNT 4032 (V D26066) and remove the protection paper.

(e) Bond the adhesive foam tape to the bonding surfaces.

(f) Align the new part and bond it to its position.

(g) If necessary, apply pressure to the bonded part to remove air bubbles and creases.

SUB TASK 25-41-51-360-009-A01

8. Replacement of the Parts which are bonded with Adhesive Tape as for instance Material No. 08-082 Acrylic Pressure Sensitive Adhesive Film

(a) Remove the damaged part with a Non-Metallic Scraper from the bonding surface.

NOTE: You can use a Hot-Air Blower with low heat to make the adhesive soft for an easier removal.

(b) Remove the adhesive tape from the bonding surfaces.

(c) Clean the repair area with Material No. 11-583 Solvent or Material No. 11-010 Isopropyl Alcohol and a Material No. 19-003 Lint-Free Cotton Cloth.

(d) Cut new pieces of the Material No. 08-082 Acrylic Pressure Sensitive Adhesive Film and remove the protection paper.

(e) Bond the Material No. 08-082 Acrylic Pressure Sensitive Adhesive Film to the bonding surfaces.

(f) Align the new part and bond it to its position.

(g) If necessary, apply pressure to the bonded part to remove air bubbles and creases.

SUB TASK 25-41-51-360-010-A01

9. Replacement of the Parts which are attached with Hook/Loop Tape as for instance Material No. DAN98S2A/B or Material No. DAN98S3A/B

(a) Remove the damaged part from the bonding surface.

(b) Remove the hook/loop tape from the bonding surfaces.

(c) Clean the repair area with Material No. 11-583 Solvent or Material No. 11-010 Isopropyl Alcohol and a Material No. 19-003 Lint-Free Cotton Cloth.

(d) Cut new pieces of the hook/loop tape Material No. DAN98S2A/B or Material No. DAN98S3A/B and remove the protection paper.

(e) Bond the hook/loop tape Material No. DAN98S2A/B or Material No. DAN98-S3A/B to the bonding surfaces.

(f) Align the new part and attach it to its position.

SUB TASK 25-41-51-360-011-A01

10. Replacement of the Self-Adhesive Parts

NOTE: **The replacement procedure for the self-adhesive placards is given in Replacement of the Self-adhesive Placards.**

(a) Remove the damaged part with a Non-Metallic Scraper from the bonding surface.

NOTE: **You can use a Hot-Air Blower with low heat to make the adhesive soft for an easier removal.**

(b) Clean the repair area with Material No. 11-583 Solvent or Material No. 11-010 Isopropyl Alcohol and a Material No. 19-003 Lint-Free Cotton Cloth.

(c) Remove the protection paper from the self-adhesive part.

(d) Align the new part and bond it to its position.

TASK 25-41-51-350-802-A01

13. Replacement of the Self-adhesive Placards

A. Reason for the Job

Self explanatory.

B. Job Set-up Information

(1) Consumable Materials

REFERENCE	DESIGNATION
19-003	Lint-Free Cotton Cloth
11-010	Isopropyl Alcohol
07-023	Protective Coating, Transparent

Table 6029
Consumable Materials

(2) Fixtures, Tools, Test and Support Equipment

REFERENCE	DESIGNATION
	nonmetallic scraper

Table 6030
Fixtures, Tools, Test and Support Equipment

C. Procedure

WARNING: **BE CAREFUL WHEN YOU USE SOLVENTS/CLEANING AGENTS, SEALANTS AND OTHER MATERIALS. OBEY THE MATERIAL MANUFACTURER'S INSTRUCTIONS AND THE LOCAL REGULATIONS. MAKE SURE THAT THERE IS A GOOD FLOW OF AIR THROUGH THE WORK AREA. DO NOT BREATHE THE FUMES. DO NOT SMOKE. DO NOT USE THESE MATERIALS NEAR A FLAME, SPARKS OR SOURCES OF HEAT. USE PROTECTIVE CLOTHING, GOGGLES AND GLOVES. IF YOU GET ONE OF THESE MATERIALS ON YOUR SKIN OR IN YOUR EYES, FLUSH IT AWAY WITH A FLOW OF CLEAN WATER. IF YOU GET ONE OF THESE MATERIALS IN YOUR MOUTH, GET IMMEDIATE MEDICAL AID. IN GENERAL, THESE MATERIALS ARE POISONOUS, FLAMMABLE AND SKIN IRRITANTS.**

CAUTION: **USE ONLY THE SPECIFIED CLEANING AGENTS. CLEANING AGENTS WHICH ARE NOT SPECIFIED CAN CAUSE DAMAGE.**

SUB TASK 25-41-51-350-040-A01

1. Replacement of the Self-adhesive Placards

NOTE: **The Process and Material Specification PMS 01-06-03 gives data about installation of self-adhesive labels in non-Skydrol areas.**

NOTE: **See TABLE 6031 for the components and their replacement parts.**

IPL FIG. ITEM	COMPONENT PART NAME	IPL FIG. ITEM	REPLACEMENT PART NAME
06S-001 06S-010	Side Wall Aft Side Wall Assembly	06S-330	Placard
06S-001 06S-010	Side Wall Aft Side Wall Assembly	06S-340	Placard
06S-001 06S-010	Side Wall Aft Side Wall Assembly	06S-350	Placard
07-001 07-010	Housing Housing Assembly	07-200	Placard
07-001 07-010	Housing Housing Assembly	07-210	Placard
07A-001 07A-010	Housing Housing Assembly	07A-240	Placard
07A-001 07A-010	Housing Housing Assembly	07A-250	Placard
07B-001 07B-010	Housing Housing Assembly	07B-280	Placard

Table 6031
Placards

07B-001 07B-010	Housing Housing Assembly	07B-290	Placard
07C-001 07C-010	Housing Housing Assembly	07C-190	Placard
07C-001 07C-010	Housing Housing Assembly	07C-200	Placard
07D-001 07D-010	Housing Housing Assembly	07D-190	Placard
07D-001 07D-010	Housing Housing Assembly	07D-200	Placard
07E-001 07E-010	Housing Housing Assembly	07E-170	Placard
07E-001 07E-010	Housing Housing Assembly	07E-180	Placard
07F-001 07F-010	Housing Housing Assembly	07F-200	Placard
07F-001 07F-010	Housing Housing Assembly	07F-210	Placard
07G-001 07G-010	Housing Housing Assembly	07G-180	Placard
07G-001 07G-010	Housing Housing Assembly	07G-190	Placard
07H-001 07H-010	Housing Housing Assembly	07H-160	Placard
07H-001	Housing	07H-170	Placard

Table 6031
Placards

07H-010	Housing Assembly		
07J-001 07J-010	Housing Housing Assembly	07J-190	Placard
07J-001 07J-010	Housing Housing Assembly	07J-200	Placard
07K-001 07K-010	Housing Housing Assembly	07K-180	Placard
07K-001 07K-010	Housing Housing Assembly	07K-190	Placard
07L-001 07L-010	Housing Housing Assembly	07L-180	Placard
07L-001 07L-010	Housing Housing Assembly	07L-190	Placard
07M-001 07M-010	Housing Housing Assembly	07M-170	Placard
07M-001 07M-010	Housing Housing Assembly	07M-180	Placard
07N-001 07N-010	Housing Housing Assembly	07N-220	Placard
07N-001 07N-010	Housing Housing Assembly	07N-230	Placard
07P-001 07P-010	Housing Housing Assembly	07P-220	Placard
07P-001 07P-010	Housing Housing Assembly	07P-230	Placard

Table 6031
Placards

07Q-001 07Q-010	Housing Housing Assembly	07Q-220	Placard
07Q-001 07Q-010	Housing Housing Assembly	07Q-230	Placard
07R-001 07R-010	Housing Housing Assembly	07R-220	Placard
07R-001 07R-010	Housing Housing Assembly	07R-230	Placard
07S-001 07S-010	Housing Housing Assembly	07S-210	Placard
07S-001 07S-010	Housing Housing Assembly	07S-220	Placard
07T-001 07T-010	Housing Housing Assembly	07T-210	Placard
07T-001 07T-010	Housing Housing Assembly	07T-220	Placard
07U-001 07U-010	Housing Housing Assembly	07U-210	Placard
07U-001 07U-010	Housing Housing Assembly	07U-220	Placard
07V-001 07V-010	Housing Housing Assembly	07V-220	Placard
07V-001 07V-010	Housing Housing Assembly	07V-230	Placard
07W-001	Housing	07W-220	Placard

Table 6031
Placards

07W-010	Housing Assembly		
07W-001 07W-010	Housing Housing Assembly	07W-230	Placard
07X-001 07X-010	Housing Housing Assembly	07X-220	Placard
07X-001 07X-010	Housing Housing Assembly	07X-230	Placard
07Y-001 07Y-010	Housing Housing Assembly	07Y-250	Placard
07Y-001 07Y-010	Housing Housing Assembly	07Y-260	Placard
07Z-001 07Z-010	Housing Housing Assembly	07Z-220	Placard
07Z-001 07Z-010	Housing Housing Assembly	07Z-230	Placard
11P-001	Single Door Assembly	11P-190	Lavatory Placard
18-001 18-010	Washbasin Bin, Waste Chute and Fire Extinguisher Waste Chute	18-260	Temperature Plate
49-001 49-010	Housing Housing Assembly	49-220	Placard
49-001 49-010	Housing Housing Assembly	49-230	Placard
49A-001 49A-010	Housing Housing Assembly	49A-220	Placard

Table 6031
Placards

49A-001 49A-010	Housing Housing Assembly	49A-230	Placard
49B-001 49B-010	Housing Housing Assembly	49B-220	Placard
49B-001 49B-010	Housing Housing Assembly	49B-230	Placard
49C-001 49C-010	Housing Housing Assembly	49C-220	Placard
49C-001 49C-010	Housing Housing Assembly	49C-230	Placard

Table 6031
Placards

(b) Make a copy of the data of the damaged placard on the new placard.

(c) Replace the self-adhesive placards as follows:

1 Remove the damaged self-adhesive placard with a nonmetallic scraper.

NOTE: You can use an applicable hot-air blower to make the adhesive soft for an easy removal of the placard.

2 Make sure that the self-adhesive placard is fully removed.

WARNING: BE CAREFUL WHEN YOU USE MATERIAL NO. 11-010 ISOPROPYL ALCOHOL. OBEY THE MATERIAL MANUFACTURER'S INSTRUCTIONS.

3 Clean the repair area with the Material No. 19-003 Lint-Free Cotton Cloth made moist with Material No. 11-010 Isopropyl Alcohol .

4 Dry the repair area with the Material No. 19-003 Lint-Free Cotton Cloth.

CAUTION: DO NOT TOUCH THE BONDING SURFACES. CONTAMINATION CAN CAUSE AN UNSATISFACTORY BOND.

5 Remove the protective foil from the new self-adhesive placard.

6 Align and attach the new placard to the position of the removed damaged placard.

WARNING: BE CAREFUL WHEN YOU USE MATERIAL NO. 07-023 PROTECTIVE COATING, TRANSPARENT. OBEY THE MATERIAL MANUFACTURER'S INSTRUCTIONS.

7 If necessary apply the Material No. 07-023 Protective Coating, Transparent to the placard.

TASK 25-41-51-350-803-A01

14. Replacement of the Riveted Parts

A. Reason for the Job

Self explanatory.

B. Job Set-up Information

(1) Consumable Materials

REFERENCE	DESIGNATION
11-003	Methyl-Ethyl-Ketone
09-005A	Interfay Sealant

Table 6032
Consumable Materials

(2) Fixtures, Tools, Test and Support Equipment

REFERENCE	DESIGNATION
	vacuum cleaner

Table 6033
Fixtures, Tools, Test and Support Equipment

C. Procedure

WARNING: **BE CAREFUL WHEN YOU USE SOLVENTS/CLEANING AGENTS, SEALANTS AND OTHER MATERIALS. OBEY THE MATERIAL MANUFACTURER'S INSTRUCTIONS AND THE LOCAL REGULATIONS. MAKE SURE THAT THERE IS A GOOD FLOW OF AIR THROUGH THE WORK AREA. DO NOT BREATHE THE FUMES. DO NOT SMOKE. DO NOT USE THESE MATERIALS NEAR A FLAME, SPARKS OR SOURCES OF HEAT. USE PROTECTIVE CLOTHING, GOGGLES AND GLOVES. IF YOU GET ONE OF THESE MATERIALS ON YOUR SKIN OR IN YOUR EYES, FLUSH IT AWAY WITH A FLOW OF CLEAN WATER. IF YOU GET ONE OF THESE MATERIALS IN YOUR MOUTH, GET IMMEDIATE MEDICAL AID. IN GENERAL, THESE MATERIALS ARE POISONOUS, FLAMMABLE AND SKIN IRRITANTS.**

CAUTION: **USE ONLY THE SPECIFIED CLEANING AGENTS. CLEANING AGENTS WHICH ARE NOT SPECIFIED CAN CAUSE DAMAGE.**

CAUTION: **DO ALL THE WORK ON A CLEAN, SOFT SURFACE TO PREVENT DAMAGE TO THE COMPONENTS.**

SUB TASK 25-41-51-350-041-A01

1. Replacement of the Riveted Parts

NOTE: **See TABLE 6034 for the components and their replacement parts.**

IPL FIG. ITEM	COMPONENT PART NAME	IPL FIG. ITEM	REPLACEMENT PART NAME
06-001 06-190	Side Wall Post Assembly	06-195	Nut
06A-001 06A-210	Side Wall Post Assembly	06A-215	Nut
06B-001 06B-210	Side Wall Post Assembly	06B-215	Nut
06C-001 06C-240	Side Wall Post Assembly	06C-245	Nut
06D-001 06D-240	Side Wall Post Assembly	06D-245	Nut
06E-001 06E-240	Side Wall Post Assembly	06E-245	Nut
06F-001 06F-240	Side Wall Post Assembly	06F-245	Nut
06G-001 06G-240	Side Wall Post Assembly	06G-245	Nut
06H-001 06H-240	Side Wall Post Assembly	06H-245	Nut

Table 6034
Riveted Parts

06J-001 06J-250	Side Wall Post Assembly	06J-270	Nut
06K-001 06K-250	Side Wall Post Assembly	06K-255	Nut
06L-001 06L-250	Side Wall Post Assembly	06L-270	Nut
06M-001 06M-250	Side Wall Post Assembly	06M-270	Nut
06N-001 06N-250	Side Wall Post Assembly	06N-270	Nut
06P-001 06P-260	Side Wall Post Assembly	06P-280	Nut
06Q-001 06Q-260	Side Wall Post Assembly	06Q-280	Nut
06R-001 06R-250	Side Wall Post Assembly	06R-270	Nut
06S-001 06S-200	Side Wall Post Assembly	06S-220	Nut
06T-001 06T-250	Side Wall Post Assembly	06T-270	Nut
06U-001 06U-250	Side Wall Post Assembly	06U-255	Nut
06V-001 06V-250	Side Wall Post Assembly	06V-270	Nut
06W-001	Side Wall	06W-275	Nut

Table 6034
Riveted Parts

06W-270	Post Assembly		
06X-001 06X-250	Side Wall Post Assembly	06X-270	Nut
06Y-001 06Y-210	Side Wall Post Assembly	06Y-230	Nut
06Z-001 06Z-210	Side Wall Post Assembly	06Z-230	Nut
14-001 14-010	Door Light Lamp Cover Assembly	14-030	Part of the Double-Spring Ball Catch
14A-001 14A-010	Door Light Lamp Cover Assembly	14A-030	Part of the Double-Spring Ball Catch
14B-001 14B-010	Door Light Lamp Cover Assembly	14B-030	Part of the Double-Spring Ball Catch
15C-001 15C-200	Washbasin Unit Angle	15C-210	Nut
15D-001 15D-220	Washbasin Unit Angle	15D-230	Nut
15E-001 15E-190	Washbasin Unit Angle	15E-200	Nut
15F-001 15F-270	Washbasin Unit Angle	15F-280	Nut
15G-001 15G-270	Washbasin Unit Angle	15G-280	Nut
15H-001 15H-270	Washbasin Unit Angle	15H-280	Nut

Table 6034
Riveted Parts

15J-001 15J-270	Washbasin Unit Angle	15J-280	Nut
15K-001 15K-280	Washbasin Unit Angle	15K-290	Nut
15L-001 15L-270	Washbasin Unit Angle	15L-280	Nut
15M-001 15M-270	Washbasin Unit Angle	15M-280	Nut
15N-001 15N-270	Washbasin Unit Angle	15N-280	Nut
15P-001 15P-270	Washbasin Unit Angle	15P-280	Nut
15Q-001 15Q-250	Washbasin Unit Angle	15Q-260	Nut
15R-001 15R-270	Washbasin Unit Angle	15R-280	Nut
15S-001 15S-170	Washbasin Unit Angle	15S-180	Nut
17-001 17-060	Washbasin Unit Panel Assembly Washbasin Unit Bracket	17-100	Nut
17-001 17-150	Washbasin Unit Panel Assembly Roll Holder	17-160	Nut
17-001	Washbasin Unit Panel Assembly	17-200	Protective Plate Assembly

Table 6034
Riveted Parts

17A-001 17A-060	Washbasin Unit Panel Assembly Washbasin Unit Bracket	17A-100	Nut
17A-001 17A-140	Washbasin Unit Panel Assembly Roll Holder	17A-150	Nut
17A-001	Washbasin Unit Panel Assembly	17A-190	Protective Plate Assembly
17B-001 17B-060	Washbasin Unit Panel Assembly Washbasin Unit Bracket	17B-100	Nut
17B-001 17B-140	Washbasin Unit Panel Assembly Roll Holder	17B-150	Nut
17B-001	Washbasin Unit Panel Assembly	17B-200	Protective Plate Assembly
18-001 18-060	Washbasin Bin, Waste Chute and Fire Extinguisher Waste-Box Console Assembly	18-123	Nut
18-001 18-060	Washbasin Bin, Waste Chute and Fire Extinguisher Waste-Box Console Assembly	18-125	Nut
48-001 48-210	Side Wall Post Assembly	48-230	Nut
48A-001 48A-250	Side Wall Post Assembly	48A-270	Nut

Table 6034
Riveted Parts

48B-001 48B-260	Side Wall Post Assembly	48B-280	Nut
48C-001 48C-270	Side Wall Post Assembly	48C-290	Nut
48D-001 48D-210	Side Wall Post Assembly	48D-230	Nut
48E-001 48E-270	Side Wall Post Assembly	48E-290	Nut
48F-001 48F-270	Side Wall Post Assembly	48F-290	Nut
48G-001 48G-270	Side Wall Post Assembly	48G-290	Nut
48H-001 48H-270	Side Wall Post Assembly	48H-290	Nut
48J-001 48J-230	Side Wall Post Assembly	48J-250	Nut
48K-001 48K-270	Side Wall Post Assembly	48K-290	Nut
48L-001 48L-270	Side Wall Post Assembly	48L-290	Nut
48M-001 48M-270	Side Wall Post Assembly	48M-290	Nut

Table 6034
Riveted Parts

(b) Drill out the rivets.

NOTE: See PMS 01-04-24 for supplement information for All-rivets.

(c) Remove the rivets from the defective replacement part.

(d) Remove the replacement part.

(e) Remove the dirt from the work area with a vacuum cleaner.

WARNING: BE CAREFUL WHEN YOU USE MATERIAL NO. 11-003 METHYL-ETHYLKETONE. OBEY THE MATERIAL MANUFACTURER'S INSTRUCTIONS.

(f) Clean the work area with the Material No. 11-003 Methyl-Ethyl-Ketone .

WARNING: BE CAREFUL WHEN YOU USE MATERIAL NO. 09-005A INTERFAY SEALANT. OBEY THE MATERIAL MANUFACTURER'S INSTRUCTIONS.

(g) Apply the Material No. 09-005A Interfay Sealant to the new rivets, see PMS 01-05-47 .

WARNING: BE CAREFUL WHEN YOU USE MATERIAL NO. 09-005A INTERFAY SEALANT. OBEY THE MATERIAL MANUFACTURER'S INSTRUCTIONS.

(h) Apply the Material No. 09-005A Interfay Sealant to the mating surfaces of the component part and the new replacement part.

(i) Hold the new replacement part in position.

(j) Install the rivets.

NOTE: See PMS 01-04-24 for supplement information for All-rivets.

(k) Remove the remaining sealant.

ASSEMBLY

TASK 25-41-51-400-801-A01

D2547161903000 D2549010500000 D2549010500400 D2549010500600 D2549010500800 D2549010501000 D2549010501200 D2549010501400 D2549010501600 D2549010501800 D2549010502000 D2549010502200 D2549010502400 D2549010502600 D2549010502800 D2549010503200 D2549010503400 D2549010503600 D2549010503800 D2549010504200 D2549010504400 D2549010504600 D2549010504800 D2549010505000 D2549010505200 D2549010505400 D2549010505600 D2549010505800 D2549010506000 D2549010506200 D2549010506400 D2549010506800 D2549010507000 D2549010507200 D2549010507400 D2549010507600 D2549010507800 D2549010508000 D2549010508200 D2549010508400 D2549010508600 D2549010508800 D2549010509000 D2549010509200 D2549010511200 D2549020500000 D2549020500200 D2549020500400 D2549020500600 D2549020500800 D2549020501000 D2549020501200 D2549020501400 D2549020501600 D2549020501800 D2549020502000 D2549020502400 D2549020502600 D2549020502800 D2549020503000 D2549020503200 D2549020503400 D2549020503600 D2549020503800 D2549020504000 D2549020504200 D2549020504400 D2549020504600 D2549020504800 D2549020505000 D2549020505200 D2549020505400 D2549020505800 D2549020506000 D2549020600000 D2549020600200 D2549020600400 D2549020600800 D2549020601000 D2549020601200 D2549020601400 D2549020601600 D2549020601800 D2549020602000 D2549020602400 D2549020602600 D2549020602800 D2549020603000 D2549020603200 D2549020603400 D2549020603600 D2549020603800 D2549020604000 D2549020606400 D2549020606600 D2549020607200 D2549030500400 D2549030500600 D2549030500800 D2549030501000 D2549030501200 D2549030501400 D2549030501600 D2549030501800 D2549030502000 D2549030502200 D2549030502400 D2549030502600 D2549030502800 D2549030503000 D2549030503200 D2549030503400 D2549030503600 R225401107-000 R225401107-002 R225401115-002 R225401128-000 R225401133-000 R225401134-000 R225401139-000 R225401145-000 R225401146-000 R225401146-002 R225401188-000 R225401188-002 R225401188-004 R225401188-006

1. Assembly of the Cable Harness Assembly

   A. General

      This task gives you the installation procedures of the component.

   B. Procedure

WARNING: **BE CAREFUL WHEN YOU USE SOLVENTS/CLEANING AGENTS, SEALANTS AND OTHER MATERIALS. OBEY THE MATERIAL MANUFACTURER'S INSTRUCTIONS AND THE LOCAL REGULATIONS. MAKE SURE THAT THERE IS A GOOD FLOW OF AIR THROUGH THE WORK AREA. DO NOT BREATHE THE FUMES. DO NOT SMOKE. DO NOT USE THESE MATERIALS NEAR A FLAME, SPARKS OR SOURCES OF HEAT. USE PROTECTIVE CLOTHING, GOGGLES AND GLOVES. IF YOU GET ONE OF THESE MATERIALS ON YOUR SKIN OR IN YOUR EYES, FLUSH IT AWAY WITH A FLOW OF CLEAN WATER. IF YOU GET ONE OF THESE MATERIALS IN YOUR MOUTH, GET IMMEDIATE MEDICAL AID. IN GENERAL, THESE MATERIALS ARE POISONOUS, FLAMMABLE AND SKIN IRRITANTS.**

CAUTION: **DO ALL THE WORK ON A CLEAN, SOFT SURFACE TO PREVENT DAMAGE TO THE COMPONENTS.**

CAUTION: **MAKE SURE THAT ALL THE PARTS ARE CLEAN BEFORE YOU ASSEMBLE THEM.**

SUB TASK 25-41-51-400-075-A01

D2549010500000 D2549010500400 D2549010500600 D2549010500800
D2549020500000 D2549020500200 D2549020500400 D2549020500600
D2549020500800 D2549020501000 D2549020501800 R225401146-000

1. Assembly of the Cable Harness Assembly (27-1)

   (a) Attach the plug connector 27-430 and the connector backshell 27-440.

   (b) Attach the connector backshell 27-250, the plug connector 27-240 and the plug or the connector backshell 27-520.

   (c) Attach the plug connector 27-450, the cable bracket 27-460 and the protective cap 27-470.

   (d) Attach the housings 27-130 and the cable terminals 27-120.

   (e) Attach the splices 27-070 and the contact pins 27-080.

   (f) Attach the splices 27-070.

   (g) Attach the bracket 27-230, the connector backshell 27-180 and the receptacle connector 27-170 with the screws 27-020 and the nuts 27-220.

   (h) Attach the insulations 27-100 and the cable terminals 27-090.

   (i) Attach the housings 27-130 and the cable terminals 27-120.

(j) Attach the pre insulated terminals 27-480, 27-490, the terminal board assembly 27-410 and the cover assembly 27-420.

(k) Attach the housings 27-130, the cable terminals 27-120 and the splices 27-110.

(l) Attach the protective caps 27-160, the cable brackets 27-150, the receptacle connectors 27-140, the socket contacts 27-050 and the plugs or the plug connectors 27-510.

(m) Attach the plug connector 27-040 and the connector backshell 27-060.

(n) Attach the bracket 27-190, the connector backshell 27-030, the identification sleeve 27-370 and the receptacle connector 27-010 with the screws 27-200 and the nuts 27-220.

(o) Connect the cables, the cable terminals 27-270 and the pre insulated terminals 27-260, 27-280 to the electrical components.

SUB TASK 25-41-51-400-075-B01

D2547161903000 D2549010501000 D2549010501200 D2549010501400 D2549010501600 D2549010501800 D2549010502000 D2549010502200 D2549010502400 D2549010502600 D2549010502800 D2549010503200 D2549010503400 D2549010503600 D2549010503800 D2549010504200 D2549010504400 D2549010504600 D2549010504800 D2549010505000 D2549010505200 D2549010505400 D2549010505600 D2549010505800 D2549010506000 D2549010506200 D2549010506400 D2549010506800 D2549010507000 D2549010507200 D2549010507400 D2549010507600 D2549010507800 D2549010508000 D2549010508200 D2549010508400 D2549010508600 D2549010508800 D2549010509000 D2549010509200 D2549010511200 D2549020501200 D2549020501400 D2549020501600 D2549020502000 D2549020502400 D2549020502600 D2549020502800 D2549020503000 D2549020503200 D2549020503400 D2549020503600 D2549020503800 D2549020504000 D2549020504200 D2549020504400 D2549020504600 D2549020504800 D2549020505000 D2549020505200 D2549020505400 D2549020505800 D2549020506000 D2549020600000 D2549020600200 D2549020600400 D2549020600800 D2549020601000 D2549020601200 D2549020601400 D2549020601600 D2549020601800 D2549020602000 D2549020602400 D2549020602600 D2549020602800 D2549020603000 D2549020603200 D2549020603400 D2549020603600 D2549020603800 D2549020604000 D2549020606400 D2549020606600 D2549020607200 D2549030500400 D2549030500600 D2549030500800 D2549030501000 D2549030501200 D2549030501400 D2549030501600 D2549030501800 D2549030502000 D2549030502200 D2549030502400 D2549030502600 D2549030502800 D2549030503000 D2549030503200 D2549030503400 D2549030503600 R225401107-000 R225401107-002 R225401115-002 R225401128-000 R225401133-000 R225401134-000 R225401139-000 R225401145-

000 R225401146-002 R225401188-000 R225401188-002 R225401188-004 R225401188-006

2. Assembly of the Cable Harness Assembly (27-1)

(a) Attach the plug connector 27-430 and the connector backshell 27-440.

(b) Attach the connector backshell 27-250, the plug connector 27-240 and the plug or the connector backshell 27-520.

(c) Attach the plug connector 27-450, the cable bracket 27-460 and the protective cap 27-470.

(d) Attach the housings 27-130 and the cable terminals 27-120.

(e) Attach the splices 27-070 and the contact pins 27-080.

(f) Attach the splices 27-070.

(g) Attach the bracket 27-230, the connector backshell 27-180 and the receptacle connector 27-170 with the screws 27-020 and the nuts 27-220.

(h) Attach the insulations 27-100 and the cable terminals 27-090.

(i) Attach the housings 27-130 and the cable terminals 27-120.

(j) Attach the pre insulated terminals 27-480, 27-490, the terminal board assembly 27-410 and the cover assembly 27-420.

(k) Attach the housings 27-130, the cable terminals 27-120 and the splices 27-110.

(l) Attach the protective caps 27-160, the cable brackets 27-150, the receptacle connectors 27-140, the socket contacts 27-050 and the plugs or the plug connectors 27-510.

(m) Attach the plug connector 27-040 and the connector backshell 27-060.

(n) Attach the bracket 27-190, the connector backshell 27-030, the identification sleeve 27-370 and the receptacle connector 27-010 with the screws 27-200 and the nuts 27-220.

(o) Connect the cables to the electrical components.

TASK 25-41-51-400-801-B01

D2549010509400 D2549010509600 D2549010509800 D2549010510000 D2549010510200
D2549010510400 D2549010510800 D2549010511000 D2549010511400 D2549010511600
D2549010511800 D2549010512000 D2549010512200 D2549010512400 D2549010512600
D2549010513000 D2549010513200 D2549010513400 D2549010513600 D2549010513800
D2549010514000 D2549010514200 D2549010514400 D2549010514600 D2549010514800
D2549010600000 D2549010600200 D2549010600400 D2549010600600 D2549010600800
D2549010601000 D2549010601200 D2549010601400 D2549010601600 D2549010601800
D2549010602000 D2549010602200 D2549010602400 D2549010602600 D2549010602800
D2549010603000 D2549010603200 D2549010603400 D2549010603600 D2549010603800
D2549010604400 D2549010604600 D2549010604800 D2549020506200 D2549020506400
D2549020506600 D2549020506800 D2549020507000 D2549020507200 D2549020602200
D2549020604200 D2549020604400 D2549020604600 D2549020604800 D2549020605000
D2549020605200 D2549020605400 D2549020605600 D2549020606000 D2549020606800
D2549020607000 D2549020607400 D2549020607600 D2549020607800 D2549020608200
D2549020608400 D2549020608600 D2549020608800 D2549020609000 D2549020609200
D2549020609400 D2549020609600 D2549020609800 D2549020610000 D2549020610200
D2549020610400 D2549020610600 D2549020610800 D2549020611000 D2549020611200
D2549020611400 D2549020611600 D2549020611800 D2549020612000 D2549020612200
D2549020612400 D2549020612600 D2549020612800 D2549020613000 D2549020613200
D2549020613600 D2549020613800 D2549020614000 D2549020614400 D2549020614600
D2549020614800 D2549020700000 D2549020700400 D2549020700600 D2549020700800
D2549020701000 D2549020701200 D2549020701400 D2549020701800 D2549020702000
D2549020702200 D2549020702400 D2549020702600 D2549020702800 D2549020703200
D2549020703400 D2549020703600 D2549020703800 D2549020704000 D2549020704200
D2549020704400 D2549020704600 D2549020704800 D2549020705000 D2549020705200
D2549020705400 D2549020705600 D2549020706000 D2549020706200 D2549020706400
D2549020706600 D2549020706800 D2549020707000 D2549020707200 D2549020707400
D2549020707600 D2549020707800 D2549020710000 D2549020710200 D2549020710800
D2549020711000 D2549020711200 D2549020711400 D2549020712000 D2549020712200
D2549020712400 D2549030504000 D2549030504200 D2549030504600 D2549030504800
D2549030505200 D2549030505400 D2549030505600 D2549030505800 D2549030506000
D2549030506200 D2549030506400 D2549030506600 D2549030506800 D2549030507000
D2549030507200 D2549030507400 D2549030507600 D2549030507800 D2549030508000
D2549030508200 D2549030508400 D2549030508600 D2549030508800 D2549030509000
D2549030509200 D2549030509400 D2549030509600 D2549030509800 D2549030510000
D2549030510200 D2549030510400 D2549030510600 D2549030510800 D2549030511000
D2549030511200 D2549030511400 D2549030511600 D2549030511800 D2549030512000
D2549030512200 D2549030512400 D2549030512800 D2549030513000 D2549030513200
D2549030513400 D2549030513600 D2549030513800 D2549030514000 D2549030514200
D2549030514400 D2549030514600 D2549030514800 D2549030600000 D2549030600400
D2549030600600 D2549030600800 D2549030601000 D2549030601200 D2549030601400
D2549030603400 D2549030603600 D2549030603800 D2549030604400 D2549030604600
D2549030604800 D2549030605000 D2549030605800 R225401107-004 R225401134-002
R225401134-004 R225401134-006 R225401134-016 R225401134-018 R225401134-020
R225401136-010 R225401136-016 R225401136-020 R225401137-000 R225401137-002
R225401137-004 R225401137-006 R225401137-008 R225401137-010 R225401137-012

R225401137-014 R225401142-000 R225401142-002 R225401145-002 R225401145-012
R225401152-000 R225401152-002 R225401153-000 R225401159-000 R225401160-000
R225401160-002 R225401168-004 R225401168-006 R225401168-016 R225401168-018
R225401172-002 R225401172-004 R225401172-006 R225401172-010 R225401175-000
R225401175-002 R225401176-000 R225401195-000 R225401196-000 R225401196-046
R225401600-000 R225401603-000

2. Assembly of the Cable Harness Assembly

A. General

This task gives you the installation procedures of the component.

B. Procedure

WARNING: BE CAREFUL WHEN YOU USE SOLVENTS/CLEANING AGENTS, SEALANTS AND OTHER MATERIALS. OBEY THE MATERIAL MANUFACTURER'S INSTRUCTIONS AND THE LOCAL REGULATIONS. MAKE SURE THAT THERE IS A GOOD FLOW OF AIR THROUGH THE WORK AREA. DO NOT BREATHE THE FUMES. DO NOT SMOKE. DO NOT USE THESE MATERIALS NEAR A FLAME, SPARKS OR SOURCES OF HEAT. USE PROTECTIVE CLOTHING, GOGGLES AND GLOVES. IF YOU GET ONE OF THESE MATERIALS ON YOUR SKIN OR IN YOUR EYES, FLUSH IT AWAY WITH A FLOW OF CLEAN WATER. IF YOU GET ONE OF THESE MATERIALS IN YOUR MOUTH, GET IMMEDIATE MEDICAL AID. IN GENERAL, THESE MATERIALS ARE POISONOUS, FLAMMABLE AND SKIN IRRITANTS.

CAUTION: DO ALL THE WORK ON A CLEAN, SOFT SURFACE TO PREVENT DAMAGE TO THE COMPONENTS.

CAUTION: MAKE SURE THAT ALL THE PARTS ARE CLEAN BEFORE YOU ASSEMBLE THEM.

SUB TASK 25-41-51-400-076-A01

1. Assembly of the Cable Harness Assembly (27A-1)

(a) Attach the plug connector 27A-220, the plug 27A-400, the connector backshell 27A-230 and the cable ties 27A-360.

(b) Attach the receptacle connector 27A-170, the connector backshell 27A-180 and the bracket 27A-210 with the screws 27A-020 and the nuts 27A-380.

(c) Attach the cable terminals 27A-120 and the housings 27A-130.

(d) Attach the splices 27A-070 and the contact pins 27A-080.

(e) Attach the splices 27A-070.

(f) Attach the cable terminals 27A-090 and the insulations 27A-100.

(g) Attach the cable terminals 27A-120 and the housings 27A-130.

(h) Attach the splices 27A-110, the cable terminals 27A-120 and the housings 27A-130.

(i) Attach the socket contacts 27A-050, the receptacle connectors 27A-140, the cable brackets 27A-150, the protective caps 27A-160 and the identification ties 27A-350.

(j) Attach the plug connector 27A-040 and the connector backshell 27A-060.

(k) Attach the receptacle connector 27A-010, the identification sleeve 27A-320, the connector backshell 27A-030, the plugs 27A-390 and the bracket 27A-190 with the screws 27A-200 and the nuts 27A-380.

(l) Connect the cables to the electrical components.

TASK 25-41-51-400-801-C01

D2549010604000 D2549010604200 D2549010605600 D2549020701600 D2549020708600 D2549020708800 D2549020709000 D2549020709200 D2549020709400 D2549020709800 D2549020710400 D2549020712600 D2549020712800 D2549020713400 D2549020713600 D2549020714400 D2549030601600 D2549030601800 D2549030602000 D2549030602200 D2549030602400 D2549030602600 D2549030602800 D2549030603000 D2549030605200 R225401134-022 R225401152-004 R225401168-014 R225401168-028 R225401172-008 R225401600-002

3. Assembly of the Cable Harness Assembly

A. General

This task gives you the installation procedures of the component.

B. Procedure

WARNING: BE CAREFUL WHEN YOU USE SOLVENTS/CLEANING AGENTS, SEALANTS AND OTHER MATERIALS. OBEY THE MATERIAL MANUFACTURER'S INSTRUCTIONS AND THE LOCAL REGULATIONS. MAKE SURE THAT THERE IS A GOOD FLOW OF AIR THROUGH THE WORK AREA. DO NOT BREATHE THE FUMES. DO NOT SMOKE. DO NOT USE THESE MATERIALS NEAR A FLAME, SPARKS OR SOURCES OF HEAT. USE PROTECTIVE CLOTHING, GOGGLES AND GLOVES. IF YOU GET ONE OF THESE MATERIALS ON YOUR SKIN OR IN YOUR EYES, FLUSH IT AWAY WITH A FLOW OF CLEAN WATER. IF YOU GET ONE OF THESE MATERIALS IN YOUR MOUTH, GET IMMEDIATE MEDICAL AID. IN GENERAL, THESE MATERIALS ARE POISONOUS, FLAMMABLE AND SKIN IRRITANTS.

CAUTION: DO ALL THE WORK ON A CLEAN, SOFT SURFACE TO PREVENT DAMAGE TO THE COMPONENTS.

CAUTION: MAKE SURE THAT ALL THE PARTS ARE CLEAN BEFORE YOU ASSEMBLE THEM.

SUB TASK 25-41-51-400-077-A01

1. Assembly of the Cable Harness Assembly (27B-1)

(a) Attach the plug connector 27B-220, the plug 27B-400, the connector backshell 27B-230 and the cable ties 27B-360.

(b) Attach the receptacle connector 27B-170, the connector backshell 27B-180 and the bracket 27B-210 with the screws 27B-020 and the nuts 27B-380.

(c) Attach the cable terminals 27B-120 and the housings 27B-130.

(d) Attach the splices 27B-070 and the contact pins 27B-080.

(e) Attach the splices 27B-070.

(f) Attach the cable terminals 27B-090 and the insulations 27B-100.

(g) Attach the cable terminals 27B-120 and the housings 27B-130.

(h) Attach the connector 27B-410 and the spring latch 27B-420.

(i) Attach the splices 27B-110, the cable terminals 27B-120 and the housings 27B-130.

(j) Attach the socket contacts 27B-050, the receptacle connectors 27B-140, the cable brackets 27B-150, the protective caps 27B-160 and the identification ties 27B-350.

(k) Attach the plug connector 27B-040 and the connector backshell 27B-060.

(l) Attach the receptacle connector 27B-010, the identification sleeve 27B-320, the connector backshell 27B-030, the plugs 27B-390 and the bracket 27B-190 with the screws 27B-200 and the nuts 27B-380.

(m) Connect the cables to the electrical components.

TASK 25-41-51-400-801-D01

D2549010400000 D2549010400200 D2549010400400 D2549010400600 D2549010400800
D2549010402000 D2549010402600 D2549010402800 D2549010403000 D2549010605000
D2549010605200 D2549010605800 D2549010606000 D2549010606200 D2549010606400
D2549010606600 D2549010606800 D2549010607000 D2549010607200 D2549010607400
D2549010607600 D2549010607800 D2549010608200 D2549010608400 D2549010608600
D2549010608800 D2549010609000 D2549010609200 D2549010609400 D2549010609600
D2549010609800 D2549010610000 D2549010610200 D2549010610400 D2549010610800
D2549010611000 D2549010611200 D2549010611400 D2549010611600 D2549010611800
D2549010612000 D2549010612200 D2549010612400 D2549010612600 D2549010613000
D2549010613200 D2549010613400 D2549010613800 D2549010614200 D2549010614400
D2549010614600 D2549010614800 D2549020400000 D2549020400200 D2549020400400
D2549020403800 D2549020404200 D2549020404400 D2549020404600 D2549020404800
D2549020405000 D2549020405200 D2549020405400 D2549020405600 D2549020405800
D2549020406200 D2549020502200 D2549020505600 D2549020507400 D2549020507600
D2549020508000 D2549020508200 D2549020508400 D2549020508600 D2549020508800
D2549020509000 D2549020509200 D2549020509600 D2549020509800 D2549020510000
D2549020510400 D2549020510600 D2549020510800 D2549020511000 D2549020511200
D2549020511600 D2549020511800 D2549020512000 D2549020512200 D2549020512400
D2549020512600 D2549020512800 D2549020513000 D2549020513200 D2549020513400
D2549020513600 D2549020513800 D2549020514000 D2549020514200 D2549020514400
D2549020514600 D2549020514800 D2549020705800 D2549020708000 D2549020709600
D2549020710600 D2549020711600 D2549020713000 D2549020713200 D2549020713800
D2549020714000 D2549020714600 D2549020800000 D2549020800200 D2549020800400
D2549020800600 D2549020800800 D2549020801000 D2549020801200 D2549020801400
D2549020801600 D2549020801800 D2549020802000 D2549020802200 D2549020802400
D2549020802600 D2549020802800 D2549020803000 D2549020803200 D2549020803400
D2549020803600 D2549020803800 D2549020804000 D2549020804200 D2549020804800
D2549020805000 D2549020805200 D2549020805400 D2549020805600 D2549020805800
D2549020806000 D2549020806200 D2549020806400 D2549020806600 D2549020806800
D2549020807000 D2549020807400 D2549020807600 D2549020807800 D2549020808200
D2549020808400 D2549020808600 D2549020808800 D2549020809000 D2549020809400
D2549020809800 D2549020810000 D2549020810200 D2549020810400 D2549020810600
D2549020810800 D2549020811200 D2549020811400 D2549020811600 D2549020811800
D2549020812000 D2549020812200 D2549020812400 D2549020812600 D2549020813000
D2549020813200 D2549020813400 D2549020813600 D2549020813800 D2549020814000
D2549020814200 D2549020814400 D2549020814600 D2549020814800 D2549030400000
D2549030400200 D2549030400400 D2549030400600 D2549030401000 D2549030401200
D2549030401400 D2549030401600 D2549030401800 D2549030402000 D2549030402200
D2549030402400 D2549030402600 D2549030402800 D2549030403000 D2549030403400
D2549030403600 D2549030403800 D2549030404000 D2549030404200 D2549030404400
D2549030404600 D2549030404800 D2549030405000 D2549030405200 D2549030405400
D2549030405600 D2549030405800 D2549030406000 D2549030406400 D2549030406600
D2549030406800 D2549030407000 D2549030407200 D2549030407400 D2549030407600
D2549030407800 D2549030408000 D2549030408200 D2549030408400 D2549030408600
D2549030409800 D2549030410400 D2549030503800 D2549030600200 D2549030603200
D2549030604200 D2549030605400 D2549030605600 D2549030606000 D2549030606200

D2549030606400 D2549030606600 D2549030606800 D2549030607000 D2549030607200 D2549030607400 D2549030607600 D2549030607800 D2549030608000 D2549030608200 D2549030608400 D2549030608600 D2549030608800 D2549030609000 D2549030609200 D2549030609800 D2549030610000 D2549030610400 D2549030610600 D2549030611000 D2549030611200 D2549030611400 D2549030611600 D2549030611800 D2549030612000 D2549030612200 D2549030612400 D2549030612600 D2549030612800 D2549030613200 D2549030613400 D2549030613600 D2549030613800 D2549030614000 D2549030614200 D2549030614400 D2549030614600 D2549030614800 R225401115-000 R225401134-008 R225401134-010 R225401134-012 R225401134-024 R225401134-026 R225401134-028 R225401134-030 R225401134-032 R225401134-034 R225401134-036 R225401136-000 R225401136-004 R225401136-018 R225401136-022 R225401137-016 R225401145-004 R225401145-006 R225401145-008 R225401145-010 R225401145-014 R225401152-006 R225401152-008 R225401168-000 R225401168-002 R225401168-008 R225401168-010 R225401168-012 R225401168-020 R225401168-022 R225401168-024 R225401168-026 R225401172-000 R225401172-012 R225401172-014 R225401172-016 R225401172-018 R225401183-000 R225401183-002 R225401183-008 R225401192-000 R225401192-002 R225401196-002 R225401196-004 R225401196-006 R225401196-008 R225401196-010 R225401196-012 R225401196-014 R225401196-016 R225401196-034 R225401196-036 R225401196-038 R225401196-040 R225401196-044 R225401196-048 R225401196-050 R225401196-052 R225401196-054 R225401196-056 R225401196-058 R225401196-060 R225401196-062 R225401199-000 R225401199-002 R225401199-004 R225401199-006 R225401199-008 R225401199-010 R225401600-004 R225401605-000 R225401605-002 R225401609-000 R225401611-006 R225401611-008 R225401611-010 R225401611-012 R225401613-000 R225401614-000 R225401618-000 R225401618-002 R225401619-000 R225401619-002 R225401622-000 R225401622-002 R225401625-000 R225401629-000 R225401629-002 R225401639-000 R225401639-002 R225401643-000 R225401643-002 R225401643-004 R225401646-000 R225401647-000 R225401648-000 R225401648-002 R225401656-000 R225401656-002 R225401658-000 R225401662-000 R225401662-002 R225401693-000

4. Assembly of the Cable Harness Assembly

A. General

This task gives you the installation procedures of the component.

B. Procedure

WARNING: **BE CAREFUL WHEN YOU USE SOLVENTS/CLEANING AGENTS, SEALANTS AND OTHER MATERIALS. OBEY THE MATERIAL MANUFACTURER'S INSTRUCTIONS AND THE LOCAL REGULATIONS. MAKE SURE THAT THERE IS A GOOD FLOW OF AIR THROUGH THE WORK AREA. DO NOT BREATHE THE FUMES. DO NOT SMOKE. DO NOT USE THESE MATERIALS NEAR A FLAME, SPARKS OR SOURCES OF HEAT. USE PROTECTIVE CLOTHING, GOGGLES AND GLOVES. IF YOU GET ONE OF THESE MATERIALS ON YOUR SKIN OR IN YOUR EYES, FLUSH IT AWAY WITH A FLOW OF CLEAN WATER. IF YOU GET ONE OF THESE MATERIALS IN YOUR MOUTH, GET IMMEDIATE MEDICAL AID. IN GENERAL, THESE MATERIALS ARE POISONOUS, FLAMMABLE AND SKIN IRRITANTS.**

CAUTION: **DO ALL THE WORK ON A CLEAN, SOFT SURFACE TO PREVENT DAMAGE TO THE COMPONENTS.**

CAUTION: **MAKE SURE THAT ALL THE PARTS ARE CLEAN BEFORE YOU ASSEMBLE THEM.**

SUB TASK 25-41-51-400-078-A01

1. Assembly of the Cable Harness Assembly (27C-1)

   (a) Attach the plug 27C-400, the plug connector 27C-220, the connector backshell 27C-230 and the cable ties 27C-360.

   (b) Attach the receptacle connector 27C-170, the connector backshell 27C-180 and the bracket 27C-210 with the screws 27C-020 and the nuts 27C-380.

   (c) Attach the cable terminals 27C-120 and the housings 27C-130.

   (d) Attach the splices 27C-070 and the contact pins 27C-080.

   (e) Attach the splices 27C-070.

   (f) Attach the cable terminals 27C-090 and the insulations 27C-100.

   (g) Attach the cable terminals 27C-120 and the housings 27C-130.

   (h) Attach the connector 27C-410 and the spring latch 27C-420.

   (i) Attach the splices 27C-110, the cable terminals 27C-120 and the housings 27C-130.

   (j) Attach the socket contacts 27C-050, the receptacle connectors 27C-140, the cable brackets 27C-150, the protective caps 27C-160 and the identification ties 27C-350.

(k) Attach the plug connector 27C-040 and the connector backshell 27C-060.

(l) Attach the receptacle connector 27C-010, the identification sleeve 27C-320, the connector backshell 27C-030, the plugs 27C-390 and the bracket 27C-190 with the screws 27C-200 and the nuts 27C-380.

(m) Connect the cables to the electrical components.

TASK 25-41-51-400-801-E01

D2549010405200 D2549010405600 D2549020301600 D2549020411200 D2549020412000 D2549020412200 D2549020412400 D2549020413200 D2549020413600 D2549020413800 D2549020414000 D2549020414600 D2549020414800 D2549020507800 D2549020605800 D2549020708200 D2549020708400 D2549020812800 D2549030409600 D2549030410800 D2549030413000 D2549030414000 D2549030414200 D2549030414600 D2549030700000 D2549030700600 D2549030700800 D2549030701400 D2549030701600 D2549030701800 D2549030702000 D2549030702200 D2549030702400 D2549030702800 D2549030703000 D2549030703200 D2549030703800 D2549030704000 D2549030704600 D2549030704800 D2549030705600 D2549040500200 D2549040500400 D2549040500600 D2549040500800 D2549040501000 D2549040501200 D2549040501400 D2549040501600 D2549040501800 D2549040502000 R225401136-008 R225401136-014 R225401611-020 R225401671-000 R225401671-002 R225401673-000 R225401673-002 R225401673-004 R225401673-006 R225401691-000 R225401691-002 R225401697-000 R225401697-002 R225401803-000 R225401803-002 R225401808-000 R225401814-000

5. Assembly of the Cable Harness Assembly

A. General

This task gives you the installation procedures of the component.

B. Procedure

WARNING: BE CAREFUL WHEN YOU USE SOLVENTS/CLEANING AGENTS, SEALANTS AND OTHER MATERIALS. OBEY THE MATERIAL MANUFACTURER'S INSTRUCTIONS AND THE LOCAL REGULATIONS. MAKE SURE THAT THERE IS A GOOD FLOW OF AIR THROUGH THE WORK AREA. DO NOT BREATHE THE FUMES. DO NOT SMOKE. DO NOT USE THESE MATERIALS NEAR A FLAME, SPARKS OR SOURCES OF HEAT. USE PROTECTIVE CLOTHING, GOGGLES AND GLOVES. IF YOU GET ONE OF THESE MATERIALS ON YOUR SKIN OR IN YOUR EYES, FLUSH IT AWAY WITH A FLOW OF CLEAN WATER. IF YOU GET ONE OF THESE MATERIALS IN YOUR MOUTH, GET IMMEDIATE MEDICAL AID. IN GENERAL, THESE MATERIALS ARE POISONOUS, FLAMMABLE AND SKIN IRRITANTS.

CAUTION: DO ALL THE WORK ON A CLEAN, SOFT SURFACE TO PREVENT DAMAGE TO THE COMPONENTS.

CAUTION: MAKE SURE THAT ALL THE PARTS ARE CLEAN BEFORE YOU ASSEMBLE THEM.

SUB TASK 25-41-51-400-079-A01

D2549010405200 D2549010405600 D2549020301600 D2549020411200 D2549020412000 D2549020412200 D2549020412400 D2549020413200 D2549020413600 D2549020413800 D2549020414000 D2549020414600

D2549020414800 D2549020507800 D2549020605800 D2549020708200 D2549020708400 D2549020812800 D2549030409600 D2549030410800 D2549030413000 D2549030414000 D2549030414200 D2549030414600 D2549030700000 D2549030700800 D2549030701400 D2549030701600 D2549030701800 D2549030702000 D2549030702200 D2549030702400 D2549030702800 D2549030703000 D2549030703200 D2549030703800 D2549030704000 D2549030704600 D2549030704800 D2549030705600 D2549040500200 D2549040500400 D2549040500600 D2549040500800 D2549040501000 D2549040501200 D2549040501400 D2549040501600 D2549040501800 D2549040502000 R225401136-008 R225401136-014 R225401611-020 R225401671-000 R225401671-002 R225401673-000 R225401673-002 R225401673-004 R225401673-006 R225401691-000 R225401691-002 R225401697-000 R225401697-002 R225401803-000 R225401803-002 R225401808-000 R225401814-000

1. Assembly of the Cable Harness Assembly (27D-1)

   (a) Attach the plugs 27D-390, the plug connector 27D-410, the connector backshell 27D-420 and the cable ties 27D-400.

   (b) Attach the cable terminals 27D-140 and the housings 27D-150.

   (c) Attach the receptacle connector 27D-270, the connector backshell 27D-280 and the bracket 27D-290 with the nuts 27D-300.

   (d) Attach the cable terminals 27D-160 and the insulations 27D-170.

   (e) Attach the cable terminals 27D-140 and the housings 27D-150.

   (f) Attach the identification sleeves 27D-130, the modules 27D-180, 27D-190, the rail 27D-200, the end clamps 27D-210 and the plugs 27D-220.

   (g) Attach the socket contacts 27D-050, the receptacle connector 27D-100, the connector 27D-080, the spring latches 27D-090, the cable bracket 27D-110, the protective cap 27D-120 and the identification ties 27D-030.

   (h) Attach the splices 27D-010, the contact pins 27D-020, the identification ties 27D-030, the socket contacts 27D-050, 27D-330, the connector backshell 27D-060, the plug connector 27D-070, the relay 27D-310, the base 27D-320 and the angle 27D-340.

   (i) Attach the receptacle connector 27D-520, the identification sleeves 27D-130, 27D-580, the connector backshell 27D-530, the plugs 27D-220, the labels 27D-570, the cable ties 27D-590 and the bracket 27D-540 with the screws 27D-550 and the nuts 27D-300.

(j) Connect the cables to the electrical components.

SUB TASK 25-41-51-400-079-B01
D2549030700600

2. Assembly of the Cable Harness Assembly (27D-1)

(a) Attach the plugs 27D-390, the plug connector 27D-410, the connector backshell 27D-420 and the cable ties 27D-400.

(b) Attach the cable terminals 27D-140 and the housings 27D-150.

(c) Attach the receptacle connector 27D-270, the connector backshell 27D-280 and the bracket 27D-290 with the nuts 27D-300.

(d) Attach the cable terminals 27D-160 and the insulations 27D-170.

(e) Attach the cable terminals 27D-140 and the housings 27D-150.

(f) Attach the identification sleeves 27D-130, the modules 27D-180, 27D-190, the rail 27D-200, the end clamps 27D-210 and the plugs 27D-220.

(g) Attach the socket contacts 27D-050, the receptacle connector 27D-100, the connector 27D-080, the spring latches 27D-090, the cable bracket 27D-110, the protective cap 27D-120 and the identification ties 27D-030.

(h) Attach the splices 27D-010, the contacts 27D-020, the identification ties 27D-030, the socket contacts 27D-050, 27D-330, the connector backshell 27D-060, the plug connector 27D-070, the relay 27D-310, the base 27D-320 and the angle 27D-340.

(i) Attach the receptacle connector 27D-520, the identification sleeves 27D-130, the connector backshell 27D-530, the plugs 27D-220, the labels 27D-570, the cable ties 27D-590 and the bracket 27D-540 with the screws 27D-550 and the nuts 27D-300.

(j) Connect the cables to the electrical components.

TASK 25-41-51-400-801-F01

D2547160900200 D2547160900400 D2549010401000 D2549010401400 D2549010401600
D2549010401800 D2549010402400 D2549010403200 D2549010403400 D2549010403600
D2549010403800 D2549010404000 D2549010404200 D2549010404400 D2549010404600
D2549010404800 D2549010405000 D2549010405400 D2549010405800 D2549010406000
D2549010406200 D2549010406400 D2549010406800 D2549010407000 D2549010510600
D2549010610600 D2549010613600 D2549020300000 D2549020300400 D2549020300600
D2549020300800 D2549020301000 D2549020301800 D2549020302000 D2549020302800
D2549020400600 D2549020400800 D2549020401000 D2549020401200 D2549020401400
D2549020401600 D2549020402000 D2549020402200 D2549020402400 D2549020402600
D2549020403000 D2549020403200 D2549020403400 D2549020403600 D2549020404000
D2549020406000 D2549020406400 D2549020406600 D2549020406800 D2549020407000
D2549020407200 D2549020407400 D2549020407600 D2549020407800 D2549020408000
D2549020408200 D2549020408600 D2549020408800 D2549020409000 D2549020409200
D2549020409400 D2549020409600 D2549020409800 D2549020410200 D2549020410400
D2549020410600 D2549020410800 D2549020411000 D2549020411400 D2549020411600
D2549020411800 D2549020412600 D2549020412800 D2549020413000 D2549020413400
D2549020414200 D2549020700200 D2549020804400 D2549020807200 D2549020809600
D2549030409000 D2549030409200 D2549030409400 D2549030410000 D2549030410200
D2549030410600 D2549030411200 D2549030411400 D2549030411600 D2549030411800
D2549030412000 D2549030412200 D2549030412400 D2549030412600 D2549030412800
D2549030413200 D2549030413400 D2549030413600 D2549030414400 D2549030414800
D2549030500200 D2549030610200 D2549030700200 D2549030700400 D2549030701000
D2549030701200 D2549030702600 D2549030703400 D2549030703600 D2549030704200
D2549030704400 D2549030705200 R225401134-014 R225401134-038 R225401136-006
R225401136-012 R225401136-024 R225401152-010 R225401183-004 R225401183-006
R225401196-018 R225401196-020 R225401196-022 R225401196-024 R225401196-042
R225401196-064 R225401196-066 R225401196-068 R225401196-070 R225401199-012
R225401602-000 R225401611-000 R225401611-014 R225401611-016 R225401611-018
R225401624-000 R225401627-000 R225401627-002 R225401627-004 R225401643-006
R225401643-008 R225401646-002 R225401648-004 R225401648-006 R225401648-008
R225401649-000 R225401675-000 R225401683-000 R225401685-000 R225401685-002
R225401688-000 R225401689-004 R225401689-006 R225401811-000

6. Assembly of the Cable Harness Assembly

A. General

This task gives you the installation procedures of the component.

B. Procedure

WARNING: **BE CAREFUL WHEN YOU USE SOLVENTS/CLEANING AGENTS, SEALANTS AND OTHER MATERIALS. OBEY THE MATERIAL MANUFACTURER'S INSTRUCTIONS AND THE LOCAL REGULATIONS. MAKE SURE THAT THERE IS A GOOD FLOW OF AIR THROUGH THE WORK AREA. DO NOT BREATHE THE FUMES. DO NOT SMOKE. DO NOT USE THESE MATERIALS NEAR A FLAME, SPARKS OR SOURCES OF HEAT. USE PROTECTIVE CLOTHING, GOGGLES AND GLOVES. IF YOU GET ONE OF THESE MATERIALS ON YOUR SKIN OR IN YOUR EYES, FLUSH IT AWAY WITH A FLOW OF CLEAN WATER. IF YOU GET ONE OF THESE MATERIALS IN YOUR MOUTH, GET IMMEDIATE MEDICAL AID. IN GENERAL, THESE MATERIALS ARE POISONOUS, FLAMMABLE AND SKIN IRRITANTS.**

CAUTION: **DO ALL THE WORK ON A CLEAN, SOFT SURFACE TO PREVENT DAMAGE TO THE COMPONENTS.**

CAUTION: **MAKE SURE THAT ALL THE PARTS ARE CLEAN BEFORE YOU ASSEMBLE THEM.**

SUB TASK 25-41-51-400-080-A01

D2547160900200 D2547160900400 D2549010401000 D2549010401400 D2549010401600 D2549010401800 D2549010402400 D2549010403400 D2549010403600 D2549010404200 D2549010404400 D2549010405400 D2549010406000 D2549010406200 D2549010406400 D2549010406800 D2549010613600 D2549020300000 D2549020300400 D2549020300600 D2549020300800 D2549020301000 D2549020301800 D2549020302000 D2549020302800 D2549020400600 D2549020401000 D2549020401200 D2549020401400 D2549020402000 D2549020402400 D2549020402600 D2549020403200 D2549020403400 D2549020403600 D2549020404000 D2549020406000 D2549020406400 D2549020406600 D2549020407000 D2549020407400 D2549020407600 D2549020407800 D2549020408000 D2549020408600 D2549020408800 D2549020409000 D2549020409200 D2549020409400 D2549020409600 D2549020409800 D2549020410400 D2549020410600 D2549020411000 D2549020411400 D2549020411600 D2549020412600 D2549020413000 D2549020413400 D2549020700200 D2549020804400 D2549020807200 D2549020809600 D2549030409200 D2549030410000 D2549030410200 D2549030410600 D2549030411200 D2549030411400 D2549030411600 D2549030411800 D2549030412400 D2549030412600 D2549030413200 D2549030413600 D2549030414400 D2549030414800 D2549030700200 D2549030700400 D2549030701000 D2549030702600 D2549030703400 D2549030703600 R225401136-006 R225401136-012 R225401136-024 R225401152-010 R225401196-018 R225401196-020 R225401196-022 R225401196-024 R225401196-042 R225401196-064 R225401196-066 R225401196-068 R225401196-070 R225401199-012 R225401602-000 R225401611-000 R225401611-014 R225401611-016 R225401611-018 R225401627-000 R225401627-002 R225401627-004 R225401643-006 R225401643-008 R225401648-004 R225401648-

006 R225401648-008 R225401649-000 R225401675-000 R225401683-000 R225401688-000

1. Assembly of the Cable Harness Assembly (27E-1)

   (a) Attach the plug connector 27E-290, the connector backshell 27E-300 and the cable ties 27E-280.

   (b) Attach the cable terminals 27E-120 and the housings 27E-130.

   (c) Attach the receptacle connector 27E-210, the connector backshell 27E-220 and the bracket 27E-230 with the nuts 27E-240.

   (d) Attach the cable terminals 27E-140 and the insulations 27E-150.

   (e) Attach the cable terminals 27E-120 and the housings 27E-130.

   (f) Attach the identification sleeves 27E-110, the modules 27E-160, 27E-170, the rail 27E-180, the end clamps 27E-190 and the plugs 27E-200.

   (g) Attach the socket contacts 27E-050, the receptacle connector 27E-080, the cable bracket 27E-090, the protective cap 27E-100 and the identification ties 27E-030.

   (h) Attach the splices 27E-010, the contact pins 27E-020, the identification ties 27E-030, the socket contacts 27E-050, the connector backshell 27E-060 and the plug connector 27E-070.

   (i) Attach the receptacle connector 27E-400, the identification sleeves 27E-110, 27E-460, the connector backshell 27E-410, the plugs 27E-200, the labels 27E-450, the cable ties 27E-470 and the bracket 27E-420 with the screws 27E-430 and the nuts 27E-240.

   (j) Connect the cables to the electrical components.

SUB TASK 25-41-51-400-080-B01

D2549010403200 D2549010403800 D2549010404000 D2549010404600 D2549010404800 D2549010405000 D2549010405800 D2549010407000 D2549010510600 D2549010610600 D2549020400800 D2549020401600 D2549020402200 D2549020403000 D2549020406800 D2549020407200 D2549020408200 D2549020410200 D2549020410800 D2549020411800 D2549020412800 D2549020414200 D2549030409000 D2549030409400 D2549030412000 D2549030412200 D2549030412800 D2549030413400 D2549030610200 D2549030701200 D2549030704200 D2549030704400 D2549030705200 R225401134-014 R225401134-038 R225401183-004 R225401183-

006 R225401624-000 R225401646-002 R225401685-000 R225401685-002 R225401689-004 R225401689-006 R225401811-000

2. Assembly of the Cable Harness Assembly (27E-1)

(a) Attach the plug connector 27E-290, the connector backshell 27E-300 and the cable ties 27E-280.

(b) Attach the cable terminals 27E-120 and the housings 27E-130.

(c) Attach the receptacle connector 27E-210, the connector backshell 27E-220 and the bracket 27E-230 with the nuts 27E-240.

(d) Attach the cable terminals 27E-140 and the insulations 27E-150.

(e) Attach the cable terminals 27E-120 and the housings 27E-130.

(f) Attach the identification sleeves 27E-110, the modules 27E-160, 27E-170, the rail 27E-180, the end clamps 27E-190 and the plugs 27E-200.

(g) Attach the socket contacts 27E-560, the connector 27E-530, the spring latches 27E-540 and the backshell 27E-550.

(h) Attach the socket contacts 27E-050, the receptacle connector 27E-080, the cable bracket 27E-090, the protective cap 27E-100 and the identification ties 27E-030.

(i) Attach the splices 27E-010, the contact pins 27E-020, the identification ties 27E-030, the socket contacts 27E-050, the connector backshell 27E-060 and the plug connector 27E-070.

(j) Attach the receptacle connector 27E-400, the identification sleeves 27E-110, 27E-460, the connector backshell 27E-410, the plugs 27E-200, the labels 27E-450, the cable ties 27E-470 and the bracket 27E-420 with the screws 27E-430 and the nuts 27E-240.

(k) Connect the cables to the electrical components.

SUB TASK 25-41-51-400-080-C01
D2549030500200

3. Assembly of the Cable Harness Assembly

(a) Not applicable.

TASK 25-41-51-400-801-G01
D2549010402200 R225401676-000

7. Assembly of the Cable Harness Assembly

A. General

- Not applicable

B. Procedure

SUB TASK 25-41-51-400-081-A01
1. Assembly of the Cable Harness Assembly

(a) Not applicable.

TASK 25-41-51-400-802-A01

D2547161903000 D2549010500000 D2549010500400 D2549010500600 D2549010500800 D2549010501000 D2549010501200 D2549010501400 D2549010501600 D2549010502000 D2549010502600 D2549010502800 D2549010503200 D2549010503400 D2549010503600 D2549010503800 D2549010504200 D2549010504400 D2549010504600 D2549010504800 D2549010505000 D2549010505200 D2549010505400 D2549010505600 D2549010505800 D2549010506000 D2549010506200 D2549010506400 D2549010506800 D2549010507000 D2549010507200 D2549010507400 D2549010507600 D2549010507800 D2549010508400 D2549010508600 D2549010508800 D2549010509200 D2549010511200 D2549020500200 D2549020500400 D2549020500800 D2549020501600 D2549020502000 D2549020502400 D2549020502600 D2549020502800 D2549020503000 D2549020503400 D2549020503600 D2549020503800 D2549020504000 D2549020504200 D2549020504400 D2549020504600 D2549020505000 D2549020505400 D2549020505800 D2549020600000 D2549020600200 D2549020600400 D2549020600800 D2549020601000 D2549020601200 D2549020601400 D2549020601600 D2549020601800 D2549020602000 D2549020602400 D2549020602600 D2549020603000 D2549020603200 D2549020603400 D2549020603600 D2549020603800 D2549020604000 D2549020606400 D2549020606600 D2549020607200 D2549030500200 D2549030500600 D2549030500800 D2549030501000 D2549030501400 D2549030501600 D2549030502000 D2549030502200 D2549030502600 D2549030502800 D2549030503000 D2549030503200 D2549030503400 D2549030503600 R225401107-000 R225401107-002 R225401115-002 R225401128-000 R225401133-000 R225401139-000 R225401146-000 R225401146-002 R225401188-004 R225401188-006

8. Assembly of the Electrical System

A. General

This task gives you the installation procedures of the component.

B. Job Set-up Information

(1) Not applicable

C. Procedure

WARNING: BE CAREFUL WHEN YOU USE SOLVENTS/CLEANING AGENTS, SEALANTS AND OTHER MATERIALS. OBEY THE MATERIAL MANUFACTURER'S INSTRUCTIONS AND THE LOCAL REGULATIONS. MAKE SURE THAT THERE IS A GOOD FLOW OF AIR THROUGH THE WORK AREA. DO NOT BREATHE THE FUMES. DO NOT SMOKE. DO NOT USE THESE MATERIALS NEAR A FLAME, SPARKS OR SOURCES OF HEAT. USE PROTECTIVE CLOTHING, GOGGLES AND GLOVES. IF YOU GET ONE OF THESE MATERIALS ON YOUR SKIN OR IN YOUR EYES, FLUSH IT AWAY WITH A FLOW OF CLEAN WATER. IF YOU GET ONE OF THESE MATERIALS IN YOUR MOUTH, GET IMMEDIATE MEDICAL AID. IN GENERAL, THESE MATERIALS ARE POISONOUS, FLAMMABLE AND SKIN IRRITANTS.

CAUTION: **DO ALL THE WORK ON A CLEAN, SOFT SURFACE TO PREVENT DAMAGE TO THE COMPONENTS.**

CAUTION: **MAKE SURE THAT ALL THE PARTS ARE CLEAN BEFORE YOU ASSEMBLE THEM.**

SUB TASK 25-41-51-440-008-A01
D2549020606600

1. Assembly of the Electrical System (26-1)

   (a) Attach the microswitch 26-150 with the screws 26-230.

   (b) Attach the sheet 26-470 with the screws 26-480, 26-490 and the nuts 26-500.

   (c) Attach the screws 26-440, the washers 26-450 and the nuts 26-460 to the lavatory structure.

   (d) Attach the screws 26-120 and the washers 26-030 to the lavatory structure.

   (e) Attach the loudspeaker 26-140 to the lavatory structure.

   NOTE: **For further instructions, see CMMV 23-31-12_D7320 (loudspeaker).**

   (f) Install and assemble the light assembly 26-130 as follows:

   NOTE: **For further instructions, see CMMV 33-24-05_DD704 (light assembly).**

      1 Attach the lamp 26-138, the incandescent lamp 26-137, the housing 26-135 and the lens 26-133.

   (g) Attach the call light 26-100 to the lavatory structure.

   NOTE: **For further instructions, see CMMV 33-20-01_DD704 (call light).**

   (h) Attach the brackets 26-110 to the lavatory structure.

   (i) Attach the smoke detector sealing 26-050 and the smoke detector 26-020 with the screws 26-040 and the washers 26-030 to the lavatory structure.

   NOTE: **For further instructions, see CMMV 26-17-15_F4885 (smoke detector).**

   (j) See Assembly of the Cable Harness Assembly for the assembly procedure of the cable harness assembly 26-010.

(k) Connect the cables, the applicable bonding straps 26-260, 26-270, 26-280, 26-290, 26-300, 26-310, 26-340 and the cable harness assembly 26-010 to the electrical components.

(l) Attach the nuts 26-390 and the washers 26-380 to the lavatory structure.

(m) Attach the screws 26-350, 26-360, the washers 26-380, the lock washers 26-410 and the nuts 26-400 to the lavatory structure.

(n) Attach the clamps 26-420, 26-430 with the screws 26-350, 26-360, the washers 26-380, the lock washers 26-410 and the nuts 26-400 to the lavatory structure.

SUB TASK 25-41-51-440-008-B01
D2549030500200

2. Assembly of the Electrical System (26-1)

(a) Attach the microswitch 26-150 with the screws 26-230.

(b) Attach the sheet 26-470 with the screws 26-480, 26-490 and the nuts 26-500.

(c) Attach the screws 26-440, the washers 26-450 and the nuts 26-460 to the lavatory structure.

(d) Attach the screws 26-120 and the washers 26-030 to the lavatory structure.

(e) Attach the loudspeaker 26-140 to the lavatory structure.

NOTE: For further instructions, see CMMV 23-31-12_D7320 (loudspeaker).

(f) Install and assemble the light assembly 26-130 as follows:

NOTE: For further instructions, see CMMV 33-24-05_DD704 (light assembly).

1 Attach the lamp 26-138, the incandescent lamp 26-137, the housing 26-135 and the lens 26-133.

(g) Attach the call light 26-100 to the lavatory structure.

NOTE: For further instructions, see CMMV 33-20-01_DD704 (call light).

(h) Attach the brackets 26-110 to the lavatory structure.

(i) Attach the smoke detector sealing 26-050 and the smoke detector 26-020 with the screws 26-040 and the washers 26-030 to the lavatory structure.

NOTE: For further instructions, see CMMV 26-16-16_F4885 (smoke detector).

(j) Connect the cables and the applicable bonding straps 26-260, 26-280, 26-290, 26-300, 26-310, 26-340 to the electrical components.

(k) Attach the bonding straps 26-320, 26-330 with the screws 26-370 to the electrical components.

(l) Attach the nuts 26-390 and the washers 26-380 to the lavatory structure.

(m) Attach the screws 26-350, 26-360, the washers 26-380, the lock washers 26-410 and the nuts 26-400 to the lavatory structure.

(n) Attach the clamps 26-420, 26-430 with the screws 26-350, 26-360, the washers 26-380, the lock washers 26-410 and the nuts 26-400 to the lavatory structure.

SUB TASK 25-41-51-440-008-C01
D2549010506800 D2549020600400 D2549020601400 D2549020601600 R225401128-000 R225401133-000

3. Assembly of the Electrical System (26-1)

(a) Attach the microswitch 26-150 with the screws 26-230.

(b) Attach the sheet 26-470 with the screws 26-480, 26-490 and the nuts 26-500.

(c) Attach the screws 26-440, the washers 26-450 and the nuts 26-460 to the lavatory structure.

(d) Attach the screws 26-120 and the washers 26-030 to the lavatory structure.

(e) Attach the loudspeaker 26-140 to the lavatory structure.

NOTE: For further instructions, see CMMV 23-31-12_D7320 (loudspeaker).

(f) Install and assemble the light assembly 26-130 as follows:

NOTE: For further instructions, see CMMV 33-24-05_DD704 (light assembly).

1 Attach the lamp 26-138, the incandescent lamp 26-137, the housing 26-135 and the lens 26-133.

(g) Attach the call light 26-100 to the lavatory structure.

NOTE: For further instructions, see CMMV 33-20-01_DD704 (call light).

(h) Attach the brackets 26-110 to the lavatory structure.

(i) Attach the smoke detector sealing 26-050 and the smoke detector 26-020 with the screws 26-040 and the washers 26-030 to the lavatory structure.

NOTE: For further instructions, see CMMV 26-17-15_F4885 (smoke detector).

(j) See Assembly of the Cable Harness Assembly for the assembly procedure of the cable harness assembly 26-010.

(k) Connect the cables, the applicable bonding straps 26-260, 26-270, 26-280, 26-300, 26-310, 26-340 and the cable harness assembly 26-010 to the electrical components.

(l) Attach the bonding straps 26-320, 26-330 with the screws 26-370 to the electrical components.

(m) Attach the nuts 26-390 and the washers 26-380 to the lavatory structure.

(n) Attach the screws 26-350, 26-360, the washers 26-380, the lock washers 26-410 and the nuts 26-400 to the lavatory structure.

(o) Attach the clamps 26-420, 26-430 with the screws 26-350, 26-360, the washers 26-380, the lock washers 26-410 and the nuts 26-400 to the lavatory structure.

SUB TASK 25-41-51-440-008-D01
D2549020603600 D2549020604000

4. Assembly of the Electrical System (26-1)

(a) Attach the microswitch 26-150 with the screws 26-230.

(b) Attach the sheet 26-470 with the screws 26-480, 26-490 and the nuts 26-500.

(c) Attach the screws 26-440, the washers 26-450 and the nuts 26-460 to the lavatory structure.

(d) Attach the screws 26-120 and the washers 26-030 to the lavatory structure.

(e) Attach the loudspeaker 26-140 to the lavatory structure.

NOTE: For further instructions, see CMMV 23-31-12_D7320 (loudspeaker).

(f) Install and assemble the light assembly 26-130 as follows:

NOTE: For further instructions, see CMMV 33-24-05_DD704 (light assembly).

1 Attach the lamp 26-138, the incandescent lamp 26-137, the housing 26-135 and the lens 26-133.

(g) Attach the call light 26-100 to the lavatory structure.

NOTE: For further instructions, see CMMV 33-20-01_DD704 (call light).

(h) Attach the brackets 26-110 to the lavatory structure.

(i) Attach the smoke detector sealing 26-050 and the smoke detector 26-020 with the screws 26-040 and the washers 26-030 to the lavatory structure.

NOTE: For further instructions, see CMMV 26-17-15_F4885 (smoke detector).

(j) See Assembly of the Cable Harness Assembly for the assembly procedure of the cable harness assembly 26-010.

(k) Connect the cables, the applicable bonding straps 26-260, 26-280, 26-290, 26-300, 26-310, 26-340 and the cable harness assembly 26-010 to the electrical components.

(l) Attach the bonding straps 26-320, 26-330 with the screws 26-370 to the electrical components.

(m) Attach the nuts 26-390 and the washers 26-380 to the lavatory structure.

(n) Attach the screws 26-350, 26-360, the washers 26-380, the lock washers 26-410 and the nuts 26-400 to the lavatory structure.

(o) Attach the clamps 26-420, 26-430 with the screws 26-350, 26-360, the washers 26-380, the lock washers 26-410 and the nuts 26-400 to the lavatory structure.

SUB TASK 25-41-51-440-008-E01
D2549010501000 D2549010501200 D2549010501600 D2549010502600

D2549010502800 D2549020501600 D2549020502000 D2549020502400 R225401107-000

5. Assembly of the Electrical System (26-1)

(a) Install and assemble the microswitch 26-150 as follows:

1 Attach the door contact switch 26-160 with the screws 26-180 to the support angle 26-220.

2 Attach the threaded bushings 26-190 and the guide 26-200 with the screws 26-170.

WARNING: BE VERY CAREFUL WHEN YOU REMOVE OR INSTALL THE SPRING. BECAUSE THERE IS REMAINING TENSION IN THE SPRING, IT CAN CAUSE YOU INJURY.

3 Attach the spring 26-210.

4 Attach the microswitch 26-150 with the screws 26-230.

(b) Attach the sheet 26-470 with the screws 26-480, 26-490 and the nuts 26-500.

(c) Attach the screws 26-440, the washers 26-450 and the nuts 26-460 to the lavatory structure.

(d) Attach the screws 26-120 and the washers 26-030 to the lavatory structure.

(e) Attach the loudspeaker 26-140 to the lavatory structure.

NOTE: For further instructions, see CMMV 23-31-12_D7320 (loudspeaker).

(f) Install and assemble the light assembly 26-130 as follows:

NOTE: For further instructions, see CMMV 33-24-05_DD704 (light assembly).

1 Attach the lamp 26-138, the incandescent lamp 26-137, the housing 26-135 and the lens 26-133.

(g) Attach the call light 26-100 to the lavatory structure.

NOTE: For further instructions, see CMMV 33-20-01_DD704 (call light).

(h) Attach the brackets 26-110 to the lavatory structure.

(i) Attach the smoke detector sealing 26-050 and the smoke detector 26-020 with the screws 26-040 and the washers 26-030 to the lavatory structure.

NOTE: For further instructions, see CMMV 26-17-17_F4885 (smoke detector).

(j) See Assembly of the Cable Harness Assembly for the assembly procedure of the cable harness 26-010.

(k) Connect the cables, the applicable bonding straps 26-260, 26-270, 26-280, 26-290, 26-300, 26-310, 26-340 and the cable harness 26-010 to the electrical components.

(l) Attach the bonding straps 26-320, 26-330 with the screws 26-370 to the electrical components.

(m) Attach the nuts 26-390 and the washers 26-380 to the lavatory structure.

(n) Attach the screws 26-350, 26-360, the washers 26-380, the lock washers 26-410 and the nuts 26-400 to the lavatory structure.

(o) Attach the clamps 26-420, 26-430 with the screws 26-350, 26-360, the washers 26-380, the lock washers 26-410 and the nuts 26-400 to the lavatory structure.

SUB TASK 25-41-51-440-008-F01

D2547161903000 D2549010502000 D2549010503200 D2549010503600 D2549010503800 D2549010504200 D2549010504400 D2549010504600 D2549010504800 D2549010505000 D2549010505200 D2549010505400 D2549010505600 D2549010505800 D2549010506000 D2549010506400 D2549010507200 D2549010507400 D2549010507600 D2549010507800 D2549010508400 D2549010508600 D2549010508800 D2549010509200 D2549010511200 D2549020502600 D2549020503000 D2549020503400 D2549020503600 D2549020503800 D2549020504000 D2549020504200 D2549020504400 D2549020504600 D2549020505000 D2549020505400 D2549020505800 D2549020600800 D2549020601000 D2549020601200 D2549020601800 D2549020602000 D2549020602400 D2549020602600 D2549020603000 D2549020603200 D2549020603400 D2549020603800 D2549020606400 D2549020607200 D2549030500600 D2549030500800 D2549030501000 D2549030501400 D2549030501600 D2549030502000 D2549030502200 D2549030502600 D2549030502800 D2549030503000 D2549030503200 D2549030503400 D2549030503600 R225401107-002 R225401115-002 R225401139-000 R225401188-004 R225401188-006

6. Assembly of the Electrical System (26-1)

(a) Attach the nut 26-650 and the washer 26-640 to the lavatory.

(b) Attach the micro switch 26-150 with the screws 26-230.

(c) Attach the sheet 26-470 with the screws 26-480, 26-490 and the nuts 26-500.

(d) Attach the screws 26-440, the washers 26-450 and the nuts 26-460 to the lavatory structure.

(e) Attach the screws 26-120 and the washers 26-030 to the lavatory structure.

(f) Attach the loudspeaker 26-140 to the lavatory structure.

NOTE: For further instructions, see CMMV 23-31-12_D7320 (loudspeaker).

(g) Install and assemble the light assembly 26-130 as follows:

NOTE: For further instructions, see CMMV 33-24-05_DD704 (light assembly).

1 Attach the lamp 26-138, the incandescent lamp 26-137, the housing 26-135 and the lens 26-133.

(h) Attach the call light 26-100 to the lavatory structure.

NOTE: For further instructions, see CMMV 33-20-01_DD704 (call light).

(i) Attach the brackets 26-110 to the lavatory structure.

(j) Attach the smoke detector sealing 26-050 and the smoke detector 26-020 with the screws 26-040 and the washers 26-030 to the lavatory structure.

NOTE: For further instructions, see CMMV 26-17-15_F4885 (smoke detector).

(k) See Assembly of the Cable Harness Assembly for the assembly procedure of the cable harness assembly 26-010.

(l) Connect the cables, the applicable bonding straps 26-260, 26-270, 26-280, 26-290, 26-300, 26-310, 26-340 and the cable harness assembly 26-010 to the electrical components.

(m) Attach the bonding straps 26-320, 26-330 with the screws 26-370 to the electrical components.

(n) Attach the nuts 26-390 and the washers 26-380 to the lavatory structure.

(o) Attach the screws 26-350, 26-360, the washers 26-380, the lock washers 26-410 and the nuts 26-400 to the lavatory structure.

(p) Attach the clamps 26-420, 26-430 with the screws 26-350, 26-360, the washers 26-380, the lock washers 26-410 and the nuts 26-400 to the lavatory structure.

SUB TASK 25-41-51-440-008-G01
D2549020600000 D2549020600200

7. Assembly of the Electrical System (26-1)

(a) Attach the microswitch 26-150 with the screws 26-230.

(b) Attach the sheet 26-470 with the screws 26-480, 26-490 and the nuts 26-500.

(c) Attach the screws 26-440, the washers 26-450 and the nuts 26-460 to the lavatory structure.

(d) Attach the screws 26-120 and the washers 26-030 to the lavatory structure.

(e) Install and assemble the 2065VU switch panel 26-510 as follows:

1 Attach the switch button switch 26-610 to the printed circuit board PCB 26-580.

2 Attach the protective lens 26-620 to the switch button switch 26-610.

3 Install and assemble the switch housing assembly 26-520 as follows:
a Attach the switch housing 26-530 with the screws 26-590 and the spring washers 26-600 to the printed circuit board PCB 26-580.

4 Attach the plugs 26-630 to the printed circuit board PCB 26-580.

(f) Attach the loudspeaker 26-140 to the lavatory structure.

NOTE: For further instructions, see CMMV 23-31-12_D7320 (loudspeaker).

(g) Install and assemble the light assembly 26-130 as follows:

NOTE: For further instructions, see CMMV 33-24-05_DD704 (light assembly).

1 Attach the lamp 26-138, the incandescent lamp 26-137, the housing 26-135 and the lens 26-133.

(h) Attach the call light 26-100 to the lavatory structure.

NOTE: For further instructions, see CMMV 33-20-01_DD704 (call light).

(i) Attach the brackets 26-110 to the lavatory structure.

(j) Attach the smoke detector sealing 26-050 and the smoke detector 26-020 with the screws 26-040 and the washers 26-030 to the lavatory structure.

NOTE: For further instructions, see CMMV 26-17-15_F4885 (smoke detector).

(k) See Assembly of the Cable Harness Assembly for the assembly procedure of the cable harness assembly 26-010.

(l) Connect the cables, the applicable bonding straps 26-260, 26-270, 26-280, 26-290, 26-300, 26-310, 26-340 and the cable harness assembly 26-010 to the electrical components.

(m) Attach the bonding straps 26-320, 26-330 with the screws 26-370 to the electrical components.

(n) Attach the nuts 26-390 and the washers 26-380 to the lavatory structure.

(o) Attach the screws 26-350, 26-360, the washers 26-380, the lock washers 26-410 and the nuts 26-400 to the lavatory structure.

(p) Attach the clamps 26-420, 26-430 with the screws 26-350, 26-360, the washers 26-380, the lock washers 26-410 and the nuts 26-400 to the lavatory structure.

SUB TASK 25-41-51-440-008-H01
D2549010500400

8. Assembly of the Electrical System (26-1)

(a) Install and assemble the microswitch 26-150 as follows:

1 Attach the door contact switch 26-160 with the screws 26-180 to the support angle 26-220.

2 Attach the threaded bushings 26-190 and the guide 26-200 with the screws 26-170.

WARNING: **BE VERY CAREFUL WHEN YOU REMOVE OR INSTALL THE SPRING. BECAUSE THERE IS REMAINING TENSION IN THE SPRING, IT CAN CAUSE YOU INJURY.**

3 Attach the spring 26-210.

4 Attach the microswitch 26-150 with the screws 26-230.

(b) Attach the sheet 26-470 with the screws 26-480, 26-490 and the nuts 26-500.

(c) Attach the screws 26-440, the washers 26-450 and the nuts 26-460 to the lavatory structure.

(d) Attach the screws 26-120 and the washers 26-030 to the lavatory structure.

(e) Attach the loudspeaker 26-140 to the lavatory structure.

NOTE: **For further instructions, see CMMV 23-31-12_D7320 (loudspeaker).**

(f) Install and assemble the light assembly 26-130 as follows:

NOTE: **For further instructions, see CMMV 33-24-05_DD704 (light assembly).**

1 Attach the lamp 26-138, the incandescent lamp 26-137, the housing 26-135 and the lens 26-133.

(g) Attach the call light 26-100 to the lavatory structure.

NOTE: **For further instructions, see CMMV 33-20-01_DD704 (call light).**

(h) Attach the brackets 26-110 to the lavatory structure.

(i) Attach the smoke detector sealing 26-050 and the smoke detector 26-020 with the screws 26-040 and the washers 26-030 to the lavatory structure.

NOTE: **For further instructions, see CMMV 26-17-17_F4885 (smoke detector).**

(j) See Assembly of the Cable Harness Assembly for the assembly procedure of the cable harness 26-010.

(k) Connect the cables, the applicable bonding straps 26-260, 26-270, 26-280, 26-290, 26-300, 26-310, 26-340 and the cable harness 26-010 to the electrical components.

(l) Attach the nuts 26-390 and the washers 26-380 to the lavatory structure.

(m) Attach the screws 26-350, 26-360, the washers 26-380, the lock washers 26-410 and the nuts 26-400 to the lavatory structure.

(n) Attach the clamps 26-420, 26-430 with the screws 26-350, 26-360, the washers 26-380, the lock washers 26-410 and the nuts 26-400 to the lavatory structure.

SUB TASK 25-41-51-440-008-J01
D2549020502800

9. Assembly of the Electrical System (26-1)

(a) Install and assemble the microswitch 26-150 as follows:

1 Attach the door contact switch 26-160 with the screws 26-180 to the support angle 26-220.

2 Attach the threaded bushings 26-190 and the guide 26-200 with the screws 26-170.

WARNING: BE VERY CAREFUL WHEN YOU REMOVE OR INSTALL THE SPRING. BECAUSE THERE IS REMAINING TENSION IN THE SPRING, IT CAN CAUSE YOU INJURY.

3 Attach the spring 26-210.

4 Attach the microswitch 26-150 with the screws 26-230.

(b) Attach the sheet 26-470 with the screws 26-480, 26-490 and the nuts 26-500.

(c) Attach the screws 26-440, the washers 26-450 and the nuts 26-460 to the lavatory structure.

(d) Attach the screws 26-120 and the washers 26-030 to the lavatory structure.

(e) Attach the loudspeaker 26-140 to the lavatory structure.

NOTE: For further instructions, see CMMV 23-31-12_D7320 (loudspeaker).

(f) Install and assemble the light assembly 26-130 as follows:

NOTE: For further instructions, see CMMV 33-24-05_DD704 (light assembly).

1 Attach the lamp 26-138, the incandescent lamp 26-137, the housing 26-135 and the lens 26-133.

(g) Attach the call light 26-100 to the lavatory structure.

NOTE: For further instructions, see CMMV 33-20-01_DD704 (call light).

(h) Attach the brackets 26-110 to the lavatory structure.

(i) Attach the smoke detector sealing 26-050 and the smoke detector 26-020 with the screws 26-040 and the washers 26-030 to the lavatory structure.

NOTE: For further instructions, see CMMV 26-17-15_F4885 (smoke detector).

(j) See Assembly of the Cable Harness Assembly for the assembly procedure of the cable harness 26-010.

(k) Connect the cables, the applicable bonding straps 26-260, 26-270, 26-280, 26-290, 26-300, 26-310, 26-340 and the cable harness 26-010 to the electrical components.

(l) Attach the bonding strap 26-330 with the screws 26-370 to the electrical components.

(m) Attach the nuts 26-390 and the washers 26-380 to the lavatory structure.

(n) Attach the screws 26-350, 26-360, the washers 26-380, the lock washers 26-410 and the nuts 26-400 to the lavatory structure.

(o) Attach the clamps 26-420, 26-430 with the screws 26-350, 26-360, the washers 26-380, the lock washers 26-410 and the nuts 26-400 to the lavatory structure.

SUB TASK 25-41-51-440-008-K01
D2549010501400 R225401146-002

10. Assembly of the Electrical System (26-1)

(a) Install and assemble the microswitch 26-150 as follows:

1 Attach the door contact switch 26-160 with the screws 26-180 to the support angle 26-220.

2 Attach the threaded bushings 26-190 and the guide 26-200 with the screws 26-170.

WARNING: **BE VERY CAREFUL WHEN YOU REMOVE OR INSTALL THE SPRING. BECAUSE THERE IS REMAINING TENSION IN THE SPRING, IT CAN CAUSE YOU INJURY.**

3 Attach the spring 26-210.

4 Attach the microswitch 26-150 with the screws 26-230.

(b) Attach the sheet 26-470 with the screws 26-480, 26-490 and the nuts 26-500.

(c) Attach the screws 26-440, the washers 26-450 and the nuts 26-460 to the lavatory structure.

(d) Attach the screws 26-120 and the washers 26-030 to the lavatory structure.

(e) Attach the loudspeaker 26-140 to the lavatory structure.

NOTE: **For further instructions, see CMMV 23-31-12_D7320 (loudspeaker).**

(f) Install and assemble the light assembly 26-130 as follows:

NOTE: **For further instructions, see CMMV 33-24-05_DD704 (light assembly).**

1 Attach the lamp 26-138, the incandescent lamp 26-137, the housing 26-135 and the lens 26-133.

(g) Attach the call light 26-100 to the lavatory structure.

NOTE: **For further instructions, see CMMV 33-20-01_DD704 (call light).**

(h) Attach the brackets 26-110 to the lavatory structure.

(i) Attach the smoke detector sealing 26-050 and the smoke detector 26-020 with the screws 26-040 and the washers 26-030 to the lavatory structure.

NOTE: **For further instructions, see CMMV 26-16-16_F4885 (smoke detector).**

(j) See Assembly of the Cable Harness Assembly for the assembly procedure of the cable harness 26-010.

(k) Connect the cables, the applicable bonding straps 26-260, 26-270, 26-280, 26-290, 26-300, 26-310, 26-340 and the cable harness 26-010 to the electrical components.

(l) Attach the bonding strap 26-320 with the screws 26-370 to the electrical components.

(m) Attach the nuts 26-390 and the washers 26-380 to the lavatory structure.

(n) Attach the screws 26-350, 26-360, the washers 26-380, the lock washers 26-410 and the nuts 26-400 to the lavatory structure.

(o) Attach the clamps 26-420, 26-430 with the screws 26-350, 26-360, the washers 26-380, the lock washers 26-410 and the nuts 26-400 to the lavatory structure.

SUB TASK 25-41-51-440-008-L01
D2549010500600 R225401146-000

11. Assembly of the Electrical System (26-1)

(a) Install and assemble the microswitch 26-150 as follows:

1 Attach the door contact switch 26-160 with the screws 26-180 to the support angle 26-220.

2 Attach the threaded bushings 26-190 and the guide 26-200 with the screws 26-170.

WARNING: BE VERY CAREFUL WHEN YOU REMOVE OR INSTALL THE SPRING. BECAUSE THERE IS REMAINING TENSION IN THE SPRING, IT CAN CAUSE YOU INJURY.

3 Attach the spring 26-210.

4 Attach the microswitch 26-150 with the screws 26-230.

(b) Attach the sheet 26-470 with the screws 26-480, 26-490 and the nuts 26-500.

(c) Attach the screws 26-440, the washers 26-450 and the nuts 26-460 to the lavatory structure.

(d) Attach the screws 26-120 and the washers 26-030 to the lavatory structure.

(e) Attach the loudspeaker 26-140 to the lavatory structure.

NOTE: For further instructions, see CMMV 23-31-12_D7320 (loudspeaker).

(f) Install and assemble the light assembly 26-130 as follows:

NOTE: For further instructions, see CMMV 33-24-05_DD704 (light assembly).

1 Attach the lamp 26-138, the incandescent lamp 26-137, the housing 26-135 and the lens 26-133.

(g) Attach the call light 26-100 to the lavatory structure.

NOTE: For further instructions, see CMMV 33-20-01_DD704 (call light).

(h) Attach the brackets 26-110 to the lavatory structure.

(i) Attach the smoke detector sealing 26-050 and the smoke detector 26-020 with the screws 26-040 and the washers 26-030 to the lavatory structure.

NOTE: For further instructions, see CMMV 26-16-16_F4885 (smoke detector).

(j) See Assembly of the Cable Harness Assembly for the assembly procedure of the cable harness 26-010.

(k) Connect the cables, the applicable bonding straps 26-260, 26-270, 26-280, 26-290, 26-300, 26-310, 26-340 and the cable harness 26-010 to the electrical components.

(l) Attach the nuts 26-390 and the washers 26-380 to the lavatory structure.

(m) Attach the screws 26-350, 26-360, the washers 26-380, the lock washers 26-410 and the nuts 26-400 to the lavatory structure.

(n) Attach the clamps 26-420, 26-430 with the screws 26-350, 26-360, the washers 26-380, the lock washers 26-410 and the nuts 26-400 to the lavatory structure.

SUB TASK 25-41-51-440-008-M01
D2549010503400 D2549010506200 D2549010507000

12. Assembly of the Electrical System (26-1)

(a) Attach the microswitch 26-150 with the screws 26-230.

(b) Attach the sheet 26-470 with the screws 26-480, 26-490 and the nuts 26-500.

(c) Attach the screws 26-440, the washers 26-450 and the nuts 26-460 to the lavatory structure.

(d) Attach the screws 26-120 and the washers 26-030 to the lavatory structure.

(e) Attach the loudspeaker 26-140 to the lavatory structure.

NOTE: For further instructions, see CMMV 23-31-12_D7320 (loudspeaker).

(f) Install and assemble the light assembly 26-130 as follows:

NOTE: For further instructions, see CMMV 33-24-05_DD704 (light assembly).

1 Attach the lamp 26-138, the incandescent lamp 26-137, the housing 26-135 and the lens 26-133.

(g) Attach the call light 26-100 to the lavatory structure.

NOTE: For further instructions, see CMMV 33-20-01_DD704 (call light).

(h) Attach the brackets 26-110 to the lavatory structure.

(i) Attach the smoke detector sealing 26-050 and the smoke detector 26-020 with the screws 26-040 and the washers 26-030 to the lavatory structure.

NOTE: For further instructions, see CMMV 26-17-17_F4885 (smoke detector).

(j) See Assembly of the Cable Harness Assembly for the assembly procedure of the cable harness assembly 26-010.

(k) Connect the cables, the applicable bonding straps 26-260, 26-270, 26-280, 26-290, 26-300, 26-310, 26-340 and the cable harness assembly 26-010 to the electrical components.

(l) Attach the bonding straps 26-320, 26-330 with the screws 26-370 to the electrical components.

(m) Attach the nuts 26-390 and the washers 26-380 to the lavatory structure.

(n) Attach the screws 26-350, 26-360, the washers 26-380, the lock washers 26-410 and the nuts 26-400 to the lavatory structure.

(o) Attach the clamps 26-420, 26-430 with the screws 26-350, 26-360, the washers 26-380, the lock washers 26-410 and the nuts 26-400 to the lavatory structure.

SUB TASK 25-41-51-440-008-N01
D2549010500000 D2549010500800 D2549020500200 D2549020500400 D2549020500800

13. Assembly of the Electrical System (26-1)

(a) Install and assemble the microswitch 26-150 as follows:

1 Attach the door contact switch 26-160 with the screws 26-180 to the support angle 26-220.

2 Attach the threaded bushings 26-190 and the guide 26-200 with the screws 26-170.

WARNING: BE VERY CAREFUL WHEN YOU REMOVE OR INSTALL THE SPRING. BECAUSE THERE IS REMAINING TENSION IN THE SPRING, IT CAN CAUSE YOU INJURY.

3 Attach the spring 26-210.

4 Attach the microswitch 26-150 with the screws 26-230.

(b) Attach the sheet 26-470 with the screws 26-480, 26-490 and the nuts 26-500.

(c) Attach the screws 26-440, the washers 26-450 and the nuts 26-460 to the lavatory structure.

(d) Attach the screws 26-120 and the washers 26-030 to the lavatory structure.

(e) Attach the loudspeaker 26-140 to the lavatory structure.

NOTE: For further instructions, see CMMV 23-31-12_D7320 (loudspeaker).

(f) Install and assemble the light assembly 26-130 as follows:

NOTE: For further instructions, see CMMV 33-24-05_DD704 (light assembly).

1 Attach the lamp 26-138, the incandescent lamp 26-137, the housing 26-135 and the lens 26-133.

(g) Attach the call light 26-100 to the lavatory structure.

NOTE: For further instructions, see CMMV 33-20-01_DD704 (call light).

(h) Attach the brackets 26-110 to the lavatory structure.

(i) Attach the smoke detector sealing 26-050 and the smoke detector 26-020 with the screws 26-040 and the washers 26-030 to the lavatory structure.

NOTE: For further instructions, see CMMV 26-17-15_F4885 (smoke detector).

(j) See Assembly of the Cable Harness Assembly for the assembly procedure of the cable harness 26-010.

(k) Connect the cables, the applicable bonding straps 26-260, 26-270, 26-280, 26-290, 26-300, 26-310, 26-340 and the cable harness 26-010 to the electrical components.

(l) Attach the nuts 26-390 and the washers 26-380 to the lavatory structure.

(m) Attach the screws 26-350, 26-360, the washers 26-380, the lock washers 26-410 and the nuts 26-400 to the lavatory structure.

(n) Attach the clamps 26-420, 26-430 with the screws 26-350, 26-360, the washers 26-380, the lock washers 26-410 and the nuts 26-400 to the lavatory structure.

TASK 25-41-51-400-802-B01
D2549010508000 D2549010508200 D2549020500000 D2549020500600 D2549020501000 D2549020501400 D2549020501800 D2549020503200 D2549020504800 D2549020505200 D2549020506000 D2549030501800 D2549030502400 R225401145-000

9. Assembly of the Electrical System

A. General

This task gives you the installation procedures of the component.

B. Job Set-up Information

(1) Not applicable

C. Procedure

WARNING: BE CAREFUL WHEN YOU USE SOLVENTS/CLEANING AGENTS, SEALANTS AND OTHER MATERIALS. OBEY THE MATERIAL MANUFACTURER'S INSTRUCTIONS AND THE LOCAL REGULATIONS. MAKE SURE THAT THERE IS A GOOD FLOW OF AIR THROUGH THE WORK AREA. DO NOT BREATHE THE FUMES. DO NOT SMOKE. DO NOT USE THESE MATERIALS NEAR A FLAME, SPARKS OR SOURCES OF HEAT. USE PROTECTIVE CLOTHING, GOGGLES AND GLOVES. IF YOU GET ONE OF THESE MATERIALS ON YOUR SKIN OR IN YOUR EYES, FLUSH IT AWAY WITH A FLOW OF CLEAN WATER. IF YOU GET ONE OF THESE MATERIALS IN YOUR MOUTH, GET IMMEDIATE MEDICAL AID. IN GENERAL, THESE MATERIALS ARE POISONOUS, FLAMMABLE AND SKIN IRRITANTS.

CAUTION: DO ALL THE WORK ON A CLEAN, SOFT SURFACE TO PREVENT DAMAGE TO THE COMPONENTS.

CAUTION: MAKE SURE THAT ALL THE PARTS ARE CLEAN BEFORE YOU ASSEMBLE THEM.

SUB TASK 25-41-51-440-009-A01
D2549020501800

1. Assembly of the Electrical System (26A-1)

(a) Attach the microswitch 26A-150 with the screws 26A-230.

(b) Attach the sheet 26A-251 with the screws 26A-252, 26A-253 and the nuts 26A-254.

(c) Attach the screws 26A-120 and the washers 26A-030 to the lavatory structure.

(d) Attach the loudspeaker 26A-140 to the lavatory structure.

NOTE: For further instructions, see CMMV 23-31-12_D7320 (loudspeaker).

(e) Install and assemble the light assembly 26A-130 as follows:

NOTE: For further instructions, see CMMV 33-24-05_DD704 (light assembly).

1 Attach the lamp 26A-138, the incandescent lamp 26A-137, the housing 26A-135 and the lens 26A-133.

(f) Attach the call light 26A-100 to the lavatory structure.

NOTE: For further instructions, see CMMV 33-20-01_DD704 (call light).

(g) Attach the brackets 26A-110 to the lavatory structure.

(h) Attach the smoke detector sealing 26A-050 and the smoke detector 26A-020 with the screws 26A-040 and the washers 26A-030 to the lavatory structure.

NOTE: For further instructions, see CMMV 26-16-16_F4885 (smoke detector).

(i) See Assembly of the Cable Harness Assembly for the assembly procedure of the cable harness 26A-010.

(j) Connect the cables, the applicable bonding straps 26A-260, 26A-270, 26A-280, 26A-290, 26A-300, 26A-310, 26A-320 and the cable harness 26A-010 to the electrical components.

(k) Attach the nuts 26A-380 and the washers 26A-370 to the lavatory structure.

(l) Attach the screws 26A-350, 26A-360, the washers 26A-370, the lock washers 26A-400 and the nuts 26A-390 to the lavatory structure.

(m) Attach the clamps 26A-410, 26A-420 with the screws 26A-350, the washers 26A-370, the lock washers 26A-400 and the nuts 26A-390 to the lavatory structure.

SUB TASK 25-41-51-440-009-B01
D2549010508200 R225401145-000

2. Assembly of the Electrical System (26A-1)

(a) Attach the microswitch 26A-150 with the screws 26A-230.

(b) Attach the sheet 26A-251 with the screws 26A-252, 26A-253 and the nuts 26A-254.

(c) Attach the screws 26A-120 and the washers 26A-030 to the lavatory structure.

(d) Attach the loudspeaker 26A-140 to the lavatory structure.

NOTE: For further instructions, see CMMV 23-31-12_D7320 (loudspeaker).

(e) Install and assemble the light assembly 26A-130 as follows:

NOTE: For further instructions, see CMMV 33-24-05_DD704 (light assembly).

1 Attach the lamp 26A-138, the incandescent lamp 26A-137, the housing 26A-135 and the lens 26A-133.

(f) Attach the call light 26A-100 to the lavatory structure.

NOTE: For further instructions, see CMMV 33-20-01_DD704 (call light).

(g) Attach the brackets 26A-110 to the lavatory structure.

(h) Attach the smoke detector sealing 26A-050 and the smoke detector 26A-020 with the screws 26A-040 and the washers 26A-030 to the lavatory structure.

NOTE: For further instructions, see CMMV 26-16-16_F4885 (smoke detector).

(i) See Assembly of the Cable Harness Assembly for the assembly procedure of the cable harness assembly 26A-010.

(j) Connect the cables, the applicable bonding straps 26A-260, 26A-270, 26A-280, 26A-290, 26A-300, 26A-310, 26A-320 and the cable harness assembly 26A-010 to the electrical components.

(k) Attach the bonding straps 26A-430, 26A-440 with the washers 26A-375 to the electrical components.

(l) Attach the nuts 26A-380 and the washers 26A-370 to the lavatory structure.

(m) Attach the screws 26A-350, 26A-360, the washers 26A-370, the lock washers 26A-400 and the nuts 26A-390 to the lavatory structure.

(n) Attach the clamps 26A-410, 26A-420 with the screws 26A-350, the washers 26A-370, the lock washers 26A-400 and the nuts 26A-390 to the lavatory structure.

SUB TASK 25-41-51-440-009-C01
D2549020503200 D2549020504800 D2549020505200 D2549020506000 D2549030501800 D2549030502400

3. Assembly of the Electrical System (26A-1)

(a) Attach the microswitch 26A-150 with the screws 26A-230.

(b) Attach the sheet 26A-251 with the screws 26A-252, 26A-253 and the nuts 26A-254.

(c) Attach the screws 26A-120 and the washers 26A-030 to the lavatory structure.

(d) Attach the loudspeaker 26A-140 to the lavatory structure.

NOTE: For further instructions, see CMMV 23-31-12_D7320 (loudspeaker).

(e) Install and assemble the light assembly 26A-130 as follows:

NOTE: For further instructions, see CMMV 33-24-05_DD704 (light assembly).

1 Attach the lamp 26A-138, the incandescent lamp 26A-137, the housing 26A-135 and the lens 26A-133.

(f) Attach the call light 26A-100 to the lavatory structure.

NOTE: For further instructions, see CMMV 33-20-01_DD704 (call light).

(g) Attach the brackets 26A-110 to the lavatory structure.

(h) Attach the smoke detector sealing 26A-050 and the smoke detector 26A-020 with the screws 26A-040 and the washers 26A-030 to the lavatory structure.

NOTE: For further instructions, see CMMV 26-17-15_F4885 (smoke detector).

(i) See Assembly of the Cable Harness Assembly for the assembly procedure of the cable harness assembly 26A-010.

(j) Connect the cables, the applicable bonding straps 26A-260, 26A-270, 26A-280, 26A-290, 26A-300, 26A-310, 26A-320 and the cable harness assembly 26A-010 to the electrical components.

(k) Attach the bonding straps 26A-430, 26A-440 with the screw 26A-330 and the washer 26A-340 to the electrical components.

(l) Attach the nuts 26A-380 and the washers 26A-370 to the lavatory structure.

(m) Attach the screws 26A-350, 26A-360, the washers 26A-370, the lock washers 26A-400 and the nuts 26A-390 to the lavatory structure.

(n) Attach the clamps 26A-410, 26A-420 with the screws 26A-350, the washers 26A-370, the lock washers 26A-400 and the nuts 26A-390 to the lavatory structure.

SUB TASK 25-41-51-440-009-D01
D2549010508000

4. Assembly of the Electrical System (26A-1)

(a) Attach the microswitch 26A-150 with the screws 26A-230.

(b) Attach the sheet 26A-251 with the screws 26A-252, 26A-253 and the nuts 26A-254.

(c) Attach the screws 26A-580, the washers 26A-590 and the nuts 26A-600 to the lavatory structure.

(d) Attach the screws 26A-120 and the washers 26A-030 to the lavatory structure.

(e) Install and assemble the 2065VU switch panel 26A-450 as follows:

1 Attach the switch button switch 26A-550 to the printed circuit board PCB 26A-520.

2 Attach the protective lens 26A-560 to the switch button switch 26A-550.

3 Install and assemble the switch housing assembly 26A-460 as follows:
a Attach the switch housing 26A-470 with the screws 26A-530 and the spring washers 26A-540 to the printed circuit board PCB 26A-520.

4 Attach the plugs 26A-570 to the printed circuit board PCB 26A-520.

(f) Attach the loudspeaker 26A-140 to the lavatory structure.

NOTE: For further instructions, see CMMV 23-31-12_D7320 (loudspeaker).

(g) Install and assemble the light assembly 26A-130 as follows:

NOTE: For further instructions, see CMMV 33-24-05_DD704 (light assembly).

1 Attach the lamp 26A-138, the incandescent lamp 26A-137, the housing 26A-135 and the lens 26A-133.

(h) Attach the call light 26A-100 to the lavatory structure.

NOTE: For further instructions, see CMMV 33-20-01_DD704 (call light).

(i) Attach the brackets 26A-110 to the lavatory structure.

(j) Attach the smoke detector sealing 26A-050 and the smoke detector 26A-020 with the screws 26A-040 and the washers 26A-030 to the lavatory structure.

NOTE: For further instructions, see CMMV 26-17-15_F4885 (smoke detector).

(k) See Assembly of the Cable Harness Assembly for the assembly procedure of the cable harness assembly 26A-010.

(l) Connect the cables, the applicable bonding straps 26A-260, 26A-270, 26A-280, 26A-290, 26A-300, 26A-310, 26A-320 and the cable harness assembly 26A-010 to the electrical components.

(m) Attach the nuts 26A-380 and the washers 26A-370 to the lavatory structure.

(n) Attach the screws 26A-350, 26A-360, the washers 26A-370, the lock washers 26A-400 and the nuts 26A-390 to the lavatory structure.

(o) Attach the clamps 26A-410, 26A-420 with the screws 26A-350, the washers 26A-370, the lock washers 26A-400 and the nuts 26A-390 to the lavatory structure.

SUB TASK 25-41-51-440-009-E01
D2549020500000 D2549020500600 D2549020501000 D2549020501400

5. Assembly of the Electrical System (26A-1)

(a) Install and assemble the microswitch 26A-150 as follows:

1 Attach the door contact switch 26A-160 with the screws 26A-180 to the support angle 26A-220.

2 Attach the threaded bushings 26A-190 and the guide 26A-200 with the screws 26A-170.

WARNING: BE VERY CAREFUL WHEN YOU REMOVE OR INSTALL THE SPRING. BECAUSE THERE IS REMAINING TENSION IN THE SPRING, IT CAN CAUSE YOU INJURY.

3 Attach the spring 26A-210.

4 Attach the microswitch 26A-150 with the screws 26A-230.

(b) Attach the sheet 26A-251 with the screws 26A-252, 26A-253 and the nuts 26A-254.

(c) Attach the screws 26A-120 and the washers 26A-030 to the lavatory structure.

(d) Attach the loudspeaker 26A-140 to the lavatory structure.

NOTE: For further instructions, see CMMV 23-31-12_D7320 (loudspeaker).

(e) Install and assemble the light assembly 26A-130 as follows:

NOTE: For further instructions, see CMMV 33-24-05_DD704 (light assembly).

1 Attach the lamp 26A-138, the incandescent lamp 26A-137, the housing 26A-135 and the lens 26A-133.

(f) Attach the call light 26A-100 to the lavatory structure.

NOTE: For further instructions, see CMMV 33-20-01_DD704 (call light).

(g) Attach the brackets 26A-110 to the lavatory structure.

(h) Attach the smoke detector sealing 26A-050 and the smoke detector 26A-020 with the screws 26A-040 and the washers 26A-030 to the lavatory structure.

NOTE: For further instructions, see CMMV 26-17-15_F4885 (smoke detector).

(i) See Assembly of the Cable Harness Assembly for the assembly procedure of the cable harness 26A-010.

(j) Connect the cables, the applicable bonding straps 26A-260, 26A-270, 26A-280, 26A-290, 26A-300, 26A-310, 26A-320 and the cable harness 26A-010 to the electrical components.

(k) Attach the screw 26A-330 and the washer 26A-340 to the lavatory structure.

(l) Attach the nuts 26A-380 and the washers 26A-370 to the lavatory structure.

(m) Attach the screws 26A-350, 26A-360, the washers 26A-370, the lock washers 26A-400 and the nuts 26A-390 to the lavatory structure.

(n) Attach the clamps 26A-410, 26A-420 with the screws 26A-350, the washers 26A-370, the lock washers 26A-400 and the nuts 26A-390 to the lavatory structure.

TASK 25-41-51-400-802-C01
D2549010501800 D2549010502200 D2549010502400 D2549010509000 D2549020501200 D2549020602800 D2549030500400 D2549030501200 R225401134-000 R225401188-000 R225401188-002

10. Assembly of the Electrical System

A. General

This task gives you the installation procedures of the component.

B. Job Set-up Information

(1) Not applicable

C. Procedure

WARNING: BE CAREFUL WHEN YOU USE SOLVENTS/CLEANING AGENTS, SEALANTS AND OTHER MATERIALS. OBEY THE MATERIAL MANUFACTURER'S INSTRUCTIONS AND THE LOCAL REGULATIONS. MAKE SURE THAT THERE IS A GOOD FLOW OF AIR THROUGH THE WORK AREA. DO NOT BREATHE THE FUMES. DO NOT SMOKE. DO NOT USE THESE MATERIALS NEAR A FLAME, SPARKS OR SOURCES OF HEAT. USE PROTECTIVE CLOTHING, GOGGLES AND GLOVES. IF YOU GET ONE OF THESE MATERIALS ON YOUR SKIN OR IN YOUR EYES, FLUSH IT AWAY WITH A FLOW OF CLEAN WATER. IF YOU GET ONE OF THESE MATERIALS IN YOUR MOUTH, GET IMMEDIATE MEDICAL AID. IN GENERAL, THESE MATERIALS ARE POISONOUS, FLAMMABLE AND SKIN IRRITANTS.

CAUTION: DO ALL THE WORK ON A CLEAN, SOFT SURFACE TO PREVENT DAMAGE TO THE COMPONENTS.

CAUTION: MAKE SURE THAT ALL THE PARTS ARE CLEAN BEFORE YOU ASSEMBLE THEM.

SUB TASK 25-41-51-440-010-A01
D2549010501800 D2549020501200

1. Assembly of the Electrical System (26B-1)

(a) Attach the microswitch 26B-190 with the screws 26B-200.

(b) Attach the sheet 26B-440 with the screws 26B-450, 26B-460 and the nuts 26B-470.

(c) Attach the screws 26B-410, the washers 26B-420 and the nuts 26B-430 to the lavatory structure.

(d) Attach the screws 26B-120 and the washers 26B-030 to the lavatory structure.

(e) Attach the loudspeaker 26B-180 to the lavatory structure.

NOTE: For further instructions, see CMMV 23-31-12_D7320 (loudspeaker).

(f) Install and assemble the light assembly 26B-130 as follows:

NOTE: For further instructions, see CMMV 33-24-05_DD704 (light assembly).

1 Attach the lamp 26B-170, the incandescent lamp 26B-160, the housing 26B-150 and the lens 26B-140.

(g) Attach the call light 26B-100 to the lavatory structure.

NOTE: For further instructions, see CMMV 33-20-01_DD704 (call light).

(h) Attach the brackets 26B-110 to the lavatory structure.

(i) Attach the smoke detector sealing 26B-050 and the smoke detector 26B-020 with the screws 26B-040 and the washers 26B-030 to the lavatory structure.

NOTE: For further instructions, see CMMV 26-17-17_F4885 (smoke detector).

(j) See Assembly of the Cable Harness Assembly for the assembly procedure of the cable harness 26B-010.

(k) Connect the cables, the applicable bonding straps 26B-230, 26B-240, 26B-250, 26B-260, 26B-270, 26B-280, 26B-310 and the cable harness 26B-010 to the electrical components.

(l) Attach the bonding straps 26B-290, 26B-300 with the screws 26B-340 to the electrical components.

(m) Attach the nuts 26B-350 and the washers 26B-360 to the lavatory structure.

(n) Attach the screws 26B-320, 26B-330, the washers 26B-350, the lock washers 26B-380 and the nuts 26B-370 to the lavatory structure.

(o) Attach the clamps 26B-390, 26B-400 with the screws 26B-320, the washers 26B-350, the lock washers 26B-380 and the nuts 26B-370 to the lavatory structure.

SUB TASK 25-41-51-440-010-B01
D2549010502200

2. Assembly of the Electrical System (26B-1)

(a) Attach the microswitch 26B-190 with the screws 26B-200.

(b) Attach the sheet 26B-440 with the screws 26B-450, 26B-460 and the nuts 26B-470.

(c) Attach the screws 26B-410, the washers 26B-420 and the nuts 26B-430 to the lavatory structure.

(d) Attach the screws 26B-120 and the washers 26B-030 to the lavatory structure.

(e) Attach the loudspeaker 26B-180 to the lavatory structure.

NOTE: For further instructions, see CMMV 23-31-12_D7320 (loudspeaker).

(f) Install and assemble the light assembly 26B-130 as follows:

NOTE: For further instructions, see CMMV 33-24-05_DD704 (light assembly).

1 Attach the lamp 26B-170, the incandescent lamp 26B-160, the housing 26B-150 and the lens 26B-140.

(g) Attach the call light 26B-100 to the lavatory structure.

NOTE: For further instructions, see CMMV 33-20-01_DD704 (call light).

(h) Attach the brackets 26B-110 to the lavatory structure.

(i) Attach the smoke detector sealing 26B-050 and the smoke detector 26B-020 with the screws 26B-040 and the washers 26B-030 to the lavatory structure.

NOTE: For further instructions, see CMMV 26-17-15_F4885 (smoke detector).

(j) See Assembly of the Cable Harness Assembly for the assembly procedure of the cable harness 26B-010.

(k) Connect the cables, the applicable bonding straps 26B-230, 26B-240, 26B-250, 26B-260, 26B-270, 26B-280, 26B-310 and the cable harness 26B-010 to the electrical components.

(l) Attach the bonding straps 26B-290, 26B-300 with the screws 26B-340 to the electrical components.

(m) Attach the nuts 26B-350 and the washers 26B-360 to the lavatory structure.

(n) Attach the screws 26B-320, 26B-330, the washers 26B-350, the lock washers 26B-380 and the nuts 26B-370 to the lavatory structure.

(o) Attach the clamps 26B-390, 26B-400 with the screws 26B-320, the washers 26B-350, the lock washers 26B-380 and the nuts 26B-370 to the lavatory structure.

SUB TASK 25-41-51-440-010-C01
D2549010502400

3. Assembly of the Electrical System (26B-1)

(a) Install and assemble the microswitch 26B-190 as follows:

1 Attach the door contact switch 26B-192 with the screws 26B-194 to the support angle 26B-198.

2 Attach the threaded bushings 26B-195 and the guide 26B-196 with the screws 26B-193.

WARNING: BE VERY CAREFUL WHEN YOU REMOVE OR INSTALL THE SPRING. BECAUSE THERE IS REMAINING TENSION IN THE SPRING, IT CAN CAUSE YOU INJURY.

3 Attach the spring 26B-197.

4 Attach the microswitch 26B-190 with the screws 26B-200.

(b) Attach the sheet 26B-440 with the screws 26B-450, 26B-460 and the nuts 26B-470.

(c) Attach the screws 26B-410, the washers 26B-420 and the nuts 26B-430 to the lavatory structure.

(d) Attach the screws 26B-120 and the washers 26B-030 to the lavatory structure.

(e) Attach the loudspeaker 26B-180 to the lavatory structure.

NOTE: For further instructions, see CMMV 23-31-12_D7320 (loudspeaker).

(f) Install and assemble the light assembly 26B-130 as follows:

NOTE: For further instructions, see CMMV 33-24-05_DD704 (light assembly).

1 Attach the lamp 26B-170, the incandescent lamp 26B-160, the housing 26B-150 and the lens 26B-140.

(g) Attach the call light 26B-100 to the lavatory structure.

NOTE: For further instructions, see CMMV 33-20-01_DD704 (call light).

(h) Attach the brackets 26B-110 to the lavatory structure.

(i) Attach the smoke detector sealing 26B-050 and the smoke detector 26B-020 with the screws 26B-040 and the washers 26B-030 to the lavatory structure.

NOTE: For further instructions, see CMMV 26-17-15_F4885 (smoke detector).

(j) See Assembly of the Cable Harness Assembly for the assembly procedure of the cable harness 26B-010.

(k) Connect the cables, the applicable bonding straps 26B-230, 26B-240, 26B-250, 26B-260, 26B-270, 26B-280, 26B-310 and the cable harness 26B-010 to the electrical components.

(l) Attach the bonding straps 26B-290, 26B-300 with the screws 26B-340 to the electrical components.

(m) Attach the nuts 26B-350 and the washers 26B-360 to the lavatory structure.

(n) Attach the screws 26B-320, 26B-330, the washers 26B-350, the lock washers 26B-380 and the nuts 26B-370 to the lavatory structure.

(o) Attach the clamps 26B-390, 26B-400 with the screws 26B-320, the washers 26B-350, the lock washers 26B-380 and the nuts 26B-370 to the lavatory structure.

SUB TASK 25-41-51-440-010-D01
D2549010509000 D2549020602800 D2549030500400 D2549030501200 R225401134-000 R225401188-000 R225401188-002

4. Assembly of the Electrical System (26B-1)

(a) Attach the microswitch 26B-190 with the screws 26B-200.

(b) Attach the sheet 26B-440 with the screws 26B-450, 26B-460 and the nuts 26B-470.

(c) Attach the screws 26B-410, the washers 26B-420 and the nuts 26B-430 to the lavatory structure.

(d) Attach the screws 26B-120 and the washers 26B-030 to the lavatory structure.

(e) Attach the loudspeaker 26B-180 to the lavatory structure.

NOTE: For further instructions, see CMMV 23-31-12_D7320 (loudspeaker).

(f) Install and assemble the light assembly 26B-130 as follows:

NOTE: For further instructions, see CMMV 33-24-05_DD704 (light assembly).

1 Attach the lamp 26B-170, the incandescent lamp 26B-160, the housing 26B-150 and the lens 26B-140.

(g) Attach the call light 26B-100 to the lavatory structure.

NOTE: For further instructions, see CMMV 33-20-01_DD704 (call light).

(h) Attach the brackets 26B-110 to the lavatory structure.

(i) Attach the smoke detector sealing 26B-050 and the smoke detector 26B-020 with the screws 26B-040 and the washers 26B-030 to the lavatory structure.

NOTE: For further instructions, see CMMV 26-16-16_F4885 (smoke detector).

(j) See Assembly of the Cable Harness Assembly for the assembly procedure of the cable harness assembly 26B-010.

(k) Connect the cables, the applicable bonding straps 26B-230, 26B-240, 26B-250, 26B-260, 26B-270, 26B-280, 26B-310 and the cable harness assembly 26B-010 to the electrical components.

(l) Attach the bonding straps 26B-290, 26B-300 with the screws 26B-340 to the electrical components.

(m) Attach the nuts 26B-350 and the washers 26B-360 to the lavatory structure.

(n) Attach the screws 26B-320, 26B-330, the washers 26B-350, the lock washers 26B-380 and the nuts 26B-370 to the lavatory structure.

(o) Attach the clamps 26B-390, 26B-400 with the screws 26B-320, the washers 26B-350, the lock washers 26B-380 and the nuts 26B-370 to the lavatory structure.

TASK 25-41-51-400-802-D01

D2549010509400 D2549010509600 D2549010509800 D2549010510000 D2549010510200
D2549010510400 D2549010510800 D2549010511000 D2549010511400 D2549010511600
D2549010511800 D2549010512000 D2549010512200 D2549010512400 D2549010512600
D2549010513000 D2549010513200 D2549010513400 D2549010513800 D2549010514000
D2549010514200 D2549010514400 D2549010514800 D2549010600000 D2549010600200
D2549010600400 D2549010600600 D2549010601000 D2549010601200 D2549010601600
D2549010601800 D2549010602000 D2549010602200 D2549010602400 D2549010602600
D2549010602800 D2549020506200 D2549020506400 D2549020506600 D2549020506800
D2549020507000 D2549020507200 D2549020602200 D2549020604200 D2549020604400
D2549020604600 D2549020604800 D2549020605000 D2549020605200 D2549020605400
D2549020605600 D2549020606000 D2549020606800 D2549020607000 D2549020607400
D2549020607600 D2549020607800 D2549020608200 D2549020608400 D2549020608600
D2549020608800 D2549020609000 D2549020609200 D2549020609400 D2549020609600
D2549020609800 D2549020610000 D2549020610200 D2549020610400 D2549020610600
D2549020610800 D2549020611000 D2549020611200 D2549020611400 D2549020611600
D2549020611800 D2549020612000 D2549020612200 D2549020612400 D2549020612600
D2549020612800 D2549020613000 D2549020613200 D2549020613600 D2549020613800
D2549020614000 D2549020614400 D2549020614600 D2549020614800 D2549020700000
D2549020700400 D2549020700600 D2549020700800 D2549020701000 D2549020701200
D2549020701400 D2549020701800 D2549020702000 D2549020702200 D2549020702400
D2549020702600 D2549020702800 D2549020703200 D2549020703400 D2549020703600
D2549020703800 D2549020704000 D2549020704200 D2549020704400 D2549020704600
D2549020705400 D2549020705600 D2549020706000 D2549020706800 D2549030504000
D2549030504200 D2549030504600 D2549030504800 D2549030505200 D2549030505400
D2549030505600 D2549030505800 D2549030506000 D2549030506200 D2549030506400
D2549030506600 D2549030506800 D2549030507000 D2549030507200 D2549030507400
D2549030507600 D2549030507800 D2549030508000 D2549030508200 D2549030508400
D2549030508600 D2549030508800 D2549030509000 D2549030509200 D2549030509400
D2549030509600 D2549030510000 D2549030510200 D2549030510600 D2549030510800
D2549030511000 D2549030511200 D2549030511400 D2549030511600 D2549030511800
D2549030512000 D2549030512200 D2549030512400 D2549030512800 D2549030513400
D2549030513600 D2549030513800 D2549030514000 D2549030514200 D2549030514400
D2549030600000 D2549030600800 D2549030601400 R225401107-004 R225401134-002
R225401134-004 R225401134-006 R225401134-016 R225401136-016 R225401137-000
R225401137-002 R225401137-004 R225401137-006 R225401137-008 R225401137-010
R225401137-012 R225401137-014 R225401142-000 R225401142-002 R225401152-000
R225401153-000 R225401159-000 R225401160-002 R225401168-004 R225401168-006
R225401168-016 R225401172-002 R225401172-004 R225401175-000 R225401175-002
R225401176-000

11. Assembly of the Electrical System

A. General

This task gives you the installation procedures of the component.

B. Job Set-up Information

(1) Not applicable

C. Procedure

WARNING: **BE CAREFUL WHEN YOU USE SOLVENTS/CLEANING AGENTS, SEALANTS AND OTHER MATERIALS. OBEY THE MATERIAL MANUFACTURER'S INSTRUCTIONS AND THE LOCAL REGULATIONS. MAKE SURE THAT THERE IS A GOOD FLOW OF AIR THROUGH THE WORK AREA. DO NOT BREATHE THE FUMES. DO NOT SMOKE. DO NOT USE THESE MATERIALS NEAR A FLAME, SPARKS OR SOURCES OF HEAT. USE PROTECTIVE CLOTHING, GOGGLES AND GLOVES. IF YOU GET ONE OF THESE MATERIALS ON YOUR SKIN OR IN YOUR EYES, FLUSH IT AWAY WITH A FLOW OF CLEAN WATER. IF YOU GET ONE OF THESE MATERIALS IN YOUR MOUTH, GET IMMEDIATE MEDICAL AID. IN GENERAL, THESE MATERIALS ARE POISONOUS, FLAMMABLE AND SKIN IRRITANTS.**

CAUTION: **DO ALL THE WORK ON A CLEAN, SOFT SURFACE TO PREVENT DAMAGE TO THE COMPONENTS.**

CAUTION: **MAKE SURE THAT ALL THE PARTS ARE CLEAN BEFORE YOU ASSEMBLE THEM.**

SUB TASK 25-41-51-440-011-A01

D2549010514800 D2549010601600 D2549010601800 D2549010602200 D2549010602600 D2549010602800 D2549020614800 D2549020700400 D2549020700600 D2549020700800 D2549020702200 D2549020702400 D2549020702600 D2549020702800 D2549020703400 D2549020703800 D2549020704400 D2549020705600 D2549020706000 D2549020706800 D2549030507000 D2549030508000 D2549030508200 D2549030510000 D2549030510200 D2549030511400 D2549030512400 D2549030512800 D2549030513400 D2549030513600 D2549030514000 D2549030514200 D2549030600800 D2549030601400 R225401137-006 R225401137-008 R225401137-014 R225401142-002 R225401152-000 R225401153-000 R225401168-006 R225401168-016 R225401172-002 R225401172-004

1. Assembly of the Electrical System (26C-1)

(a) Attach the microswitch 26C-190 with the screws 26C-200.

(b) Attach the screws 26C-120, 26C-330, the washers 26C-030, 26C-320 and the nuts 26C-340 to the lavatory structure.

(c) Attach the loudspeaker 26C-180 to the lavatory structure.

NOTE: For further instructions, see CMMV 23-31-12_D7320 (loudspeaker).

(d) Install and assemble the light assembly 26C-130 as follows:

NOTE: For further instructions, see CMMV 33-24-05_DD704 (light assembly).

1 Attach the lamp 26C-170, the incandescent lamp 26C-160, the housing 26C-150 and the lens 26C-140.

(e) Attach the call light 26C-100 to the lavatory structure.

NOTE: For further instructions, see CMMV 33-20-01_DD704 (call light).

(f) Attach the bracket 26C-110 with the screws 26C-120 and the washers 26C-030 to the lavatory structure.

(g) Attach the bracket 26C-110 with the screws 26C-120 to the lavatory structure.

(h) Attach the smoke detector sealing 26C-050 and the smoke detector 26C-020 with the screws 26C-040 and the washers 26C-030 to the lavatory structure.

NOTE: For further instructions, see CMMV 26-16-16_F4885 (smoke detector).

(i) See Assembly of the Cable Harness Assembly for the assembly procedure of the cable harness assembly 26C-010.

(j) Connect the cables, the applicable bonding straps 26C-230, 26C-240, 26C-250, 26C-260, 26C-270 and the cable harness assembly 26C-010 to the electrical components.

(k) Install the ami cabin attendant seat cable 26C-350 as follows:

1 Attach the ami cabin attendant seat cable 26C-350, the connector backshell 26C-355 and the plug connectors 26C-354, 26C-356 to the lavatory structure.

(l) Attach the nut 26C-300 and the washer 26C-290 to the lavatory structure.

(m) Attach the clamp 26C-310 with the screw 26C-280, the washer 26C-290 and the nut 26C-300 to the lavatory structure.

SUB TASK 25-41-51-440-011-B01
D2549010513000 D2549010601200

2. Assembly of the Electrical System (26C-1)

(a) Attach the microswitch 26C-190 with the screws 26C-200.

(b) Attach the screws 26C-120, 26C-330, the washers 26C-030, 26C-320 and the nuts 26C-340 to the lavatory structure.

(c) Attach the loudspeaker 26C-180 to the lavatory structure.

NOTE: For further instructions, see CMMV 23-31-12_D7320 (loudspeaker).

(d) Install and assemble the light assembly 26C-130 as follows:

NOTE: For further instructions, see CMMV 33-24-05_DD704 (light assembly).

1 Attach the lamp 26C-170, the incandescent lamp 26C-160, the housing 26C-150 and the lens 26C-140.

(e) Attach the call light 26C-100 to the lavatory structure.

NOTE: For further instructions, see CMMV 33-20-01_DD704 (call light).

(f) Attach the bracket 26C-110 with the screws 26C-120 and the washers 26C-030 to the lavatory structure.

(g) Attach the bracket 26C-110 with the screws 26C-120 to the lavatory structure.

(h) Attach the smoke detector sealing 26C-050 and the smoke detector 26C-020 with the screws 26C-040 and the washers 26C-030 to the lavatory structure.

NOTE: For further instructions, see CMMV 26-17-15_F4885 (smoke detector).

(i) See Assembly of the Cable Harness Assembly for the assembly procedure of the cable harness assembly 26C-010.

(j) Connect the cables, the applicable bonding straps 26C-230, 26C-240, 26C-250, 26C-260, 26C-270 and the cable harness assembly 26C-010 to the electrical components.

(k) Install the ami cabin attendant seat cable 26C-350 as follows:

1 Attach the ami cabin attendant seat cable 26C-350, the connector back-shell 26C-355 and the plug connectors 26C-354, 26C-356 to the lavatory structure.

(l) Attach the nut 26C-300 and the washer 26C-290 to the lavatory structure.

(m) Attach the clamp 26C-310 with the screw 26C-280, the washer 26C-290 and the nut 26C-300 to the lavatory structure.

SUB TASK 25-41-51-440-011-C01

D2549010509600 D2549010509800 D2549010510000 D2549010510200 D2549010510800 D2549010511000 D2549010511400 D2549010511600 D2549010511800 D2549010512000 D2549010512400 D2549010512600 D2549010513200 D2549010513400 D2549010513800 D2549010514200 D2549010514400 D2549010600000 D2549010600200 D2549010600400 D2549010600600 D2549010601000 D2549010602400 D2549020506800 D2549020602200 D2549020604200 D2549020604400 D2549020604600 D2549020604800 D2549020605000 D2549020605200 D2549020605400 D2549020606000 D2549020606800 D2549020607000 D2549020607400 D2549020607600 D2549020607800 D2549020608400 D2549020608600 D2549020608800 D2549020609000 D2549020609200 D2549020609400 D2549020609600 D2549020609800 D2549020610000 D2549020610400 D2549020610600 D2549020610800 D2549020611000 D2549020611200 D2549020611400 D2549020611600 D2549020611800 D2549020612000 D2549020612400 D2549020612600 D2549020612800 D2549020613000 D2549020613200 D2549020613800 D2549020614000 D2549020614400 D2549020701200 D2549020701400 D2549020701800 D2549020702000 D2549020703200 D2549020703600 D2549020704000 D2549020704200 D2549020704600 D2549030504000 D2549030504200 D2549030504600 D2549030504800 D2549030505200 D2549030505600 D2549030505800 D2549030506000 D2549030506200 D2549030506400 D2549030506800 D2549030507200 D2549030507400 D2549030507600 D2549030508400 D2549030508600 D2549030508800 D2549030509000 D2549030509200 D2549030509400 D2549030509600 D2549030510600 D2549030510800 D2549030511200 D2549030511800 D2549030514400 R225401107-004 R225401136-016 R225401137-000 R225401137-002 R225401137-004 R225401137-010 R225401137-012 R225401142-000 R225401159-000 R225401160-002 R225401168-004 R225401175-000 R225401175-002 R225401176-000

3. Assembly of the Electrical System (26C-1)

(a) Attach the microswitch 26C-190 with the screws 26C-200.

(b) Attach the screws 26C-120, 26C-330, the washers 26C-030, 26C-320 and the nuts 26C-340 to the lavatory structure.

(c) Attach the loudspeaker 26C-180 to the lavatory structure.

NOTE: For further instructions, see CMMV 23-31-12_D7320 (loudspeaker).

(d) Install and assemble the light assembly 26C-130 as follows:

NOTE: For further instructions, see CMMV 33-24-05_DD704 (light assembly).

1 Attach the lamp 26C-170, the incandescent lamp 26C-160, the housing 26C-150 and the lens 26C-140.

(e) Attach the call light 26C-100 to the lavatory structure.

NOTE: For further instructions, see CMMV 33-20-01_DD704 (call light).

(f) Attach the bracket 26C-115 with the screws 26C-120 and the washers 26C-030 to the lavatory structure.

(g) Attach the bracket 26C-111 with the screws 26C-120 to the lavatory structure.

(h) Attach the smoke detector sealing 26C-050 and the smoke detector 26C-020 with the screws 26C-040 and the washers 26C-030 to the lavatory structure.

NOTE: For further instructions, see CMMV 26-17-15_F4885 (smoke detector).

(i) See Assembly of the Cable Harness Assembly for the assembly procedure of the cable harness assembly 26C-010.

(j) Connect the cables, the applicable bonding straps 26C-230, 26C-240, 26C-250, 26C-260, 26C-270 and the cable harness assembly 26C-010 to the electrical components.

(k) Install the ami cabin attendant seat cable 26C-350 as follows:

1 Attach the ami cabin attendant seat cable 26C-350, the connector backshell 26C-355 and the plug connectors 26C-354, 26C-356 to the lavatory structure.

(l) Attach the nut 26C-300 and the washer 26C-290 to the lavatory structure.

(m) Attach the clamp 26C-310 with the screw 26C-280, the washer 26C-290 and the nut 26C-300 to the lavatory structure.

SUB TASK 25-41-51-440-011-D01
D2549020506600 D2549020605600 D2549020608200 D2549020613600 D2549030507800 R225401134-002 R225401134-004 R225401134-006 R225401134-016

4. Assembly of the Electrical System (26C-1)

(a) Attach the microswitch 26C-190 with the screws 26C-200.

(b) Attach the screws 26C-120, 26C-330, the washers 26C-030, 26C-320 and the nuts 26C-340 to the lavatory structure.

(c) Attach the loudspeaker 26C-180 to the lavatory structure.

NOTE: For further instructions, see CMMV 23-31-12_D7320 (loudspeaker).

(d) Install and assemble the light assembly 26C-130 as follows:

NOTE: For further instructions, see CMMV 33-24-05_DD704 (light assembly).

1 Attach the lamp 26C-170, the incandescent lamp 26C-160, the housing 26C-150 and the lens 26C-140.

(e) Attach the call light 26C-100 to the lavatory structure.

NOTE: For further instructions, see CMMV 33-20-01_DD704 (call light).

(f) Attach the bracket 26C-115 with the screws 26C-120 and the washers 26C-030 to the lavatory structure.

(g) Attach the bracket 26C-111 with the screws 26C-120 to the lavatory structure.

(h) Attach the smoke detector sealing 26C-050 and the smoke detector 26C-020 with the screws 26C-040 and the washers 26C-030 to the lavatory structure.

NOTE: For further instructions, see CMMV 26-16-16_F4885 (smoke detector).

(i) See Assembly of the Cable Harness Assembly for the assembly procedure of the cable harness assembly 26C-010.

(j) Connect the cables, the applicable bonding straps 26C-230, 26C-240, 26C-250, 26C-260, 26C-270 and the cable harness assembly 26C-010 to the electrical components.

(k) Install the ami cabin attendant seat cable 26C-350 as follows:

1 Attach the ami cabin attendant seat cable 26C-350, the connector backshell 26C-355 and the plug connectors 26C-354, 26C-356 to the lavatory structure.

(l) Attach the nut 26C-300 and the washer 26C-290 to the lavatory structure.

(m) Attach the clamp 26C-310 with the screw 26C-280, the washer 26C-290 and the nut 26C-300 to the lavatory structure.

SUB TASK 25-41-51-440-011-E01
D2549020614600 D2549020700000 D2549030512000 D2549030512200 D2549030600000

5. Assembly of the Electrical System (26C-1)

(a) Attach the microswitch 26C-190 with the screws 26C-200.

(b) Attach the screws 26C-120, 26C-330, the washers 26C-030, 26C-320 and the nuts 26C-340 to the lavatory structure.

(c) Install and assemble the 2065VU switch panel 26C-380 as follows:

1 Attach the switch button switch 26C-480 to the printed circuit board PCB 26C-450.

2 Attach the protective lens 26C-490 to the switch button switch 26C-480.

3 Install and assemble the switch housing assembly 26C-390 as follows:
a Attach the switch housing 26C-400 with the screws 26C-460 and the spring washers 26C-470 to the printed circuit board PCB 26C-450.

4 Attach the plugs 26C-500 to the printed circuit board PCB 26C-450.

(d) Attach the loudspeaker 26C-180 to the lavatory structure.

NOTE: For further instructions, see CMMV 23-31-12_D7320 (loudspeaker).

(e) Install and assemble the light assembly 26C-130 as follows:

NOTE: For further instructions, see CMMV 33-24-05_DD704 (light assembly).

1 Attach the lamp 26C-170, the incandescent lamp 26C-160, the housing 26C-150 and the lens 26C-140.

(f) Attach the call light 26C-100 to the lavatory structure.

NOTE: For further instructions, see CMMV 33-20-01_DD704 (call light).

(g) Attach the bracket 26C-110 with the screws 26C-120 and the washers 26C-030 to the lavatory structure.

(h) Attach the bracket 26C-110 with the screws 26C-120 to the lavatory structure.

(i) Attach the smoke detector sealing 26C-050 and the smoke detector 26C-020 with the screws 26C-040 and the washers 26C-030 to the lavatory structure.

NOTE: For further instructions, see CMMV 26-16-16_F4885 (smoke detector).

(j) See Assembly of the Cable Harness Assembly for the assembly procedure of the cable harness assembly 26C-010.

(k) Connect the cables, the applicable bonding straps 26C-230, 26C-240, 26C-250, 26C-260, 26C-270 and the cable harness assembly 26C-010 to the electrical components.

(l) Install the ami cabin attendant seat cable 26C-350 as follows:

1 Attach the ami cabin attendant seat cable 26C-350, the connector backshell 26C-355 and the plug connectors 26C-354, 26C-356 to the lavatory structure.

(m) Attach the nut 26C-300 and the washer 26C-290 to the lavatory structure.

(n) Attach the clamp 26C-310 with the screw 26C-280, the washer 26C-290 and the nut 26C-300 to the lavatory structure.

SUB TASK 25-41-51-440-011-F01
D2549010509400 D2549010512200 D2549020610200 D2549020612200 D2549020705400

6. Assembly of the Electrical System (26C-1)

(a) Attach the microswitch 26C-190 with the screws 26C-200.

(b) Attach the screws 26C-120, 26C-330, the washers 26C-030, 26C-320 and the nuts 26C-340 to the lavatory structure.

(c) Install and assemble the 2065VU switch panel 26C-380 as follows:

1 Attach the switch button switch 26C-480 to the printed circuit board PCB 26C-450.

2 Attach the protective lens 26C-490 to the switch button switch 26C-480.

3 Install and assemble the switch housing assembly 26C-390 as follows:
a Attach the switch housing 26C-400 with the screws 26C-460 and the spring washers 26C-470 to the printed circuit board PCB 26C-450.

4 Attach the plugs 26C-500 to the printed circuit board PCB 26C-450.

(d) Attach the loudspeaker 26C-180 to the lavatory structure.

NOTE: For further instructions, see CMMV 23-31-12_D7320 (loudspeaker).

(e) Install and assemble the light assembly 26C-130 as follows:

NOTE: For further instructions, see CMMV 33-24-05_DD704 (light assembly).

1 Attach the lamp 26C-170, the incandescent lamp 26C-160, the housing 26C-150 and the lens 26C-140.

(f) Attach the call light 26C-100 to the lavatory structure.

NOTE: For further instructions, see CMMV 33-20-01_DD704 (call light).

(g) Attach the bracket 26C-115 with the screws 26C-120 and the washers 26C-030 to the lavatory structure.

(h) Attach the bracket 26C-111 with the screws 26C-120 to the lavatory structure.

(i) Attach the smoke detector sealing 26C-050 and the smoke detector 26C-020 with the screws 26C-040 and the washers 26C-030 to the lavatory structure.

NOTE: For further instructions, see CMMV 26-17-17_F4885 (smoke detector).

(j) See Assembly of the Cable Harness Assembly for the assembly procedure of the cable harness assembly 26C-010.

(k) Connect the cables, the applicable bonding straps 26C-230, 26C-240, 26C-250, 26C-260, 26C-270 and the cable harness assembly 26C-010 to the electrical components.

(l) Install the ami cabin attendant seat cable 26C-350 as follows:

1 Attach the ami cabin attendant seat cable 26C-350, the connector backshell 26C-355 and the plug connectors 26C-354, 26C-356 to the lavatory structure.

(m) Attach the nut 26C-300 and the washer 26C-290 to the lavatory structure.

(n) Attach the clamp 26C-310 with the screw 26C-280, the washer 26C-290 and the nut 26C-300 to the lavatory structure.

SUB TASK 25-41-51-440-011-G01
D2549010510400 D2549030511600

7. Assembly of the Electrical System (26C-1)

(a) Attach the microswitch 26C-190 with the screws 26C-200.

(b) Attach the screws 26C-120, 26C-330, the washers 26C-030, 26C-320 and the nuts 26C-340 to the lavatory structure.

(c) Install and assemble the 2065VU switch panel 26C-380 as follows:

1 Attach the switch button switch 26C-480 to the printed circuit board PCB 26C-450.

2 Attach the protective lens 26C-490 to the switch button switch 26C-480.

3 Install and assemble the switch housing assembly 26C-390 as follows:
a Attach the switch housing 26C-400 with the screws 26C-460 and the spring washers 26C-470 to the printed circuit board PCB 26C-450.

4 Attach the plugs 26C-500 to the printed circuit board PCB 26C-450.

(d) Attach the loudspeaker 26C-180 to the lavatory structure.

NOTE: For further instructions, see CMMV 23-31-12_D7320 (loudspeaker).

(e) Install and assemble the light assembly 26C-130 as follows:

NOTE: For further instructions, see CMMV 33-24-05_DD704 (light assembly).

1 Attach the lamp 26C-170, the incandescent lamp 26C-160, the housing 26C-150 and the lens 26C-140.

(f) Attach the call light 26C-100 to the lavatory structure.

NOTE: For further instructions, see CMMV 33-20-01_DD704 (call light).

(g) Attach the bracket 26C-115 with the screws 26C-120 and the washers 26C-030 to the lavatory structure.

(h) Attach the bracket 26C-111 with the screws 26C-120 to the lavatory structure.

(i) Attach the smoke detector sealing 26C-050 and the smoke detector 26C-020 with the screws 26C-040 and the washers 26C-030 to the lavatory structure.

NOTE: For further instructions, see CMMV 26-17-15_F4885 (smoke detector).

(j) See Assembly of the Cable Harness Assembly for the assembly procedure of the cable harness assembly 26C-010.

(k) Connect the cables, the applicable bonding straps 26C-230, 26C-240, 26C-250, 26C-260, 26C-270 and the cable harness assembly 26C-010 to the electrical components.

(l) Install the ami cabin attendant seat cable 26C-350 as follows:

1 Attach the ami cabin attendant seat cable 26C-350, the connector backshell 26C-355 and the plug connectors 26C-354, 26C-356 to the lavatory structure.

(m) Attach the nut 26C-300 and the washer 26C-290 to the lavatory structure.

(n) Attach the clamp 26C-310 with the screw 26C-280, the washer 26C-290 and the nut 26C-300 to the lavatory structure.

SUB TASK 25-41-51-440-011-H01
D2549030511000

8. Assembly of the Electrical System (26C-1)

(a) Attach the microswitch 26C-190 with the screws 26C-200.

(b) Attach the screws 26C-120, 26C-330, the washers 26C-030, 26C-320 and the nuts 26C-340 to the lavatory structure.

(c) Install and assemble the 2065VU switch panel 26C-380 as follows:

1 Attach the switch button switch 26C-480 to the printed circuit board PCB 26C-450.

2 Attach the protective lens 26C-490 to the switch button switch 26C-480.

3 Install and assemble the switch housing assembly 26C-390 as follows:
a Attach the switch housing 26C-400 with the screws 26C-460 and the spring washers 26C-470 to the printed circuit board PCB 26C-450.

4 Attach the plugs 26C-500 to the printed circuit board PCB 26C-450.

(d) Attach the loudspeaker 26C-180 to the lavatory structure.

NOTE: For further instructions, see CMMV 23-31-12_D7320 (loudspeaker).

(e) Install and assemble the light assembly 26C-130 as follows:

NOTE: For further instructions, see CMMV 33-24-05_DD704 (light assembly).

1 Attach the lamp 26C-170, the incandescent lamp 26C-160, the housing 26C-150 and the lens 26C-140.

(f) Attach the call light 26C-100 to the lavatory structure.

NOTE: For further instructions, see CMMV 33-20-01_DD704 (call light).

(g) Attach the bracket 26C-115 with the screws 26C-120 and the washers 26C-030 to the lavatory structure.

(h) Attach the bracket 26C-111 with the screws 26C-120 to the lavatory structure.

(i) Attach the smoke detector sealing 26C-050 and the smoke detector 26C-020 with the screws 26C-040 and the washers 26C-030 to the lavatory structure.

NOTE: For further instructions, see CMMV 26-16-16_F4885 (smoke detector).

(j) See Assembly of the Cable Harness Assembly for the assembly procedure of the cable harness assembly 26C-010.

(k) Connect the cables, the applicable bonding straps 26C-230, 26C-240, 26C-250, 26C-260, 26C-270 and the cable harness assembly 26C-010 to the electrical components.

(l) Install the ami cabin attendant seat cable 26C-350 as follows:

1 Attach the ami cabin attendant seat cable 26C-350, the connector backshell 26C-355 and the plug connectors 26C-354, 26C-356 to the lavatory structure.

(m) Attach the nut 26C-300 and the washer 26C-290 to the lavatory structure.

(n) Attach the clamp 26C-310 with the screw 26C-280, the washer 26C-290 and the nut 26C-300 to the lavatory structure.

SUB TASK 25-41-51-440-011-J01
D2549010514000 D2549010602000 D2549020506200 D2549020506400
D2549020507000 D2549020701000 D2549030505400 D2549030506600

9. Assembly of the Electrical System (26C-1)

(a) Attach the microswitch 26C-190 with the screws 26C-200.

(b) Attach the screws 26C-120, 26C-330, the washers 26C-030, 26C-320 and the nuts 26C-340 to the lavatory structure.

(c) Attach the loudspeaker 26C-180 to the lavatory structure.

NOTE: For further instructions, see CMMV 23-31-12_D7320 (loudspeaker).

(d) Install and assemble the light assembly 26C-130 as follows:

NOTE: For further instructions, see CMMV 33-24-05_DD704 (light assembly).

1 Attach the lamp 26C-170, the incandescent lamp 26C-160, the housing 26C-150 and the lens 26C-140.

(e) Attach the call light 26C-100 to the lavatory structure.

NOTE: For further instructions, see CMMV 33-20-01_DD704 (call light).

(f) Attach the bracket 26C-115 with the screws 26C-120 and the washers 26C-030 to the lavatory structure.

(g) Attach the bracket 26C-111 with the screws 26C-120 to the lavatory structure.

(h) Attach the smoke detector sealing 26C-050 and the smoke detector 26C-020 with the screws 26C-040 and the washers 26C-030 to the lavatory structure.

NOTE: For further instructions, see CMMV 26-17-15_F4885 (smoke detector).

(i) See Assembly of the Cable Harness Assembly for the assembly procedure of the cable harness assembly 26C-010.

(j) Connect the cables, the applicable bonding straps 26C-230, 26C-240, 26C-250, 26C-260, 26C-270 and the cable harness assembly 26C-010 to the electrical components.

(k) Install the ami cabin attendant seat cable 26C-350 as follows:

1 Attach the ami cabin attendant seat cable 26C-350, the connector backshell 26C-355 and the plug connectors 26C-354, 26C-356 to the lavatory structure.

(l) Attach the bonding strap 26C-273 with the screw 26C-275 to the electrical components.

(m) Attach the nut 26C-300 and the washer 26C-290 to the lavatory structure.

(n) Attach the clamp 26C-310 with the screw 26C-280, the washer 26C-290 and the nut 26C-300 to the lavatory structure.

SUB TASK 25-41-51-440-011-K01
D2549020507200 D2549030513800

10. Assembly of the Electrical System (26C-1)

(a) Attach the microswitch 26C-190 with the screws 26C-200.

(b) Attach the screws 26C-120, 26C-330, the washers 26C-030, 26C-320 and the nuts 26C-340 to the lavatory structure.

(c) Attach the loudspeaker 26C-180 to the lavatory structure.

NOTE: For further instructions, see CMMV 23-31-12_D7320 (loudspeaker).

(d) Install and assemble the light assembly 26C-130 as follows:

NOTE: For further instructions, see CMMV 33-24-05_DD704 (light assembly).

1 Attach the lamp 26C-170, the incandescent lamp 26C-160, the housing 26C-150 and the lens 26C-140.

(e) Attach the call light 26C-100 to the lavatory structure.

NOTE: For further instructions, see CMMV 33-20-01_DD704 (call light).

(f) Attach the bracket 26C-110 with the screws 26C-120 and the washers 26C-030 to the lavatory structure.

(g) Attach the bracket 26C-110 with the screws 26C-120 to the lavatory structure.

(h) Attach the smoke detector sealing 26C-050 and the smoke detector 26C-020 with the screws 26C-040 and the washers 26C-030 to the lavatory structure.

NOTE: For further instructions, see CMMV 26-16-16_F4885 (smoke detector).

(i) See Assembly of the Cable Harness Assembly for the assembly procedure of the cable harness assembly 26C-010.

(j) Connect the cables, the applicable bonding straps 26C-230, 26C-240, 26C-250, 26C-260, 26C-270 and the cable harness assembly 26C-010 to the electrical components.

(k) Install the ami cabin attendant seat cable 26C-350 as follows:

1 Attach the ami cabin attendant seat cable 26C-350, the connector backshell 26C-355 and the plug connectors 26C-354, 26C-356 to the lavatory structure.

(l) Attach the bonding strap 26C-273 with the screw 26C-275 to the electrical components.

(m) Attach the nut 26C-300 and the washer 26C-290 to the lavatory structure.

(n) Attach the clamp 26C-310 with the screw 26C-280, the washer 26C-290 and the nut 26C-300 to the lavatory structure.

TASK 25-41-51-400-802-E01
D2549010513600 D2549010514600 D2549010601400 D2549030509800 D2549030513000 R225401134-018 R225401145-002 R225401172-006

12. Assembly of the Electrical System

A. General

This task gives you the installation procedures of the component.

B. Job Set-up Information

(1) Not applicable

C. Procedure

WARNING: BE CAREFUL WHEN YOU USE SOLVENTS/CLEANING AGENTS, SEALANTS AND OTHER MATERIALS. OBEY THE MATERIAL MANUFACTURER'S INSTRUCTIONS AND THE LOCAL REGULATIONS. MAKE SURE THAT THERE IS A GOOD FLOW OF AIR THROUGH THE WORK AREA. DO NOT BREATHE THE FUMES. DO NOT SMOKE. DO NOT USE THESE MATERIALS NEAR A FLAME, SPARKS OR SOURCES OF HEAT. USE PROTECTIVE CLOTHING, GOGGLES AND GLOVES. IF YOU GET ONE OF THESE MATERIALS ON YOUR SKIN OR IN YOUR EYES, FLUSH IT AWAY WITH A FLOW OF CLEAN WATER. IF YOU GET ONE OF THESE MATERIALS IN YOUR MOUTH, GET IMMEDIATE MEDICAL AID. IN GENERAL, THESE MATERIALS ARE POISONOUS, FLAMMABLE AND SKIN IRRITANTS.

CAUTION: DO ALL THE WORK ON A CLEAN, SOFT SURFACE TO PREVENT DAMAGE TO THE COMPONENTS.

CAUTION: MAKE SURE THAT ALL THE PARTS ARE CLEAN BEFORE YOU ASSEMBLE THEM.

SUB TASK 25-41-51-440-012-A01
D2549010514600 D2549030509800 D2549030513000 R225401134-018 R225401145-002 R225401172-006

1. Assembly of the Electrical System (26D-1)

(a) Attach the microswitch 26D-190 with the screws 26D-200.

(b) Attach the screws 26D-120, 26D-330, the washers 26D-030, 26D-320 and the nuts 26D-340 to the lavatory structure.

(c) Attach the loudspeaker 26D-180 to the lavatory structure.

NOTE: For further instructions, see CMMV 23-31-12_D7320 (loudspeaker).

(d) Install and assemble the light assembly 26D-130 as follows:

NOTE: For further instructions, see CMMV 33-24-05_DD704 (light assembly).

1 Attach the lamp 26D-170, the incandescent lamp 26D-160, the housing 26D-150 and the lens 26D-140.

(e) Attach the call light 26D-100 to the lavatory structure.

NOTE: For further instructions, see CMMV 33-20-01_DD704 (call light).

(f) Attach the brackets 26D-110 with the screws 26D-120 and the washers 26D-030 to the lavatory structure.

(g) Attach the smoke detector sealing 26D-050 and the smoke detector 26D-020 with the screws 26D-040 and the washers 26D-030 to the lavatory structure.

NOTE: For further instructions, see CMMV 26-16-16_F4885 (smoke detector).

(h) See Assembly of the Cable Harness Assembly for the assembly procedure of the cable harness assembly 26D-010.

(i) Connect the cables, the applicable bonding straps 26D-230, 26D-240, 26D-250, 26D-260, 26D-270 and the cable harness assembly 26D-010 to the electrical components.

(j) Install the ami cabin attendant seat cable 26D-350 as follows:

1 Attach the ami cabin attendant seat cable 26D-350, the connector backshell 26D-390 and the plug connectors 26D-380, 26D-400 to the lavatory structure.

(k) Attach the nut 26D-300 and the washer 26D-290 to the lavatory structure.

(l) Attach the clamp 26D-310 with the screw 26D-280, the washer 26D-290 and the nut 26D-300 to the lavatory structure.

SUB TASK 25-41-51-440-012-B01
D2549010513600

2. Assembly of the Electrical System (26D-1)

(a) Attach the microswitch 26D-190 with the screws 26D-200.

(b) Attach the screws 26D-120, 26D-330, the washers 26D-030, 26D-320 and the nuts 26D-340 to the lavatory structure.

(c) Attach the loudspeaker 26D-180 to the lavatory structure.

NOTE: For further instructions, see CMMV 23-31-12_D7320 (loudspeaker).

(d) Install and assemble the light assembly 26D-130 as follows:

NOTE: For further instructions, see CMMV 33-27-01_DD704 (light assembly).

1 Attach the lamp 26D-170, the incandescent lamp 26D-160, the housing 26D-150 and the lens 26D-140.

(e) Attach the call light 26D-100 to the lavatory structure.

NOTE: For further instructions, see CMMV 33-22-01_DD704 (call light).

(f) Attach the brackets 26D-110 with the screws 26D-120 and the washers 26D-030 to the lavatory structure.

(g) Attach the smoke detector sealing 26D-050 and the smoke detector 26D-020 with the screws 26D-040 and the washers 26D-030 to the lavatory structure.

NOTE: For further instructions, see CMMV 26-17-15_F4885 (smoke detector).

(h) See Assembly of the Cable Harness Assembly for the assembly procedure of the cable harness assembly 26D-010.

(i) Connect the cables, the applicable bonding straps 26D-230, 26D-240, 26D-250, 26D-260, 26D-270 and the cable harness assembly 26D-010 to the electrical components.

(j) Install the ami cabin attendant seat cable 26D-350 as follows:

1 Attach the ami cabin attendant seat cable 26D-350, the connector back-shell 26D-390 and the plug connectors 26D-380, 26D-400 to the lavatory structure.

(k) Attach the nut 26D-300 and the washer 26D-290 to the lavatory structure.

(l) Attach the clamp 26D-310 with the screw 26D-280, the washer 26D-290 and the nut 26D-300 to the lavatory structure.

SUB TASK 25-41-51-440-012-C01
D2549010601400

3. Assembly of the Electrical System (26D-1)

(a) Attach the microswitch 26D-190 with the screws 26D-200.

(b) Attach the screws 26D-120, 26D-330, the washers 26D-030, 26D-320 and the nuts 26D-340 to the lavatory structure.

(c) Attach the loudspeaker 26D-180 to the lavatory structure.

NOTE: For further instructions, see CMMV 23-31-12_D7320 (loudspeaker).

(d) Install and assemble the light assembly 26D-130 as follows:

NOTE: For further instructions, see CMMV 33-27-01_DD704 (light assembly).

1 Attach the lamp 26D-170, the incandescent lamp 26D-160, the housing 26D-150 and the lens 26D-140.

(e) Attach the call light 26D-100 to the lavatory structure.

NOTE: For further instructions, see CMMV 33-22-01_DD704 (call light).

(f) Attach the brackets 26D-110 with the screws 26D-120 and the washers 26D-030 to the lavatory structure.

(g) Attach the smoke detector sealing 26D-050 and the smoke detector 26D-020 with the screws 26D-040 and the washers 26D-030 to the lavatory structure.

NOTE: For further instructions, see CMMV 26-16-16_F4885 (smoke detector).

(h) See Assembly of the Cable Harness Assembly for the assembly procedure of the cable harness assembly 26D-010.

(i) Connect the cables, the applicable bonding straps 26D-230, 26D-240, 26D-250, 26D-260, 26D-270 and the cable harness assembly 26D-010 to the electrical components.

(j) Install the ami cabin attendant seat cable 26D-350 as follows:

1 Attach the ami cabin attendant seat cable 26D-350, the connector backshell 26D-390 and the plug connectors 26D-380, 26D-400 to the lavatory structure.

(k) Attach the nut 26D-300 and the washer 26D-290 to the lavatory structure.

(l) Attach the clamp 26D-310 with the screw 26D-280, the washer 26D-290 and the nut 26D-300 to the lavatory structure.

TASK 25-41-51-400-802-F01

D2549010600800 D2549010603000 D2549010603200 D2549010603400 D2549010603600 D2549010603800 D2549010604400 D2549010604600 D2549010604800 D2549020704800 D2549020705000 D2549020705200 D2549020706200 D2549020706400 D2549020706600 D2549020707000 D2549020707200 D2549020707400 D2549020707600 D2549020707800 D2549020710000 D2549020710200 D2549020710800 D2549020711000 D2549020711200 D2549020711400 D2549020712200 D2549020712400 D2549030510400 D2549030513200 D2549030514600 D2549030514800 D2549030600400 D2549030600600 D2549030601000 D2549030601200 D2549030603400 D2549030603600 D2549030603800 D2549030604400 D2549030604600 D2549030604800 D2549030605000 D2549030605800 R225401134-020 R225401136-010 R225401136-020 R225401145-012 R225401152-002 R225401160-000 R225401168-018 R225401172-010 R225401195-000 R225401196-000 R225401196-046 R225401600-000 R225401603-000

13. Assembly of the Electrical System

A. General

This task gives you the installation procedures of the component.

B. Job Set-up Information

(1) Not applicable

C. Procedure

WARNING: BE CAREFUL WHEN YOU USE SOLVENTS/CLEANING AGENTS, SEALANTS AND OTHER MATERIALS. OBEY THE MATERIAL MANUFACTURER'S INSTRUCTIONS AND THE LOCAL REGULATIONS. MAKE SURE THAT THERE IS A GOOD FLOW OF AIR THROUGH THE WORK AREA. DO NOT BREATHE THE FUMES. DO NOT SMOKE. DO NOT USE THESE MATERIALS NEAR A FLAME, SPARKS OR SOURCES OF HEAT. USE PROTECTIVE CLOTHING, GOGGLES AND GLOVES. IF YOU GET ONE OF THESE MATERIALS ON YOUR SKIN OR IN YOUR EYES, FLUSH IT AWAY WITH A FLOW OF CLEAN WATER. IF YOU GET ONE OF THESE MATERIALS IN YOUR MOUTH, GET IMMEDIATE MEDICAL AID. IN GENERAL, THESE MATERIALS ARE POISONOUS, FLAMMABLE AND SKIN IRRITANTS.

CAUTION: DO ALL THE WORK ON A CLEAN, SOFT SURFACE TO PREVENT DAMAGE TO THE COMPONENTS.

CAUTION: MAKE SURE THAT ALL THE PARTS ARE CLEAN BEFORE YOU ASSEMBLE THEM.

SUB TASK 25-41-51-440-013-A01

D2549010603000 D2549010603200 D2549010603400 D2549010603600 D2549010603800 D2549010604400 D2549010604600 D2549010604800 D2549020704800 D2549020705200 D2549020706200 D2549020706400 D2549020706600 D2549020707000 D2549020707200 D2549020707600 D2549020707800 D2549020710000 D2549020710200 D2549020710800 D2549020711000 D2549020711200 D2549020711400 D2549020712200 D2549020712400 D2549030510400 D2549030514600 D2549030600400 D2549030600600 D2549030601000 D2549030601200 D2549030603400 D2549030603600 D2549030604800 D2549030605000 D2549030605800 R225401134-020 R225401136-010 R225401136-020 R225401145-012 R225401152-002 R225401160-000 R225401168-018 R225401172-010 R225401196-000 R225401196-046 R225401600-000 R225401603-000

1. Assembly of the Electrical System (26E-1)

   (a) Attach the microswitch 26E-190 with the screws 26E-200.

   (b) Attach the screws 26E-120, 26E-330, the washers 26E-030, 26E-320 and the nuts 26E-340 to the lavatory structure.

   (c) Attach the loudspeaker 26E-180 to the lavatory structure.

   NOTE: For further instructions, see CMMV 23-31-12_D7320 (loudspeaker).

   (d) Install and assemble the light assembly 26E-130 as follows:

   NOTE: For further instructions, see CMMV 33-24-05_DD704 (light assembly).

      1 Attach the lamp 26E-170, the incandescent lamp 26E-160, the housing 26E-150 and the lens 26E-140.

   (e) Attach the call light 26E-100 to the lavatory structure.

   NOTE: For further instructions, see CMMV 33-20-01_DD704 (call light).

   (f) Attach the brackets 26E-110 with the screws 26E-120 and the washers 26E-030 to the lavatory structure.

   (g) Attach the smoke detector sealing 26E-050 and the smoke detector 26E-020 with the screws 26E-040, the washers 26E-030 and the nuts 26E-425 to the lavatory structure.

   NOTE: For further instructions, see CMMV 26-16-16_F4885 (smoke detector).

(h) See Assembly of the Cable Harness Assembly for the assembly procedure of the cable harness assembly 26E-010.

(i) Connect the cables, the applicable bonding straps 26E-230, 26E-240, 26E-250, 26E-260, 26E-270 and the cable harness assembly 26E-010 to the electrical components.

(j) Install the ami cabin attendant seat cable 26E-350 as follows:

1 Attach the ami cabin attendant seat cable 26E-350, the connector back-shell 26E-390 and the plug connectors 26E-380, 26E-400 to the lavatory structure.

(k) Attach the nut 26E-300 and the washer 26E-290 to the lavatory structure.

(l) Attach the clamp 26E-310 with the screw 26E-280 and the washer 26E-290 to the lavatory structure.

SUB TASK 25-41-51-440-013-B01
D2549010600800 D2549020705000 D2549020707400 D2549030514800 D2549030604600 R225401195-000

2. Assembly of the Electrical System (26E-1)

(a) Attach the microswitch 26E-190 with the screws 26E-200.

(b) Attach the screws 26E-120, 26E-330, the washers 26E-030, 26E-320 and the nuts 26E-340 to the lavatory structure.

(c) Install and assemble the 2065VU switch panel 26E-430 as follows:

1 Attach the switch button switch 26E-520 to the printed circuit board PCB 26E-490.

2 Attach the protective lens 26E-530 to the switch button switch 26E-520.

3 Install and assemble the switch housing assembly 26E-440 as follows:
a Attach the switch housing 26E-450 with the screws 26E-500 and the spring washers 26E-510 to the printed circuit board PCB 26E-490.

4 Attach the plugs 26E-540 to the printed circuit board PCB 26E-490.

(d) Attach the loudspeaker 26E-180 to the lavatory structure.

NOTE: For further instructions, see CMMV 23-31-12_D7320 (loudspeaker).

(e) Install and assemble the light assembly 26E-130 as follows:

NOTE: For further instructions, see CMMV 33-24-05_DD704 (light assembly).

1 Attach the lamp 26E-170, the incandescent lamp 26E-160, the housing 26E-150 and the lens 26E-140.

(f) Attach the call light 26E-100 to the lavatory structure.

NOTE: For further instructions, see CMMV 33-20-01_DD704 (call light).

(g) Attach the brackets 26E-110 with the screws 26E-120 and the washers 26E-030 to the lavatory structure.

(h) Attach the smoke detector sealing 26E-050 and the smoke detector 26E-020 with the screws 26E-040, the washers 26E-030 and the nuts 26E-425 to the lavatory structure.

NOTE: For further instructions, see CMMV 26-16-16_F4885 (smoke detector).

(i) See Assembly of the Cable Harness Assembly for the assembly procedure of the cable harness assembly 26E-010.

(j) Connect the cables, the applicable bonding straps 26E-230, 26E-240, 26E-250, 26E-260, 26E-270 and the cable harness assembly 26E-010 to the electrical components.

(k) Install the ami cabin attendant seat cable 26E-350 as follows:

1 Attach the ami cabin attendant seat cable 26E-350, the connector backshell 26E-390 and the plug connectors 26E-380, 26E-400 to the lavatory structure.

(l) Attach the nut 26E-300 and the washer 26E-290 to the lavatory structure.

(m) Attach the clamp 26E-310 with the screw 26E-280 and the washer 26E-290 to the lavatory structure.

SUB TASK 25-41-51-440-013-C01
D2549030603800 D2549030604400

3. Assembly of the Electrical System (26E-1)

(a) Attach the microswitch 26E-190 with the screws 26E-200.

(b) Attach the screws 26E-120, 26E-330, the washers 26E-030, 26E-320 and the nuts 26E-340 to the lavatory structure.

(c) Attach the loudspeaker 26E-180 to the lavatory structure.

NOTE: For further instructions, see CMMV 23-31-12_D7320 (loudspeaker).

(d) Install and assemble the light assembly 26E-130 as follows:

NOTE: For further instructions, see CMMV 33-24-05_DD704 (light assembly).

1 Attach the lamp 26E-170, the incandescent lamp 26E-160, the housing 26E-150 and the lens 26E-140.

(e) Attach the call light 26E-100 to the lavatory structure.

NOTE: For further instructions, see CMMV 33-20-01_DD704 (call light).

(f) Attach the brackets 26E-110 with the screws 26E-120 and the washers 26E-030 to the lavatory structure.

(g) Attach the smoke detector sealing 26E-050 and the smoke detector 26E-020 with the screws 26E-040, the washers 26E-030 and the nuts 26E-425 to the lavatory structure.

NOTE: For further instructions, see CMMV 26-16-16_F4885 (smoke detector).

(h) See Assembly of the Cable Harness Assembly for the assembly procedure of the cable harness assembly 26E-010.

(i) Connect the cables, the applicable bonding straps 26E-230, 26E-240, 26E-250, 26E-260, 26E-270 and the cable harness assembly 26E-010 to the electrical components.

(j) Install the ami cabin attendant seat cable 26E-350 as follows:

1 Attach the ami cabin attendant seat cable 26E-350, the connector backshell 26E-390 and the plug connectors 26E-380, 26E-400 to the lavatory structure.

(k) Attach the bonding strap 26E-275 with the screw 26E-285 and the washers 26E-291 to the electrical components.

(l) Attach the nut 26E-300 to the lavatory structure.

(m) Attach the clamp 26E-310 with the screw 26E-280 to the lavatory structure.

SUB TASK 25-41-51-440-013-D01
D2549030513200

4. Assembly of the Electrical System (26E-1)

(a) Attach the microswitch 26E-190 with the screws 26E-200.

(b) Attach the screws 26E-120, 26E-330, the washers 26E-030, 26E-320 and the nuts 26E-340 to the lavatory structure.

(c) Attach the loudspeaker 26E-180 to the lavatory structure.

NOTE: For further instructions, see CMMV 23-31-12_D7320 (loudspeaker).

(d) Install and assemble the light assembly 26E-130 as follows:

NOTE: For further instructions, see CMMV 33-24-05_DD704 (light assembly).

1 Attach the lamp 26E-170, the incandescent lamp 26E-160, the housing 26E-150 and the lens 26E-140.

(e) Attach the call light 26E-100 to the lavatory structure.

NOTE: For further instructions, see CMMV 33-22-01_DD704 (call light).

(f) Attach the brackets 26E-110 with the screws 26E-120 and the washers 26E-030 to the lavatory structure.

(g) Attach the smoke detector sealing 26E-050 and the smoke detector 26E-020 with the screws 26E-040, the washers 26E-030 and the nuts 26E-425 to the lavatory structure.

NOTE: For further instructions, see CMMV 26-16-16_F4885 (smoke detector).

(h) See Assembly of the Cable Harness Assembly for the assembly procedure of the cable harness assembly 26E-010.

(i) Connect the cables, the applicable bonding straps 26E-230, 26E-240, 26E-250, 26E-260, 26E-270 and the cable harness assembly 26E-010 to the electrical components.

(j) Install the ami cabin attendant seat cable 26E-350 as follows:

1 Attach the ami cabin attendant seat cable 26E-350, the connector back-shell 26E-390 and the plug connectors 26E-380, 26E-400 to the lavatory structure.

(k) Attach the nut 26E-300 and the washer 26E-290 to the lavatory structure.

(l) Attach the clamp 26E-310 with the screw 26E-280 and the washer 26E-290 to the lavatory structure.

TASK 25-41-51-400-802-G01

D2549010604000 D2549010604200 D2549020701600 D2549020708600 D2549020708800 D2549020709000 D2549020709200 D2549020709400 D2549020709800 D2549020710400 D2549020712800 D2549020713400 D2549020713600 D2549020714400 D2549030601600 D2549030601800 D2549030602000 D2549030602200 D2549030602600 D2549030602800 D2549030603000 D2549030605200 R225401134-022 R225401152-004 R225401168-014 R225401168-028 R225401172-008 R225401600-002

14. Assembly of the Electrical System

A. General

This task gives you the installation procedures of the component.

B. Job Set-up Information

(1) Not applicable

C. Procedure

WARNING: BE CAREFUL WHEN YOU USE SOLVENTS/CLEANING AGENTS, SEALANTS AND OTHER MATERIALS. OBEY THE MATERIAL MANUFACTURER'S INSTRUCTIONS AND THE LOCAL REGULATIONS. MAKE SURE THAT THERE IS A GOOD FLOW OF AIR THROUGH THE WORK AREA. DO NOT BREATHE THE FUMES. DO NOT SMOKE. DO NOT USE THESE MATERIALS NEAR A FLAME, SPARKS OR SOURCES OF HEAT. USE PROTECTIVE CLOTHING, GOGGLES AND GLOVES. IF YOU GET ONE OF THESE MATERIALS ON YOUR SKIN OR IN YOUR EYES, FLUSH IT AWAY WITH A FLOW OF CLEAN WATER. IF YOU GET ONE OF THESE MATERIALS IN YOUR MOUTH, GET IMMEDIATE MEDICAL AID. IN GENERAL, THESE MATERIALS ARE POISONOUS, FLAMMABLE AND SKIN IRRITANTS.

CAUTION: DO ALL THE WORK ON A CLEAN, SOFT SURFACE TO PREVENT DAMAGE TO THE COMPONENTS.

CAUTION: MAKE SURE THAT ALL THE PARTS ARE CLEAN BEFORE YOU ASSEMBLE THEM.

SUB TASK 25-41-51-440-014-A01

1. Assembly of the Electrical System (26F-1)

(a) Attach the microswitch 26F-190 with the screws 26F-200.

(b) Attach the mini inverter 26F-430 with the spacers 26F-440 and the screws 26F-450 to the lavatory structure.

NOTE: For further instructions, see CMMV 25-44-01_D2361 (mini inverter).

(c) Attach the loudspeaker 26F-180 to the lavatory structure.

NOTE: For further instructions, see CMMV 23-31-12_D7320 (loudspeaker).

(d) Install and assemble the light assembly 26F-130 as follows:

NOTE: For further instructions, see CMMV 33-24-05_DD704 (light assembly).

1 Attach the lamp 26F-170, the incandescent lamp 26F-160, the housing 26F-150 and the lens 26F-140.

(e) Attach the call light 26F-100 to the lavatory structure.

NOTE: For further instructions, see CMMV 33-20-01_DD704 (call light).

(f) Attach the brackets 26F-110 with the screws 26F-120 and the washers 26F-030 to the lavatory structure.

(g) Attach the smoke detector sealing 26F-050 and the smoke detector 26F-020 with the screws 26F-040 and the washers 26F-030 to the lavatory structure.

NOTE: For further instructions, see CMMV 26-16-16_F4885 (smoke detector).

(h) See Assembly of the Cable Harness Assembly for the assembly procedure of the cable harness assembly 26F-010.

(i) Connect the cables, the applicable bonding straps 26F-230, 26F-240, 26F-250, 26F-260, 26F-270 and the cable harness assembly 26F-010 to the electrical components.

(j) Install the ami cabin attendant seat cable 26F-350 as follows:

1 Attach the ami cabin attendant seat cable 26F-350, the connector back-shell 26F-390 and the plug connectors 26F-380, 26F-400 to the lavatory structure.

(k) Attach the screws 26F-120, 26F-330, the washers 26F-030, 26F-320 and the nuts 26F-340 to the lavatory structure.

(l) Attach the nut 26F-300 and the washer 26F-290 to the lavatory structure.

(m) Attach the clamp 26F-310 with the screw 26F-280 and the washer 26F-290 to the lavatory structure.

TASK 25-41-51-400-802-H01
D2549010605600 D2549030602400

15. Assembly of the Electrical System

A. General

This task gives you the installation procedures of the component.

B. Job Set-up Information

(1) Not applicable

C. Procedure

WARNING: BE CAREFUL WHEN YOU USE SOLVENTS/CLEANING AGENTS, SEALANTS AND OTHER MATERIALS. OBEY THE MATERIAL MANUFACTURER'S INSTRUCTIONS AND THE LOCAL REGULATIONS. MAKE SURE THAT THERE IS A GOOD FLOW OF AIR THROUGH THE WORK AREA. DO NOT BREATHE THE FUMES. DO NOT SMOKE. DO NOT USE THESE MATERIALS NEAR A FLAME, SPARKS OR SOURCES OF HEAT. USE PROTECTIVE CLOTHING, GOGGLES AND GLOVES. IF YOU GET ONE OF THESE MATERIALS ON YOUR SKIN OR IN YOUR EYES, FLUSH IT AWAY WITH A FLOW OF CLEAN WATER. IF YOU GET ONE OF THESE MATERIALS IN YOUR MOUTH, GET IMMEDIATE MEDICAL AID. IN GENERAL, THESE MATERIALS ARE POISONOUS, FLAMMABLE AND SKIN IRRITANTS.

CAUTION: DO ALL THE WORK ON A CLEAN, SOFT SURFACE TO PREVENT DAMAGE TO THE COMPONENTS.

CAUTION: MAKE SURE THAT ALL THE PARTS ARE CLEAN BEFORE YOU ASSEMBLE THEM.

SUB TASK 25-41-51-440-015-A01

1. Assembly of the Electrical System (26G-1)

(a) Attach the microswitch 26G-190 with the screws 26G-200.

(b) Attach the screws 26G-120, 26G-330, the washers 26G-030, 26G-320 and the nuts 26G-340 to the lavatory structure.

(c) Install and assemble the 2065VU switch panel 26G-470 as follows:

1 Attach the switch button switch 26G-560 to the printed circuit board PCB 26G-530.

2 Attach the protective lens 26G-570 to the switch button switch 26G-560.

3 Install and assemble the switch housing assembly 26G-480 as follows:
a Attach the switch housing 26G-490 with the screws 26G-540 and the spring washers 26G-550 to the printed circuit board PCB 26G-530.

4 Attach the plugs 26G-580 to the printed circuit board PCB 26G-530.

(d) Attach the mini inverter 26G-430 with the spacers 26G-440 and the screws 26G-450 to the lavatory structure.

NOTE: For further instructions, see CMMV 25-44-01_D2361 (mini inverter).

(e) Attach the loudspeaker 26G-180 to the lavatory structure.

NOTE: For further instructions, see CMMV 23-31-12_D7320 (loudspeaker).

(f) Install and assemble the light assembly 26G-130 as follows:

NOTE: For further instructions, see CMMV 33-24-05_DD704 (light assembly).

1 Attach the lamp 26G-170, the incandescent lamp 26G-160, the housing 26G-150 and the lens 26G-140.

(g) Attach the call light 26G-100 to the lavatory structure.

NOTE: For further instructions, see CMMV 33-20-01_DD704 (call light).

(h) Attach the brackets 26G-110 with the screws 26G-120 and the washers 26G-030 to the lavatory structure.

(i) Attach the smoke detector sealing 26G-050 and the smoke detector 26G-020 with the screws 26G-040 and the washers 26G-030 to the lavatory structure.

NOTE: For further instructions, see CMMV 26-16-16_F4885 (smoke detector).

(j) See Assembly of the Cable Harness Assembly for the assembly procedure of the cable harness assembly 26G-010.

(k) Connect the cables, the applicable bonding straps 26G-230, 26G-240, 26G-250, 26G-260, 26G-270 and the cable harness assembly 26G-010 to the electrical components.

(l) Install the ami cabin attendant seat cable 26G-350 as follows:

1 Attach the ami cabin attendant seat cable 26G-350, the connector back-shell 26G-390 and the plug connectors 26G-380, 26G-400 to the lavatory structure.

(m) Attach the nut 26G-300 and the washer 26G-290 to the lavatory structure.

(n) Attach the clamp 26G-310 with the screw 26G-280 and the washer 26G-290 to the lavatory structure.

TASK 25-41-51-400-802-J01
D2549020712000

16. Assembly of the Electrical System

A. General

This task gives you the installation procedures of the component.

B. Job Set-up Information

(1) Not applicable

C. Procedure

WARNING: BE CAREFUL WHEN YOU USE SOLVENTS/CLEANING AGENTS, SEALANTS AND OTHER MATERIALS. OBEY THE MATERIAL MANUFACTURER'S INSTRUCTIONS AND THE LOCAL REGULATIONS. MAKE SURE THAT THERE IS A GOOD FLOW OF AIR THROUGH THE WORK AREA. DO NOT BREATHE THE FUMES. DO NOT SMOKE. DO NOT USE THESE MATERIALS NEAR A FLAME, SPARKS OR SOURCES OF HEAT. USE PROTECTIVE CLOTHING, GOGGLES AND GLOVES. IF YOU GET ONE OF THESE MATERIALS ON YOUR SKIN OR IN YOUR EYES, FLUSH IT AWAY WITH A FLOW OF CLEAN WATER. IF YOU GET ONE OF THESE MATERIALS IN YOUR MOUTH, GET IMMEDIATE MEDICAL AID. IN GENERAL, THESE MATERIALS ARE POISONOUS, FLAMMABLE AND SKIN IRRITANTS.

CAUTION: DO ALL THE WORK ON A CLEAN, SOFT SURFACE TO PREVENT DAMAGE TO THE COMPONENTS.

CAUTION: MAKE SURE THAT ALL THE PARTS ARE CLEAN BEFORE YOU ASSEMBLE THEM.

SUB TASK 25-41-51-440-016-A01

1. Assembly of the Electrical System (26H-1)

(a) Attach the microswitch 26H-070 with the screws 26H-080.

(b) Attach the light assembly 26H-180 with the screws 26H-030, the washers 26H-020 and the nut 26H-040.

NOTE: For further instructions, see CMMV 33-24-05_DD704 (light assembly).

(c) Attach the brackets 26H-050 with the screws 26H-060 and the washers 26H-020 to the lavatory structure.

(d) See Assembly of the Cable Harness Assembly for the assembly procedure of the cable harness assembly 26H-010.

(e) Connect the cables and the cable harness assembly 26H-010 to the electrical components.

(f) Attach the ami cabin attendant seat cable 26H-130 to the lavatory structure.

(g) Attach the screws 26H-060, the washers 26H-020, 26H-110 and the nuts 26H-120 to the lavatory structure.

TASK 25-41-51-400-802-K01
D2549020708000 D2549020713800 D2549030606400

17. Assembly of the Electrical System

A. General

This task gives you the installation procedures of the component.

B. Job Set-up Information

(1) Not applicable

C. Procedure

WARNING: BE CAREFUL WHEN YOU USE SOLVENTS/CLEANING AGENTS, SEALANTS AND OTHER MATERIALS. OBEY THE MATERIAL MANUFACTURER'S INSTRUCTIONS AND THE LOCAL REGULATIONS. MAKE SURE THAT THERE IS A GOOD FLOW OF AIR THROUGH THE WORK AREA. DO NOT BREATHE THE FUMES. DO NOT SMOKE. DO NOT USE THESE MATERIALS NEAR A FLAME, SPARKS OR SOURCES OF HEAT. USE PROTECTIVE CLOTHING, GOGGLES AND GLOVES. IF YOU GET ONE OF THESE MATERIALS ON YOUR SKIN OR IN YOUR EYES, FLUSH IT AWAY WITH A FLOW OF CLEAN WATER. IF YOU GET ONE OF THESE MATERIALS IN YOUR MOUTH, GET IMMEDIATE MEDICAL AID. IN GENERAL, THESE MATERIALS ARE POISONOUS, FLAMMABLE AND SKIN IRRITANTS.

CAUTION: DO ALL THE WORK ON A CLEAN, SOFT SURFACE TO PREVENT DAMAGE TO THE COMPONENTS.

CAUTION: MAKE SURE THAT ALL THE PARTS ARE CLEAN BEFORE YOU ASSEMBLE THEM.

SUB TASK 25-41-51-440-017-A01

1. Assembly of the Electrical System (26J-1)

(a) Attach the microswitch 26J-190 with the screws 26J-200.

(b) Attach the screws 26J-120, 26J-330, the washers 26J-030, 26J-320 and the nuts 26J-340 to the lavatory structure.

(c) Install and assemble the 2065VU switch panel 26J-470 as follows:

1 Attach the switch button switch 26J-560 to the printed circuit board PCB 26J-530.

2 Attach the protective lens 26J-570 to the switch button switch 26J-560.

3 Install and assemble the switch housing assembly 26J-480 as follows:
a Attach the switch housing 26J-490 with the screws 26J-540 and the spring washers 26J-550 to the printed circuit board PCB 26J-530.

4 Attach the plugs 26J-580 to the printed circuit board PCB 26J-530.

(d) Attach the mini inverter 26J-430 with the spacers 26J-440 and the screws 26J-450 to the lavatory structure.

NOTE: For further instructions, see CMMV 25-44-01_D2361 (mini inverter).

(e) Attach the loudspeaker 26J-180 to the lavatory structure.

NOTE: For further instructions, see CMMV 23-31-12_D7320 (loudspeaker).

(f) Install and assemble the light assembly 26J-130 as follows:

NOTE: For further instructions, see CMMV 33-24-05_DD704 (light assembly).

1 Attach the lamp 26J-170, the incandescent lamp 26J-160, the housing 26J-150 and the lens 26J-140.

(g) Attach the call light 26J-100 to the lavatory structure.

NOTE: For further instructions, see CMMV 33-20-01_DD704 (call light).

(h) Attach the brackets 26J-110 with the screws 26J-120 and the washers 26J-030 to the lavatory structure.

(i) Attach the smoke detector sealing 26J-050 and the smoke detector 26J-020 with the screws 26J-040 and the washers 26J-030 to the lavatory structure.

NOTE: For further instructions, see CMMV 26-16-16_F4885 (smoke detector).

(j) See Assembly of the Cable Harness Assembly for the assembly procedure of the cable harness assembly 26J-010.

(k) Connect the cables, the applicable bonding straps 26J-230, 26J-240, 26J-250, 26J-260, 26J-270 and the cable harness assembly 26J-010 to the electrical components.

(l) Install the ami cabin attendant seat cable 26J-350 as follows:

1 Attach the ami cabin attendant seat cable 26J-350, the connector back-shell 26J-390 and the plug connectors 26J-380, 26J-400 to the lavatory structure.

(m) Attach the nut 26J-300 and the washer 26J-290 to the lavatory structure.

(n) Attach the clamp 26J-310 with the screw 26J-280 and the washer 26J-290 to the lavatory structure.

TASK 25-41-51-400-802-L01

D2549010605000 D2549010605200 D2549010605800 D2549010606000 D2549010606200
D2549010606400 D2549010606600 D2549010606800 D2549010608200 D2549010608400
D2549010609600 D2549020502200 D2549020507400 D2549020507600 D2549020508000
D2549020508200 D2549020508400 D2549020508600 D2549020508800 D2549020509000
D2549020509200 D2549020509600 D2549020509800 D2549020510000 D2549020512600
D2549020512800 D2549020513600 D2549020514200 D2549020514400 D2549020705800
D2549020709600 D2549020710600 D2549020713000 D2549020713200 D2549020714600
D2549020801000 D2549030402000 D2549030403400 D2549030405200 D2549030503800
D2549030600200 D2549030604200 D2549030605400 D2549030605600 D2549030606000
D2549030606200 D2549030606600 D2549030606800 D2549030607000 D2549030607200
D2549030607400 D2549030607600 D2549030607800 D2549030608200 D2549030608400
D2549030608600 D2549030608800 D2549030609200 D2549030610600 D2549030612800
D2549030614200 R225401115-000 R225401134-008 R225401134-010 R225401134-012
R225401134-024 R225401134-026 R225401134-028 R225401134-030 R225401134-032
R225401134-034 R225401136-000 R225401136-022 R225401145-004 R225401152-006
R225401168-000 R225401168-020 R225401172-012 R225401172-014 R225401183-008
R225401192-000 R225401196-002 R225401196-034 R225401196-048 R225401199-002
R225401600-004 R225401605-000 R225401611-008 R225401613-000 R225401618-000
R225401618-002 R225401619-000

18. Assembly of the Electrical System

A. General

This task gives you the installation procedures of the component.

B. Job Set-up Information

(1) Not applicable

C. Procedure

WARNING: BE CAREFUL WHEN YOU USE SOLVENTS/CLEANING AGENTS, SEALANTS AND OTHER MATERIALS. OBEY THE MATERIAL MANUFACTURER'S INSTRUCTIONS AND THE LOCAL REGULATIONS. MAKE SURE THAT THERE IS A GOOD FLOW OF AIR THROUGH THE WORK AREA. DO NOT BREATHE THE FUMES. DO NOT SMOKE. DO NOT USE THESE MATERIALS NEAR A FLAME, SPARKS OR SOURCES OF HEAT. USE PROTECTIVE CLOTHING, GOGGLES AND GLOVES. IF YOU GET ONE OF THESE MATERIALS ON YOUR SKIN OR IN YOUR EYES, FLUSH IT AWAY WITH A FLOW OF CLEAN WATER. IF YOU GET ONE OF THESE MATERIALS IN YOUR MOUTH, GET IMMEDIATE MEDICAL AID. IN GENERAL, THESE MATERIALS ARE POISONOUS, FLAMMABLE AND SKIN IRRITANTS.

CAUTION: **DO ALL THE WORK ON A CLEAN, SOFT SURFACE TO PREVENT DAMAGE TO THE COMPONENTS.**

CAUTION: **MAKE SURE THAT ALL THE PARTS ARE CLEAN BEFORE YOU ASSEMBLE THEM.**

SUB TASK 25-41-51-440-018-A01

D2549010605000 D2549010605200 D2549010605800 D2549010606000 D2549010606200 D2549010606400 D2549010606600 D2549010606800 D2549010608200 D2549010608400 D2549010609600 D2549020502200 D2549020507400 D2549020507600 D2549020508000 D2549020508200 D2549020508400 D2549020508600 D2549020508800 D2549020509000 D2549020509200 D2549020509600 D2549020509800 D2549020510000 D2549020512600 D2549020514200 D2549020514400 D2549020705800 D2549020709600 D2549020710600 D2549020713000 D2549020713200 D2549020714600 D2549030503800 D2549030600200 D2549030604200 D2549030605400 D2549030605600 D2549030606000 D2549030606200 D2549030606600 D2549030606800 D2549030607000 D2549030607200 D2549030607600 D2549030607800 D2549030608200 D2549030608400 D2549030608600 D2549030609200 D2549030610600 D2549030612800 D2549030614200 R225401115-000 R225401134-008 R225401134-024 R225401134-026 R225401134-028 R225401136-000 R225401136-022 R225401145-004 R225401152-006 R225401168-000 R225401168-020 R225401172-012 R225401172-014 R225401183-008 R225401192-000 R225401196-002 R225401196-034 R225401196-048 R225401199-002 R225401600-004 R225401605-000 R225401611-008 R225401613-000 R225401618-000 R225401618-002 R225401619-000

1. Assembly of the Electrical System (26K-1)

   (a) Attach the microswitch 26K-190 with the screws 26K-200.

   (b) Attach the screws 26K-120, 26K-330, the washers 26K-030, 26K-320 and the nuts 26K-340 to the lavatory structure.

   (c) Attach the mini inverter 26K-430 with the spacers 26K-440 and the screws 26K-450 to the lavatory structure.

   NOTE: **For further instructions, see CMMV 25-44-01_D2361 (mini inverter).**

   (d) Attach the loudspeaker 26K-180 to the lavatory structure.

   NOTE: **For further instructions, see CMMV 23-31-12_D7320 (loudspeaker).**

(e) Install and assemble the light assembly 26K-130 as follows:

NOTE: For further instructions, see CMMV 33-24-05_DD704 (light assembly).

1 Attach the lamp 26K-170, the incandescent lamp 26K-160, the housing 26K-150 and the lens 26K-140.

(f) Attach the call light 26K-100 to the lavatory structure.

NOTE: For further instructions, see CMMV 33-20-01_DD704 (call light).

(g) Attach the brackets 26K-110 with the screws 26K-120 and the washers 26K-030 to the lavatory structure.

(h) Attach the smoke detector sealing 26K-050 and the smoke detector 26K-020 with the screws 26K-040 and the washers 26K-030 to the lavatory structure.

NOTE: For further instructions, see CMMV 26-16-16_F4885 (smoke detector).

(i) See Assembly of the Cable Harness Assembly for the assembly procedure of the cable harness assembly 26K-010.

(j) Connect the cables, the applicable bonding straps 26K-230, 26K-240, 26K-250, 26K-260, 26K-270 and the cable harness assembly 26K-010 to the electrical components.

(k) Install the ami cabin attendant seat cable 26K-350 as follows:

1 Attach the ami cabin attendant seat cable 26K-350, the connector back-shell 26K-390 and the plug connectors 26K-380, 26K-400 to the lavatory structure.

(l) Attach the nut 26K-300 and the washer 26K-290 to the lavatory structure.

(m) Attach the clamp 26K-310 with the screw 26K-280 and the washer 26K-290 to the lavatory structure.

SUB TASK 25-41-51-440-018-B01
D2549020512800 D2549020513600 D2549020801000 D2549030402000 D2549030403400 D2549030405200 R225401134-010 R225401134-012 R225401134-030 R225401134-032 R225401134-034

2. Assembly of the Electrical System (26K-1)

(a) Attach the microswitch 26K-190 with the screws 26K-200.

(b) Attach the screws 26K-120, 26K-330, the washers 26K-030, 26K-320 and the nuts 26K-340 to the lavatory structure.

(c) Attach the mini inverter 26K-430 with the spacers 26K-440 and the screws 26K-450 to the lavatory structure.

NOTE: For further instructions, see CMMV 25-44-01_D2361 (mini inverter).

(d) Attach the loudspeaker 26K-180 to the lavatory structure.

NOTE: For further instructions, see CMMV 23-31-12_D7320 (loudspeaker).

(e) Attach the light assembly 26K-130 to the lavatory structure.

NOTE: For further instructions, see CMMV 33-27-01_DD704 (light assembly).

(f) Attach the call light 26K-100 to the lavatory structure.

NOTE: For further instructions, see CMMV 33-20-01_DD704 (call light).

(g) Attach the brackets 26K-110 with the screws 26K-120 and the washers 26K-030 to the lavatory structure.

(h) Attach the smoke detector sealing 26K-050 and the smoke detector 26K-020 with the screws 26K-040 and the washers 26K-030 to the lavatory structure.

NOTE: For further instructions, see CMMV 26-16-16_F4885 (smoke detector).

(i) See Assembly of the Cable Harness Assembly for the assembly procedure of the cable harness assembly 26K-010.

(j) Connect the cables, the applicable bonding straps 26K-230, 26K-240, 26K-250, 26K-260, 26K-270 and the cable harness assembly 26K-010 to the electrical components.

(k) Install the ami cabin attendant seat cable 26K-350 as follows:

1 Attach the ami cabin attendant seat cable 26K-350, the connector back-shell 26K-390 and the plug connectors 26K-380, 26K-400 to the lavatory structure.

(l) Attach the nut 26K-300 and the washer 26K-290 to the lavatory structure.

(m) Attach the clamp 26K-310 with the screw 26K-280 and the washer 26K-290 to the lavatory structure.

SUB TASK 25-41-51-440-018-C01
D2549030607400 D2549030608800

3. Assembly of the Electrical System (26K-1)

(a) Attach the microswitch 26K-190 with the screws 26K-200.

(b) Attach the screws 26K-120, 26K-330, the washers 26K-030, 26K-320 and the nuts 26K-340 to the lavatory structure.

(c) Attach the mini inverter 26K-430 with the spacers 26K-440 and the screws 26K-450 to the lavatory structure.

NOTE: For further instructions, see CMMV 25-44-01_D2361 (mini inverter).

(d) Attach the loudspeaker 26K-180 to the lavatory structure.

NOTE: For further instructions, see CMMV 23-31-12_D7320 (loudspeaker).

(e) Install and assemble the light assembly 26K-130 as follows:

NOTE: For further instructions, see CMMV 33-24-05_DD704 (light assembly).

1 Attach the lamp 26K-170, the incandescent lamp 26K-160, the housing 26K-150 and the lens 26K-140.

(f) Attach the call light 26K-100 to the lavatory structure.

NOTE: For further instructions, see CMMV 33-20-01_DD704 (call light).

(g) Attach the brackets 26K-110 with the screws 26K-120 and the washers 26K-030 to the lavatory structure.

(h) Attach the smoke detector sealing 26K-050 and the smoke detector 26K-020 with the screws 26K-040 and the washers 26K-030 to the lavatory structure.

NOTE: For further instructions, see CMMV 26-16-16_F4885 (smoke detector).

(i) See Assembly of the Cable Harness Assembly for the assembly procedure of the cable harness assembly 26K-010.

(j) Connect the cables, the applicable bonding straps 26K-230, 26K-240, 26K-250, 26K-255, 26K-260, 26K-270 and the cable harness assembly 26K-010 to the electrical components.

(k) Install the ami cabin attendant seat cable 26K-350 as follows:

1 Attach the ami cabin attendant seat cable 26K-350, the connector back-shell 26K-390 and the plug connectors 26K-380, 26K-400 to the lavatory structure.

(l) Attach the screw 26K-285 and the washer 26K-295 to the lavatory structure.

(m) Attach the nut 26K-300 and the washer 26K-290 to the lavatory structure.

(n) Attach the clamp 26K-310 with the screw 26K-280 and the washer 26K-290 to the lavatory structure.

TASK 25-41-51-400-802-M01
D2549020712600

19. Assembly of the Electrical System

A. General

This task gives you the installation procedures of the component.

B. Job Set-up Information

(1) Not applicable

C. Procedure

WARNING: BE CAREFUL WHEN YOU USE SOLVENTS/CLEANING AGENTS, SEALANTS AND OTHER MATERIALS. OBEY THE MATERIAL MANUFACTURER'S INSTRUCTIONS AND THE LOCAL REGULATIONS. MAKE SURE THAT THERE IS A GOOD FLOW OF AIR THROUGH THE WORK AREA. DO NOT BREATHE THE FUMES. DO NOT SMOKE. DO NOT USE THESE MATERIALS NEAR A FLAME, SPARKS OR SOURCES OF HEAT. USE PROTECTIVE CLOTHING, GOGGLES AND GLOVES. IF YOU GET ONE OF THESE MATERIALS ON YOUR SKIN OR IN YOUR EYES, FLUSH IT AWAY WITH A FLOW OF CLEAN WATER. IF YOU GET ONE OF THESE MATERIALS IN YOUR MOUTH, GET IMMEDIATE MEDICAL AID. IN GENERAL, THESE MATERIALS ARE POISONOUS, FLAMMABLE AND SKIN IRRITANTS.

CAUTION: DO ALL THE WORK ON A CLEAN, SOFT SURFACE TO PREVENT DAMAGE TO THE COMPONENTS.

CAUTION: MAKE SURE THAT ALL THE PARTS ARE CLEAN BEFORE YOU ASSEMBLE THEM.

SUB TASK 25-41-51-440-019-A01

1. Assembly of the Electrical System (26L-1)

(a) Attach the microswitch 26L-070 with the screws 26L-080.

(b) Attach the mini inverter 26L-190 with the spacers 26L-200 and the screws 26L-210 to the lavatory structure.

NOTE: For further instructions, see CMMV 25-44-01_D2361 (mini inverter).

(c) Attach the light assembly 26L-180 with the screws 26L-030, the washers 26L-020 and the nut 26L-040.

NOTE: For further instructions, see CMMV 33-24-05_DD704 (light assembly).

(d) Attach the brackets 26L-050 with the screws 26L-060 and the washers 26L-020 to the lavatory structure.

(e) See Assembly of the Cable Harness Assembly for the assembly procedure of the cable harness assembly 26L-010.

(f) Connect the cables and the cable harness assembly 26L-010 to the electrical components.

(g) Attach the ami cabin attendant seat cable 26L-130 to the lavatory structure.

(h) Attach the bracket 26L-050 with the screws 26L-060, the washers 26L-110 and the nuts 26L-120 to the lavatory structure.

TASK 25-41-51-400-802-N01

D2549010400200 D2549010400400 D2549010400600 D2549010402000 D2549010607000
D2549010607200 D2549010607400 D2549010607600 D2549010607800 D2549010608600
D2549010608800 D2549010609000 D2549010609200 D2549010609400 D2549010610000
D2549010610200 D2549010610400 D2549010610800 D2549010611000 D2549010611200
D2549010611400 D2549010611600 D2549010612000 D2549010612200 D2549010612400
D2549010612600 D2549010613000 D2549010613200 D2549010613400 D2549010613800
D2549010614200 D2549010614600 D2549020400200 D2549020505600 D2549020510600
D2549020510800 D2549020511000 D2549020511200 D2549020511600 D2549020511800
D2549020512000 D2549020512200 D2549020512400 D2549020513000 D2549020513200
D2549020513400 D2549020514000 D2549020514600 D2549020711600 D2549020714000
D2549020800000 D2549020800200 D2549020800400 D2549020800600 D2549020800800
D2549020801200 D2549020801400 D2549020801600 D2549020801800 D2549020802000
D2549020802200 D2549020802400 D2549020802600 D2549020802800 D2549020803000
D2549020803200 D2549020803400 D2549020803600 D2549020803800 D2549020804000
D2549020804200 D2549020804800 D2549020805200 D2549020805600 D2549020805800
D2549020806200 D2549020806400 D2549020806600 D2549020806800 D2549020807000
D2549020807400 D2549020807600 D2549020807800 D2549020808400 D2549020808600
D2549020808800 D2549020809000 D2549020809400 D2549020810000 D2549020810400
D2549020810600 D2549020811400 D2549020811600 D2549020812000 D2549020812200
D2549020812400 D2549020813000 D2549020813600 D2549020814000 D2549020814400
D2549020814600 D2549020814800 D2549030400000 D2549030400200 D2549030400400
D2549030400600 D2549030401200 D2549030401400 D2549030401800 D2549030402200
D2549030402600 D2549030402800 D2549030403000 D2549030403600 D2549030403800
D2549030404200 D2549030404800 D2549030405000 D2549030405400 D2549030405800
D2549030406000 D2549030406400 D2549030406600 D2549030406800 D2549030407200
D2549030409800 D2549030603200 D2549030608000 D2549030609000 D2549030609800
D2549030610000 D2549030610400 D2549030611000 D2549030611200 D2549030611400
D2549030611600 D2549030611800 D2549030612000 D2549030612200 D2549030612400
D2549030612600 D2549030613200 D2549030613400 D2549030613800 D2549030614000
D2549030614400 D2549030614800 R225401136-004 R225401136-018 R225401137-016
R225401145-006 R225401145-008 R225401145-010 R225401145-014 R225401152-008
R225401168-002 R225401168-008 R225401168-010 R225401168-012 R225401168-022
R225401168-024 R225401168-026 R225401172-000 R225401172-016 R225401172-018
R225401183-000 R225401183-002 R225401192-002 R225401196-004 R225401196-006
R225401196-036 R225401196-038 R225401196-044 R225401196-050 R225401196-052
R225401199-004 R225401199-006 R225401199-008 R225401605-002 R225401609-000
R225401611-010 R225401614-000 R225401619-002 R225401622-000 R225401622-002
R225401625-000 R225401629-000 R225401629-002 R225401639-000 R225401643-000
R225401643-004 R225401646-000 R225401647-000 R225401648-000 R225401648-002
R225401656-000 R225401656-002 R225401658-000 R225401693-000

20. Assembly of the Electrical System

A. General

This task gives you the installation procedures of the component.

B. Job Set-up Information

(1) Not applicable

C. Procedure

WARNING: **BE CAREFUL WHEN YOU USE SOLVENTS/CLEANING AGENTS, SEALANTS AND OTHER MATERIALS. OBEY THE MATERIAL MANUFACTURER'S INSTRUCTIONS AND THE LOCAL REGULATIONS. MAKE SURE THAT THERE IS A GOOD FLOW OF AIR THROUGH THE WORK AREA. DO NOT BREATHE THE FUMES. DO NOT SMOKE. DO NOT USE THESE MATERIALS NEAR A FLAME, SPARKS OR SOURCES OF HEAT. USE PROTECTIVE CLOTHING, GOGGLES AND GLOVES. IF YOU GET ONE OF THESE MATERIALS ON YOUR SKIN OR IN YOUR EYES, FLUSH IT AWAY WITH A FLOW OF CLEAN WATER. IF YOU GET ONE OF THESE MATERIALS IN YOUR MOUTH, GET IMMEDIATE MEDICAL AID. IN GENERAL, THESE MATERIALS ARE POISONOUS, FLAMMABLE AND SKIN IRRITANTS.**

CAUTION: **DO ALL THE WORK ON A CLEAN, SOFT SURFACE TO PREVENT DAMAGE TO THE COMPONENTS.**

CAUTION: **MAKE SURE THAT ALL THE PARTS ARE CLEAN BEFORE YOU ASSEMBLE THEM.**

SUB TASK 25-41-51-440-020-A01

D2549010400200 D2549010400400 D2549010400600 D2549010402000
D2549010607000 D2549010607200 D2549010607400 D2549010607600
D2549010607800 D2549010608600 D2549010608800 D2549010609000
D2549010609200 D2549010609400 D2549010610000 D2549010610200
D2549010610400 D2549010610800 D2549010611000 D2549010611200
D2549010611400 D2549010611600 D2549010612000 D2549010612200
D2549010612400 D2549010612600 D2549010613000 D2549010613200
D2549010613400 D2549010613800 D2549010614200 D2549010614600
D2549020400200 D2549020505600 D2549020510600 D2549020510800
D2549020511000 D2549020511200 D2549020511600 D2549020511800
D2549020512000 D2549020512200 D2549020512400 D2549020513000
D2549020513200 D2549020513400 D2549020514000 D2549020514600
D2549020711600 D2549020714000 D2549020800000 D2549020800200
D2549020800400 D2549020800600 D2549020800800 D2549020801200
D2549020801400 D2549020801600 D2549020801800 D2549020802000
D2549020802200 D2549020802400 D2549020802600 D2549020802800
D2549020803000 D2549020803200 D2549020803400 D2549020803600
D2549020803800 D2549020804000 D2549020804200 D2549020804800
D2549020805200 D2549020805600 D2549020805800 D2549020806200
D2549020806400 D2549020806600 D2549020806800 D2549020807000

D2549020807400 D2549020807600 D2549020807800 D2549020808400 D2549020808600 D2549020808800 D2549020809000 D2549020809400 D2549020810000 D2549020810400 D2549020810600 D2549020811400 D2549020811600 D2549020812000 D2549020812200 D2549020812400 D2549020813000 D2549020813600 D2549020814000 D2549020814400 D2549020814600 D2549020814800 D2549030400000 D2549030400200 D2549030400400 D2549030400600 D2549030401200 D2549030401400 D2549030401800 D2549030402200 D2549030402600 D2549030402800 D2549030403000 D2549030403800 D2549030404200 D2549030404800 D2549030405000 D2549030405400 D2549030405800 D2549030406000 D2549030406400 D2549030406600 D2549030406800 D2549030407200 D2549030409800 D2549030603200 D2549030608000 D2549030609000 D2549030609800 D2549030610000 D2549030610400 D2549030611000 D2549030611200 D2549030611600 D2549030611800 D2549030612000 D2549030612200 D2549030612400 D2549030612600 D2549030613200 D2549030613400 D2549030613800 D2549030614000 D2549030614400 D2549030614800 R225401136-004 R225401136-018 R225401137-016 R225401145-006 R225401145-008 R225401145-010 R225401145-014 R225401152-008 R225401168-002 R225401168-008 R225401168-010 R225401168-012 R225401168-022 R225401168-024 R225401168-026 R225401172-000 R225401172-016 R225401172-018 R225401183-000 R225401183-002 R225401192-002 R225401196-004 R225401196-006 R225401196-036 R225401196-038 R225401196-044 R225401196-050 R225401196-052 R225401199-004 R225401199-006 R225401199-008 R225401605-002 R225401609-000 R225401611-010 R225401614-000 R225401619-002 R225401622-000 R225401622-002 R225401625-000 R225401629-000 R225401629-002 R225401639-000 R225401643-000 R225401643-004 R225401646-000 R225401647-000 R225401648-000 R225401648-002 R225401656-000 R225401656-002 R225401658-000 R225401693-000

1. Assembly of the Electrical System (26M-1)

   (a) Attach the microswitch 26M-190 with the screws 26M-200.

   (b) Attach the mini inverter 26M-430 with the spacers 26M-440 and the screws 26M-450 to the lavatory structure.

   NOTE: For further instructions, see CMMV 25-44-01_D2361 (mini inverter).

   (c) Attach the loudspeaker 26M-180 to the lavatory structure.

   NOTE: For further instructions, see CMMV 23-31-12_D7320 (loudspeaker).

   (d) Attach the light assembly 26M-130 to the lavatory structure.

   NOTE: For further instructions, see CMMV 33-27-01_DD704 (light assembly).

(e) Attach the call light 26M-100 to the lavatory structure.

NOTE: For further instructions, see CMMV 33-22-01_DD704 (call light).

(f) Attach the brackets 26M-110 with the screws 26M-120 and the washers 26M-030 to the lavatory structure.

(g) Attach the smoke detector sealing 26M-050 and the smoke detector 26M-020 with the screws 26M-040, the washers 26M-030 and the nuts 26M-470 to the lavatory structure.

NOTE: For further instructions, see CMMV 26-16-16_F4885 (smoke detector).

(h) See Assembly of the Cable Harness Assembly for the assembly procedure of the cable harness assembly 26M-010.

(i) Connect the cables, the applicable bonding straps 26M-230, 26M-240, 26M-250, 26M-260, 26M-270 and the cable harness assembly 26M-010 to the electrical components.

(j) Attach the ami cabin attendant seat cable 26M-350, the connector backshell 26M-390 and the plug connectors 26M-380, 26M-400 to the lavatory structure.

(k) Attach the screws 26M-120, 26M-330, the washers 26M-030, 26M-320 and the nuts 26M-340 to the lavatory structure.

(l) Attach the nut 26M-300 and the washer 26M-290 to the lavatory structure.

(m) Attach the clamp 26M-310 with the screw 26M-280 and the washer 26M-290 to the lavatory structure.

SUB TASK 25-41-51-440-020-B01
D2549030403600 D2549030611400

2. Assembly of the Electrical System (26M-1)

(a) Attach the microswitch 26M-190 with the screws 26M-200.

(b) Attach the loudspeaker 26M-180 to the lavatory structure.

NOTE: For further instructions, see CMMV 23-31-12_D7320 (loudspeaker).

(c) Attach the light assembly 26M-130 to the lavatory structure.

NOTE: For further instructions, see CMMV 33-27-01_DD704 (light assembly).

(d) Attach the call light 26M-100 to the lavatory structure.

NOTE: For further instructions, see CMMV 33-22-01_DD704 (call light).

(e) Attach the brackets 26M-110 with the screws 26M-120 and the washers 26M-030 to the lavatory structure.

(f) Attach the smoke detector sealing 26M-050 and the smoke detector 26M-020 with the screws 26M-040, the washers 26M-030 and the nuts 26M-470 to the lavatory structure.

NOTE: For further instructions, see CMMV 26-16-16_F4885 (smoke detector).

(g) See Assembly of the Cable Harness Assembly for the assembly procedure of the cable harness assembly 26M-010.

(h) Connect the cables, the applicable bonding straps 26M-230, 26M-240, 26M-250, 26M-260, 26M-270 and the cable harness assembly 26M-010 to the electrical components.

(i) Attach the ami cabin attendant seat cable 26M-350, the connector backshell 26M-390 and the plug connectors 26M-380, 26M-400 to the lavatory structure.

(j) Attach the screws 26M-120, 26M-330, the washers 26M-030, 26M-320 and the nuts 26M-340 to the lavatory structure.

(k) Attach the nut 26M-300 and the washer 26M-290 to the lavatory structure.

(l) Attach the clamp 26M-310 with the screw 26M-280 and the washer 26M-290 to the lavatory structure.

TASK 25-41-51-400-802-P01
D2549010609800 D2549010611800 D2549010614400 D2549020510400 D2549020514800 D2549020805000 D2549020805400 D2549020808200 D2549020809800 D2549020813200 D2549020813400 D2549020814200 D2549030404000 D2549030408000 D2549030613600 D2549030614600 R225401662-000

21. Assembly of the Electrical System

A. General

This task gives you the installation procedures of the component.

B. Job Set-up Information

(1) Not applicable

C. Procedure

WARNING: BE CAREFUL WHEN YOU USE SOLVENTS/CLEANING AGENTS, SEALANTS AND OTHER MATERIALS. OBEY THE MATERIAL MANUFACTURER'S INSTRUCTIONS AND THE LOCAL REGULATIONS. MAKE SURE THAT THERE IS A GOOD FLOW OF AIR THROUGH THE WORK AREA. DO NOT BREATHE THE FUMES. DO NOT SMOKE. DO NOT USE THESE MATERIALS NEAR A FLAME, SPARKS OR SOURCES OF HEAT. USE PROTECTIVE CLOTHING, GOGGLES AND GLOVES. IF YOU GET ONE OF THESE MATERIALS ON YOUR SKIN OR IN YOUR EYES, FLUSH IT AWAY WITH A FLOW OF CLEAN WATER. IF YOU GET ONE OF THESE MATERIALS IN YOUR MOUTH, GET IMMEDIATE MEDICAL AID. IN GENERAL, THESE MATERIALS ARE POISONOUS, FLAMMABLE AND SKIN IRRITANTS.

CAUTION: DO ALL THE WORK ON A CLEAN, SOFT SURFACE TO PREVENT DAMAGE TO THE COMPONENTS.

CAUTION: MAKE SURE THAT ALL THE PARTS ARE CLEAN BEFORE YOU ASSEMBLE THEM.

SUB TASK 25-41-51-440-021-A01
D2549010609800 D2549010611800 D2549020514800 D2549020805000 D2549020808200 D2549020809800 D2549020813200 D2549020813400 D2549020814200 D2549030408000 D2549030614600 R225401662-000

1. Assembly of the Electrical System (26N-1)

(a) Attach the microswitch 26N-190 with the screws 26N-200.

(b) Attach the screws 26N-120, 26N-330, the washers 26N-030, 26N-320 and the nuts 26N-340 to the lavatory structure.

(c) Install and assemble the 2065VU switch panel 26N-470 as follows:

1 Attach the switch button switch 26N-560 to the printed circuit board PCB 26N-530.

2 Attach the protective lens 26N-570 to the switch button switch 26N-560.

3 Install and assemble the switch housing assembly 26N-480 as follows:
a Attach the switch housing 26N-490 with the screws 26N-540 and the spring washers 26N-550 to the printed circuit board PCB 26N-530.

4 Attach the plugs 26N-580 to the printed circuit board PCB 26N-530.

(d) Attach the mini inverter 26N-430 with the spacers 26N-440 and the screws 26N-450 to the lavatory structure.

NOTE: For further instructions, see CMMV 25-44-01_D2361 (mini inverter).

(e) Attach the loudspeaker 26N-180 to the lavatory structure.

NOTE: For further instructions, see CMMV 23-31-12_D7320 (loudspeaker).

(f) Attach the light assembly 26N-130 to the lavatory structure.

NOTE: For further instructions, see CMMV 33-27-01_DD704 (light assembly).

(g) Attach the call light 26N-100 to the lavatory structure.

NOTE: For further instructions, see CMMV 33-22-01_DD704 (call light).

(h) Attach the brackets 26N-110 with the screws 26N-120 and the washers 26N-030 to the lavatory structure.

(i) Attach the smoke detector sealing 26N-050 and the smoke detector 26N-020 with the screws 26N-040 and the washers 26N-030 to the lavatory structure.

NOTE: For further instructions, see CMMV 26-16-16_F4885 (smoke detector).

(j) See Assembly of the Cable Harness Assembly for the assembly procedure of the cable harness assembly 26N-010.

(k) Connect the cables, the applicable bonding straps 26N-230, 26N-240, 26N-250, 26N-260, 26N-270 and the cable harness assembly 26N-010 to the electrical components.

(l) Install the ami cabin attendant seat cable 26N-350 as follows:

1 Attach the ami cabin attendant seat cable 26N-350, the connector backshell 26N-390 and the plug connectors 26N-380, 26N-400 to the lavatory structure.

(m) Attach the nut 26N-300 and the washer 26N-290 to the lavatory structure.

(n) Attach the clamp 26N-310 with the screw 26N-280 and the washer 26N-290 to the lavatory structure.

SUB TASK 25-41-51-440-021-B01
D2549010614400 D2549020510400 D2549020805400 D2549030404000 D2549030613600

2. Assembly of the Electrical System (26N-1)

(a) Attach the microswitch 26N-190 with the screws 26N-200.

(b) Attach the screws 26N-120, 26N-330, the washers 26N-030, 26N-320 and the nuts 26N-340 to the lavatory structure.

(c) Install and assemble the 2065VU switch panel 26N-470 as follows:

1 Attach the switch button switch 26N-560 to the printed circuit board PCB 26N-530.

2 Attach the protective lens 26N-570 to the switch button switch 26N-560.

3 Install and assemble the switch housing assembly 26N-480 as follows:
a Attach the switch housing 26N-490 with the screws 26N-540 and the spring washers 26N-550 to the printed circuit board PCB 26N-530.

4 Attach the plugs 26N-580 to the printed circuit board PCB 26N-530.

(d) Attach the mini inverter 26N-430 with the spacers 26N-440 and the screws 26N-450 to the lavatory structure.

NOTE: For further instructions, see CMMV 25-44-01_D2361 (mini inverter).

(e) Attach the loudspeaker 26N-180 to the lavatory structure.

NOTE: For further instructions, see CMMV 23-31-12_D7320 (loudspeaker).

(f) Attach the light assembly 26N-130 to the lavatory structure.

NOTE: For further instructions, see CMMV 33-27-01_DD704 (light assembly).

(g) Attach the call light 26N-100 to the lavatory structure.

NOTE: For further instructions, see CMMV 33-22-01_DD704 (call light).

(h) Attach the brackets 26N-110 with the screws 26N-120 and the washers 26N-030 to the lavatory structure.

(i) Attach the smoke detector sealing 26N-050 and the smoke detector 26N-020 with the screws 26N-040 and the washers 26N-030 to the lavatory structure.

NOTE: For further instructions, see CMMV 26-16-16_F4885 (smoke detector).

(j) See Assembly of the Cable Harness Assembly for the assembly procedure of the cable harness assembly 26N-010.

(k) Connect the cables, the applicable bonding straps 26N-230, 26N-240, 26N-250, 26N-260, 26N-270 and the cable harness assembly 26N-010 to the electrical components.

(l) Install the ami cabin attendant seat cable 26N-350 as follows:

1 Attach the ami cabin attendant seat cable 26N-350, the connector backshell 26N-390 and the plug connectors 26N-380, 26N-400 to the lavatory structure.

(m) Attach the bonding straps 26N-273 with the screws 26N-275 and the washers 26N-277 to the electrical components.

(n) Attach the nut 26N-300 and the washer 26N-290 to the lavatory structure.

(o) Attach the clamp 26N-310 with the screw 26N-280 and the washer 26N-290 to the lavatory structure.

TASK 25-41-51-400-802-Q01

D2549010400800 D2549010402600 D2549010402800 D2549010403000 D2549010614800
D2549020400000 D2549020400400 D2549020403800 D2549020404200 D2549020404400
D2549020404600 D2549020404800 D2549020405000 D2549020405200 D2549020405400
D2549020405600 D2549020405800 D2549020406200 D2549020513800 D2549020806000
D2549020810200 D2549020810800 D2549020811200 D2549020811800 D2549020812600
D2549020813800 D2549030401000 D2549030401600 D2549030402400 D2549030404400
D2549030404600 D2549030405600 D2549030407000 D2549030407400 D2549030407600
D2549030407800 D2549030408200 D2549030408400 D2549030408600 D2549030410400
R225401134-036 R225401196-008 R225401196-010 R225401196-012 R225401196-014
R225401196-016 R225401196-040 R225401196-054 R225401196-056 R225401196-058
R225401196-060 R225401196-062 R225401199-000 R225401199-010 R225401611-006
R225401611-012 R225401639-002 R225401643-002 R225401662-002

22. Assembly of the Electrical System

A. General

This task gives you the installation procedures of the component.

B. Job Set-up Information

(1) Not applicable

C. Procedure

WARNING: BE CAREFUL WHEN YOU USE SOLVENTS/CLEANING AGENTS, SEALANTS AND OTHER MATERIALS. OBEY THE MATERIAL MANUFACTURER'S INSTRUCTIONS AND THE LOCAL REGULATIONS. MAKE SURE THAT THERE IS A GOOD FLOW OF AIR THROUGH THE WORK AREA. DO NOT BREATHE THE FUMES. DO NOT SMOKE. DO NOT USE THESE MATERIALS NEAR A FLAME, SPARKS OR SOURCES OF HEAT. USE PROTECTIVE CLOTHING, GOGGLES AND GLOVES. IF YOU GET ONE OF THESE MATERIALS ON YOUR SKIN OR IN YOUR EYES, FLUSH IT AWAY WITH A FLOW OF CLEAN WATER. IF YOU GET ONE OF THESE MATERIALS IN YOUR MOUTH, GET IMMEDIATE MEDICAL AID. IN GENERAL, THESE MATERIALS ARE POISONOUS, FLAMMABLE AND SKIN IRRITANTS.

CAUTION: DO ALL THE WORK ON A CLEAN, SOFT SURFACE TO PREVENT DAMAGE TO THE COMPONENTS.

CAUTION: MAKE SURE THAT ALL THE PARTS ARE CLEAN BEFORE YOU ASSEMBLE THEM.

SUB TASK 25-41-51-440-022-A01

D2549010400800 D2549010402800 D2549010403000 D2549010614800 D2549020400000 D2549020400400 D2549020403800 D2549020404200 D2549020404600 D2549020405200 D2549020405400 D2549020405600 D2549020405800 D2549020406200 D2549020513800 D2549020806000 D2549020810200 D2549020810800 D2549020811800 D2549020812600 D2549020813800 D2549030401600 D2549030405600 D2549030407000 D2549030407400 D2549030407600 D2549030407800 R225401196-008 R225401196-010 R225401196-012 R225401196-014 R225401196-016 R225401196-040 R225401196-054 R225401196-056 R225401196-058 R225401196-060 R225401196-062 R225401199-000 R225401199-010 R225401611-006 R225401611-012 R225401639-002 R225401643-002

1. Assembly of the Electrical System (26P-1)

   (a) Attach the microswitch 26P-190 with the screws 26P-200.

   (b) Attach the mini inverter 26P-430 with the spacers 26P-440 and the screws 26P-450 to the lavatory structure.

   NOTE: For further instructions, see CMMV 25-44-01_D2361 (mini inverter).

   (c) Attach the loudspeaker 26P-180 to the lavatory structure.

   NOTE: For further instructions, see CMMV 23-31-12_D7320 (loudspeaker).

   (d) Attach the light assembly 26P-130 to the lavatory structure.

   NOTE: For further instructions, see CMMV 33-27-01_DD704 (light assembly).

   (e) Attach the call light 26P-100 to the lavatory structure.

   NOTE: For further instructions, see CMMV 33-22-01_DD704 (call light).

   (f) Attach the brackets 26P-110 with the screws 26P-120 and the washers 26P-030 to the lavatory structure.

   (g) Attach the smoke detector sealing 26P-050 and the smoke detector 26P-020 with the screws 26P-040 and the washers 26P-030 to the lavatory structure.

   NOTE: For further instructions, see CMMV 26-16-16_F4885 (smoke detector).

   (h) See Assembly of the Cable Harness Assembly for the assembly procedure of the cable harness assembly 26P-010.

(i) Connect the cables, the applicable bonding straps 26P-230, 26P-240, 26P-250, 26P-260, 26P-270, 26P-313 and the cable harness assembly 26P-010 to the electrical components.

(j) Attach the ami cabin attendant seat cable 26P-350, the connector backshell 26P-390 and the plug connectors 26P-380, 26P-400 to the lavatory structure.

(k) Attach the screws 26P-120, 26P-330, the washers 26P-030, 26P-320 and the nuts 26P-340 to the lavatory structure.

(l) Attach the nut 26P-300 and the washer 26P-290 to the lavatory structure.

(m) Attach the clamp 26P-310 with the screw 26P-280 and the washer 26P-290 to the lavatory structure.

SUB TASK 25-41-51-440-022-B01
D2549020811200 D2549030401000 D2549030402400 D2549030404400

2. Assembly of the Electrical System (26P-1)

(a) Attach the microswitch 26P-190 with the screws 26P-200.

(b) Attach the loudspeaker 26P-180 to the lavatory structure.

NOTE: For further instructions, see CMMV 23-31-12_D7320 (loudspeaker).

(c) Attach the light assembly 26P-130 to the lavatory structure.

NOTE: For further instructions, see CMMV 33-27-01_DD704 (light assembly).

(d) Attach the call light 26P-100 to the lavatory structure.

NOTE: For further instructions, see CMMV 33-22-01_DD704 (call light).

(e) Attach the brackets 26P-110 with the screws 26P-120 and the washers 26P-030 to the lavatory structure.

(f) Attach the smoke detector sealing 26P-050 and the smoke detector 26P-020 with the screws 26P-040 and the washers 26P-030 to the lavatory structure.

NOTE: For further instructions, see CMMV 26-16-16_F4885 (smoke detector).

(g) See Assembly of the Cable Harness Assembly for the assembly procedure of the cable harness assembly 26P-010.

(h) Connect the cables, the applicable bonding straps 26P-230, 26P-240, 26P-250, 26P-260, 26P-270, 26P-313 and the cable harness assembly 26P-010 to the electrical components.

(i) Attach the ami cabin attendant seat cable 26P-350, the connector backshell 26P-390 and the plug connectors 26P-380, 26P-400 to the lavatory structure.

(j) Attach the screws 26P-120, 26P-330, the washers 26P-030, 26P-320 and the nuts 26P-340 to the lavatory structure.

(k) Attach the nut 26P-300 and the washer 26P-290 to the lavatory structure.

(l) Attach the clamp 26P-310 with the screw 26P-280 and the washer 26P-290 to the lavatory structure.

SUB TASK 25-41-51-440-022-C01
D2549030404600 R225401134-036

3. Assembly of the Electrical System (26P-1)

(a) Attach the microswitch 26P-190 with the screws 26P-200.

(b) Attach the mini inverter 26P-430 with the spacers 26P-440 and the screws 26P-450 to the lavatory structure.

NOTE: For further instructions, see CMMV 25-44-01_D2361 (mini inverter).

(c) Attach the loudspeaker 26P-180 to the lavatory structure.

NOTE: For further instructions, see CMMV 23-31-12_D7320 (loudspeaker).

(d) Attach the light assembly 26P-130 to the lavatory structure.

NOTE: For further instructions, see CMMV 33-27-01_DD704 (light assembly).

(e) Attach the call light 26P-100 to the lavatory structure.

NOTE: For further instructions, see CMMV 33-20-01_DD704 (call light).

(f) Attach the brackets 26P-110 with the screws 26P-120 and the washers 26P-030 to the lavatory structure.

(g) Attach the smoke detector sealing 26P-050 and the smoke detector 26P-020 with the screws 26P-040 and the washers 26P-030 to the lavatory structure.

NOTE: For further instructions, see CMMV 26-16-16_F4885 (smoke detector).

(h) See Assembly of the Cable Harness Assembly for the assembly procedure of the cable harness assembly 26P-010.

(i) Connect the cables, the applicable bonding straps 26P-230, 26P-240, 26P-250, 26P-260, 26P-270, 26P-313 and the cable harness assembly 26P-010 to the electrical components.

(j) Attach the ami cabin attendant seat cable 26P-350, the connector backshell 26P-390 and the plug connectors 26P-380, 26P-400 to the lavatory structure.

(k) Attach the screws 26P-120, 26P-330, the washers 26P-030, 26P-320 and the nuts 26P-340 to the lavatory structure.

(l) Attach the nut 26P-300 and the washer 26P-290 to the lavatory structure.

(m) Attach the clamp 26P-310 with the screw 26P-280 and the washer 26P-290 to the lavatory structure.

SUB TASK 25-41-51-440-022-D01
D2549010402600 D2549020404800 D2549020405000 D2549030408200 D2549030408400 D2549030408600 D2549030410400 R225401662-002

4. Assembly of the Electrical System (26P-1)

(a) Attach the microswitch 26P-190 with the screws 26P-200.

(b) Install and assemble the 2065VU switch panel 26P-470 as follows:

1 Attach the switch button switch 26P-560 to the printed circuit board PCB 26P-530.

2 Attach the protective lens 26P-570 to the switch button switch 26P-560.

3 Install and assemble the switch housing assembly 26P-480 as follows:
a Attach the switch housing 26P-490 with the screws 26P-540 and the spring washers 26P-550 to the printed circuit board PCB 26P-530.

4 Attach the plugs 26P-580 to the printed circuit board PCB 26P-530.

(c) Attach the mini inverter 26P-430 with the spacers 26P-440 and the screws 26P-450 to the lavatory structure.

NOTE: For further instructions, see CMMV 25-44-01_D2361 (mini inverter).

(d) Attach the loudspeaker 26P-180 to the lavatory structure.

NOTE: For further instructions, see CMMV 23-31-12_D7320 (loudspeaker).

(e) Attach the light assembly 26P-130 to the lavatory structure.

NOTE: For further instructions, see CMMV 33-27-01_DD704 (light assembly).

(f) Attach the call light 26P-100 to the lavatory structure.

NOTE: For further instructions, see CMMV 33-22-01_DD704 (call light).

(g) Attach the brackets 26P-110 with the screws 26P-120 and the washers 26P-030 to the lavatory structure.

(h) Attach the smoke detector sealing 26P-050 and the smoke detector 26P-020 with the screws 26P-040 and the washers 26P-030 to the lavatory structure.

NOTE: For further instructions, see CMMV 26-16-16_F4885 (smoke detector).

(i) See Assembly of the Cable Harness Assembly for the assembly procedure of the cable harness assembly 26P-010.

(j) Connect the cables, the applicable bonding straps 26P-230, 26P-240, 26P-250, 26P-260, 26P-270, 26P-313, 26P-315 and the cable harness assembly 26P-010 to the electrical components.

(k) Attach the ami cabin attendant seat cable 26P-350, the connector backshell 26P-390 and the plug connectors 26P-380, 26P-400 to the lavatory structure.

(l) Attach the screws 26P-120, 26P-330, the washers 26P-030, 26P-320 and the nuts 26P-340 to the lavatory structure.

(m) Attach the nut 26P-300 and the washer 26P-290 to the lavatory structure.

(n) Attach the clamp 26P-310 with the screw 26P-280 and the washer 26P-290 to the lavatory structure.

SUB TASK 25-41-51-440-022-E01
D2549020404400

5. Assembly of the Electrical System (26P-1)

(a) Attach the microswitch 26P-190 with the screws 26P-200.

(b) Attach the mini inverter 26P-430 with the spacers 26P-440 and the screws 26P-450 to the lavatory structure.

NOTE: For further instructions, see CMMV 25-44-01_D2361 (mini inverter).

(c) Attach the loudspeaker 26P-180 to the lavatory structure.

NOTE: For further instructions, see CMMV 23-31-12_D7320 (loudspeaker).

(d) Attach the light assembly 26P-130 to the lavatory structure.

NOTE: For further instructions, see CMMV 33-27-01_DD704 (light assembly).

(e) Attach the call light 26P-100 to the lavatory structure.

NOTE: For further instructions, see CMMV 33-22-01_DD704 (call light).

(f) Attach the brackets 26P-110 with the screws 26P-120 and the washers 26P-030 to the lavatory structure.

(g) Attach the smoke detector sealing 26P-050 and the smoke detector 26P-020 with the screws 26P-040 and the washers 26P-030 to the lavatory structure.

NOTE: For further instructions, see CMMV 26-16-16_F4885 (smoke detector).

(h) See Assembly of the Cable Harness Assembly for the assembly procedure of the cable harness assembly 26P-010.

(i) Connect the cables, the applicable bonding straps 26P-230, 26P-240, 26P-250, 26P-260, 26P-270, 26P-313, 26P-315 and the cable harness assembly 26P-010 to the electrical components.

(j) Attach the ami cabin attendant seat cable 26P-350, the connector backshell 26P-390 and the plug connectors 26P-380, 26P-400 to the lavatory structure.

(k) Attach the screws 26P-120, 26P-330, the washers 26P-030, 26P-320 and the nuts 26P-340 to the lavatory structure.

(l) Attach the nut 26P-300 and the washer 26P-290 to the lavatory structure.

(m) Attach the clamp 26P-310 with the screw 26P-280 and the washer 26P-290 to the lavatory structure.

TASK 25-41-51-400-802-R01
D2549020507800 D2549020605800 D2549020708400 D2549020812800 D2549040500200 D2549040500400 D2549040500600 D2549040500800 D2549040501000 R225401673-000 R225401673-002 R225401673-004

23. Assembly of the Electrical System

A. General

This task gives you the installation procedures of the component.

B. Job Set-up Information

(1) Not applicable

C. Procedure

WARNING: BE CAREFUL WHEN YOU USE SOLVENTS/CLEANING AGENTS, SEALANTS AND OTHER MATERIALS. OBEY THE MATERIAL MANUFACTURER'S INSTRUCTIONS AND THE LOCAL REGULATIONS. MAKE SURE THAT THERE IS A GOOD FLOW OF AIR THROUGH THE WORK AREA. DO NOT BREATHE THE FUMES. DO NOT SMOKE. DO NOT USE THESE MATERIALS NEAR A FLAME, SPARKS OR SOURCES OF HEAT. USE PROTECTIVE CLOTHING, GOGGLES AND GLOVES. IF YOU GET ONE OF THESE MATERIALS ON YOUR SKIN OR IN YOUR EYES, FLUSH IT AWAY WITH A FLOW OF CLEAN WATER. IF YOU GET ONE OF THESE MATERIALS IN YOUR MOUTH, GET IMMEDIATE MEDICAL AID. IN GENERAL, THESE MATERIALS ARE POISONOUS, FLAMMABLE AND SKIN IRRITANTS.

CAUTION: DO ALL THE WORK ON A CLEAN, SOFT SURFACE TO PREVENT DAMAGE TO THE COMPONENTS.

CAUTION: MAKE SURE THAT ALL THE PARTS ARE CLEAN BEFORE YOU ASSEMBLE THEM.

SUB TASK 25-41-51-440-023-A01
D2549040500200 D2549040500400 D2549040500600 D2549040500800 D2549040501000 R225401673-000 R225401673-002 R225401673-004

1. Assembly of the Electrical System (26Q-1)

(a) Attach the microswitch 26Q-250 with the screws 26Q-260.

(b) Attach the mini inverter 26Q-360 with the spacers 26Q-370 and the screws 26Q-380 to the lavatory structure.

NOTE: For further instructions, see CMMV 25-44-01_D2361 (mini inverter).

(c) Attach the loudspeaker 26Q-240 to the lavatory structure.

NOTE: For further instructions, see CMMV 23-31-12_D7320 (loudspeaker).

(d) Attach the screws 26Q-130 and the washers 26Q-140 to the lavatory structure.

(e) Attach the light assembly 26Q-150 to the lavatory structure.

NOTE: For further instructions, see CMMV 33-27-01_DD704 (light assembly).

(f) Attach the call light 26Q-110 to the lavatory structure.

NOTE: For further instructions, see CMMV 33-22-01_DD704 (call light).

(g) Attach the bracket 26Q-120 with the screws 26Q-130 and the washers 26Q-140 to the lavatory structure.

(h) Attach the smoke detector sealing 26Q-030 and the smoke detector 26Q-020 with the screws 26Q-040 and the nuts 26Q-050 to the lavatory structure.

NOTE: For further instructions, see CMMV 26-18-18_F4885 (smoke detector).

(i) See Assembly of the Cable Harness Assembly for the assembly procedure of the cable harness assembly 26Q-010.

(j) Connect the cables, the applicable bonding straps 26Q-270, 26Q-280, 26Q-290, 26Q-300, 26Q-310 and the cable harness assembly 26Q-010 to the electrical components.

(k) Attach the brackets 26Q-210 with the screws 26Q-130 and the washers 26Q-140 to the lavatory structure.

(l) Attach the ami cabin attendant seat cable 26Q-390, the connector backshell 26Q-430 and the plug connectors 26Q-420, 26Q-440 to the lavatory structure.

(m) Attach the screws 26Q-130 and the washers 26Q-140 to the lavatory structure.

(n) Attach the nut 26Q-340 and the washer 26Q-330 to the lavatory structure.

(o) Attach the clamp 26Q-350 with the screw 26Q-320 and the washer 26Q-330 to the lavatory structure.

SUB TASK 25-41-51-440-023-B01
D2549020507800 D2549020605800 D2549020708400 D2549020812800

2. Assembly of the Electrical System (26Q-1)

(a) Attach the microswitch 26Q-250 with the screws 26Q-260.

(b) Attach the mini inverter 26Q-360 with the spacers 26Q-370 and the screws 26Q-380 to the lavatory structure.

NOTE: For further instructions, see CMMV 25-44-01_D2361 (mini inverter).

(c) Attach the loudspeaker 26Q-240 to the lavatory structure.

NOTE: For further instructions, see CMMV 23-31-12_D7320 (loudspeaker).

(d) Attach the screws 26Q-130 and the washers 26Q-140 to the lavatory structure.

(e) Attach the light assembly 26Q-150 to the lavatory structure.

NOTE: For further instructions, see CMMV 33-27-01_DD704 (light assembly).

(f) Attach the call light 26Q-110 to the lavatory structure.

NOTE: For further instructions, see CMMV 33-22-01_DD704 (call light).

(g) Attach the bracket 26Q-120 with the screws 26Q-130 and the washers 26Q-140 to the lavatory structure.

(h) Attach the smoke detector sealing 26Q-030 and the smoke detector 26Q-020 with the screws 26Q-040, the washers 26Q-145 and the nuts 26Q-050 to the lavatory structure.

NOTE: For further instructions, see CMMV 26-18-18_F4885 (smoke detector).

(i) See Assembly of the Cable Harness Assembly for the assembly procedure of the cable harness assembly 26Q-010.

(j) Connect the cables, the applicable bonding straps 26Q-270, 26Q-280, 26Q-290, 26Q-300, 26Q-310 and the cable harness assembly 26Q-010 to the electrical components.

(k) Attach the brackets 26Q-210 with the screws 26Q-130 and the washers 26Q-140 to the lavatory structure.

(l) Attach the ami cabin attendant seat cable 26Q-390, the connector backshell 26Q-430 and the plug connectors 26Q-420, 26Q-440 to the lavatory structure.

(m) Attach the screws 26Q-130 and the washers 26Q-140 to the lavatory structure.

(n) Attach the nut 26Q-340 and the washer 26Q-330 to the lavatory structure.

(o) Attach the clamp 26Q-350 with the screw 26Q-320 and the washer 26Q-330 to the lavatory structure.

TASK 25-41-51-400-802-S01

D2547160900200 D2547160900400 D2549010401000 D2549010401400 D2549010401600
D2549010401800 D2549010402200 D2549010402400 D2549010403200 D2549010403400
D2549010403600 D2549010403800 D2549010404000 D2549010404200 D2549010404400
D2549010404600 D2549010404800 D2549010405000 D2549010405400 D2549010405800
D2549010406000 D2549010406200 D2549010406400 D2549010406800 D2549010407000
D2549010510600 D2549010610600 D2549010613600 D2549020300000 D2549020300400
D2549020300600 D2549020300800 D2549020301000 D2549020301800 D2549020302000
D2549020302800 D2549020400600 D2549020400800 D2549020401000 D2549020401200
D2549020401400 D2549020401600 D2549020402000 D2549020402200 D2549020402400
D2549020402600 D2549020403000 D2549020403200 D2549020403400 D2549020403600
D2549020404000 D2549020406000 D2549020406400 D2549020406600 D2549020406800
D2549020407000 D2549020407200 D2549020407400 D2549020407600 D2549020407800
D2549020408000 D2549020408200 D2549020408600 D2549020408800 D2549020409000
D2549020409200 D2549020409400 D2549020409600 D2549020409800 D2549020410200
D2549020410400 D2549020410600 D2549020410800 D2549020411000 D2549020411400
D2549020411600 D2549020411800 D2549020412600 D2549020412800 D2549020413000
D2549020413400 D2549020414200 D2549020700200 D2549020804400 D2549020807200
D2549020809600 D2549030409000 D2549030409200 D2549030409400 D2549030410000
D2549030410200 D2549030410600 D2549030411200 D2549030411400 D2549030411600
D2549030411800 D2549030412000 D2549030412200 D2549030412400 D2549030412600
D2549030412800 D2549030413200 D2549030413400 D2549030413600 D2549030414400
D2549030414800 D2549030700200 D2549030700400 D2549030701000 D2549030702600
D2549030703400 D2549030703600 D2549030704200 D2549030704400 D2549030705200
R225401134-014 R225401134-038 R225401136-006 R225401136-012 R225401136-024
R225401152-010 R225401183-004 R225401183-006 R225401196-018 R225401196-020
R225401196-022 R225401196-024 R225401196-042 R225401196-064 R225401196-066
R225401196-068 R225401196-070 R225401199-012 R225401602-000 R225401611-000
R225401611-014 R225401611-016 R225401611-018 R225401624-000 R225401627-000
R225401627-002 R225401627-004 R225401643-006 R225401643-008 R225401646-002
R225401648-004 R225401648-006 R225401648-008 R225401649-000 R225401675-000
R225401676-000 R225401683-000 R225401685-000 R225401685-002 R225401688-000
R225401689-004 R225401689-006 R225401811-000

24. Assembly of the Electrical System

A. General

This task gives you the installation procedures of the component.

B. Job Set-up Information

(1) Not applicable

C. Procedure

WARNING: **BE CAREFUL WHEN YOU USE SOLVENTS/CLEANING AGENTS, SEALANTS AND OTHER MATERIALS. OBEY THE MATERIAL MANUFACTURER'S INSTRUCTIONS AND THE LOCAL REGULATIONS. MAKE SURE THAT THERE IS A GOOD FLOW OF AIR THROUGH THE WORK AREA. DO NOT BREATHE THE FUMES. DO NOT SMOKE. DO NOT USE THESE MATERIALS NEAR A FLAME, SPARKS OR SOURCES OF HEAT. USE PROTECTIVE CLOTHING, GOGGLES AND GLOVES. IF YOU GET ONE OF THESE MATERIALS ON YOUR SKIN OR IN YOUR EYES, FLUSH IT AWAY WITH A FLOW OF CLEAN WATER. IF YOU GET ONE OF THESE MATERIALS IN YOUR MOUTH, GET IMMEDIATE MEDICAL AID. IN GENERAL, THESE MATERIALS ARE POISONOUS, FLAMMABLE AND SKIN IRRITANTS.**

CAUTION: **DO ALL THE WORK ON A CLEAN, SOFT SURFACE TO PREVENT DAMAGE TO THE COMPONENTS.**

CAUTION: **MAKE SURE THAT ALL THE PARTS ARE CLEAN BEFORE YOU ASSEMBLE THEM.**

SUB TASK 25-41-51-440-024-A01

D2547160900200 D2547160900400 D2549010401000 D2549010401400 D2549010401800 D2549010403600 D2549010404200 D2549010404400 D2549010405400 D2549010406000 D2549010406200 D2549010406800 D2549020300000 D2549020300400 D2549020300800 D2549020301000 D2549020302000 D2549020302800 D2549020400600 D2549020401400 D2549020402000 D2549020402400 D2549020402600 D2549020403200 D2549020403400 D2549020403600 D2549020404000 D2549020406000 D2549020406400 D2549020406600 D2549020406800 D2549020407000 D2549020407400 D2549020407600 D2549020407800 D2549020408000 D2549020408600 D2549020408800 D2549020409000 D2549020409200 D2549020409400 D2549020409600 D2549020410400 D2549020411000 D2549020411400 D2549020411600 D2549020412600 D2549020413000 D2549020804400 D2549020807200 D2549020809600 D2549030409200 D2549030410000 D2549030410200 D2549030410600 D2549030411200 D2549030411400 D2549030411600 D2549030411800 D2549030412400 D2549030412600 D2549030413200 D2549030413600 D2549030414400 D2549030414800 D2549030700400 D2549030701000 D2549030703400 D2549030703600 R225401136-006 R225401136-012 R225401136-024 R225401152-010 R225401196-018 R225401196-020 R225401196-022 R225401196-024 R225401196-042 R225401196-064 R225401196-066 R225401196-068 R225401196-070 R225401199-012 R225401602-000 R225401611-000 R225401611-014 R225401611-016 R225401611-018 R225401627-000 R225401627-002 R225401627-004 R225401643-006 R225401643-008 R225401646-002 R225401648-004 R225401648-006 R225401648-008 R225401649-000 R225401675-000 R225401683-000 R225401688-000

1. Assembly of the Electrical System (26R-1)

(a) Attach the microswitch 26R-230 with the screws 26R-240.

(b) Attach the mini inverter 26R-450 with the spacers 26R-470 and the screws 26R-460 to the lavatory structure.

NOTE: For further instructions, see CMMV 25-44-01_D2361 (mini inverter).

(c) Attach the loudspeaker 26R-220 to the lavatory structure.

NOTE: For further instructions, see CMMV 23-31-12_D7320 (loudspeaker).

(d) Attach the light assembly 26R-140 to the lavatory structure.

NOTE: For further instructions, see CMMV 33-27-01_DD704 (light assembly).

(e) Attach the call light 26R-100 to the lavatory structure.

NOTE: For further instructions, see CMMV 33-22-01_DD704 (call light).

(f) Attach the brackets 26R-110 with the screws 26R-120 and the washers 26R-130 to the lavatory structure.

(g) Attach the smoke detector sealing 26R-030 and the smoke detector 26R-020 with the screws 26R-040 and the nuts 26R-050 to the lavatory structure.

NOTE: For further instructions, see CMMV 26-16-16_F4885 (smoke detector).

(h) See Assembly of the Cable Harness Assembly for the assembly procedure of the cable harness assembly 26R-010.

(i) Connect the cables, the applicable bonding straps 26R-250, 26R-260, 26R-270, 26R-280, 26R-290 and the cable harness assembly 26R-010 to the electrical components.

(j) Attach the ami cabin attendant seat cable 26R-350, the connector backshell 26R-390 and the plug connectors 26R-380, 26R-400 to the lavatory structure.

(k) Attach the cable ties 26R-190 with the screws 26R-120, 26R-340 and the washers 26R-130 to the lavatory structure.

(l) Attach the nut 26R-320 and the washer 26R-310 to the lavatory structure.

(m) Attach the clamp 26R-330 with the screw 26R-300 and the washer 26R-310 to the lavatory structure.

SUB TASK 25-41-51-440-024-B01
D2549010402200 D2549010403800 D2549010405000 D2549010405800 D2549010407000 D2549020400800 D2549020401600 D2549020408200 D2549020410200 D2549020410800 D2549020411800 D2549020414200 D2549030409400 D2549030412800 D2549030705200 R225401624-000 R225401676-000 R225401689-004 R225401689-006

2. Assembly of the Electrical System (26R-1)

(a) Attach the microswitch 26R-230 with the screws 26R-240.

(b) Install and assemble the 2065VU switch panel 26R-480 as follows:

1 Attach the switch button switch 26R-570 to the printed circuit board PCB 26R-540.

2 Attach the protective lens 26R-580 to the switch button switch 26R-570.

3 Install and assemble the switch housing assembly 26R-490 as follows:
a Attach the switch housing 26R-500 with the screws 26R-550 and the spring washers 26R-560 to the printed circuit board PCB 26R-540.

4 Attach the plugs 26R-590 to the printed circuit board PCB 26R-540.

(c) Attach the mini inverter 26R-450 with the spacers 26R-470 and the screws 26R-460 to the lavatory structure.

NOTE: For further instructions, see CMMV 25-44-01_D2361 (mini inverter).

(d) Attach the loudspeaker 26R-220 to the lavatory structure.

NOTE: For further instructions, see CMMV 23-31-12_D7320 (loudspeaker).

(e) Attach the light assembly 26R-140 to the lavatory structure.

NOTE: For further instructions, see CMMV 33-27-01_DD704 (light assembly).

(f) Attach the call light 26R-100 to the lavatory structure.

NOTE: For further instructions, see CMMV 33-22-01_DD704 (call light).

(g) Attach the brackets 26R-110 with the screws 26R-120 and the washers 26R-130 to the lavatory structure.

(h) Attach the smoke detector sealing 26R-030 and the smoke detector 26R-020 with the screws 26R-040 and the nuts 26R-050 to the lavatory structure.

NOTE: For further instructions, see CMMV 26-16-16_F4885 (smoke detector).

(i) See Assembly of the Cable Harness Assembly and Assembly of the Cable Harness Assembly for the assembly procedure of the cable harness assembly 26R-010.

(j) Connect the cables, the applicable bonding straps 26R-250, 26R-260, 26R-270, 26R-280, 26R-290 and the cable harness assembly 26R-010 to the electrical components.

(k) Attach the ami cabin attendant seat cable 26R-350, the connector backshell 26R-390 and the plug connectors 26R-380, 26R-400 to the lavatory structure.

(l) Attach the cable ties 26R-190 with the screws 26R-120, 26R-340 and the washers 26R-130 to the lavatory structure.

(m) Attach the nut 26R-320 and the washer 26R-310 to the lavatory structure.

(n) Attach the clamp 26R-330 with the screw 26R-300 and the washer 26R-310 to the lavatory structure.

SUB TASK 25-41-51-440-024-C01
D2549020401200 D2549020413400 D2549030700200 D2549030702600

3. Assembly of the Electrical System (26R-1)

(a) Attach the microswitch 26R-230 with the screws 26R-240.

(b) Attach the loudspeaker 26R-220 to the lavatory structure.

NOTE: For further instructions, see CMMV 23-31-12_D7320 (loudspeaker).

(c) Attach the light assembly 26R-140 to the lavatory structure.

NOTE: For further instructions, see CMMV 33-27-01_DD704 (light assembly).

(d) Attach the call light 26R-100 to the lavatory structure.

NOTE: For further instructions, see CMMV 33-22-01_DD704 (call light).

(e) Attach the brackets 26R-110 with the screws 26R-120 and the washers 26R-130 to the lavatory structure.

(f) Attach the smoke detector sealing 26R-030 and the smoke detector 26R-020 with the screws 26R-040 and the nuts 26R-050 to the lavatory structure.

NOTE: For further instructions, see CMMV 26-16-16_F4885 (smoke detector).

(g) See Assembly of the Cable Harness Assembly for the assembly procedure of the cable harness assembly 26R-010.

(h) Connect the cables, the applicable bonding straps 26R-250, 26R-260, 26R-270, 26R-280, 26R-290 and the cable harness assembly 26R-010 to the electrical components.

(i) Attach the ami cabin attendant seat cable 26R-350, the connector backshell 26R-390 and the plug connectors 26R-380, 26R-400 to the lavatory structure.

(j) Attach the cable ties 26R-190 with the screws 26R-120, 26R-340 and the washers 26R-130 to the lavatory structure.

(k) Attach the nut 26R-320 and the washer 26R-310 to the lavatory structure.

(l) Attach the clamp 26R-330 with the screw 26R-300 and the washer 26R-310 to the lavatory structure.

SUB TASK 25-41-51-440-024-D01
D2549010404000 D2549020402200 D2549020407200 D2549030412000

4. Assembly of the Electrical System (26R-1)

(a) Attach the microswitch 26R-230 with the screws 26R-240.

(b) Install and assemble the 2065VU switch panel 26R-480 as follows:

1 Attach the switch button switch 26R-570 to the printed circuit board PCB 26R-540.

2 Attach the protective lens 26R-580 to the switch button switch 26R-570.

3 Install and assemble the switch housing assembly 26R-490 as follows:

a Attach the switch housing 26R-500 with the screws 26R-550 and the spring washers 26R-560 to the printed circuit board PCB 26R-540.

4 Attach the plugs 26R-590 to the printed circuit board PCB 26R-540.

(c) Attach the mini inverter 26R-450 with the spacers 26R-470 and the screws 26R-460 to the lavatory structure.

NOTE: For further instructions, see CMMV 25-44-01_D2361 (mini inverter).

(d) Attach the loudspeaker 26R-220 to the lavatory structure.

NOTE: For further instructions, see CMMV 23-31-12_D7320 (loudspeaker).

(e) Attach the light assembly 26R-140 to the lavatory structure.

NOTE: For further instructions, see CMMV 33-27-01_DD704 (light assembly).

(f) Attach the call light 26R-100 to the lavatory structure.

NOTE: For further instructions, see CMMV 33-22-01_DD704 (call light).

(g) Attach the brackets 26R-110 with the screws 26R-120 and the washers 26R-130 to the lavatory structure.

(h) Attach the smoke detector sealing 26R-030 and the smoke detector 26R-020 with the screws 26R-040 and the nuts 26R-050 to the lavatory structure.

NOTE: For further instructions, see CMMV 26-16-16_F4885 (smoke detector).

(i) See Assembly of the Cable Harness Assembly for the assembly procedure of the cable harness assembly 26R-010.

(j) Connect the cables, the applicable bonding straps 26R-250, 26R-260, 26R-270, 26R-280, 26R-290 and the cable harness assembly 26R-010 to the electrical components.

(k) Attach the ami cabin attendant seat cable 26R-350, the connector backshell 26R-390 and the plug connectors 26R-380, 26R-400 to the lavatory structure.

(l) Attach the bonding strap 26R-295 with the screws 26R-325 and the washers 26R-335 to the electrical components.

(m) Attach the cable ties 26R-190 with the screws 26R-120, 26R-340 and the washers 26R-130 to the lavatory structure.

(n) Attach the nut 26R-320 and the washer 26R-310 to the lavatory structure.

(o) Attach the clamp 26R-330 with the screw 26R-300 and the washer 26R-310 to the lavatory structure.

SUB TASK 25-41-51-440-024-E01
D2549010403200 D2549010404600 D2549010404800 D2549010610600 D2549020412800 R225401183-004 R225401183-006 R225401685-000 R225401685-002 R225401811-000

5. Assembly of the Electrical System (26R-1)

(a) Attach the microswitch 26R-230 with the screws 26R-240.

(b) Attach the mini inverter 26R-450 with the spacers 26R-470 and the screws 26R-460 to the lavatory structure.

NOTE: For further instructions, see CMMV 25-44-01_D2361 (mini inverter).

(c) Attach the loudspeaker 26R-220 to the lavatory structure.

NOTE: For further instructions, see CMMV 23-31-12_D7320 (loudspeaker).

(d) Attach the light assembly 26R-140 to the lavatory structure.

NOTE: For further instructions, see CMMV 33-27-01_DD704 (light assembly).

(e) Attach the call light 26R-100 to the lavatory structure.

NOTE: For further instructions, see CMMV 33-22-01_DD704 (call light).

(f) Attach the brackets 26R-110 with the screws 26R-120 and the washers 26R-130 to the lavatory structure.

(g) Attach the smoke detector sealing 26R-030 and the smoke detector 26R-020 with the screws 26R-040 and the nuts 26R-050 to the lavatory structure.

NOTE: For further instructions, see CMMV 26-16-16_F4885 (smoke detector).

(h) See Assembly of the Cable Harness Assembly for the assembly procedure of the cable harness assembly 26R-010.

(i) Connect the cables, the applicable bonding straps 26R-250, 26R-260, 26R-270, 26R-280, 26R-290 and the cable harness assembly 26R-010 to the electrical components.

(j) Attach the ami cabin attendant seat cable 26R-350, the connector backshell 26R-390 and the plug connectors 26R-380, 26R-400 to the lavatory structure.

(k) Attach the bonding strap 26R-295 with the screws 26R-325 and the washers 26R-335 to the electrical components.

(l) Attach the cable ties 26R-190 with the screws 26R-120, 26R-340 and the washers 26R-130 to the lavatory structure.

(m) Attach the nut 26R-320 and the washer 26R-310 to the lavatory structure.

(n) Attach the clamp 26R-330 with the screw 26R-300 and the washer 26R-310 to the lavatory structure.

SUB TASK 25-41-51-440-024-F01
D2549020403000 D2549030409000 R225401134-014 R225401134-038

6. Assembly of the Electrical System (26R-1)

(a) Attach the microswitch 26R-230 with the screws 26R-240.

(b) Attach the mini inverter 26R-450 with the spacers 26R-470 and the screws 26R-460 to the lavatory structure.

NOTE: For further instructions, see CMMV 25-44-01_D2361 (mini inverter).

(c) Attach the loudspeaker 26R-220 to the lavatory structure.

NOTE: For further instructions, see CMMV 23-31-12_D7320 (loudspeaker).

(d) Attach the light assembly 26R-140 to the lavatory structure.

NOTE: For further instructions, see CMMV 33-27-01_DD704 (light assembly).

(e) Attach the call light 26R-100 to the lavatory structure.

NOTE: For further instructions, see CMMV 33-20-01_DD704 (call light).

(f) Attach the brackets 26R-110 with the screws 26R-120 and the washers 26R-130 to the lavatory structure.

(g) Attach the smoke detector sealing 26R-030 and the smoke detector 26R-020 with the screws 26R-040 and the nuts 26R-050 to the lavatory structure.

NOTE: For further instructions, see CMMV 26-16-16_F4885 (smoke detector).

(h) See Assembly of the Cable Harness Assembly for the assembly procedure of the cable harness assembly 26R-010.

(i) Connect the cables, the applicable bonding straps 26R-250, 26R-260, 26R-270, 26R-280, 26R-290 and the cable harness assembly 26R-010 to the electrical components.

(j) Attach the ami cabin attendant seat cable 26R-350, the connector backshell 26R-390 and the plug connectors 26R-380, 26R-400 to the lavatory structure.

(k) Attach the cable ties 26R-190 with the screws 26R-120, 26R-340 and the washers 26R-130 to the lavatory structure.

(l) Attach the nut 26R-320 and the washer 26R-310 to the lavatory structure.

(m) Attach the clamp 26R-330 with the screw 26R-300 and the washer 26R-310 to the lavatory structure.

SUB TASK 25-41-51-440-024-H01
D2549030412200 D2549030704200

7. Assembly of the Electrical System (26R-1)

(a) Attach the microswitch 26R-230 with the screws 26R-240.

(b) Install and assemble the 2065VU switch panel 26R-480 as follows:

1 Attach the switch button switch 26R-570 to the printed circuit board PCB 26R-540.

2 Attach the protective lens 26R-580 to the switch button switch 26R-570.

3 Install and assemble the switch housing assembly 26R-490 as follows:
a Attach the switch housing 26R-500 with the screws 26R-550 and the spring washers 26R-560 to the printed circuit board PCB 26R-540.

4 Attach the plugs 26R-590 to the printed circuit board PCB 26R-540.

(c) Attach the mini inverter 26R-450 with the spacers 26R-470 and the screws 26R-460 to the lavatory structure.

NOTE: For further instructions, see CMMV 25-44-01_D2361 (mini inverter).

(d) Attach the loudspeaker 26R-220 to the lavatory structure.

NOTE: For further instructions, see CMMV 23-31-12_D7320 (loudspeaker).

(e) Attach the light assembly 26R-140 to the lavatory structure.

NOTE: For further instructions, see CMMV 33-27-01_DD704 (light assembly).

(f) Attach the call light 26R-100 to the lavatory structure.

NOTE: For further instructions, see CMMV 33-22-01_DD704 (call light).

(g) Attach the brackets 26R-110 with the screws 26R-120 and the washers 26R-130 to the lavatory structure.

(h) Attach the smoke detector sealing 26R-030 and the smoke detector 26R-020 with the screws 26R-040 and the nuts 26R-050 to the lavatory structure.

NOTE: For further instructions, see CMMV 26-16-16_F4885 (smoke detector).

(i) See Assembly of the Cable Harness Assembly for the assembly procedure of the cable harness assembly 26R-010.

(j) Connect the cables, the applicable bonding straps 26R-250, 26R-260, 26R-270, 26R-280, 26R-290, 26R-295 and the cable harness assembly 26R-010 to the electrical components.

(k) Attach the ami cabin attendant seat cable 26R-350, the connector backshell 26R-390 and the plug connectors 26R-380, 26R-400 to the lavatory structure.

(l) Attach the cable ties 26R-190 with the screws 26R-120, 26R-340 and the washers 26R-130 to the lavatory structure.

(m) Attach the nut 26R-320 and the washer 26R-310 to the lavatory structure.

(n) Attach the clamp 26R-330 with the screw 26R-300 and the washer 26R-310 to the lavatory structure.

SUB TASK 25-41-51-440-024-J01
D2549010401600 D2549020700200

8. Assembly of the Electrical System (26R-1)

(a) Attach the microswitch 26R-230 with the screws 26R-240, 26R-307 and the washer 26R-315.

(b) Attach the loudspeaker 26R-220 to the lavatory structure.

NOTE: For further instructions, see CMMV 23-31-12_D7320 (loudspeaker).

(c) Attach the light assembly 26R-140 to the lavatory structure.

NOTE: For further instructions, see CMMV 33-27-01_DD704 (light assembly).

(d) Attach the call light 26R-100 to the lavatory structure.

NOTE: For further instructions, see CMMV 33-22-01_DD704 (call light).

(e) Attach the brackets 26R-110 with the screws 26R-120 and the washers 26R-130 to the lavatory structure.

(f) Attach the smoke detector sealing 26R-030 and the smoke detector 26R-020 with the screws 26R-040 and the nuts 26R-050 to the lavatory structure.

NOTE: For further instructions, see CMMV 26-16-16_F4885 (smoke detector).

(g) See Assembly of the Cable Harness Assembly for the assembly procedure of the cable harness assembly 26R-010.

(h) Connect the cables, the applicable bonding straps 26R-250, 26R-260, 26R-270, 26R-280, 26R-290, 26R-295 and the cable harness assembly 26R-010 to the electrical components.

(i) Attach the ami cabin attendant seat cable 26R-350, the connector backshell 26R-390 and the plug connectors 26R-380, 26R-400 to the lavatory structure.

(j) Attach the cable ties 26R-190 with the screws 26R-120, 26R-340 and the washers 26R-130 to the lavatory structure.

(k) Attach the nut 26R-320 and the washer 26R-310 to the lavatory structure.

(l) Attach the clamp 26R-330 with the screw 26R-300 and the washer 26R-310 to the lavatory structure.

SUB TASK 25-41-51-440-024-K01
D2549010402400 D2549010403400 D2549010406400

9. Assembly of the Electrical System (26R-1)

(a) Attach the microswitch 26R-230 with the screws 26R-240.

(b) Attach the mini inverter 26R-450 with the spacers 26R-470 and the screws 26R-460 to the lavatory structure.

NOTE: For further instructions, see CMMV 25-44-01_D2361 (mini inverter).

(c) Attach the loudspeaker 26R-220 to the lavatory structure.

NOTE: For further instructions, see CMMV 23-31-12_D7320 (loudspeaker).

(d) Attach the light assembly 26R-140 to the lavatory structure.

NOTE: For further instructions, see CMMV 33-27-01_DD704 (light assembly).

(e) Attach the call light 26R-100 to the lavatory structure.

NOTE: For further instructions, see CMMV 33-22-01_DD704 (call light).

(f) Attach the brackets 26R-111, 26R-115 with the screws 26R-120 and the washers 26R-130 to the lavatory structure.

(g) Attach the smoke detector sealing 26R-030 and the smoke detector 26R-020 with the screws 26R-040 and the nuts 26R-050 to the lavatory structure.

NOTE: For further instructions, see CMMV 26-16-16_F4885 (smoke detector).

(h) See Assembly of the Cable Harness Assembly for the assembly procedure of the cable harness assembly 26R-010.

(i) Connect the cables, the applicable bonding straps 26R-250, 26R-260, 26R-270, 26R-280, 26R-290 and the cable harness assembly 26R-010 to the electrical components.

(j) Attach the ami cabin attendant seat cable 26R-350, the connector backshell 26R-390 and the plug connectors 26R-380, 26R-400 to the lavatory structure.

(k) Attach the cable ties 26R-190 with the screws 26R-120, 26R-340 and the washers 26R-130 to the lavatory structure.

(l) Attach the nut 26R-320 and the washer 26R-310 to the lavatory structure.

(m) Attach the clamp 26R-330 with the screw 26R-300 and the washer 26R-310 to the lavatory structure.

SUB TASK 25-41-51-440-024-L01
D2549010613600 D2549020300600 D2549020301800 D2549020401000 D2549020409800 D2549020410600

10. Assembly of the Electrical System (26R-1)

(a) Attach the microswitch 26R-230 with the screws 26R-240.

(b) Attach the mini inverter 26R-450 with the spacers 26R-470 and the screws 26R-460 to the lavatory structure.

NOTE: For further instructions, see CMMV 25-44-01_D2361 (mini inverter).

(c) Attach the loudspeaker 26R-220 to the lavatory structure.

NOTE: For further instructions, see CMMV 23-31-12_D7320 (loudspeaker).

(d) Attach the light assembly 26R-140 to the lavatory structure.

NOTE: For further instructions, see CMMV 33-27-01_DD704 (light assembly).

(e) Attach the call light 26R-100 to the lavatory structure.

NOTE: For further instructions, see CMMV 33-22-01_DD704 (call light).

(f) Attach the brackets 26R-110 with the screws 26R-120 and the washers 26R-130 to the lavatory structure.

(g) Attach the smoke detector sealing 26R-030 and the smoke detector 26R-020 with the screws 26R-040 and the nuts 26R-050 to the lavatory structure.

NOTE: For further instructions, see CMMV 26-16-16_F4885 (smoke detector).

(h) See Assembly of the Cable Harness Assembly for the assembly procedure of the cable harness assembly 26R-010.

(i) Connect the cables, the applicable bonding straps 26R-250, 26R-260, 26R-270, 26R-280, 26R-290, 26R-295 and the cable harness assembly 26R-010 to the electrical components.

(j) Attach the ami cabin attendant seat cable 26R-350, the connector backshell 26R-390 and the plug connectors 26R-380, 26R-400 to the lavatory structure.

(k) Attach the cable ties 26R-190 with the screws 26R-120, 26R-340 and the washers 26R-130 to the lavatory structure.

(l) Attach the nut 26R-320 and the washer 26R-310 to the lavatory structure.

(m) Attach the clamp 26R-330 with the screw 26R-300 and the washer 26R-310 to the lavatory structure.

SUB TASK 25-41-51-440-024-M01
D2549010510600 D2549030413400 D2549030704400

11. Assembly of the Electrical System (26R-1)

(a) Attach the microswitch 26R-230 with the screws 26R-240.

(b) Install and assemble the 2065VU switch panel 26R-480 as follows:

1 Attach the switch button switch 26R-570 to the printed circuit board PCB 26R-540.

2 Attach the protective lens 26R-580 to the switch button switch 26R-570.

3 Install and assemble the switch housing assembly 26R-490 as follows:
a Attach the switch housing 26R-500 with the screws 26R-550 and the spring washers 26R-560 to the printed circuit board PCB 26R-540.

4 Attach the plugs 26R-590 to the printed circuit board PCB 26R-540.

(c) Attach the mini inverter 26R-450 with the spacers 26R-470 and the screws 26R-460 to the lavatory structure.

NOTE: For further instructions, see CMMV 25-44-01_D2361 (mini inverter).

(d) Attach the loudspeaker 26R-220 to the lavatory structure.

NOTE: For further instructions, see CMMV 23-31-12_D7320 (loudspeaker).

(e) Attach the light assembly 26R-140 to the lavatory structure.

NOTE: For further instructions, see CMMV 33-27-01_DD704 (light assembly).

(f) Attach the call light 26R-100 to the lavatory structure.

NOTE: For further instructions, see CMMV 33-22-01_DD704 (call light).

(g) Attach the brackets 26R-110 with the screws 26R-120 and the washers 26R-130 to the lavatory structure.

(h) Attach the smoke detector sealing 26R-030 and the smoke detector 26R-020 with the screws 26R-040 and the nuts 26R-050 to the lavatory structure.

NOTE: For further instructions, see CMMV 26-16-16_F4885 (smoke detector).

(i) See Assembly of the Cable Harness Assembly for the assembly procedure of the cable harness assembly 26R-010.

(j) Connect the cables, the applicable bonding straps 26R-250, 26R-255, 26R-265, 26R-280, 26R-285, 26R-290 and the cable harness assembly 26R-010 to the electrical components.

(k) Attach the ami cabin attendant seat cable 26R-350, the connector backshell 26R-390 and the plug connectors 26R-380, 26R-400 to the lavatory structure.

(l) Attach the bonding straps 26R-275, 26R-295 with the screws 26R-325 and the washers 26R-335 to the electrical components.

(m) Attach the cable ties 26R-190 with the screws 26R-120, 26R-340 and the washers 26R-130 to the lavatory structure.

(n) Attach the nut 26R-320 and the washer 26R-310 to the lavatory structure.

(o) Attach the clamp 26R-330 with the screw 26R-300 and the washer 26R-310 to the lavatory structure.

TASK 25-41-51-400-802-T01
D2549030409600 D2549030410800

25. Assembly of the Electrical System

A. General

This task gives you the installation procedures of the component.

B. Job Set-up Information

(1) Not applicable

C. Procedure

WARNING: BE CAREFUL WHEN YOU USE SOLVENTS/CLEANING AGENTS, SEALANTS AND OTHER MATERIALS. OBEY THE MATERIAL MANUFACTURER'S INSTRUCTIONS AND THE LOCAL REGULATIONS. MAKE SURE THAT THERE IS A GOOD FLOW OF AIR THROUGH THE WORK AREA. DO NOT BREATHE THE FUMES. DO NOT SMOKE. DO NOT USE THESE MATERIALS NEAR A FLAME, SPARKS OR SOURCES OF HEAT. USE PROTECTIVE CLOTHING, GOGGLES AND GLOVES. IF YOU GET ONE OF THESE MATERIALS ON YOUR SKIN OR IN YOUR EYES, FLUSH IT AWAY WITH A FLOW OF CLEAN WATER. IF YOU GET ONE OF THESE MATERIALS IN YOUR MOUTH, GET IMMEDIATE MEDICAL AID. IN GENERAL, THESE MATERIALS ARE POISONOUS, FLAMMABLE AND SKIN IRRITANTS.

CAUTION: DO ALL THE WORK ON A CLEAN, SOFT SURFACE TO PREVENT DAMAGE TO THE COMPONENTS.

CAUTION: MAKE SURE THAT ALL THE PARTS ARE CLEAN BEFORE YOU ASSEMBLE THEM.

SUB TASK 25-41-51-440-025-A01

1. Assembly of the Electrical System (26S-1)

(a) Attach the microswitch 26S-250 with the screws 26S-260.

(b) Attach the mini inverter 26S-360 with the spacers 26S-370 and the screws 26S-380 to the lavatory structure.

NOTE: For further instructions, see CMMV 25-44-01_D2361 (mini inverter).

(c) Attach the loudspeaker 26S-240 to the lavatory structure.

NOTE: For further instructions, see CMMV 23-31-12_D7320 (loudspeaker).

(d) Attach the light assembly 26S-150 to the lavatory structure.

NOTE: For further instructions, see CMMV 33-27-01_DD704 (light assembly).

(e) Attach the call light 26S-110 to the lavatory structure.

NOTE: For further instructions, see CMMV 33-22-01_DD704 (call light).

(f) Attach the smoke detector sealing 26S-030 and the smoke detector 26S-020 with the screws 26S-040 and the nuts 26S-050 to the lavatory structure.

NOTE: For further instructions, see CMMV 26-18-18_F4885 (smoke detector).

(g) See Assembly of the Cable Harness Assembly for the assembly procedure of the cable harness assembly 26S-010.

(h) Connect the cables, the applicable bonding straps 26S-270, 26S-280, 26S-290, 26S-300, 26S-310 and the cable harness assembly 26S-010 to the electrical components.

(i) Attach the ami cabin attendant seat cable 26S-390, the connector backshell 26S-430 and the plug connectors 26S-420, 26S-440 to the lavatory structure.

(j) Attach the brackets 26S-120 with the screws 26S-130 and the washers 26S-140 to the lavatory structure.

(k) Attach the bracket 26S-210 and the cable ties 26S-200 with the screws 26S-130 and the washers 26S-140 to the lavatory structure.

(l) Attach the nut 26S-340 and the washer 26S-330 to the lavatory structure.

(m) Attach the clamp 26S-350 with the screw 26S-320 and the washer 26S-330 to the lavatory structure.

TASK 25-41-51-400-802-U01
D2549010400000

26. Assembly of the Electrical System

A. General

This task gives you the installation procedures of the component.

B. Job Set-up Information

(1) Not applicable

C. Procedure

WARNING: BE CAREFUL WHEN YOU USE SOLVENTS/CLEANING AGENTS, SEALANTS AND OTHER MATERIALS. OBEY THE MATERIAL MANUFACTURER'S INSTRUCTIONS AND THE LOCAL REGULATIONS. MAKE SURE THAT THERE IS A GOOD FLOW OF AIR THROUGH THE WORK AREA. DO NOT BREATHE THE FUMES. DO NOT SMOKE. DO NOT USE THESE MATERIALS NEAR A FLAME, SPARKS OR SOURCES OF HEAT. USE PROTECTIVE CLOTHING, GOGGLES AND GLOVES. IF YOU GET ONE OF THESE MATERIALS ON YOUR SKIN OR IN YOUR EYES, FLUSH IT AWAY WITH A FLOW OF CLEAN WATER. IF YOU GET ONE OF THESE MATERIALS IN YOUR MOUTH, GET IMMEDIATE MEDICAL AID. IN GENERAL, THESE MATERIALS ARE POISONOUS, FLAMMABLE AND SKIN IRRITANTS.

CAUTION: DO ALL THE WORK ON A CLEAN, SOFT SURFACE TO PREVENT DAMAGE TO THE COMPONENTS.

CAUTION: MAKE SURE THAT ALL THE PARTS ARE CLEAN BEFORE YOU ASSEMBLE THEM.

SUB TASK 25-41-51-440-026-A01

1. Assembly of the Electrical System (26T-1)

(a) Attach the microswitch 26T-190 with the screws 26T-200.

(b) Install and assemble the 2065VU switch panel 26T-470 as follows:

1 Attach the switch button switch 26T-560 to the printed circuit board PCB 26T-530.

2 Attach the protective lens 26T-570 to the switch button switch 26T-560.

3 Install and assemble the switch housing assembly 26T-480 as follows:

a Attach the switch housing 26T-490 with the screws 26T-540 and the spring washers 26T-550 to the printed circuit board PCB 26T-530.

4 Attach the plugs 26T-580 to the printed circuit board PCB 26T-530.

(c) Attach the mini inverter 26T-430 with the spacers 26T-440 and the screws 26T-450 to the lavatory structure.

NOTE: For further instructions, see CMMV 25-44-01_D2361 (mini inverter).

(d) Attach the loudspeaker 26T-180 to the lavatory structure.

NOTE: For further instructions, see CMMV 23-31-12_D7320 (loudspeaker).

(e) Attach the light assembly 26T-130 to the lavatory structure.

NOTE: For further instructions, see CMMV 33-27-01_DD704 (light assembly).

(f) Attach the call light 26T-100 to the lavatory structure.

NOTE: For further instructions, see CMMV 33-22-01_DD704 (call light).

(g) Attach the brackets 26T-110 with the screws 26T-120 and the washers 26T-030 to the lavatory structure.

(h) Attach the smoke detector sealing 26T-050 and the smoke detector 26T-020 with the screws 26T-040, the washers 26T-030 and the nuts 26T-460 to the lavatory structure.

NOTE: For further instructions, see CMMV 26-16-16_F4885 (smoke detector).

(i) See Assembly of the Cable Harness Assembly for the assembly procedure of the cable harness assembly 26T-010.

(j) Connect the cables, the applicable bonding straps 26T-230, 26T-240, 26T-250, 26T-260, 26T-270 and the cable harness assembly 26T-010 to the electrical components.

(k) Attach the ami cabin attendant seat cable 26T-350, the connector backshell 26T-390 and the plug connectors 26T-380, 26T-400 to the lavatory structure.

(l) Attach the screws 26T-120, 26T-330, the washers 26T-030, 26T-320 and the nuts 26T-340 to the lavatory structure.

(m) Attach the nut 26T-300 and the washer 26T-290 to the lavatory structure.

(n) Attach the clamp 26T-310 with the screw 26T-280 and the washer 26T-290 to the lavatory structure.

TASK 25-41-51-400-802-V01

D2549010405200 D2549010405600 D2549020301600 D2549020411200 D2549020412000 D2549020412200 D2549020412400 D2549020413200 D2549020413600 D2549020413800 D2549020414000 D2549020414600 D2549020414800 D2549020708200 D2549030413000 D2549030414000 D2549030414200 D2549030414600 D2549030700000 D2549030700600 D2549030700800 D2549030701400 D2549030701600 D2549030701800 D2549030702000 D2549030702200 D2549030702400 D2549030702800 D2549030703000 D2549030703200 D2549030703800 D2549030704000 D2549030704600 D2549030704800 D2549030705600 D2549040501200 D2549040501400 D2549040501600 D2549040501800 D2549040502000 R225401136-008 R225401136-014 R225401611-020 R225401671-000 R225401671-002 R225401673-006 R225401691-000 R225401691-002 R225401697-000 R225401697-002 R225401803-000 R225401803-002 R225401808-000 R225401814-000

27. Assembly of the Electrical System

A. General

This task gives you the installation procedures of the component.

B. Job Set-up Information

(1) Not applicable

C. Procedure

WARNING: BE CAREFUL WHEN YOU USE SOLVENTS/CLEANING AGENTS, SEALANTS AND OTHER MATERIALS. OBEY THE MATERIAL MANUFACTURER'S INSTRUCTIONS AND THE LOCAL REGULATIONS. MAKE SURE THAT THERE IS A GOOD FLOW OF AIR THROUGH THE WORK AREA. DO NOT BREATHE THE FUMES. DO NOT SMOKE. DO NOT USE THESE MATERIALS NEAR A FLAME, SPARKS OR SOURCES OF HEAT. USE PROTECTIVE CLOTHING, GOGGLES AND GLOVES. IF YOU GET ONE OF THESE MATERIALS ON YOUR SKIN OR IN YOUR EYES, FLUSH IT AWAY WITH A FLOW OF CLEAN WATER. IF YOU GET ONE OF THESE MATERIALS IN YOUR MOUTH, GET IMMEDIATE MEDICAL AID. IN GENERAL, THESE MATERIALS ARE POISONOUS, FLAMMABLE AND SKIN IRRITANTS.

CAUTION: DO ALL THE WORK ON A CLEAN, SOFT SURFACE TO PREVENT DAMAGE TO THE COMPONENTS.

CAUTION: MAKE SURE THAT ALL THE PARTS ARE CLEAN BEFORE YOU ASSEMBLE THEM.

SUB TASK 25-41-51-440-027-A01

D2549010405200 D2549010405600 D2549020301600 D2549020411200 D2549020412000 D2549020412200 D2549020412400 D2549020413200

D2549020413600 D2549020413800 D2549020414000 D2549020414600 D2549020414800 D2549020708200 D2549030413000 D2549030414000 D2549030414200 D2549030414600 D2549030700000 D2549030700800 D2549030701400 D2549030701600 D2549030701800 D2549030702000 D2549030702200 D2549030702400 D2549030702800 D2549030703000 D2549030703800 D2549030704000 D2549030704600 D2549030704800 D2549030705600 D2549040501200 D2549040501400 D2549040501600 D2549040501800 D2549040502000 R225401136-008 R225401136-014 R225401611-020 R225401671-000 R225401671-002 R225401673-006 R225401691-000 R225401691-002 R225401697-000 R225401697-002 R225401803-000 R225401803-002 R225401808-000 R225401814-000

1. Assembly of the Electrical System (26U-1)

   (a) Attach the microswitch 26U-250 with the screws 26U-260.

   (b) Attach the mini inverter 26U-360 with the spacers 26U-370 and the screws 26U-380 to the lavatory structure.

   NOTE: For further instructions, see CMMV 25-44-01_D2361 (mini inverter).

   (c) Attach the loudspeaker 26U-240 to the lavatory structure.

   NOTE: For further instructions, see CMMV 23-31-12_D7320 (loudspeaker).

   (d) Attach the light assembly 26U-150 to the lavatory structure.

   NOTE: For further instructions, see CMMV 33-27-01_DD704 (light assembly).

   (e) Attach the call light 26U-110 to the lavatory structure.

   NOTE: For further instructions, see CMMV 33-22-01_DD704 (call light).

   (f) Attach the smoke detector sealing 26U-030 and the smoke detector 26U-020 with the screws 26U-040 and the nuts 26U-050 to the lavatory structure.

   NOTE: For further instructions, see CMMV 26-18-18_F4885 (smoke detector).

   (g) See Assembly of the Cable Harness Assembly for the assembly procedure of the cable harness assembly 26U-010.

   (h) Connect the cables, the applicable bonding straps 26U-270, 26U-280, 26U-290, 26U-300, 26U-310 and the cable harness assembly 26U-010 to the electrical components.

(i) Attach the ami cabin attendant seat cable 26U-390, the connector backshell 26U-430 and the plug connectors 26U-420, 26U-440 to the lavatory structure.

(j) Attach the bracket 26U-120 with the screws 26U-130 and the washers 26U-140 to the lavatory structure.

(k) Attach the brackets 26U-210 and the cable ties 26U-200 with the screws 26U-130 and the washers 26U-140 to the lavatory structure.

(l) Attach the nut 26U-340 and the washer 26U-330 to the lavatory structure.

(m) Attach the clamp 26U-350 with the screw 26U-320 and the washer 26U-330 to the lavatory structure.

SUB TASK 25-41-51-440-027-B01
D2549030703200

2. Assembly of the Electrical System (26U-1)

(a) Attach the microswitch 26U-250 with the screws 26U-260.

(b) Install and assemble the 2065VU switch panel 26U-470 as follows:

1 Attach the switch button switch 26U-560 to the printed circuit board PCB 26U-530.

2 Attach the protective lens 26U-570 to the switch button switch 26U-560.

3 Install and assemble the switch housing assembly 26U-480 as follows:
a Attach the switch housing 26U-490 with the screws 26U-540 and the spring washers 26U-550 to the printed circuit board PCB 26U-530.

4 Attach the plugs 26U-580 to the printed circuit board PCB 26U-530.

(c) Attach the mini inverter 26U-360 with the spacers 26U-370 and the screws 26U-380 to the lavatory structure.

NOTE: For further instructions, see CMMV 25-44-01_D2361 (mini inverter).

(d) Attach the loudspeaker 26U-240 to the lavatory structure.

NOTE: For further instructions, see CMMV 23-31-12_D7320 (loudspeaker).

(e) Attach the light assembly 26U-150 to the lavatory structure.

NOTE: For further instructions, see CMMV 33-27-01_DD704 (light assembly).

(f) Attach the call light 26U-110 to the lavatory structure.

NOTE: For further instructions, see CMMV 33-22-01_DD704 (call light).

(g) Attach the smoke detector sealing 26U-030 and the smoke detector 26U-020 with the screws 26U-040 and the nuts 26U-050 to the lavatory structure.

NOTE: For further instructions, see CMMV 26-18-18_F4885 (smoke detector).

(h) See Assembly of the Cable Harness Assembly for the assembly procedure of the cable harness assembly 26U-010.

(i) Connect the cables, the applicable bonding straps 26U-270, 26U-280, 26U-290, 26U-300, 26U-310 and the cable harness assembly 26U-010 to the electrical components.

(j) Attach the ami cabin attendant seat cable 26U-390, the connector backshell 26U-430 and the plug connectors 26U-420, 26U-440 to the lavatory structure.

(k) Attach the bracket 26U-120 with the screws 26U-130 and the washers 26U-140 to the lavatory structure.

(l) Attach the brackets 26U-210 and the cable ties 26U-200 with the screws 26U-130 and the washers 26U-140 to the lavatory structure.

(m) Attach the nut 26U-340 and the washer 26U-330 to the lavatory structure.

(n) Attach the clamp 26U-350 with the screw 26U-320 and the washer 26U-330 to the lavatory structure.

SUB TASK 25-41-51-440-027-C01
D2549030700600

3. Assembly of the Electrical System (26U-1)

(a) Attach the microswitch 26U-250 with the screws 26U-260.

(b) Attach the mini inverter 26U-360 with the spacers 26U-370 and the screws 26U-380 to the lavatory structure.

NOTE: For further instructions, see CMMV 25-44-01_D2361 (mini inverter).

(c) Attach the loudspeaker 26U-240 to the lavatory structure.

NOTE: For further instructions, see CMMV 23-31-12_D7320 (loudspeaker).

(d) Attach the light assembly 26U-150 to the lavatory structure.

NOTE: For further instructions, see CMMV 33-27-01_DD704 (light assembly).

(e) Attach the call light 26U-110 to the lavatory structure.

NOTE: For further instructions, see CMMV 33-22-01_DD704 (call light).

(f) Attach the smoke detector sealing 26U-030 and the smoke detector 26U-020 with the screws 26U-040 and the nuts 26U-050 to the lavatory structure.

NOTE: For further instructions, see CMMV 26-18-18_F4885 (smoke detector).

(g) See Assembly of the Cable Harness Assembly for the assembly procedure of the cable harness assembly 26U-010.

(h) Connect the cables, the applicable bonding straps 26U-270, 26U-280, 26U-290, 26U-300, 26U-310 and the cable harness assembly 26U-010 to the electrical components.

(i) Attach the ami cabin attendant seat cable 26U-390, the connector backshell 26U-430 and the plug connectors 26U-420, 26U-440 to the lavatory structure.

(j) Attach the bonding straps 26U-315 with the screws 26U-325 and the washers 26U-335 to the electrical components.

(k) Attach the bracket 26U-120 with the screws 26U-130 and the washers 26U-140 to the lavatory structure.

(l) Attach the brackets 26U-210 and the cable ties 26U-200 with the screws 26U-130 and the washers 26U-140 to the lavatory structure.

(m) Attach the nut 26U-340 and the washer 26U-330 to the lavatory structure.

(n) Attach the clamp 26U-350 with the screw 26U-320 and the washer 26U-330 to the lavatory structure.

TASK 25-41-51-400-802-W01
D2549030610200 D2549030701200

28. Assembly of the Electrical System

A. General

This task gives you the installation procedures of the component.

B. Job Set-up Information

(1) Not applicable

C. Procedure

WARNING: BE CAREFUL WHEN YOU USE SOLVENTS/CLEANING AGENTS, SEALANTS AND OTHER MATERIALS. OBEY THE MATERIAL MANUFACTURER'S INSTRUCTIONS AND THE LOCAL REGULATIONS. MAKE SURE THAT THERE IS A GOOD FLOW OF AIR THROUGH THE WORK AREA. DO NOT BREATHE THE FUMES. DO NOT SMOKE. DO NOT USE THESE MATERIALS NEAR A FLAME, SPARKS OR SOURCES OF HEAT. USE PROTECTIVE CLOTHING, GOGGLES AND GLOVES. IF YOU GET ONE OF THESE MATERIALS ON YOUR SKIN OR IN YOUR EYES, FLUSH IT AWAY WITH A FLOW OF CLEAN WATER. IF YOU GET ONE OF THESE MATERIALS IN YOUR MOUTH, GET IMMEDIATE MEDICAL AID. IN GENERAL, THESE MATERIALS ARE POISONOUS, FLAMMABLE AND SKIN IRRITANTS.

CAUTION: DO ALL THE WORK ON A CLEAN, SOFT SURFACE TO PREVENT DAMAGE TO THE COMPONENTS.

CAUTION: MAKE SURE THAT ALL THE PARTS ARE CLEAN BEFORE YOU ASSEMBLE THEM.

SUB TASK 25-41-51-440-028-A01

1. Assembly of the Electrical System (26V-1)

(a) Attach the microswitch 26V-080 with the screws 26V-170.

(b) Attach the mini inverter 26V-110 with the spacers 26V-150 and the screws 26V-180 to the lavatory structure.

NOTE: For further instructions, see CMMV 25-44-01_D2361 (mini inverter).

(c) Attach the loudspeaker 26V-090 to the lavatory structure.

NOTE: For further instructions, see CMMV 23-31-12_D7320 (loudspeaker).

(d) Attach the screws 26V-160 and the washers 26V-210 to the lavatory structure.

(e) Attach the light assembly 26V-070 to the lavatory structure.

NOTE: For further instructions, see CMMV 33-27-01_DD704 (light assembly).

(f) Attach the call light 26V-060 to the lavatory structure.

NOTE: For further instructions, see CMMV 33-22-01_DD704 (call light).

(g) Attach the bracket 26V-100 with the screws 26V-160 and the washers 26V-210 to the lavatory structure.

(h) Attach the smoke detector sealing 26V-030 and the smoke detector 26V-020 with the bolts 26V-190, the washers 26V-210 and the nuts 26V-200 to the lavatory structure.

NOTE: For further instructions, see CMMV 26-18-18_F4885 (smoke detector).

(i) See Assembly of the Cable Harness Assembly for the assembly procedure of the cable harness assembly 26V-010.

(j) Connect the cables, the applicable bonding straps 26V-420, 26V-430, 26V-440, 26V-450, 26V-460, 26V-480, 26V-490, 26V-500, 26V-510 and the cable harness assembly 26V-010 to the electrical components.

(k) Install the ami cabin attendant seat cable 26V-220 as follows:

1 Attach the ami cabin attendant seat cable 26V-220, the connector backshell 26V-240, the plug connectors 26V-230, 26V-250, the cable bracket 26V-260, the protective cap 26V-270, the plugs 26V-360 and the labels 26V-400 to the lavatory structure.

(l) Attach the screw 26V-550 and the washer 26V-210 to the lavatory structure.

(m) Attach the screws 26V-160 and the washers 26V-210 to the lavatory structure.

(n) Attach the screw 26V-560 and the washer 26V-210 to the lavatory structure.

(o) Attach the nut 26V-540 and the washer 26V-530 to the lavatory structure.

(p) Attach the nut 26V-200 and the washer 26V-210 to the lavatory structure.

(q) Attach the clamp 26V-470 with the screw 26V-520 and the washer 26V-530 to the lavatory structure.

TASK 25-41-51-400-803-A01

D2549010500000 D2549010500400 D2549010500600 D2549010500800 D2549010501000 D2549010501200 D2549010501400 D2549010501600 D2549010501800 D2549010502000 D2549010502200 D2549010502600 D2549010502800 D2549010503200 D2549010503400 D2549010503600 D2549010503800 D2549010504200 D2549010504400 D2549010504600 D2549010504800 D2549010505000 D2549010505200 D2549010505400 D2549010505800 D2549010506000 D2549010506200 D2549010506400 D2549010507000 D2549010507200 D2549010507400 D2549010507600 D2549010508200 D2549010508400 D2549010508600 D2549010508800 D2549010509000 D2549010509200 D2549010511200 D2549020500000 D2549020500200 D2549020500400 D2549020500600 D2549020500800 D2549020501000 D2549020501200 D2549020501400 D2549020501600 D2549020501800 D2549020502000 D2549020502400 D2549020502600 D2549020502800 D2549020503000 D2549020503200 D2549020503400 D2549020503600 D2549020503800 D2549020504000 D2549020504200 D2549020504400 D2549020504600 D2549020504800 D2549020505000 D2549020505200 D2549020505400 D2549020505800 D2549020506000 D2549020600000 D2549020600200 D2549020600800 D2549020601000 D2549020601200 D2549020601400 D2549020601600 D2549020601800 D2549020602000 D2549020602400 D2549020602600 D2549020602800 D2549020603200 D2549020603400 D2549020603800 D2549020606600 D2549020607200 D2549030500200 D2549030500400 D2549030500600 D2549030500800 D2549030501000 D2549030501200 D2549030501400 D2549030501600 D2549030501800 D2549030502000 D2549030502200 D2549030502400 D2549030502600 D2549030502800 D2549030503000 D2549030503200 D2549030503400 D2549030503600 R225401107-000 R225401107-002 R225401115-002 R225401133-000 R225401134-000 R225401139-000 R225401145-000 R225401146-000 R225401146-002 R225401188-000 R225401188-002 R225401188-004 R225401188-006

29. Assembly of the Waste Water System

A. General

This task gives you the assembly procedures of the component.

B. Job Set-up Information

(1) Not applicable

C. Procedure

WARNING: **BE CAREFUL WHEN YOU USE SOLVENTS/CLEANING AGENTS, SEALANTS AND OTHER MATERIALS. OBEY THE MATERIAL MANUFACTURER'S INSTRUCTIONS AND THE LOCAL REGULATIONS. MAKE SURE THAT THERE IS A GOOD FLOW OF AIR THROUGH THE WORK AREA. DO NOT BREATHE THE FUMES. DO NOT SMOKE. DO NOT USE THESE MATERIALS NEAR A FLAME, SPARKS OR SOURCES OF HEAT. USE PROTECTIVE CLOTHING, GOGGLES AND GLOVES. IF YOU GET ONE OF THESE MATERIALS ON YOUR SKIN OR IN YOUR EYES, FLUSH IT AWAY WITH A FLOW OF CLEAN WATER. IF YOU GET ONE OF THESE MATERIALS IN YOUR MOUTH, GET IMMEDIATE MEDICAL AID. IN GENERAL, THESE MATERIALS ARE POISONOUS, FLAMMABLE AND SKIN IRRITANTS.**

CAUTION: **DO ALL THE WORK ON A CLEAN, SOFT SURFACE TO PREVENT DAMAGE TO THE COMPONENTS.**

CAUTION: **MAKE SURE THAT ALL THE PARTS ARE CLEAN BEFORE YOU ASSEMBLE THEM.**

SUB TASK 25-41-51-440-029-A01

D2549020602800 D2549020603200 D2549030502600 D2549030503400 R225401134-000 R225401188-006

1. Assembly of the Waste Water System (23-1)

   (a) Attach the bracket 23-100 with the screws 23-120, the washers 23-130, 23-132 and the nuts 23-110 to the lavatory structure.

   (b) Attach the drain valve 23-090 with the screws 23-140, the washers 23-150, the spacers 23-141 and the nuts 23-080 to the bracket 23-100.

   NOTE: **For further instructions, see CMMV 38-30-02_91816 (drain valve).**

   (c) Attach the ground cable in accordance with the Process and Material Specification PMS 01-04-58 to the drain valve 23-090.

   (d) Attach the hose 23-180 with the clamps 23-030 to the tube 23-190 and to the drain valve 23-090.

   (e) Attach the tube 23-190 with the clamps 23-050, the spacers 23-200, the screws 23-260 and the washers 23-130 to the lavatory structure.

   (f) Attach the clamps 23-030 and the tube 23-190 to the lavatory structure.

   (g) Attach the drain assembly 23-010 to the lavatory structure.

(h) Attach the hose 23-040 with the clamps 23-030 to the drain assembly 23-010 and to the drain valve 23-090.

NOTE: For further instructions, see CMMV 38-30-09_C3406 (drain assembly).

(i) Attach the hose 23-040 with the clamp 23-160, the spacer 23-230, the screw 23-070, the washers 23-130 and the nut 23-110 to the lavatory structure.

(j) Attach the hose 23-020 with the clamps 23-030, 23-031 to the drain assembly 23-010 and to the lavatory structure.

(k) Attach the piece of the drain assembly 23-010 with the screws 23-033 and the washers 23-035.

SUB TASK 25-41-51-440-029-C01

D2549010500000 D2549010500400 D2549010500600 D2549010500800 D2549010501000 D2549010501200 D2549010501400 D2549010501600 D2549010501800 D2549010502000 D2549010502200 D2549010502600 D2549010502800 D2549010503200 D2549010503400 D2549010503600 D2549010503800 D2549010504200 D2549010504400 D2549010504600 D2549010504800 D2549010505000 D2549010505200 D2549010505400 D2549010505800 D2549010506000 D2549010506200 D2549010506400 D2549010507000 D2549010507200 D2549010507400 D2549010507600 D2549010508200 D2549010508400 D2549010508600 D2549010508800 D2549010509000 D2549010509200 D2549010511200 D2549020500000 D2549020500200 D2549020500400 D2549020500600 D2549020500800 D2549020501000 D2549020501200 D2549020501400 D2549020501600 D2549020501800 D2549020502000 D2549020502400 D2549020502600 D2549020502800 D2549020503000 D2549020503200 D2549020503400 D2549020503600 D2549020503800 D2549020504000 D2549020504200 D2549020504400 D2549020504600 D2549020504800 D2549020505000 D2549020505200 D2549020505400 D2549020505800 D2549020506000 D2549020600000 D2549020600200 D2549020600800 D2549020601000 D2549020601200 D2549020601400 D2549020601600 D2549020601800 D2549020602000 D2549020602400 D2549020602600 D2549020603400 D2549020603800 D2549020606600 D2549020607200 D2549030500200 D2549030500400 D2549030500600 D2549030500800 D2549030501000 D2549030501200 D2549030501400 D2549030501600 D2549030501800 D2549030502000 D2549030502200 D2549030502400 D2549030502800 D2549030503000 D2549030503200 D2549030503600 R225401107-000 R225401107-002 R225401115-002 R225401133-000 R225401139-000 R225401145-000 R225401146-000 R225401146-002 R225401188-000 R225401188-002 R225401188-004

2. Assembly of the Waste Water System (23-1)

(a) Attach the bracket 23-100 with the screws 23-120, the washers 23-130 and the nuts 23-110 to the lavatory structure.

(b) Attach the drain valve 23-090 with the screws 23-140, the washers 23-150 and the nuts 23-080 to the bracket 23-100.

NOTE: For further instructions, see CMMV 38-30-02_91816 (drain valve).

(c) Attach the ground cable in accordance with the Process and Material Specification PMS 01-04-58 to the drain valve 23-090.

(d) Attach the hose 23-180 with the clamps 23-030 to the tube 23-190 and to the drain valve 23-090.

(e) Attach the tube 23-190 with the clamps 23-050, the spacers 23-200, the screws 23-260 and the washers 23-130 to the lavatory structure.

(f) Attach the clamps 23-030 and the tube 23-190 to the lavatory structure.

(g) Attach the drain assembly 23-010 to the lavatory structure.

(h) Attach the hose 23-040 with the clamps 23-030 to the drain assembly 23-010 and to the drain valve 23-090.

NOTE: For further instructions, see CMMV 38-30-02_C3406 (drain assembly).

(i) Attach the hose 23-040 with the clamp 23-160, the spacer 23-230, the screw 23-070, the washers 23-130 and the nut 23-110 to the lavatory structure.

(j) Attach the hose 23-020 with the clamps 23-030, 23-031 to the drain assembly 23-010 and to the lavatory structure.

TASK 25-41-51-400-803-B01
D2549010508000

30. Assembly of the Waste Water System

A. General

This task gives you the assembly procedures of the component.

B. Job Set-up Information

(1) Not applicable

C. Procedure

WARNING: BE CAREFUL WHEN YOU USE SOLVENTS/CLEANING AGENTS, SEALANTS AND OTHER MATERIALS. OBEY THE MATERIAL MANUFACTURER'S INSTRUCTIONS AND THE LOCAL REGULATIONS. MAKE SURE THAT THERE IS A GOOD FLOW OF AIR THROUGH THE WORK AREA. DO NOT BREATHE THE FUMES. DO NOT SMOKE. DO NOT USE THESE MATERIALS NEAR A FLAME, SPARKS OR SOURCES OF HEAT. USE PROTECTIVE CLOTHING, GOGGLES AND GLOVES. IF YOU GET ONE OF THESE MATERIALS ON YOUR SKIN OR IN YOUR EYES, FLUSH IT AWAY WITH A FLOW OF CLEAN WATER. IF YOU GET ONE OF THESE MATERIALS IN YOUR MOUTH, GET IMMEDIATE MEDICAL AID. IN GENERAL, THESE MATERIALS ARE POISONOUS, FLAMMABLE AND SKIN IRRITANTS.

CAUTION: DO ALL THE WORK ON A CLEAN, SOFT SURFACE TO PREVENT DAMAGE TO THE COMPONENTS.

CAUTION: MAKE SURE THAT ALL THE PARTS ARE CLEAN BEFORE YOU ASSEMBLE THEM.

SUB TASK 25-41-51-440-030-A01

1. Assembly of the Waste Water System (23A-1)

(a) Attach the bracket 23A-130 with the screws 23A-140, the washers 23A-200 and the nuts 23A-150 to the lavatory structure.

(b) Attach the drain valve 23A-100 with the screws 23A-110, the washers 23A-120 and the nuts 23A-090 to the bracket 23A-130.

NOTE: For further instructions, see CMMV 38-30-02_91816 (drain valve).

(c) Attach the ground cable in accordance with the Process and Material Specification PMS 01-04-58 to the drain valve 23A-100.

(d) Attach the hose 23A-170 with the clamps 23A-030 to the tube 23A-180 and to the drain valve 23A-100.

(e) Attach the tube 23A-180 with the clamps 23A-050, the spacers 23A-060, the screws 23A-190 and the washers 23A-200 to the lavatory structure.

(f) Attach the tube 23A-180 with the clamps 23A-030 to the lavatory structure.

(g) Attach the drain assembly 23A-010 to the lavatory structure.

(h) Attach the hose 23A-040 with the clamps 23A-030 to the drain assembly 23A-010 and to the drain valve 23A-100.

NOTE: For further instructions, see CMMV 38-30-02_C3406 (drain assembly).

(i) Attach the hose 23A-040 with the clamp 23A-080, the spacer 23A-070, the screw 23A-160, the washer 23A-200 and the nut 23A-150 to the lavatory structure.

(j) Attach the hose 23A-020 with the clamps 23A-030 to the drain assembly 23A-010 and to the lavatory structure.

TASK 25-41-51-400-803-C01

D2547160900200 D2547160900400 D2549010400000 D2549010400200 D2549010400400
D2549010400600 D2549010400800 D2549010401000 D2549010401400 D2549010402200
D2549010402400 D2549010402600 D2549010402800 D2549010403000 D2549010403200
D2549010403600 D2549010404400 D2549010404600 D2549010404800 D2549010405000
D2549010405200 D2549010405400 D2549010405600 D2549010405800 D2549010406000
D2549010406200 D2549010406400 D2549010406800 D2549010407000 D2549010509400
D2549010509600 D2549010509800 D2549010510000 D2549010510200 D2549010510400
D2549010510600 D2549010510800 D2549010511000 D2549010511400 D2549010511600
D2549010511800 D2549010512000 D2549010512200 D2549010512400 D2549010512600
D2549010513000 D2549010513200 D2549010513400 D2549010513600 D2549010513800
D2549010514000 D2549010514200 D2549010514400 D2549010514600 D2549010514800
D2549010600000 D2549010600200 D2549010600400 D2549010600600 D2549010600800
D2549010601000 D2549010601200 D2549010601400 D2549010601600 D2549010601800
D2549010602000 D2549010602200 D2549010602400 D2549010602600 D2549010602800
D2549010603000 D2549010603200 D2549010603400 D2549010603600 D2549010603800
D2549010604000 D2549010604200 D2549010604400 D2549010604600 D2549010604800
D2549010605000 D2549010605200 D2549010605600 D2549010605800 D2549010606000
D2549010606200 D2549010606400 D2549010606600 D2549010606800 D2549010607000
D2549010607200 D2549010607400 D2549010607600 D2549010607800 D2549010608200
D2549010608400 D2549010608600 D2549010608800 D2549010609000 D2549010609200
D2549010609400 D2549010609600 D2549010609800 D2549010610000 D2549010610200
D2549010610600 D2549010610800 D2549010611000 D2549010611200 D2549010611400
D2549010611600 D2549010611800 D2549010612000 D2549010612200 D2549010612400
D2549010612600 D2549010613200 D2549010613400 D2549010613600 D2549010613800
D2549010614200 D2549010614400 D2549010614800 D2549020300000 D2549020300400
D2549020300600 D2549020300800 D2549020301000 D2549020301600 D2549020301800
D2549020302800 D2549020400000 D2549020400400 D2549020400600 D2549020400800
D2549020401000 D2549020401200 D2549020401600 D2549020402000 D2549020402200
D2549020402400 D2549020403000 D2549020403200 D2549020403800 D2549020404000
D2549020404200 D2549020404400 D2549020404800 D2549020405000 D2549020405200
D2549020405400 D2549020405600 D2549020405800 D2549020406000 D2549020406200
D2549020406400 D2549020407000 D2549020407200 D2549020407400 D2549020407600
D2549020407800 D2549020408200 D2549020408800 D2549020409000 D2549020409600
D2549020410200 D2549020410800 D2549020411000 D2549020411200 D2549020411400
D2549020411600 D2549020412400 D2549020412800 D2549020413400 D2549020413600
D2549020413800 D2549020414000 D2549020414200 D2549020414600 D2549020414800
D2549020502200 D2549020505600 D2549020506200 D2549020506400 D2549020506600
D2549020506800 D2549020507000 D2549020507200 D2549020507400 D2549020507600
D2549020507800 D2549020508000 D2549020508200 D2549020508400 D2549020508600
D2549020508800 D2549020509000 D2549020509200 D2549020509600 D2549020509800
D2549020510000 D2549020510400 D2549020510600 D2549020510800 D2549020511000
D2549020511200 D2549020511600 D2549020511800 D2549020512000 D2549020512200
D2549020512400 D2549020512600 D2549020512800 D2549020513000 D2549020513200
D2549020513400 D2549020513800 D2549020514000 D2549020514200 D2549020514400
D2549020514600 D2549020514800 D2549020602200 D2549020604200 D2549020604400
D2549020604600 D2549020604800 D2549020605000 D2549020605200 D2549020605400

D2549020605600 D2549020605800 D2549020606000 D2549020606800 D2549020607000
D2549020607400 D2549020607600 D2549020607800 D2549020608200 D2549020608400
D2549020608600 D2549020608800 D2549020609000 D2549020609200 D2549020609400
D2549020609600 D2549020609800 D2549020610000 D2549020610200 D2549020610400
D2549020610600 D2549020610800 D2549020611000 D2549020611200 D2549020611400
D2549020611600 D2549020611800 D2549020612000 D2549020612200 D2549020612400
D2549020612600 D2549020612800 D2549020613000 D2549020613200 D2549020613600
D2549020613800 D2549020614000 D2549020614400 D2549020614600 D2549020614800
D2549020700000 D2549020700200 D2549020700400 D2549020700600 D2549020700800
D2549020701000 D2549020701200 D2549020701400 D2549020701600 D2549020701800
D2549020702000 D2549020702200 D2549020702400 D2549020702600 D2549020702800
D2549020703200 D2549020703400 D2549020703600 D2549020703800 D2549020704000
D2549020704200 D2549020704400 D2549020704600 D2549020704800 D2549020705000
D2549020705200 D2549020705400 D2549020705600 D2549020705800 D2549020706000
D2549020706200 D2549020706400 D2549020706600 D2549020706800 D2549020707000
D2549020707200 D2549020707400 D2549020707600 D2549020707800 D2549020708000
D2549020708200 D2549020708400 D2549020708600 D2549020708800 D2549020709000
D2549020709200 D2549020709400 D2549020709600 D2549020709800 D2549020710000
D2549020710200 D2549020710400 D2549020710600 D2549020710800 D2549020711000
D2549020711200 D2549020711400 D2549020711600 D2549020712200 D2549020712400
D2549020712800 D2549020713000 D2549020713200 D2549020713400 D2549020713600
D2549020713800 D2549020714000 D2549020714400 D2549020714600 D2549020800000
D2549020800200 D2549020800400 D2549020800600 D2549020801000 D2549020801200
D2549020801400 D2549020801600 D2549020802000 D2549020802200 D2549020802400
D2549020802600 D2549020802800 D2549020803000 D2549020803200 D2549020803400
D2549020803600 D2549020803800 D2549020804000 D2549020804200 D2549020804800
D2549020805000 D2549020805200 D2549020805400 D2549020805600 D2549020805800
D2549020806000 D2549020806200 D2549020806400 D2549020806600 D2549020806800
D2549020807200 D2549020807400 D2549020807600 D2549020807800 D2549020808400
D2549020808600 D2549020808800 D2549020809000 D2549020809400 D2549020809600
D2549020809800 D2549020810200 D2549020810800 D2549020811200 D2549020811600
D2549020811800 D2549020812000 D2549020812200 D2549020812800 D2549020813000
D2549020813200 D2549020813800 D2549020814000 D2549020814200 D2549020814400
D2549030400000 D2549030400200 D2549030400400 D2549030400600 D2549030401200
D2549030401400 D2549030401600 D2549030401800 D2549030402000 D2549030402200
D2549030402400 D2549030402600 D2549030402800 D2549030403000 D2549030403400
D2549030403600 D2549030403800 D2549030404000 D2549030404200 D2549030404400
D2549030404600 D2549030404800 D2549030405000 D2549030405200 D2549030405400
D2549030405600 D2549030405800 D2549030406400 D2549030406600 D2549030406800
D2549030407000 D2549030407200 D2549030407600 D2549030407800 D2549030408200
D2549030408400 D2549030408600 D2549030409000 D2549030409200 D2549030409400
D2549030409800 D2549030410000 D2549030410200 D2549030410400 D2549030411400
D2549030411600 D2549030411800 D2549030412200 D2549030413400 D2549030414000
D2549030414400 D2549030414600 D2549030414800 D2549030503800 D2549030504000
D2549030504200 D2549030504600 D2549030504800 D2549030505200 D2549030505400
D2549030505600 D2549030505800 D2549030506000 D2549030506200 D2549030506400
D2549030506600 D2549030506800 D2549030507000 D2549030507200 D2549030507400

D2549030507600 D2549030507800 D2549030508000 D2549030508200 D2549030508400
D2549030508600 D2549030508800 D2549030509000 D2549030509200 D2549030509400
D2549030509600 D2549030509800 D2549030510000 D2549030510200 D2549030510400
D2549030510600 D2549030510800 D2549030511000 D2549030511200 D2549030511400
D2549030511600 D2549030511800 D2549030512000 D2549030512200 D2549030512400
D2549030512800 D2549030513000 D2549030513200 D2549030513400 D2549030513600
D2549030513800 D2549030514000 D2549030514200 D2549030514400 D2549030514600
D2549030514800 D2549030600000 D2549030600200 D2549030600400 D2549030600600
D2549030600800 D2549030601000 D2549030601200 D2549030601400 D2549030601600
D2549030601800 D2549030602000 D2549030602200 D2549030602400 D2549030602600
D2549030602800 D2549030603000 D2549030603200 D2549030603400 D2549030603600
D2549030603800 D2549030604200 D2549030604400 D2549030604600 D2549030604800
D2549030605000 D2549030605200 D2549030605400 D2549030605600 D2549030605800
D2549030606000 D2549030606200 D2549030606400 D2549030606600 D2549030606800
D2549030607000 D2549030607200 D2549030607400 D2549030607600 D2549030607800
D2549030608000 D2549030608200 D2549030608400 D2549030608600 D2549030608800
D2549030609000 D2549030609200 D2549030609800 D2549030610000 D2549030610200
D2549030610600 D2549030611000 D2549030611200 D2549030611400 D2549030611600
D2549030611800 D2549030612000 D2549030612200 D2549030612400 D2549030612600
D2549030612800 D2549030613200 D2549030613400 D2549030613600 D2549030613800
D2549030614000 D2549030614200 D2549030614400 D2549030614800 D2549030700000
D2549030700200 D2549030700400 D2549030700600 D2549030700800 D2549030701000
D2549030702200 D2549030702400 D2549030702600 D2549030702800 D2549030703000
D2549030703200 D2549030703400 D2549030703600 D2549030703800 D2549030704000
D2549030704400 D2549030704600 D2549030704800 D2549040500200 D2549040500400
D2549040500800 D2549040501000 D2549040501400 D2549040501800 D2549040502000
R225401107-004 R225401115-000 R225401134-002 R225401134-004 R225401134-006
R225401134-008 R225401134-010 R225401134-012 R225401134-014 R225401134-016
R225401134-018 R225401134-020 R225401134-022 R225401134-024 R225401134-026
R225401134-028 R225401134-030 R225401134-032 R225401134-034 R225401134-036
R225401134-038 R225401136-000 R225401136-004 R225401136-006 R225401136-008
R225401136-010 R225401136-014 R225401136-016 R225401136-018 R225401136-020
R225401136-022 R225401137-000 R225401137-002 R225401137-004 R225401137-006
R225401137-008 R225401137-010 R225401137-012 R225401137-014 R225401137-016
R225401142-000 R225401142-002 R225401145-002 R225401145-004 R225401145-006
R225401145-008 R225401145-010 R225401145-012 R225401145-014 R225401152-000
R225401152-002 R225401152-004 R225401152-006 R225401152-008 R225401152-010
R225401153-000 R225401159-000 R225401160-000 R225401160-002 R225401168-000
R225401168-002 R225401168-004 R225401168-006 R225401168-008 R225401168-010
R225401168-012 R225401168-014 R225401168-016 R225401168-018 R225401168-020
R225401168-022 R225401168-024 R225401168-026 R225401168-028 R225401172-000
R225401172-002 R225401172-004 R225401172-006 R225401172-008 R225401172-010
R225401172-012 R225401172-014 R225401172-016 R225401172-018 R225401175-000
R225401175-002 R225401176-000 R225401183-000 R225401183-002 R225401183-004
R225401183-006 R225401183-008 R225401192-000 R225401192-002 R225401195-000
R225401196-000 R225401196-002 R225401196-004 R225401196-006 R225401196-008
R225401196-010 R225401196-012 R225401196-014 R225401196-016 R225401196-020

R225401196-022 R225401196-024 R225401196-034 R225401196-036 R225401196-038
R225401196-040 R225401196-042 R225401196-044 R225401196-046 R225401196-048
R225401196-050 R225401196-052 R225401196-054 R225401196-056 R225401196-058
R225401196-060 R225401196-062 R225401196-066 R225401196-068 R225401196-070
R225401199-000 R225401199-002 R225401199-004 R225401199-006 R225401199-008
R225401600-000 R225401600-002 R225401600-004 R225401603-000 R225401605-000
R225401605-002 R225401611-006 R225401611-008 R225401611-010 R225401611-012
R225401611-018 R225401613-000 R225401614-000 R225401618-000 R225401618-002
R225401619-000 R225401619-002 R225401622-000 R225401622-002 R225401624-000
R225401625-000 R225401627-004 R225401629-000 R225401629-002 R225401639-000
R225401639-002 R225401643-000 R225401643-002 R225401648-000 R225401648-002
R225401648-004 R225401648-008 R225401649-000 R225401656-000 R225401656-002
R225401662-002 R225401671-000 R225401671-002 R225401673-002 R225401673-004
R225401673-006 R225401675-000 R225401676-000 R225401683-000 R225401685-000
R225401685-002 R225401691-002 R225401693-000 R225401697-000 R225401697-002
R225401803-000 R225401803-002 R225401811-000 R225401814-000

31. Assembly of the Waste Water System

A. General

This task gives you the assembly procedures of the component.

B. Job Set-up Information

(1) Not applicable

C. Procedure

WARNING: BE CAREFUL WHEN YOU USE SOLVENTS/CLEANING AGENTS, SEALANTS AND OTHER MATERIALS. OBEY THE MATERIAL MANUFACTURER'S INSTRUCTIONS AND THE LOCAL REGULATIONS. MAKE SURE THAT THERE IS A GOOD FLOW OF AIR THROUGH THE WORK AREA. DO NOT BREATHE THE FUMES. DO NOT SMOKE. DO NOT USE THESE MATERIALS NEAR A FLAME, SPARKS OR SOURCES OF HEAT. USE PROTECTIVE CLOTHING, GOGGLES AND GLOVES. IF YOU GET ONE OF THESE MATERIALS ON YOUR SKIN OR IN YOUR EYES, FLUSH IT AWAY WITH A FLOW OF CLEAN WATER. IF YOU GET ONE OF THESE MATERIALS IN YOUR MOUTH, GET IMMEDIATE MEDICAL AID. IN GENERAL, THESE MATERIALS ARE POISONOUS, FLAMMABLE AND SKIN IRRITANTS.

CAUTION: DO ALL THE WORK ON A CLEAN, SOFT SURFACE TO PREVENT DAMAGE TO THE COMPONENTS.

CAUTION: MAKE SURE THAT ALL THE PARTS ARE CLEAN BEFORE YOU ASSEMBLE THEM.

SUB TASK 25-41-51-440-031-A01

D2549010514000 D2549010610200 D2549010611400 D2549020506200
D2549020506400 D2549020507000 D2549020701000 D2549030402400
D2549030404400 D2549030505400 D2549030506600 D2549030509400
D2549030513800 D2549030603800 D2549030607400 D2549030608800
D2549030611200 D2549030613200

1. Assembly of the Waste Water System (23B-1)

   (a) Attach the bracket 23B-050 with the screws 23B-060, the washers 23B-070 and the nuts 23B-080 to the lavatory structure.

   (b) Attach the drain valve 23B-040 with the screws 23B-090, the washers 23B-100 and the nuts 23B-110 to the bracket 23B-050.

   NOTE: For further instructions, see CMMV 38-30-30_U9084 (drain valve).

   (c) Attach the ground cable in accordance with the Process and Material Specification PMS 01-04-58 to the drain valve 23B-040.

   (d) Attach the hose 23B-120 with the clamps 23B-030 to the drain valve 23B-040 and to the lavatory structure.

   (e) Attach the hose 23B-120 with the clamps 23B-135, the spacers 23B-151, the screws 23B-210 and the washers 23B-175 to the lavatory structure.

   (f) Attach the drain assembly 23B-010 to the lavatory structure.

   NOTE: For further instructions, see CMMV 38-31-14_58568 (drain assembly).

   (g) Attach the hose 23B-020 with the clamps 23B-030 to the drain assembly 23B-010, to the lavatory structure and to the drain valve 23B-040.

SUB TASK 25-41-51-440-031-B01

D2547160900200 D2547160900400 D2549010400000 D2549010400200
D2549010400400 D2549010400600 D2549010400800 D2549010401000
D2549010401400 D2549010402200 D2549010402400 D2549010402600
D2549010402800 D2549010403000 D2549010403200 D2549010403600
D2549010404400 D2549010404600 D2549010404800 D2549010405000
D2549010405200 D2549010405400 D2549010405600 D2549010405800
D2549010406000 D2549010406200 D2549010406400 D2549010406800
D2549010407000 D2549010509400 D2549010509600 D2549010509800
D2549010510000 D2549010510200 D2549010510400 D2549010510600
D2549010510800 D2549010511000 D2549010511400 D2549010511600
D2549010511800 D2549010512000 D2549010512200 D2549010512400
D2549010512600 D2549010513000 D2549010513200 D2549010513400

D2549010513600 D2549010513800 D2549010514200 D2549010514400
D2549010514600 D2549010514800 D2549010600000 D2549010600200
D2549010600400 D2549010600600 D2549010600800 D2549010601000
D2549010601200 D2549010601400 D2549010601600 D2549010601800
D2549010602000 D2549010602200 D2549010602400 D2549010602600
D2549010602800 D2549010603000 D2549010603200 D2549010603400
D2549010603600 D2549010603800 D2549010604000 D2549010604200
D2549010604400 D2549010604600 D2549010604800 D2549010605000
D2549010605200 D2549010605600 D2549010605800 D2549010606000
D2549010606200 D2549010606400 D2549010606600 D2549010606800
D2549010607000 D2549010607200 D2549010607400 D2549010607600
D2549010607800 D2549010608200 D2549010608400 D2549010608600
D2549010608800 D2549010609000 D2549010609200 D2549010609400
D2549010609600 D2549010609800 D2549010610000 D2549010610600
D2549010610800 D2549010611000 D2549010611200 D2549010611600
D2549010611800 D2549010612000 D2549010612200 D2549010612400
D2549010612600 D2549010613200 D2549010613400 D2549010613600
D2549010613800 D2549010614200 D2549010614400 D2549010614800
D2549020300000 D2549020300400 D2549020300600 D2549020300800
D2549020301000 D2549020301600 D2549020301800 D2549020302800
D2549020400000 D2549020400400 D2549020400600 D2549020400800
D2549020401000 D2549020401200 D2549020401600 D2549020402000
D2549020402200 D2549020402400 D2549020403000 D2549020403200
D2549020403800 D2549020404000 D2549020404200 D2549020404400
D2549020404800 D2549020405000 D2549020405200 D2549020405400
D2549020405600 D2549020405800 D2549020406000 D2549020406200
D2549020406400 D2549020407000 D2549020407200 D2549020407400
D2549020407600 D2549020407800 D2549020408200 D2549020408800
D2549020409000 D2549020409600 D2549020410200 D2549020410800
D2549020411000 D2549020411200 D2549020411400 D2549020411600
D2549020412400 D2549020412800 D2549020413400 D2549020413600
D2549020413800 D2549020414000 D2549020414200 D2549020414600
D2549020414800 D2549020502200 D2549020505600 D2549020506600
D2549020506800 D2549020507200 D2549020507400 D2549020507600
D2549020507800 D2549020508000 D2549020508200 D2549020508400
D2549020508600 D2549020508800 D2549020509000 D2549020509200
D2549020509600 D2549020509800 D2549020510000 D2549020510400
D2549020510600 D2549020510800 D2549020511000 D2549020511200
D2549020511600 D2549020511800 D2549020512000 D2549020512200
D2549020512400 D2549020512600 D2549020512800 D2549020513000
D2549020513200 D2549020513400 D2549020513800 D2549020514000
D2549020514200 D2549020514400 D2549020514600 D2549020514800
D2549020602200 D2549020604200 D2549020604400 D2549020604600
D2549020604800 D2549020605000 D2549020605200 D2549020605400
D2549020605600 D2549020605800 D2549020606000 D2549020606800
D2549020607000 D2549020607400 D2549020607600 D2549020607800
D2549020608200 D2549020608400 D2549020608600 D2549020608800

D2549020609000 D2549020609200 D2549020609400 D2549020609600
D2549020609800 D2549020610000 D2549020610200 D2549020610400
D2549020610600 D2549020610800 D2549020611000 D2549020611200
D2549020611400 D2549020611600 D2549020611800 D2549020612000
D2549020612200 D2549020612400 D2549020612600 D2549020612800
D2549020613000 D2549020613200 D2549020613600 D2549020613800
D2549020614000 D2549020614400 D2549020614600 D2549020614800
D2549020700000 D2549020700200 D2549020700400 D2549020700600
D2549020700800 D2549020701200 D2549020701400 D2549020701600
D2549020701800 D2549020702000 D2549020702200 D2549020702400
D2549020702600 D2549020702800 D2549020703200 D2549020703400
D2549020703600 D2549020703800 D2549020704000 D2549020704200
D2549020704400 D2549020704600 D2549020704800 D2549020705000
D2549020705200 D2549020705400 D2549020705600 D2549020705800
D2549020706000 D2549020706200 D2549020706400 D2549020706600
D2549020706800 D2549020707000 D2549020707200 D2549020707400
D2549020707600 D2549020707800 D2549020708000 D2549020708200
D2549020708400 D2549020708600 D2549020708800 D2549020709000
D2549020709200 D2549020709400 D2549020709600 D2549020709800
D2549020710000 D2549020710200 D2549020710400 D2549020710600
D2549020710800 D2549020711000 D2549020711200 D2549020711400
D2549020711600 D2549020712200 D2549020712400 D2549020712800
D2549020713000 D2549020713200 D2549020713400 D2549020713600
D2549020713800 D2549020714000 D2549020714400 D2549020714600
D2549020800000 D2549020800200 D2549020800400 D2549020800600
D2549020801000 D2549020801200 D2549020801400 D2549020801600
D2549020802000 D2549020802200 D2549020802400 D2549020802600
D2549020802800 D2549020803000 D2549020803200 D2549020803400
D2549020803600 D2549020803800 D2549020804000 D2549020804200
D2549020804800 D2549020805000 D2549020805200 D2549020805400
D2549020805600 D2549020805800 D2549020806000 D2549020806200
D2549020806400 D2549020806600 D2549020806800 D2549020807200
D2549020807400 D2549020807600 D2549020807800 D2549020808400
D2549020808600 D2549020808800 D2549020809000 D2549020809400
D2549020809600 D2549020809800 D2549020810200 D2549020810800
D2549020811200 D2549020811600 D2549020811800 D2549020812000
D2549020812200 D2549020812800 D2549020813000 D2549020813200
D2549020813800 D2549020814000 D2549020814200 D2549020814400
D2549030400000 D2549030400200 D2549030400400 D2549030400600
D2549030401200 D2549030401400 D2549030401600 D2549030401800
D2549030402000 D2549030402200 D2549030402600 D2549030402800
D2549030403000 D2549030403400 D2549030403600 D2549030403800
D2549030404000 D2549030404200 D2549030404600 D2549030404800
D2549030405000 D2549030405200 D2549030405400 D2549030405600
D2549030405800 D2549030406400 D2549030406600 D2549030406800
D2549030407000 D2549030407200 D2549030407600 D2549030407800
D2549030408200 D2549030408400 D2549030408600 D2549030409000

D2549030409200 D2549030409400 D2549030409800 D2549030410000
D2549030410200 D2549030410400 D2549030411400 D2549030411600
D2549030411800 D2549030412200 D2549030413400 D2549030414000
D2549030414400 D2549030414600 D2549030414800 D2549030503800
D2549030504000 D2549030504200 D2549030504600 D2549030504800
D2549030505200 D2549030505600 D2549030505800 D2549030506000
D2549030506200 D2549030506400 D2549030506800 D2549030507000
D2549030507200 D2549030507400 D2549030507600 D2549030507800
D2549030508000 D2549030508200 D2549030508400 D2549030508600
D2549030508800 D2549030509000 D2549030509200 D2549030509600
D2549030509800 D2549030510000 D2549030510200 D2549030510400
D2549030510600 D2549030510800 D2549030511000 D2549030511200
D2549030511400 D2549030511600 D2549030511800 D2549030512000
D2549030512200 D2549030512400 D2549030512800 D2549030513000
D2549030513200 D2549030513400 D2549030513600 D2549030514000
D2549030514200 D2549030514400 D2549030514600 D2549030514800
D2549030600000 D2549030600200 D2549030600400 D2549030600600
D2549030600800 D2549030601000 D2549030601200 D2549030601400
D2549030601600 D2549030601800 D2549030602000 D2549030602200
D2549030602400 D2549030602600 D2549030602800 D2549030603000
D2549030603200 D2549030603400 D2549030603600 D2549030604200
D2549030604400 D2549030604600 D2549030604800 D2549030605000
D2549030605200 D2549030605400 D2549030605600 D2549030605800
D2549030606000 D2549030606200 D2549030606400 D2549030606600
D2549030606800 D2549030607000 D2549030607200 D2549030607600
D2549030607800 D2549030608000 D2549030608200 D2549030608400
D2549030608600 D2549030609000 D2549030609200 D2549030609800
D2549030610000 D2549030610200 D2549030610600 D2549030611000
D2549030611400 D2549030611600 D2549030611800 D2549030612000
D2549030612200 D2549030612400 D2549030612600 D2549030612800
D2549030613400 D2549030613600 D2549030613800 D2549030614000
D2549030614200 D2549030614400 D2549030614800 D2549030700000
D2549030700200 D2549030700400 D2549030700600 D2549030700800
D2549030701000 D2549030702200 D2549030702400 D2549030702600
D2549030702800 D2549030703000 D2549030703200 D2549030703400
D2549030703600 D2549030703800 D2549030704000 D2549030704400
D2549030704600 D2549030704800 D2549040500200 D2549040500400
D2549040500800 D2549040501000 D2549040501400 D2549040501800
D2549040502000 R225401107-004 R225401115-000 R225401134-002 R225401134-004
R225401134-006 R225401134-008 R225401134-010 R225401134-012 R225401134-014
R225401134-016 R225401134-018 R225401134-020 R225401134-022 R225401134-024
R225401134-026 R225401134-028 R225401134-030 R225401134-032 R225401134-034
R225401134-036 R225401134-038 R225401136-000 R225401136-004 R225401136-006
R225401136-008 R225401136-010 R225401136-014 R225401136-016 R225401136-018
R225401136-020 R225401136-022 R225401137-000 R225401137-002 R225401137-004
R225401137-006 R225401137-008 R225401137-010 R225401137-012 R225401137-014
R225401137-016 R225401142-000 R225401142-002 R225401145-002 R225401145-004

R225401145-006 R225401145-008 R225401145-010 R225401145-012 R225401145-014 R225401152-000 R225401152-002 R225401152-004 R225401152-006 R225401152-008 R225401152-010 R225401153-000 R225401159-000 R225401160-000 R225401160-002 R225401168-000 R225401168-002 R225401168-004 R225401168-006 R225401168-008 R225401168-010 R225401168-012 R225401168-014 R225401168-016 R225401168-018 R225401168-020 R225401168-022 R225401168-024 R225401168-026 R225401168-028 R225401172-000 R225401172-002 R225401172-004 R225401172-006 R225401172-008 R225401172-010 R225401172-012 R225401172-014 R225401172-016 R225401172-018 R225401175-000 R225401175-002 R225401176-000 R225401183-000 R225401183-002 R225401183-004 R225401183-006 R225401183-008 R225401192-000 R225401192-002 R225401195-000 R225401196-000 R225401196-002 R225401196-004 R225401196-006 R225401196-008 R225401196-010 R225401196-012 R225401196-014 R225401196-016 R225401196-020 R225401196-022 R225401196-024 R225401196-034 R225401196-036 R225401196-038 R225401196-040 R225401196-042 R225401196-044 R225401196-046 R225401196-048 R225401196-050 R225401196-052 R225401196-054 R225401196-056 R225401196-058 R225401196-060 R225401196-062 R225401196-066 R225401196-068 R225401196-070 R225401199-000 R225401199-002 R225401199-004 R225401199-006 R225401199-008 R225401600-000 R225401600-002 R225401600-004 R225401603-000 R225401605-000 R225401605-002 R225401611-006 R225401611-008 R225401611-010 R225401611-012 R225401611-018 R225401613-000 R225401614-000 R225401618-000 R225401618-002 R225401619-000 R225401619-002 R225401622-000 R225401622-002 R225401624-000 R225401625-000 R225401627-004 R225401629-000 R225401629-002 R225401639-000 R225401639-002 R225401643-000 R225401643-002 R225401648-000 R225401648-002 R225401648-004 R225401648-008 R225401649-000 R225401656-000 R225401656-002 R225401662-002 R225401671-000 R225401671-002 R225401673-002 R225401673-004 R225401673-006 R225401675-000 R225401676-000 R225401683-000 R225401685-000 R225401685-002 R225401691-002 R225401693-000 R225401697-000 R225401697-002 R225401803-000 R225401803-002 R225401811-000 R225401814-000

2. Assembly of the Waste Water System (23B-1)

   (a) Attach the bracket 23B-050 with the screws 23B-060, the washers 23B-070 and the nuts 23B-080 to the lavatory structure.

   (b) Attach the drain valve 23B-040 with the screws 23B-090, the washers 23B-100 and the nuts 23B-110 to the bracket 23B-050.

   NOTE: For further instructions, see CMMV 38-30-30_U9084 (drain valve).

   (c) Attach the ground cable in accordance with the Process and Material Specification PMS 01-04-58 to the drain valve 23B-040.

   (d) Attach the hose 23B-120 with the clamps 23B-030 to the drain valve 23B-040 and to the lavatory structure.

(e) Attach the hose 23B-120 with the clamps 23B-130, 23B-137, 23B-140, the spacers 23B-150, 23B-152, the screws 23B-160, 23B-162, 23B-164 and the washers 23B-170 to the lavatory structure.

(f) Attach the hose 23B-120 with the clamp 23B-130, the screw 23B-180, the washer 23B-170 and the nut 23B-190 to the lavatory structure.

(g) Attach the drain assembly 23B-010 to the lavatory structure.

NOTE: For further instructions, see CMMV 38-31-14_58568 (drain assembly).

(h) Attach the hose 23B-020 with the clamps 23B-030 to the drain assembly 23B-010, to the lavatory structure and to the drain valve 23B-040.

(i) Attach the insulations 23B-220, 23B-230 with the adhesive tape 23B-240.

TASK 25-41-51-400-803-D01
D2547161903000 D2549010502400 D2549010505600 D2549010506800 D2549010507800 D2549020600400 D2549020603000 D2549020603600 D2549020604000 D2549020606400 R225401128-000

32. Assembly of the Waste Water System

A. General

This task gives you the assembly procedures of the component.

B. Job Set-up Information

(1) Not applicable

C. Procedure

WARNING: BE CAREFUL WHEN YOU USE SOLVENTS/CLEANING AGENTS, SEALANTS AND OTHER MATERIALS. OBEY THE MATERIAL MANUFACTURER'S INSTRUCTIONS AND THE LOCAL REGULATIONS. MAKE SURE THAT THERE IS A GOOD FLOW OF AIR THROUGH THE WORK AREA. DO NOT BREATHE THE FUMES. DO NOT SMOKE. DO NOT USE THESE MATERIALS NEAR A FLAME, SPARKS OR SOURCES OF HEAT. USE PROTECTIVE CLOTHING, GOGGLES AND GLOVES. IF YOU GET ONE OF THESE MATERIALS ON YOUR SKIN OR IN YOUR EYES, FLUSH IT AWAY WITH A FLOW OF CLEAN WATER. IF YOU GET ONE OF THESE MATERIALS IN YOUR MOUTH, GET IMMEDIATE MEDICAL AID. IN GENERAL, THESE MATERIALS ARE POISONOUS, FLAMMABLE AND SKIN IRRITANTS.

CAUTION: DO ALL THE WORK ON A CLEAN, SOFT SURFACE TO PREVENT DAMAGE TO THE COMPONENTS.

CAUTION: MAKE SURE THAT ALL THE PARTS ARE CLEAN BEFORE YOU ASSEMBLE THEM.

SUB TASK 25-41-51-440-032-A01

1. Assembly of the Waste Water System (23C-1)

(a) Attach the bracket 23C-050 with the screws 23C-060, the washers 23C-070 and the nuts 23C-080 to the lavatory structure.

(b) Attach the drain valve 23C-040 with the screws 23C-090, the washers 23C-100 and the nuts 23C-110 to the bracket 23C-050.

NOTE: For further instructions, see CMMV 38-30-30_U9084 (drain valve).

(c) Attach the ground cable in accordance with the Process and Material Specification PMS 01-04-58 to the drain valve 23C-040.

(d) Attach the hose 23C-160 with the clamps 23C-030, 23C-130 to the tube 23C-170 and to the drain valve 23C-040.

(e) Attach the tube 23C-170 with the clamps 23C-140, the spacers 23C-180, the screws 23C-190 and the washers 23C-150 to the lavatory structure.

(f) Attach the tube 23C-170 with the clamps 23C-130 to the lavatory structure.

(g) Attach the drain assembly 23C-010 to the lavatory structure.

NOTE: For further instructions, see CMMV 38-31-14_58568 (drain assembly).

(h) Attach the hose 23C-020 with the clamps 23C-030, 23C-120 to the drain assembly 23C-010, to the lavatory structure and to the drain valve 23C-040.

TASK 25-41-51-400-803-E01

D2549010401600 D2549010401800 D2549010402000 D2549010403400 D2549010403800
D2549010404000 D2549010404200 D2549010610400 D2549010613000 D2549010614600
D2549020302000 D2549020400200 D2549020401400 D2549020402600 D2549020403400
D2549020403600 D2549020404600 D2549020406600 D2549020406800 D2549020408000
D2549020408600 D2549020409200 D2549020409400 D2549020409800 D2549020410400
D2549020410600 D2549020411800 D2549020412000 D2549020412200 D2549020412600
D2549020413000 D2549020413200 D2549020513600 D2549020712600 D2549020800800
D2549020801800 D2549020804400 D2549020807000 D2549020808200 D2549020810000
D2549020810400 D2549020810600 D2549020811400 D2549020812400 D2549020812600
D2549020813400 D2549020813600 D2549020814600 D2549020814800 D2549030401000
D2549030406000 D2549030407400 D2549030408000 D2549030409600 D2549030410600
D2549030410800 D2549030411200 D2549030412000 D2549030412400 D2549030412600
D2549030412800 D2549030413000 D2549030413200 D2549030413600 D2549030414200
D2549030610400 D2549030614600 D2549030701200 D2549030701400 D2549030701600
D2549030701800 D2549030702000 D2549030704200 D2549030705200 D2549030705600
D2549040500600 D2549040501200 D2549040501600 R225401136-012 R225401136-024
R225401196-018 R225401196-064 R225401199-010 R225401199-012 R225401602-000
R225401609-000 R225401611-000 R225401611-014 R225401611-016 R225401611-020
R225401627-000 R225401627-002 R225401643-004 R225401643-006 R225401643-008
R225401646-000 R225401646-002 R225401647-000 R225401648-006 R225401658-000
R225401662-000 R225401673-000 R225401688-000 R225401689-004 R225401689-006
R225401691-000 R225401808-000

33. Assembly of the Waste Water System

A. General

This task gives you the assembly procedures of the component.

B. Job Set-up Information

(1) Not applicable

C. Procedure

WARNING: **BE CAREFUL WHEN YOU USE SOLVENTS/CLEANING AGENTS, SEALANTS AND OTHER MATERIALS. OBEY THE MATERIAL MANUFACTURER'S INSTRUCTIONS AND THE LOCAL REGULATIONS. MAKE SURE THAT THERE IS A GOOD FLOW OF AIR THROUGH THE WORK AREA. DO NOT BREATHE THE FUMES. DO NOT SMOKE. DO NOT USE THESE MATERIALS NEAR A FLAME, SPARKS OR SOURCES OF HEAT. USE PROTECTIVE CLOTHING, GOGGLES AND GLOVES. IF YOU GET ONE OF THESE MATERIALS ON YOUR SKIN OR IN YOUR EYES, FLUSH IT AWAY WITH A FLOW OF CLEAN WATER. IF YOU GET ONE OF THESE MATERIALS IN YOUR MOUTH, GET IMMEDIATE MEDICAL AID. IN GENERAL, THESE MATERIALS ARE POISONOUS, FLAMMABLE AND SKIN IRRITANTS.**

CAUTION: **DO ALL THE WORK ON A CLEAN, SOFT SURFACE TO PREVENT DAMAGE TO THE COMPONENTS.**

CAUTION: **MAKE SURE THAT ALL THE PARTS ARE CLEAN BEFORE YOU ASSEMBLE THEM.**

SUB TASK 25-41-51-440-033-A01

1. Assembly of the Waste Water System (23D-1)

   (a) Attach the bracket 23D-050 with the screws 23D-060, the washers 23D-070 and the nuts 23D-080 to the lavatory structure.

   (b) Attach the drain valve 23D-040 with the screws 23D-090, the washers 23D-100 and the nuts 23D-110 to the bracket 23D-050.

   NOTE: **For further instructions, see CMMV 38-30-30_U9084 (drain valve).**

   (c) Attach the ground cable in accordance with the Process and Material Specification PMS 01-04-58 to the drain valve 23D-040.

   (d) Attach the hose 23D-120 with the clamp 23D-030 to the drain valve 23D-040.

   (e) Attach the hose 23D-120 with the clamp 23D-130, the screw 23D-180, the washer 23D-170 and the nut 23D-190 to the lavatory structure.

   (f) Attach the hose 23D-120 with the clamps 23D-130, 23D-135, 23D-140, the spacers 23D-150, 23D-155, the screws 23D-160, 23D-162, 23D-164 and the washers 23D-170 to the lavatory structure.

   (g) Attach the hose 23D-120 with the clamp 23D-030 to the lavatory structure.

(h) Attach the drain assembly 23D-010 to the lavatory structure.

NOTE: For further instructions, see CMMV 38-31-14_58568 (drain assembly).

(i) Attach the hose 23D-020 with the clamps 23D-030 to the drain assembly 23D-010, to the lavatory structure and to the drain valve 23D-040.

(j) Attach the insulations 23D-200, 23D-210, 23D-220 with the adhesive tape 23D-230.

TASK 25-41-51-400-803-F01
D2549020712000

34. Assembly of the Waste Water System

A. General

- Not applicable

B. Procedure

SUB TASK 25-41-51-000-131-A01
1. Assembly of the Waste Water System

(a) Not applicable.

TASK 25-41-51-400-804-A01

D2549010500000 D2549010500400 D2549010500600 D2549010500800 D2549010501000 D2549010501200 D2549010501400 D2549010501600 D2549010501800 D2549010502000 D2549010502200 D2549010502400 D2549010502600 D2549010502800 D2549010503200 D2549010503400 D2549010503600 D2549010503800 D2549010504200 D2549010504400 D2549010504600 D2549010504800 D2549010505000 D2549010505200 D2549010505400 D2549010505600 D2549010505800 D2549010506000 D2549010506200 D2549010506400 D2549010506800 D2549010507000 D2549010507200 D2549010507400 D2549010507600 D2549010507800 D2549010508200 D2549010508400 D2549010508600 D2549010508800 D2549010509000 D2549010509200 D2549010511200 D2549020500200 D2549020500400 D2549020500800 D2549020501200 D2549020501600 D2549020501800 D2549020502000 D2549020502400 D2549020502600 D2549020503000 D2549020503400 D2549020503600 D2549020503800 D2549020504000 D2549020504200 D2549020504400 D2549020504600 D2549020505000 D2549020505400 D2549020505800 D2549020600000 D2549020600200 D2549020600400 D2549020600800 D2549020601000 D2549020601200 D2549020601400 D2549020601600 D2549020601800 D2549020602000 D2549020602400 D2549020602600 D2549020602800 D2549020603000 D2549020603200 D2549020603400 D2549020603800 D2549020606400 D2549020606600 D2549020607200 D2549030500200 D2549030500400 D2549030500600 D2549030500800 D2549030501000 D2549030501200 D2549030501400 D2549030501600 D2549030502000 D2549030502200 D2549030502600 D2549030502800 D2549030503000 D2549030503200 D2549030503400 D2549030503600 R225401107-000 R225401107-002 R225401115-002 R225401128-000 R225401133-000 R225401134-000 R225401139-000 R225401145-000 R225401146-000 R225401146-002 R225401188-000 R225401188-002 R225401188-004 R225401188-006

35. Assembly of the Potable Water System

A. General

This task gives you the installation and assembly procedures of the component.

B. Job Set-up Information

(1) Not applicable

C. Procedure

WARNING: **BE CAREFUL WHEN YOU USE SOLVENTS/CLEANING AGENTS, SEALANTS AND OTHER MATERIALS. OBEY THE MATERIAL MANUFACTURER'S INSTRUCTIONS AND THE LOCAL REGULATIONS. MAKE SURE THAT THERE IS A GOOD FLOW OF AIR THROUGH THE WORK AREA. DO NOT BREATHE THE FUMES. DO NOT SMOKE. DO NOT USE THESE MATERIALS NEAR A FLAME, SPARKS OR SOURCES OF HEAT. USE PROTECTIVE CLOTHING, GOGGLES AND GLOVES. IF YOU GET ONE OF THESE MATERIALS ON YOUR SKIN OR IN YOUR EYES, FLUSH IT AWAY WITH A FLOW OF CLEAN WATER. IF YOU GET ONE OF THESE MATERIALS IN YOUR MOUTH, GET IMMEDIATE MEDICAL AID. IN GENERAL, THESE MATERIALS ARE POISONOUS, FLAMMABLE AND SKIN IRRITANTS.**

CAUTION: **DO ALL THE WORK ON A CLEAN, SOFT SURFACE TO PREVENT DAMAGE TO THE COMPONENTS.**

CAUTION: **MAKE SURE THAT ALL THE PARTS ARE CLEAN BEFORE YOU ASSEMBLE THEM.**

SUB TASK 25-41-51-440-035-A01

D2549020504000 D2549020602800 D2549020603400 D2549030500800 D2549030502000 D2549030502800 R225401134-000 R225401188-004

1. Assembly of the Potable Water System (22-1)

   (a) Attach the bracket 22-200 with the screws 22-071 and the washers 22-080 to the spacer 22-270.

   (b) Attach the shutoff valve 22-180 with the screws 22-191, 22-193, the washers 22-192 and the nuts 22-190, 22-194 to the bracket 22-200.

   (c) Attach the ground cable in accordance with the Process and Material Specification PMS 01-04-58 to the shutoff valve 22-180.

   (d) Attach the tee 22-160 to the shutoff valve 22-180.

   (e) Attach the tube 22-210 to the shutoff valve 22-180.

   (f) Attach the tube 22-210 and the clamp 22-250 with the spacer 22-240, the screw 22-260 and the washer 22-085.

   (g) Attach the brackets 22-120 with the screws 22-070 and the washers 22-080 to the lavatory structure.

   (h) Attach the water heater 22-110 with the clamps 22-130 to the brackets 22-120.

(i) Attach the ground cable in accordance with the Process and Material Specification PMS 01-04-58 to the water heater 22-110.

(j) Attach the hose 22-100 to the water heater 22-110.

(k) Attach the tee 22-140 to the water heater 22-110.

NOTE: For further instructions, see CMMV 38-12-18_0AJJ0 (water heater).

NOTE: For further instructions, see CMMV 38-12-16_0AJJ0 (water heater).

(l) Attach the tube 22-090 to the tee 22-140.

(m) Attach the tube 22-150 to the tees 22-140, 22-160.

(n) Attach the hose 22-170 to the tee 22-160.

(o) Attach the water faucet angles 22-040, 22-045 with the screws 22-070 and the washers 22-080 to the lavatory structure.

(p) Attach the tube 22-090, the hose 22-100 and the water faucet 22-010 with the washers 22-050 and the nuts 22-060 to the water faucet angles 22-040, 22-045.

(q) Attach the water faucet 22-010 with the washers 22-020 and the nuts 22-030.

(r) Attach the ground cable in accordance with the Process and Material Specification PMS 01-04-58 to the water faucet 22-010.

(s) Connect the water faucet 22-010 to the water supply.

NOTE: For further instructions, see CMMV 38-11-02_C3207 (water faucet).

SUB TASK 25-41-51-440-035-B01
D2549020601400 D2549020601600 R225401133-000

2. Assembly of the Potable Water System (22-1)

(a) Attach the bracket 22-200 with the screws 22-071 and the washers 22-080 to the floor pan.

(b) Attach the shutoff valve 22-180 with the screws 22-191, 22-193, the washers 22-192 and the nuts 22-190, 22-194 to the bracket 22-200.

(c) Attach the ground cable in accordance with the Process and Material Specification PMS 01-04-58 to the shutoff valve 22-180.

(d) Attach the tee 22-160 to the shutoff valve 22-180.

(e) Attach the tube 22-210 to the shutoff valve 22-180.

(f) Attach the tube 22-210 and the clamp 22-250 with the spacers 22-240, 22-242, the screw 22-260 and the washer 22-085.

(g) Attach the brackets 22-120 with the screws 22-070 and the washers 22-080 to the lavatory structure.

(h) Attach the water heater 22-110 with the clamps 22-130 to the brackets 22-120.

(i) Attach the ground cable in accordance with the Process and Material Specification PMS 01-04-58 to the water heater 22-110.

(j) Attach the hose 22-100 to the water heater 22-110.

(k) Attach the tee 22-140 to the water heater 22-110.

NOTE: For further instructions, see CMMV 38-12-18_0AJJ0 (water heater).

NOTE: For further instructions, see CMMV 38-12-16_0AJJ0 (water heater).

(l) Attach the tube 22-090 to the tee 22-140.

(m) Attach the tube 22-150 to the tees 22-140, 22-160.

(n) Attach the hose 22-170 to the tee 22-160.

(o) Attach the water faucet angles 22-040, 22-045 with the screws 22-070 and the washers 22-080 to the lavatory structure.

(p) Attach the tube 22-090, the hose 22-100 and the water faucet 22-010 with the washers 22-050 and the nuts 22-060 to the water faucet angles 22-040, 22-045.

(q) Attach the water faucet 22-010 with the washers 22-020 and the nuts 22-030.

(r) Attach the ground cable in accordance with the Process and Material Specification PMS 01-04-58 to the water faucet 22-010.

(s) Connect the water faucet 22-010 to the water supply.

NOTE: For further instructions, see CMMV 38-11-02_C3207 (water faucet).

SUB TASK 25-41-51-440-035-C01

D2549010500000 D2549010500400 D2549010500600 D2549010500800 D2549010501000 D2549010501200 D2549010501400 D2549010501600 D2549010501800 D2549010502000 D2549010502200 D2549010502400 D2549010502600 D2549010502800 D2549010503200 D2549010503400 D2549010503600 D2549010503800 D2549010504200 D2549010504400 D2549010504600 D2549010504800 D2549010505000 D2549010505200 D2549010505400 D2549010505600 D2549010505800 D2549010506000 D2549010506200 D2549010506400 D2549010506800 D2549010507000 D2549010507200 D2549010507400 D2549010507600 D2549010507800 D2549010508200 D2549010508400 D2549010508600 D2549010508800 D2549010509000 D2549010509200 D2549010511200 D2549020500200 D2549020500400 D2549020500800 D2549020501200 D2549020501600 D2549020501800 D2549020502000 D2549020502400 D2549020502600 D2549020503000 D2549020503400 D2549020503600 D2549020503800 D2549020504200 D2549020504400 D2549020504600 D2549020505000 D2549020505400 D2549020505800 D2549020600000 D2549020600200 D2549020600400 D2549020600800 D2549020601000 D2549020601200 D2549020601800 D2549020602000 D2549020602400 D2549020602600 D2549020603000 D2549020603200 D2549020603800 D2549020606400 D2549020606600 D2549020607200 D2549030500200 D2549030500400 D2549030500600 D2549030501000 D2549030501200 D2549030501400 D2549030501600 D2549030502200 D2549030502600 D2549030503000 D2549030503200 D2549030503400 D2549030503600 R225401107-000 R225401107-002 R225401115-002 R225401128-000 R225401139-000 R225401145-000 R225401146-000 R225401146-002 R225401188-000 R225401188-002 R225401188-006

3. Assembly of the Potable Water System (22-1)

(a) Attach the bracket 22-200 with the screws 22-071 and the washers 22-080 to the floor pan.

(b) Attach the shutoff valve 22-180 with the screws 22-191, 22-193, the washers 22-192 and the nuts 22-190, 22-194 to the bracket 22-200.

(c) Attach the ground cable in accordance with the Process and Material Specification PMS 01-04-58 to the shutoff valve 22-180.

(d) Attach the tee 22-160 to the shutoff valve 22-180.

(e) Attach the tube 22-210 to the shutoff valve 22-180.

(f) Attach the brackets 22-120 with the screws 22-070 and the washers 22-080 to the lavatory structure.

(g) Attach the water heater 22-110 with the clamps 22-130 to the brackets 22-120.

(h) Attach the ground cable in accordance with the Process and Material Specification PMS 01-04-58 to the water heater 22-110.

(i) Attach the hose 22-100 to the water heater 22-110.

(j) Attach the tee 22-140 to the water heater 22-110.

NOTE: For further instructions, see CMMV 38-12-18_0AJJ0 (water heater).

NOTE: For further instructions, see CMMV 38-12-16_0AJJ0 (water heater).

(k) Attach the elbow 22-105 to the water heater 22-010.

(l) Attach the tube 22-090 to the tee 22-140.

(m) Attach the tube 22-150 to the tees 22-140, 22-160.

(n) Attach the hose 22-170 to the tee 22-160.

(o) Attach the water faucet angles 22-040, 22-045 with the screws 22-070 and the washers 22-080 to the lavatory structure.

(p) Attach the tube 22-090, the hose 22-100 and the water faucet 22-010 with the washers 22-050 and the nuts 22-060 to the water faucet angles 22-040, 22-045.

(q) Attach the clamps 22-086, the spacers 22-092 with the screws 22-087, 22-088 and the washers 22-089.

(r) Attach the water faucet 22-010 with the washers 22-020 and the nuts 22-030.

(s) Attach the ground cable in accordance with the Process and Material Specification PMS 01-04-58 to the water faucet 22-010.

(t) Connect the water faucet 22-010 to the water supply.

NOTE: For further instructions, see CMMV 38-11-02_C3207 (water faucet).

TASK 25-41-51-400-804-B01
D2549020500000 D2549020500600 D2549020501000 D2549020501400 D2549020502800 D2549020503200 D2549020504800 D2549020505200 D2549020506000 D2549030501800 D2549030502400

36. Assembly of the Potable Water System

A. General

This task gives you the installation and assembly procedures of the component.

B. Job Set-up Information

(1) Not applicable

C. Procedure

WARNING: BE CAREFUL WHEN YOU USE SOLVENTS/CLEANING AGENTS, SEALANTS AND OTHER MATERIALS. OBEY THE MATERIAL MANUFACTURER'S INSTRUCTIONS AND THE LOCAL REGULATIONS. MAKE SURE THAT THERE IS A GOOD FLOW OF AIR THROUGH THE WORK AREA. DO NOT BREATHE THE FUMES. DO NOT SMOKE. DO NOT USE THESE MATERIALS NEAR A FLAME, SPARKS OR SOURCES OF HEAT. USE PROTECTIVE CLOTHING, GOGGLES AND GLOVES. IF YOU GET ONE OF THESE MATERIALS ON YOUR SKIN OR IN YOUR EYES, FLUSH IT AWAY WITH A FLOW OF CLEAN WATER. IF YOU GET ONE OF THESE MATERIALS IN YOUR MOUTH, GET IMMEDIATE MEDICAL AID. IN GENERAL, THESE MATERIALS ARE POISONOUS, FLAMMABLE AND SKIN IRRITANTS.

CAUTION: DO ALL THE WORK ON A CLEAN, SOFT SURFACE TO PREVENT DAMAGE TO THE COMPONENTS.

CAUTION: MAKE SURE THAT ALL THE PARTS ARE CLEAN BEFORE YOU ASSEMBLE THEM.

SUB TASK 25-41-51-440-036-A01

1. Assembly of the Potable Water System (22A-1)

(a) Attach the bracket 22A-180 with the screws 22A-070 and the washers 22A-080 to the floor pan.

(b) Attach the shutoff valve 22A-160 with the screws 22A-184, 22A-186, the washers 22A-185 and the nuts 22A-170, 22A-187 to the bracket 22A-180.

(c) Attach the ground cable in accordance with the Process and Material Specification PMS 01-04-58 to the shutoff valve 22A-160.

(d) Attach the tee 22A-310 to the shutoff valve 22A-160.

(e) Attach the brackets 22A-120 with the screws 22A-070 and the washers 22A-080 to the lavatory structure.

(f) Attach the water heater 22A-110 with the clamps 22A-130 to the brackets 22A-120.

(g) Attach the ground cable in accordance with the Process and Material Specification PMS 01-04-58 to the water heater 22A-110.

(h) Attach the drinking water filter assembly 22A-190 with the screws 22A-070 and the washers 22A-080 to the lavatory structure.

(i) Attach the ground cable in accordance with the Process and Material Specification PMS 01-04-58 to the drinking water filter assembly 22A-190.

(j) Attach the tubes 22A-200, 22A-220 to the drinking water filter assembly 22A-190.

NOTE: For further instructions, see CMMV 38-12-23_61372 (drinking water filter assembly).

(k) Attach the tee 22A-260 to the water heater 22A-110.

(l) Attach the tee 22A-260 to the tube 22A-220.

(m) Attach the nonreturn valve 22A-270 to the tee 22A-260.

(n) Attach the tube 22A-230 to the tee 22A-260.

(o) Attach the hose 22A-100 to the water heater 22A-110.

NOTE: For further instructions, see CMMV 38-12-16_0AJJ0 (water heater).

(p) Attach the tube 22A-090 to the tee 22A-260.

(q) Attach the tee 22A-250 to the tube 22A-200.

(r) Attach the tube 22A-240 and the clamp 22A-300 with the spacer 22A-290, the screw 22A-280 and the washer 22A-080 to the tee 22A-250 and to the nonreturn valve 22A-270.

NOTE: For further instructions, see CMMV 38-10-15_U9084 (nonreturn valve).

(s) Attach the ground cable in accordance with the Process and Material Specification PMS 01-04-58 to the nonreturn valve 22A-270.

(t) Attach the tube 22A-210 to the tees 22A-250, 22A-310.

(u) Attach the tube 22A-140 to the shutoff valve 22A-160.

(v) Attach the hose 22A-150 to the tee 22A-310.

(w) Attach the water faucet angles 22A-040 with the screws 22A-070 and the washers 22A-080 to the lavatory structure.

(x) Attach the tube 22A-090, the hose 22A-100 and the water faucet 22A-010 with the washers 22A-050 and the nuts 22A-060 to the water faucet angles 22A-040.

(y) Attach the water faucet 22A-010 with the washers 22A-020 and the nuts 22A-030.

(z) Attach the ground cable in accordance with the Process and Material Specification PMS 01-04-58 to the water faucet 22A-010.

(aa) Connect the water faucet 22A-010 to the water supply.

NOTE: For further instructions, see CMMV 38-11-02_C3207 (water faucet).

TASK 25-41-51-400-804-C01
D2549020603600 D2549020604000

37. Assembly of the Potable Water System

A. General

This task gives you the installation and assembly procedures of the component.

B. Job Set-up Information

(1) Not applicable

C. Procedure

WARNING: **BE CAREFUL WHEN YOU USE SOLVENTS/CLEANING AGENTS, SEALANTS AND OTHER MATERIALS. OBEY THE MATERIAL MANUFACTURER'S INSTRUCTIONS AND THE LOCAL REGULATIONS. MAKE SURE THAT THERE IS A GOOD FLOW OF AIR THROUGH THE WORK AREA. DO NOT BREATHE THE FUMES. DO NOT SMOKE. DO NOT USE THESE MATERIALS NEAR A FLAME, SPARKS OR SOURCES OF HEAT. USE PROTECTIVE CLOTHING, GOGGLES AND GLOVES. IF YOU GET ONE OF THESE MATERIALS ON YOUR SKIN OR IN YOUR EYES, FLUSH IT AWAY WITH A FLOW OF CLEAN WATER. IF YOU GET ONE OF THESE MATERIALS IN YOUR MOUTH, GET IMMEDIATE MEDICAL AID. IN GENERAL, THESE MATERIALS ARE POISONOUS, FLAMMABLE AND SKIN IRRITANTS.**

CAUTION: **DO ALL THE WORK ON A CLEAN, SOFT SURFACE TO PREVENT DAMAGE TO THE COMPONENTS.**

CAUTION: **MAKE SURE THAT ALL THE PARTS ARE CLEAN BEFORE YOU ASSEMBLE THEM.**

SUB TASK 25-41-51-440-037-A01

1. Assembly of the Potable Water System (22B-1)

(a) Attach the bracket 22B-250 with the screws 22B-080 and the washers 22B-090 to the floor pan.

(b) Attach the shutoff valve 22B-190 with the screws 22B-210, 22B-230, the washers 22B-220 and the nuts 22B-200, 22B-240 to the bracket 22B-250.

(c) Attach the ground cable in accordance with the Process and Material Specification PMS 01-04-58 to the shutoff valve 22B-190.

(d) Attach the tee 22B-170 to the shutoff valve 22B-190.

(e) Attach the tube 22B-260 to the shutoff valve 22B-190.

(f) Attach the brackets 22B-130 with the screws 22B-070 and the washers 22B-090 to the lavatory structure.

(g) Attach the water heater 22B-120 with the clamps 22B-140 to the brackets 22B-130.

(h) Attach the ground cable in accordance with the Process and Material Specification PMS 01-04-58 to the water heater 22B-120.

(i) Attach the hose 22B-110 to the water heater 22B-120.

(j) Attach the tee 22B-150 to the water heater 22B-120.

NOTE: For further instructions, see CMMV 38-12-16_0AJJ0 (water heater).

(k) Attach the tube 22B-100 to the tee 22B-150.

(l) Attach the tube 22B-160 to the tees 22B-150, 22B-170.

(m) Attach the hose 22B-180 to the tee 22B-170.

(n) Attach the water faucet angles 22B-040 with the screws 22B-070 and the washers 22B-090 to the lavatory structure.

(o) Attach the tube 22B-100, the hose 22B-110 and the water faucet 22B-010 with the washers 22B-050 and the nuts 22B-060 to the water faucet angles 22B-040.

(p) Attach the water faucet 22B-010 with the washers 22B-020 and the nuts 22B-030.

(q) Attach the ground cable in accordance with the Process and Material Specification PMS 01-04-58 to the water faucet 22B-010.

(r) Connect the water faucet 22B-010 to the water supply.

NOTE: For further instructions, see CMMV 38-11-02_C3207 (water faucet).

TASK 25-41-51-400-804-D01
D2549010508000

38. Assembly of the Potable Water System

A. General

This task gives you the installation and assembly procedures of the component.

B. Job Set-up Information

(1) Not applicable

C. Procedure

WARNING: BE CAREFUL WHEN YOU USE SOLVENTS/CLEANING AGENTS, SEALANTS AND OTHER MATERIALS. OBEY THE MATERIAL MANUFACTURER'S INSTRUCTIONS AND THE LOCAL REGULATIONS. MAKE SURE THAT THERE IS A GOOD FLOW OF AIR THROUGH THE WORK AREA. DO NOT BREATHE THE FUMES. DO NOT SMOKE. DO NOT USE THESE MATERIALS NEAR A FLAME, SPARKS OR SOURCES OF HEAT. USE PROTECTIVE CLOTHING, GOGGLES AND GLOVES. IF YOU GET ONE OF THESE MATERIALS ON YOUR SKIN OR IN YOUR EYES, FLUSH IT AWAY WITH A FLOW OF CLEAN WATER. IF YOU GET ONE OF THESE MATERIALS IN YOUR MOUTH, GET IMMEDIATE MEDICAL AID. IN GENERAL, THESE MATERIALS ARE POISONOUS, FLAMMABLE AND SKIN IRRITANTS.

CAUTION: DO ALL THE WORK ON A CLEAN, SOFT SURFACE TO PREVENT DAMAGE TO THE COMPONENTS.

CAUTION: MAKE SURE THAT ALL THE PARTS ARE CLEAN BEFORE YOU ASSEMBLE THEM.

SUB TASK 25-41-51-440-038-A01

1. Assembly of the Potable Water System (22C-1)

(a) Attach the shutoff cock bracket 22C-190 with the screws 22C-250 and the washers 22C-130 to the floor pan.

(b) Attach the shutoff valve 22C-180 with the screws 22C-200, 22C-230, the washers 22C-210, 22C-240 and the nuts 22C-220, 22C-260 to the shutoff cock bracket 22C-190.

(c) Attach the ground cable in accordance with the Process and Material Specification PMS 01-04-58 to the shutoff valve 22C-180.

(d) Attach the brackets 22C-140 with the screws 22C-150 and the washers 22C-130 to the lavatory structure.

(e) Attach the water heater 22C-050 with the clamps 22C-160 to the brackets 22C-140.

(f) Attach the ground cable in accordance with the Process and Material Specification PMS 01-04-58 to the water heater 22C-050.

(g) Attach the tube 22C-270 to the shutoff valve 22C-180.

(h) Attach the tee 22C-170 to the shutoff valve 22C-180.

(i) Attach the tee 22C-070 to the water heater 22C-050.

(j) Attach the tube 22C-080 to the tees 22C-070, 22C-170.

(k) Attach the hose 22C-090 to the tee 22C-170.

(l) Attach the hose 22C-040 to the water heater 22C-050.

NOTE: For further instructions, see CMMV 38-12-16_0AJJ0 (water heater).

(m) Attach the hose 22C-060 to the tee 22C-070.

(n) Attach the hose 22C-060 and the clamps 22C-100 with the spacers 22C-110, the screws 22C-120 and the washers 22C-130.

(o) Attach the infrared faucet assembly 22C-010 with the washers 22C-020 and the nuts 22C-030.

(p) Attach the ground cable in accordance with the Process and Material Specification PMS 01-04-58 to the infrared faucet assembly 22C-010.

(q) Connect the infrared faucet assembly 22C-010 to the water supply and to the electrical supply.

NOTE: For further instructions, see CMMV 38-20-20_80477 (infrared faucet assembly).

TASK 25-41-51-400-804-E01

D2547160900200 D2547160900400 D2549010400000 D2549010400200 D2549010400400
D2549010400600 D2549010400800 D2549010401000 D2549010401400 D2549010401800
D2549010402000 D2549010402200 D2549010402400 D2549010402600 D2549010402800
D2549010403000 D2549010403400 D2549010403600 D2549010403800 D2549010404200
D2549010404400 D2549010405000 D2549010405200 D2549010405600 D2549010405800
D2549010406000 D2549010406200 D2549010406400 D2549010406800 D2549010407000
D2549010509400 D2549010509600 D2549010509800 D2549010510000 D2549010510200
D2549010510600 D2549010510800 D2549010511000 D2549010511400 D2549010511600
D2549010511800 D2549010512000 D2549010512200 D2549010512400 D2549010512600
D2549010513000 D2549010513200 D2549010513400 D2549010513800 D2549010514200
D2549010514400 D2549010514600 D2549010514800 D2549010600000 D2549010600200
D2549010600400 D2549010600600 D2549010600800 D2549010601000 D2549010601600
D2549010601800 D2549010602000 D2549010602200 D2549010602400 D2549010602600
D2549010602800 D2549010603000 D2549010603400 D2549010603600 D2549010603800
D2549010604000 D2549010604200 D2549010604400 D2549010604600 D2549010605000
D2549010605200 D2549010605600 D2549010605800 D2549010606000 D2549010606200
D2549010606600 D2549010607200 D2549010607600 D2549010608200 D2549010608400
D2549010608800 D2549010609200 D2549010609600 D2549010609800 D2549010610000
D2549010610400 D2549010610800 D2549010611000 D2549010611200 D2549010611800
D2549010612400 D2549010612600 D2549010613000 D2549010613200 D2549010613400
D2549010613800 D2549010614200 D2549010614600 D2549020300000 D2549020300400
D2549020300600 D2549020300800 D2549020301000 D2549020301600 D2549020301800
D2549020302000 D2549020302800 D2549020400000 D2549020400200 D2549020400400
D2549020400600 D2549020400800 D2549020401000 D2549020401200 D2549020401400
D2549020401600 D2549020402000 D2549020402600 D2549020403200 D2549020403400
D2549020403600 D2549020403800 D2549020404000 D2549020404400 D2549020404600
D2549020404800 D2549020405000 D2549020405200 D2549020405400 D2549020405600
D2549020406200 D2549020406400 D2549020406600 D2549020406800 D2549020407000
D2549020407400 D2549020407600 D2549020407800 D2549020408000 D2549020408200
D2549020408600 D2549020409000 D2549020409200 D2549020409400 D2549020409600
D2549020409800 D2549020410200 D2549020410400 D2549020410600 D2549020410800
D2549020411000 D2549020411200 D2549020411400 D2549020411600 D2549020411800
D2549020412000 D2549020412200 D2549020412400 D2549020412600 D2549020413000
D2549020413200 D2549020413400 D2549020413600 D2549020413800 D2549020414000
D2549020414200 D2549020414600 D2549020414800 D2549020502200 D2549020505600
D2549020506600 D2549020506800 D2549020507400 D2549020507600 D2549020507800
D2549020508000 D2549020508200 D2549020508400 D2549020508600 D2549020508800
D2549020509000 D2549020509200 D2549020509600 D2549020509800 D2549020510000
D2549020510600 D2549020510800 D2549020511000 D2549020511200 D2549020511600
D2549020511800 D2549020512000 D2549020512200 D2549020512400 D2549020512600
D2549020513000 D2549020513200 D2549020513400 D2549020513600 D2549020513800
D2549020514000 D2549020514200 D2549020514400 D2549020514600 D2549020514800
D2549020602200 D2549020604200 D2549020604400 D2549020604600 D2549020604800
D2549020605000 D2549020605200 D2549020605400 D2549020605800 D2549020606000
D2549020606800 D2549020607000 D2549020607400 D2549020607600 D2549020607800
D2549020608400 D2549020608600 D2549020608800 D2549020609000 D2549020609400

D2549020609600 D2549020609800 D2549020610000 D2549020610200 D2549020610400
D2549020610600 D2549020610800 D2549020611000 D2549020611200 D2549020611400
D2549020611600 D2549020611800 D2549020612200 D2549020612400 D2549020612600
D2549020612800 D2549020613000 D2549020613200 D2549020613800 D2549020614000
D2549020614400 D2549020614600 D2549020614800 D2549020700000 D2549020700200
D2549020700400 D2549020700600 D2549020700800 D2549020701400 D2549020701600
D2549020701800 D2549020702000 D2549020702200 D2549020702400 D2549020702600
D2549020702800 D2549020703200 D2549020703400 D2549020703600 D2549020703800
D2549020704000 D2549020704200 D2549020704400 D2549020704800 D2549020705000
D2549020705200 D2549020705400 D2549020705600 D2549020705800 D2549020706000
D2549020706200 D2549020706400 D2549020706600 D2549020706800 D2549020707000
D2549020707200 D2549020707400 D2549020707800 D2549020708000 D2549020708200
D2549020708400 D2549020708600 D2549020708800 D2549020709000 D2549020709200
D2549020709400 D2549020709600 D2549020709800 D2549020710000 D2549020710200
D2549020710400 D2549020710600 D2549020710800 D2549020711000 D2549020711200
D2549020711400 D2549020711600 D2549020712200 D2549020712400 D2549020712800
D2549020713000 D2549020713200 D2549020713400 D2549020713600 D2549020714000
D2549020714400 D2549020714600 D2549020800000 D2549020800200 D2549020800400
D2549020800600 D2549020800800 D2549020801200 D2549020801400 D2549020801600
D2549020801800 D2549020802000 D2549020802400 D2549020802600 D2549020803000
D2549020803200 D2549020803400 D2549020803600 D2549020803800 D2549020804400
D2549020804800 D2549020805000 D2549020805200 D2549020805600 D2549020805800
D2549020806000 D2549020806200 D2549020806400 D2549020806600 D2549020806800
D2549020807000 D2549020807200 D2549020807400 D2549020807600 D2549020807800
D2549020808200 D2549020808400 D2549020808600 D2549020808800 D2549020809000
D2549020809400 D2549020809600 D2549020809800 D2549020810000 D2549020810200
D2549020810400 D2549020810600 D2549020810800 D2549020811200 D2549020811400
D2549020811600 D2549020811800 D2549020812000 D2549020812200 D2549020812400
D2549020812600 D2549020812800 D2549020813000 D2549020813200 D2549020813400
D2549020813600 D2549020813800 D2549020814200 D2549020814400 D2549020814600
D2549020814800 D2549030400000 D2549030400200 D2549030401000 D2549030401400
D2549030401600 D2549030401800 D2549030402200 D2549030403000 D2549030403800
D2549030404800 D2549030405400 D2549030405600 D2549030405800 D2549030406000
D2549030406400 D2549030406600 D2549030407000 D2549030407200 D2549030407400
D2549030407600 D2549030408000 D2549030408200 D2549030408400 D2549030408600
D2549030409200 D2549030409400 D2549030409600 D2549030410200 D2549030410400
D2549030410600 D2549030410800 D2549030411200 D2549030411400 D2549030411800
D2549030412200 D2549030412400 D2549030412600 D2549030412800 D2549030413000
D2549030413200 D2549030413600 D2549030414000 D2549030414200 D2549030414400
D2549030414600 D2549030503800 D2549030504200 D2549030504600 D2549030504800
D2549030505200 D2549030505600 D2549030505800 D2549030506200 D2549030506400
D2549030506800 D2549030507000 D2549030507200 D2549030507400 D2549030507600
D2549030507800 D2549030508200 D2549030508600 D2549030508800 D2549030509000
D2549030509200 D2549030509600 D2549030509800 D2549030510200 D2549030510400
D2549030510800 D2549030511200 D2549030511600 D2549030511800 D2549030512200
D2549030512400 D2549030512800 D2549030513000 D2549030513400 D2549030513600
D2549030514000 D2549030514200 D2549030514400 D2549030600000 D2549030600400

D2549030600600 D2549030600800 D2549030601000 D2549030601200 D2549030601600
D2549030602000 D2549030602400 D2549030602600 D2549030603000 D2549030603200
D2549030603400 D2549030603600 D2549030604200 D2549030604600 D2549030605000
D2549030605200 D2549030605400 D2549030605800 D2549030606000 D2549030606200
D2549030606400 D2549030606600 D2549030607000 D2549030607200 D2549030607600
D2549030607800 D2549030608400 D2549030608600 D2549030609200 D2549030610000
D2549030610400 D2549030610600 D2549030611000 D2549030611400 D2549030611600
D2549030611800 D2549030612000 D2549030612200 D2549030612600 D2549030612800
D2549030613400 D2549030613800 D2549030614000 D2549030614200 D2549030614400
D2549030614600 D2549030614800 D2549030700000 D2549030700200 D2549030700400
D2549030700800 D2549030701000 D2549030701400 D2549030701600 D2549030701800
D2549030702200 D2549030702600 D2549030703000 D2549030703200 D2549030703400
D2549030703600 D2549030703800 D2549030704000 D2549030704200 D2549030704600
D2549030704800 D2549030705200 D2549030705600 D2549040500200 D2549040500400
D2549040500600 D2549040500800 D2549040501000 D2549040501200 D2549040501400
D2549040501600 D2549040501800 D2549040502000 R225401107-004 R225401115-000
R225401134-008 R225401134-016 R225401134-018 R225401134-024 R225401134-026
R225401134-028 R225401136-000 R225401136-004 R225401136-006 R225401136-008
R225401136-010 R225401136-012 R225401136-014 R225401136-016 R225401136-018
R225401136-020 R225401136-022 R225401136-024 R225401137-000 R225401137-002
R225401137-004 R225401137-006 R225401137-008 R225401137-010 R225401137-012
R225401137-014 R225401137-016 R225401142-000 R225401142-002 R225401145-002
R225401145-004 R225401145-006 R225401145-008 R225401145-010 R225401145-012
R225401145-014 R225401152-000 R225401152-002 R225401152-004 R225401152-006
R225401152-008 R225401152-010 R225401153-000 R225401159-000 R225401168-000
R225401168-002 R225401168-004 R225401168-006 R225401168-008 R225401168-010
R225401168-012 R225401168-014 R225401168-016 R225401168-018 R225401168-020
R225401168-022 R225401168-024 R225401168-026 R225401168-028 R225401172-000
R225401172-002 R225401172-004 R225401172-006 R225401172-008 R225401172-010
R225401172-012 R225401172-014 R225401172-016 R225401172-018 R225401175-000
R225401175-002 R225401176-000 R225401192-000 R225401192-002 R225401195-000
R225401196-000 R225401196-002 R225401196-004 R225401196-006 R225401196-008
R225401196-010 R225401196-012 R225401196-014 R225401196-016 R225401196-018
R225401196-020 R225401196-022 R225401196-024 R225401196-034 R225401196-036
R225401196-038 R225401196-040 R225401196-042 R225401196-044 R225401196-046
R225401196-048 R225401196-050 R225401196-052 R225401196-054 R225401196-056
R225401196-058 R225401196-060 R225401196-062 R225401196-064 R225401196-066
R225401196-068 R225401196-070 R225401199-000 R225401199-002 R225401199-004
R225401199-006 R225401199-008 R225401199-010 R225401199-012 R225401600-000
R225401600-002 R225401600-004 R225401602-000 R225401605-000 R225401605-002
R225401609-000 R225401611-000 R225401611-006 R225401611-008 R225401611-010
R225401611-012 R225401611-014 R225401611-016 R225401611-018 R225401611-020
R225401613-000 R225401619-000 R225401619-002 R225401622-000 R225401622-002
R225401624-000 R225401625-000 R225401627-000 R225401627-002 R225401627-004
R225401629-000 R225401629-002 R225401639-000 R225401639-002 R225401643-000
R225401643-002 R225401643-004 R225401643-006 R225401643-008 R225401646-000
R225401646-002 R225401647-000 R225401648-000 R225401648-002 R225401648-004

R225401648-006 R225401648-008 R225401649-000 R225401656-000 R225401656-002
R225401658-000 R225401662-000 R225401662-002 R225401671-000 R225401671-002
R225401673-000 R225401673-002 R225401673-004 R225401673-006 R225401675-000
R225401676-000 R225401683-000 R225401688-000 R225401689-004 R225401689-006
R225401691-000 R225401693-000 R225401697-000 R225401697-002 R225401803-000
R225401803-002 R225401808-000 R225401814-000

39. Assembly of the Potable Water System

A. General

This task gives you the installation and assembly procedures of the component.

B. Job Set-up Information

(1) Not applicable

C. Procedure

WARNING: **BE CAREFUL WHEN YOU USE SOLVENTS/CLEANING AGENTS, SEALANTS AND OTHER MATERIALS. OBEY THE MATERIAL MANUFACTURER'S INSTRUCTIONS AND THE LOCAL REGULATIONS. MAKE SURE THAT THERE IS A GOOD FLOW OF AIR THROUGH THE WORK AREA. DO NOT BREATHE THE FUMES. DO NOT SMOKE. DO NOT USE THESE MATERIALS NEAR A FLAME, SPARKS OR SOURCES OF HEAT. USE PROTECTIVE CLOTHING, GOGGLES AND GLOVES. IF YOU GET ONE OF THESE MATERIALS ON YOUR SKIN OR IN YOUR EYES, FLUSH IT AWAY WITH A FLOW OF CLEAN WATER. IF YOU GET ONE OF THESE MATERIALS IN YOUR MOUTH, GET IMMEDIATE MEDICAL AID. IN GENERAL, THESE MATERIALS ARE POISONOUS, FLAMMABLE AND SKIN IRRITANTS.**

CAUTION: **DO ALL THE WORK ON A CLEAN, SOFT SURFACE TO PREVENT DAMAGE TO THE COMPONENTS.**

CAUTION: **MAKE SURE THAT ALL THE PARTS ARE CLEAN BEFORE YOU ASSEMBLE THEM.**

SUB TASK 25-41-51-440-039-A01
D2549010509400 D2549010509600 D2549010509800 D2549010510000
D2549010510200 D2549010510600 D2549010510800 D2549010511000
D2549010511400 D2549010511600 D2549010511800 D2549010512000
D2549010512200 D2549010512400 D2549010512600 D2549010513000
D2549010513200 D2549010513400 D2549010513800 D2549010514200
D2549010514400 D2549010514600 D2549010514800 D2549010600000
D2549010600200 D2549010600400 D2549010600600 D2549010600800
D2549010601000 D2549010601600 D2549010601800 D2549010602000

D2549010602200 D2549010602400 D2549010602600 D2549010602800
D2549010603000 D2549010603400 D2549010603600 D2549010603800
D2549010604000 D2549010604200 D2549010604400 D2549010604600
D2549010605600 D2549020506600 D2549020506800 D2549020602200
D2549020604200 D2549020604400 D2549020604600 D2549020604800
D2549020605000 D2549020605200 D2549020605400 D2549020605800
D2549020606000 D2549020606800 D2549020607000 D2549020607400
D2549020607600 D2549020607800 D2549020608400 D2549020608600
D2549020608800 D2549020609000 D2549020609400 D2549020609600
D2549020609800 D2549020610000 D2549020610200 D2549020610400
D2549020610600 D2549020610800 D2549020611000 D2549020611200
D2549020611400 D2549020611600 D2549020611800 D2549020612200
D2549020612400 D2549020612600 D2549020612800 D2549020613000
D2549020613200 D2549020613800 D2549020614000 D2549020614400
D2549020614600 D2549020614800 D2549020700000 D2549020700200
D2549020700400 D2549020700600 D2549020700800 D2549020701400
D2549020701600 D2549020701800 D2549020702000 D2549020702200
D2549020702400 D2549020702600 D2549020702800 D2549020703200
D2549020703400 D2549020703600 D2549020703800 D2549020704000
D2549020704200 D2549020704400 D2549020704800 D2549020705000
D2549020705200 D2549020705400 D2549020705600 D2549020706000
D2549020706200 D2549020706400 D2549020706600 D2549020706800
D2549020707000 D2549020707200 D2549020707400 D2549020707800
D2549020708200 D2549020708400 D2549020708600 D2549020708800
D2549020709000 D2549020709200 D2549020709400 D2549020709800
D2549020710000 D2549020710200 D2549020710400 D2549020710800
D2549020711000 D2549020711200 D2549020711400 D2549020712200
D2549020712400 D2549020713400 D2549020713600 D2549020714400
D2549030504200 D2549030504600 D2549030504800 D2549030505200
D2549030505600 D2549030505800 D2549030506200 D2549030506400
D2549030506800 D2549030507000 D2549030507200 D2549030507400
D2549030507600 D2549030507800 D2549030508200 D2549030508600
D2549030508800 D2549030509000 D2549030509200 D2549030509600
D2549030509800 D2549030510200 D2549030510400 D2549030510800
D2549030511200 D2549030511600 D2549030511800 D2549030512200
D2549030512400 D2549030512800 D2549030513000 D2549030513400
D2549030513600 D2549030514000 D2549030514200 D2549030514400
D2549030600000 D2549030600400 D2549030600600 D2549030600800
D2549030601000 D2549030601200 D2549030601600 D2549030602000
D2549030602400 D2549030602600 D2549030603000 D2549030603400
D2549030603600 D2549030604600 D2549030605000 D2549030605200
D2549030605800 R225401107-004 R225401134-016 R225401134-018 R225401136-
010 R225401136-016 R225401136-020 R225401137-000 R225401137-002 R225401137-
004 R225401137-006 R225401137-008 R225401137-010 R225401137-012 R225401137-
014 R225401142-000 R225401142-002 R225401145-002 R225401145-012 R225401152-
000 R225401152-002 R225401152-004 R225401153-000 R225401159-000 R225401168-
004 R225401168-006 R225401168-014 R225401168-016 R225401168-018 R225401168-

028 R225401172-002 R225401172-004 R225401172-006 R225401172-008 R225401172-010 R225401175-000 R225401175-002 R225401176-000 R225401195-000 R225401196-000 R225401196-046 R225401600-000 R225401600-002

1. Assembly of the Potable Water System (22D-1)

   (a) Attach the shutoff valve bracket 22D-200 with the screws 22D-230 to the shutoff valve 22D-220.

   (b) Attach the shutoff valve bracket 22D-200, the shutoff valve rod 22D-120, the grommet 22D-130, the retaining ring 22D-170 and the bracket 22D-180 with the screws 22D-150 and the washers 22D-190 to the shutoff valve 22D-220.

   (c) Attach the grommet 22D-130 and the bracket 22D-140 with the screws 22D-150, the washers 22D-070 and the nuts 22D-160 to the shutoff valve rod 22D-120 and to the lavatory structure.

   (d) Attach the ground cable in accordance with the Process and Material Specification PMS 01-04-58 to the shutoff valve 22D-220.

   (e) Attach the brackets 22D-040 with the screws 22D-060 and the washers 22D-070 to the lavatory structure.

   (f) Attach the water heater 22D-080 with the clamps 22D-050 to the brackets 22D-040.

   (g) Attach the ground cable in accordance with the Process and Material Specification PMS 01-04-58 to the water heater 22D-080.

   (h) Attach the tee 22D-250 to the water heater 22D-080.

   (i) Attach the tube 22D-270 to the shutoff valve 22D-220.

   (j) Attach the clamp 22D-340 with the screw 22D-360, the washer 22D-370 and the spacer 22D-350.

   (k) Attach the tee 22D-240 to the shutoff valve 22D-220.

   (l) Attach the hose 22D-260 to the tees 22D-240, 22D-250.

   (m) Attach the hose 22D-280 to the tee 22D-240.

   (n) Attach the reducer elbow 22D-090 to the water heater 22D-080.

   NOTE: For further instructions, see CMMV 38-12-16_0AJJ0 (water heater).

(o) Attach the water faucet assembly 22D-010.

(p) Attach the tube of the water faucet assembly 22D-010 to the tee 22D-250.

(q) Attach the tube of the water faucet assembly 22D-010 and the clamp 22D-100 with the spacer 22D-115, the screw 22D-110 and the washer 22D-070.

(r) Attach the tube of the water faucet assembly 22D-010 to the reducer elbow 22D-090.

(s) Attach the tubes of the water faucet assembly 22D-010 and the clamps 22D-100 with the spacer 22D-115, the screw 22D-110 and the washer 22D-070.

(t) Attach the ground cable in accordance with the Process and Material Specification PMS 01-04-58 to the water faucet assembly 22D-010.

(u) Connect the water faucet assembly 22D-010 to the water supply.

NOTE: For further instructions, see CMMV 38-11-03_C3207 (water faucet assembly).

SUB TASK 25-41-51-440-039-B01

D2547160900200 D2547160900400 D2549010400000 D2549010400200
D2549010400400 D2549010400600 D2549010400800 D2549010401000
D2549010401400 D2549010401800 D2549010402000 D2549010402200
D2549010402400 D2549010402600 D2549010402800 D2549010403000
D2549010403400 D2549010403600 D2549010403800 D2549010404200
D2549010404400 D2549010405000 D2549010405200 D2549010405600
D2549010405800 D2549010406000 D2549010406200 D2549010406400
D2549010406800 D2549010407000 D2549010605000 D2549010605200
D2549010605800 D2549010606000 D2549010606200 D2549010606600
D2549010607200 D2549010607600 D2549010608200 D2549010608400
D2549010608800 D2549010609200 D2549010609600 D2549010609800
D2549010610000 D2549010610400 D2549010610800 D2549010611000
D2549010611200 D2549010611800 D2549010612400 D2549010612600
D2549010613000 D2549010613200 D2549010613400 D2549010613800
D2549010614200 D2549010614600 D2549020300000 D2549020300400
D2549020300600 D2549020300800 D2549020301000 D2549020301600
D2549020301800 D2549020302000 D2549020302800 D2549020400000
D2549020400200 D2549020400400 D2549020400600 D2549020400800
D2549020401000 D2549020401200 D2549020401400 D2549020401600
D2549020402000 D2549020402600 D2549020403200 D2549020403400
D2549020403600 D2549020403800 D2549020404000 D2549020404400
D2549020404600 D2549020404800 D2549020405000 D2549020405200
D2549020405400 D2549020405600 D2549020406200 D2549020406400
D2549020406600 D2549020406800 D2549020407000 D2549020407400

D2549020407600 D2549020407800 D2549020408000 D2549020408200
D2549020408600 D2549020409000 D2549020409200 D2549020409400
D2549020409600 D2549020409800 D2549020410200 D2549020410400
D2549020410600 D2549020410800 D2549020411000 D2549020411200
D2549020411400 D2549020411600 D2549020411800 D2549020412000
D2549020412200 D2549020412400 D2549020412600 D2549020413000
D2549020413200 D2549020413400 D2549020413600 D2549020413800
D2549020414000 D2549020414200 D2549020414600 D2549020414800
D2549020502200 D2549020505600 D2549020507400 D2549020507600
D2549020507800 D2549020508000 D2549020508200 D2549020508400
D2549020508600 D2549020508800 D2549020509000 D2549020509200
D2549020509600 D2549020509800 D2549020510000 D2549020510600
D2549020510800 D2549020511000 D2549020511200 D2549020511600
D2549020511800 D2549020512000 D2549020512200 D2549020512400
D2549020512600 D2549020513000 D2549020513200 D2549020513400
D2549020513600 D2549020513800 D2549020514000 D2549020514200
D2549020514400 D2549020514600 D2549020514800 D2549020705800
D2549020708000 D2549020709600 D2549020710600 D2549020711600
D2549020712800 D2549020713000 D2549020713200 D2549020714000
D2549020714600 D2549020800000 D2549020800200 D2549020800400
D2549020800600 D2549020800800 D2549020801200 D2549020801400
D2549020801600 D2549020801800 D2549020802000 D2549020802400
D2549020802600 D2549020803000 D2549020803200 D2549020803400
D2549020803600 D2549020803800 D2549020804400 D2549020804800
D2549020805000 D2549020805200 D2549020805600 D2549020805800
D2549020806200 D2549020806400 D2549020806600 D2549020806800
D2549020807000 D2549020807200 D2549020807400 D2549020807600
D2549020807800 D2549020808200 D2549020808400 D2549020808600
D2549020808800 D2549020809000 D2549020809400 D2549020809600
D2549020809800 D2549020810000 D2549020810200 D2549020810400
D2549020810600 D2549020810800 D2549020811200 D2549020811400
D2549020811600 D2549020811800 D2549020812000 D2549020812200
D2549020812400 D2549020812600 D2549020812800 D2549020813000
D2549020813200 D2549020813400 D2549020813600 D2549020813800
D2549020814200 D2549020814400 D2549020814600 D2549020814800
D2549030400000 D2549030400200 D2549030401000 D2549030401400
D2549030401600 D2549030401800 D2549030402200 D2549030403000
D2549030403800 D2549030404800 D2549030405400 D2549030405600
D2549030405800 D2549030406000 D2549030406400 D2549030406600
D2549030407000 D2549030407200 D2549030407400 D2549030407600
D2549030408000 D2549030408200 D2549030408400 D2549030408600
D2549030409200 D2549030409400 D2549030409600 D2549030410200
D2549030410400 D2549030410600 D2549030410800 D2549030411200
D2549030411400 D2549030411800 D2549030412200 D2549030412400
D2549030412600 D2549030412800 D2549030413000 D2549030413200
D2549030413600 D2549030414000 D2549030414200 D2549030414400
D2549030414600 D2549030503800 D2549030603200 D2549030604200

D2549030605400 D2549030606000 D2549030606200 D2549030606400
D2549030606600 D2549030607000 D2549030607200 D2549030607600
D2549030607800 D2549030608400 D2549030608600 D2549030609200
D2549030610000 D2549030610400 D2549030610600 D2549030611000
D2549030611400 D2549030611600 D2549030611800 D2549030612000
D2549030612200 D2549030612600 D2549030612800 D2549030613400
D2549030613800 D2549030614000 D2549030614200 D2549030614400
D2549030614600 D2549030614800 D2549030700000 D2549030700200
D2549030700400 D2549030700800 D2549030701000 D2549030701400
D2549030701600 D2549030701800 D2549030702200 D2549030702600
D2549030703000 D2549030703200 D2549030703400 D2549030703600
D2549030703800 D2549030704000 D2549030704200 D2549030704600
D2549030704800 D2549030705200 D2549030705600 D2549040500200
D2549040500400 D2549040500600 D2549040500800 D2549040501000
D2549040501200 D2549040501400 D2549040501600 D2549040501800
D2549040502000 R225401115-000 R225401134-008 R225401134-024 R225401134-026
R225401134-028 R225401136-000 R225401136-004 R225401136-006 R225401136-008
R225401136-012 R225401136-014 R225401136-018 R225401136-022 R225401136-024
R225401137-016 R225401145-004 R225401145-006 R225401145-008 R225401145-010
R225401145-014 R225401152-006 R225401152-008 R225401152-010 R225401168-000
R225401168-002 R225401168-008 R225401168-010 R225401168-012 R225401168-020
R225401168-022 R225401168-024 R225401168-026 R225401172-000 R225401172-012
R225401172-014 R225401172-016 R225401172-018 R225401192-000 R225401192-002
R225401196-002 R225401196-004 R225401196-006 R225401196-008 R225401196-012
R225401196-014 R225401196-016 R225401196-018 R225401196-020 R225401196-022
R225401196-024 R225401196-034 R225401196-036 R225401196-038 R225401196-042
R225401196-044 R225401196-048 R225401196-050 R225401196-052 R225401196-054
R225401196-058 R225401196-060 R225401196-062 R225401196-064 R225401196-066
R225401196-068 R225401196-070 R225401199-000 R225401199-002 R225401199-004
R225401199-006 R225401199-008 R225401199-010 R225401199-012 R225401600-004
R225401602-000 R225401605-000 R225401605-002 R225401609-000 R225401611-000
R225401611-006 R225401611-008 R225401611-010 R225401611-012 R225401611-014
R225401611-016 R225401611-018 R225401611-020 R225401613-000 R225401619-000
R225401619-002 R225401622-000 R225401622-002 R225401624-000 R225401625-
000 R225401627-000 R225401627-002 R225401627-004 R225401629-000
R225401629-002 R225401639-000 R225401639-002 R225401643-000 R225401643-
002 R225401643-004 R225401643-006 R225401643-008 R225401646-000
R225401646-002 R225401647-000 R225401648-000 R225401648-002 R225401648-
004 R225401648-006 R225401648-008 R225401649-000 R225401656-000
R225401656-002 R225401658-000 R225401662-000 R225401662-002 R225401671-
000 R225401671-002 R225401673-000 R225401673-002 R225401673-002
R225401673-004 R225401673-006 R225401675-000 R225401676-000 R225401683-
000 R225401688-000 R225401689-004 R225401689-006 R225401691-000
R225401693-000 R225401697-000 R225401697-002 R225401803-000 R225401803-
002 R225401808-000 R225401814-000

2. Assembly of the Potable Water System (22D-1)

(a) Attach the tube 22D-270, the clamps 22D-340 with the screw 22D-410, the washer 22D-370 and the spacer 22D-380.

(b) Attach the shutoff valve bracket 22D-200 with the screws 22D-290 and the washers 22D-300 to the shutoff valve 22D-220.

(c) Attach the shutoff valve bracket 22D-200, the shutoff valve rod 22D-120, the grommet 22D-130, the retaining ring 22D-170 and the bracket 22D-180 with the screws 22D-150 and the washers 22D-190 to the shutoff valve 22D-220.

(d) Attach the grommet 22D-130 and the bracket 22D-140 with the screws 22D-150, the washers 22D-070 and the nuts 22D-160 to the shutoff valve rod 22D-120 and to the lavatory structure.

(e) Attach the ground cable in accordance with the Process and Material Specification PMS 01-04-58 to the shutoff valve 22D-220.

(f) Attach the brackets 22D-040 with the screws 22D-060 and the washers 22D-070 to the lavatory structure.

(g) Attach the water heater 22D-080 with the clamps 22D-050 to the brackets 22D-040.

(h) Attach the ground cable in accordance with the Process and Material Specification PMS 01-04-58 to the water heater 22D-080.

(i) Attach the tee 22D-250 to the water heater 22D-080.

(j) Attach the tube 22D-270 to the shutoff valve 22D-220.

(k) Attach the clamp 22D-340 with the screw 22D-360, the washer 22D-370 and the spacer 22D-350.

(l) Attach the tee 22D-240 to the shutoff valve 22D-220.

(m) Attach the hose 22D-260 to the tees 22D-240, 22D-250.

(n) Attach the hose 22D-280 to the tee 22D-240.

(o) Attach the reducer elbow 22D-090 to the water heater 22D-080.

NOTE: For further instructions, see CMMV 38-12-16_0AJJ0 (water heater).

(p) Attach the water faucet assembly 22D-010.

(q) Attach the tube of the water faucet assembly 22D-010 to the tee 22D-250.

(r) Attach the tube of the water faucet assembly 22D-010 and the clamp 22D-100 with the spacer 22D-115, the screw 22D-110 and the washer 22D-070.

(s) Attach the tube of the water faucet assembly 22D-010 to the reducer elbow 22D-090.

(t) Attach the tubes of the water faucet assembly 22D-010 and the clamps 22D-100 with the spacer 22D-115, the screw 22D-110 and the washer 22D-070.

(u) Attach the ground cable in accordance with the Process and Material Specification PMS 01-04-58 to the water faucet assembly 22D-010.

(v) Connect the water faucet assembly 22D-010 to the water supply.

NOTE: For further instructions, see CMMV 38-11-03_C3207 (water faucet assembly).

SUB TASK 25-41-51-440-039-C01
D2549020806000 R225401196-010 R225401196-040 R225401196-056

3. Assembly of the Potable Water System (22D-1)

(a) Attach the shutoff valve bracket 22D-200 with the screws 22D-290 and the washers 22D-300 to the shutoff valve 22D-220.

(b) Attach the shutoff valve bracket 22D-200, the shutoff valve rod 22D-120, the grommet 22D-130, the retaining ring 22D-170 and the bracket 22D-180 with the screws 22D-150 and the washers 22D-190 to the shutoff valve 22D-220.

(c) Attach the grommet 22D-130 and the bracket 22D-140 with the screws 22D-150, the washers 22D-070 and the nuts 22D-160 to the shutoff valve rod 22D-120 and to the lavatory structure.

(d) Attach the ground cable in accordance with the Process and Material Specification PMS 01-04-58 to the shutoff valve 22D-220.

(e) Attach the brackets 22D-040 with the screws 22D-060 and the washers 22D-070 to the lavatory structure.

(f) Attach the water heater 22D-080 with the clamps 22D-050 to the brackets 22D-040.

(g) Attach the ground cable in accordance with the Process and Material Specification PMS 01-04-58 to the water heater 22D-080.

(h) Attach the tee 22D-250 to the water heater 22D-080.

(i) Attach the tube 22D-270 to the shutoff valve 22D-220.

(j) Attach the tube 22D-270 and the clamp 22D-340 with the spacers 22D-350, the screw 22D-360, the insert 22D-365 and the washer 22D-370.

(k) Attach the tee 22D-240 to the shutoff valve 22D-220.

(l) Attach the hose 22D-260 to the tees 22D-240, 22D-250.

(m) Attach the hose 22D-260 and the clamps 22D-390, 22D-400 with the spacer 22D-380, the screw 22D-410 and the washer 22D-370.

(n) Attach the hose 22D-280 to the tee 22D-240.

(o) Attach the reducer elbow 22D-090 to the water heater 22D-080.

NOTE: For further instructions, see CMMV 38-12-16_0AJJ0 (water heater).

(p) Attach the water faucet assembly 22D-010.

(q) Attach the tube of the water faucet assembly 22D-010 to the tee 22D-250.

(r) Attach the tube of the water faucet assembly 22D-010 and the clamp 22D-100 with the spacer 22D-115, the screw 22D-110 and the washer 22D-070.

(s) Attach the tube of the water faucet assembly 22D-010 to the reducer elbow 22D-090.

(t) Attach the tubes of the water faucet assembly 22D-010 and the clamps 22D-100 with the spacer 22D-115, the screw 22D-110 and the washer 22D-070.

(u) Attach the ground cable in accordance with the Process and Material Specification PMS 01-04-58 to the water faucet assembly 22D-010.

(v) Connect the water faucet assembly 22D-010 to the water supply.

NOTE: For further instructions, see CMMV 38-11-03_C3207 (water faucet assembly).

TASK 25-41-51-400-804-F01
D2549010401600 D2549010514000 D2549010610200 D2549010611400 D2549020506200 D2549020506400 D2549020507000 D2549020507200 D2549020701000 D2549030402400 D2549030403600 D2549030404400 D2549030505400 D2549030506600 D2549030509400 D2549030513800 D2549030601800 D2549030603800 D2549030607400 D2549030608800 D2549030611200 D2549030613200

40. Assembly of the Potable Water System

A. General

This task gives you the installation and assembly procedures of the component.

B. Job Set-up Information

(1) Not applicable

C. Procedure

WARNING: BE CAREFUL WHEN YOU USE SOLVENTS/CLEANING AGENTS, SEALANTS AND OTHER MATERIALS. OBEY THE MATERIAL MANUFACTURER'S INSTRUCTIONS AND THE LOCAL REGULATIONS. MAKE SURE THAT THERE IS A GOOD FLOW OF AIR THROUGH THE WORK AREA. DO NOT BREATHE THE FUMES. DO NOT SMOKE. DO NOT USE THESE MATERIALS NEAR A FLAME, SPARKS OR SOURCES OF HEAT. USE PROTECTIVE CLOTHING, GOGGLES AND GLOVES. IF YOU GET ONE OF THESE MATERIALS ON YOUR SKIN OR IN YOUR EYES, FLUSH IT AWAY WITH A FLOW OF CLEAN WATER. IF YOU GET ONE OF THESE MATERIALS IN YOUR MOUTH, GET IMMEDIATE MEDICAL AID. IN GENERAL, THESE MATERIALS ARE POISONOUS, FLAMMABLE AND SKIN IRRITANTS.

CAUTION: DO ALL THE WORK ON A CLEAN, SOFT SURFACE TO PREVENT DAMAGE TO THE COMPONENTS.

CAUTION: MAKE SURE THAT ALL THE PARTS ARE CLEAN BEFORE YOU ASSEMBLE THEM.

SUB TASK 25-41-51-440-040-A01
D2549010514000 D2549020506200 D2549020506400 D2549020507000 D2549020507200 D2549020701000 D2549030505400 D2549030506600 D2549030509400 D2549030513800 D2549030601800 D2549030603800

1. Assembly of the Potable Water System (22E-1)

(a) Attach the shutoff valve bracket 22E-200 with the screws 22E-230 to the shutoff valve 22E-220.

(b) Attach the shutoff valve bracket 22E-200, the shutoff valve rod 22E-120, the grommet 22E-130, the retaining ring 22E-170 and the bracket 22E-180 with the screws 22E-150 and the washers 22E-190 to the shutoff valve 22E-220 and to the lavatory structure.

(c) Attach the grommet 22E-130 and the bracket 22E-140 with the screws 22E-150, the washers 22E-070 and the nuts 22E-160 to the shutoff valve rod 22E-120 and to the lavatory structure.

(d) Attach the ground cable in accordance with the Process and Material Specification PMS 01-04-58 to the shutoff valve 22E-220.

(e) Attach the brackets 22E-040 with the screws 22E-060 and the washers 22E-070 to the lavatory structure.

(f) Attach the water heater 22E-080 with the clamps 22E-050 to the brackets 22E-040.

(g) Attach the ground cable in accordance with the Process and Material Specification PMS 01-04-58 to the water heater 22E-080.

(h) Attach the drinking water filter assembly 22E-290 with the screws 22E-060 and the washers 22E-070 to the lavatory structure.

(i) Attach the tee 22E-240 to the shutoff valve 22E-220.

(j) Attach the tube 22E-270 to the shutoff valve 22E-220.

(k) Attach the hose 22E-280 to the tee 22E-240.

(l) Attach the hose 22E-260 to the tee 22E-240.

(m) Attach the hose 22E-310 to the drinking water filter assembly 22E-290.

(n) Attach the tube 22E-300 to the drinking water filter assembly 22E-290.

NOTE: For further instructions, see CMMV 38-12-23_61372 (drinking water filter assembly).

(o) Attach the tee 22E-340 to the hoses 22E-260, 22E-310.

(p) Attach the nonreturn valve 22E-330 to the tee 22E-340.

(q) Attach the ground cable in accordance with the Process and Material Specification PMS 01-04-58 to the nonreturn valve 22E-330.

(r) Attach the tee 22E-250 to the tube 22E-300 and to the nonreturn valve 22E-330.

NOTE: For further instructions, see CMMV 38-10-15_U9084 (nonreturn valve).

(s) Attach the tube 22E-320 to the tee 22E-250.

(t) Attach the tee 22E-250 to the water heater 22E-080 and to the tube 22E-320.

(u) Attach the reducer elbow 22E-090 to the water heater 22E-080.

NOTE: For further instructions, see CMMV 38-12-16_0AJJ0 (water heater).

(v) Attach the water faucet assembly 22E-010.

(w) Attach the tube of the water faucet assembly 22E-010 to the tee 22E-250.

(x) Attach the tube of the water faucet assembly 22E-010 and the clamp 22E-100 with the spacer 22E-115, the screw 22E-110 and the washer 22E-070.

(y) Attach the tube of the water faucet assembly 22E-010 to the reducer elbow 22E-090.

(z) Attach the tubes of the water faucet assembly 22E-010 and the clamps 22E-100 with the spacer 22E-115, the screw 22E-110 and the washer 22E-070.

(aa) Attach the ground cable in accordance with the Process and Material Specification PMS 01-04-58 to the water faucet assembly 22E-010.

(ab) Connect the water faucet assembly 22E-010 to the water supply.

NOTE: For further instructions, see CMMV 38-11-03_C3207 (water faucet assembly).

SUB TASK 25-41-51-440-040-B01
D2549010401600 D2549010610200 D2549010611400 D2549030402400 D2549030403600 D2549030404400 D2549030607400 D2549030608800 D2549030611200 D2549030613200

2. Assembly of the Potable Water System (22E-1)

(a) Attach the shutoff valve bracket 22E-200 with the screws 22E-350 and the washers 22E-360 to the shutoff valve 22E-220.

(b) Attach the shutoff valve bracket 22E-200, the shutoff valve rod 22E-120, the grommet 22E-130, the retaining ring 22E-170 and the bracket 22E-180 with the screws 22E-150 and the washers 22E-190 to the shutoff valve 22E-220 and to the lavatory structure.

(c) Attach the grommet 22E-130 and the bracket 22E-140 with the screws 22E-150, the washers 22E-070 and the nuts 22E-160 to the shutoff valve rod 22E-120 and to the lavatory structure.

(d) Attach the ground cable in accordance with the Process and Material Specification PMS 01-04-58 to the shutoff valve 22E-220.

(e) Attach the brackets 22E-040 with the screws 22E-060 and the washers 22E-070 to the lavatory structure.

(f) Attach the water heater 22E-080 with the clamps 22E-050 to the brackets 22E-040.

(g) Attach the ground cable in accordance with the Process and Material Specification PMS 01-04-58 to the water heater 22E-080.

(h) Attach the drinking water filter assembly 22E-290 with the screws 22E-060 and the washers 22E-070 to the lavatory structure.

(i) Attach the tee 22E-240 to the shutoff valve 22E-220.

(j) Attach the tube 22E-270 to the shutoff valve 22E-220.

(k) Attach the hose 22E-280 to the tee 22E-240.

(l) Attach the hose 22E-260 to the tee 22E-240.

(m) Attach the hose 22E-310 to the drinking water filter assembly 22E-290.

(n) Attach the tube 22E-300 to the drinking water filter assembly 22E-290.

NOTE: For further instructions, see CMMV 38-12-23_61372 (drinking water filter assembly).

(o) Attach the tee 22E-340 to the hoses 22E-260, 22E-310.

(p) Attach the nonreturn valve 22E-330 to the tee 22E-340.

(q) Attach the ground cable in accordance with the Process and Material Specification PMS 01-04-58 to the nonreturn valve 22E-330.

(r) Attach the tee 22E-250 to the tube 22E-300 and to the nonreturn valve 22E-330.

NOTE: For further instructions, see CMMV 38-10-15_U9084 (nonreturn valve).

(s) Attach the tube 22E-320 to the tee 22E-250.

(t) Attach the tee 22E-250 to the water heater 22E-080 and to the tube 22E-320.

(u) Attach the reducer elbow 22E-090 to the water heater 22E-080.

NOTE: For further instructions, see CMMV 38-12-16_0AJJ0 (water heater).

(v) Attach the water faucet assembly 22E-010.

(w) Attach the tube of the water faucet assembly 22E-010 to the tee 22E-250.

(x) Attach the tube of the water faucet assembly 22E-010 and the clamp 22E-100 with the spacer 22E-115, the screw 22E-110 and the washer 22E-070.

(y) Attach the tube of the water faucet assembly 22E-010 to the reducer elbow 22E-090.

(z) Attach the tubes of the water faucet assembly 22E-010 and the clamps 22E-100 with the spacer 22E-115, the screw 22E-110 and the washer 22E-070.

(aa) Attach the ground cable in accordance with the Process and Material Specification PMS 01-04-58 to the water faucet assembly 22E-010.

(ab) Connect the water faucet assembly 22E-010 to the water supply.

NOTE: For further instructions, see CMMV 38-11-03_C3207 (water faucet assembly).

TASK 25-41-51-400-804-G01
D2549010403200 D2549010404600 D2549010404800 D2549010510400 D2549010601200 D2549010603200 D2549010604800 D2549010606400 D2549010607800 D2549010609400 D2549010610600 D2549020412800 D2549030413400 D2549030700600 D2549030704400 R225401183-000 R225401183-002 R225401183-004 R225401183-006 R225401183-008 R225401603-000 R225401685-000 R225401685-002 R225401811-000

41. Assembly of the Potable Water System

A. General

This task gives you the installation and assembly procedures of the component.

B. Job Set-up Information

(1) Not applicable

C. Procedure

WARNING: BE CAREFUL WHEN YOU USE SOLVENTS/CLEANING AGENTS, SEALANTS AND OTHER MATERIALS. OBEY THE MATERIAL MANUFACTURER'S INSTRUCTIONS AND THE LOCAL REGULATIONS. MAKE SURE THAT THERE IS A GOOD FLOW OF AIR THROUGH THE WORK AREA. DO NOT BREATHE THE FUMES. DO NOT SMOKE. DO NOT USE THESE MATERIALS NEAR A FLAME, SPARKS OR SOURCES OF HEAT. USE PROTECTIVE CLOTHING, GOGGLES AND GLOVES. IF YOU GET ONE OF THESE MATERIALS ON YOUR SKIN OR IN YOUR EYES, FLUSH IT AWAY WITH A FLOW OF CLEAN WATER. IF YOU GET ONE OF THESE MATERIALS IN YOUR MOUTH, GET IMMEDIATE MEDICAL AID. IN GENERAL, THESE MATERIALS ARE POISONOUS, FLAMMABLE AND SKIN IRRITANTS.

CAUTION: DO ALL THE WORK ON A CLEAN, SOFT SURFACE TO PREVENT DAMAGE TO THE COMPONENTS.

CAUTION: MAKE SURE THAT ALL THE PARTS ARE CLEAN BEFORE YOU ASSEMBLE THEM.

SUB TASK 25-41-51-440-041-A01
D2549010510400 D2549010601200 D2549010603200 D2549010604800 R225401603-000

1. Assembly of the Potable Water System (22F-1)

(a) Attach the shutoff valve bracket 22F-220 with the screws 22F-250 to the shutoff valve 22F-240.

(b) Attach the shutoff valve bracket 22F-220, the shutoff valve rod 22F-140, the grommet 22F-150, the retaining ring 22F-190 and the bracket 22F-200 with the screws 22F-170 and the washers 22F-210 to the shutoff valve 22F-240 and to the lavatory structure.

(c) Attach the grommet 22F-150 and the bracket 22F-160 with the screws 22F-170, the washers 22F-060 and the nuts 22F-180 to the shutoff valve rod 22F-140 and to the lavatory structure.

(d) Attach the ground cable in accordance with the Process and Material Specification PMS 01-04-58 to the shutoff valve 22F-240.

(e) Attach the angle 22F-130 with the screws 22F-050 and the washers 22F-060 to the lavatory structure.

(f) Attach the brackets 22F-030 with the screws 22F-050 and the washers 22F-060 to the lavatory structure.

(g) Attach the water heater 22F-070 with the clamps 22F-040 to the brackets 22F-030.

(h) Attach the ground cable in accordance with the Process and Material Specification PMS 01-04-58 to the water heater 22F-070.

(i) Attach the tube 22F-290 to the shutoff valve 22F-240.

(j) Attach the tee 22F-260 to the shutoff valve 22F-240.

(k) Attach the hose 22F-300 to the tee 22F-260.

(l) Attach the hose 22F-280 to the tee 22F-260.

(m) Attach the tee 22F-270 to the water heater 22F-070 and to the hose 22F-280.

(n) Attach the remaining parts of the infrared faucet assembly 22F-010 with the screws 22F-050, the washers 22F-060 and the nuts 22F-180.

(o) Attach the hoses 22F-080, 22F-090 to the water heater 22F-070, to the tee 22F-270 and to the valve of the infrared faucet assembly 22F-010.

NOTE: For further instructions, see CMMV 38-12-16_0AJJ0 (water heater).

(p) Attach the hose 22F-090 and the clamps 22F-100 with the spacers 22F-110, the screws 22F-120 and the washers 22F-060.

(q) Attach the infrared faucet assembly 22F-010 with the screw 22F-020.

(r) Attach the ground cable in accordance with the Process and Material Specification PMS 01-04-58 to the infrared faucet assembly 22F-010.

(s) Connect the infrared faucet assembly 22F-010 to the water supply and to the electrical supply.

NOTE: For further instructions, see CMMV 38-20-20_80477 (infrared faucet assembly).

SUB TASK 25-41-51-440-041-B01
D2549010403200 D2549010404600 D2549010404800 D2549010606400 D2549010607800 D2549010609400 D2549010610600 D2549020412800 D2549030413400 D2549030700600 D2549030704400 R225401183-000 R225401183-002 R225401183-004 R225401183-006 R225401183-008 R225401685-000 R225401685-002 R225401811-000

2. Assembly of the Potable Water System (22F-1)

(a) Attach the shutoff valve bracket 22F-220 with the screws 22F-310 and the washers 22F-320 to the shutoff valve 22F-240.

(b) Attach the shutoff valve bracket 22F-220, the shutoff valve rod 22F-140, the grommet 22F-150, the retaining ring 22F-190 and the bracket 22F-200 with the screws 22F-170 and the washers 22F-210 to the shutoff valve 22F-240 and to the lavatory structure.

(c) Attach the grommet 22F-150 and the bracket 22F-160 with the screws 22F-170, the washers 22F-060 and the nuts 22F-180 to the shutoff valve rod 22F-140 and to the lavatory structure.

(d) Attach the ground cable in accordance with the Process and Material Specification PMS 01-04-58 to the shutoff valve 22F-240.

(e) Attach the angle 22F-130 with the screws 22F-050 and the washers 22F-060 to the lavatory structure.

(f) Attach the brackets 22F-030 with the screws 22F-050 and the washers 22F-060 to the lavatory structure.

(g) Attach the water heater 22F-070 with the clamps 22F-040 to the brackets 22F-030.

(h) Attach the ground cable in accordance with the Process and Material Specification PMS 01-04-58 to the water heater 22F-070.

(i) Attach the tube 22F-290 to the shutoff valve 22F-240.

(j) Attach the tee 22F-260 to the shutoff valve 22F-240.

(k) Attach the hose 22F-300 to the tee 22F-260.

(l) Attach the hose 22F-280 to the tee 22F-260.

(m) Attach the tee 22F-270 to the water heater 22F-070 and to the hose 22F-280.

(n) Attach the remaining parts of the infrared faucet assembly or the water faucet assembly 22F-010 with the screws 22F-050, the washers 22F-060 and the nuts 22F-180.

(o) Attach the hoses 22F-080, 22F-090 to the water heater 22F-070, to the tee 22F-270 and to the valve of the infrared faucet assembly or the water faucet assembly 22F-010.

NOTE: For further instructions, see CMMV 38-12-16_0AJJ0 (water heater).

(p) Attach the hose 22F-090 and the clamps 22F-100 with the spacers 22F-110, the screws 22F-120 and the washers 22F-060.

(q) Attach the infrared faucet assembly or the water faucet assembly 22F-010 with the screw 22F-020.

(r) Attach the ground cable in accordance with the Process and Material Specification PMS 01-04-58 to the infrared faucet assembly or the water faucet assembly 22F-010.

(s) Connect the infrared faucet assembly or the water faucet assembly 22F-010 to the water supply and to the electrical supply.

NOTE: For further instructions, see CMMV 38-20-20_80477 (infrared faucet assembly or water faucet assembly).

TASK 25-41-51-400-804-H01

D2549010405400 D2549010606800 D2549010607000 D2549010607400 D2549010608600
D2549010609000 D2549010611600 D2549010612000 D2549010612200 D2549010613600
D2549010614800 D2549020402400 D2549020403000 D2549020404200 D2549020405800
D2549020406000 D2549020408800 D2549020512800 D2549020605600 D2549020608200
D2549020609200 D2549020612000 D2549020613600 D2549020701200 D2549020704600
D2549020707600 D2549020801000 D2549020802200 D2549020802800 D2549020804000
D2549020804200 D2549020814000 D2549030400400 D2549030400600 D2549030401200
D2549030402000 D2549030402600 D2549030402800 D2549030403400 D2549030404200
D2549030404600 D2549030405000 D2549030405200 D2549030406800 D2549030407800
D2549030409000 D2549030409800 D2549030410000 D2549030411600 D2549030414800
D2549030504000 D2549030506000 D2549030508000 D2549030508400 D2549030510000
D2549030510600 D2549030511400 D2549030513200 D2549030514600 D2549030600200
D2549030601400 D2549030602200 D2549030602800 D2549030604400 D2549030604800
D2549030605600 D2549030606800 D2549030608000 D2549030608200 D2549030609000
D2549030609800 D2549030612400 D2549030702000 D2549030702400 D2549030702800
R225401134-002 R225401134-004 R225401134-006 R225401134-010 R225401134-012
R225401134-014 R225401134-020 R225401134-022 R225401134-030 R225401134-032
R225401134-034 R225401134-036 R225401134-038 R225401160-000 R225401160-002
R225401614-000 R225401618-000 R225401618-002 R225401691-002

42. Assembly of the Potable Water System

A. General

This task gives you the installation and assembly procedures of the component.

B. Job Set-up Information

(1) Not applicable

C. Procedure

WARNING: BE CAREFUL WHEN YOU USE SOLVENTS/CLEANING AGENTS, SEALANTS AND OTHER MATERIALS. OBEY THE MATERIAL MANUFACTURER'S INSTRUCTIONS AND THE LOCAL REGULATIONS. MAKE SURE THAT THERE IS A GOOD FLOW OF AIR THROUGH THE WORK AREA. DO NOT BREATHE THE FUMES. DO NOT SMOKE. DO NOT USE THESE MATERIALS NEAR A FLAME, SPARKS OR SOURCES OF HEAT. USE PROTECTIVE CLOTHING, GOGGLES AND GLOVES. IF YOU GET ONE OF THESE MATERIALS ON YOUR SKIN OR IN YOUR EYES, FLUSH IT AWAY WITH A FLOW OF CLEAN WATER. IF YOU GET ONE OF THESE MATERIALS IN YOUR MOUTH, GET IMMEDIATE MEDICAL AID. IN GENERAL, THESE MATERIALS ARE POISONOUS, FLAMMABLE AND SKIN IRRITANTS.

CAUTION: **DO ALL THE WORK ON A CLEAN, SOFT SURFACE TO PREVENT DAMAGE TO THE COMPONENTS.**

CAUTION: **MAKE SURE THAT ALL THE PARTS ARE CLEAN BEFORE YOU ASSEMBLE THEM.**

SUB TASK 25-41-51-440-042-A01

D2549020605600 D2549020608200 D2549020609200 D2549020612000 D2549020613600 D2549020701200 D2549020704600 D2549020707600 D2549030504000 D2549030506000 D2549030508000 D2549030508400 D2549030510000 D2549030510600 D2549030511400 D2549030513200 D2549030514600 D2549030601400 D2549030602200 D2549030602800 D2549030604400 D2549030604800 R225401134-002 R225401134-004 R225401134-006 R225401134-020 R225401134-022 R225401160-000 R225401160-002

1. Assembly of the Potable Water System (22G-1)

   (a) Attach the shutoff valve bracket 22G-180 with the screws 22G-210 to the shutoff valve 22G-200.

   (b) Attach the shutoff valve bracket 22G-180, the shutoff valve rod 22G-100, the grommet 22G-110, the retaining ring 22G-150 and the bracket 22G-160 with the screws 22G-130 and the washers 22G-170 to the shutoff valve 22G-200 and to the lavatory structure.

   (c) Attach the grommet 22G-110 and the bracket 22G-120 with the screws 22G-130, the washers 22G-050 and the nuts 22G-140 to the shutoff valve rod 22G-100 and to the lavatory structure.

   (d) Attach the ground cable in accordance with the Process and Material Specification PMS 01-04-58 to the shutoff valve 22G-200.

   (e) Attach the brackets 22G-020 with the screws 22G-040 and the washers 22G-050 to the lavatory structure.

   (f) Attach the water heater 22G-060 with the clamps 22G-030 to the brackets 22G-020.

   (g) Attach the ground cable in accordance with the Process and Material Specification PMS 01-04-58 to the water heater 22G-060.

   (h) Attach the tube 22G-250 to the shutoff valve 22G-200.

   (i) Attach the tube 22G-250 and the clamp 22G-270 with the spacer 22G-290, the screw 22G-280 and the washer 22G-050.

(j) Attach the tee 22G-220 to the shutoff valve 22G-200.

(k) Attach the hose 22G-260 to the tee 22G-220.

(l) Attach the hose 22G-240 to the tee 22G-220.

(m) Attach the tee 22G-230 to the hose 22G-240 and to the water heater 22G-060.

(n) Attach the reducer elbow 22G-070 to the water heater 22G-060.

NOTE: For further instructions, see CMMV 38-12-16_0AJJ0 (water heater).

(o) Attach the water faucet assembly 22G-010.

(p) Attach the tube of the water faucet assembly 22G-010 to the tee 22G-230.

(q) Attach the tube of the water faucet assembly 22G-010 and the clamp 22G-080 with the spacer 22G-095, the screw 22G-090 and the washer 22G-050.

(r) Attach the tube of the water faucet assembly 22G-010 to the reducer elbow 22G-070.

(s) Attach the tubes of the water faucet assembly 22G-010 and the clamps 22G-080 with the spacer 22G-095, the screw 22G-090 and the washer 22G-050.

(t) Attach the ground cable in accordance with the Process and Material Specification PMS 01-04-58 to the water faucet assembly 22G-010.

(u) Connect the water faucet assembly 22G-010 to the water supply.

NOTE: For further instructions, see CMMV 38-11-03_C3207 (water faucet assembly).

SUB TASK 25-41-51-440-042-B01

D2549010405400 D2549010606800 D2549010607000 D2549010607400
D2549010608600 D2549010609000 D2549010611600 D2549010612000
D2549010612200 D2549010613600 D2549010614800 D2549020402400
D2549020403000 D2549020404200 D2549020405800 D2549020406000
D2549020408800 D2549020512800 D2549020801000 D2549020802200
D2549020802800 D2549020804000 D2549020804200 D2549020814000
D2549030400400 D2549030400600 D2549030401200 D2549030402000
D2549030402600 D2549030402800 D2549030403400 D2549030404200
D2549030404600 D2549030405000 D2549030405200 D2549030406800
D2549030407800 D2549030409000 D2549030409800 D2549030410000
D2549030411600 D2549030414800 D2549030600200 D2549030605600

D2549030606800 D2549030608000 D2549030608200 D2549030609000 D2549030609800 D2549030612400 D2549030702000 D2549030702400 D2549030702800 R225401134-010 R225401134-012 R225401134-014 R225401134-030 R225401134-032 R225401134-034 R225401134-036 R225401134-038 R225401614-000 R225401618-000 R225401618-002 R225401691-002

2. Assembly of the Potable Water System (22G-1)

(a) Attach the shutoff valve bracket 22G-180 with the screws 22G-320 and the washers 22G-330 to the shutoff valve 22G-200.

(b) Attach the shutoff valve bracket 22G-180, the shutoff valve rod 22G-100, the grommet 22G-110, the retaining ring 22G-150 and the bracket 22G-160 with the screws 22G-130 and the washers 22G-170 to the shutoff valve 22G-200 and to the lavatory structure.

(c) Attach the grommet 22G-110 and the bracket 22G-120 with the screws 22G-130, the washers 22G-050 and the nuts 22G-140 to the shutoff valve rod 22G-100 and to the lavatory structure.

(d) Attach the ground cable in accordance with the Process and Material Specification PMS 01-04-58 to the shutoff valve 22G-200.

(e) Attach the brackets 22G-020 with the screws 22G-040 and the washers 22G-050 to the lavatory structure.

(f) Attach the water heater 22G-060 with the clamps 22G-030 to the brackets 22G-020.

(g) Attach the ground cable in accordance with the Process and Material Specification PMS 01-04-58 to the water heater 22G-060.

(h) Attach the tube 22G-250 to the shutoff valve 22G-200.

(i) Attach the tube 22G-250 and the clamp 22G-270 with the spacer 22G-290, the screw 22G-280 and the washer 22G-050.

(j) Attach the tee 22G-220 to the shutoff valve 22G-200.

(k) Attach the hose 22G-260 to the tee 22G-220.

(l) Attach the hose 22G-240 to the tee 22G-220.

(m) Attach the tee 22G-230 to the hose 22G-240 and to the water heater 22G-060.

(n) Attach the reducer elbow 22G-070 to the water heater 22G-060.

NOTE: For further instructions, see CMMV 38-12-16_0AJJ0 (water heater).

(o) Attach the water faucet assembly 22G-010.

(p) Attach the tube of the water faucet assembly 22G-010 to the tee 22G-230.

(q) Attach the tube of the water faucet assembly 22G-010 and the clamp 22G-080 with the spacer 22G-095, the screw 22G-090 and the washer 22G-050.

(r) Attach the tube of the water faucet assembly 22G-010 to the reducer elbow 22G-070.

(s) Attach the tubes of the water faucet assembly 22G-010 and the clamps 22G-080 with the spacer 22G-095, the screw 22G-090 and the washer 22G-050.

(t) Attach the ground cable in accordance with the Process and Material Specification PMS 01-04-58 to the water faucet assembly 22G-010.

(u) Connect the water faucet assembly 22G-010 to the water supply.

NOTE: For further instructions, see CMMV 38-11-03_C3207 (water faucet assembly).

TASK 25-41-51-400-804-J01
D2549010404000 D2549010513600 D2549010601400 D2549010614400 D2549020402200 D2549020407200 D2549020510400 D2549020713800 D2549020805400 D2549030404000 D2549030412000 D2549030511000 D2549030512000 D2549030514800 D2549030613600

43. Assembly of the Potable Water System

A. General

This task gives you the installation and assembly procedures of the component.

B. Job Set-up Information

(1) Not applicable

C. Procedure

WARNING: BE CAREFUL WHEN YOU USE SOLVENTS/CLEANING AGENTS, SEALANTS AND OTHER MATERIALS. OBEY THE MATERIAL MANUFACTURER'S INSTRUCTIONS AND THE LOCAL REGULATIONS. MAKE SURE THAT THERE IS A GOOD FLOW OF AIR THROUGH THE WORK AREA. DO NOT BREATHE THE FUMES. DO NOT SMOKE. DO NOT USE THESE MATERIALS NEAR A FLAME, SPARKS OR SOURCES OF HEAT. USE PROTECTIVE CLOTHING, GOGGLES AND GLOVES. IF YOU GET ONE OF THESE MATERIALS ON YOUR SKIN OR IN YOUR EYES, FLUSH IT AWAY WITH A FLOW OF CLEAN WATER. IF YOU GET ONE OF THESE MATERIALS IN YOUR MOUTH, GET IMMEDIATE MEDICAL AID. IN GENERAL, THESE MATERIALS ARE POISONOUS, FLAMMABLE AND SKIN IRRITANTS.

CAUTION: DO ALL THE WORK ON A CLEAN, SOFT SURFACE TO PREVENT DAMAGE TO THE COMPONENTS.

CAUTION: MAKE SURE THAT ALL THE PARTS ARE CLEAN BEFORE YOU ASSEMBLE THEM.

SUB TASK 25-41-51-440-043-A01
D2549010513600 D2549010601400 D2549030511000 D2549030512000 D2549030514800

1. Assembly of the Potable Water System (22H-1)

(a) Attach the shutoff valve bracket 22H-220 with the screws 22H-250 to the shutoff valve 22H-240.

(b) Attach the shutoff valve bracket 22H-220, the shutoff valve rod 22H-140, the grommet 22H-150, the retaining ring 22H-190 and the bracket 22H-200 with the screws 22H-170 and the washers 22H-210 to the shutoff valve 22H-240 and to the lavatory structure.

(c) Attach the grommet 22H-150 and the bracket 22H-160 with the screws 22H-170, the washers 22H-060 and the nuts 22H-180 to the shutoff valve rod 22H-140 and to the lavatory structure.

(d) Attach the ground cable in accordance with the Process and Material Specification PMS 01-04-58 to the shutoff valve 22H-240.

(e) Attach the angle 22H-130 with the screws 22H-050 and the washers 22H-060 to the lavatory structure.

(f) Attach the brackets 22H-030 with the screws 22H-050 and the washers 22H-060 to the lavatory structure.

(g) Attach the water heater 22H-070 with the clamps 22H-040 to the brackets 22H-030.

(h) Attach the ground cable in accordance with the Process and Material Specification PMS 01-04-58 to the water heater 22H-070.

(i) Attach the tube 22H-290 to the shutoff valve 22H-240.

(j) Attach the tube 22H-290 and the clamp 22H-310 with the spacer 22H-330, the screw 22H-320 and the washer 22H-060.

(k) Attach the tee 22H-260 to the shutoff valve 22H-240.

(l) Attach the hose 22H-300 to the tee 22H-260.

(m) Attach the hose 22H-280 to the tee 22H-260.

(n) Attach the tee 22H-270 to the water heater 22H-070 and to the hose 22H-280.

(o) Attach the remaining parts of the infrared faucet assembly 22H-010 with the screws 22H-050, the washers 22H-060 and the nuts 22H-180.

(p) Attach the reducer elbow 22H-135 to the valve of the infrared faucet assembly 22H-010.

(q) Attach the hose 22H-080 to the water heater 22H-070 and to the reducer elbow 22H-135.

NOTE: For further instructions, see CMMV 38-12-16_0AJJ0 (water heater).

(r) Attach the hose 22H-090 to the tee 22H-270 and to the valve of the infrared faucet assembly 22H-010.

(s) Attach the hose 22H-090 and the clamps 22H-100 with the spacers 22H-110, the screws 22H-120 and the washers 22H-060.

(t) Attach the infrared faucet assembly 22H-010 with the screw 22H-020.

(u) Attach the ground cable in accordance with the Process and Material Specification PMS 01-04-58 to the infrared faucet assembly 22H-010.

(v) Connect the infrared faucet assembly 22H-010 to the water supply and to the electrical supply.

NOTE: For further instructions, see CMMV 38-20-20_80477 (infrared faucet assembly).

SUB TASK 25-41-51-440-043-B01
D2549010404000 D2549010614400 D2549020402200 D2549020407200 D2549020510400 D2549020713800 D2549020805400 D2549030404000 D2549030412000 D2549030613600

2. Assembly of the Potable Water System (22H-1)

(a) Attach the shutoff valve bracket 22H-220 with the screws 22H-360 and the washers 22H-370 to the shutoff valve 22H-240.

(b) Attach the shutoff valve bracket 22H-220, the shutoff valve rod 22H-140, the grommet 22H-150, the retaining ring 22H-190 and the bracket 22H-200 with the screws 22H-170 and the washers 22H-210 to the shutoff valve 22H-240 and to the lavatory structure.

(c) Attach the grommet 22H-150 and the bracket 22H-160 with the screws 22H-170, the washers 22H-060 and the nuts 22H-180 to the shutoff valve rod 22H-140 and to the lavatory structure.

(d) Attach the ground cable in accordance with the Process and Material Specification PMS 01-04-58 to the shutoff valve 22H-240.

(e) Attach the angle 22H-130 with the screws 22H-050 and the washers 22H-060 to the lavatory structure.

(f) Attach the brackets 22H-030 with the screws 22H-050 and the washers 22H-060 to the lavatory structure.

(g) Attach the water heater 22H-070 with the clamps 22H-040 to the brackets 22H-030.

(h) Attach the ground cable in accordance with the Process and Material Specification PMS 01-04-58 to the water heater 22H-070.

(i) Attach the tube 22H-290 to the shutoff valve 22H-240.

(j) Attach the tube 22H-290 and the clamp 22H-310 with the spacer 22H-330, the screw 22H-320 and the washer 22H-060.

(k) Attach the tee 22H-260 to the shutoff valve 22H-240.

(l) Attach the hose 22H-300 to the tee 22H-260.

(m) Attach the hose 22H-280 to the tee 22H-260.

(n) Attach the tee 22H-270 to the water heater 22H-070 and to the hose 22H-280.

(o) Attach the remaining parts of the water faucet assembly 22H-010 with the screws 22H-050, the washers 22H-060 and the nuts 22H-180.

(p) Attach the reducer elbow 22H-135 to the valve of the water faucet assembly 22H-010.

(q) Attach the hose 22H-080 to the water heater 22H-070 and to the reducer elbow 22H-135.

NOTE: For further instructions, see CMMV 38-12-16_0AJJ0 (water heater).

(r) Attach the hose 22H-090 to the tee 22H-270 and to the valve of the water faucet assembly 22H-010.

(s) Attach the hose 22H-090 and the clamps 22H-100 with the spacers 22H-110, the screws 22H-120 and the washers 22H-060.

(t) Attach the water faucet assembly 22H-010 with the screw 22H-020.

(u) Attach the ground cable in accordance with the Process and Material Specification PMS 01-04-58 to the water faucet assembly 22H-010.

(v) Connect the water faucet assembly 22H-010 to the water supply and to the electrical supply.

NOTE: For further instructions, see CMMV 38-20-20_80477 (water faucet assembly).

TASK 25-41-51-400-804-K01
D2547161903000

44. Assembly of the Potable Water System

A. General

This task gives you the installation and assembly procedures of the component.

B. Job Set-up Information

(1) Not applicable

C. Procedure

WARNING: BE CAREFUL WHEN YOU USE SOLVENTS/CLEANING AGENTS, SEALANTS AND OTHER MATERIALS. OBEY THE MATERIAL MANUFACTURER'S INSTRUCTIONS AND THE LOCAL REGULATIONS. MAKE SURE THAT THERE IS A GOOD FLOW OF AIR THROUGH THE WORK AREA. DO NOT BREATHE THE FUMES. DO NOT SMOKE. DO NOT USE THESE MATERIALS NEAR A FLAME, SPARKS OR SOURCES OF HEAT. USE PROTECTIVE CLOTHING, GOGGLES AND GLOVES. IF YOU GET ONE OF THESE MATERIALS ON YOUR SKIN OR IN YOUR EYES, FLUSH IT AWAY WITH A FLOW OF CLEAN WATER. IF YOU GET ONE OF THESE MATERIALS IN YOUR MOUTH, GET IMMEDIATE MEDICAL AID. IN GENERAL, THESE MATERIALS ARE POISONOUS, FLAMMABLE AND SKIN IRRITANTS.

CAUTION: DO ALL THE WORK ON A CLEAN, SOFT SURFACE TO PREVENT DAMAGE TO THE COMPONENTS.

CAUTION: MAKE SURE THAT ALL THE PARTS ARE CLEAN BEFORE YOU ASSEMBLE THEM.

SUB TASK 25-41-51-440-044-A01

1. Assembly of the Potable Water System (22J-1)

(a) Attach the bracket 22J-170 with the screws 22J-180 and the washers 22J-050 to the floor pan.

(b) Attach the shutoff valve 22J-130 with the screws 22J-140, 22J-230, the washers 22J-150, 22J-240, the lock washer 22J-250 and the nuts 22J-160, 22J-260 to the bracket 22J-170.

(c) Attach the ground cable in accordance with the Process and Material Specification PMS 01-04-58 to the shutoff valve 22J-130.

(d) Attach the brackets 22J-030 with the screws 22J-040 and the washers 22J-050 to the lavatory structure.

(e) Attach the water heater 22J-020 with the clamps 22J-060 to the brackets 22J-030.

(f) Attach the ground cable in accordance with the Process and Material Specification PMS 01-04-58 to the water heater 22J-020.

(g) Attach the tee 22J-080 to the water heater 22J-020.

(h) Attach the tube 22J-110 to the shutoff valve 22J-130.

(i) Attach the tee 22J-120 to the shutoff valve 22J-130.

(j) Attach the tube 22J-090 to the tees 22J-080, 22J-120.

(k) Attach the hose 22J-100 to the tee 22J-120.

(l) Attach the reducer elbow 22J-070 to the water heater 22J-020.

NOTE: For further instructions, see CMMV 38-12-16_0AJJ0 (water heater).

(m) Attach the water faucet assembly 22J-010.

(n) Attach the tube of the water faucet assembly 22J-010 to the tee 22J-080.

(o) Attach the tube of the water faucet assembly 22J-010 and the clamp 22J-200 with the spacer 22J-210, the screw 22J-220 and the washer 22J-050.

(p) Attach the tube of the water faucet assembly 22J-010 to the reducer elbow 22J-070.

(q) Attach the tubes of the water faucet assembly 22J-010 and the clamps 22J-200 with the spacer 22J-210, the screw 22J-190 and the washer 22J-050.

(r) Attach the ground cable in accordance with the Process and Material Specification PMS 01-04-58 to the water faucet assembly 22J-010.

(s) Connect the water faucet assembly 22J-010 to the water supply.

NOTE: For further instructions, see CMMV 38-11-03_C3207 (water faucet assembly).

TASK 25-41-51-400-804-L01
D2549020712000 D2549020712600 D2549030610200 D2549030701200

45. Assembly of the Potable Water System

A. General

This task gives you the installation and assembly procedures of the component.

B. Job Set-up Information

(1) Not applicable

C. Procedure

WARNING: BE CAREFUL WHEN YOU USE SOLVENTS/CLEANING AGENTS, SEALANTS AND OTHER MATERIALS. OBEY THE MATERIAL MANUFACTURER'S INSTRUCTIONS AND THE LOCAL REGULATIONS. MAKE SURE THAT THERE IS A GOOD FLOW OF AIR THROUGH THE WORK AREA. DO NOT BREATHE THE FUMES. DO NOT SMOKE. DO NOT USE THESE MATERIALS NEAR A FLAME, SPARKS OR SOURCES OF HEAT. USE PROTECTIVE CLOTHING, GOGGLES AND GLOVES. IF YOU GET ONE OF THESE MATERIALS ON YOUR SKIN OR IN YOUR EYES, FLUSH IT AWAY WITH A FLOW OF CLEAN WATER. IF YOU GET ONE OF THESE MATERIALS IN YOUR MOUTH, GET IMMEDIATE MEDICAL AID. IN GENERAL, THESE MATERIALS ARE POISONOUS, FLAMMABLE AND SKIN IRRITANTS.

CAUTION: DO ALL THE WORK ON A CLEAN, SOFT SURFACE TO PREVENT DAMAGE TO THE COMPONENTS.

CAUTION: MAKE SURE THAT ALL THE PARTS ARE CLEAN BEFORE YOU ASSEMBLE THEM.

SUB TASK 25-41-51-440-150-A01

1. Assembly of the Potable Water System (22K-1)

(a) Attach the shutoff valve bracket 22K-310 with the screws 22K-410 and the washers 22K-420 to the shutoff valve 22K-290.

(b) Attach the shutoff valve bracket 22K-310, the shutoff valve rod 22K-360, the grommet 22K-370, the retaining ring 22K-390 and the bracket 22K-340 with the screws 22K-400 and the washers 22K-300 to the shutoff valve 22K-290.

(c) Attach the grommet 22K-370 and the bracket 22K-350 with the screws 22K-400 and the washers 22K-170 to the shutoff valve rod 22K-360 and to the lavatory structure.

(d) Attach the ground cable in accordance with the Process and Material Specification PMS 01-04-58 to the shutoff valve 22K-290.

(e) Attach the tee 22K-380 to the shutoff valve 22K-290.

(f) Attach the tube 22K-110 to the shutoff valve 22K-290.

(g) Attach the tube 22K-110 and the clamp 22K-055 with the spacer 22K-070, the screw 22K-270 and the washer 22K-170.

(h) Attach the hose 22K-100 to the tee 22K-380.

(i) Attach the hose 22K-090 to the tee 22K-380.

(j) Attach the brackets 22K-030 and the spacers 22K-210 with the screws 22K-080 and the washers 22K-280 to the lavatory structure.

(k) Attach the water heater 22K-020 with the clamps 22K-060 to the brackets 22K-030.

(l) Attach the ground cable in accordance with the Process and Material Specification PMS 01-04-58 to the water heater 22K-020.

(m) Attach the tee 22K-120 to the water heater 22K-020 and to the hose 22K-090.

(n) Attach the reducer elbows 22K-040 to the valve of the water faucet assembly 22K-010.

(o) Attach the hose 22K-140 to the reducer elbow 22K-040 and to the water heater 22K-020.

NOTE: For further instructions, see CMMV 38-12-16_0AJJ0 (water heater).

(p) Attach the hose 22K-150 to the tee 22K-120 and to the reducer elbow 22K-040.

(q) Attach the hose 22K-150 and the clamp 22K-050 with the spacer 22K-070, the screw 22K-260 and the washer 22K-280.

(r) Attach the hose 22K-150 and the clamps 22K-050 with the spacers 22K-070, the screws 22K-270 and the washers 22K-280.

(s) Attach the water faucet assembly 22K-010 with the screws 22K-160, the washers 22K-170 and the nuts 22K-180.

(t) Attach the valve of the water faucet assembly 22K-010 with the screws 22K-240 and the washers 22K-280 to the lavatory structure.

(u) Attach the cover assembly 22K-190 with the screws 22K-240 and the washers 22K-280 to the lavatory structure.

(v) Attach the controller of the water faucet assembly 22K-010 with the screws 22K-240 and the washers 22K-280 to the lavatory structure.

(w) Attach the tube of the water faucet assembly 22K-010 and the clamps 22K-220 with the spacers 22K-230, the screws 22K-250 and the washers 22K-280.

(x) Attach the ground cable in accordance with the Process and Material Specification PMS 01-04-58 to the water faucet assembly 22K-010.

(y) Connect the water faucet assembly 22K-010 to the water supply and to the electrical supply.

NOTE: For further instructions, see CMMV 38-20-47_80477 (water faucet assembly).

TASK 25-41-51-400-805-A01

D2547161903000 D2549010500000 D2549010500400 D2549010500600 D2549010500800
D2549010501000 D2549010501200 D2549010501400 D2549010501600 D2549010501800
D2549010502000 D2549010502200 D2549010502400 D2549010502600 D2549010502800
D2549010503200 D2549010503400 D2549010503600 D2549010503800 D2549010504200
D2549010504400 D2549010504600 D2549010504800 D2549010505000 D2549010505200
D2549010505400 D2549010505600 D2549010505800 D2549010506000 D2549010506200
D2549010506400 D2549010506800 D2549010507000 D2549010507200 D2549010507400
D2549010507600 D2549010507800 D2549010508000 D2549010508200 D2549010508400
D2549010508600 D2549010508800 D2549010509000 D2549010509200 D2549010509400
D2549010509600 D2549010509800 D2549010510000 D2549010510200 D2549010510400
D2549010510800 D2549010511000 D2549010511200 D2549010511400 D2549010511600
D2549010511800 D2549010512000 D2549010512200 D2549010512400 D2549010513000
D2549010513200 D2549010513400 D2549010513600 D2549010513800 D2549010600000
D2549010600400 D2549020500000 D2549020500200 D2549020500400 D2549020500600
D2549020500800 D2549020501000 D2549020501200 D2549020501400 D2549020501600
D2549020501800 D2549020502000 D2549020502400 D2549020502600 D2549020502800
D2549020503000 D2549020503200 D2549020503400 D2549020503600 D2549020503800
D2549020504000 D2549020504200 D2549020504400 D2549020504600 D2549020504800
D2549020505000 D2549020505200 D2549020505400 D2549020505800 D2549020506000
D2549020506200 D2549020506400 D2549020600000 D2549020600200 D2549020600400
D2549020600800 D2549020601000 D2549020601200 D2549020601400 D2549020601600
D2549020601800 D2549020602000 D2549020602400 D2549020602600 D2549020602800
D2549020603000 D2549020603200 D2549020603400 D2549020603600 D2549020603800
D2549020604000 D2549020604200 D2549020604400 D2549020604600 D2549020604800
D2549020605000 D2549020605200 D2549020605400 D2549020605600 D2549020605800
D2549020606000 D2549020606400 D2549020606600 D2549020606800 D2549020607000
D2549020607200 D2549020607400 D2549020607600 D2549020607800 D2549020608200
D2549020608400 D2549020608600 D2549020608800 D2549020609000 D2549020609200
D2549020609400 D2549020609600 D2549020609800 D2549020610000 D2549020610200
D2549020610400 D2549020610600 D2549020610800 D2549020611000 D2549020611200
D2549020611400 D2549020611600 D2549020611800 D2549020701200 D2549020703200
D2549020708400 D2549030500200 D2549030500400 D2549030500600 D2549030500800
D2549030501000 D2549030501200 D2549030501400 D2549030501600 D2549030501800
D2549030502000 D2549030502200 D2549030502400 D2549030502600 D2549030502800
D2549030503000 D2549030503200 D2549030503400 D2549030503600 D2549030504000
D2549030504600 D2549030504800 D2549030505200 D2549030505400 D2549030505600
D2549030505800 D2549030506000 D2549030506200 D2549030506400 D2549030506600
D2549030506800 D2549030507000 D2549030507200 R225401107-000 R225401107-002
R225401107-004 R225401115-002 R225401128-000 R225401133-000 R225401134-000
R225401134-002 R225401134-004 R225401136-016 R225401137-000 R225401137-002
R225401137-010 R225401137-012 R225401139-000 R225401145-000 R225401146-000

R225401146-002 R225401159-000 R225401160-002 R225401172-002 R225401175-000
R225401176-000 R225401188-000 R225401188-002 R225401188-004 R225401188-006

46. Assembly of the Ventilation System

A. General

This task gives you the installation and assembly procedures of the component.

B. Job Set-up Information

(1) Not applicable

C. Procedure

WARNING: **BE CAREFUL WHEN YOU USE SOLVENTS/CLEANING AGENTS, SEALANTS AND OTHER MATERIALS. OBEY THE MATERIAL MANUFACTURER'S INSTRUCTIONS AND THE LOCAL REGULATIONS. MAKE SURE THAT THERE IS A GOOD FLOW OF AIR THROUGH THE WORK AREA. DO NOT BREATHE THE FUMES. DO NOT SMOKE. DO NOT USE THESE MATERIALS NEAR A FLAME, SPARKS OR SOURCES OF HEAT. USE PROTECTIVE CLOTHING, GOGGLES AND GLOVES. IF YOU GET ONE OF THESE MATERIALS ON YOUR SKIN OR IN YOUR EYES, FLUSH IT AWAY WITH A FLOW OF CLEAN WATER. IF YOU GET ONE OF THESE MATERIALS IN YOUR MOUTH, GET IMMEDIATE MEDICAL AID. IN GENERAL, THESE MATERIALS ARE POISONOUS, FLAMMABLE AND SKIN IRRITANTS.**

CAUTION: **DO ALL THE WORK ON A CLEAN, SOFT SURFACE TO PREVENT DAMAGE TO THE COMPONENTS.**

CAUTION: **MAKE SURE THAT ALL THE PARTS ARE CLEAN BEFORE YOU ASSEMBLE THEM.**

SUB TASK 25-41-51-440-045-A01

D2547161903000 D2549010500000 D2549010500400 D2549010500600
D2549010500800 D2549010501000 D2549010501200 D2549010501400
D2549010501600 D2549010501800 D2549010502000 D2549010502200
D2549010502400 D2549010502600 D2549010502800 D2549010503200
D2549010503400 D2549010503600 D2549010503800 D2549010504200
D2549010504400 D2549010504600 D2549010504800 D2549010505000
D2549010505200 D2549010505400 D2549010505600 D2549010505800
D2549010506000 D2549010506200 D2549010506400 D2549010506800
D2549010507000 D2549010507200 D2549010507400 D2549010507600
D2549010507800 D2549010508000 D2549010508200 D2549010508400
D2549010508600 D2549010508800 D2549010509000 D2549010509200
D2549010511200 D2549020500000 D2549020500200 D2549020500400

D2549020500600 D2549020500800 D2549020501000 D2549020501200
D2549020501400 D2549020501600 D2549020501800 D2549020502000
D2549020502400 D2549020502600 D2549020502800 D2549020503000
D2549020503200 D2549020503400 D2549020503600 D2549020503800
D2549020504000 D2549020504200 D2549020504400 D2549020504600
D2549020504800 D2549020505000 D2549020505200 D2549020505400
D2549020505800 D2549020506000 D2549020600000 D2549020600200
D2549020600800 D2549020601000 D2549020601200 D2549020601400
D2549020601600 D2549020601800 D2549020602000 D2549020602400
D2549020602600 D2549020602800 D2549020603000 D2549020603200
D2549020603400 D2549020603600 D2549020603800 D2549020604000
D2549020606400 D2549020606600 D2549020607200 D2549030500200
D2549030500400 D2549030500600 D2549030500800 D2549030501000
D2549030501200 D2549030501400 D2549030501600 D2549030501800
D2549030502000 D2549030502200 D2549030502400 D2549030502600
D2549030502800 D2549030503000 D2549030503200 D2549030503400
D2549030503600 R225401107-000 R225401107-002 R225401115-002 R225401133-000
R225401134-000 R225401139-000 R225401145-000 R225401146-000 R225401146-002
R225401188-000 R225401188-002 R225401188-004 R225401188-006

1. Assembly of the Ventilation System (21-1)

   (a) Attach the air extraction hood 21-130 and the air extraction grille 21-140 with the screws 21-210 to the ceiling panel.

   (b) Attach the air extraction bracket 21-150 with the screws 21-160 to the ceiling panel.

   (c) Attach the hose 21-200 with the clamps 21-190.

   (d) Attach the hose 21-080 with the clamp 21-051.

   (e) Attach the tube 21-070 with the clamp 21-050 to the hose 21-080.

   (f) Attach the tube 21-070 with the clamps 21-120, the screws 21-090 and the washers 21-100 to the lavatory rear wall.

   (g) Attach the hose 21-060 with the clamp 21-050 to the tube 21-070.

   (h) Attach the cap 21-040 with the clamp 21-050 to the hose 21-060.

(i) Attach the part of the individual air outlet 21-010 with the clamp 21-030 to the cap 21-040.

NOTE: For further instructions, see CMMV 21-24-19_59579 (individual air outlet).

NOTE: For further instructions, see CMMV 21-24-19_83564 (individual air outlet).

(j) Attach the part of the individual air outlet 21-010 to the service cabinet and to the part of the individual air outlet 21-010.

SUB TASK 25-41-51-440-045-B01
D2549020600400 R225401128-000

2. Assembly of the Ventilation System (21-1)

(a) Attach the air extraction hood 21-130 with the screws 21-210 to the ceiling panel.

(b) Attach the air extraction grille 21-140 with the screws 21-250 and the washers 21-260 to the ceiling panel.

(c) Attach the air extraction bracket 21-150 with the screws 21-160 to the ceiling panel.

(d) Attach the hose 21-200 with the clamps 21-190.

(e) Attach the hose 21-080 with the clamp 21-051.

(f) Attach the tube 21-070 with the clamp 21-050 to the hose 21-080.

(g) Attach the tube 21-070 with the clamps 21-120, the screws 21-090 and the washers 21-100 to the lavatory rear wall.

(h) Attach the hose 21-060 with the clamp 21-050 to the tube 21-070.

(i) Attach the cap 21-040 with the clamp 21-050 to the hose 21-060.

(j) Attach the part of the individual air outlet 21-010 with the clamp 21-030 to the cap 21-040.

NOTE: For further instructions, see CMMV 21-24-19_59579 (individual air outlet).

NOTE: For further instructions, see CMMV 21-24-19_83564 (individual air outlet).

(k) Attach the part of the individual air outlet 21-010 to the service cabinet and to the part of the individual air outlet 21-010.

SUB TASK 25-41-51-440-045-C01

D2549010509400 D2549010509600 D2549010509800 D2549010510000 D2549010510200 D2549010510400 D2549010510800 D2549010511000 D2549010511400 D2549010511600 D2549010511800 D2549010512000 D2549010512200 D2549010512400 D2549010513000 D2549010513200 D2549010513400 D2549010513600 D2549010513800 D2549010600000 D2549010600400 D2549020506200 D2549020506400 D2549020604200 D2549020604400 D2549020604600 D2549020604800 D2549020605000 D2549020605200 D2549020605400 D2549020605600 D2549020605800 D2549020606000 D2549020606800 D2549020607000 D2549020607400 D2549020607600 D2549020607800 D2549020608200 D2549020608400 D2549020608600 D2549020608800 D2549020609000 D2549020609200 D2549020609400 D2549020609600 D2549020609800 D2549020610000 D2549020610200 D2549020610400 D2549020610600 D2549020610800 D2549020611000 D2549020611200 D2549020611400 D2549020611600 D2549020611800 D2549020701200 D2549020703200 D2549020708400 D2549030504000 D2549030504600 D2549030504800 D2549030505200 D2549030505400 D2549030505600 D2549030505800 D2549030506000 D2549030506200 D2549030506400 D2549030506600 D2549030506800 D2549030507000 D2549030507200 R225401107-004 R225401134-002 R225401134-004 R225401136-016 R225401137-000 R225401137-002 R225401137-010 R225401137-012 R225401159-000 R225401160-002 R225401172-002 R225401175-000 R225401176-000

3. Assembly of the Ventilation System (21-1)

(a) Attach the air extraction hood 21-130 with the screws 21-210 to the ceiling panel.

(b) Attach the fleece 21-230, the grille 21-220 and the louver 21-140 with the screws 21-240 to the ceiling panel.

(c) Attach the air extraction bracket 21-150 with the screws 21-160 to the ceiling panel.

(d) Attach the hose 21-200 with the clamps 21-190.

(e) Attach the hose 21-080 with the clamp 21-051.

(f) Attach the tube 21-070 with the clamp 21-050 to the hose 21-080.

(g) Attach the tube 21-070 with the clamps 21-120, the screws 21-090 and the washers 21-100 to the lavatory rear wall.

(h) Attach the hose 21-060 with the clamp 21-050 to the tube 21-070.

(i) Attach the cap 21-040 with the clamp 21-050 to the hose 21-060.

(j) Attach the part of the individual air outlet 21-010 with the clamp 21-030 to the cap 21-040.

NOTE: For further instructions, see CMMV 21-24-19_59579 (individual air outlet).

NOTE: For further instructions, see CMMV 21-24-19_83564 (individual air outlet).

(k) Attach the part of the individual air outlet 21-010 to the service cabinet and to the part of the individual air outlet 21-010.

TASK 25-41-51-400-805-B01

D2549010510600 D2549010512600 D2549010514000 D2549010514200 D2549010514400
D2549010514600 D2549010514800 D2549010600200 D2549010600600 D2549010600800
D2549010601000 D2549010601200 D2549010601400 D2549010601600 D2549010601800
D2549010602000 D2549010602200 D2549010602400 D2549010602600 D2549010602800
D2549010603000 D2549010603200 D2549010603400 D2549010603600 D2549010603800
D2549010604000 D2549010604200 D2549010604400 D2549010604600 D2549010604800
D2549010605000 D2549010605200 D2549010605600 D2549010605800 D2549010606000
D2549010606200 D2549010606400 D2549010606600 D2549010606800 D2549010607000
D2549010607200 D2549010607400 D2549010607800 D2549010608200 D2549010608400
D2549010609000 D2549020502200 D2549020505600 D2549020506600 D2549020506800
D2549020507000 D2549020507200 D2549020507400 D2549020507600 D2549020507800
D2549020508000 D2549020508200 D2549020508400 D2549020508600 D2549020508800
D2549020509000 D2549020509200 D2549020509600 D2549020509800 D2549020510000
D2549020510400 D2549020511000 D2549020511200 D2549020511800 D2549020512000
D2549020512200 D2549020512400 D2549020512600 D2549020512800 D2549020513000
D2549020513200 D2549020514000 D2549020514200 D2549020514400 D2549020514600
D2549020514800 D2549020602200 D2549020612000 D2549020612200 D2549020612400
D2549020612600 D2549020612800 D2549020613000 D2549020613200 D2549020613600
D2549020613800 D2549020614000 D2549020614400 D2549020614600 D2549020614800
D2549020700000 D2549020700200 D2549020700400 D2549020700600 D2549020700800
D2549020701000 D2549020701400 D2549020701600 D2549020701800 D2549020702000
D2549020702200 D2549020702400 D2549020702600 D2549020702800 D2549020703400
D2549020703600 D2549020703800 D2549020704000 D2549020704200 D2549020704400
D2549020704600 D2549020704800 D2549020705000 D2549020705200 D2549020705400
D2549020705600 D2549020705800 D2549020706000 D2549020706200 D2549020706400
D2549020706600 D2549020706800 D2549020707000 D2549020707200 D2549020707400
D2549020707600 D2549020707800 D2549020708000 D2549020708200 D2549020708600
D2549020708800 D2549020709000 D2549020709200 D2549020709400 D2549020709600
D2549020709800 D2549020710000 D2549020710200 D2549020710400 D2549020710600
D2549020710800 D2549020711000 D2549020711200 D2549020711400 D2549020711600
D2549020712000 D2549020712200 D2549020712400 D2549020712600 D2549020712800
D2549020713000 D2549020713200 D2549020713400 D2549020713600 D2549020713800
D2549020714400 D2549020714600 D2549020801600 D2549020802800 D2549030503800
D2549030504200 D2549030507400 D2549030507600 D2549030507800 D2549030508000
D2549030508200 D2549030508400 D2549030508600 D2549030508800 D2549030509000
D2549030509200 D2549030509400 D2549030509600 D2549030509800 D2549030510000
D2549030510200 D2549030510400 D2549030510600 D2549030510800 D2549030511000
D2549030511200 D2549030511400 D2549030511600 D2549030511800 D2549030512000
D2549030512200 D2549030512400 D2549030512800 D2549030513000 D2549030513200
D2549030513400 D2549030513600 D2549030513800 D2549030514000 D2549030514200
D2549030514400 D2549030514600 D2549030514800 D2549030600000 D2549030600200
D2549030600400 D2549030600600 D2549030600800 D2549030601000 D2549030601200
D2549030601400 D2549030601600 D2549030601800 D2549030602000 D2549030602200
D2549030602400 D2549030602600 D2549030602800 D2549030603000 D2549030603400
D2549030603600 D2549030603800 D2549030604200 D2549030604400 D2549030604600
D2549030604800 D2549030605000 D2549030605200 D2549030605400 D2549030605600

D2549030605800 D2549030606000 D2549030606200 D2549030606400 D2549030606600
D2549030606800 D2549030607000 D2549030607200 D2549030607400 D2549030607600
D2549030607800 D2549030608000 D2549030608200 D2549030608400 D2549030608600
D2549030608800 D2549030609000 D2549030609200 D2549030610200 D2549030610600
D2549030611200 D2549030611400 D2549030611600 D2549030611800 D2549030612800
D2549030613200 D2549030613400 D2549030614200 D2549030614400 R225401115-000
R225401134-006 R225401134-008 R225401134-010 R225401134-016 R225401134-018
R225401134-020 R225401134-022 R225401134-024 R225401134-026 R225401134-028
R225401136-000 R225401136-010 R225401136-020 R225401136-022 R225401137-004
R225401137-006 R225401137-008 R225401137-014 R225401142-000 R225401142-002
R225401145-002 R225401145-004 R225401145-006 R225401145-012 R225401152-000
R225401152-002 R225401152-004 R225401152-006 R225401153-000 R225401160-000
R225401168-000 R225401168-002 R225401168-004 R225401168-006 R225401168-014
R225401168-016 R225401168-018 R225401168-020 R225401168-022 R225401168-028
R225401172-004 R225401172-006 R225401172-008 R225401172-010 R225401172-012
R225401172-014 R225401172-016 R225401175-002 R225401183-000 R225401183-008
R225401192-000 R225401195-000 R225401196-000 R225401196-002 R225401196-004
R225401196-034 R225401196-036 R225401196-046 R225401196-048 R225401196-050
R225401199-002 R225401600-000 R225401600-002 R225401603-000 R225401605-000
R225401605-002 R225401611-008 R225401613-000 R225401614-000 R225401618-000
R225401618-002 R225401619-000 R225401619-002 R225401625-000

47. Assembly of the Ventilation System

A. General

This task gives you the installation and assembly procedures of the component.

B. Job Set-up Information

(1) Not applicable

C. Procedure

WARNING: BE CAREFUL WHEN YOU USE SOLVENTS/CLEANING AGENTS, SEALANTS AND OTHER MATERIALS. OBEY THE MATERIAL MANUFACTURER'S INSTRUCTIONS AND THE LOCAL REGULATIONS. MAKE SURE THAT THERE IS A GOOD FLOW OF AIR THROUGH THE WORK AREA. DO NOT BREATHE THE FUMES. DO NOT SMOKE. DO NOT USE THESE MATERIALS NEAR A FLAME, SPARKS OR SOURCES OF HEAT. USE PROTECTIVE CLOTHING, GOGGLES AND GLOVES. IF YOU GET ONE OF THESE MATERIALS ON YOUR SKIN OR IN YOUR EYES, FLUSH IT AWAY WITH A FLOW OF CLEAN WATER. IF YOU GET ONE OF THESE MATERIALS IN YOUR MOUTH, GET IMMEDIATE MEDICAL AID. IN GENERAL, THESE MATERIALS ARE POISONOUS, FLAMMABLE AND SKIN IRRITANTS.

CAUTION: **DO ALL THE WORK ON A CLEAN, SOFT SURFACE TO PREVENT DAMAGE TO THE COMPONENTS.**

CAUTION: **MAKE SURE THAT ALL THE PARTS ARE CLEAN BEFORE YOU ASSEMBLE THEM.**

SUB TASK 25-41-51-440-046-A01

1. Assembly of the Ventilation System (21A-1)

   (a) Attach the air extraction hood 21A-130 with the screws 21A-200 to the ceiling panel.

   (b) Attach the fleece 21A-220, the grille 21A-210 and the louver 21A-140 with the screws 21A-230 to the ceiling panel.

   (c) Attach the air extraction bracket 21A-150 with the screws 21A-160 to the ceiling panel.

   (d) Attach the hose 21A-190 with the clamps 21A-180.

   (e) Attach the hose 21A-080 with the clamp 21A-050.

   (f) Attach the tube 21A-070 with the clamp 21A-040 to the hose 21A-080.

   (g) Attach the tube 21A-070 with the clamps 21A-120, the screws 21A-090 and the washers 21A-100 to the lavatory rear wall.

   (h) Attach the hose 21A-060 with the clamp 21A-040 to the tube 21A-070.

   (i) Attach the cap 21A-030 with the clamp 21A-040 to the hose 21A-060.

   (j) Attach the part of the individual air outlet 21A-010 with the clamp 21A-020 to the cap 21A-030.

   NOTE: **For further instructions, see CMMV 21-24-19_59579 (individual air outlet).**

   NOTE: **For further instructions, see CMMV 21-24-19_83564 (individual air outlet).**

   (k) Attach the part of the individual air outlet 21A-010 to the service cabinet and to the part of the individual air outlet 21A-010.

TASK 25-41-51-400-805-C01

D2547160900200 D2547160900400 D2549010400000 D2549010400200 D2549010400400
D2549010400600 D2549010400800 D2549010401000 D2549010401400 D2549010401600
D2549010401800 D2549010402000 D2549010402200 D2549010402400 D2549010402600
D2549010402800 D2549010403000 D2549010403200 D2549010403400 D2549010403600
D2549010403800 D2549010404000 D2549010404200 D2549010404400 D2549010404600
D2549010404800 D2549010405000 D2549010405200 D2549010405400 D2549010405600
D2549010405800 D2549010406000 D2549010406200 D2549010406400 D2549010406800
D2549010407000 D2549010607600 D2549010608600 D2549010608800 D2549010609200
D2549010609400 D2549010609600 D2549010609800 D2549010610000 D2549010610200
D2549010610400 D2549010610600 D2549010610800 D2549010611000 D2549010611200
D2549010611400 D2549010611600 D2549010611800 D2549010612000 D2549010612200
D2549010612400 D2549010612600 D2549010613000 D2549010613200 D2549010613400
D2549010613600 D2549010613800 D2549010614200 D2549010614400 D2549010614600
D2549010614800 D2549020300000 D2549020300400 D2549020300600 D2549020300800
D2549020301000 D2549020301600 D2549020301800 D2549020302000 D2549020302800
D2549020400000 D2549020400200 D2549020400400 D2549020400600 D2549020400800
D2549020401000 D2549020401200 D2549020401400 D2549020401600 D2549020402000
D2549020402200 D2549020402400 D2549020402600 D2549020403000 D2549020403200
D2549020403400 D2549020403600 D2549020403800 D2549020404000 D2549020404200
D2549020404400 D2549020404600 D2549020404800 D2549020405000 D2549020405200
D2549020405400 D2549020405600 D2549020405800 D2549020406000 D2549020406200
D2549020406400 D2549020406600 D2549020406800 D2549020407000 D2549020407200
D2549020407400 D2549020407600 D2549020407800 D2549020408000 D2549020408200
D2549020408600 D2549020408800 D2549020409000 D2549020409200 D2549020409400
D2549020409600 D2549020409800 D2549020410200 D2549020410400 D2549020410600
D2549020410800 D2549020411000 D2549020411200 D2549020411400 D2549020411600
D2549020411800 D2549020412000 D2549020412200 D2549020412400 D2549020412600
D2549020412800 D2549020413000 D2549020413200 D2549020413400 D2549020413600
D2549020413800 D2549020414000 D2549020414200 D2549020414600 D2549020414800
D2549020510600 D2549020510800 D2549020511600 D2549020513400 D2549020513600
D2549020513800 D2549020714000 D2549020800000 D2549020800200 D2549020800400
D2549020800600 D2549020800800 D2549020801000 D2549020801200 D2549020801400
D2549020801800 D2549020802000 D2549020802200 D2549020802400 D2549020802600
D2549020803000 D2549020803200 D2549020803400 D2549020803600 D2549020803800
D2549020804000 D2549020804200 D2549020804400 D2549020804800 D2549020805000
D2549020805200 D2549020805400 D2549020805600 D2549020805800 D2549020806000
D2549020806200 D2549020806400 D2549020806600 D2549020806800 D2549020807000
D2549020807200 D2549020807400 D2549020807600 D2549020807800 D2549020808200
D2549020808400 D2549020808600 D2549020808800 D2549020809000 D2549020809400
D2549020809600 D2549020809800 D2549020810000 D2549020810200 D2549020810400
D2549020810600 D2549020810800 D2549020811200 D2549020811400 D2549020811600
D2549020811800 D2549020812000 D2549020812200 D2549020812400 D2549020812600
D2549020812800 D2549020813000 D2549020813200 D2549020813400 D2549020813600
D2549020813800 D2549020814000 D2549020814200 D2549020814400 D2549020814600
D2549020814800 D2549030400000 D2549030400200 D2549030400400 D2549030400600
D2549030401000 D2549030401200 D2549030401400 D2549030401600 D2549030401800

D2549030402000 D2549030402200 D2549030402400 D2549030402600 D2549030402800
D2549030403000 D2549030403400 D2549030403600 D2549030403800 D2549030404000
D2549030404200 D2549030404400 D2549030404600 D2549030404800 D2549030405000
D2549030405200 D2549030405400 D2549030405600 D2549030405800 D2549030406000
D2549030406400 D2549030406600 D2549030406800 D2549030407000 D2549030407200
D2549030407400 D2549030407600 D2549030407800 D2549030408000 D2549030408200
D2549030408400 D2549030408600 D2549030409000 D2549030409200 D2549030409400
D2549030409600 D2549030409800 D2549030410000 D2549030410200 D2549030410400
D2549030410600 D2549030410800 D2549030411200 D2549030411400 D2549030411600
D2549030411800 D2549030412000 D2549030412200 D2549030412400 D2549030412600
D2549030412800 D2549030413000 D2549030413200 D2549030413400 D2549030413600
D2549030414000 D2549030414200 D2549030414400 D2549030414600 D2549030414800
D2549030603200 D2549030609800 D2549030610000 D2549030610400 D2549030611000
D2549030612000 D2549030612200 D2549030612400 D2549030612600 D2549030613600
D2549030613800 D2549030614000 D2549030614600 D2549030614800 D2549030700000
D2549030700200 D2549030700400 D2549030700600 D2549030700800 D2549030701000
D2549030701200 D2549030701400 D2549030701600 D2549030701800 D2549030702000
D2549030702200 D2549030702400 D2549030702600 D2549030702800 D2549030703000
D2549030703200 D2549030703400 D2549030703600 D2549030703800 D2549030704000
D2549030704200 D2549030704400 D2549030704600 D2549030704800 D2549030705200
D2549030705600 D2549040500200 D2549040500400 D2549040500600 D2549040500800
D2549040501000 D2549040501200 D2549040501400 D2549040501600 D2549040501800
D2549040502000 R225401134-012 R225401134-014 R225401134-030 R225401134-032
R225401134-034 R225401134-036 R225401134-038 R225401136-004 R225401136-006
R225401136-008 R225401136-012 R225401136-014 R225401136-018 R225401136-024
R225401137-016 R225401145-008 R225401145-010 R225401145-014 R225401152-008
R225401152-010 R225401168-008 R225401168-010 R225401168-012 R225401168-024
R225401168-026 R225401172-000 R225401172-018 R225401183-002 R225401183-004
R225401183-006 R225401192-002 R225401196-006 R225401196-008 R225401196-010
R225401196-012 R225401196-014 R225401196-016 R225401196-018 R225401196-020
R225401196-022 R225401196-024 R225401196-038 R225401196-040 R225401196-042
R225401196-044 R225401196-052 R225401196-054 R225401196-056 R225401196-058
R225401196-060 R225401196-062 R225401196-064 R225401196-066 R225401196-068
R225401196-070 R225401199-000 R225401199-004 R225401199-006 R225401199-008
R225401199-010 R225401199-012 R225401600-004 R225401602-000 R225401609-000
R225401611-000 R225401611-006 R225401611-010 R225401611-012 R225401611-014
R225401611-016 R225401611-018 R225401611-020 R225401622-000 R225401622-002
R225401624-000 R225401627-000 R225401627-002 R225401627-004 R225401629-000
R225401629-002 R225401639-000 R225401639-002 R225401643-000 R225401643-002
R225401643-004 R225401643-006 R225401643-008 R225401646-000 R225401646-002
R225401647-000 R225401648-000 R225401648-002 R225401648-004 R225401648-006
R225401648-008 R225401649-000 R225401656-000 R225401656-002 R225401658-000
R225401662-000 R225401662-002 R225401671-000 R225401671-002 R225401673-000
R225401673-002 R225401673-004 R225401673-006 R225401675-000 R225401676-000
R225401683-000 R225401685-000 R225401685-002 R225401688-000 R225401689-004
R225401689-006 R225401691-000 R225401691-002 R225401693-000 R225401697-000

R225401697-002 R225401803-000 R225401803-002 R225401808-000 R225401811-000 R225401814-000

48. Assembly of the Ventilation System

A. General

This task gives you the installation and assembly procedures of the component.

B. Job Set-up Information

(1) Not applicable

C. Procedure

WARNING: **BE CAREFUL WHEN YOU USE SOLVENTS/CLEANING AGENTS, SEALANTS AND OTHER MATERIALS. OBEY THE MATERIAL MANUFACTURER'S INSTRUCTIONS AND THE LOCAL REGULATIONS. MAKE SURE THAT THERE IS A GOOD FLOW OF AIR THROUGH THE WORK AREA. DO NOT BREATHE THE FUMES. DO NOT SMOKE. DO NOT USE THESE MATERIALS NEAR A FLAME, SPARKS OR SOURCES OF HEAT. USE PROTECTIVE CLOTHING, GOGGLES AND GLOVES. IF YOU GET ONE OF THESE MATERIALS ON YOUR SKIN OR IN YOUR EYES, FLUSH IT AWAY WITH A FLOW OF CLEAN WATER. IF YOU GET ONE OF THESE MATERIALS IN YOUR MOUTH, GET IMMEDIATE MEDICAL AID. IN GENERAL, THESE MATERIALS ARE POISONOUS, FLAMMABLE AND SKIN IRRITANTS.**

CAUTION: **DO ALL THE WORK ON A CLEAN, SOFT SURFACE TO PREVENT DAMAGE TO THE COMPONENTS.**

CAUTION: **MAKE SURE THAT ALL THE PARTS ARE CLEAN BEFORE YOU ASSEMBLE THEM.**

SUB TASK 25-41-51-440-047-A01

1. Assembly of the Ventilation System (21B-1)

(a) Attach the air extraction hood 21B-130 with the screws 21B-200 to the ceiling panel.

(b) Attach the fleece 21B-220, the grille 21B-210 and the louver 21B-140 with the screws 21B-230 to the ceiling panel.

(c) Attach the air extraction bracket 21B-150 with the screws 21B-160 to the ceiling panel.

(d) Attach the hose 21B-190 with the clamps 21B-180.

(e) Attach the hose 21B-080 with the clamp 21B-050.

(f) Attach the tube 21B-070 with the clamp 21B-040 to the hose 21B-080.

(g) Attach the tube 21B-070 with the clamps 21B-120, the screws 21B-090 and the washers 21B-100 to the lavatory rear wall.

(h) Attach the hose 21B-060 with the clamp 21B-040 to the tube 21B-070.

(i) Attach the cap 21B-030 with the clamp 21B-040 to the hose 21B-060.

(j) Attach the part of the individual air outlet 21B-010 with the clamp 21B-020 to the cap 21B-030 .

NOTE: For further instructions, see CMMV 21-24-19_59579 (individual air outlet).

NOTE: For further instructions, see CMMV 21-24-19_83564 (individual air outlet).

(k) Attach the part of the individual air outlet 21B-010 to the service cabinet and to the part of the individual air outlet 21B-010.

TASK 25-41-51-400-806-A01

D2549010500000 D2549010500600 D2549010500800 D2549010501200 D2549010501400
D2549010501800 D2549010502200 D2549010502600 D2549010503200 D2549010503600
D2549010503800 D2549010504200 D2549010504400 D2549010504600 D2549010504800
D2549010505000 D2549010505200 D2549010505400 D2549010505600 D2549010505800
D2549010506000 D2549010506400 D2549010507200 D2549010507400 D2549010507600
D2549010507800 D2549010508000 D2549010508200 D2549010508400 D2549010508600
D2549010508800 D2549010509200 D2549010509600 D2549010510000 D2549010510400
D2549010510800 D2549010511000 D2549010511400 D2549010511600 D2549010512400
D2549010513000 D2549010513400 D2549020500000 D2549020500200 D2549020500400
D2549020500600 D2549020500800 D2549020501000 D2549020501200 D2549020501400
D2549020501800 D2549020502000 D2549020502400 D2549020502600 D2549020502800
D2549020503200 D2549020503600 D2549020504000 D2549020504200 D2549020504600
D2549020504800 D2549020505000 D2549020505200 D2549020506000 D2549020506200
D2549020506400 D2549020600000 D2549020600200 D2549020600800 D2549020601000
D2549020601200 D2549020601400 D2549020601600 D2549020601800 D2549020602400
D2549020602600 D2549020603200 D2549020603400 D2549020603600 D2549020603800
D2549020604000 D2549020604200 D2549020604400 D2549020604600 D2549020604800
D2549020605200 D2549020605400 D2549020605800 D2549020606000 D2549020606400
D2549020606600 D2549020606800 D2549020607000 D2549020607200 D2549020607400
D2549020607600 D2549020607800 D2549020608600 D2549020608800 D2549020609000
D2549020609400 D2549020609600 D2549020609800 D2549020610400 D2549020610600
D2549020610800 D2549020611000 D2549020611200 D2549020611400 D2549020611800
D2549020701200 D2549030500400 D2549030500600 D2549030500800 D2549030501000
D2549030501200 D2549030501400 D2549030501800 D2549030502000 D2549030502400
D2549030502600 D2549030502800 D2549030503000 D2549030503400 D2549030503600
D2549030504000 D2549030504600 D2549030504800 D2549030505200 D2549030505400
D2549030505600 D2549030505800 D2549030506200 D2549030506400 D2549030506600
D2549030506800 D2549030507000 D2549030507200 R225401133-000 R225401137-000
R225401137-002 R225401137-010 R225401139-000 R225401145-000 R225401146-000
R225401146-002 R225401159-000 R225401172-002 R225401176-000 R225401188-000
R225401188-002 R225401188-004 R225401188-006

49. Assembly and Installation of the Nursing Table

A. General

This task gives you the installation and assembly procedures of the component.

B. Procedure

WARNING: **BE CAREFUL WHEN YOU USE SOLVENTS/CLEANING AGENTS, SEALANTS AND OTHER MATERIALS. OBEY THE MATERIAL MANUFACTURER'S INSTRUCTIONS AND THE LOCAL REGULATIONS. MAKE SURE THAT THERE IS A GOOD FLOW OF AIR THROUGH THE WORK AREA. DO NOT BREATHE THE FUMES. DO NOT SMOKE. DO NOT USE THESE MATERIALS NEAR A FLAME, SPARKS OR SOURCES OF HEAT. USE PROTECTIVE CLOTHING, GOGGLES AND GLOVES. IF YOU GET ONE OF THESE MATERIALS ON YOUR SKIN OR IN YOUR EYES, FLUSH IT AWAY WITH A FLOW OF CLEAN WATER. IF YOU GET ONE OF THESE MATERIALS IN YOUR MOUTH, GET IMMEDIATE MEDICAL AID. IN GENERAL, THESE MATERIALS ARE POISONOUS, FLAMMABLE AND SKIN IRRITANTS.**

CAUTION: **DO ALL THE WORK ON A CLEAN, SOFT SURFACE TO PREVENT DAMAGE TO THE COMPONENTS.**

CAUTION: **MAKE SURE THAT ALL THE PARTS ARE CLEAN BEFORE YOU ASSEMBLE THEM.**

SUB TASK 25-41-51-400-101-A01

1. Assembly and Installation of the Nursing Table (20-1)

   (a) Install and assemble the nursing table assembly 20-010 as follows:

      1 Attach the swivel levers 20-030, 20-040 with the bushings 20-080 and the washers 20-085, 20-090 to the nursing table assembly 20-010.

      2 Attach the swivel levers 20-050, 20-060 with the bushings 20-110 and the washers 20-085, 20-100 to the nursing table assembly 20-010.

      3 Attach the lateral guides 20-013, 20-015 with the washers 20-085, 20-090 and the bushings 20-080 to the swivel levers 20-030, 20-040, 20-050, 20-060.

      4 Attach the stops 20-020 with the screws 20-120 to the lateral guides 20-013, 20-015.

      5 Attach the lateral guides 20-013, 20-015 with the screws 20-150 to the lavatory structure.

      6 Attach the rollers 20-070 with the screws 20-140 and the spacers 20-130 to the lateral guides 20-013, 20-015.

TASK 25-41-51-400-806-B01

D2547160900200 D2547160900400 D2547161903000 D2549010400000 D2549010400200
D2549010400400 D2549010400600 D2549010400800 D2549010401000 D2549010401400
D2549010401600 D2549010402000 D2549010402200 D2549010402400 D2549010402600
D2549010402800 D2549010403000 D2549010403200 D2549010403400 D2549010403600
D2549010403800 D2549010404000 D2549010404200 D2549010404400 D2549010404600
D2549010404800 D2549010405000 D2549010405200 D2549010405400 D2549010405800
D2549010406000 D2549010406200 D2549010406400 D2549010406800 D2549010407000
D2549010500400 D2549010501000 D2549010501600 D2549010502000 D2549010502400
D2549010502800 D2549010503400 D2549010506200 D2549010506800 D2549010507000
D2549010509000 D2549010509400 D2549010509800 D2549010510200 D2549010510600
D2549010511200 D2549010511800 D2549010512000 D2549010512200 D2549010512600
D2549010513200 D2549010513600 D2549010513800 D2549010514000 D2549010514200
D2549010514400 D2549010514600 D2549010514800 D2549010600000 D2549010600200
D2549010600400 D2549010600600 D2549010600800 D2549010601000 D2549010601200
D2549010601400 D2549010601600 D2549010601800 D2549010602000 D2549010602200
D2549010602400 D2549010602600 D2549010602800 D2549010603000 D2549010603200
D2549010603400 D2549010603600 D2549010603800 D2549010604000 D2549010604200
D2549010604400 D2549010604600 D2549010604800 D2549010605000 D2549010605200
D2549010605600 D2549010605800 D2549010606000 D2549010606200 D2549010606400
D2549010606600 D2549010606800 D2549010607000 D2549010607200 D2549010607400
D2549010607600 D2549010607800 D2549010608200 D2549010608400 D2549010608600
D2549010608800 D2549010609000 D2549010609200 D2549010609400 D2549010609600
D2549010609800 D2549010610000 D2549010610200 D2549010610400 D2549010610600
D2549010610800 D2549010611000 D2549010611200 D2549010611400 D2549010611600
D2549010611800 D2549010612000 D2549010612200 D2549010612400 D2549010612600
D2549010613000 D2549010613400 D2549010613600 D2549010613800 D2549010614200
D2549010614400 D2549010614600 D2549010614800 D2549020300400 D2549020300600
D2549020300800 D2549020301000 D2549020301800 D2549020302000 D2549020302800
D2549020400000 D2549020400200 D2549020400400 D2549020400600 D2549020401000
D2549020401200 D2549020401400 D2549020401600 D2549020402000 D2549020402200
D2549020402400 D2549020402600 D2549020403000 D2549020403200 D2549020403400
D2549020403600 D2549020403800 D2549020404000 D2549020404200 D2549020404400
D2549020404600 D2549020404800 D2549020405000 D2549020405200 D2549020405400
D2549020405600 D2549020405800 D2549020406000 D2549020406200 D2549020406400
D2549020406600 D2549020406800 D2549020407000 D2549020407200 D2549020407400
D2549020407600 D2549020407800 D2549020408000 D2549020408200 D2549020408600
D2549020408800 D2549020409000 D2549020409200 D2549020409400 D2549020409600
D2549020409800 D2549020410200 D2549020410400 D2549020410600 D2549020410800
D2549020411000 D2549020411400 D2549020411600 D2549020412000 D2549020412400
D2549020412600 D2549020412800 D2549020413000 D2549020413200 D2549020413400
D2549020413600 D2549020413800 D2549020414000 D2549020414200 D2549020414600
D2549020501600 D2549020502200 D2549020503000 D2549020503400 D2549020503800
D2549020504400 D2549020505400 D2549020505600 D2549020505800 D2549020506600
D2549020506800 D2549020507000 D2549020507200 D2549020507400 D2549020507600
D2549020507800 D2549020508000 D2549020508200 D2549020508400 D2549020508600
D2549020508800 D2549020509000 D2549020509200 D2549020509800 D2549020510000

D2549020510400 D2549020510800 D2549020511000 D2549020511200 D2549020511600
D2549020511800 D2549020512000 D2549020512200 D2549020512400 D2549020512600
D2549020512800 D2549020513000 D2549020513200 D2549020513400 D2549020513600
D2549020513800 D2549020514000 D2549020514200 D2549020514400 D2549020514600
D2549020514800 D2549020600400 D2549020602000 D2549020602200 D2549020602800
D2549020603000 D2549020605000 D2549020605600 D2549020608200 D2549020608400
D2549020609200 D2549020610000 D2549020610200 D2549020611600 D2549020612000
D2549020612200 D2549020612400 D2549020612600 D2549020612800 D2549020613000
D2549020613200 D2549020613600 D2549020613800 D2549020614000 D2549020614400
D2549020614600 D2549020614800 D2549020700000 D2549020700200 D2549020700400
D2549020700600 D2549020700800 D2549020701000 D2549020701400 D2549020701600
D2549020701800 D2549020702000 D2549020702200 D2549020702400 D2549020702600
D2549020702800 D2549020703200 D2549020703400 D2549020703600 D2549020703800
D2549020704000 D2549020704200 D2549020704400 D2549020704600 D2549020704800
D2549020705000 D2549020705200 D2549020705400 D2549020705600 D2549020705800
D2549020706000 D2549020706200 D2549020706400 D2549020706600 D2549020706800
D2549020707000 D2549020707200 D2549020707400 D2549020707600 D2549020707800
D2549020708000 D2549020708200 D2549020708400 D2549020708600 D2549020708800
D2549020709000 D2549020709200 D2549020709400 D2549020709600 D2549020709800
D2549020710200 D2549020710400 D2549020710600 D2549020710800 D2549020711000
D2549020711200 D2549020711400 D2549020711600 D2549020712200 D2549020712400
D2549020712800 D2549020713200 D2549020713400 D2549020713600 D2549020713800
D2549020714000 D2549020714400 D2549020714600 D2549020800000 D2549020800200
D2549020800400 D2549020800600 D2549020800800 D2549020801000 D2549020801200
D2549020801400 D2549020801600 D2549020801800 D2549020802000 D2549020802200
D2549020802600 D2549020802800 D2549020803000 D2549020803200 D2549020803400
D2549020803600 D2549020803800 D2549020804000 D2549020804200 D2549020804400
D2549020804800 D2549020805000 D2549020805400 D2549020805600 D2549020805800
D2549020806000 D2549020806200 D2549020806600 D2549020806800 D2549020807000
D2549020807200 D2549020807400 D2549020807600 D2549020807800 D2549020808200
D2549020808400 D2549020808600 D2549020808800 D2549020809000 D2549020809400
D2549020809600 D2549020809800 D2549020810000 D2549020810200 D2549020810400
D2549020810600 D2549020810800 D2549020811200 D2549020811400 D2549020811600
D2549020811800 D2549020812000 D2549020812200 D2549020812400 D2549020812600
D2549020812800 D2549020813000 D2549020813400 D2549020813600 D2549020813800
D2549020814000 D2549020814200 D2549020814400 D2549020814600 D2549020814800
D2549030400000 D2549030400200 D2549030400400 D2549030400600 D2549030401000
D2549030401200 D2549030401400 D2549030401600 D2549030401800 D2549030402000
D2549030402200 D2549030402400 D2549030402600 D2549030402800 D2549030403000
D2549030403400 D2549030403600 D2549030403800 D2549030404000 D2549030404200
D2549030404400 D2549030404600 D2549030404800 D2549030405000 D2549030405200
D2549030405400 D2549030405600 D2549030405800 D2549030406000 D2549030406400
D2549030406600 D2549030406800 D2549030407000 D2549030407200 D2549030407400
D2549030407600 D2549030407800 D2549030408000 D2549030408400 D2549030409000
D2549030409200 D2549030409800 D2549030410000 D2549030410400 D2549030411200
D2549030411400 D2549030411600 D2549030411800 D2549030412000 D2549030412400
D2549030412600 D2549030412800 D2549030413000 D2549030413200 D2549030413600

D2549030414400 D2549030414800 D2549030500200 D2549030501600 D2549030502200
D2549030503200 D2549030503800 D2549030504200 D2549030506000 D2549030507400
D2549030507600 D2549030507800 D2549030508000 D2549030508200 D2549030508400
D2549030508600 D2549030508800 D2549030509000 D2549030509200 D2549030509400
D2549030509600 D2549030509800 D2549030510000 D2549030510200 D2549030510400
D2549030510600 D2549030510800 D2549030511000 D2549030511200 D2549030511400
D2549030511600 D2549030511800 D2549030512000 D2549030512200 D2549030512400
D2549030512800 D2549030513000 D2549030513200 D2549030513400 D2549030513600
D2549030513800 D2549030514000 D2549030514200 D2549030514400 D2549030514600
D2549030514800 D2549030600000 D2549030600200 D2549030600400 D2549030600600
D2549030600800 D2549030601000 D2549030601200 D2549030601400 D2549030601600
D2549030601800 D2549030602000 D2549030602200 D2549030602400 D2549030602600
D2549030602800 D2549030603000 D2549030603200 D2549030603400 D2549030603600
D2549030603800 D2549030604200 D2549030604400 D2549030604600 D2549030604800
D2549030605000 D2549030605200 D2549030605400 D2549030605600 D2549030605800
D2549030606000 D2549030606200 D2549030606400 D2549030606600 D2549030606800
D2549030607000 D2549030607200 D2549030607400 D2549030607600 D2549030607800
D2549030608000 D2549030608200 D2549030608400 D2549030608600 D2549030608800
D2549030609000 D2549030609200 D2549030609800 D2549030610000 D2549030610200
D2549030610400 D2549030610600 D2549030611000 D2549030611200 D2549030611400
D2549030611600 D2549030611800 D2549030612000 D2549030612200 D2549030612400
D2549030612600 D2549030612800 D2549030613200 D2549030613400 D2549030613600
D2549030613800 D2549030614000 D2549030614200 D2549030614400 D2549030614800
D2549030700000 D2549030700200 D2549030700400 D2549030700800 D2549030701000
D2549030701200 D2549030701400 D2549030702200 D2549030702400 D2549030702600
D2549030702800 D2549030703000 D2549030703400 D2549030703600 D2549030703800
D2549030704600 D2549030705200 D2549040500200 D2549040500400 D2549040500600
D2549040500800 D2549040501000 D2549040501200 D2549040501400 D2549040501600
D2549040501800 D2549040502000 R225401107-000 R225401107-002 R225401107-004
R225401115-000 R225401115-002 R225401128-000 R225401134-000 R225401134-002
R225401134-004 R225401134-006 R225401134-008 R225401134-010 R225401134-012
R225401134-014 R225401134-016 R225401134-018 R225401134-020 R225401134-022
R225401134-024 R225401134-026 R225401134-028 R225401134-030 R225401134-032
R225401134-034 R225401134-036 R225401134-038 R225401136-000 R225401136-004
R225401136-006 R225401136-008 R225401136-010 R225401136-012 R225401136-014
R225401136-016 R225401136-018 R225401136-020 R225401136-022 R225401136-024
R225401137-004 R225401137-006 R225401137-008 R225401137-012 R225401137-014
R225401137-016 R225401142-000 R225401142-002 R225401145-002 R225401145-004
R225401145-006 R225401145-008 R225401145-010 R225401145-012 R225401145-014
R225401152-000 R225401152-002 R225401152-004 R225401152-006 R225401152-008
R225401152-010 R225401153-000 R225401160-000 R225401160-002 R225401168-000
R225401168-002 R225401168-004 R225401168-006 R225401168-008 R225401168-010
R225401168-012 R225401168-014 R225401168-016 R225401168-018 R225401168-020
R225401168-022 R225401168-024 R225401168-026 R225401168-028 R225401172-000
R225401172-004 R225401172-006 R225401172-008 R225401172-010 R225401172-012
R225401172-014 R225401172-016 R225401172-018 R225401175-000 R225401175-002
R225401183-000 R225401183-002 R225401183-004 R225401183-006 R225401183-008

R225401192-000 R225401192-002 R225401195-000 R225401196-000 R225401196-002
R225401196-004 R225401196-006 R225401196-008 R225401196-010 R225401196-012
R225401196-014 R225401196-016 R225401196-018 R225401196-020 R225401196-022
R225401196-024 R225401196-034 R225401196-036 R225401196-038 R225401196-040
R225401196-042 R225401196-044 R225401196-046 R225401196-048 R225401196-050
R225401196-052 R225401196-054 R225401196-056 R225401196-058 R225401196-060
R225401196-062 R225401196-064 R225401196-066 R225401196-068 R225401196-070
R225401199-000 R225401199-002 R225401199-004 R225401199-006 R225401199-008
R225401199-010 R225401199-012 R225401600-000 R225401600-002 R225401600-004
R225401602-000 R225401603-000 R225401605-000 R225401605-002 R225401609-000
R225401611-000 R225401611-006 R225401611-008 R225401611-010 R225401611-012
R225401611-014 R225401611-016 R225401611-018 R225401611-020 R225401614-000
R225401618-000 R225401618-002 R225401619-000 R225401619-002 R225401622-000
R225401622-002 R225401624-000 R225401625-000 R225401627-000 R225401627-002
R225401627-004 R225401629-000 R225401629-002 R225401639-000 R225401639-002
R225401643-000 R225401643-002 R225401643-004 R225401643-006 R225401643-008
R225401646-000 R225401646-002 R225401647-000 R225401648-000 R225401648-002
R225401648-004 R225401648-006 R225401648-008 R225401649-000 R225401656-000
R225401656-002 R225401658-000 R225401662-000 R225401662-002 R225401673-000
R225401673-002 R225401673-004 R225401673-006 R225401676-000 R225401683-000
R225401685-000 R225401685-002 R225401688-000 R225401689-004 R225401689-006
R225401691-000 R225401691-002 R225401693-000 R225401697-000 R225401697-002
R225401803-000 R225401803-002 R225401811-000

50. Assembly and Installation of the Nursing Table

A. General

This task gives you the installation and assembly procedures of the component.

B. Procedure

WARNING: **BE CAREFUL WHEN YOU USE SOLVENTS/CLEANING AGENTS, SEALANTS AND OTHER MATERIALS. OBEY THE MATERIAL MANUFACTURER'S INSTRUCTIONS AND THE LOCAL REGULATIONS. MAKE SURE THAT THERE IS A GOOD FLOW OF AIR THROUGH THE WORK AREA. DO NOT BREATHE THE FUMES. DO NOT SMOKE. DO NOT USE THESE MATERIALS NEAR A FLAME, SPARKS OR SOURCES OF HEAT. USE PROTECTIVE CLOTHING, GOGGLES AND GLOVES. IF YOU GET ONE OF THESE MATERIALS ON YOUR SKIN OR IN YOUR EYES, FLUSH IT AWAY WITH A FLOW OF CLEAN WATER. IF YOU GET ONE OF THESE MATERIALS IN YOUR MOUTH, GET IMMEDIATE MEDICAL AID. IN GENERAL, THESE MATERIALS ARE POISONOUS, FLAMMABLE AND SKIN IRRITANTS.**

CAUTION: **DO ALL THE WORK ON A CLEAN, SOFT SURFACE TO PREVENT DAMAGE TO THE COMPONENTS.**

CAUTION: **MAKE SURE THAT ALL THE PARTS ARE CLEAN BEFORE YOU ASSEMBLE THEM.**

SUB TASK 25-41-51-400-102-A01

1. Assembly and Installation of the Nursing Table (20A-1)

   (a) Assemble the nursing table assembly 20A-010 as follows:

      1 Attach the bumpers 20A-060, 20A-070 with the adhesive [FASTBOND 10].

      2 Attach the latch assembly 20A-020 with the screws 20A-030.

      3 Attach the hinge 20A-040 with the screws 20A-030.

   (b) Attach the nursing table assembly 20A-010 with the screws 20A-090 to the lavatory structure.

   (c) Attach the hook assembly 20A-080 with the screws 20A-090, 20A-092 to the lavatory structure.

TASK 25-41-51-400-806-C01

D2549010401800 D2549010405600 D2549010613200 D2549020300000 D2549020301600 D2549020411200 D2549020411800 D2549020412200 D2549020414800 D2549020509600 D2549020510600 D2549020710000 D2549020713000 D2549020802400 D2549020805200 D2549020806400 D2549030408200 D2549030408600 D2549030409400 D2549030409600 D2549030410200 D2549030410600 D2549030410800 D2549030412200 D2549030413400 D2549030414000 D2549030414200 D2549030414600 D2549030614600 D2549030700600 D2549030701600 D2549030701800 D2549030702000 D2549030703200 D2549030704000 D2549030704200 D2549030704400 D2549030704800 D2549030705600 R225401613-000 R225401671-000 R225401671-002 R225401675-000 R225401808-000 R225401814-000

51. Assembly and Installation of the Nursing Table

A. General

This task gives you the installation and assembly procedures of the component.

B. Procedure

WARNING: BE CAREFUL WHEN YOU USE SOLVENTS/CLEANING AGENTS, SEALANTS AND OTHER MATERIALS. OBEY THE MATERIAL MANUFACTURER'S INSTRUCTIONS AND THE LOCAL REGULATIONS. MAKE SURE THAT THERE IS A GOOD FLOW OF AIR THROUGH THE WORK AREA. DO NOT BREATHE THE FUMES. DO NOT SMOKE. DO NOT USE THESE MATERIALS NEAR A FLAME, SPARKS OR SOURCES OF HEAT. USE PROTECTIVE CLOTHING, GOGGLES AND GLOVES. IF YOU GET ONE OF THESE MATERIALS ON YOUR SKIN OR IN YOUR EYES, FLUSH IT AWAY WITH A FLOW OF CLEAN WATER. IF YOU GET ONE OF THESE MATERIALS IN YOUR MOUTH, GET IMMEDIATE MEDICAL AID. IN GENERAL, THESE MATERIALS ARE POISONOUS, FLAMMABLE AND SKIN IRRITANTS.

CAUTION: DO ALL THE WORK ON A CLEAN, SOFT SURFACE TO PREVENT DAMAGE TO THE COMPONENTS.

CAUTION: MAKE SURE THAT ALL THE PARTS ARE CLEAN BEFORE YOU ASSEMBLE THEM.

SUB TASK 25-41-51-400-103-A01

1. Assembly and Installation of the Nursing Table (20B-1)

(a) Assemble the nursing table assembly 20B-010 as follows:

1 Attach the bumpers 20B-060, 20B-070.

2 Attach the latch assembly 20B-020 with the screws 20B-030.

3 Attach the hinge 20B-040 with the screws 20B-030.

(b) Attach the nursing table assembly 20B-010 with the screws 20B-090 to the lavatory structure.

(c) Attach the hook assembly 20B-080 with the screws 20B-090 to the lavatory structure.

TASK 25-41-51-400-806-D01
D2549020400800 D2549020712600 D2549020813200

52. Assembly and Installation of the Nursing Table

A. General

This task gives you the installation and assembly procedures of the component.

B. Procedure

WARNING: BE CAREFUL WHEN YOU USE SOLVENTS/CLEANING AGENTS, SEALANTS AND OTHER MATERIALS. OBEY THE MATERIAL MANUFACTURER'S INSTRUCTIONS AND THE LOCAL REGULATIONS. MAKE SURE THAT THERE IS A GOOD FLOW OF AIR THROUGH THE WORK AREA. DO NOT BREATHE THE FUMES. DO NOT SMOKE. DO NOT USE THESE MATERIALS NEAR A FLAME, SPARKS OR SOURCES OF HEAT. USE PROTECTIVE CLOTHING, GOGGLES AND GLOVES. IF YOU GET ONE OF THESE MATERIALS ON YOUR SKIN OR IN YOUR EYES, FLUSH IT AWAY WITH A FLOW OF CLEAN WATER. IF YOU GET ONE OF THESE MATERIALS IN YOUR MOUTH, GET IMMEDIATE MEDICAL AID. IN GENERAL, THESE MATERIALS ARE POISONOUS, FLAMMABLE AND SKIN IRRITANTS.

CAUTION: DO ALL THE WORK ON A CLEAN, SOFT SURFACE TO PREVENT DAMAGE TO THE COMPONENTS.

CAUTION: MAKE SURE THAT ALL THE PARTS ARE CLEAN BEFORE YOU ASSEMBLE THEM.

SUB TASK 25-41-51-400-104-A01

1. Assembly and Installation of the Nursing Table (20C-1)

(a) Assemble the nursing table assembly 20C-010 as follows:

1 Attach the belt 20C-070 with the screws 20C-080 and the washers 20C-090.

2 Attach the bumpers 20C-060, 20C-110.

3 Attach the latch assembly 20C-020 with the screws 20C-030.

4 Attach the hinge 20C-040 and the spacer strip assembly 20C-100 with the screws 20C-140 and the washers 20C-150.

(b) Attach the nursing table assembly 20C-010 with the screws 20C-030 to the lavatory structure.

(c) Attach the catch 20C-120 with the screws 20C-130 to the lavatory structure.

TASK 25-41-51-400-806-E01
D2549020712000

53. Assembly and Installation of the Nursing Table

A. General

- Not applicable

B. Procedure

SUB TASK 25-41-51-400-105-A01
1. Assembly and Installation of the Nursing Table

(a) Not applicable.

TASK 25-41-51-400-807-A01
D2549010500000 D2549010500800 D2549010501200 D2549010502600 D2549010503800 D2549010506000 D2549010507600 D2549020603600 D2549020604000 D2549030500600 D2549030501400 D2549030503000

54. Assembly and Installation of the Service Cabinet

A. General

This task gives you the installation and assembly procedures of the component.

B. Job Set-up Information

(1) Not applicable

C. Procedure

WARNING: BE CAREFUL WHEN YOU USE SOLVENTS/CLEANING AGENTS, SEALANTS AND OTHER MATERIALS. OBEY THE MATERIAL MANUFACTURER'S INSTRUCTIONS AND THE LOCAL REGULATIONS. MAKE SURE THAT THERE IS A GOOD FLOW OF AIR THROUGH THE WORK AREA. DO NOT BREATHE THE FUMES. DO NOT SMOKE. DO NOT USE THESE MATERIALS NEAR A FLAME, SPARKS OR SOURCES OF HEAT. USE PROTECTIVE CLOTHING, GOGGLES AND GLOVES. IF YOU GET ONE OF THESE MATERIALS ON YOUR SKIN OR IN YOUR EYES, FLUSH IT AWAY WITH A FLOW OF CLEAN WATER. IF YOU GET ONE OF THESE MATERIALS IN YOUR MOUTH, GET IMMEDIATE MEDICAL AID. IN GENERAL, THESE MATERIALS ARE POISONOUS, FLAMMABLE AND SKIN IRRITANTS.

CAUTION: DO ALL THE WORK ON A CLEAN, SOFT SURFACE TO PREVENT DAMAGE TO THE COMPONENTS.

CAUTION: MAKE SURE THAT ALL THE PARTS ARE CLEAN BEFORE YOU ASSEMBLE THEM.

SUB TASK 25-41-51-440-054-A01
D2549020603600 D2549020604000

1. Assembly and Installation of the Service Cabinet (19-1)

(a) Install and assemble the PSU panel 19-220 as follows:

1 Attach the printed circuit board PCB 19-280 and the sign housing 19-250 to the PSU panel 19-220.

NOTE: For further instructions, see CMMV 33-26-06_DD704 (sign housing).

a Attach the lamps 19-257 to the sign housing 19-250.
b Attach the housing assembly 19-255 to the sign housing 19-250.

2 Attach the front frame 19-225 to the PSU panel 19-220.

3 Attach the shaver outlet 19-230 with the screws 19-240 to the PSU panel 19-220.

4 Attach the PSU panel 19-220 with the screws 19-270 to the lower part service cabinet 19-040.

5 Connect the PSU panel 19-220 to the electrical supply.

(b) Install and assemble the service cabinet assembly 19-010 as follows:

1 Assemble the angle 19-130 as follows:
a Attach the part of the double-spring ball catch 19-132 with the screws 19-145 to the lavatory structure.
b Attach the part of the double-spring ball catch 19-132 with the screws 19-133, the washers 19-134 and the nuts 19-135 to the angle 19-131.

2 Assemble the angle 19-120 as follows:
a Attach the part of the double-spring ball catch 19-122 with the screws 19-145 to the lavatory structure.
b Attach the part of the double-spring ball catch 19-122 with the screws 19-123, the washers 19-124 and the nuts 19-125 to the angle 19-121.

3 Attach the angles 19-120, 19-130 with the screws 19-060, the washers 19-070 and the nuts 19-150 to the center part service cabinet 19-030.

4 Attach the angle brackets 19-190 with the screws 19-090 and the washers 19-070.

5 Attach the lower part service cabinet 19-040 with the screws 19-060 and the washers 19-070.

6 Attach the lower part service cabinet 19-040 with the screws 19-200 to the angle brackets 19-190.

7 Attach the hinge 19-180 with the screws 19-060 and the washers 19-070 to the lavatory structure.

8 Attach the center part service cabinet 19-030 with the hinge pin 19-170 to the hinge 19-180.

9 Attach the upper part service cabinet assembly 19-020 with the screws 19-060 and the washers 19-070.

10 Attach the angle assemblies 19-191 with the screws 19-202, the washers 19-203 and the nuts 19-204 to the center part service cabinet 19-030.

11 Attach the block 19-205 with the screws 19-206, the washers 19-070 and the nuts 19-150 to the upper part service cabinet assembly 19-020.

SUB TASK 25-41-51-440-054-B01
D2549030500600 D2549030501400 D2549030503000

2. Assembly and Installation of the Service Cabinet (19-1)

(a) Install and assemble the PSU panel 19-220 as follows:

1 Attach the printed circuit board PCB 19-280 and the sign housing 19-250 to the PSU panel 19-220.

NOTE: For further instructions, see CMMV 33-26-06_DD704 (sign housing).

a Attach the lamps 19-257 to the sign housing 19-250.
b Attach the housing assembly 19-255 to the sign housing 19-250.

2 Attach the front frame 19-225 to the PSU panel 19-220.

3 Attach the shaver outlet 19-230 with the screws 19-240 to the PSU panel 19-220.

4 Attach the PSU panel 19-220 with the screws 19-270 to the lower part service cabinet 19-040.

5 Connect the PSU panel 19-220 to the electrical supply.

(b) Install and assemble the service cabinet assembly 19-010 as follows:

1 Assemble the angle 19-130 as follows:

a Attach the part of the double-spring ball catch 19-132 with the screws 19-145 to the lavatory structure.
b Attach the part of the double-spring ball catch 19-132 with the screws 19-133, the washers 19-134 and the nuts 19-135 to the angle 19-131.

2 Assemble the angle 19-120 as follows:
a Attach the part of the double-spring ball catch 19-122 with the screws 19-145 to the lavatory structure.
b Attach the part of the double-spring ball catch 19-122 with the screws 19-123, the washers 19-124 and the nuts 19-125 to the angle 19-121.

3 Attach the angles 19-120, 19-130 with the screws 19-060, the washers 19-070 and the nuts 19-150 to the center part service cabinet 19-030.

4 Attach the angle brackets 19-190 with the screws 19-090 and the washers 19-070.

5 Attach the lower part service cabinet 19-040 with the screws 19-060 and the washers 19-070.

6 Attach the lower part service cabinet 19-040 with the screws 19-200 to the angle brackets 19-190.

7 Attach the hinge 19-180 with the screws 19-060 and the washers 19-070 to the lavatory structure.

8 Attach the center part service cabinet 19-030 with the hinge pin 19-170 to the hinge 19-180.

9 Attach the upper part service cabinet assembly 19-020 with the screws 19-060 and the washers 19-070.

10 Attach the angle assemblies 19-191 with the screws 19-202, the washers 19-203 and the nuts 19-204 to the center part service cabinet 19-030.

11 Attach the block 19-205 with the screws 19-206, the washers 19-070 and the nuts 19-150 to the upper part service cabinet assembly 19-020.

(c) Attach the service boxes 19-210 to the service cabinet assembly 19-010.

SUB TASK 25-41-51-440-054-C01
D2549010500000 D2549010500800 D2549010501200 D2549010502600 D2549010503800 D2549010506000 D2549010507600

3. Assembly and Installation of the Service Cabinet (19-1)

(a) Install and assemble the PSU panel 19-220 as follows:

1 Attach the printed circuit board PCB 19-280 and the sign housing 19-250 to the PSU panel 19-220.

NOTE: For further instructions, see CMMV 33-26-06_DD704 (sign housing).

a Attach the lamps 19-257 to the sign housing 19-250.
b Attach the housing assembly 19-255 to the sign housing 19-250.

2 Attach the front frame 19-225 to the PSU panel 19-220.

3 Attach the shaver outlet 19-230 with the screws 19-240 to the PSU panel 19-220.

4 Attach the PSU panel 19-220 with the screws 19-270 to the lower part service cabinet 19-040.

5 Connect the PSU panel 19-220 to the electrical supply.

(b) Install and assemble the service cabinet assembly 19-010 as follows:

1 Assemble the angle 19-130 as follows:
a Attach the part of the double-spring ball catch 19-132 to the lavatory structure.
b Attach the part of the double-spring ball catch 19-132 with the screws 19-133, the washers 19-134 and the nuts 19-135 to the angle 19-131.

2 Assemble the angle 19-120 as follows:
a Attach the part of the double-spring ball catch 19-122 to the lavatory structure.
b Attach the part of the double-spring ball catch 19-122 with the screws 19-123, the washers 19-124 and the nuts 19-125 to the angle 19-121.

3 Attach the angles 19-120, 19-130 with the screws 19-060, the washers 19-070 and the nuts 19-150 to the center part service cabinet 19-030.

4 Attach the strip assembly 19-100 with the screws 19-060, 19-140 and the washers 19-070 to the lavatory structure.

5 Attach the angle brackets 19-190 with the screws 19-090 and the washers 19-070.

6 Attach the lower part service cabinet 19-040 with the screws 19-060 and the washers 19-070.

7 Attach the lower part service cabinet 19-040 with the screws 19-200 to the angle brackets 19-190.

8 Attach the hinge 19-180 with the screws 19-060 and the washers 19-070 to the lavatory structure.

9 Attach the center part service cabinet 19-030 with the hinge pin 19-170 to the hinge 19-180.

10 Attach the upper part service cabinet assembly 19-020 with the screws 19-060 and the washers 19-070.

11 Attach the angle assemblies 19-191 with the screws 19-202, the washers 19-203 and the nuts 19-204 to the center part service cabinet 19-030.

12 Attach the block 19-205 with the screws 19-206, the washers 19-070 and the nuts 19-150 to the upper part service cabinet assembly 19-020.

(c) Attach the service boxes 19-210 to the service cabinet assembly 19-010.

TASK 25-41-51-400-807-B01
D2547161903000 D2549010505600 D2549010507800 D2549020500200 D2549020600400 D2549020602800 D2549030502600 R225401128-000 R225401134-000 R225401188-006

55. Assembly and Installation of the Service Cabinet

A. General

This task gives you the installation and assembly procedures of the component.

B. Job Set-up Information

(1) Not applicable

C. Procedure

WARNING: BE CAREFUL WHEN YOU USE SOLVENTS/CLEANING AGENTS, SEALANTS AND OTHER MATERIALS. OBEY THE MATERIAL MANUFACTURER'S INSTRUCTIONS AND THE LOCAL REGULATIONS. MAKE SURE THAT THERE IS A GOOD FLOW OF AIR THROUGH THE WORK AREA. DO NOT BREATHE THE FUMES. DO NOT SMOKE. DO NOT USE THESE MATERIALS NEAR A FLAME, SPARKS OR SOURCES OF HEAT. USE PROTECTIVE CLOTHING, GOGGLES AND GLOVES. IF YOU GET ONE OF THESE MATERIALS ON YOUR SKIN OR IN YOUR EYES, FLUSH IT AWAY WITH A FLOW OF CLEAN WATER. IF YOU GET ONE OF THESE MATERIALS IN YOUR MOUTH, GET IMMEDIATE MEDICAL AID. IN GENERAL, THESE MATERIALS ARE POISONOUS, FLAMMABLE AND SKIN IRRITANTS.

CAUTION: DO ALL THE WORK ON A CLEAN, SOFT SURFACE TO PREVENT DAMAGE TO THE COMPONENTS.

CAUTION: MAKE SURE THAT ALL THE PARTS ARE CLEAN BEFORE YOU ASSEMBLE THEM.

SUB TASK 25-41-51-440-055-A01
D2547161903000 D2549010505600 D2549010507800 D2549020602800 R225401134-000

1. Assembly and Installation of the Service Cabinet (19A-1)

(a) Install the label 19A-340.

(b) Install and assemble the PSU panel 19A-270 as follows:

1 Attach the printed circuit board PCB 19A-330 and the sign housing 19A-300 to the PSU panel 19A-270.

NOTE: For further instructions, see CMMV 33-26-06_DD704 (sign housing).

a Attach the lamps 19A-307 to the sign housing 19A-300.
b Attach the housing assembly 19A-305 to the sign housing 19A-300.

2 Attach the front frame 19A-275 to the PSU panel 19A-270.

3 Attach the shaver outlet 19A-280 with the screws 19A-290 to the PSU panel 19A-270.

4 Attach the PSU panel 19A-270 with the screws 19A-320 to the lower part service cabinet 19A-040.

5 Connect the PSU panel 19A-270 to the electrical supply.

(c) Install and assemble the service cabinet assembly 19A-010 as follows:

1 Assemble the angle 19A-130 as follows:
a Attach the part of the double-spring ball catch 19A-132 with the screws 19A-110 to the lavatory structure.
b Attach the part of the double-spring ball catch 19A-132 with the screws 19A-133, the washers 19A-134 and the nuts 19A-135 to the angle 19A-131.

2 Assemble the angle 19A-120 as follows:
a Attach the part of the double-spring ball catch 19A-122 with the screws 19A-110 to the lavatory structure.
b Attach the part of the double-spring ball catch 19A-122 with the screws 19A-123, the washers 19A-124 and the nuts 19A-125 to the angle 19A-121.

3 Attach the angles 19A-120, 19A-130 with the screws 19A-060, the washers 19A-070 and the nuts 19A-150 to the center part service cabinet 19A-030.

4 Attach the angle brackets 19A-190 with the screws 19A-090 and the washers 19A-070.

5 Attach the lower part service cabinet 19A-040 with the screws 19A-060 and the washers 19A-070.

6 Attach the lower part service cabinet 19A-040 with the screws 19A-200 to the angle brackets 19A-190.

7 Attach the chutes 19A-240 to the lower part service cabinet 19A-040.

8 Attach the soap dispenser assemblies 19A-230 to the chutes 19A-240.

9 Attach the hinge 19A-180 with the screws 19A-060 and the washers 19A-070 to the lavatory structure.

10 Attach the center part service cabinet 19A-030 with the hinge pin 19A-170 to the hinge 19A-180.

11 Attach the upper part service cabinet assembly 19A-020 with the screws 19A-060 and the washers 19A-070.

12 Attach the angle assemblies 19A-231 with the screws 19A-242, the washers 19A-243 and the nuts 19A-244 to the center part service cabinet 19A-030.

13 Attach the block 19A-245 with the screws 19A-246, the washers 19A-070 and the nuts 19A-150 to the upper part service cabinet assembly 19A-020.

(d) Assemble the service box or the service box assembly 19A-260 as follows:

1 Attach the handle holders 19A-265 and the handle 19A-267 with the screws 19A-266.

2 Attach the drawer guides 19A-264 with the screws 19A-268.

3 Attach the drawer 19A-263 to the drawer guides 19A-264.

(e) Attach the service box or the service box assembly 19A-260 to the service cabinet assembly 19A-010.

SUB TASK 25-41-51-440-055-B01
D2549020500200 D2549020600400 R225401128-000

2. Assembly and Installation of the Service Cabinet (19A-1)

(a) If removed, attach the label 19A-340 to the service cabinet assembly 19A-010.

(b) Install and assemble the PSU panel 19A-270 as follows:

1 Attach the printed circuit board PCB 19A-330 and the sign housing 19A-300 to the PSU panel 19A-270.

NOTE: For further instructions, see CMMV 33-26-06_DD704 (sign housing).

a Attach the lamps 19A-307 to the sign housing 19A-300.
b Attach the housing assembly 19A-305 to the sign housing 19A-300.

2 Attach the front frame 19A-275 to the PSU panel 19A-270.

3 Attach the shaver outlet 19A-280 with the screws 19A-290 to the PSU panel 19A-270.

4 Attach the PSU panel 19A-270 with the screws 19A-320 to the lower part service cabinet 19A-040.

5 Connect the PSU panel 19A-270 to the electrical supply.

(c) Install and assemble the service cabinet assembly 19A-010 as follows:

1 Assemble the angle 19A-130 as follows:
a Attach the part of the double-spring ball catch 19A-132 with the screws 19A-110 to the lavatory structure.
b Attach the part of the double-spring ball catch 19A-132 with the screws 19A-133, the washers 19A-134 and the nuts 19A-135 to the angle 19A-131.

2 Assemble the angle 19A-120 as follows:
a Attach the part of the double-spring ball catch 19A-122 with the screws 19A-110 to the lavatory structure.
b Attach the part of the double-spring ball catch 19A-122 with the screws 19A-123, the washers 19A-124 and the nuts 19A-125 to the angle 19A-121.

3 Attach the angles 19A-120, 19A-130 with the screws 19A-060, the washers 19A-070 and the nuts 19A-150 to the center part service cabinet 19A-030.

4 Attach the angle brackets 19A-190 with the screws 19A-090 and the washers 19A-070.

5 Attach the lower part service cabinet 19A-040 with the screws 19A-060 and the washers 19A-070.

6 Attach the lower part service cabinet 19A-040 with the screws 19A-200 to the angle brackets 19A-190.

7 Attach the chutes 19A-240 to the lower part service cabinet 19A-040.

8 Attach the soap dispenser assemblies 19A-230 to the chutes 19A-240.

9 Attach the hinge 19A-180 with the screws 19A-060 and the washers 19A-070 to the lavatory structure.

10 Attach the center part service cabinet 19A-030 with the hinge pin 19A-170 to the hinge 19A-180.

11 Attach the upper part service cabinet assembly 19A-020 with the screws 19A-060 and the washers 19A-070.

12 Attach the angle assemblies 19A-231 with the screws 19A-242, the washers 19A-243 and the nuts 19A-244 to the center part service cabinet 19A-030.

13 Attach the block 19A-245 with the screws 19A-246, the washers 19A-070 and the nuts 19A-150 to the upper part service cabinet assembly 19A-020.

(d) Attach the service box 19A-260 to the service cabinet assembly 19A-010.

SUB TASK 25-41-51-440-055-C01
D2549030502600 R225401188-006

3. Assembly and Installation of the Service Cabinet (19A-1)

(a) If removed, attach the label 19A-340 and the protective film 19A-350 to the service cabinet assembly 19A-010.

(b) Install and assemble the service cabinet assembly 19A-010 as follows:

1 Assemble the angle 19A-130 as follows:
a Attach the part of the double-spring ball catch 19A-132 with the screws 19A-110 to the lavatory structure.
b Attach the part of the double-spring ball catch 19A-132 with the screws 19A-133, the washers 19A-134 and the nuts 19A-135 to the angle 19A-131.

2 Assemble the angle 19A-120 as follows:
a Attach the part of the double-spring ball catch 19A-122 with the screws 19A-110 to the lavatory structure.

b Attach the part of the double-spring ball catch 19A-122 with the screws 19A-123, the washers 19A-124 and the nuts 19A-125 to the angle 19A-121.

3 Attach the angles 19A-120, 19A-130 with the screws 19A-060, the washers 19A-070 and the nuts 19A-150 to the center part service cabinet 19A-030.

4 Attach the angle brackets 19A-190 with the screws 19A-090 and the washers 19A-070.

5 Attach the lower part service cabinet 19A-040 with the screws 19A-060 and the washers 19A-070.

6 Attach the lower part service cabinet 19A-040 with the screws 19A-200 to the angle brackets 19A-190.

7 Attach the chutes 19A-240 to the lower part service cabinet 19A-040.

8 Attach the soap dispenser assemblies 19A-230 to the chutes 19A-240.

9 Attach the hinge 19A-180 with the screws 19A-060 and the washers 19A-070 to the lavatory structure.

10 Attach the center part service cabinet 19A-030 with the hinge pin 19A-170 to the hinge 19A-180.

11 Attach the upper part service cabinet assembly 19A-020 with the screws 19A-060 and the washers 19A-070.

12 Attach the angle assemblies 19A-231 with the screws 19A-242, the washers 19A-243 and the nuts 19A-244 to the center part service cabinet 19A-030.

13 Attach the block 19A-245 with the screws 19A-246, the washers 19A-070 and the nuts 19A-150 to the upper part service cabinet assembly 19A-020.

(c) Assemble the service box or the service box assembly 19A-260 as follows:

1 Attach the handle holders 19A-265 and the handle 19A-267 with the screws 19A-266.

2 Attach the drawer guides 19A-264 with the screws 19A-268.

3 Attach the drawer 19A-263 to the drawer guides 19A-264.

(d) Attach the service box or the service box assembly 19A-260 to the service cabinet assembly 19A-010.

TASK 25-41-51-400-807-C01

D2549010500400 D2549010500600 D2549010501400 D2549010501600 D2549010502200 D2549010502400 D2549010502800 D2549010503200 D2549010503400 D2549010504200 D2549010504400 D2549010504600 D2549010504800 D2549010505000 D2549010505200 D2549010505400 D2549010505800 D2549010506200 D2549010506800 D2549010507000 D2549010507400 D2549010508000 D2549010508200 D2549010508400 D2549010508600 D2549010508800 D2549010509000 D2549010509200 D2549020500400 D2549020500800 D2549020501200 D2549020501800 D2549020502000 D2549020502400 D2549020502600 D2549020503000 D2549020503600 D2549020504000 D2549020504200 D2549020504400 D2549020504600 D2549020505000 D2549020600000 D2549020600200 D2549020600800 D2549020601000 D2549020601200 D2549020601400 D2549020601600 D2549020601800 D2549020602400 D2549020602600 D2549020603000 D2549020603200 D2549020603400 D2549020603800 D2549020606400 D2549020606600 D2549020607200 D2549030500400 D2549030500800 D2549030501000 D2549030501200 D2549030502000 D2549030502800 D2549030503400 D2549030503600 R225401115-002 R225401133-000 R225401139-000 R225401145-000 R225401146-000 R225401146-002 R225401188-000 R225401188-002 R225401188-004

56. Assembly and Installation of the Service Cabinet

A. General

This task gives you the installation and assembly procedures of the component.

B. Job Set-up Information

(1) Not applicable

C. Procedure

WARNING: BE CAREFUL WHEN YOU USE SOLVENTS/CLEANING AGENTS, SEALANTS AND OTHER MATERIALS. OBEY THE MATERIAL MANUFACTURER'S INSTRUCTIONS AND THE LOCAL REGULATIONS. MAKE SURE THAT THERE IS A GOOD FLOW OF AIR THROUGH THE WORK AREA. DO NOT BREATHE THE FUMES. DO NOT SMOKE. DO NOT USE THESE MATERIALS NEAR A FLAME, SPARKS OR SOURCES OF HEAT. USE PROTECTIVE CLOTHING, GOGGLES AND GLOVES. IF YOU GET ONE OF THESE MATERIALS ON YOUR SKIN OR IN YOUR EYES, FLUSH IT AWAY WITH A FLOW OF CLEAN WATER. IF YOU GET ONE OF THESE MATERIALS IN YOUR MOUTH, GET IMMEDIATE MEDICAL AID. IN GENERAL, THESE MATERIALS ARE POISONOUS, FLAMMABLE AND SKIN IRRITANTS.

CAUTION: DO ALL THE WORK ON A CLEAN, SOFT SURFACE TO PREVENT DAMAGE TO THE COMPONENTS.

CAUTION: **MAKE SURE THAT ALL THE PARTS ARE CLEAN BEFORE YOU ASSEMBLE THEM.**

SUB TASK 25-41-51-440-056-A01
D2549020501200 D2549020502400

1. Assembly and Installation of the Service Cabinet (19B-1)

(a) Install and assemble the PSU panel 19B-220 as follows:

1 Attach the printed circuit board PCB 19B-280 and the sign housing 19B-250 to the PSU panel 19B-220.

NOTE: **For further instructions, see CMMV 33-26-06_DD704 (sign housing).**

a Attach the label 19B-290 and the protective film 19B-300 to the sign housing 19B-250.
b Attach the lamps 19B-257 to the sign housing 19B-250.
c Attach the housing assembly 19B-255 to the sign housing 19B-250.

2 Attach the front frame 19B-225 to the PSU panel 19B-220.

3 Attach the shaver outlet 19B-230 with the screws 19B-240 to the PSU panel 19B-220.

4 Attach the PSU panel 19B-220 with the screws 19B-270 to the lower part service cabinet 19B-040.

5 Connect the PSU panel 19B-220 to the electrical supply.

(b) Install and assemble the service cabinet assembly 19B-010 as follows:

1 Assemble the angle 19B-130 as follows:
a Attach the part of the double-spring ball catch 19B-132 to the lavatory structure.
b Attach the part of the double-spring ball catch 19B-132 with the screws 19B-133, the washers 19B-134 and the nuts 19B-135 to the angle 19B-131.

2 Assemble the angle 19B-120 as follows:
a Attach the part of the double-spring ball catch 19B-122 to the lavatory structure.
b Attach the part of the double-spring ball catch 19B-122 with the screws 19B-123, the washers 19B-124 and the nuts 19B-125 to the angle 19B-121.

3 Attach the angles 19B-120, 19B-130 with the screws 19B-060, the washers 19B-070 and the nuts 19B-150 to the center part service cabinet 19B-030.

4 Attach the strip assembly 19B-100 with the screws 19B-060, 19B-140 and the washers 19B-070 to the lavatory structure.

5 Attach the angle brackets 19B-190 with the screws 19B-090 and the washers 19B-070.

6 Attach the lower part service cabinet 19B-040 with the screws 19B-060 and the washers 19B-070.

7 Attach the lower part service cabinet 19B-040 with the screws 19B-200 to the angle brackets 19B-190.

8 Attach the hinge 19B-180 with the screws 19B-060 and the washers 19B-070 to the lavatory structure.

9 Attach the center part service cabinet 19B-030 with the hinge pin 19B-170 to the hinge 19B-180.

10 Attach the upper part service cabinet assembly 19B-020 with the screws 19B-060 and the washers 19B-070.

11 Attach the angle assemblies 19B-191 with the screws 19B-204, the washers 19B-205 and the nuts 19B-206 to the center part service cabinet 19B-030.

12 Attach the block 19B-201 with the screws 19B-202, the washers 19B-070 and the nuts 19B-150 to the upper part service cabinet assembly 19B-020.

(c) Attach the service box 19B-210 to the service cabinet assembly 19B-010.

SUB TASK 25-41-51-440-056-B01
D2549010500600 D2549010501400 D2549010502200 D2549010503200 D2549010504600 D2549010505200 D2549020500400 D2549020500800 D2549020501800 D2549020502000 R225401146-000 R225401146-002

2. Assembly and Installation of the Service Cabinet (19B-1)

(a) Install and assemble the PSU panel 19B-220 as follows:

1 Attach the printed circuit board PCB 19B-280 and the sign housing 19B-250 to the PSU panel 19B-220.

NOTE: For further instructions, see CMMV 33-26-06_DD704 (sign housing).

a Attach the label 19B-290 and the protective film 19B-300 to the sign housing 19B-250.
b Attach the lamps 19B-257 to the sign housing 19B-250.
c Attach the housing assembly 19B-255 to the sign housing 19B-250.

2 Attach the shaver outlet 19B-230 with the screws 19B-240 to the PSU panel 19B-220.

3 Attach the PSU panel 19B-220 with the screws 19B-270 to the lower part service cabinet 19B-040.

4 Connect the PSU panel 19B-220 to the electrical supply.

(b) Install and assemble the service cabinet assembly 19B-010 as follows:

1 Assemble the angle 19B-130 as follows:
a Attach the part of the double-spring ball catch 19B-132 to the lavatory structure.
b Attach the part of the double-spring ball catch 19B-132 with the screws 19B-133, the washers 19B-134 and the nuts 19B-135 to the angle 19B-131.

2 Assemble the angle 19B-120 as follows:
a Attach the part of the double-spring ball catch 19B-122 to the lavatory structure.
b Attach the part of the double-spring ball catch 19B-122 with the screws 19B-123, the washers 19B-124 and the nuts 19B-125 to the angle 19B-121.

3 Attach the angles 19B-120, 19B-130 with the screws 19B-060, the washers 19B-070 and the nuts 19B-150 to the center part service cabinet 19B-030.

4 Attach the strip assembly 19B-100 with the screws 19B-060, 19B-140 and the washers 19B-070 to the lavatory structure.

5 Attach the angle brackets 19B-190 with the screws 19B-090 and the washers 19B-070.

6 Attach the lower part service cabinet 19B-040 with the screws 19B-060 and the washers 19B-070.

7 Attach the lower part service cabinet 19B-040 with the screws 19B-200 to the angle brackets 19B-190.

8 Attach the hinge 19B-180 with the screws 19B-060 and the washers 19B-070 to the lavatory structure.

9 Attach the center part service cabinet 19B-030 with the hinge pin 19B-170 to the hinge 19B-180.

10 Attach the upper part service cabinet assembly 19B-020 with the screws 19B-060 and the washers 19B-070.

11 Attach the angle assemblies 19B-191 with the screws 19B-204, the washers 19B-205 and the nuts 19B-206 to the center part service cabinet 19B-030.

12 Attach the block 19B-201 with the screws 19B-202, the washers 19B-070 and the nuts 19B-150 to the upper part service cabinet assembly 19B-020.

(c) Assemble the service box or the service box assembly 19B-210 as follows:

1 Attach the handle holders 19B-215 and the handle 19B-217 with the screws 19B-216.

2 Attach the drawer guides 19B-214 with the screws 19B-218.

3 Attach the drawer 19B-213 to the drawer guides 19B-214.

(d) Attach the service box or the service box assembly 19B-210 to the service cabinet assembly 19B-010.

SUB TASK 25-41-51-440-056-C01

D2549010504400 D2549010505000 D2549010505400 D2549010505800 D2549010506800 D2549010507400 D2549010508000 D2549010508200 D2549010508600 D2549010508800 D2549010509000 D2549010509200 D2549020503600 D2549020504000 D2549020504600 D2549020600000 D2549020600200 D2549020600800 D2549020601000 D2549020601200 D2549020601400 D2549020601600 D2549020601800 D2549020602400 D2549020602600 D2549020603000 D2549020603200 D2549020603400 D2549020603800 D2549020606400 D2549020606600 D2549020607200 D2549030500400 D2549030500800 D2549030501000 D2549030501200 D2549030502000 D2549030502800 D2549030503400 D2549030503600 R225401133-

000 R225401139-000 R225401145-000 R225401188-000 R225401188-002 R225401188-004

3. Assembly and Installation of the Service Cabinet (19B-1)

(a) Attach the label 19B-290 and the protective film 19B-300.

(b) Install and assemble the PSU panel 19B-220 as follows:

1 Attach the printed circuit board PCB 19B-280 and the sign housing 19B-250 to the PSU panel 19B-220.

NOTE: For further instructions, see CMMV 33-26-06_DD704 (sign housing).

a Attach the lamps 19B-257 to the sign housing 19B-250.
b Attach the housing assembly 19B-255 to the sign housing 19B-250.

2 Attach the front frame 19B-225 to the PSU panel 19B-220.

3 Attach the shaver outlet 19B-230 with the screws 19B-240 to the PSU panel 19B-220.

4 Attach the PSU panel 19B-220 with the screws 19B-270 to the lower part service cabinet 19B-040.

5 Connect the PSU panel 19B-220 to the electrical supply.

(c) Install and assemble the service cabinet assembly 19B-010 as follows:

1 Assemble the angle 19B-130 as follows:
a Attach the part of the double-spring ball catch 19B-132 with the screws 19B-145 to the lavatory structure.
b Attach the part of the double-spring ball catch 19B-132 with the screws 19B-133, the washers 19B-134 and the nuts 19B-135 to the angle 19B-131.

2 Assemble the angle 19B-120 as follows:
a Attach the part of the double-spring ball catch 19B-122 with the screws 19B-145 to the lavatory structure.
b Attach the part of the double-spring ball catch 19B-122 with the screws 19B-123, the washers 19B-124 and the nuts 19B-125 to the angle 19B-121.

3 Attach the angles 19B-120, 19B-130 with the screws 19B-060, the washers 19B-070 and the nuts 19B-150 to the center part service cabinet 19B-030.

4 Attach the angle brackets 19B-190 with the screws 19B-090 and the washers 19B-070.

5 Attach the lower part service cabinet 19B-040 with the screws 19B-060 and the washers 19B-070.

6 Attach the lower part service cabinet 19B-040 with the screws 19B-200 to the angle brackets 19B-190.

7 Attach the hinge 19B-180 with the screws 19B-060 and the washers 19B-070 to the lavatory structure.

8 Attach the center part service cabinet 19B-030 with the hinge pin 19B-170 to the hinge 19B-180.

9 Attach the upper part service cabinet assembly 19B-020 with the screws 19B-060 and the washers 19B-070.

10 Attach the angle assemblies 19B-191 with the screws 19B-204, the washers 19B-205 and the nuts 19B-206 to the center part service cabinet 19B-030.

11 Attach the block 19B-201 with the screws 19B-202, the washers 19B-070 and the nuts 19B-150 to the upper part service cabinet assembly 19B-020.

(d) Assemble the service box or the service box assembly 19B-210 as follows:

1 Attach the handle holders 19B-215 and the handle 19B-217 with the screws 19B-216.

2 Attach the drawer guides 19B-214 with the screws 19B-218.

3 Attach the drawer 19B-213 to the drawer guides 19B-214.

(e) Attach the service box or the service box assembly 19B-210 to the service cabinet assembly 19B-010.

SUB TASK 25-41-51-440-056-D01
D2549010500400 D2549010501600 D2549010502400 D2549010502800 D2549010503400 D2549010506200 D2549010507000

4. Assembly and Installation of the Service Cabinet (19B-1)

(a) Install and assemble the PSU panel 19B-220 as follows:

1 Attach the printed circuit board PCB 19B-280 and the sign housing 19B-250 to the PSU panel 19B-220.

NOTE: For further instructions, see CMMV 33-26-06_DD704 (sign housing).

a Attach the label 19B-290 and the protective film 19B-300 to the sign housing 19B-250.
b Attach the lamps 19B-257 to the sign housing 19B-250.
c Attach the housing assembly 19B-255 to the sign housing 19B-250.

2 Attach the front frame or the front frame assembly 19B-225 to the PSU panel 19B-220.

3 Attach the shaver outlet 19B-230 with the screws 19B-240 to the PSU panel 19B-220.

4 Attach the PSU panel 19B-220 with the screws 19B-270 to the lower part service cabinet 19B-040.

5 Connect the PSU panel 19B-220 to the electrical supply.

(b) Install and assemble the service cabinet assembly 19B-010 as follows:

1 Assemble the angle 19B-130 as follows:
a Attach the part of the double-spring ball catch 19B-132 to the lavatory structure.
b Attach the part of the double-spring ball catch 19B-132 with the screws 19B-133, the washers 19B-134 and the nuts 19B-135 to the angle 19B-131.

2 Assemble the angle 19B-120 as follows:
a Attach the part of the double-spring ball catch 19B-122 to the lavatory structure.

b Attach the part of the double-spring ball catch 19B-122 with the screws 19B-123, the washers 19B-124 and the nuts 19B-125 to the angle 19B-121.

3 Attach the angles 19B-120, 19B-130 with the screws 19B-060, the washers 19B-070 and the nuts 19B-150 to the center part service cabinet 19B-030.

4 Attach the strip assembly 19B-100 with the screws 19B-060, 19B-140 and the washers 19B-070 to the lavatory structure.

5 Attach the angle brackets 19B-190 with the screws 19B-090 and the washers 19B-070.

6 Attach the lower part service cabinet 19B-040 with the screws 19B-060 and the washers 19B-070.

7 Attach the lower part service cabinet 19B-040 with the screws 19B-200 to the angle brackets 19B-190.

8 Attach the chutes 19B-042 to the lower part service cabinet 19B-040.

9 Attach the soap dispenser assemblies 19B-041 to the chutes 19B-042.

10 Attach the hinge 19B-180 with the screws 19B-060 and the washers 19B-070 to the lavatory structure.

11 Attach the center part service cabinet 19B-030 with the hinge pin 19B-170 to the hinge 19B-180.

12 Attach the upper part service cabinet assembly 19B-020 with the screws 19B-060 and the washers 19B-070.

13 Attach the angle assemblies 19B-191 with the screws 19B-204, the washers 19B-205 and the nuts 19B-206 to the center part service cabinet 19B-030.

14 Attach the block 19B-201 with the screws 19B-202, the washers 19B-070 and the nuts 19B-150 to the upper part service cabinet assembly 19B-020.

(c) Assemble the service box or the service box assembly 19B-210 as follows:

1 Attach the handle holders 19B-215 and the handle 19B-217 with the screws 19B-216.

2 Attach the drawer guides 19B-214 with the screws 19B-218.

3 Attach the drawer 19B-213 to the drawer guides 19B-214.

(d) Attach the service box or the service box assembly 19B-210 to the service cabinet assembly 19B-010.

SUB TASK 25-41-51-440-056-E01
D2549010504200 D2549010504800 D2549010508400

5. Assembly and Installation of the Service Cabinet (19B-1)

(a) Install and assemble the PSU panel 19B-220 as follows:

1 Attach the printed circuit board PCB 19B-280 and the sign housing 19B-250 to the PSU panel 19B-220.

NOTE: For further instructions, see CMMV 33-26-06_DD704 (sign housing).

a Attach the label 19B-290 and the protective film 19B-300 to the sign housing 19B-250.
b Attach the lamps 19B-257 to the sign housing 19B-250.
c Attach the housing assembly 19B-255 to the sign housing 19B-250.

2 Attach the shaver outlet 19B-230 with the screws 19B-240 to the PSU panel 19B-220.

3 Attach the PSU panel 19B-220 with the screws 19B-270 to the lower part service cabinet 19B-040.

4 Connect the PSU panel 19B-220 to the electrical supply.

(b) Install and assemble the service cabinet assembly 19B-010 as follows:

1 Assemble the angle 19B-130 as follows:
a Attach the part of the double-spring ball catch 19B-132 with the screws 19B-145 to the lavatory structure.
b Attach the part of the double-spring ball catch 19B-132 with the screws 19B-133, the washers 19B-134 and the nuts 19B-135 to the angle 19B-131.

2 Assemble the angle 19B-120 as follows:
a Attach the part of the double-spring ball catch 19B-122 with the screws 19B-145 to the lavatory structure.

b Attach the part of the double-spring ball catch 19B-122 with the screws 19B-123, the washers 19B-124 and the nuts 19B-125 to the angle 19B-121.

3 Attach the angles 19B-120, 19B-130 with the screws 19B-060, the washers 19B-070 and the nuts 19B-150 to the center part service cabinet 19B-030.

4 Attach the angle brackets 19B-190 with the screws 19B-090 and the washers 19B-070.

5 Attach the lower part service cabinet 19B-040 with the screws 19B-060 and the washers 19B-070.

6 Attach the lower part service cabinet 19B-040 with the screws 19B-200 to the angle brackets 19B-190.

7 Attach the hinge 19B-180 with the screws 19B-060 and the washers 19B-070 to the lavatory structure.

8 Attach the center part service cabinet 19B-030 with the hinge pin 19B-170 to the hinge 19B-180.

9 Attach the upper part service cabinet assembly 19B-020 with the screws 19B-060 and the washers 19B-070.

10 Attach the angle assemblies 19B-191 with the screws 19B-204, the washers 19B-205 and the nuts 19B-206 to the center part service cabinet 19B-030.

11 Attach the block 19B-201 with the screws 19B-202, the washers 19B-070 and the nuts 19B-150 to the upper part service cabinet assembly 19B-020.

(c) Assemble the service box or the service box assembly 19B-210 as follows:

1 Attach the handle holders 19B-215 and the handle 19B-217 with the screws 19B-216.

2 Attach the drawer guides 19B-214 with the screws 19B-218.

3 Attach the drawer 19B-213 to the drawer guides 19B-214.

(d) Attach the service box or the service box assembly 19B-210 to the service cabinet assembly 19B-010.

SUB TASK 25-41-51-440-056-F01
D2549020502600 D2549020503000 D2549020504200 D2549020504400 D2549020505000 R225401115-002

6. Assembly and Installation of the Service Cabinet (19B-1)

(a) Install the label 19B-290.

(b) Install and assemble the PSU panel 19B-220 as follows:

1 Attach the printed circuit board PCB 19B-280 and the sign housing 19B-250 to the PSU panel 19B-220.

NOTE: For further instructions, see CMMV 33-26-06_DD704 (sign housing).

a Attach the label 19B-290 and the protective film 19B-300 to the sign housing 19B-250.
b Attach the lamps 19B-257 to the sign housing 19B-250.
c Attach the housing assembly 19B-255 to the sign housing 19B-250.

2 Attach the front frame 19B-225 to the PSU panel 19B-220.

3 Attach the shaver outlet 19B-230 with the screws 19B-240 to the PSU panel 19B-220.

4 Attach the PSU panel 19B-220 with the screws 19B-270 to the lower part service cabinet 19B-040.

5 Connect the PSU panel 19B-220 to the electrical supply.

(c) Install and assemble the service cabinet assembly 19B-010 as follows:

1 Assemble the angle 19B-130 as follows:
a Attach the part of the double-spring ball catch 19B-132 to the lavatory structure.
b Attach the part of the double-spring ball catch 19B-132 with the screws 19B-133, the washers 19B-134 and the nuts 19B-135 to the angle 19B-131.

2 Assemble the angle 19B-120 as follows:
a Attach the part of the double-spring ball catch 19B-122 to the lavatory structure.

b Attach the part of the double-spring ball catch 19B-122 with the screws 19B-123, the washers 19B-124 and the nuts 19B-125 to the angle 19B-121.

3 Attach the angles 19B-120, 19B-130 with the screws 19B-060, the washers 19B-070 and the nuts 19B-150 to the center part service cabinet 19B-030.

4 Attach the strip assembly 19B-100 with the screws 19B-060, 19B-140 and the washers 19B-070 to the lavatory structure.

5 Attach the angle brackets 19B-190 with the screws 19B-090 and the washers 19B-070.

6 Attach the lower part service cabinet 19B-040 with the screws 19B-060 and the washers 19B-070.

7 Attach the lower part service cabinet 19B-040 with the screws 19B-200 to the angle brackets 19B-190.

8 Attach the hinge 19B-180 with the screws 19B-060 and the washers 19B-070 to the lavatory structure.

9 Attach the center part service cabinet 19B-030 with the hinge pin 19B-170 to the hinge 19B-180.

10 Attach the upper part service cabinet assembly 19B-020 with the screws 19B-060 and the washers 19B-070.

11 Attach the angle assemblies 19B-191 with the screws 19B-204, the washers 19B-205 and the nuts 19B-206 to the center part service cabinet 19B-030.

12 Attach the block 19B-201 with the screws 19B-202, the washers 19B-070 and the nuts 19B-150 to the upper part service cabinet assembly 19B-020.

(d) Assemble the service box or the service box assembly 19B-210 as follows:

1 Attach the handle holders 19B-215 and the handle 19B-217 with the screws 19B-216.

2 Attach the drawer guides 19B-214 with the screws 19B-218.

3 Attach the drawer 19B-213 to the drawer guides 19B-214.

(e) Attach the service box or the service box assembly 19B-210 to the service cabinet assembly 19B-010.

TASK 25-41-51-400-807-D01
D2549010501000 D2549010501800 D2549010502000 D2549010503600 D2549010506400 D2549010507200 D2549010511200 D2549020501600 D2549020503400 D2549020503800 D2549020505400 D2549020505800 D2549030500200 D2549030501600 D2549030502200 D2549030503200 R225401107-000 R225401107-002

57. Assembly and Installation of the Service Cabinet

A. General

This task gives you the installation and assembly procedures of the component.

B. Job Set-up Information

(1) Not applicable

C. Procedure

WARNING: BE CAREFUL WHEN YOU USE SOLVENTS/CLEANING AGENTS, SEALANTS AND OTHER MATERIALS. OBEY THE MATERIAL MANUFACTURER'S INSTRUCTIONS AND THE LOCAL REGULATIONS. MAKE SURE THAT THERE IS A GOOD FLOW OF AIR THROUGH THE WORK AREA. DO NOT BREATHE THE FUMES. DO NOT SMOKE. DO NOT USE THESE MATERIALS NEAR A FLAME, SPARKS OR SOURCES OF HEAT. USE PROTECTIVE CLOTHING, GOGGLES AND GLOVES. IF YOU GET ONE OF THESE MATERIALS ON YOUR SKIN OR IN YOUR EYES, FLUSH IT AWAY WITH A FLOW OF CLEAN WATER. IF YOU GET ONE OF THESE MATERIALS IN YOUR MOUTH, GET IMMEDIATE MEDICAL AID. IN GENERAL, THESE MATERIALS ARE POISONOUS, FLAMMABLE AND SKIN IRRITANTS.

CAUTION: DO ALL THE WORK ON A CLEAN, SOFT SURFACE TO PREVENT DAMAGE TO THE COMPONENTS.

CAUTION: MAKE SURE THAT ALL THE PARTS ARE CLEAN BEFORE YOU ASSEMBLE THEM.

SUB TASK 25-41-51-440-057-A01

1. Assembly and Installation of the Service Cabinet (19C-1)

(a) Install the label 19C-340.

(b) Install and assemble the PSU panel 19C-270 as follows:

1 Attach the printed circuit board PCB 19C-330 and the sign housing 19C-300 to the PSU panel 19C-270.

NOTE: For further instructions, see CMMV 33-26-06_DD704 (sign housing).

a Attach the lamps 19C-307 to the sign housing 19C-300.
b Attach the housing assembly 19C-305 to the sign housing 19C-300.

2 Attach the front frame 19C-275 to the PSU panel 19C-270.

3 Attach the shaver outlet 19C-280 with the screws 19C-290 to the PSU panel 19C-270.

4 Attach the PSU panel 19C-270 with the screws 19C-320 to the lower part service cabinet 19C-040.

5 Connect the PSU panel 19C-270 to the electrical supply.

(c) Install and assemble the service cabinet assembly 19C-010 as follows:

1 Assemble the angle 19C-130 as follows:
a Attach the part of the double-spring ball catch 19C-132 with the screws 19C-133, the washers 19C-134 and the nuts 19C-135 to the angle 19C-131.

2 Assemble the angle 19C-120 as follows:
a Attach the part of the double-spring ball catch 19C-122 with the screws 19C-123, the washers 19C-124 and the nuts 19C-125 to the angle 19C-121.

3 Attach the angles 19C-120, 19C-130 with the screws 19C-060, the washers 19C-070 and the nuts 19C-150 to the center part service cabinet 19C-030.

4 Attach the strip assembly 19C-100 with the screws 19C-060, 19C-140 and the washers 19C-070 to the lavatory structure.

5 Attach the angle brackets 19C-190 with the screws 19C-090 and the washers 19C-070.

6 Attach the lower part service cabinet 19C-040 with the screws 19C-060 and the washers 19C-070.

7 Attach the lower part service cabinet 19C-040 with the screws 19C-200 to the angle brackets 19C-190.

8 Attach the chutes 19C-240 to the lower part service cabinet 19C-040.

9 Attach the soap dispenser assemblies 19C-230 to the chutes 19C-240.

10 Attach the hinge 19C-180 with the screws 19C-060 and the washers 19C-070 to the lavatory structure.

11 Attach the center part service cabinet 19C-030 with the hinge pin 19C-170 to the hinge 19C-180.

12 Attach the upper part service cabinet assembly 19C-020 with the screws 19C-060 and the washers 19C-070.

13 Attach the angle assemblies 19C-220 with the screws 19C-253, the washers 19C-255 and the nuts 19C-257 to the center part service cabinet 19C-030.

14 Attach the block 19C-210 with the screws 19C-258, the washers 19C-070 and the nuts 19C-150 to the upper part service cabinet assembly 19C-020.

(d) Assemble the service box or the service box assembly 19C-260 as follows:

1 Attach the handle holders 19C-265 and the handle 19C-267 with the screws 19C-266.

2 Attach the drawer guides 19C-264 with the screws 19C-268.

3 Attach the drawer 19C-263 to the drawer guides 19C-264.

(e) Attach the service box or the service box assembly 19C-260 to the service cabinet assembly 19C-010.

TASK 25-41-51-400-807-E01
D2549020500000 D2549020500600 D2549020501000 D2549020501400 D2549020502800 D2549020503200 D2549020504800 D2549020505200 D2549020506000 D2549020602000 D2549030501800 D2549030502400

58. Assembly and Installation of the Service Cabinet

A. General

This task gives you the installation and assembly procedures of the component.

B. Job Set-up Information

(1) Not applicable

C. Procedure

WARNING: BE CAREFUL WHEN YOU USE SOLVENTS/CLEANING AGENTS, SEALANTS AND OTHER MATERIALS. OBEY THE MATERIAL MANUFACTURER'S INSTRUCTIONS AND THE LOCAL REGULATIONS. MAKE SURE THAT THERE IS A GOOD FLOW OF AIR THROUGH THE WORK AREA. DO NOT BREATHE THE FUMES. DO NOT SMOKE. DO NOT USE THESE MATERIALS NEAR A FLAME, SPARKS OR SOURCES OF HEAT. USE PROTECTIVE CLOTHING, GOGGLES AND GLOVES. IF YOU GET ONE OF THESE MATERIALS ON YOUR SKIN OR IN YOUR EYES, FLUSH IT AWAY WITH A FLOW OF CLEAN WATER. IF YOU GET ONE OF THESE MATERIALS IN YOUR MOUTH, GET IMMEDIATE MEDICAL AID. IN GENERAL, THESE MATERIALS ARE POISONOUS, FLAMMABLE AND SKIN IRRITANTS.

CAUTION: DO ALL THE WORK ON A CLEAN, SOFT SURFACE TO PREVENT DAMAGE TO THE COMPONENTS.

CAUTION: MAKE SURE THAT ALL THE PARTS ARE CLEAN BEFORE YOU ASSEMBLE THEM.

SUB TASK 25-41-51-440-058-A01
D2549020500000 D2549020500600 D2549020501000 D2549020501400 D2549020502800 D2549020503200 D2549020504800 D2549020506000

1. Assembly and Installation of the Service Cabinet (19D-1)

(a) Install and assemble the PSU panel 19D-380 as follows:

1 Attach the printed circuit board PCB 19D-460 and the sign housing 19D-410 to the PSU panel 19D-380.

NOTE: For further instructions, see CMMV 33-26-06_DD704 (sign housing).

a Attach the lamps 19D-430 to the sign housing 19D-410.
b Attach the housing assembly 19D-420 to the sign housing 19D-410.

2 Attach the front frame 19D-400 to the PSU panel 19D-380.

3 Attach the PSU panel 19D-380 with the screws 19D-450 to the lower part service cabinet 19D-040.

4 Connect the PSU panel 19D-380 to the electrical supply.

(b) Install and assemble the service cabinet assembly 19D-010 as follows:

1 Assemble the angle 19D-160 as follows:
a Attach the part of the double-spring ball catch 19D-180 to the lavatory structure.
b Attach the part of the double-spring ball catch 19D-180 with the screws 19D-190, the washers 19D-200 and the nuts 19D-210 to the angle 19D-170.

2 Assemble the angle 19D-100 as follows:
a Attach the part of the double-spring ball catch 19D-120 to the lavatory structure.
b Attach the part of the double-spring ball catch 19D-120 with the screws 19D-130, the washers 19D-140 and the nuts 19D-150 to the angle 19D-110.

3 Attach the angles 19D-100, 19D-160 with the screws 19D-050, the washers 19D-060 and the nuts 19D-230 to the center part service cabinet 19D-030.

4 Attach the strip assembly 19D-080 with the screws 19D-050, 19D-220 and the washers 19D-060.

5 Attach the angle brackets 19D-260 with the screws 19D-070 and the washers 19D-060.

6 Attach the lower part service cabinet 19D-040 with the screws 19D-050 and the washers 19D-060.

7 Attach the lower part service cabinet 19D-040 with the screws 19D-270 to the angle brackets 19D-260.

8 Attach the chutes 19D-290 to the lower part service cabinet 19D-040.

9 Attach the soap dispenser assemblies 19D-280 to the chutes 19D-290.

10 Attach the hinge 19D-250 with the screws 19D-050 and the washers 19D-060 to the lavatory structure.

11 Attach the center part service cabinet 19D-030 with the hinge pin 19D-240 to the hinge 19D-250.

12 Attach the upper part service cabinet assembly 19D-020 with the screws 19D-050 and the washers 19D-060.

13 Attach the angle assemblies 19D-300 with the screws 19D-310, the washers 19D-320 and the nuts 19D-330 to the center part service cabinet 19D-030.

14 Attach the block 19D-340 with the screws 19D-350, the washers 19D-060 and the nuts 19D-230 to the upper part service cabinet assembly 19D-020.

(c) Attach the service box 19D-370 to the service cabinet assembly 19D-010.

SUB TASK 25-41-51-440-058-B01
D2549030501800 D2549030502400

2. Assembly and Installation of the Service Cabinet (19D-1)

(a) Install and assemble the PSU panel 19D-380 as follows:

1 Attach the printed circuit board PCB 19D-460 and the sign housing 19D-410 to the PSU panel 19D-380.

NOTE: For further instructions, see CMMV 33-26-06_DD704 (sign housing).

a Attach the lamps 19D-430 to the sign housing 19D-410.
b Attach the housing assembly 19D-420 to the sign housing 19D-410.

2 Attach the front frame 19D-400 to the PSU panel 19D-380.

3 Attach the PSU panel 19D-380 with the screws 19D-450 to the lower part service cabinet 19D-040.

4 Connect the PSU panel 19D-380 to the electrical supply.

(b) Install and assemble the service cabinet assembly 19D-010 as follows:

1 Assemble the angle 19D-160 as follows:
a Attach the part of the double-spring ball catch 19D-180 with the screws 19D-090 to the lavatory structure.
b Attach the part of the double-spring ball catch 19D-180 with the screws 19D-190, the washers 19D-200 and the nuts 19D-210 to the angle 19D-170.

2 Assemble the angle 19D-100 as follows:
a Attach the part of the double-spring ball catch 19D-120 with the screws 19D-090 to the lavatory structure.
b Attach the part of the double-spring ball catch 19D-120 with the screws 19D-130, the washers 19D-140 and the nuts 19D-150 to the angle 19D-110.

3 Attach the angles 19D-100, 19D-160 with the screws 19D-050, the washers 19D-060 and the nuts 19D-230 to the center part service cabinet 19D-030.

4 Attach the angle brackets 19D-260 with the screws 19D-070 and the washers 19D-060.

5 Attach the lower part service cabinet 19D-040 with the screws 19D-050 and the washers 19D-060.

6 Attach the lower part service cabinet 19D-040 with the screws 19D-270 to the angle brackets 19D-260.

7 Attach the hinge 19D-250 with the screws 19D-050 and the washers 19D-060 to the lavatory structure.

8 Attach the center part service cabinet 19D-030 with the hinge pin 19D-240 to the hinge 19D-250.

9 Attach the upper part service cabinet assembly 19D-020 with the screws 19D-050 and the washers 19D-060.

10 Attach the angle assemblies 19D-300 with the screws 19D-310, the washers 19D-320 and the nuts 19D-330 to the center part service cabinet 19D-030.

11 Attach the block 19D-340 with the screws 19D-350, the washers 19D-060 and the nuts 19D-230 to the upper part service cabinet assembly 19D-020.

(c) Attach the service box 19D-370 to the service cabinet assembly 19D-010.

SUB TASK 25-41-51-440-058-C01
D2549020602000

3. Assembly and Installation of the Service Cabinet (19D-1)

(a) Install and assemble the PSU panel 19D-380 as follows:

1 Attach the printed circuit board PCB 19D-460 and the sign housing 19D-410 to the PSU panel 19D-380.

NOTE: For further instructions, see CMMV 33-26-06_DD704 (sign housing).

a Attach the lamps 19D-430 to the sign housing 19D-410.
b Attach the housing assembly 19D-420 to the sign housing 19D-410.

2 Attach the front frame 19D-400 to the PSU panel 19D-380.

3 Attach the PSU panel 19D-380 with the screws 19D-450 to the lower part service cabinet 19D-040.

4 Connect the PSU panel 19D-380 to the electrical supply.

(b) Install and assemble the service cabinet assembly 19D-010 as follows:

1 Assemble the angle 19D-160 as follows:
a Attach the part of the double-spring ball catch 19D-180 with the screws 19D-090 to the lavatory structure.
b Attach the part of the double-spring ball catch 19D-180 with the screws 19D-190, the washers 19D-200 and the nuts 19D-210 to the angle 19D-170.

2 Assemble the angle 19D-100 as follows:
a Attach the part of the double-spring ball catch 19D-120 with the screws 19D-090 to the lavatory structure.
b Attach the part of the double-spring ball catch 19D-120 with the screws 19D-130, the washers 19D-140 and the nuts 19D-150 to the angle 19D-110.

3 Attach the angles 19D-100, 19D-160 with the screws 19D-050, the washers 19D-060 and the nuts 19D-230 to the center part service cabinet 19D-030.

4 Attach the angle brackets 19D-260 with the screws 19D-070 and the washers 19D-060.

5 Attach the lower part service cabinet 19D-040 with the screws 19D-050 and the washers 19D-060.

6 Attach the lower part service cabinet 19D-040 with the screws 19D-270 to the angle brackets 19D-260.

7 Attach the hinge 19D-250 with the screws 19D-050 and the washers 19D-060 to the lavatory structure.

8 Attach the center part service cabinet 19D-030 with the hinge pin 19D-240 to the hinge 19D-250.

9 Attach the upper part service cabinet assembly 19D-020 with the screws 19D-050 and the washers 19D-060.

10 Attach the angle assemblies 19D-300 with the screws 19D-310, the washers 19D-320 and the nuts 19D-330 to the center part service cabinet 19D-030.

11 Attach the block 19D-340 with the screws 19D-350, the washers 19D-060 and the nuts 19D-230 to the upper part service cabinet assembly 19D-020.

(c) Assemble the service box assembly 19D-370 as follows:

1 Attach the handle holders 19D-375 and the handle 19D-377 with the screws 19D-376.

2 Attach the drawer guides 19D-374 with the screws 19D-378.

3 Attach the drawer 19D-373 to the drawer guides 19D-374.

(d) Attach the service box assembly 19D-370 to the service cabinet assembly 19D-010.

SUB TASK 25-41-51-440-058-D01
D2549020505200

4. Assembly and Installation of the Service Cabinet (19D-1)

(a) Install and assemble the PSU panel 19D-380 as follows:

1 Attach the printed circuit board PCB 19D-460 and the sign housing 19D-410 to the PSU panel 19D-380.

NOTE: For further instructions, see CMMV 33-26-06_DD704 (sign housing).

a Attach the lamps 19D-430 to the sign housing 19D-410.
b Attach the housing assembly 19D-420 to the sign housing 19D-410.

2 Attach the front frame 19D-400 to the PSU panel 19D-380.

3 Attach the PSU panel 19D-380 with the screws 19D-450 to the lower part service cabinet 19D-040.

4 Connect the PSU panel 19D-380 to the electrical supply.

(b) Install and assemble the service cabinet assembly 19D-010 as follows:

1 Assemble the angle 19D-160 as follows:
a Attach the part of the double-spring ball catch 19D-180 to the lavatory structure.
b Attach the part of the double-spring ball catch 19D-180 with the screws 19D-190, the washers 19D-200 and the nuts 19D-210 to the angle 19D-170.

2 Assemble the angle 19D-100 as follows:
a Attach the part of the double-spring ball catch 19D-120 to the lavatory structure.
b Attach the part of the double-spring ball catch 19D-120 with the screws 19D-130, the washers 19D-140 and the nuts 19D-150 to the angle 19D-110.

3 Attach the angles 19D-100, 19D-160 with the screws 19D-050, the washers 19D-060 and the nuts 19D-230 to the center part service cabinet 19D-030.

4 Attach the strip assembly 19D-080 with the screws 19D-050, 19D-220 and the washers 19D-060.

5 Attach the angle brackets 19D-260 with the screws 19D-070 and the washers 19D-060.

6 Attach the lower part service cabinet 19D-040 with the screws 19D-050 and the washers 19D-060.

7 Attach the lower part service cabinet 19D-040 with the screws 19D-270 to the angle brackets 19D-260.

8 Attach the chutes 19D-290 to the lower part service cabinet 19D-040.

9 Attach the soap dispenser assemblies 19D-280 to the chutes 19D-290.

10 Attach the hinge 19D-250 with the screws 19D-050 and the washers 19D-060 to the lavatory structure.

11 Attach the center part service cabinet 19D-030 with the hinge pin 19D-240 to the hinge 19D-250.

12 Attach the upper part service cabinet assembly 19D-020 with the screws 19D-050 and the washers 19D-060.

13 Attach the angle assemblies 19D-300 with the screws 19D-310, the washers 19D-320 and the nuts 19D-330 to the center part service cabinet 19D-030.

14 Attach the block 19D-340 with the screws 19D-350, the washers 19D-060 and the nuts 19D-230 to the upper part service cabinet assembly 19D-020.

(c) Assemble the service box assembly 19D-370 as follows:

1 Attach the handle holders 19D-375 and the handle 19D-377 with the screws 19D-376.

2 Attach the drawer guides 19D-374 with the screws 19D-378.

3 Attach the drawer 19D-373 to the drawer guides 19D-374.

(d) Attach the service box assembly 19D-370 to the service cabinet assembly 19D-010.

TASK 25-41-51-400-807-F01

D2547160900200 D2547160900400 D2549010400000 D2549010400200 D2549010400400
D2549010400600 D2549010400800 D2549010401000 D2549010401400 D2549010401600
D2549010402000 D2549010402200 D2549010402600 D2549010402800 D2549010403000
D2549010403200 D2549010403600 D2549010403800 D2549010404000 D2549010404200
D2549010404400 D2549010404600 D2549010404800 D2549010405000 D2549010405200
D2549010405400 D2549010405800 D2549010406000 D2549010406200 D2549010406800
D2549010407000 D2549010509400 D2549010509600 D2549010509800 D2549010510000
D2549010510400 D2549010510600 D2549010510800 D2549010511000 D2549010511400
D2549010511600 D2549010512000 D2549010512200 D2549010512400 D2549010513000
D2549010513200 D2549010513600 D2549010514000 D2549010514200 D2549010514400
D2549010514600 D2549010514800 D2549010600000 D2549010600400 D2549010600600
D2549010600800 D2549010601000 D2549010601200 D2549010601400 D2549010601600
D2549010602000 D2549010602200 D2549010602400 D2549010602600 D2549010602800
D2549010603000 D2549010603200 D2549010603400 D2549010603600 D2549010603800
D2549010604000 D2549010604200 D2549010604400 D2549010604600 D2549010604800
D2549010605000 D2549010605200 D2549010605600 D2549010605800 D2549010606200
D2549010606400 D2549010606600 D2549010606800 D2549010607000 D2549010607200
D2549010607400 D2549010607600 D2549010607800 D2549010608200 D2549010608400
D2549010608600 D2549010608800 D2549010609000 D2549010609200 D2549010609400
D2549010609600 D2549010609800 D2549010610000 D2549010610200 D2549010610400
D2549010610600 D2549010610800 D2549010611000 D2549010611200 D2549010611400
D2549010611600 D2549010611800 D2549010612000 D2549010612200 D2549010612400
D2549010612600 D2549010613000 D2549010613400 D2549010613600 D2549010613800
D2549010614200 D2549010614400 D2549010614600 D2549010614800 D2549020300400
D2549020300600 D2549020300800 D2549020301000 D2549020301800 D2549020302000
D2549020302800 D2549020400200 D2549020400400 D2549020400600 D2549020400800
D2549020401000 D2549020401200 D2549020401400 D2549020401600 D2549020402000
D2549020402200 D2549020402400 D2549020402600 D2549020403000 D2549020403200
D2549020403400 D2549020403600 D2549020403800 D2549020404200 D2549020404400
D2549020404600 D2549020404800 D2549020405000 D2549020405200 D2549020405400
D2549020405600 D2549020405800 D2549020406000 D2549020406200 D2549020406400
D2549020406600 D2549020406800 D2549020407000 D2549020407200 D2549020407600
D2549020407800 D2549020408000 D2549020408200 D2549020408600 D2549020408800
D2549020409000 D2549020409200 D2549020409400 D2549020409600 D2549020409800
D2549020410200 D2549020410400 D2549020410600 D2549020410800 D2549020411000
D2549020411400 D2549020411600 D2549020412000 D2549020412400 D2549020412600
D2549020412800 D2549020413000 D2549020413200 D2549020413400 D2549020413600
D2549020413800 D2549020414000 D2549020414200 D2549020414600 D2549020502200
D2549020505600 D2549020506200 D2549020506400 D2549020506600 D2549020507000
D2549020507200 D2549020507400 D2549020507600 D2549020508000 D2549020508200
D2549020508400 D2549020508600 D2549020508800 D2549020509200 D2549020509600
D2549020509800 D2549020510000 D2549020510400 D2549020510800 D2549020511000
D2549020511200 D2549020511600 D2549020511800 D2549020512000 D2549020512200
D2549020512600 D2549020512800 D2549020513000 D2549020513200 D2549020513400
D2549020513600 D2549020513800 D2549020514000 D2549020514200 D2549020514400
D2549020514600 D2549020514800 D2549020602200 D2549020604200 D2549020604400

D2549020604600 D2549020604800 D2549020605000 D2549020605200 D2549020605400
D2549020605600 D2549020606000 D2549020606800 D2549020607000 D2549020607400
D2549020607600 D2549020607800 D2549020608200 D2549020608400 D2549020608600
D2549020608800 D2549020609000 D2549020609200 D2549020609600 D2549020609800
D2549020610000 D2549020610400 D2549020610600 D2549020610800 D2549020611000
D2549020611200 D2549020611400 D2549020611600 D2549020611800 D2549020612000
D2549020612400 D2549020612800 D2549020613000 D2549020613200 D2549020613600
D2549020613800 D2549020614000 D2549020614400 D2549020614600 D2549020614800
D2549020700200 D2549020700400 D2549020700600 D2549020700800 D2549020701000
D2549020701200 D2549020701400 D2549020701600 D2549020701800 D2549020702200
D2549020702400 D2549020702600 D2549020702800 D2549020703200 D2549020703400
D2549020704000 D2549020704200 D2549020704400 D2549020704600 D2549020704800
D2549020705000 D2549020705200 D2549020705600 D2549020705800 D2549020706000
D2549020706200 D2549020706400 D2549020706600 D2549020707000 D2549020707200
D2549020707600 D2549020707800 D2549020708200 D2549020708600 D2549020708800
D2549020709000 D2549020709200 D2549020709600 D2549020709800 D2549020710200
D2549020710400 D2549020710600 D2549020710800 D2549020711000 D2549020711400
D2549020711600 D2549020712400 D2549020712800 D2549020713200 D2549020713400
D2549020713600 D2549020713800 D2549020714000 D2549020714600 D2549020800000
D2549020800200 D2549020800400 D2549020800600 D2549020800800 D2549020801000
D2549020801200 D2549020801400 D2549020801600 D2549020801800 D2549020802000
D2549020802200 D2549020802600 D2549020802800 D2549020803000 D2549020803200
D2549020803400 D2549020803600 D2549020803800 D2549020804000 D2549020804200
D2549020804400 D2549020804800 D2549020805000 D2549020805400 D2549020805600
D2549020805800 D2549020806000 D2549020806200 D2549020806600 D2549020806800
D2549020807000 D2549020807200 D2549020807600 D2549020807800 D2549020808200
D2549020808400 D2549020808600 D2549020808800 D2549020809000 D2549020809600
D2549020809800 D2549020810000 D2549020810200 D2549020810400 D2549020810600
D2549020810800 D2549020811200 D2549020811400 D2549020811600 D2549020811800
D2549020812000 D2549020812200 D2549020812400 D2549020812600 D2549020813000
D2549020813200 D2549020813400 D2549020813600 D2549020813800 D2549020814000
D2549020814200 D2549020814400 D2549020814600 D2549020814800 D2549030400000
D2549030400200 D2549030400400 D2549030400600 D2549030401000 D2549030401200
D2549030401400 D2549030401600 D2549030401800 D2549030402000 D2549030402400
D2549030402600 D2549030402800 D2549030403000 D2549030403400 D2549030403600
D2549030403800 D2549030404000 D2549030404200 D2549030404400 D2549030404600
D2549030404800 D2549030405000 D2549030405200 D2549030405600 D2549030405800
D2549030406000 D2549030406400 D2549030406600 D2549030406800 D2549030407000
D2549030407400 D2549030407600 D2549030407800 D2549030408000 D2549030408400
D2549030409000 D2549030409200 D2549030409800 D2549030410000 D2549030410400
D2549030411200 D2549030411400 D2549030411600 D2549030411800 D2549030412000
D2549030412400 D2549030412600 D2549030412800 D2549030413000 D2549030413200
D2549030413600 D2549030414400 D2549030414800 D2549030503800 D2549030504000
D2549030504200 D2549030504600 D2549030504800 D2549030505200 D2549030505400
D2549030505600 D2549030505800 D2549030506000 D2549030506200 D2549030506400
D2549030506600 D2549030506800 D2549030507000 D2549030507800 D2549030508000
D2549030508200 D2549030508400 D2549030508800 D2549030509200 D2549030509400

D2549030509600 D2549030509800 D2549030510000 D2549030510400 D2549030510600
D2549030510800 D2549030511000 D2549030511200 D2549030511400 D2549030511600
D2549030512000 D2549030512200 D2549030512400 D2549030512800 D2549030513000
D2549030513400 D2549030513600 D2549030513800 D2549030514000 D2549030514200
D2549030514400 D2549030514600 D2549030514800 D2549030600000 D2549030600200
D2549030600600 D2549030601000 D2549030601200 D2549030601400 D2549030601800
D2549030602000 D2549030602200 D2549030602400 D2549030602600 D2549030602800
D2549030603200 D2549030603400 D2549030603800 D2549030604200 D2549030604400
D2549030604600 D2549030604800 D2549030605000 D2549030605200 D2549030605400
D2549030605600 D2549030605800 D2549030606000 D2549030606200 D2549030606400
D2549030606600 D2549030606800 D2549030607000 D2549030607400 D2549030607600
D2549030608000 D2549030608200 D2549030608400 D2549030608600 D2549030608800
D2549030609000 D2549030609200 D2549030609800 D2549030610000 D2549030610400
D2549030610600 D2549030611000 D2549030611200 D2549030611400 D2549030611600
D2549030611800 D2549030612000 D2549030612200 D2549030612400 D2549030612800
D2549030613200 D2549030613400 D2549030613600 D2549030613800 D2549030614000
D2549030614800 D2549030700000 D2549030700200 D2549030700400 D2549030701000
D2549030701400 D2549030702200 D2549030702400 D2549030702600 D2549030702800
D2549030703000 D2549030703400 D2549030703600 D2549030703800 D2549030705200
D2549040500200 D2549040500400 D2549040500600 D2549040500800 D2549040501000
D2549040501200 D2549040501400 D2549040501600 D2549040501800 D2549040502000
R225401115-000 R225401134-002 R225401134-004 R225401134-006 R225401134-008
R225401134-010 R225401134-012 R225401134-014 R225401134-016 R225401134-018
R225401134-020 R225401134-022 R225401134-024 R225401134-026 R225401134-028
R225401134-030 R225401134-032 R225401134-034 R225401134-036 R225401134-038
R225401136-000 R225401136-004 R225401136-006 R225401136-008 R225401136-010
R225401136-012 R225401136-014 R225401136-016 R225401136-018 R225401136-020
R225401136-022 R225401136-024 R225401137-000 R225401137-002 R225401137-004
R225401137-006 R225401137-008 R225401137-010 R225401137-012 R225401137-014
R225401137-016 R225401142-000 R225401142-002 R225401145-002 R225401145-004
R225401145-006 R225401145-008 R225401145-010 R225401145-012 R225401145-014
R225401152-000 R225401152-002 R225401152-004 R225401152-006 R225401152-008
R225401152-010 R225401153-000 R225401159-000 R225401160-000 R225401160-002
R225401172-000 R225401172-002 R225401172-004 R225401172-006 R225401172-008
R225401172-010 R225401172-012 R225401172-014 R225401172-016 R225401172-018
R225401176-000 R225401183-000 R225401183-002 R225401183-004 R225401183-006
R225401183-008 R225401192-000 R225401192-002 R225401195-000 R225401196-000
R225401196-002 R225401196-004 R225401196-006 R225401196-008 R225401196-010
R225401196-012 R225401196-014 R225401196-016 R225401196-018 R225401196-020
R225401196-022 R225401196-024 R225401196-034 R225401196-036 R225401196-038
R225401196-040 R225401196-042 R225401196-044 R225401196-046 R225401196-048
R225401196-050 R225401196-052 R225401196-054 R225401196-056 R225401196-058
R225401196-060 R225401196-062 R225401196-064 R225401196-066 R225401196-068
R225401196-070 R225401199-000 R225401199-002 R225401199-004 R225401199-006
R225401199-008 R225401199-010 R225401199-012 R225401600-000 R225401600-002
R225401600-004 R225401602-000 R225401603-000 R225401605-000 R225401605-002
R225401609-000 R225401611-000 R225401611-006 R225401611-008 R225401611-010

R225401611-012 R225401611-014 R225401611-016 R225401611-018 R225401611-020
R225401613-000 R225401614-000 R225401618-000 R225401618-002 R225401619-000
R225401619-002 R225401622-000 R225401622-002 R225401624-000 R225401627-000
R225401627-002 R225401627-004 R225401629-000 R225401629-002 R225401639-000
R225401639-002 R225401643-000 R225401643-002 R225401643-004 R225401643-006
R225401643-008 R225401646-000 R225401646-002 R225401647-000 R225401648-000
R225401648-002 R225401648-004 R225401648-006 R225401648-008 R225401649-000
R225401656-000 R225401656-002 R225401658-000 R225401662-000 R225401662-002
R225401673-000 R225401673-002 R225401673-004 R225401673-006 R225401676-000
R225401683-000 R225401685-000 R225401685-002 R225401689-004 R225401689-006
R225401691-000 R225401691-002 R225401693-000 R225401697-002 R225401803-000
R225401803-002 R225401811-000

59. Assembly and Installation of the Service Cabinet

A. General

This task gives you the installation and assembly procedures of the component.

B. Procedure

WARNING: BE CAREFUL WHEN YOU USE SOLVENTS/CLEANING AGENTS, SEALANTS AND OTHER MATERIALS. OBEY THE MATERIAL MANUFACTURER'S INSTRUCTIONS AND THE LOCAL REGULATIONS. MAKE SURE THAT THERE IS A GOOD FLOW OF AIR THROUGH THE WORK AREA. DO NOT BREATHE THE FUMES. DO NOT SMOKE. DO NOT USE THESE MATERIALS NEAR A FLAME, SPARKS OR SOURCES OF HEAT. USE PROTECTIVE CLOTHING, GOGGLES AND GLOVES. IF YOU GET ONE OF THESE MATERIALS ON YOUR SKIN OR IN YOUR EYES, FLUSH IT AWAY WITH A FLOW OF CLEAN WATER. IF YOU GET ONE OF THESE MATERIALS IN YOUR MOUTH, GET IMMEDIATE MEDICAL AID. IN GENERAL, THESE MATERIALS ARE POISONOUS, FLAMMABLE AND SKIN IRRITANTS.

CAUTION: DO ALL THE WORK ON A CLEAN, SOFT SURFACE TO PREVENT DAMAGE TO THE COMPONENTS.

CAUTION: MAKE SURE THAT ALL THE PARTS ARE CLEAN BEFORE YOU ASSEMBLE THEM.

SUB TASK 25-41-51-400-123-A01

D2547160900200 D2547160900400 D2549010400000 D2549010400200
D2549010400400 D2549010400600 D2549010400800 D2549010401000
D2549010401400 D2549010401600 D2549010402000 D2549010402200
D2549010402600 D2549010402800 D2549010403200 D2549010403800
D2549010404000 D2549010404200 D2549010404400 D2549010404600
D2549010404800 D2549010405000 D2549010405200 D2549010405400

D2549010405800 D2549010406000 D2549010406200 D2549010407000
D2549010509600 D2549010509800 D2549010510400 D2549010510600
D2549010510800 D2549010511000 D2549010511600 D2549010512000
D2549010512400 D2549010513000 D2549010513200 D2549010513600
D2549010514000 D2549010514200 D2549010514400 D2549010514600
D2549010514800 D2549010600000 D2549010600400 D2549010600600
D2549010601000 D2549010601200 D2549010601400 D2549010601600
D2549010602400 D2549010602600 D2549010602800 D2549010603000
D2549010603200 D2549010603400 D2549010603600 D2549010604000
D2549010604400 D2549010604800 D2549010605000 D2549010605200
D2549010605600 D2549010605800 D2549010606200 D2549010606400
D2549010606800 D2549010607000 D2549010607200 D2549010607400
D2549010607600 D2549010607800 D2549010608200 D2549010608400
D2549010608600 D2549010608800 D2549010609000 D2549010609400
D2549010609800 D2549010610000 D2549010610200 D2549010610400
D2549010610600 D2549010610800 D2549010611000 D2549010611200
D2549010611400 D2549010611600 D2549010611800 D2549010612000
D2549010612200 D2549010612400 D2549010612600 D2549010613400
D2549010613600 D2549010613800 D2549010614200 D2549010614400
D2549010614600 D2549010614800 D2549020300400 D2549020300600
D2549020300800 D2549020301000 D2549020301800 D2549020302000
D2549020302800 D2549020400200 D2549020400400 D2549020400600
D2549020400800 D2549020401000 D2549020401400 D2549020401600
D2549020402000 D2549020402200 D2549020402400 D2549020402600
D2549020403200 D2549020403400 D2549020403600 D2549020403800
D2549020404200 D2549020404400 D2549020404600 D2549020404800
D2549020405000 D2549020405200 D2549020405400 D2549020405600
D2549020405800 D2549020406000 D2549020406200 D2549020406400
D2549020406600 D2549020406800 D2549020407000 D2549020407200
D2549020407600 D2549020407800 D2549020408000 D2549020408200
D2549020408600 D2549020408800 D2549020409000 D2549020409200
D2549020409400 D2549020409600 D2549020409800 D2549020410200
D2549020410400 D2549020410600 D2549020410800 D2549020411000
D2549020411400 D2549020411600 D2549020412000 D2549020412400
D2549020412600 D2549020412800 D2549020413000 D2549020413200
D2549020413600 D2549020413800 D2549020414000 D2549020414200
D2549020414600 D2549020502200 D2549020505600 D2549020506600
D2549020507400 D2549020507600 D2549020508000 D2549020508400
D2549020508600 D2549020508800 D2549020509200 D2549020509600
D2549020509800 D2549020510000 D2549020510400 D2549020510800
D2549020511000 D2549020511200 D2549020511600 D2549020511800
D2549020512000 D2549020512200 D2549020512600 D2549020513000
D2549020513200 D2549020513600 D2549020513800 D2549020514200
D2549020514400 D2549020514600 D2549020514800 D2549020602200
D2549020604200 D2549020604400 D2549020604600 D2549020604800
D2549020605200 D2549020605400 D2549020606000 D2549020606800
D2549020607000 D2549020607400 D2549020607600 D2549020607800

D2549020608600 D2549020608800 D2549020609000 D2549020609200
D2549020609600 D2549020609800 D2549020610000 D2549020610800
D2549020611000 D2549020611200 D2549020611400 D2549020611600
D2549020611800 D2549020612000 D2549020612400 D2549020612800
D2549020613000 D2549020613200 D2549020613800 D2549020614600
D2549020614800 D2549020700200 D2549020700400 D2549020700600
D2549020701200 D2549020701400 D2549020701600 D2549020701800
D2549020702200 D2549020702600 D2549020702800 D2549020703400
D2549020704200 D2549020704400 D2549020704600 D2549020704800
D2549020705000 D2549020705200 D2549020705600 D2549020705800
D2549020706000 D2549020706200 D2549020706400 D2549020706600
D2549020707000 D2549020707200 D2549020707600 D2549020707800
D2549020708200 D2549020708600 D2549020708800 D2549020709000
D2549020709200 D2549020709800 D2549020710200 D2549020710400
D2549020710600 D2549020710800 D2549020711400 D2549020711600
D2549020712400 D2549020712800 D2549020713200 D2549020713400
D2549020713600 D2549020713800 D2549020714000 D2549020714600
D2549020800000 D2549020800200 D2549020800400 D2549020800600
D2549020800800 D2549020801200 D2549020801400 D2549020801800
D2549020802000 D2549020802200 D2549020802600 D2549020802800
D2549020803000 D2549020803200 D2549020803400 D2549020803600
D2549020803800 D2549020804000 D2549020804200 D2549020804400
D2549020804800 D2549020805000 D2549020805400 D2549020805600
D2549020805800 D2549020806000 D2549020806200 D2549020806600
D2549020806800 D2549020807000 D2549020807200 D2549020807600
D2549020807800 D2549020808200 D2549020808400 D2549020808600
D2549020808800 D2549020809000 D2549020809600 D2549020809800
D2549020810000 D2549020810200 D2549020810400 D2549020810600
D2549020810800 D2549020811400 D2549020811600 D2549020811800
D2549020812000 D2549020812200 D2549020812400 D2549020812600
D2549020813000 D2549020813200 D2549020813400 D2549020813600
D2549020813800 D2549020814000 D2549020814200 D2549020814400
D2549020814600 D2549020814800 D2549030400000 D2549030400200
D2549030400400 D2549030400600 D2549030401200 D2549030401400
D2549030401600 D2549030401800 D2549030402600 D2549030402800
D2549030403000 D2549030403800 D2549030404000 D2549030404200
D2549030404800 D2549030405000 D2549030405600 D2549030405800
D2549030406000 D2549030406400 D2549030406600 D2549030406800
D2549030407000 D2549030407400 D2549030407600 D2549030407800
D2549030408000 D2549030408400 D2549030409200 D2549030409800
D2549030410000 D2549030410400 D2549030411200 D2549030411400
D2549030411600 D2549030412000 D2549030412400 D2549030412600
D2549030412800 D2549030413000 D2549030413200 D2549030413600
D2549030414400 D2549030414800 D2549030503800 D2549030504000
D2549030504200 D2549030504800 D2549030505600 D2549030506000
D2549030506200 D2549030507000 D2549030508000 D2549030508200
D2549030508400 D2549030508800 D2549030509800 D2549030510000

D2549030510400 D2549030510600 D2549030510800 D2549030511000
D2549030511200 D2549030511400 D2549030511600 D2549030512000
D2549030512200 D2549030512400 D2549030512800 D2549030513400
D2549030514200 D2549030514600 D2549030514800 D2549030600000
D2549030600200 D2549030600600 D2549030601000 D2549030601400
D2549030602000 D2549030602200 D2549030602400 D2549030602600
D2549030603200 D2549030604200 D2549030604400 D2549030604600
D2549030605000 D2549030605600 D2549030605800 D2549030606000
D2549030606200 D2549030606400 D2549030606600 D2549030606800
D2549030608000 D2549030608200 D2549030608400 D2549030608600
D2549030609000 D2549030609200 D2549030609800 D2549030610000
D2549030610400 D2549030611000 D2549030611600 D2549030611800
D2549030612000 D2549030612200 D2549030612400 D2549030613400
D2549030613600 D2549030613800 D2549030614000 D2549030614800
D2549030700000 D2549030700400 D2549030701000 D2549030701400
D2549030702200 D2549030702400 D2549030702800 D2549030703000
D2549030703400 D2549030703800 D2549030705200 D2549040500200
D2549040500400 D2549040500600 D2549040500800 D2549040501000
D2549040501200 D2549040501400 D2549040501600 D2549040501800
D2549040502000 R225401115-000 R225401136-000 R225401136-004 R225401136-006
R225401136-008 R225401136-010 R225401136-012 R225401136-014 R225401136-018
R225401136-020 R225401136-022 R225401136-024 R225401142-000 R225401142-002
R225401145-002 R225401145-004 R225401145-006 R225401145-008 R225401145-010
R225401145-012 R225401145-014 R225401152-000 R225401152-002 R225401152-004
R225401152-006 R225401152-008 R225401152-010 R225401153-000 R225401159-000
R225401160-000 R225401160-002 R225401172-000 R225401172-002 R225401172-004
R225401172-006 R225401172-008 R225401172-010 R225401172-012 R225401172-014
R225401172-016 R225401172-018 R225401176-000 R225401183-000 R225401183-002
R225401183-004 R225401183-006 R225401183-008 R225401192-000 R225401192-002
R225401195-000 R225401196-000 R225401196-002 R225401196-004 R225401196-006
R225401196-008 R225401196-010 R225401196-012 R225401196-014 R225401196-016
R225401196-018 R225401196-020 R225401196-022 R225401196-024 R225401196-034
R225401196-036 R225401196-038 R225401196-040 R225401196-042 R225401196-044
R225401196-046 R225401196-048 R225401196-050 R225401196-052 R225401196-054
R225401196-056 R225401196-058 R225401196-060 R225401196-062 R225401196-064
R225401196-066 R225401196-068 R225401196-070 R225401199-000 R225401199-002
R225401199-004 R225401199-006 R225401199-008 R225401199-010 R225401199-012
R225401602-000 R225401603-000 R225401605-000 R225401605-002 R225401609-
000 R225401611-000 R225401611-006 R225401611-008 R225401611-010 R225401611-
012 R225401611-014 R225401611-016 R225401611-018 R225401611-020
R225401613-000 R225401614-000 R225401618-000 R225401618-002 R225401619-
000 R225401619-002 R225401622-000 R225401622-002 R225401624-000
R225401627-000 R225401627-002 R225401627-004 R225401629-000 R225401629-
002 R225401639-000 R225401639-002 R225401643-000 R225401643-002
R225401643-004 R225401643-006 R225401643-008 R225401646-000 R225401646-
002 R225401647-000 R225401648-000 R225401648-002 R225401648-004
R225401648-006 R225401648-008 R225401649-000 R225401656-000 R225401656-

002 R225401658-000 R225401662-000 R225401662-002 R225401673-000 R225401673-002 R225401673-004 R225401673-006 R225401676-000 R225401683-000 R225401685-000 R225401685-002 R225401688-000 R225401689-004 R225401689-006 R225401691-000 R225401691-002 R225401693-000 R225401697-000 R225401697-002 R225401803-000 R225401803-002 R225401811-000

1. Assembly and Installation of the Service Cabinet (19E-1)

(a) Install the label 19E-400 and the protective film 19E-410.

(b) Install and assemble the passenger service unit PSU 19E-290 as follows:

1 Attach the call switch wire-harness 19E-380 to the bracket 19E-390.

2 Attach the sign housing 19E-350 to the bracket 19E-390.

3 Attach the shaver outlet 19E-360 with the set screw 19E-370 to the bracket 19E-390.

4 Connect the passenger service unit PSU 19E-290 to the electrical supply.

5 Attach the passenger service unit PSU 19E-290 with the set screw 19E-340 to the lower part service cabinet 19E-080.

6 Attach the front frame assembly 19E-300 to the bracket 19E-390.

(c) Install and assemble the service cabinet assembly 19E-010 as follows:

WARNING: BE VERY CAREFUL WHEN YOU REMOVE OR INSTALL THE SPRING. BECAUSE THERE IS REMAINING TENSION IN THE SPRING, IT CAN CAUSE YOU INJURY.

1 Attach the spring loaded latches 19E-130 and the bushings 19E-120 with the nuts 19E-220 and the washers 19E-230 to the upper part service cabinet assembly 19E-020 and to the lower part service cabinet 19E-080.

2 Attach the screws 19E-140 and the washers 19E-150 to the center part service cabinet 19E-070.

3 Attach the angle bracket 19E-170 with the screws 19E-185, the washers 19E-195 and the nuts 19E-197.

4 Attach the angle bracket 19E-170 with the screws 19E-180 and the washers 19E-190.

5 Attach the lower part service cabinet 19E-080 with the screws 19E-200 and the washers 19E-190.

6 Attach the lower part service cabinet 19E-080 with the screws 19E-210 to the angle brackets 19E-170.

7 Attach the hinge 19E-090 with the screws 19E-200 and the washers 19E-190 to the lavatory structure.

8 Attach the center part service cabinet 19E-070 with the hinge pin 19E-100 to the hinge 19E-090.

9 Attach the upper part service cabinet assembly 19E-020 with the screws 19E-200, 19E-205 and the washers 19E-190.

10 Attach the angle assemblies 19E-160 with the screws 19E-240, the washers 19E-250 and the nuts 19E-260 to the center part service cabinet 19E-070.

11 Attach the block 19E-030 with the screws 19E-040, the washers 19E-060 and the nuts 19E-050 to the upper part service cabinet assembly 19E-020.

(d) Assemble the service box assembly 19E-270 as follows:

1 Attach the handle holders 19E-275 and the handle 19E-277 with the screws 19E-276.

2 Attach the drawer guides 19E-274 with the screws 19E-278.

3 Attach the drawer 19E-273 to the drawer guides 19E-274.

(e) Attach the service box assembly 19E-270 to the service cabinet assembly 19E-010.

SUB TASK 25-41-51-400-123-B01

D2549010403000 D2549010403600 D2549010406800 D2549010509400
D2549010511400 D2549010512200 D2549010600800 D2549010603800
D2549010604200 D2549010606600 D2549010609200 D2549010609600
D2549010613000 D2549020403000 D2549020508200 D2549020512800
D2549020513400 D2549020605600 D2549020608200 D2549020610600
D2549020613600 D2549020702400 D2549020703200 D2549020801000
D2549030402000 D2549030403400 D2549030404600 D2549030405200
D2549030409000 D2549030411800 D2549030505200 D2549030506400
D2549030507800 D2549030509200 D2549030513000 D2549030513600
D2549030602800 D2549030604800 D2549030607000 D2549030610600

D2549030612800 D2549030703600 R225401134-002 R225401134-004 R225401134-006 R225401134-008 R225401134-010 R225401134-012 R225401134-014 R225401134-016 R225401134-018 R225401134-020 R225401134-022 R225401134-024 R225401134-026 R225401134-028 R225401134-030 R225401134-032 R225401134-034 R225401134-036 R225401134-038 R225401137-000 R225401137-002 R225401137-004 R225401137-006 R225401137-008 R225401137-010 R225401137-012 R225401137-014 R225401137-016 R225401600-000 R225401600-002 R225401600-004

2. Assembly and Installation of the Service Cabinet (19E-1)

(a) Install the label 19E-400 and the protective film 19E-410.

(b) Install and assemble the passenger service unit PSU 19E-290 as follows:

1 Attach the call switch wire-harness 19E-380 to the bracket 19E-390.

2 Attach the sign housing 19E-350 to the bracket 19E-390.

3 Attach the shaver outlet 19E-360 with the set screw 19E-370 to the bracket 19E-390.

4 Connect the passenger service unit PSU 19E-290 to the electrical supply.

5 Attach the passenger service unit PSU 19E-290 with the set screw 19E-340 to the lower part service cabinet 19E-080.

6 Attach the front frame assembly 19E-300 to the bracket 19E-390.

(c) Install and assemble the service cabinet assembly 19E-010 as follows:

WARNING: BE VERY CAREFUL WHEN YOU REMOVE OR INSTALL THE SPRING. BECAUSE THERE IS REMAINING TENSION IN THE SPRING, IT CAN CAUSE YOU INJURY.

1 Attach the spring loaded latches 19E-130 and the bushings 19E-120 with the nuts 19E-220 and the washers 19E-230 to the upper part service cabinet assembly 19E-020 and to the lower part service cabinet 19E-080.

2 Attach the screws 19E-140 and the washers 19E-150 to the center part service cabinet 19E-070.

3 Attach the angle brackets 19E-170 with the screws 19E-180 and the washers 19E-190.

4 Attach the lower part service cabinet 19E-080 with the screws 19E-200 and the washers 19E-190.

5 Attach the lower part service cabinet 19E-080 with the screws 19E-210 to the angle brackets 19E-170.

6 Attach the chutes 19E-264 to the lower part service cabinet 19E-080.

7 Attach the soap dispenser assemblies 19E-262 to the chutes 19E-264.

8 Attach the hinge 19E-090 with the screws 19E-200 and the washers 19E-190 to the lavatory structure.

9 Attach the center part service cabinet 19E-070 with the hinge pin 19E-100 to the hinge 19E-090.

10 Attach the upper part service cabinet assembly 19E-020 with the screws 19E-200 and the washers 19E-190.

11 Attach the angle assemblies 19E-160 with the screws 19E-240, the washers 19E-250 and the nuts 19E-260 to the center part service cabinet 19E-070.

12 Attach the block 19E-030 with the screws 19E-040, the washers 19E-060 and the nuts 19E-050 to the upper part service cabinet assembly 19E-020.

(d) Assemble the service box assembly 19E-270 as follows:

1 Attach the handle holders 19E-275 and the handle 19E-277 with the screws 19E-276.

2 Attach the drawer guides 19E-274 with the screws 19E-278.

3 Attach the drawer 19E-273 to the drawer guides 19E-274.

(e) Attach the service box assembly 19E-270 to the service cabinet assembly 19E-010.

SUB TASK 25-41-51-400-123-C01

D2549020401200 D2549020413400 D2549020514000 D2549020605000
D2549020608400 D2549020610400 D2549020614000 D2549020614400
D2549020700800 D2549020704000 D2549020709600 D2549020711000
D2549020801600 D2549020811200 D2549030401000 D2549030402400
D2549030403600 D2549030404400 D2549030505400 D2549030505800
D2549030506600 D2549030506800 D2549030509400 D2549030509600
D2549030513800 D2549030514000 D2549030514400 D2549030601200
D2549030601800 D2549030603400 D2549030603800 D2549030605200
D2549030605400 D2549030607400 D2549030607600 D2549030608800

D2549030611200 D2549030611400 D2549030613200 D2549030700200 D2549030702600 R225401136-016

3. Assembly and Installation of the Service Cabinet (19E-1)

(a) Install the label 19E-400.

(b) Install and assemble the passenger service unit PSU 19E-290 as follows:

1 Attach the call switch wire-harness 19E-380 to the bracket 19E-390.

2 Attach the sign housing 19E-350 to the bracket 19E-390.

3 Connect the passenger service unit PSU 19E-290 to the electrical supply.

4 Attach the passenger service unit PSU 19E-290 with the set screw 19E-340 to the lower part service cabinet 19E-080.

5 Attach the front frame assembly 19E-300 to the bracket 19E-390.

(c) Install and assemble the service cabinet assembly 19E-010 as follows:

WARNING: BE VERY CAREFUL WHEN YOU REMOVE OR INSTALL THE SPRING. BECAUSE THERE IS REMAINING TENSION IN THE SPRING, IT CAN CAUSE YOU INJURY.

1 Attach the spring loaded latches 19E-130 and the bushings 19E-120 with the nuts 19E-220 and the washers 19E-230 to the upper part service cabinet assembly 19E-020 and to the lower part service cabinet 19E-080.

2 Attach the screws 19E-140 and the washers 19E-150 to the center part service cabinet 19E-070.

3 Attach the angle brackets 19E-170 with the screws 19E-180 and the washers 19E-190.

4 Attach the lower part service cabinet 19E-080 with the screws 19E-200 and the washers 19E-190.

5 Attach the lower part service cabinet 19E-080 with the screws 19E-210 to the angle brackets 19E-170.

6 Attach the hinge 19E-090 with the screws 19E-200 and the washers 19E-190 to the lavatory structure.

7 Attach the center part service cabinet 19E-070 with the hinge pin 19E-100 to the hinge 19E-090.

8 Attach the upper part service cabinet assembly 19E-020 with the screws 19E-200 and the washers 19E-190.

9 Attach the angle assemblies 19E-160 with the screws 19E-240, the washers 19E-250 and the nuts 19E-260 to the center part service cabinet 19E-070.

10 Attach the block 19E-030 with the screws 19E-040, the washers 19E-060 and the nuts 19E-050 to the upper part service cabinet assembly 19E-020.

(d) Assemble the service box assembly 19E-270 as follows:

1 Attach the handle holders 19E-275 and the handle 19E-277 with the screws 19E-276.

2 Attach the drawer guides 19E-274 with the screws 19E-278.

3 Attach the drawer 19E-273 to the drawer guides 19E-274.

(e) Attach the service box assembly 19E-270 to the service cabinet assembly 19E-010.

SUB TASK 25-41-51-400-123-D01
D2549020506200 D2549020506400 D2549020507000 D2549020507200 D2549020701000

4. Assembly and Installation of the Service Cabinet (19E-1)

(a) Install and assemble the passenger service unit PSU 19E-290 as follows:

1 Attach the call switch wire-harness 19E-380 to the bracket 19E-390.

2 Attach the sign housing 19E-350 to the bracket 19E-390.

3 Connect the passenger service unit PSU 19E-290 to the electrical supply.

4 Attach the passenger service unit PSU 19E-290 with the set screw 19E-340 to the lower part service cabinet 19E-080.

5 Attach the front frame assembly 19E-300 to the bracket 19E-390.

(b) Install and assemble the service cabinet assembly 19E-010 as follows:

WARNING: BE VERY CAREFUL WHEN YOU REMOVE OR INSTALL THE SPRING. BECAUSE THERE IS REMAINING TENSION IN THE SPRING, IT CAN CAUSE YOU INJURY.

1 Attach the spring loaded latches 19E-130 and the bushings 19E-120 with the nuts 19E-220 and the washers 19E-230 to the upper part service cabinet assembly 19E-020 and to the lower part service cabinet 19E-080.

2 Attach the screws 19E-140 and the washers 19E-150 to the center part service cabinet 19E-070.

3 Attach the angle brackets 19E-170 with the screws 19E-180 and the washers 19E-190.

4 Attach the lower part service cabinet 19E-080 with the screws 19E-200 and the washers 19E-190.

5 Attach the lower part service cabinet 19E-080 with the screws 19E-210 to the angle brackets 19E-170.

6 Attach the chutes 19E-264 to the lower part service cabinet 19E-080.

7 Attach the soap dispenser assemblies 19E-262 to the chutes 19E-264.

8 Attach the hinge 19E-090 with the screws 19E-200 and the washers 19E-190 to the lavatory structure.

9 Attach the center part service cabinet 19E-070 with the hinge pin 19E-100 to the hinge 19E-090.

10 Attach the upper part service cabinet assembly 19E-020 with the screws 19E-200 and the washers 19E-190.

11 Attach the angle assemblies 19E-160 with the screws 19E-240, the washers 19E-250 and the nuts 19E-260 to the center part service cabinet 19E-070.

12 Attach the block 19E-030 with the screws 19E-040, the washers 19E-060 and the nuts 19E-050 to the upper part service cabinet assembly 19E-020.

(c) Assemble the service box assembly 19E-270 as follows:

1 Attach the handle holders 19E-275 and the handle 19E-277 with the screws 19E-276.

2 Attach the drawer guides 19E-274 with the screws 19E-278.

3 Attach the drawer 19E-273 to the drawer guides 19E-274.

(d) Attach the service box assembly 19E-270 to the service cabinet assembly 19E-010.

SUB TASK 25-41-51-400-123-E01
D2549010510000 D2549010602000 D2549010602200 D2549010604600 D2549030504600

5. Assembly and Installation of the Service Cabinet (19E-1)

(a) Install and assemble the passenger service unit PSU 19E-290 as follows:

1 Attach the call switch wire-harness 19E-380 to the bracket 19E-390.

2 Attach the sign housing 19E-350 to the bracket 19E-390.

3 Attach the shaver outlet 19E-360 with the set screw 19E-370 to the bracket 19E-390.

4 Connect the passenger service unit PSU 19E-290 to the electrical supply.

5 Attach the passenger service unit PSU 19E-290 with the set screw 19E-340 to the lower part service cabinet 19E-080.

6 Attach the front frame assembly 19E-300 to the bracket 19E-390.

(b) Install and assemble the service cabinet assembly 19E-010 as follows:

WARNING: BE VERY CAREFUL WHEN YOU REMOVE OR INSTALL THE SPRING. BECAUSE THERE IS REMAINING TENSION IN THE SPRING, IT CAN CAUSE YOU INJURY.

1 Attach the spring loaded latches 19E-130 and the bushings 19E-120 with the nuts 19E-220 and the washers 19E-230 to the upper part service cabinet assembly 19E-020 and to the lower part service cabinet 19E-080.

2 Attach the screws 19E-140 and the washers 19E-150 to the center part service cabinet 19E-070.

3 Attach the angle brackets 19E-170 with the screws 19E-180 and the washers 19E-190.

4 Attach the lower part service cabinet 19E-080 with the screws 19E-200 and the washers 19E-190.

5 Attach the lower part service cabinet 19E-080 with the screws 19E-210 to the angle brackets 19E-170.

6 Attach the hinge 19E-090 with the screws 19E-200 and the washers 19E-190 to the lavatory structure.

7 Attach the center part service cabinet 19E-070 with the hinge pin 19E-100 to the hinge 19E-090.

8 Attach the upper part service cabinet assembly 19E-020 with the screws 19E-200 and the washers 19E-190.

9 Attach the angle assemblies 19E-160 with the screws 19E-240, the washers 19E-250 and the nuts 19E-260 to the center part service cabinet 19E-070.

10 Attach the block 19E-030 with the screws 19E-040, the washers 19E-060 and the nuts 19E-050 to the upper part service cabinet assembly 19E-020.

(c) Attach the service boxes 19E-265 to the service cabinet assembly 19E-010.

TASK 25-41-51-400-807-G01

D2549010401800 D2549010405600 D2549010510200 D2549010511800 D2549010512600
D2549010513400 D2549010513800 D2549010600200 D2549010601800 D2549010606000
D2549010613200 D2549020300000 D2549020301600 D2549020411800 D2549020412200
D2549020414800 D2549020506800 D2549020507800 D2549020509000 D2549020510600
D2549020512400 D2549020605800 D2549020609400 D2549020610200 D2549020612200
D2549020612600 D2549020700000 D2549020702000 D2549020703600 D2549020703800
D2549020705400 D2549020706800 D2549020707400 D2549020708000 D2549020708400
D2549020709400 D2549020710000 D2549020711200 D2549020712200 D2549020713000
D2549020714400 D2549020802400 D2549020805200 D2549020806400 D2549020807400
D2549020809400 D2549030402200 D2549030405400 D2549030407200 D2549030408200
D2549030408600 D2549030409400 D2549030410600 D2549030410800 D2549030412200
D2549030413400 D2549030414200 D2549030414600 D2549030507200 D2549030507400
D2549030507600 D2549030508600 D2549030509000 D2549030510200 D2549030511800
D2549030513200 D2549030600400 D2549030600800 D2549030601600 D2549030603000
D2549030603600 D2549030607200 D2549030607800 D2549030612600 D2549030614200
D2549030614400 D2549030614600 D2549030701600 D2549030701800 D2549030703200
D2549030704000 D2549030704200 D2549030704400 D2549030705600 R225401107-004
R225401168-000 R225401168-002 R225401168-004 R225401168-006 R225401168-008
R225401168-010 R225401168-012 R225401168-014 R225401168-016 R225401168-018
R225401168-020 R225401168-022 R225401168-024 R225401168-026 R225401168-028
R225401175-000 R225401175-002 R225401625-000 R225401808-000 R225401814-000

60. Assembly and Installation of the Service Cabinet

A. General

This task gives you the installation and assembly procedures of the component.

B. Procedure

WARNING: BE CAREFUL WHEN YOU USE SOLVENTS/CLEANING AGENTS, SEALANTS AND OTHER MATERIALS. OBEY THE MATERIAL MANUFACTURER'S INSTRUCTIONS AND THE LOCAL REGULATIONS. MAKE SURE THAT THERE IS A GOOD FLOW OF AIR THROUGH THE WORK AREA. DO NOT BREATHE THE FUMES. DO NOT SMOKE. DO NOT USE THESE MATERIALS NEAR A FLAME, SPARKS OR SOURCES OF HEAT. USE PROTECTIVE CLOTHING, GOGGLES AND GLOVES. IF YOU GET ONE OF THESE MATERIALS ON YOUR SKIN OR IN YOUR EYES, FLUSH IT AWAY WITH A FLOW OF CLEAN WATER. IF YOU GET ONE OF THESE MATERIALS IN YOUR MOUTH, GET IMMEDIATE MEDICAL AID. IN GENERAL, THESE MATERIALS ARE POISONOUS, FLAMMABLE AND SKIN IRRITANTS.

CAUTION: DO ALL THE WORK ON A CLEAN, SOFT SURFACE TO PREVENT DAMAGE TO THE COMPONENTS.

CAUTION: **MAKE SURE THAT ALL THE PARTS ARE CLEAN BEFORE YOU ASSEMBLE THEM.**

SUB TASK 25-41-51-400-124-A01
D2549010401800 D2549010510200 D2549010511800 D2549010512600
D2549010513400 D2549010601800 D2549010606000 D2549010613200
D2549020506800 D2549020609400 D2549020612600 D2549020703600
D2549020703800 D2549020706800 D2549020711200 D2549020712200
D2549030509000 R225401107-004

1. Assembly and Installation of the Service Cabinet (19F-1)

   (a) Install the label 19F-470.

   (b) Install and assemble the passenger service unit PSU 19F-360 as follows:

      1 Attach the call switch wire-harness 19F-450 to the bracket 19F-460.

      2 Attach the sign housing 19F-420 to the bracket 19F-460.

      3 Attach the shaver outlet 19F-430 with the set screw 19F-440 to the bracket 19F-460.

      4 Connect the passenger service unit PSU 19F-360 to the electrical supply.

      5 Attach the passenger service unit PSU 19F-360 with the set screw 19F-410 to the lower part service cabinet 19F-080.

      6 Attach the front frame assembly 19F-370 to the bracket 19F-460.

   (c) Install and assemble the service cabinet assembly 19F-010 as follows:

      WARNING: **BE VERY CAREFUL WHEN YOU REMOVE OR INSTALL THE SPRING. BECAUSE THERE IS REMAINING TENSION IN THE SPRING, IT CAN CAUSE YOU INJURY.**

      1 Attach the spring loaded latches 19F-130 and the bushings 19F-120 with the nuts 19F-220 and the washers 19F-230 to the upper part service cabinet assembly 19F-020 and to the lower part service cabinet 19F-080.

      2 Attach the screws 19F-140 and the washers 19F-150 to the center part service cabinet 19F-070.

      3 Attach the angle brackets 19F-170 with the screws 19F-180 and the washers 19F-190.

4 Attach the lower part service cabinet 19F-080 with the screws 19F-200 and the washers 19F-190.

5 Attach the lower part service cabinet 19F-080 with the screws 19F-210 to the angle brackets 19F-170.

6 Attach the chutes 19F-280 to the lower part service cabinet 19F-080.

7 Attach the soap dispenser assemblies 19F-270 to the chutes 19F-280.

8 Attach the hinge 19F-090 with the screws 19F-200 and the washers 19F-190 to the lavatory structure.

9 Attach the center part service cabinet 19F-070 with the hinge pin 19F-100 to the hinge 19F-090.

10 Attach the upper part service cabinet assembly 19F-020 with the screws 19F-200 and the washers 19F-190.

11 Attach the angle assemblies 19F-160 with the screws 19F-240, the washers 19F-250 and the nuts 19F-260 to the center part service cabinet 19F-070.

12 Attach the block 19F-030 with the screws 19F-040, the washers 19F-060 and the nuts 19F-050 to the upper part service cabinet assembly 19F-020.

(d) Assemble the service box assembly 19F-290 as follows:

1 Attach the handle holders 19F-320 and the handle 19F-340 with the screws 19F-330.

2 Attach the drawer guides 19F-310 with the screws 19F-350.

3 Attach the drawer 19F-300 to the drawer guides 19F-310.

(e) Attach the service box assembly 19F-290 to the service cabinet assembly 19F-010.

SUB TASK 25-41-51-400-124-B01

D2549010405600 D2549010513800 D2549010600200 D2549020300000
D2549020301600 D2549020411800 D2549020412200 D2549020414800
D2549020509000 D2549020510600 D2549020512400 D2549020610200
D2549020612200 D2549020700000 D2549020702000 D2549020705400
D2549020707400 D2549020708000 D2549020709400 D2549020710000
D2549020713000 D2549020714400 D2549020802400 D2549020805200
D2549020806400 D2549020807400 D2549020809400 D2549030402200

D2549030405400 D2549030407200 D2549030408200 D2549030408600 D2549030409400 D2549030410600 D2549030410800 D2549030412200 D2549030413400 D2549030414200 D2549030414600 D2549030507200 D2549030507400 D2549030507600 D2549030508600 D2549030510200 D2549030511800 D2549030513200 D2549030600400 D2549030600800 D2549030601600 D2549030603000 D2549030603600 D2549030607200 D2549030607800 D2549030612600 D2549030614200 D2549030614400 D2549030614600 D2549030701600 D2549030701800 D2549030703200 D2549030704000 D2549030704200 D2549030704400 D2549030705600 R225401168-000 R225401168-002 R225401168-004 R225401168-006 R225401168-008 R225401168-010 R225401168-012 R225401168-014 R225401168-016 R225401168-018 R225401168-020 R225401168-022 R225401168-024 R225401168-026 R225401168-028 R225401175-000 R225401175-002 R225401625-000 R225401808-000 R225401814-000

2. Assembly and Installation of the Service Cabinet (19F-1)

(a) Attach the label 19F-470 and the protective film 19F-480.

(b) Install and assemble the passenger service unit PSU 19F-360 as follows:

1 Attach the call switch wire-harness 19F-450 to the bracket 19F-460.

2 Attach the sign housing 19F-420 to the bracket 19F-460.

3 Attach the shaver outlet 19F-430 with the set screw 19F-440 to the bracket 19F-460.

4 Connect the passenger service unit PSU 19F-360 to the electrical supply.

5 Attach the passenger service unit PSU 19F-360 with the set screw 19F-410 to the lower part service cabinet 19F-080.

6 Attach the front frame assembly 19F-370 to the bracket 19F-460.

(c) Install and assemble the service cabinet assembly 19F-010 as follows:

WARNING: BE VERY CAREFUL WHEN YOU REMOVE OR INSTALL THE SPRING. BECAUSE THERE IS REMAINING TENSION IN THE SPRING, IT CAN CAUSE YOU INJURY.

1 Attach the spring loaded latches 19F-130 and the bushings 19F-120 with the nuts 19F-220 and the washers 19F-230 to the upper part service cabinet assembly 19F-020 and to the lower part service cabinet 19F-080.

2 Attach the screws 19F-140 and the washers 19F-150 to the center part service cabinet 19F-070.

3 Attach the angle brackets 19F-170 with the screws 19F-180 and the washers 19F-190.

4 Attach the lower part service cabinet 19F-080 with the screws 19F-200 and the washers 19F-190.

5 Attach the lower part service cabinet 19F-080 with the screws 19F-210 to the angle brackets 19F-170.

6 Attach the hinge 19F-090 with the screws 19F-200 and the washers 19F-190 to the lavatory structure.

7 Attach the center part service cabinet 19F-070 with the hinge pin 19F-100 to the hinge 19F-090.

8 Attach the upper part service cabinet assembly 19F-020 with the screws 19F-200 and the washers 19F-190.

9 Attach the angle assemblies 19F-160 with the screws 19F-240, the washers 19F-250 and the nuts 19F-260 to the center part service cabinet 19F-070.

10 Attach the block 19F-030 with the screws 19F-040, the washers 19F-060 and the nuts 19F-050 to the upper part service cabinet assembly 19F-020.

(d) Assemble the service box assembly 19F-290 as follows:

1 Attach the handle holders 19F-320 and the handle 19F-340 with the screws 19F-330.

2 Attach the drawer guides 19F-310 with the screws 19F-350.

3 Attach the drawer 19F-300 to the drawer guides 19F-310.

(e) Attach the service box assembly 19F-290 to the service cabinet assembly 19F-010.

SUB TASK 25-41-51-400-124-C01
D2549020507800 D2549020605800 D2549020708400

3. Assembly and Installation of the Service Cabinet (19F-1)

(a) Install and assemble the passenger service unit PSU 19F-360 as follows:

1 Attach the call switch wire-harness 19F-450 to the bracket 19F-460.

2 Attach the sign housing 19F-420 to the bracket 19F-460.

3 Attach the shaver outlet 19F-430 with the set screw 19F-440 to the bracket 19F-460.

4 Connect the passenger service unit PSU 19F-360 to the electrical supply.

5 Attach the passenger service unit PSU 19F-360 with the set screw 19F-410 to the lower part service cabinet 19F-080.

6 Attach the front frame assembly 19F-370 to the bracket 19F-460.

(b) Install and assemble the service cabinet assembly 19F-010 as follows:

WARNING: BE VERY CAREFUL WHEN YOU REMOVE OR INSTALL THE SPRING. BECAUSE THERE IS REMAINING TENSION IN THE SPRING, IT CAN CAUSE YOU INJURY.

1 Attach the spring loaded latches 19F-130 and the bushings 19F-120 with the nuts 19F-220 and the washers 19F-230 to the upper part service cabinet assembly 19F-020 and to the lower part service cabinet 19F-080.

2 Attach the screws 19F-140 and the washers 19F-150 to the center part service cabinet 19F-070.

3 Attach the angle brackets 19F-170 with the screws 19F-180 and the washers 19F-190.

4 Attach the lower part service cabinet 19F-080 with the screws 19F-200 and the washers 19F-190.

5 Attach the lower part service cabinet 19F-080 with the screws 19F-210 to the angle brackets 19F-170.

6 Attach the hinge 19F-090 with the screws 19F-200 and the washers 19F-190 to the lavatory structure.

7 Attach the center part service cabinet 19F-070 with the hinge pin 19F-100 to the hinge 19F-090.

8 Attach the upper part service cabinet assembly 19F-020 with the screws 19F-200 and the washers 19F-190.

9 Attach the angle assemblies 19F-160 with the screws 19F-240, the washers 19F-250 and the nuts 19F-260 to the center part service cabinet 19F-070.

10 Attach the block 19F-030 with the screws 19F-040, the washers 19F-060 and the nuts 19F-050 to the upper part service cabinet assembly 19F-020.

TASK 25-41-51-400-807-H01
D2549020712000 D2549020712600

61. Assembly and Installation of the Service Cabinet

A. General

This task gives you the installation and assembly procedures of the component.

B. Procedure

WARNING: BE CAREFUL WHEN YOU USE SOLVENTS/CLEANING AGENTS, SEALANTS AND OTHER MATERIALS. OBEY THE MATERIAL MANUFACTURER'S INSTRUCTIONS AND THE LOCAL REGULATIONS. MAKE SURE THAT THERE IS A GOOD FLOW OF AIR THROUGH THE WORK AREA. DO NOT BREATHE THE FUMES. DO NOT SMOKE. DO NOT USE THESE MATERIALS NEAR A FLAME, SPARKS OR SOURCES OF HEAT. USE PROTECTIVE CLOTHING, GOGGLES AND GLOVES. IF YOU GET ONE OF THESE MATERIALS ON YOUR SKIN OR IN YOUR EYES, FLUSH IT AWAY WITH A FLOW OF CLEAN WATER. IF YOU GET ONE OF THESE MATERIALS IN YOUR MOUTH, GET IMMEDIATE MEDICAL AID. IN GENERAL, THESE MATERIALS ARE POISONOUS, FLAMMABLE AND SKIN IRRITANTS.

CAUTION: DO ALL THE WORK ON A CLEAN, SOFT SURFACE TO PREVENT DAMAGE TO THE COMPONENTS.

CAUTION: MAKE SURE THAT ALL THE PARTS ARE CLEAN BEFORE YOU ASSEMBLE THEM.

SUB TASK 25-41-51-400-125-A01

1. Assembly and Installation of the Service Cabinet (19G-1)

(a) Install and assemble the upper part service cabinet assembly 19G-010 as follows:

1 Attach the upper part service cabinet assembly 19G-010 with the screws 19G-060 and the washers 19G-070 to the lavatory structure.

2 Attach the block 19G-020 with the screws 19G-040, the washers 19G-030 and the nuts 19G-050 to the upper part service cabinet assembly 19G-010.

TASK 25-41-51-400-807-J01
D2549020400000 D2549020404000 D2549020411200 D2549020812800 D2549030409600 D2549030410200 D2549030414000 D2549030700600 D2549030700800 D2549030702000 D2549030704600 D2549030704800 R225401671-000 R225401671-002 R225401675-000

62. Assembly and Installation of the Service Cabinet

A. General

This task gives you the installation and assembly procedures of the component.

B. Procedure

WARNING: BE CAREFUL WHEN YOU USE SOLVENTS/CLEANING AGENTS, SEALANTS AND OTHER MATERIALS. OBEY THE MATERIAL MANUFACTURER'S INSTRUCTIONS AND THE LOCAL REGULATIONS. MAKE SURE THAT THERE IS A GOOD FLOW OF AIR THROUGH THE WORK AREA. DO NOT BREATHE THE FUMES. DO NOT SMOKE. DO NOT USE THESE MATERIALS NEAR A FLAME, SPARKS OR SOURCES OF HEAT. USE PROTECTIVE CLOTHING, GOGGLES AND GLOVES. IF YOU GET ONE OF THESE MATERIALS ON YOUR SKIN OR IN YOUR EYES, FLUSH IT AWAY WITH A FLOW OF CLEAN WATER. IF YOU GET ONE OF THESE MATERIALS IN YOUR MOUTH, GET IMMEDIATE MEDICAL AID. IN GENERAL, THESE MATERIALS ARE POISONOUS, FLAMMABLE AND SKIN IRRITANTS.

CAUTION: DO ALL THE WORK ON A CLEAN, SOFT SURFACE TO PREVENT DAMAGE TO THE COMPONENTS.

CAUTION: MAKE SURE THAT ALL THE PARTS ARE CLEAN BEFORE YOU ASSEMBLE THEM.

SUB TASK 25-41-51-400-126-A01
D2549020812800

1. Assembly and Installation of the Service Cabinet (19H-1)

(a) Install and assemble the passenger service unit PSU 19H-300 as follows:

1 Attach the call switch wire-harness 19H-380 to the bracket 19H-385.

2 Attach the sign housing 19H-350 to the bracket 19H-385.

3 Attach the shaver outlet 19H-360 with the set screw 19H-370 to the bracket 19H-385.

4 Connect the passenger service unit PSU 19H-300 to the electrical supply.

5 Attach the passenger service unit PSU 19H-300 with the set screw 19H-340 to the lower part service cabinet 19H-080.

6 Attach the front frame assembly 19H-310 to the bracket 19H-385.

(b) Install and assemble the service cabinet assembly 19H-010 as follows:

WARNING: BE VERY CAREFUL WHEN YOU REMOVE OR INSTALL THE SPRING. BECAUSE THERE IS REMAINING TENSION IN THE SPRING, IT CAN CAUSE YOU INJURY.

1 Attach the spring loaded latches 19H-130 and the bushings 19H-120 with the nuts 19H-240 and the washers 19H-250 to the upper part service cabinet assembly 19H-020 and to the lower part service cabinet 19H-080.

2 Attach the screws 19H-140 and the washers 19H-150 to the center part service cabinet 19H-070.

3 Attach the angle brackets 19H-190 with the screws 19H-200 and the washers 19H-210.

4 Attach the lower part service cabinet 19H-080 with the screws 19H-220 and the washers 19H-210.

5 Attach the lower part service cabinet 19H-080 with the screws 19H-230 to the angle brackets 19H-190.

6 Attach the hinge 19H-090 with the screws 19H-220 and the washers 19H-210 to the lavatory structure.

7 Attach the center part service cabinet 19H-070 with the hinge pin 19H-100 to the hinge 19H-090.

8 Attach the upper part service cabinet assembly 19H-020 with the screws 19H-220 and the washers 19H-210.

9 Attach the angle assemblies 19H-160 with the screws 19H-260, the washers 19H-270 and the nuts 19H-280 to the center part service cabinet 19H-070.

10 Attach the block 19H-030 with the screws 19H-040, the washers 19H-060 and the nuts 19H-050 to the upper part service cabinet assembly 19H-020.

SUB TASK 25-41-51-400-126-B01
D2549020411200 D2549030409600 D2549030410200 D2549030414000 D2549030702000 D2549030704800 R225401671-000 R225401671-002 R225401675-000

2. Assembly and Installation of the Service Cabinet (19H-1)

(a) Attach the label 19H-460 and the protective film 19H-470.

(b) Install and assemble the passenger service unit PSU 19H-300 as follows:

1 Attach the call switch wire-harness 19H-380 to the bracket 19H-385.

2 Attach the sign housing 19H-350 to the bracket 19H-385.

3 Attach the shaver outlet 19H-360 with the set screw 19H-370 to the bracket 19H-385.

4 Connect the passenger service unit PSU 19H-300 to the electrical supply.

5 Attach the passenger service unit PSU 19H-300 with the set screw 19H-340 to the lower part service cabinet 19H-080.

6 Attach the front frame assembly 19H-310 to the bracket 19H-385.

(c) Install and assemble the service cabinet assembly 19H-010 as follows:

WARNING: BE VERY CAREFUL WHEN YOU REMOVE OR INSTALL THE SPRING. BECAUSE THERE IS REMAINING TENSION IN THE SPRING, IT CAN CAUSE YOU INJURY.

1 Attach the spring loaded latches 19H-130 and the bushings 19H-120 with the nuts 19H-240 and the washers 19H-250 to the upper part service cabinet assembly 19H-020 and to the lower part service cabinet 19H-080.

2 Attach the screws 19H-140 and the washers 19H-150 to the center part service cabinet 19H-070.

3 Attach the angle brackets 19H-190 with the screws 19H-200 and the washers 19H-210.

4 Attach the lower part service cabinet 19H-080 with the screws 19H-220 and the washers 19H-210.

5 Attach the lower part service cabinet 19H-080 with the screws 19H-230 to the angle brackets 19H-190.

6 Attach the hinge 19H-090 with the screws 19H-220 and the washers 19H-210 to the lavatory structure.

7 Attach the center part service cabinet 19H-070 with the hinge pin 19H-100 to the hinge 19H-090.

8 Attach the upper part service cabinet assembly 19H-020 with the screws 19H-220 and the washers 19H-210.

9 Attach the angle assemblies 19H-160 with the screws 19H-260, the washers 19H-270 and the nuts 19H-280 to the center part service cabinet 19H-070.

10 Attach the block 19H-030 with the screws 19H-040, the washers 19H-060 and the nuts 19H-050 to the upper part service cabinet assembly 19H-020.

(d) Assemble the service box assembly 19H-390 as follows:

1 Attach the handle holders 19H-420 and the handle 19H-440 with the screws 19H-430.

2 Attach the drawer guides 19H-410 with the screws 19H-450.

3 Attach the drawer 19H-400 to the drawer guides 19H-410.

(e) Attach the service box assembly 19H-390 to the service cabinet assembly 19H-010.

SUB TASK 25-41-51-400-126-C01
D2549020400000 D2549020404000 D2549030700600 D2549030700800 D2549030704600

3. Assembly and Installation of the Service Cabinet (19H-1)

(a) Install and assemble the passenger service unit PSU 19H-300 as follows:

1 Attach the call switch wire-harness 19H-380 to the bracket 19H-385.

2 Attach the sign housing 19H-350 to the bracket 19H-385.

3 Attach the shaver outlet 19H-360 with the set screw 19H-370 to the bracket 19H-385.

4 Connect the passenger service unit PSU 19H-300 to the electrical supply.

5 Attach the passenger service unit PSU 19H-300 with the set screw 19H-340 to the lower part service cabinet 19H-080.

6 Attach the front frame assembly 19H-310 to the bracket 19H-385.

(b) Install and assemble the service cabinet assembly 19H-010 as follows:

WARNING: BE VERY CAREFUL WHEN YOU REMOVE OR INSTALL THE SPRING. BECAUSE THERE IS REMAINING TENSION IN THE SPRING, IT CAN CAUSE YOU INJURY.

1 Attach the spring loaded latches 19H-130 and the bushings 19H-120 with the nuts 19H-240 and the washers 19H-250 to the upper part service cabinet assembly 19H-020 and to the lower part service cabinet 19H-080.

2 Attach the screws 19H-140 and the washers 19H-150 to the center part service cabinet 19H-070.

3 Attach the angle brackets 19H-190 with the screws 19H-200 and the washers 19H-210.

4 Attach the lower part service cabinet 19H-080 with the screws 19H-220 and the washers 19H-210.

5 Attach the lower part service cabinet 19H-080 with the screws 19H-230 to the angle brackets 19H-190.

6 Attach the chutes 19H-295 to the lower part service cabinet 19H-080.

7 Attach the soap dispenser assemblies 19H-285 to the chutes 19H-295.

8 Attach the hinge 19H-090 with the screws 19H-220 and the washers 19H-210 to the lavatory structure.

9 Attach the center part service cabinet 19H-070 with the hinge pin 19H-100 to the hinge 19H-090.

10 Attach the upper part service cabinet assembly 19H-020 with the screws 19H-220 and the washers 19H-210.

11 Attach the angle assemblies 19H-160 with the screws 19H-260, the washers 19H-270 and the nuts 19H-280 to the center part service cabinet 19H-070.

12 Attach the block 19H-030 with the screws 19H-040, the washers 19H-060 and the nuts 19H-050 to the upper part service cabinet assembly 19H-020.

(c) Assemble the service box assembly 19H-390 as follows:

1 Attach the handle holders 19H-420 and the handle 19H-440 with the screws 19H-430.

2 Attach the drawer guides 19H-410 with the screws 19H-450.

3 Attach the drawer 19H-400 to the drawer guides 19H-410.

(d) Attach the service box assembly 19H-390 to the service cabinet assembly 19H-010.

TASK 25-41-51-400-807-K01
D2549010402400 D2549010403400 D2549010406400 D2549020407400

63. Assembly and Installation of the Service Cabinet

A. General

This task gives you the installation and assembly procedures of the component.

B. Procedure

WARNING: BE CAREFUL WHEN YOU USE SOLVENTS/CLEANING AGENTS, SEALANTS AND OTHER MATERIALS. OBEY THE MATERIAL MANUFACTURER'S INSTRUCTIONS AND THE LOCAL REGULATIONS. MAKE SURE THAT THERE IS A GOOD FLOW OF AIR THROUGH THE WORK AREA. DO NOT BREATHE THE FUMES. DO NOT SMOKE. DO NOT USE THESE MATERIALS NEAR A FLAME, SPARKS OR SOURCES OF HEAT. USE PROTECTIVE CLOTHING, GOGGLES AND GLOVES. IF YOU GET ONE OF THESE MATERIALS ON YOUR SKIN OR IN YOUR EYES, FLUSH IT AWAY WITH A FLOW OF CLEAN WATER. IF YOU GET ONE OF THESE MATERIALS IN YOUR MOUTH, GET IMMEDIATE MEDICAL AID. IN GENERAL, THESE MATERIALS ARE POISONOUS, FLAMMABLE AND SKIN IRRITANTS.

CAUTION: DO ALL THE WORK ON A CLEAN, SOFT SURFACE TO PREVENT DAMAGE TO THE COMPONENTS.

CAUTION: MAKE SURE THAT ALL THE PARTS ARE CLEAN BEFORE YOU ASSEMBLE THEM.

SUB TASK 25-41-51-400-127-A01
1. Assembly and Installation of the Service Cabinet (19J-1)

(a) Install and assemble the passenger service unit PSU 19J-420 as follows:

1 Attach the call switch wire-harness 19J-500 to the bracket 19J-510.

2 Attach the shaver outlet 19J-480 with the set screw 19J-490 to the bracket 19J-510.

3 Attach the sign housing 19J-470 to the bracket 19J-510.

4 Connect the passenger service unit PSU 19J-420 to the electrical supply.

5 Attach the passenger service unit PSU 19J-420 with the set screw 19J-460 to the lower part service cabinet 19J-080.

6 Attach the front frame assembly 19J-430 to the bracket 19J-510.

(b) Install and assemble the service cabinet assembly 19J-010 as follows:

WARNING: BE VERY CAREFUL WHEN YOU REMOVE OR INSTALL THE SPRING. BECAUSE THERE IS REMAINING TENSION IN THE SPRING, IT CAN CAUSE YOU INJURY.

1 Attach the spring loaded latches 19J-190 and the bushings 19J-180 with the nuts 19J-300 and the washers 19J-310 to the upper part service cabinet assembly 19J-020 and to the lower part service cabinet 19J-080.

2 Attach the screws 19J-200 and the washers 19J-210 to the center part service cabinet 19J-070.

3 Attach the angle brackets 19J-250 with the screws 19J-260 and the washers 19J-270.

4 Attach the lower part service cabinet 19J-080 with the screws 19J-280 and the washers 19J-270.
- a Attach the magnetic catch 19J-100 with the screws 19J-110 and the nuts 19J-120 to the service-cabinet flap 19J-090.
- b Attach the service-cabinet flap 19J-090 to the lower part service cabinet 19J-080.

5 Attach the lower part service cabinet 19J-080 with the screws 19J-290 to the angle brackets 19J-250.

6 Attach the hinge 19J-150 with the screws 19J-280 and the washers 19J-270 to the lavatory structure.

7 Attach the center part service cabinet 19J-070 with the hinge pin 19J-160 to the hinge 19J-150.

8 Attach the upper part service cabinet assembly 19J-020 with the screws 19J-280 and the washers 19J-270.

9 Attach the angle assemblies 19J-220 with the screws 19J-320, the washers 19J-330 and the nuts 19J-340 to the center part service cabinet 19J-070.

10 Attach the block 19J-030 with the screws 19J-040, the washers 19J-060 and the nuts 19J-050 to the upper part service cabinet assembly 19J-020.

(c) Assemble the service box assembly 19J-350 as follows:

1 Attach the handle holders 19J-380 and the handle 19J-400 with the screws 19J-390.

2 Attach the drawer guides 19J-370 with the screws 19J-410.

3 Attach the drawer 19J-360 to the drawer guides 19J-370.

(d) Attach the service box assembly 19J-350 to the service cabinet assembly 19J-010.

TASK 25-41-51-400-807-L01
D2549030610200 D2549030701200

64. Assembly and Installation of the Service Cabinet

A. General

This task gives you the installation and assembly procedures of the component.

B. Procedure

WARNING: BE CAREFUL WHEN YOU USE SOLVENTS/CLEANING AGENTS, SEALANTS AND OTHER MATERIALS. OBEY THE MATERIAL MANUFACTURER'S INSTRUCTIONS AND THE LOCAL REGULATIONS. MAKE SURE THAT THERE IS A GOOD FLOW OF AIR THROUGH THE WORK AREA. DO NOT BREATHE THE FUMES. DO NOT SMOKE. DO NOT USE THESE MATERIALS NEAR A FLAME, SPARKS OR SOURCES OF HEAT. USE PROTECTIVE CLOTHING, GOGGLES AND GLOVES. IF YOU GET ONE OF THESE MATERIALS ON YOUR SKIN OR IN YOUR EYES, FLUSH IT AWAY WITH A FLOW OF CLEAN WATER. IF YOU GET ONE OF THESE MATERIALS IN YOUR MOUTH, GET IMMEDIATE MEDICAL AID. IN GENERAL, THESE MATERIALS ARE POISONOUS, FLAMMABLE AND SKIN IRRITANTS.

CAUTION: DO ALL THE WORK ON A CLEAN, SOFT SURFACE TO PREVENT DAMAGE TO THE COMPONENTS.

CAUTION: MAKE SURE THAT ALL THE PARTS ARE CLEAN BEFORE YOU ASSEMBLE THEM.

SUB TASK 25-41-51-400-128-A01

1. Assembly and Installation of the Service Cabinet (19K-1)

(a) Install and assemble the passenger service unit PSU 19K-420 as follows:

1 Attach the call switch wire-harness 19K-500 to the bracket 19K-510.

2 Attach the shaver outlet 19K-480 with the set screw 19K-490 to the bracket 19K-510.

3 Attach the sign housing 19K-470 to the bracket 19K-510.

4 Connect the passenger service unit PSU 19K-420 to the electrical supply.

5 Attach the passenger service unit PSU 19K-420 with the set screw 19K-460 to the lower part service cabinet 19K-080.

6 Attach the front frame assembly 19K-430 to the bracket 19K-510.

(b) Install and assemble the service cabinet assembly 19K-010 as follows:

WARNING: BE VERY CAREFUL WHEN YOU REMOVE OR INSTALL THE SPRING. BECAUSE THERE IS REMAINING TENSION IN THE SPRING, IT CAN CAUSE YOU INJURY.

1 Attach the spring loaded latches 19K-190 and the bushings 19K-180 with the nuts 19K-340 and the washers 19K-320 to the upper part service cabinet assembly 19K-020 and to the lower part service cabinet 19K-080.

2 Attach the screws 19K-240 and the washers 19K-250 to the center part service cabinet 19K-070.

3 Attach the angle brackets 19K-230 with the screws 19K-260 and the washers 19K-300.

4 Attach the lower part service cabinet 19K-080 with the screws 19K-270 and the washers 19K-300.
   a Attach the magnetic catch 19K-130 with the screws 19K-090 and the nuts 19K-110 to the service-cabinet flap 19K-100.
   b Attach the service-cabinet flap 19K-100 to the lower part service cabinet 19K-080.

5 Attach the lower part service cabinet 19K-080 with the screws 19K-290 to the angle brackets 19K-230.

6 Attach the hinge 19K-150 with the screws 19K-270 and the washers 19K-300 to the lavatory structure.

7 Attach the center part service cabinet 19K-070 with the hinge pin 19K-160 to the hinge 19K-150.

8 Attach the upper part service cabinet assembly 19K-020 with the screws 19K-270 and the washers 19K-300.

9 Attach the angle assemblies 19K-200 with the screws 19K-280, the washers 19K-310 and the nuts 19K-330 to the center part service cabinet 19K-070.

10 Attach the block 19K-030 with the screws 19K-040, the washers 19K-050 and the nuts 19K-060 to the upper part service cabinet assembly 19K-020.

(c) Assemble the service box assembly 19K-350 as follows:

1 Attach the handle holders 19K-380 and the handle 19K-400 with the screws 19K-390.

2 Attach the drawer guides 19K-370 with the screws 19K-410.

3 Attach the drawer 19K-360 to the drawer guides 19K-370.

(d) Attach the service box assembly 19K-350 to the service cabinet assembly 19K-010.

TASK 25-41-51-400-808-A01

D2547160900200 D2547160900400 D2547161903000 D2549010400000 D2549010400200
D2549010400400 D2549010400600 D2549010400800 D2549010401000 D2549010401400
D2549010401600 D2549010401800 D2549010402000 D2549010402200 D2549010402400
D2549010402600 D2549010402800 D2549010403000 D2549010403200 D2549010403400
D2549010403600 D2549010403800 D2549010404000 D2549010404200 D2549010404400
D2549010404600 D2549010404800 D2549010405000 D2549010405200 D2549010405400
D2549010405600 D2549010405800 D2549010406000 D2549010406200 D2549010406400
D2549010406800 D2549010407000 D2549010500000 D2549010500400 D2549010500600
D2549010500800 D2549010501000 D2549010501200 D2549010501400 D2549010501600
D2549010501800 D2549010502000 D2549010502200 D2549010502400 D2549010502600
D2549010502800 D2549010503200 D2549010503400 D2549010503600 D2549010503800
D2549010504200 D2549010504400 D2549010504600 D2549010504800 D2549010505000
D2549010505200 D2549010505400 D2549010505600 D2549010505800 D2549010506000
D2549010506200 D2549010506400 D2549010506800 D2549010507000 D2549010507200
D2549010507400 D2549010507600 D2549010507800 D2549010508000 D2549010508200
D2549010508400 D2549010508600 D2549010508800 D2549010509000 D2549010509200
D2549010509400 D2549010509600 D2549010509800 D2549010510000 D2549010510200
D2549010510400 D2549010510600 D2549010510800 D2549010511000 D2549010511200
D2549010511400 D2549010511600 D2549010511800 D2549010512000 D2549010512200
D2549010512400 D2549010512600 D2549010513000 D2549010513200 D2549010513400
D2549010513600 D2549010513800 D2549010514000 D2549010514200 D2549010514400
D2549010514600 D2549010514800 D2549010600000 D2549010600200 D2549010600400
D2549010600600 D2549010600800 D2549010601000 D2549010601200 D2549010601400
D2549010601600 D2549010601800 D2549010602000 D2549010602200 D2549010602400
D2549010602600 D2549010602800 D2549010603000 D2549010603200 D2549010603400
D2549010603600 D2549010603800 D2549010604000 D2549010604200 D2549010604400
D2549010604600 D2549010604800 D2549010605000 D2549010605200 D2549010605600
D2549010605800 D2549010606000 D2549010606200 D2549010606400 D2549010606600
D2549010606800 D2549010607000 D2549010607200 D2549010607400 D2549010607600
D2549010607800 D2549010608200 D2549010608400 D2549010608600 D2549010608800
D2549010609000 D2549010609200 D2549010609400 D2549010609600 D2549010609800
D2549010610000 D2549010610200 D2549010610400 D2549010610600 D2549010610800
D2549010611000 D2549010611200 D2549010611400 D2549010611600 D2549010611800
D2549010612000 D2549010612200 D2549010612400 D2549010612600 D2549010613000
D2549010613200 D2549010613400 D2549010613600 D2549010613800 D2549010614200
D2549010614400 D2549010614600 D2549010614800 D2549020300000 D2549020300400
D2549020300600 D2549020300800 D2549020301000 D2549020301600 D2549020301800
D2549020302000 D2549020302800 D2549020400000 D2549020400200 D2549020400400
D2549020400600 D2549020400800 D2549020401000 D2549020401200 D2549020401400
D2549020401600 D2549020402000 D2549020402200 D2549020402400 D2549020402600
D2549020403000 D2549020403200 D2549020403400 D2549020403600 D2549020403800
D2549020404000 D2549020404200 D2549020404400 D2549020404600 D2549020404800
D2549020405000 D2549020405200 D2549020405400 D2549020405600 D2549020405800
D2549020406000 D2549020406200 D2549020406400 D2549020406600 D2549020406800
D2549020407000 D2549020407200 D2549020407400 D2549020407600 D2549020407800
D2549020408000 D2549020408200 D2549020408600 D2549020408800 D2549020409000

D2549020409200 D2549020409400 D2549020409600 D2549020409800 D2549020410200
D2549020410400 D2549020410600 D2549020410800 D2549020411000 D2549020411200
D2549020411400 D2549020411600 D2549020411800 D2549020412000 D2549020412200
D2549020412400 D2549020412600 D2549020412800 D2549020413000 D2549020413200
D2549020413400 D2549020413600 D2549020413800 D2549020414000 D2549020414200
D2549020414600 D2549020414800 D2549020500000 D2549020500200 D2549020500400
D2549020500600 D2549020500800 D2549020501000 D2549020501200 D2549020501400
D2549020501600 D2549020501800 D2549020502000 D2549020502200 D2549020502400
D2549020502600 D2549020502800 D2549020503000 D2549020503200 D2549020503400
D2549020503600 D2549020503800 D2549020504000 D2549020504200 D2549020504400
D2549020504600 D2549020504800 D2549020505000 D2549020505200 D2549020505400
D2549020505600 D2549020505800 D2549020506200 D2549020506400 D2549020506600
D2549020506800 D2549020507000 D2549020507200 D2549020507400 D2549020507600
D2549020507800 D2549020508000 D2549020508200 D2549020508400 D2549020508600
D2549020508800 D2549020509000 D2549020509200 D2549020509600 D2549020509800
D2549020510000 D2549020510400 D2549020510600 D2549020510800 D2549020511000
D2549020511200 D2549020511600 D2549020511800 D2549020512000 D2549020512200
D2549020512400 D2549020512600 D2549020512800 D2549020513000 D2549020513200
D2549020513400 D2549020513600 D2549020513800 D2549020514000 D2549020514200
D2549020514400 D2549020514600 D2549020514800 D2549020600000 D2549020600200
D2549020600400 D2549020600800 D2549020601000 D2549020601200 D2549020601400
D2549020601600 D2549020601800 D2549020602000 D2549020602200 D2549020602400
D2549020602600 D2549020602800 D2549020603000 D2549020603200 D2549020603400
D2549020603600 D2549020603800 D2549020604000 D2549020604200 D2549020604400
D2549020604600 D2549020604800 D2549020605000 D2549020605200 D2549020605400
D2549020605600 D2549020605800 D2549020606000 D2549020606400 D2549020606600
D2549020606800 D2549020607000 D2549020607200 D2549020607400 D2549020607600
D2549020607800 D2549020608200 D2549020608400 D2549020608600 D2549020608800
D2549020609000 D2549020609200 D2549020609400 D2549020609600 D2549020609800
D2549020610000 D2549020610200 D2549020610400 D2549020610600 D2549020610800
D2549020611000 D2549020611200 D2549020611400 D2549020611600 D2549020611800
D2549020612000 D2549020612200 D2549020612400 D2549020612600 D2549020612800
D2549020613000 D2549020613200 D2549020613600 D2549020613800 D2549020614000
D2549020614400 D2549020614600 D2549020614800 D2549020700000 D2549020700200
D2549020700400 D2549020700600 D2549020700800 D2549020701000 D2549020701200
D2549020701400 D2549020701600 D2549020701800 D2549020702000 D2549020702200
D2549020702400 D2549020702600 D2549020702800 D2549020703200 D2549020703400
D2549020703600 D2549020703800 D2549020704000 D2549020704200 D2549020704400
D2549020704600 D2549020704800 D2549020705000 D2549020705200 D2549020705400
D2549020705600 D2549020705800 D2549020706000 D2549020706200 D2549020706400
D2549020706600 D2549020706800 D2549020707000 D2549020707200 D2549020707400
D2549020707600 D2549020707800 D2549020708000 D2549020708200 D2549020708400
D2549020708600 D2549020708800 D2549020709000 D2549020709200 D2549020709400
D2549020709600 D2549020709800 D2549020710000 D2549020710200 D2549020710400
D2549020710600 D2549020710800 D2549020711000 D2549020711200 D2549020711400
D2549020711600 D2549020712000 D2549020712200 D2549020712400 D2549020712600
D2549020712800 D2549020713000 D2549020713200 D2549020713400 D2549020713600

D2549020713800 D2549020714000 D2549020714400 D2549020714600 D2549020800000
D2549020800200 D2549020800400 D2549020800600 D2549020800800 D2549020801000
D2549020801200 D2549020801400 D2549020801600 D2549020801800 D2549020802000
D2549020802200 D2549020802400 D2549020802600 D2549020802800 D2549020803000
D2549020803200 D2549020803400 D2549020803600 D2549020803800 D2549020804000
D2549020804200 D2549020804400 D2549020804800 D2549020805000 D2549020805200
D2549020805400 D2549020805600 D2549020805800 D2549020806000 D2549020806200
D2549020806400 D2549020806600 D2549020806800 D2549020807000 D2549020807200
D2549020807400 D2549020807600 D2549020807800 D2549020808200 D2549020808400
D2549020808600 D2549020808800 D2549020809000 D2549020809400 D2549020809600
D2549020809800 D2549020810000 D2549020810200 D2549020810400 D2549020810600
D2549020810800 D2549020811200 D2549020811400 D2549020811600 D2549020811800
D2549020812000 D2549020812200 D2549020812400 D2549020812600 D2549020812800
D2549020813000 D2549020813200 D2549020813400 D2549020813600 D2549020813800
D2549020814000 D2549020814200 D2549020814400 D2549020814600 D2549020814800
D2549030400000 D2549030400200 D2549030400400 D2549030400600 D2549030401000
D2549030401200 D2549030401400 D2549030401600 D2549030401800 D2549030402000
D2549030402200 D2549030402400 D2549030402600 D2549030402800 D2549030403000
D2549030403400 D2549030403600 D2549030403800 D2549030404000 D2549030404200
D2549030404400 D2549030404600 D2549030404800 D2549030405000 D2549030405200
D2549030405400 D2549030405600 D2549030405800 D2549030406000 D2549030406400
D2549030406600 D2549030406800 D2549030407000 D2549030407200 D2549030407400
D2549030407600 D2549030407800 D2549030408000 D2549030408200 D2549030408400
D2549030408600 D2549030409000 D2549030409200 D2549030409400 D2549030409600
D2549030409800 D2549030410000 D2549030410200 D2549030410400 D2549030410600
D2549030410800 D2549030411200 D2549030411400 D2549030411600 D2549030411800
D2549030412000 D2549030412200 D2549030412400 D2549030412600 D2549030412800
D2549030413000 D2549030413200 D2549030413400 D2549030413600 D2549030414000
D2549030414200 D2549030414400 D2549030414600 D2549030414800 D2549030500200
D2549030500400 D2549030500600 D2549030500800 D2549030501000 D2549030501200
D2549030501400 D2549030501600 D2549030501800 D2549030502000 D2549030502200
D2549030502400 D2549030502600 D2549030502800 D2549030503000 D2549030503200
D2549030503400 D2549030503600 D2549030503800 D2549030504000 D2549030504200
D2549030504600 D2549030504800 D2549030505200 D2549030505400 D2549030505600
D2549030505800 D2549030506000 D2549030506200 D2549030506400 D2549030506600
D2549030506800 D2549030507000 D2549030507200 D2549030507400 D2549030507600
D2549030507800 D2549030508000 D2549030508200 D2549030508400 D2549030508600
D2549030508800 D2549030509000 D2549030509200 D2549030509400 D2549030509600
D2549030509800 D2549030510000 D2549030510200 D2549030510400 D2549030510600
D2549030510800 D2549030511000 D2549030511200 D2549030511400 D2549030511600
D2549030511800 D2549030512000 D2549030512200 D2549030512400 D2549030512800
D2549030513000 D2549030513200 D2549030513400 D2549030513600 D2549030513800
D2549030514000 D2549030514200 D2549030514400 D2549030514600 D2549030514800
D2549030600000 D2549030600200 D2549030600400 D2549030600600 D2549030600800
D2549030601000 D2549030601200 D2549030601400 D2549030601600 D2549030601800
D2549030602000 D2549030602200 D2549030602400 D2549030602600 D2549030602800
D2549030603000 D2549030603200 D2549030603400 D2549030603600 D2549030603800

D2549030604200 D2549030604400 D2549030604600 D2549030604800 D2549030605000
D2549030605200 D2549030605400 D2549030605600 D2549030605800 D2549030606000
D2549030606200 D2549030606400 D2549030606600 D2549030606800 D2549030607000
D2549030607200 D2549030607400 D2549030607600 D2549030607800 D2549030608000
D2549030608200 D2549030608400 D2549030608600 D2549030608800 D2549030609000
D2549030609200 D2549030609800 D2549030610000 D2549030610200 D2549030610400
D2549030610600 D2549030611000 D2549030611200 D2549030611400 D2549030611600
D2549030611800 D2549030612000 D2549030612200 D2549030612400 D2549030612600
D2549030612800 D2549030613200 D2549030613400 D2549030613600 D2549030613800
D2549030614000 D2549030614200 D2549030614400 D2549030614600 D2549030614800
D2549030700000 D2549030700200 D2549030700400 D2549030700600 D2549030700800
D2549030701000 D2549030701200 D2549030701400 D2549030701600 D2549030701800
D2549030702000 D2549030702200 D2549030702400 D2549030702600 D2549030702800
D2549030703000 D2549030703200 D2549030703400 D2549030703600 D2549030703800
D2549030704000 D2549030704200 D2549030704400 D2549030704600 D2549030704800
D2549030705200 D2549030705600 D2549040500200 D2549040500400 D2549040500600
D2549040500800 D2549040501000 D2549040501200 D2549040501400 D2549040501600
D2549040501800 D2549040502000 R225401107-000 R225401107-002 R225401107-004
R225401115-000 R225401115-002 R225401128-000 R225401133-000 R225401134-000
R225401134-002 R225401134-004 R225401134-006 R225401134-008 R225401134-010
R225401134-012 R225401134-014 R225401134-016 R225401134-018 R225401134-020
R225401134-022 R225401134-024 R225401134-026 R225401134-028 R225401134-030
R225401134-032 R225401134-034 R225401134-036 R225401134-038 R225401136-000
R225401136-004 R225401136-006 R225401136-008 R225401136-010 R225401136-012
R225401136-014 R225401136-016 R225401136-018 R225401136-020 R225401136-022
R225401136-024 R225401137-000 R225401137-002 R225401137-004 R225401137-006
R225401137-008 R225401137-010 R225401137-012 R225401137-014 R225401137-016
R225401139-000 R225401142-000 R225401142-002 R225401145-000 R225401145-002
R225401145-004 R225401145-006 R225401145-008 R225401145-010 R225401145-012
R225401145-014 R225401146-000 R225401146-002 R225401152-000 R225401152-002
R225401152-004 R225401152-006 R225401152-008 R225401152-010 R225401153-000
R225401159-000 R225401160-000 R225401160-002 R225401168-000 R225401168-002
R225401168-004 R225401168-006 R225401168-008 R225401168-010 R225401168-012
R225401168-014 R225401168-016 R225401168-018 R225401168-020 R225401168-022
R225401168-024 R225401168-026 R225401168-028 R225401172-000 R225401172-002
R225401172-004 R225401172-006 R225401172-008 R225401172-010 R225401172-012
R225401172-014 R225401172-016 R225401172-018 R225401175-000 R225401175-002
R225401176-000 R225401183-000 R225401183-002 R225401183-004 R225401183-006
R225401183-008 R225401188-000 R225401188-002 R225401188-004 R225401188-006
R225401192-000 R225401192-002 R225401195-000 R225401196-000 R225401196-002
R225401196-004 R225401196-006 R225401196-008 R225401196-010 R225401196-012
R225401196-014 R225401196-016 R225401196-018 R225401196-020 R225401196-022
R225401196-024 R225401196-034 R225401196-036 R225401196-038 R225401196-040
R225401196-042 R225401196-044 R225401196-046 R225401196-048 R225401196-050
R225401196-052 R225401196-054 R225401196-056 R225401196-058 R225401196-060
R225401196-062 R225401196-064 R225401196-066 R225401196-068 R225401196-070
R225401199-000 R225401199-002 R225401199-004 R225401199-006 R225401199-008

R225401199-010 R225401199-012 R225401600-000 R225401600-002 R225401600-004
R225401602-000 R225401603-000 R225401605-000 R225401605-002 R225401609-000
R225401611-000 R225401611-006 R225401611-008 R225401611-010 R225401611-012
R225401611-014 R225401611-016 R225401611-018 R225401611-020 R225401613-000
R225401614-000 R225401618-000 R225401618-002 R225401619-000 R225401619-002
R225401622-000 R225401622-002 R225401624-000 R225401625-000 R225401627-000
R225401627-002 R225401627-004 R225401629-000 R225401629-002 R225401639-000
R225401639-002 R225401643-000 R225401643-002 R225401643-004 R225401643-006
R225401643-008 R225401646-000 R225401646-002 R225401647-000 R225401648-000
R225401648-002 R225401648-004 R225401648-006 R225401648-008 R225401649-000
R225401656-000 R225401656-002 R225401658-000 R225401662-000 R225401662-002
R225401671-000 R225401671-002 R225401673-000 R225401673-002 R225401673-002
R225401673-002 R225401673-004 R225401673-006 R225401675-000 R225401676-000
R225401683-000 R225401685-000 R225401685-002 R225401688-000 R225401689-004
R225401689-006 R225401691-000 R225401691-002 R225401693-000 R225401697-000
R225401697-002 R225401803-000 R225401803-002 R225401808-000 R225401811-000
R225401814-000

65. Assembly and Installation of the Waste Bin, the Waste Chute and the Fire Extinguisher

A. General

This task gives you the installation and assembly procedures of the component.

B. Job Set-up Information

(1) Not applicable

C. Procedure

WARNING: BE CAREFUL WHEN YOU USE SOLVENTS/CLEANING AGENTS, SEALANTS AND OTHER MATERIALS. OBEY THE MATERIAL MANUFACTURER'S INSTRUCTIONS AND THE LOCAL REGULATIONS. MAKE SURE THAT THERE IS A GOOD FLOW OF AIR THROUGH THE WORK AREA. DO NOT BREATHE THE FUMES. DO NOT SMOKE. DO NOT USE THESE MATERIALS NEAR A FLAME, SPARKS OR SOURCES OF HEAT. USE PROTECTIVE CLOTHING, GOGGLES AND GLOVES. IF YOU GET ONE OF THESE MATERIALS ON YOUR SKIN OR IN YOUR EYES, FLUSH IT AWAY WITH A FLOW OF CLEAN WATER. IF YOU GET ONE OF THESE MATERIALS IN YOUR MOUTH, GET IMMEDIATE MEDICAL AID. IN GENERAL, THESE MATERIALS ARE POISONOUS, FLAMMABLE AND SKIN IRRITANTS.

CAUTION: DO ALL THE WORK ON A CLEAN, SOFT SURFACE TO PREVENT DAMAGE TO THE COMPONENTS.

CAUTION: MAKE SURE THAT ALL THE PARTS ARE CLEAN BEFORE YOU ASSEMBLE THEM.

CAUTION: **MAKE SURE THAT YOU DO NOT BEND THE DISCHARGE TUBE WHEN YOU REMOVE OR INSTALL THE FIRE EXTINGUISHER. IF YOU DO, YOU CAN CAUSE DAMAGE TO THE JOINT BETWEEN THE DISCHARGE TUBE AND THE CONTAINER.**

SUB TASK 25-41-51-440-065-A01

D2549010500000 D2549010500400 D2549010500600 D2549010500800 D2549010501000 D2549010501200 D2549010501400 D2549010501800 D2549010502000 D2549010502200 D2549010502600 D2549010503200 D2549010503600 D2549010503800 D2549010504200 D2549010504400 D2549010504600 D2549010504800 D2549010505000 D2549010505200 D2549010505400 D2549010505800 D2549010506000 D2549010506400 D2549010507200 D2549010507400 D2549010507600 D2549010508000 D2549010508200 D2549010508400 D2549010508600 D2549010508800 D2549010509200 D2549010511200 D2549020500400 D2549020500800 D2549020501200 D2549020501600 D2549020501800 D2549020502000 D2549020502400 D2549020502600 D2549020503000 D2549020503400 D2549020503600 D2549020503800 D2549020504000 D2549020504200 D2549020504400 D2549020504600 D2549020505000 D2549020505400 D2549020505800 D2549020600000 D2549020600200 D2549020600800 D2549020601000 D2549020601200 D2549020601800 D2549020602400 D2549020602600 D2549020602800 D2549020603200 D2549020603400 D2549020603800 D2549020606400 D2549020606600 D2549020607200 D2549030500200 D2549030500400 D2549030500600 D2549030500800 D2549030501000 D2549030501200 D2549030501400 D2549030501600 D2549030501800 D2549030502000 D2549030502200 D2549030502400 D2549030502600 D2549030502800 D2549030503000 D2549030503200 D2549030503400 D2549030503600 R225401107-000 R225401107-002 R225401115-002 R225401134-000 R225401139-000 R225401145-000 R225401146-000 R225401146-002 R225401188-000 R225401188-002 R225401188-004 R225401188-006

1. Assembly and Installation of the Waste Bin, the Waste Chute and the Fire Extinguisher (18-1)

   (a) Assemble the door ejector assembly 18-190 as follows:

      1 Attach the bumper 18-210 and the shim 18-220 to the door ejector 18-200.

   (b) Attach the door ejector assembly 18-190 with the screws 18-230, the washers 18-240 and the nuts 18-250 to the waste-box console assembly 18-060.

   (c) Assemble the waste-box console assembly 18-060 as follows:

      1 Attach the cover 18-100 with the screws 18-110, the washers 18-120 and the nuts 18-130.

(d) Attach the waste-box console assembly 18-060 with the screws 18-150 and the washers 18-160 to the lavatory structure.

(e) Install and assemble the waste chute 18-010 as follows:

1 Attach the waste chute 18-010 and the caps 18-030 with the screws 18-040 and the nuts 18-020 to the waste-box console assembly 18-060.

(f) Attach the fire extinguisher 18-170 with the screws 18-040, the washers 18-160, 18-175 and the nuts 18-180.

NOTE: For further instructions, see CMMV 26-25-12_U3061 (fire extinguisher).

NOTE: For further instructions, see CMMV 26-25-36_U3061 (fire extinguisher).

(g) Attach the waste container 18-050 to the waste-box console assembly 18-060.

SUB TASK 25-41-51-440-065-B01
D2549010501600 D2549010502800 D2549010503400 D2549010506200 D2549010507000

2. Assembly and Installation of the Waste Bin, the Waste Chute and the Fire Extinguisher (18-1)

(a) Assemble the door ejector assembly 18-190 as follows:

1 Attach the bumper 18-210 and the shim 18-220 to the door ejector 18-200.

(b) Attach the door ejector assembly 18-190 with the screws 18-230, the washers 18-240 and the nuts 18-250 to the waste-box console assembly 18-060.

(c) Assemble the waste-box console assembly 18-060 as follows:

1 Attach the cover 18-100 with the screws 18-110, the washers 18-120 and the nuts 18-130.

(d) Attach the waste-box console assembly 18-060 with the screws 18-150 and the washers 18-160 to the lavatory structure.

(e) Install and assemble the waste chute 18-010 as follows:

1 Attach the waste chute 18-010 and the caps 18-030 with the screws 18-040 and the nuts 18-020 to the waste-box console assembly 18-060.

(f) Attach the fire extinguisher 18-170 with the screws 18-040, the washers 18-160, 18-175 and the nuts 18-180.

NOTE: For further instructions, see CMMV 26-25-04_61423 (fire extinguisher).

(g) Attach the waste container 18-050 to the waste-box console assembly 18-060.

SUB TASK 25-41-51-440-065-C01
D2547161903000 D2549020603600 D2549020604000

3. Assembly and Installation of the Waste Bin, the Waste Chute and the Fire Extinguisher (18-1)

(a) Assemble the door ejector assembly 18-190 as follows:

1 Attach the bumper 18-210 and the shim 18-220 to the door ejector 18-200.

(b) Attach the door ejector assembly 18-190 with the screws 18-230, the washers 18-240 and the nuts 18-250 to the waste-box console assembly 18-060.

(c) Assemble the waste-box console assembly 18-060 as follows:

1 Attach the cover 18-100 with the screws 18-110, the washers 18-120 and the nuts 18-130.

(d) Attach the waste-box console assembly 18-060 with the screw 18-320, the washer 18-330 and the nut 18-340 to the lavatory structure.

(e) Attach the waste-box console assembly 18-060 with the screws 18-150 and the washers 18-160 to the lavatory structure.

(f) Install and assemble the waste chute 18-010 as follows:

1 Attach the waste chute 18-010 with the screws 18-040 to the waste-box console assembly 18-060.

(g) Attach the fire extinguisher 18-170 with the screws 18-040, the washers 18-160, 18-175 and the nuts 18-180.

NOTE: For further instructions, see CMMV 26-25-12_U3061 (fire extinguisher).

NOTE: For further instructions, see CMMV 26-25-36_U3061 (fire extinguisher).

(h) Attach the waste container 18-050 to the waste-box console assembly 18-060.

SUB TASK 25-41-51-440-065-D01

D2549010509000 D2549010509600 D2549010509800 D2549010510000
D2549010510200 D2549010510400 D2549010510600 D2549010510800
D2549010511000 D2549010511400 D2549010511600 D2549010511800
D2549010512000 D2549010512400 D2549010512600 D2549010513000
D2549010513200 D2549010513400 D2549010513600 D2549010513800
D2549010514000 D2549010514200 D2549010514400 D2549010514600
D2549010514800 D2549010600000 D2549010600200 D2549010600400
D2549010600600 D2549010601000 D2549010601200 D2549010601400
D2549010601600 D2549010601800 D2549010602000 D2549010602200
D2549010602400 D2549010602600 D2549010602800 D2549010603000
D2549010603200 D2549010603400 D2549010603600 D2549010603800
D2549010604000 D2549010604200 D2549010604400 D2549010604600
D2549010604800 D2549010605000 D2549010605200 D2549010605600
D2549010605800 D2549010606000 D2549010606200 D2549010606400
D2549010606600 D2549010606800 D2549010607000 D2549010607200
D2549010607400 D2549010607600 D2549010607800 D2549010608200
D2549010608400 D2549010608600 D2549010608800 D2549010609000
D2549010609200 D2549010609400 D2549010609600 D2549010609800
D2549010610000 D2549010610200 D2549010610400 D2549010612000
D2549010612200 D2549010614800 D2549020502200 D2549020505600
D2549020506600 D2549020506800 D2549020507400 D2549020507600
D2549020507800 D2549020508000 D2549020508200 D2549020508400
D2549020508600 D2549020508800 D2549020509000 D2549020509200
D2549020509600 D2549020509800 D2549020510000 D2549020510400
D2549020510600 D2549020510800 D2549020511000 D2549020511200
D2549020511600 D2549020511800 D2549020512000 D2549020512200
D2549020512400 D2549020512600 D2549020512800 D2549020513000
D2549020513200 D2549020513400 D2549020513600 D2549020514000
D2549020514200 D2549020514400 D2549020514600 D2549020514800
D2549020602200 D2549020604200 D2549020604400 D2549020604600
D2549020604800 D2549020605000 D2549020605200 D2549020605400
D2549020605600 D2549020605800 D2549020606000 D2549020606800
D2549020607000 D2549020607400 D2549020607600 D2549020607800
D2549020608200 D2549020608400 D2549020608600 D2549020608800
D2549020609000 D2549020609200 D2549020609400 D2549020609600
D2549020609800 D2549020610000 D2549020610400 D2549020610600
D2549020610800 D2549020611000 D2549020611200 D2549020611400
D2549020611600 D2549020611800 D2549020612000 D2549020612400
D2549020612600 D2549020612800 D2549020613000 D2549020613200
D2549020613600 D2549020613800 D2549020614000 D2549020614400
D2549020614600 D2549020614800 D2549020700200 D2549020700400
D2549020700600 D2549020700800 D2549020701200 D2549020701400
D2549020701600 D2549020701800 D2549020702000 D2549020702200
D2549020702400 D2549020702600 D2549020702800 D2549020703200

D2549020703400 D2549020703600 D2549020703800 D2549020704000
D2549020704200 D2549020704400 D2549020704600 D2549020704800
D2549020705000 D2549020705200 D2549020705600 D2549020705800
D2549020706000 D2549020706200 D2549020706400 D2549020706600
D2549020706800 D2549020707000 D2549020707200 D2549020707600
D2549020707800 D2549020708200 D2549020708400 D2549020708600
D2549020708800 D2549020709000 D2549020709200 D2549020709400
D2549020709600 D2549020709800 D2549020710000 D2549020710200
D2549020710400 D2549020710600 D2549020710800 D2549020711000
D2549020711200 D2549020711400 D2549020711600 D2549020712000
D2549020712200 D2549020712400 D2549020712600 D2549020712800
D2549020713000 D2549020713200 D2549020713400 D2549020713600
D2549020713800 D2549020714000 D2549020714400 D2549020714600
D2549020800000 D2549020800200 D2549020800400 D2549020800600
D2549020800800 D2549020801000 D2549020801200 D2549020801400
D2549020801600 D2549020802000 D2549020802200 D2549020802400
D2549020802600 D2549020802800 D2549020803000 D2549020803200
D2549020803400 D2549020803600 D2549020803800 D2549020804000
D2549020807600 D2549020808400 D2549020808600 D2549020808800
D2549020809000 D2549020809400 D2549020810200 D2549030400000
D2549030400200 D2549030400400 D2549030402600 D2549030402800
D2549030403000 D2549030403400 D2549030403800 D2549030405200
D2549030405400 D2549030503800 D2549030504000 D2549030504200
D2549030504600 D2549030504800 D2549030505200 D2549030505600
D2549030505800 D2549030506000 D2549030506200 D2549030506400
D2549030506800 D2549030507000 D2549030507200 D2549030507400
D2549030507600 D2549030507800 D2549030508000 D2549030508200
D2549030508400 D2549030508600 D2549030508800 D2549030509000
D2549030509200 D2549030509600 D2549030509800 D2549030510000
D2549030510200 D2549030510400 D2549030510600 D2549030510800
D2549030511000 D2549030511200 D2549030511400 D2549030511600
D2549030511800 D2549030512000 D2549030512200 D2549030512400
D2549030512800 D2549030513000 D2549030513200 D2549030513400
D2549030513600 D2549030514000 D2549030514200 D2549030514400
D2549030514600 D2549030514800 D2549030600000 D2549030600200
D2549030600400 D2549030600600 D2549030600800 D2549030601000
D2549030601200 D2549030601400 D2549030601600 D2549030602000
D2549030602200 D2549030602400 D2549030602600 D2549030602800
D2549030603000 D2549030603200 D2549030603400 D2549030603600
D2549030604200 D2549030604400 D2549030604600 D2549030604800
D2549030605000 D2549030605200 D2549030605400 D2549030605600
D2549030605800 D2549030606000 D2549030606200 D2549030606400
D2549030606600 D2549030606800 D2549030607000 D2549030607200
D2549030607600 D2549030607800 D2549030608000 D2549030608200
D2549030608400 D2549030608600 D2549030609000 D2549030609200
D2549030609800 D2549030610000 D2549030610200 D2549030610400
D2549030610600 D2549030611000 D2549030611400 D2549030611600

D2549030611800 D2549030612000 D2549030612200 D2549030612400 D2549030612600 D2549030612800 D2549030613400 D2549030613600 D2549030613800 D2549030614200 D2549030614400 D2549030614600 D2549030614800 D2549030700800 D2549030704600 R225401107-004 R225401115-000 R225401134-002 R225401134-004 R225401134-006 R225401134-008 R225401134-010 R225401134-012 R225401134-016 R225401134-018 R225401134-020 R225401134-022 R225401134-024 R225401134-026 R225401134-028 R225401134-030 R225401134-032 R225401136-000 R225401136-010 R225401136-016 R225401136-020 R225401136-022 R225401137-000 R225401137-002 R225401137-004 R225401137-006 R225401137-008 R225401137-010 R225401137-012 R225401137-014 R225401137-016 R225401142-000 R225401142-002 R225401145-002 R225401145-004 R225401145-006 R225401145-008 R225401145-012 R225401145-014 R225401152-000 R225401152-002 R225401152-004 R225401152-006 R225401153-000 R225401159-000 R225401160-000 R225401160-002 R225401168-000 R225401168-002 R225401168-004 R225401168-006 R225401168-008 R225401168-010 R225401168-014 R225401168-016 R225401168-018 R225401168-020 R225401168-022 R225401168-024 R225401168-028 R225401172-000 R225401172-002 R225401172-004 R225401172-006 R225401172-008 R225401172-010 R225401172-012 R225401172-014 R225401172-016 R225401172-018 R225401175-000 R225401175-002 R225401176-000 R225401183-000 R225401183-002 R225401183-008 R225401192-000 R225401192-002 R225401195-000 R225401196-000 R225401196-002 R225401196-004 R225401196-006 R225401196-008 R225401196-034 R225401196-036 R225401196-038 R225401196-044 R225401196-046 R225401196-048 R225401196-050 R225401196-052 R225401196-054 R225401199-002 R225401199-004 R225401199-006 R225401199-008 R225401600-000 R225401600-002 R225401600-004 R225401603-000 R225401605-000 R225401605-002 R225401611-008 R225401611-010 R225401613-000 R225401614-000 R225401618-000 R225401618-002 R225401619-000 R225401619-002 R225401622-000 R225401625-000 R225401629-000 R225401629-002 R225401693-000

4. Assembly and Installation of the Waste Bin, the Waste Chute and the Fire Extinguisher (18-1)

   (a) Assemble the door ejector assembly 18-270 as follows:

   WARNING: BE VERY CAREFUL WHEN YOU REMOVE OR INSTALL THE SPRING. BECAUSE THERE IS REMAINING TENSION IN THE SPRING, IT CAN CAUSE YOU INJURY.

   1 Attach the spring 18-310, the door ejector pin 18-290 and the hinge pin 18-300 to the door ejector housing 18-280.

   (b) Attach the door ejector assembly 18-270 with the screws 18-230, the washers 18-240 and the nuts 18-250 to the waste-box console assembly 18-060.

   (c) Assemble the waste-box console assembly 18-060 as follows:

1 Attach the cover 18-100 with the screws 18-110, the washers 18-120 and the nuts 18-130.

(d) Attach the waste-box console assembly 18-060 with the screws 18-150 and the washers 18-160 to the lavatory structure.

(e) Install and assemble the waste chute 18-010 as follows:

1 Attach the waste chute 18-010 with the screws 18-040 to the waste-box console assembly 18-060.

(f) Attach the fire extinguisher 18-170 with the screws 18-040, the washers 18-160, 18-175 and the nuts 18-180.

NOTE: For further instructions, see CMMV 26-25-12_U3061 (fire extinguisher).

NOTE: For further instructions, see CMMV 26-25-36_U3061 (fire extinguisher).

(g) Attach the waste container 18-050 to the waste-box console assembly 18-060.

SUB TASK 25-41-51-440-065-E01
D2549020506200 D2549020506400 D2549020507000 D2549020507200 D2549020701000 D2549030402400 D2549030403600 D2549030404400 D2549030505400 D2549030506600 D2549030509400 D2549030513800 D2549030601800 D2549030603800 D2549030607400 D2549030608800 D2549030611200 D2549030613200

5. Assembly and Installation of the Waste Bin, the Waste Chute and the Fire Extinguisher (18-1)

(a) Assemble the waste-box console assembly 18-060 as follows:

1 Attach the cover 18-100 with the screws 18-110, the washers 18-120 and the nuts 18-130.

(b) Attach the waste-box console assembly 18-060 with the screws 18-150 and the washers 18-160 to the lavatory structure.

(c) Install and assemble the waste chute 18-010 as follows:

1 Attach the waste chute 18-010 with the screws 18-040 to the waste-box console assembly 18-060.

(d) Attach the fire extinguisher 18-170 with the screws 18-040, the washers 18-160, 18-175 and the nuts 18-180.

NOTE: For further instructions, see CMMV 26-25-12_U3061 (fire extinguisher).

NOTE: For further instructions, see CMMV 26-25-36_U3061 (fire extinguisher).

(e) Attach the waste container 18-050 to the waste-box console assembly 18-060.

SUB TASK 25-41-51-440-065-F01
D2549010509400 D2549010512200 D2549010600800 D2549020610200 D2549020612200 D2549020700000 D2549020705400 D2549020707400 D2549020708000

6. Assembly and Installation of the Waste Bin, the Waste Chute and the Fire Extinguisher (18-1)

(a) Assemble the door ejector assembly 18-270 as follows:

WARNING: BE VERY CAREFUL WHEN YOU REMOVE OR INSTALL THE SPRING. BECAUSE THERE IS REMAINING TENSION IN THE SPRING, IT CAN CAUSE YOU INJURY.

1 Attach the spring 18-310, the door ejector pin 18-290 and the hinge pin 18-300 to the door ejector housing 18-280.

(b) Attach the door ejector assembly 18-270 with the screws 18-230, the washers 18-240 and the nuts 18-250 to the waste-box console assembly 18-060.

(c) Assemble the waste-box console assembly 18-060 as follows:

1 Attach the cover 18-100 with the screws 18-110, the washers 18-120 and the nuts 18-130.

(d) Attach the waste-box console assembly 18-060 with the screws 18-150 and the washers 18-160 to the lavatory structure.

(e) Install and assemble the waste chute 18-010 as follows:

1 Attach the waste chute 18-010 with the screws 18-040 to the waste-box console assembly 18-060.

(f) Attach the fire extinguisher 18-170 with the screws 18-040, the washers 18-160, 18-175 and the nuts 18-180.

NOTE: For further instructions, see CMMV 26-25-04_61423 (fire extinguisher).

(g) Attach the waste container 18-050 to the waste-box console assembly 18-060.

SUB TASK 25-41-51-440-065-G01
D2549010502400 D2549010505600 D2549010506800 D2549010507800 D2549020600400 D2549020601400 D2549020601600 D2549020602000 D2549020603000 R225401128-000 R225401133-000

7. Assembly and Installation of the Waste Bin, the Waste Chute and the Fire Extinguisher (18-1)

(a) Assemble the door ejector assembly 18-190 as follows:

1 Attach the bumper 18-210 and the shim 18-220 to the door ejector 18-200.

(b) Attach the door ejector assembly 18-190 with the screws 18-230, the washers 18-240 and the nuts 18-250 to the waste-box console assembly 18-060.

(c) Assemble the waste-box console assembly 18-060 as follows:

1 Attach the cover 18-100 with the screws 18-110, the washers 18-120 and the nuts 18-130.

(d) Attach the waste-box console assembly 18-060 with the screw 18-320, the washer 18-330 and the nut 18-340 to the lavatory structure.

(e) Attach the waste-box console assembly 18-060 with the screws 18-150 and the washers 18-160 to the lavatory structure.

(f) Install and assemble the waste chute 18-010 as follows:

1 Attach the waste chute 18-010 and the caps 18-030 with the screws 18-040 and the nuts 18-020 to the waste-box console assembly 18-060.

(g) Attach the fire extinguisher 18-170 with the screws 18-040, the washers 18-160, 18-175 and the nuts 18-180.

NOTE: For further instructions, see CMMV 26-25-12_U3061 (fire extinguisher).

NOTE: For further instructions, see CMMV 26-25-36_U3061 (fire extinguisher).

(h) Attach the waste container 18-050 to the waste-box console assembly 18-060.

SUB TASK 25-41-51-440-065-H01

D2547160900200 D2547160900400 D2549010400000 D2549010400200
D2549010400400 D2549010400600 D2549010400800 D2549010401000
D2549010401400 D2549010401600 D2549010401800 D2549010402000
D2549010402200 D2549010402400 D2549010402600 D2549010402800
D2549010403000 D2549010403200 D2549010403400 D2549010403600
D2549010403800 D2549010404000 D2549010404200 D2549010404400
D2549010404600 D2549010404800 D2549010405000 D2549010405200
D2549010405400 D2549010405600 D2549010405800 D2549010406000
D2549010406200 D2549010406400 D2549010406800 D2549010407000
D2549010610600 D2549010610800 D2549010611000 D2549010611200
D2549010611400 D2549010611600 D2549010611800 D2549010612400
D2549010612600 D2549010613000 D2549010613200 D2549010613400
D2549010613600 D2549010613800 D2549010614200 D2549010614400
D2549010614600 D2549020300000 D2549020300400 D2549020300600
D2549020300800 D2549020301000 D2549020301600 D2549020301800
D2549020302000 D2549020302800 D2549020400000 D2549020400200
D2549020400400 D2549020400600 D2549020400800 D2549020401000
D2549020401200 D2549020401400 D2549020401600 D2549020402000
D2549020402200 D2549020402400 D2549020402600 D2549020403000
D2549020403200 D2549020403400 D2549020403600 D2549020403800
D2549020404000 D2549020404200 D2549020404400 D2549020404600
D2549020404800 D2549020405000 D2549020405200 D2549020405400
D2549020405600 D2549020405800 D2549020406000 D2549020406200
D2549020406400 D2549020406600 D2549020406800 D2549020407000
D2549020407200 D2549020407400 D2549020407600 D2549020407800
D2549020408000 D2549020408200 D2549020408600 D2549020408800
D2549020409000 D2549020409200 D2549020409400 D2549020409600
D2549020409800 D2549020410200 D2549020410400 D2549020410600
D2549020410800 D2549020411000 D2549020411200 D2549020411400
D2549020411600 D2549020411800 D2549020412000 D2549020412200
D2549020412400 D2549020412600 D2549020412800 D2549020413000
D2549020413200 D2549020413400 D2549020413600 D2549020413800
D2549020414000 D2549020414200 D2549020414600 D2549020414800
D2549020513800 D2549020801800 D2549020804200 D2549020804400
D2549020804800 D2549020805000 D2549020805200 D2549020805400
D2549020805600 D2549020805800 D2549020806000 D2549020806200
D2549020806400 D2549020806600 D2549020806800 D2549020807000
D2549020807200 D2549020807400 D2549020807800 D2549020808200
D2549020809600 D2549020809800 D2549020810000 D2549020810400
D2549020810600 D2549020810800 D2549020811200 D2549020811400
D2549020811600 D2549020811800 D2549020812000 D2549020812200
D2549020812400 D2549020812600 D2549020812800 D2549020813000
D2549020813200 D2549020813400 D2549020813600 D2549020813800
D2549020814000 D2549020814200 D2549020814400 D2549020814600

D2549020814800 D2549030400600 D2549030401000 D2549030401200
D2549030401400 D2549030401600 D2549030401800 D2549030402000
D2549030402200 D2549030404000 D2549030404200 D2549030404600
D2549030404800 D2549030405000 D2549030405600 D2549030405800
D2549030406000 D2549030406400 D2549030406600 D2549030406800
D2549030407000 D2549030407200 D2549030407400 D2549030407600
D2549030407800 D2549030408000 D2549030408200 D2549030408400
D2549030408600 D2549030409000 D2549030409200 D2549030409400
D2549030409600 D2549030409800 D2549030410000 D2549030410200
D2549030410400 D2549030410600 D2549030410800 D2549030411200
D2549030411400 D2549030411600 D2549030411800 D2549030412000
D2549030412200 D2549030412400 D2549030412600 D2549030412800
D2549030413000 D2549030413200 D2549030413400 D2549030413600
D2549030414000 D2549030414200 D2549030414400 D2549030414600
D2549030414800 D2549030614000 D2549030700000 D2549030700200
D2549030700400 D2549030700600 D2549030701000 D2549030701200
D2549030701400 D2549030701600 D2549030701800 D2549030702000
D2549030702200 D2549030702400 D2549030702600 D2549030702800
D2549030703000 D2549030703200 D2549030703400 D2549030703600
D2549030703800 D2549030704000 D2549030704200 D2549030704400
D2549030704800 D2549030705200 D2549030705600 D2549040500200
D2549040500400 D2549040500600 D2549040500800 D2549040501000
D2549040501200 D2549040501400 D2549040501600 D2549040501800
D2549040502000 R225401134-014 R225401134-034 R225401134-036 R225401134-
038 R225401136-004 R225401136-006 R225401136-008 R225401136-012 R225401136-
014 R225401136-018 R225401136-024 R225401145-010 R225401152-008 R225401152-
010 R225401168-012 R225401168-026 R225401183-004 R225401183-006 R225401196-
010 R225401196-012 R225401196-014 R225401196-016 R225401196-018 R225401196-
020 R225401196-022 R225401196-024 R225401196-040 R225401196-042 R225401196-
056 R225401196-058 R225401196-060 R225401196-062 R225401196-064 R225401196-
066 R225401196-068 R225401196-070 R225401199-000 R225401199-010 R225401199-
012 R225401602-000 R225401609-000 R225401611-000 R225401611-006
R225401611-012 R225401611-014 R225401611-016 R225401611-018 R225401611-020
R225401622-002 R225401624-000 R225401627-000 R225401627-002 R225401627-
004 R225401639-000 R225401639-002 R225401643-000 R225401643-002
R225401643-004 R225401643-006 R225401643-008 R225401646-000 R225401646-
002 R225401647-000 R225401648-000 R225401648-002 R225401648-004
R225401648-006 R225401648-008 R225401649-000 R225401656-000 R225401656-
002 R225401658-000 R225401662-000 R225401662-002 R225401671-000
R225401671-002 R225401673-000 R225401673-002 R225401673-004 R225401673-
006 R225401675-000 R225401676-000 R225401683-000 R225401685-000
R225401685-002 R225401688-000 R225401689-004 R225401689-006 R225401691-
000 R225401691-002 R225401697-000 R225401697-002 R225401803-000
R225401803-002 R225401808-000 R225401811-000 R225401814-000

8. Assembly and Installation of the Waste Bin, the Waste Chute and the Fire Extinguisher (18-1)

(a) Assemble the door ejector assembly 18-270 as follows:

WARNING: BE VERY CAREFUL WHEN YOU REMOVE OR INSTALL THE SPRING. BECAUSE THERE IS REMAINING TENSION IN THE SPRING, IT CAN CAUSE YOU INJURY.

1 Attach the spring 18-310, the door ejector pin 18-290 and the hinge pin 18-300 to the door ejector housing 18-280.

(b) Attach the door ejector assembly 18-270 with the screws 18-230, the washers 18-240 and the nuts 18-250 to the waste-box console assembly 18-060.

(c) Assemble the waste-box console assembly 18-060 as follows:

1 Attach the cover 18-100 with the screws 18-110, the washers 18-120 and the nuts 18-130.

(d) Attach the waste-box console assembly 18-060 with the screws 18-150 and the washers 18-160 to the lavatory structure.

(e) Install and assemble the waste chute 18-010 as follows:

1 Attach the waste chute 18-010 with the screws 18-040 to the waste-box console assembly 18-060.

(f) Attach the fire extinguisher 18-170 with the screws 18-040, the washers 18-160, 18-175 and the nuts 18-180.

NOTE: For further instructions, see CMMV 26-25-36_U3061 (fire extinguisher).

(g) Attach the waste container 18-050 to the waste-box console assembly 18-060.

SUB TASK 25-41-51-440-065-J01
D2549020500000 D2549020500200 D2549020500600 D2549020501000 D2549020501400 D2549020502800 D2549020503200 D2549020504800 D2549020505200

9. Assembly and Installation of the Waste Bin, the Waste Chute and the Fire Extinguisher (18-1)

(a) Assemble the waste-box console assembly 18-060 as follows:

1 Attach the cover 18-100 with the screws 18-110, the washers 18-120 and the nuts 18-130.

(b) Attach the waste-box console assembly 18-060 with the screws 18-150 and the washers 18-160 to the lavatory structure.

(c) Install and assemble the waste chute 18-010 as follows:

1 Attach the waste chute 18-010 and the caps 18-030 with the screws 18-040 and the nuts 18-020 to the waste-box console assembly 18-060.

(d) Attach the fire extinguisher 18-170 with the screws 18-040, the washers 18-160, 18-175 and the nuts 18-180.

NOTE: For further instructions, see CMMV 26-25-12_U3061 (fire extinguisher).

NOTE: For further instructions, see CMMV 26-25-36_U3061 (fire extinguisher).

(e) Attach the waste container 18-050 to the waste-box console assembly 18-060.

TASK 25-41-51-400-808-B01
D2549020506000

66. Assembly and Installation of the Waste Bin, the Waste Chute and the Fire Extinguisher

A. General

- Not applicable

B. Procedure

SUB TASK 25-41-51-400-088-A01

1. Assembly and Installation of the Waste Bin, the Waste Chute and the Fire Extinguisher

(a) Not applicable.

TASK 25-41-51-400-809-A01
D2549010500000 D2549010500800 D2549010501200 D2549010502600 D2549010503800 D2549010506000 D2549010507600

67. Assembly and Installation of the Panel Assembly of the Washbasin Unit

A. General

This task gives you the installation and assembly procedures of the component.

B. Job Set-up Information

(1) Not applicable

C. Procedure

WARNING: BE CAREFUL WHEN YOU USE SOLVENTS/CLEANING AGENTS, SEALANTS AND OTHER MATERIALS. OBEY THE MATERIAL MANUFACTURER'S INSTRUCTIONS AND THE LOCAL REGULATIONS. MAKE SURE THAT THERE IS A GOOD FLOW OF AIR THROUGH THE WORK AREA. DO NOT BREATHE THE FUMES. DO NOT SMOKE. DO NOT USE THESE MATERIALS NEAR A FLAME, SPARKS OR SOURCES OF HEAT. USE PROTECTIVE CLOTHING, GOGGLES AND GLOVES. IF YOU GET ONE OF THESE MATERIALS ON YOUR SKIN OR IN YOUR EYES, FLUSH IT AWAY WITH A FLOW OF CLEAN WATER. IF YOU GET ONE OF THESE MATERIALS IN YOUR MOUTH, GET IMMEDIATE MEDICAL AID. IN GENERAL, THESE MATERIALS ARE POISONOUS, FLAMMABLE AND SKIN IRRITANTS.

CAUTION: DO ALL THE WORK ON A CLEAN, SOFT SURFACE TO PREVENT DAMAGE TO THE COMPONENTS.

CAUTION: MAKE SURE THAT ALL THE PARTS ARE CLEAN BEFORE YOU ASSEMBLE THEM.

SUB TASK 25-41-51-400-113-A01

1. Assembly and Installation of the Panel Assembly of the Washbasin Unit (17-1)

(a) Assemble the washbasin unit bracket 17-060 as follows:

1 Attach the washbasin unit bracket 17-090 with the screws 17-070 and the washers 17-080.

(b) Assemble the washbasin unit bracket console 17-020 as follows:

1 Attach the adapter plate 17-050 with the screws 17-030 and the washers 17-040.

(c) Attach the washbasin unit console 17-020 and the washbasin unit bracket 17-060 with the screws 17-140 and the washers 17-120 to the lavatory structure.

(d) Attach the ground cables in accordance with the Process and Material Specification PMS 01-04-58 to the washbasin unit console 17-020 and to the washbasin unit bracket 17-060.

(e) Attach the washbasin-unit panel assembly 17-010 with the screws 17-210 and the washers 17-120 to the washbasin unit bracket 17-060.

(f) Attach the washbasin-unit panel assembly 17-010 and the spacers 17-130 with the screws 17-110 and the washers 17-120 to the washbasin unit console 17-020.

(g) Attach the roll holders 17-150 with the screws 17-210 and the washers 17-120 to the washbasin-unit panel assembly 17-010.

(h) Assemble the paper roll holder 17-170 as follows:

1 Attach the rollers 17-180 with the cable tie 17-185.

(i) Attach the paper roll holder 17-170 with the screws 17-190 to the roll holders 17-150.

TASK 25-41-51-400-809-B01

D2549010500400 D2549010500600 D2549010501000 D2549010501400 D2549010501600
D2549010501800 D2549010502000 D2549010502200 D2549010502400 D2549010502800
D2549010503200 D2549010503400 D2549010503600 D2549010504200 D2549010504400
D2549010504600 D2549010504800 D2549010505000 D2549010505200 D2549010505400
D2549010505600 D2549010505800 D2549010506200 D2549010506400 D2549010507000
D2549010507200 D2549010507400 D2549010507800 D2549010508200 D2549010508400
D2549010508600 D2549010508800 D2549010509200 D2549010511200 D2549020500000
D2549020500200 D2549020500400 D2549020500600 D2549020500800 D2549020501000
D2549020501200 D2549020501400 D2549020501600 D2549020501800 D2549020502000
D2549020502400 D2549020502600 D2549020502800 D2549020503000 D2549020503200
D2549020503400 D2549020503600 D2549020503800 D2549020504200 D2549020504400
D2549020504600 D2549020504800 D2549020505000 D2549020505200 D2549020505400
D2549020505800 D2549020506000 D2549020600000 D2549020600200 D2549020600400
D2549020600800 D2549020601000 D2549020601200 D2549020601400 D2549020601600
D2549020601800 D2549020602000 D2549020602400 D2549020603000 D2549020603200
D2549020603600 D2549020604000 D2549020606400 D2549030500200 D2549030500400
D2549030501000 D2549030501200 D2549030501600 D2549030501800 D2549030502200
D2549030502400 D2549030502600 D2549030503200 D2549030503400 D2549030503600
R225401107-000 R225401107-002 R225401115-002 R225401128-000 R225401133-000
R225401139-000 R225401145-000 R225401146-000 R225401146-002 R225401188-000
R225401188-002 R225401188-006

68. Assembly and Installation of the Panel Assembly of the Washbasin Unit

A. General

This task gives you the installation and assembly procedures of the component.

B. Job Set-up Information

(1) Not applicable

C. Procedure

WARNING: BE CAREFUL WHEN YOU USE SOLVENTS/CLEANING AGENTS, SEALANTS AND OTHER MATERIALS. OBEY THE MATERIAL MANUFACTURER'S INSTRUCTIONS AND THE LOCAL REGULATIONS. MAKE SURE THAT THERE IS A GOOD FLOW OF AIR THROUGH THE WORK AREA. DO NOT BREATHE THE FUMES. DO NOT SMOKE. DO NOT USE THESE MATERIALS NEAR A FLAME, SPARKS OR SOURCES OF HEAT. USE PROTECTIVE CLOTHING, GOGGLES AND GLOVES. IF YOU GET ONE OF THESE MATERIALS ON YOUR SKIN OR IN YOUR EYES, FLUSH IT AWAY WITH A FLOW OF CLEAN WATER. IF YOU GET ONE OF THESE MATERIALS IN YOUR MOUTH, GET IMMEDIATE MEDICAL AID. IN GENERAL, THESE MATERIALS ARE POISONOUS, FLAMMABLE AND SKIN IRRITANTS.

CAUTION: **DO ALL THE WORK ON A CLEAN, SOFT SURFACE TO PREVENT DAMAGE TO THE COMPONENTS.**

CAUTION: **MAKE SURE THAT ALL THE PARTS ARE CLEAN BEFORE YOU ASSEMBLE THEM.**

SUB TASK 25-41-51-400-115-A01

1. Assembly and Installation of the Panel Assembly of the Washbasin Unit (17A-1)

   (a) Assemble the washbasin unit bracket 17A-060 as follows:

      1 Attach the washbasin unit bracket 17A-090 with the screws 17A-070 and the washers 17A-080.

   (b) Assemble the washbasin unit bracket 17A-020 as follows:

      1 Attach the adapter plate 17A-050 with the screws 17A-030, the washers 17A-040, the nuts 17A-045, 17A-046 and the spacers 17A-047.

   (c) Attach the washbasin unit brackets 17A-020, 17A-060 with the screws 17A-106, 17A-107, 17A-130, the washers 17A-108, the spacers 17A-105, 17A-120 and the nuts 17A-109, 17A-110 to the lavatory structure.

   (d) Attach the ground cables in accordance with the Process and Material Specification PMS 01-04-58 to the washbasin unit brackets 17A-020, 17A-060.

   (e) Attach the washbasin-unit panel assembly 17A-010 with the screws 17A-200 and the washers 17A-120 to the washbasin unit bracket 17A-060.

   (f) Attach the washbasin-unit panel assembly 17A-010 with the screws 17A-200, 17A-205 and the washers 17A-120 to the washbasin unit bracket 17A-020.

   (g) Attach the roll holders 17A-140 with the screws 17A-200 and the washers 17A-120 to the washbasin-unit panel assembly 17A-010.

   (h) Assemble the paper roll holder 17A-160 as follows:

      1 Attach the rollers 17A-170 with the cable tie 17A-175.

   (i) Attach the paper roll holder 17A-160 with the screws 17A-180 to the roll holders 17A-140.

TASK 25-41-51-400-809-C01
D2549010506800 D2549010508000 D2549020504000 D2549020602600 D2549020602800 D2549020603400 D2549020603800 D2549020606600 D2549020607200 D2549030500600 D2549030500800 D2549030501400 D2549030502000 D2549030502800 D2549030503000 R225401134-000 R225401188-004

69. Assembly and Installation of the Panel Assembly of the Washbasin Unit

A. General

This task gives you the installation and assembly procedures of the component.

B. Job Set-up Information

(1) Not applicable

C. Procedure

WARNING: BE CAREFUL WHEN YOU USE SOLVENTS/CLEANING AGENTS, SEALANTS AND OTHER MATERIALS. OBEY THE MATERIAL MANUFACTURER'S INSTRUCTIONS AND THE LOCAL REGULATIONS. MAKE SURE THAT THERE IS A GOOD FLOW OF AIR THROUGH THE WORK AREA. DO NOT BREATHE THE FUMES. DO NOT SMOKE. DO NOT USE THESE MATERIALS NEAR A FLAME, SPARKS OR SOURCES OF HEAT. USE PROTECTIVE CLOTHING, GOGGLES AND GLOVES. IF YOU GET ONE OF THESE MATERIALS ON YOUR SKIN OR IN YOUR EYES, FLUSH IT AWAY WITH A FLOW OF CLEAN WATER. IF YOU GET ONE OF THESE MATERIALS IN YOUR MOUTH, GET IMMEDIATE MEDICAL AID. IN GENERAL, THESE MATERIALS ARE POISONOUS, FLAMMABLE AND SKIN IRRITANTS.

CAUTION: DO ALL THE WORK ON A CLEAN, SOFT SURFACE TO PREVENT DAMAGE TO THE COMPONENTS.

CAUTION: MAKE SURE THAT ALL THE PARTS ARE CLEAN BEFORE YOU ASSEMBLE THEM.

SUB TASK 25-41-51-400-116-A01
D2549010506800 D2549020504000 D2549020602600 D2549020602800 D2549020603400 D2549020603800 D2549020606600 D2549020607200 D2549030500600 D2549030500800 D2549030501400 D2549030502000 D2549030502800 D2549030503000 R225401134-000 R225401188-004

1. Assembly and Installation of the Panel Assembly of the Washbasin Unit (17B-1)

(a) Assemble the washbasin unit bracket 17B-060 as follows:

1 Attach the washbasin unit bracket 17B-090 with the screws 17B-070 and the washers 17B-080.

(b) Assemble the washbasin unit bracket 17B-020 as follows:

1 Attach the adapter plate 17B-050 with the screws 17B-030 and the washers 17B-040.

(c) Attach the washbasin unit brackets 17B-020, 17B-060 with the screws 17B-130 and the washers 17B-120 to the lavatory structure.

(d) Attach the ground cables in accordance with the Process and Material Specification PMS 01-04-58 to the washbasin unit brackets 17B-020, 17B-060.

(e) Attach the washbasin-unit panel assembly 17B-010 with the screws 17B-110 and the washers 17B-120 to the washbasin unit bracket 17B-060.

(f) Attach the washbasin-unit panel assembly 17B-010 with the screws 17B-110 and the washers 17B-120 to the washbasin unit bracket 17B-020.

(g) Attach the roll holders 17B-140 with the screws 17B-110 and the washers 17B-120 to the washbasin-unit panel assembly 17B-010.

(h) Assemble the paper roll holder 17B-160 as follows:

1 Attach the rollers 17B-170 with the cable tie 17B-180.

(i) Attach the paper roll holder 17B-160 with the screws 17B-190 to the roll holders 17B-140.

SUB TASK 25-41-51-400-116-B01
D2549010508000

2. Assembly and Installation of the Panel Assembly of the Washbasin Unit (17B-1)

(a) Assemble the washbasin unit bracket 17B-020 as follows:

1 Attach the adapter plate 17B-050 with the screws 17B-030 and the washers 17B-040.

(b) Attach the washbasin unit brackets 17B-020, 17B-060 with the screws 17B-130 and the washers 17B-120 to the lavatory structure.

(c) Attach the ground cables in accordance with the Process and Material Specification PMS 01-04-58 to the washbasin unit brackets 17B-020, 17B-060.

(d) Attach the angle 17B-102 with the screws 17B-104, the washers 17B-106 and the nuts 17B-108 to the washbasin unit bracket 17B-060.

(e) Attach the washbasin-unit panel assembly 17B-010 with the screws 17B-110 and the washers 17B-120 to the washbasin unit bracket 17B-060.

(f) Attach the washbasin-unit panel assembly 17B-010 with the screws 17B-110 and the washers 17B-120 to the washbasin unit bracket 17B-020.

(g) Attach the roll holders 17B-140 with the screws 17B-110 and the washers 17B-120 to the washbasin-unit panel assembly 17B-010.

(h) Assemble the paper roll holder 17B-160 as follows:

1 Attach the rollers 17B-170 with the cable tie 17B-180.

(i) Attach the paper roll holder 17B-160 with the screws 17B-190 to the roll holders 17B-140.

TASK 25-41-51-400-809-D01

D2547160900200 D2547160900400 D2549010400000 D2549010400400 D2549010400800
D2549010401600 D2549010401800 D2549010402000 D2549010402200 D2549010402400
D2549010402600 D2549010402800 D2549010403000 D2549010403600 D2549010404200
D2549010404400 D2549010405200 D2549010405400 D2549010406000 D2549010406200
D2549010406400 D2549010406800 D2549010509000 D2549010509400 D2549010509600
D2549010509800 D2549010510000 D2549010510200 D2549010510400 D2549010510600
D2549010510800 D2549010511000 D2549010511400 D2549010511600 D2549010511800
D2549010512000 D2549010512200 D2549010512400 D2549010512600 D2549010513000
D2549010513200 D2549010513400 D2549010513600 D2549010513800 D2549010514000
D2549010514200 D2549010514600 D2549010514800 D2549010600000 D2549010600200
D2549010600400 D2549010600600 D2549010600800 D2549010601000 D2549010601600
D2549010601800 D2549010602000 D2549010602200 D2549010602400 D2549010602600
D2549010602800 D2549010603000 D2549010603400 D2549010603800 D2549010604000
D2549010604200 D2549010604400 D2549010604600 D2549010605000 D2549010605200
D2549010605600 D2549010605800 D2549010606000 D2549010606200 D2549010606600
D2549010606800 D2549010607000 D2549010607200 D2549010607400 D2549010607600
D2549010608200 D2549010608400 D2549010608600 D2549010608800 D2549010609000
D2549010609200 D2549010609600 D2549010610000 D2549010610200 D2549010610400
D2549010610800 D2549010611200 D2549010611400 D2549010611600 D2549010611800
D2549010612000 D2549010612200 D2549010612400 D2549010613000 D2549010613200
D2549010613600 D2549010613800 D2549010614800 D2549020300000 D2549020300600
D2549020300800 D2549020301000 D2549020301800 D2549020302000 D2549020400000
D2549020400400 D2549020400600 D2549020401200 D2549020401400 D2549020401600
D2549020402000 D2549020402400 D2549020402600 D2549020403000 D2549020403400
D2549020403600 D2549020403800 D2549020404000 D2549020404200 D2549020404600
D2549020404800 D2549020405000 D2549020405200 D2549020405400 D2549020405800
D2549020406000 D2549020406200 D2549020406600 D2549020406800 D2549020407000
D2549020407600 D2549020407800 D2549020408200 D2549020408600 D2549020408800
D2549020409000 D2549020409600 D2549020409800 D2549020410200 D2549020410600
D2549020410800 D2549020411000 D2549020411200 D2549020411400 D2549020411600
D2549020411800 D2549020412600 D2549020413000 D2549020413400 D2549020413600
D2549020413800 D2549020414000 D2549020414200 D2549020414800 D2549020502200
D2549020505600 D2549020506200 D2549020506400 D2549020506600 D2549020506800
D2549020507000 D2549020507200 D2549020507400 D2549020507600 D2549020507800
D2549020508000 D2549020508200 D2549020508400 D2549020508600 D2549020508800
D2549020509000 D2549020509200 D2549020509600 D2549020509800 D2549020510000
D2549020510800 D2549020511000 D2549020511200 D2549020511600 D2549020511800
D2549020512000 D2549020512600 D2549020512800 D2549020513200 D2549020513400
D2549020513600 D2549020513800 D2549020514000 D2549020514200 D2549020514400
D2549020514600 D2549020514800 D2549020602200 D2549020604200 D2549020604400
D2549020604800 D2549020605000 D2549020605200 D2549020605600 D2549020605800
D2549020606000 D2549020606800 D2549020607000 D2549020607400 D2549020607600
D2549020607800 D2549020608200 D2549020608400 D2549020608600 D2549020608800
D2549020609000 D2549020609200 D2549020609400 D2549020609600 D2549020609800
D2549020610000 D2549020610200 D2549020610400 D2549020610600 D2549020611000
D2549020611200 D2549020611400 D2549020611600 D2549020611800 D2549020612000

D2549020612200 D2549020612400 D2549020612600 D2549020612800 D2549020613000
D2549020613200 D2549020613600 D2549020613800 D2549020614000 D2549020614400
D2549020614600 D2549020614800 D2549020700000 D2549020700200 D2549020700400
D2549020700600 D2549020700800 D2549020701000 D2549020701200 D2549020701400
D2549020701600 D2549020701800 D2549020702000 D2549020702400 D2549020702600
D2549020702800 D2549020703200 D2549020703400 D2549020703600 D2549020703800
D2549020704000 D2549020704200 D2549020704400 D2549020704600 D2549020704800
D2549020705000 D2549020705200 D2549020705400 D2549020705600 D2549020706000
D2549020706200 D2549020706400 D2549020706600 D2549020706800 D2549020707000
D2549020707200 D2549020707400 D2549020707600 D2549020707800 D2549020708000
D2549020708200 D2549020708400 D2549020708600 D2549020708800 D2549020709000
D2549020709200 D2549020709400 D2549020709600 D2549020709800 D2549020710200
D2549020710400 D2549020710600 D2549020710800 D2549020711000 D2549020711200
D2549020711400 D2549020711600 D2549020712200 D2549020713200 D2549020713400
D2549020713600 D2549020714000 D2549020714400 D2549020714600 D2549020800000
D2549020800200 D2549020800400 D2549020800600 D2549020801000 D2549020801400
D2549020801600 D2549020801800 D2549020802000 D2549020802200 D2549020802600
D2549020802800 D2549020803000 D2549020803200 D2549020803400 D2549020803600
D2549020804000 D2549020804200 D2549020804400 D2549020804800 D2549020805000
D2549020805600 D2549020805800 D2549020806000 D2549020806600 D2549020807000
D2549020807200 D2549020807600 D2549020807800 D2549020808200 D2549020808400
D2549020808600 D2549020809000 D2549020809600 D2549020809800 D2549020810000
D2549020810200 D2549020810400 D2549020810600 D2549020810800 D2549020811200
D2549020811400 D2549020811800 D2549020812000 D2549020812200 D2549020812600
D2549020812800 D2549020813000 D2549020813600 D2549020813800 D2549020814000
D2549020814200 D2549020814600 D2549030400000 D2549030400200 D2549030400400
D2549030400600 D2549030401000 D2549030401200 D2549030401400 D2549030401600
D2549030401800 D2549030402000 D2549030402400 D2549030402600 D2549030402800
D2549030403000 D2549030403400 D2549030403600 D2549030403800 D2549030404200
D2549030404400 D2549030404600 D2549030404800 D2549030405000 D2549030405200
D2549030405600 D2549030405800 D2549030406000 D2549030406400 D2549030406600
D2549030406800 D2549030407000 D2549030407400 D2549030407600 D2549030407800
D2549030408000 D2549030408200 D2549030408400 D2549030408600 D2549030409000
D2549030409200 D2549030409400 D2549030409800 D2549030410000 D2549030410200
D2549030410400 D2549030411200 D2549030411400 D2549030411600 D2549030411800
D2549030412200 D2549030412400 D2549030412600 D2549030412800 D2549030413000
D2549030413200 D2549030413600 D2549030414400 D2549030414800 D2549030503800
D2549030504000 D2549030504200 D2549030504600 D2549030504800 D2549030505200
D2549030505400 D2549030505600 D2549030505800 D2549030506000 D2549030506200
D2549030506400 D2549030506600 D2549030506800 D2549030507000 D2549030507600
D2549030507800 D2549030508000 D2549030508200 D2549030508400 D2549030508800
D2549030509000 D2549030509200 D2549030509400 D2549030509600 D2549030509800
D2549030510000 D2549030510400 D2549030510600 D2549030510800 D2549030511200
D2549030511400 D2549030511600 D2549030511800 D2549030512200 D2549030512400
D2549030512800 D2549030513000 D2549030513200 D2549030513400 D2549030513600
D2549030513800 D2549030514000 D2549030514200 D2549030514400 D2549030514600
D2549030600000 D2549030600200 D2549030600400 D2549030600600 D2549030601000

D2549030601200 D2549030601400 D2549030601800 D2549030602000 D2549030602200
D2549030602400 D2549030602600 D2549030602800 D2549030603000 D2549030603200
D2549030603400 D2549030603800 D2549030604200 D2549030604400 D2549030604600
D2549030604800 D2549030605000 D2549030605200 D2549030605400 D2549030605600
D2549030605800 D2549030606000 D2549030606200 D2549030606400 D2549030606600
D2549030606800 D2549030607000 D2549030607200 D2549030607400 D2549030607600
D2549030608000 D2549030608200 D2549030608400 D2549030608600 D2549030608800
D2549030609000 D2549030609200 D2549030609800 D2549030610000 D2549030610400
D2549030610600 D2549030611000 D2549030611200 D2549030611400 D2549030611600
D2549030611800 D2549030612000 D2549030612200 D2549030612400 D2549030612800
D2549030613200 D2549030613400 D2549030613800 D2549030614000 D2549030614200
D2549030614400 D2549030614600 D2549030614800 D2549030700000 D2549030700200
D2549030700400 D2549030700800 D2549030701000 D2549030701400 D2549030702200
D2549030702400 D2549030702600 D2549030702800 D2549030703200 D2549030703400
D2549030703600 D2549030703800 D2549030704200 D2549030704600 D2549030705200
D2549040500200 D2549040500400 D2549040500600 D2549040500800 D2549040501000
D2549040501200 D2549040501400 D2549040501600 D2549040501800 D2549040502000
R225401107-004 R225401115-000 R225401134-002 R225401134-004 R225401134-006
R225401134-008 R225401134-010 R225401134-012 R225401134-014 R225401134-016
R225401134-018 R225401134-020 R225401134-022 R225401134-024 R225401134-026
R225401134-028 R225401134-030 R225401134-032 R225401134-034 R225401134-036
R225401134-038 R225401136-000 R225401136-004 R225401136-006 R225401136-008
R225401136-010 R225401136-012 R225401136-014 R225401136-016 R225401136-018
R225401136-020 R225401136-022 R225401136-024 R225401137-000 R225401137-002
R225401137-004 R225401137-006 R225401137-008 R225401137-010 R225401137-012
R225401137-014 R225401137-016 R225401142-000 R225401142-002 R225401145-002
R225401145-004 R225401145-006 R225401145-008 R225401145-010 R225401145-012
R225401145-014 R225401152-000 R225401152-002 R225401152-004 R225401152-006
R225401152-008 R225401152-010 R225401153-000 R225401159-000 R225401160-000
R225401160-002 R225401172-000 R225401172-002 R225401172-004 R225401172-006
R225401172-008 R225401172-010 R225401172-012 R225401172-014 R225401172-016
R225401172-018 R225401175-000 R225401175-002 R225401176-000 R225401192-000
R225401192-002 R225401195-000 R225401196-000 R225401196-002 R225401196-004
R225401196-006 R225401196-008 R225401196-010 R225401196-012 R225401196-014
R225401196-016 R225401196-018 R225401196-020 R225401196-022 R225401196-034
R225401196-036 R225401196-038 R225401196-040 R225401196-042 R225401196-044
R225401196-046 R225401196-048 R225401196-050 R225401196-052 R225401196-054
R225401196-056 R225401196-058 R225401196-060 R225401196-062 R225401196-064
R225401196-066 R225401196-068 R225401199-000 R225401199-002 R225401199-004
R225401199-006 R225401199-008 R225401199-010 R225401199-012 R225401600-000
R225401600-002 R225401600-004 R225401602-000 R225401605-000 R225401605-002
R225401609-000 R225401611-000 R225401611-006 R225401611-008 R225401611-010
R225401611-012 R225401611-014 R225401611-016 R225401611-018 R225401611-020
R225401613-000 R225401614-000 R225401618-000 R225401618-002 R225401619-000
R225401619-002 R225401622-000 R225401622-002 R225401624-000 R225401625-000
R225401627-000 R225401627-002 R225401627-004 R225401629-000 R225401629-002
R225401639-000 R225401639-002 R225401643-000 R225401643-002 R225401643-004

R225401643-006 R225401643-008 R225401646-000 R225401646-002 R225401647-000 R225401648-000 R225401648-002 R225401648-004 R225401648-006 R225401648-008 R225401656-000 R225401656-002 R225401662-000 R225401662-002 R225401673-000 R225401673-002 R225401673-004 R225401673-006 R225401675-000 R225401676-000 R225401683-000 R225401688-000 R225401689-004 R225401689-006 R225401691-000 R225401691-002 R225401693-000 R225401697-000 R225401697-002 R225401803-000 R225401803-002

70. Assembly and Installation of the Panel Assembly of the Washbasin Unit

A. General

This task gives you the installation and assembly procedures of the component.

B. Job Set-up Information

(1) Not applicable

C. Procedure

WARNING: BE CAREFUL WHEN YOU USE SOLVENTS/CLEANING AGENTS, SEALANTS AND OTHER MATERIALS. OBEY THE MATERIAL MANUFACTURER'S INSTRUCTIONS AND THE LOCAL REGULATIONS. MAKE SURE THAT THERE IS A GOOD FLOW OF AIR THROUGH THE WORK AREA. DO NOT BREATHE THE FUMES. DO NOT SMOKE. DO NOT USE THESE MATERIALS NEAR A FLAME, SPARKS OR SOURCES OF HEAT. USE PROTECTIVE CLOTHING, GOGGLES AND GLOVES. IF YOU GET ONE OF THESE MATERIALS ON YOUR SKIN OR IN YOUR EYES, FLUSH IT AWAY WITH A FLOW OF CLEAN WATER. IF YOU GET ONE OF THESE MATERIALS IN YOUR MOUTH, GET IMMEDIATE MEDICAL AID. IN GENERAL, THESE MATERIALS ARE POISONOUS, FLAMMABLE AND SKIN IRRITANTS.

CAUTION: DO ALL THE WORK ON A CLEAN, SOFT SURFACE TO PREVENT DAMAGE TO THE COMPONENTS.

CAUTION: MAKE SURE THAT ALL THE PARTS ARE CLEAN BEFORE YOU ASSEMBLE THEM.

SUB TASK 25-41-51-400-117-A01

1. Assembly and Installation of the Panel Assembly of the Washbasin Unit (17C-1)

(a) Attach the washbasin-unit panel assembly 17C-010 with the screws 17C-020 and the washers 17C-030 to the lavatory structure.

(b) Attach the ground cable in accordance with the Process and Material Specification PMS 01-04-58 to the washbasin-unit panel assembly 17C-010.

(c) Assemble the paper roll holder assembly 17C-040 as follows:

1 Attach the rollers 17C-050 with the cable tie 17C-060.

(d) Attach the paper roll holder assembly 17C-040 to the washbasin-unit panel assembly 17C-010.

TASK 25-41-51-400-809-E01

D2549010400200 D2549010400600 D2549010401000 D2549010401400 D2549010403200
D2549010403400 D2549010403800 D2549010404000 D2549010404600 D2549010404800
D2549010405000 D2549010405800 D2549010407000 D2549010514400 D2549010601200
D2549010601400 D2549010603200 D2549010603600 D2549010604800 D2549010606400
D2549010607800 D2549010609400 D2549010609800 D2549010610600 D2549010611000
D2549010612600 D2549010613400 D2549010614200 D2549010614400 D2549010614600
D2549020300400 D2549020301600 D2549020302800 D2549020400200 D2549020400800
D2549020401000 D2549020402200 D2549020403200 D2549020404400 D2549020405600
D2549020406400 D2549020407200 D2549020407400 D2549020408000 D2549020409200
D2549020409400 D2549020410400 D2549020412000 D2549020412200 D2549020412400
D2549020412800 D2549020413200 D2549020414600 D2549020510400 D2549020510600
D2549020512200 D2549020512400 D2549020513000 D2549020604600 D2549020605400
D2549020610800 D2549020702200 D2549020705800 D2549020710000 D2549020712400
D2549020712800 D2549020713000 D2549020713800 D2549020800800 D2549020801200
D2549020802400 D2549020803800 D2549020805200 D2549020805400 D2549020806200
D2549020806400 D2549020806800 D2549020807400 D2549020808800 D2549020809400
D2549020811600 D2549020812400 D2549020813200 D2549020813400 D2549020814400
D2549020814800 D2549030402200 D2549030404000 D2549030405400 D2549030407200
D2549030409600 D2549030410600 D2549030410800 D2549030412000 D2549030414000
D2549030414200 D2549030507200 D2549030507400 D2549030508600 D2549030510200
D2549030511000 D2549030512000 D2549030514800 D2549030600800 D2549030601600
D2549030603600 D2549030607800 D2549030612600 D2549030613600 D2549030700600
D2549030701600 D2549030704000 D2549030704800 R225401168-000 R225401168-002
R225401168-004 R225401168-006 R225401168-008 R225401168-010 R225401168-012
R225401168-014 R225401168-016 R225401168-018 R225401168-020 R225401168-022
R225401168-024 R225401168-026 R225401168-028 R225401183-000 R225401183-002
R225401183-004 R225401183-006 R225401183-008 R225401196-024 R225401196-070
R225401603-000 R225401649-000 R225401658-000 R225401671-000 R225401671-002
R225401685-000 R225401685-002 R225401811-000

71. Assembly and Installation of the Panel Assembly of the Washbasin Unit

A. General

This task gives you the installation and assembly procedures of the component.

B. Job Set-up Information

(1) Not applicable

C. Procedure

WARNING: **BE CAREFUL WHEN YOU USE SOLVENTS/CLEANING AGENTS, SEALANTS AND OTHER MATERIALS. OBEY THE MATERIAL MANUFACTURER'S INSTRUCTIONS AND THE LOCAL REGULATIONS. MAKE SURE THAT THERE IS A GOOD FLOW OF AIR THROUGH THE WORK AREA. DO NOT BREATHE THE FUMES. DO NOT SMOKE. DO NOT USE THESE MATERIALS NEAR A FLAME, SPARKS OR SOURCES OF HEAT. USE PROTECTIVE CLOTHING, GOGGLES AND GLOVES. IF YOU GET ONE OF THESE MATERIALS ON YOUR SKIN OR IN YOUR EYES, FLUSH IT AWAY WITH A FLOW OF CLEAN WATER. IF YOU GET ONE OF THESE MATERIALS IN YOUR MOUTH, GET IMMEDIATE MEDICAL AID. IN GENERAL, THESE MATERIALS ARE POISONOUS, FLAMMABLE AND SKIN IRRITANTS.**

CAUTION: **DO ALL THE WORK ON A CLEAN, SOFT SURFACE TO PREVENT DAMAGE TO THE COMPONENTS.**

CAUTION: **MAKE SURE THAT ALL THE PARTS ARE CLEAN BEFORE YOU ASSEMBLE THEM.**

SUB TASK 25-41-51-400-119-A01

1. Assembly and Installation of the Panel Assembly of the Washbasin Unit (17D-1)

   (a) Attach the washbasin-unit panel assembly 17D-010 with the screws 17D-020 and the washers 17D-030 to the lavatory structure.

   (b) Attach the ground cable in accordance with the Process and Material Specification PMS 01-04-58 to the washbasin-unit panel assembly 17D-010.

   (c) Assemble the paper roll holder assembly 17D-040 as follows:

      1 Attach the rollers 17D-050 with the cable tie 17D-060.

   (d) Attach the paper roll holder assembly 17D-040 to the washbasin-unit panel assembly 17D-010.

TASK 25-41-51-400-809-F01
D2549010405600 D2549030413400 D2549030414600 D2549030701800 D2549030702000 D2549030703000 D2549030704400 D2549030705600 R225401808-000 R225401814-000

72. Assembly and Installation of the Panel Assembly of the Washbasin Unit

A. General

This task gives you the installation and assembly procedures of the component.

B. Job Set-up Information

(1) Not applicable

C. Procedure

WARNING: BE CAREFUL WHEN YOU USE SOLVENTS/CLEANING AGENTS, SEALANTS AND OTHER MATERIALS. OBEY THE MATERIAL MANUFACTURER'S INSTRUCTIONS AND THE LOCAL REGULATIONS. MAKE SURE THAT THERE IS A GOOD FLOW OF AIR THROUGH THE WORK AREA. DO NOT BREATHE THE FUMES. DO NOT SMOKE. DO NOT USE THESE MATERIALS NEAR A FLAME, SPARKS OR SOURCES OF HEAT. USE PROTECTIVE CLOTHING, GOGGLES AND GLOVES. IF YOU GET ONE OF THESE MATERIALS ON YOUR SKIN OR IN YOUR EYES, FLUSH IT AWAY WITH A FLOW OF CLEAN WATER. IF YOU GET ONE OF THESE MATERIALS IN YOUR MOUTH, GET IMMEDIATE MEDICAL AID. IN GENERAL, THESE MATERIALS ARE POISONOUS, FLAMMABLE AND SKIN IRRITANTS.

CAUTION: DO ALL THE WORK ON A CLEAN, SOFT SURFACE TO PREVENT DAMAGE TO THE COMPONENTS.

CAUTION: MAKE SURE THAT ALL THE PARTS ARE CLEAN BEFORE YOU ASSEMBLE THEM.

SUB TASK 25-41-51-400-120-A01

1. Assembly and Installation of the Panel Assembly of the Washbasin Unit (17E-1)

(a) Attach the washbasin-unit panel assembly 17E-010 with the screws 17E-020 and the washers 17E-030 to the lavatory structure.

(b) Attach the ground cable in accordance with the Process and Material Specification PMS 01-04-58 to the washbasin-unit panel assembly 17E-010.

(c) Assemble the paper roll holder assembly 17E-040 as follows:

1 Attach the rollers 17E-050 with the cable tie 17E-060.

(d) Attach the paper roll holder assembly 17E-040 to the washbasin-unit panel assembly 17E-010.

TASK 25-41-51-400-809-G01
D2547161903000

73. Assembly and Installation of the Panel Assembly of the Washbasin Unit

A. General

This task gives you the installation and assembly procedures of the component.

B. Job Set-up Information

(1) Not applicable

C. Procedure

WARNING: BE CAREFUL WHEN YOU USE SOLVENTS/CLEANING AGENTS, SEALANTS AND OTHER MATERIALS. OBEY THE MATERIAL MANUFACTURER'S INSTRUCTIONS AND THE LOCAL REGULATIONS. MAKE SURE THAT THERE IS A GOOD FLOW OF AIR THROUGH THE WORK AREA. DO NOT BREATHE THE FUMES. DO NOT SMOKE. DO NOT USE THESE MATERIALS NEAR A FLAME, SPARKS OR SOURCES OF HEAT. USE PROTECTIVE CLOTHING, GOGGLES AND GLOVES. IF YOU GET ONE OF THESE MATERIALS ON YOUR SKIN OR IN YOUR EYES, FLUSH IT AWAY WITH A FLOW OF CLEAN WATER. IF YOU GET ONE OF THESE MATERIALS IN YOUR MOUTH, GET IMMEDIATE MEDICAL AID. IN GENERAL, THESE MATERIALS ARE POISONOUS, FLAMMABLE AND SKIN IRRITANTS.

CAUTION: DO ALL THE WORK ON A CLEAN, SOFT SURFACE TO PREVENT DAMAGE TO THE COMPONENTS.

CAUTION: MAKE SURE THAT ALL THE PARTS ARE CLEAN BEFORE YOU ASSEMBLE THEM.

SUB TASK 25-41-51-400-122-A01

1. Assembly and Installation of the Panel Assembly of the Washbasin Unit (17F-1)

(a) Assemble the washbasin unit bracket 17F-100 as follows:

1 Attach the spacer 17F-160 with the screws 17F-210, the washers 17F-180 and the nuts 17F-190 to the bracket 17F-150.

2 Attach the bracket 17F-150 with the screws 17F-170, the washers 17F-180 and the nuts 17F-200.

(b) Assemble the bracket 17F-120 as follows:

1 Attach the spacer 17F-160 with the screws 17F-210, the washers 17F-180 and the nuts 17F-190 to the bracket 17F-140.

2 Attach the bracket 17F-140 with the screws 17F-170, the washers 17F-180 and the nuts 17F-200.

(c) Attach the washbasin unit bracket 17F-100 and the bracket 17F-120 with the screws 17F-110 and the washers 17F-040 to the lavatory structure.

(d) Attach the ground cables in accordance with the Process and Material Specification PMS 01-04-58 to the washbasin unit bracket 17F-100 and to the bracket 17F-120.

(e) Attach the cling strip 17F-135.

(f) Attach the washbasin-unit panel assembly 17F-010 with the screws 17F-050 and the washers 17F-180 to the washbasin unit bracket 17F-100 and to the bracket 17F-120.

(g) Attach the roll holders 17F-020 with the screws 17F-050 and the washers 17F-040 to the washbasin-unit panel assembly 17F-010.

(h) Assemble the paper roll holder 17F-070 as follows:

1 Attach the rollers 17F-080 with the cable tie 17F-090.

(i) Attach the paper roll holder 17F-070 with the screws 17F-060 to the roll holders 17F-020.

TASK 25-41-51-400-809-H01
D2549020712000 D2549020712600 D2549030610200 D2549030701200

74. Assembly and Installation of the Panel Assembly of the Washbasin Unit

A. General

This task gives you the installation and assembly procedures of the component.

B. Job Set-up Information

(1) Not applicable

C. Procedure

WARNING: BE CAREFUL WHEN YOU USE SOLVENTS/CLEANING AGENTS, SEALANTS AND OTHER MATERIALS. OBEY THE MATERIAL MANUFACTURER'S INSTRUCTIONS AND THE LOCAL REGULATIONS. MAKE SURE THAT THERE IS A GOOD FLOW OF AIR THROUGH THE WORK AREA. DO NOT BREATHE THE FUMES. DO NOT SMOKE. DO NOT USE THESE MATERIALS NEAR A FLAME, SPARKS OR SOURCES OF HEAT. USE PROTECTIVE CLOTHING, GOGGLES AND GLOVES. IF YOU GET ONE OF THESE MATERIALS ON YOUR SKIN OR IN YOUR EYES, FLUSH IT AWAY WITH A FLOW OF CLEAN WATER. IF YOU GET ONE OF THESE MATERIALS IN YOUR MOUTH, GET IMMEDIATE MEDICAL AID. IN GENERAL, THESE MATERIALS ARE POISONOUS, FLAMMABLE AND SKIN IRRITANTS.

CAUTION: DO ALL THE WORK ON A CLEAN, SOFT SURFACE TO PREVENT DAMAGE TO THE COMPONENTS.

CAUTION: MAKE SURE THAT ALL THE PARTS ARE CLEAN BEFORE YOU ASSEMBLE THEM.

SUB TASK 25-41-51-400-121-A01

1. Assembly and Installation of the Panel Assembly of the Washbasin Unit (17G-1)

(a) Assemble the washbasin-unit panel assembly 17G-010 as follows:

1 Attach the angle 17G-140 with the screws 17G-070 and the washers 17G-060.

2 Attach the washbasin unit bracket 17G-130 with the screws 17G-070 and the washers 17G-060.

3 Install and assemble the washbasin unit bracket 17G-100 as follows:

a Attach the bracket 17G-110 with the screws 17G-070 and the washers 17G-060 to the washbasin-unit panel assembly 17G-010.

(b) Attach the washbasin-unit panel assembly 17G-010 with the screws 17G-070, 17G-080 and the washers 17G-060, 17G-090 to the lavatory structure.

(c) Attach the ground cable in accordance with the Process and Material Specification PMS 01-04-58 to the washbasin-unit panel assembly 17G-010.

(d) Assemble the paper roll holder assembly 17G-020 as follows:

1 Attach the rollers 17G-030 with the cable tie 17G-040.

(e) Attach the paper roll holder assembly 17G-020 to the washbasin-unit panel assembly 17G-010.

TASK 25-41-51-400-810-A01

D2547161903000 D2549010500000 D2549010500400 D2549010500600 D2549010500800 D2549010501000 D2549010501200 D2549010501400 D2549010501600 D2549010501800 D2549010502000 D2549010502200 D2549010502400 D2549010502600 D2549010502800 D2549010503200 D2549010503400 D2549010503600 D2549010503800 D2549010504200 D2549010504400 D2549010504600 D2549010504800 D2549010505000 D2549010505200 D2549010505400 D2549010505600 D2549010505800 D2549010506000 D2549010506200 D2549010506400 D2549010507000 D2549010507200 D2549010507400 D2549010507600 D2549010507800 D2549010508000 D2549010606200 D2549020500000 D2549020500200 D2549020500400 D2549020500600 D2549020500800 D2549020501000 D2549020501200 D2549020501400 D2549020501600 D2549020501800 D2549020502000 D2549020502400 D2549020502600 D2549020502800 D2549020503000 D2549020503200 D2549020503400 D2549020503600 D2549020503800 D2549020504000 D2549020504200 D2549020504400 D2549020504600 D2549020504800 D2549020505000 D2549020505200 D2549020505800 D2549020506000 D2549020600000 D2549020600200 D2549020600400 D2549020600800 D2549020601000 D2549020601200 D2549020601400 D2549020601600 D2549020602000 D2549020602400 D2549020602800 D2549030500200 D2549030500400 D2549030500600 D2549030500800 D2549030501000 D2549030501200 D2549030501400 D2549030501600 D2549030501800 D2549030502000 D2549030502200 D2549030502400 D2549030502600 D2549030502800 D2549030503000 D2549030503200 D2549030503400 R225401107-000 R225401115-002 R225401128-000 R225401133-000 R225401134-000 R225401139-000 R225401146-000 R225401146-002 R225401188-000 R225401188-002 R225401188-004 R225401188-006

75. Assembly and Installation of the Door Assembly of the Washbasin Unit

A. General

This task gives you the installation and assembly procedures of the component.

B. Procedure

WARNING: BE CAREFUL WHEN YOU USE SOLVENTS/CLEANING AGENTS, SEALANTS AND OTHER MATERIALS. OBEY THE MATERIAL MANUFACTURER'S INSTRUCTIONS AND THE LOCAL REGULATIONS. MAKE SURE THAT THERE IS A GOOD FLOW OF AIR THROUGH THE WORK AREA. DO NOT BREATHE THE FUMES. DO NOT SMOKE. DO NOT USE THESE MATERIALS NEAR A FLAME, SPARKS OR SOURCES OF HEAT. USE PROTECTIVE CLOTHING, GOGGLES AND GLOVES. IF YOU GET ONE OF THESE MATERIALS ON YOUR SKIN OR IN YOUR EYES, FLUSH IT AWAY WITH A FLOW OF CLEAN WATER. IF YOU GET ONE OF THESE MATERIALS IN YOUR MOUTH, GET IMMEDIATE MEDICAL AID. IN GENERAL, THESE MATERIALS ARE POISONOUS, FLAMMABLE AND SKIN IRRITANTS.

CAUTION: DO ALL THE WORK ON A CLEAN, SOFT SURFACE TO PREVENT DAMAGE TO THE COMPONENTS.

CAUTION: **MAKE SURE THAT ALL THE PARTS ARE CLEAN BEFORE YOU ASSEMBLE THEM.**

SUB TASK 25-41-51-400-106-A01
D2549010606200

1. Assembly and Installation of the Door Assembly of the Washbasin Unit (16-1)

   (a) Attach the lock insert 16-170 with the screws 16-180 to the angle 16-150.

   (b) Attach the sealing section 16-160 and the angle 16-150 with the screws 16-120 to the lavatory structure.

   (c) Assemble the mounting angle assembly 16-100 as follows:

      1 Attach the bushing 16-110 to the mounting angle 16-115.

   (d) Attach the mounting angle assembly 16-100 with the screws 16-120.

   (e) Assemble the mounting angle assembly 16-080 as follows:

      1 Attach the bushing 16-090 to the mounting angle 16-085.

   (f) Attach the mounting angle assembly 16-080 with the screws 16-120.

   (g) Install and assemble the washbasin-unit door assembly 16-010 as follows:

      1 Attach the latch assembly 16-060 and the mounting plate 16-040 with the screws 16-050 to the washbasin-unit door assembly 16-010.

      2 Attach the attach pins 16-020, 16-030 to the washbasin-unit door assembly 16-010.

      3 Attach the washbasin-unit door assembly 16-010 with the attach pins 16-020, 16-030 to the mounting angle assemblies 16-080, 16-100.

SUB TASK 25-41-51-400-106-B01
D2547161903000 D2549010500000 D2549010500400 D2549010500600
D2549010500800 D2549010501000 D2549010501200 D2549010501400
D2549010501600 D2549010501800 D2549010502000 D2549010502200
D2549010502400 D2549010502600 D2549010502800 D2549010503200
D2549010503400 D2549010503600 D2549010503800 D2549010504200
D2549010504400 D2549010504600 D2549010504800 D2549010505000
D2549010505200 D2549010505400 D2549010505600 D2549010505800
D2549010506000 D2549010506200 D2549010506400 D2549010507000
D2549010507200 D2549010507400 D2549010507600 D2549010507800

D2549010508000 D2549020500000 D2549020500200 D2549020500400 D2549020500600 D2549020500800 D2549020501000 D2549020501200 D2549020501400 D2549020501600 D2549020501800 D2549020502000 D2549020502400 D2549020502600 D2549020502800 D2549020503000 D2549020503200 D2549020503400 D2549020503600 D2549020503800 D2549020504000 D2549020504200 D2549020504400 D2549020504600 D2549020504800 D2549020505000 D2549020505200 D2549020505800 D2549020506000 D2549020600000 D2549020600200 D2549020600400 D2549020600800 D2549020601000 D2549020601200 D2549020601400 D2549020601600 D2549020602000 D2549020602400 D2549020602800 D2549030500200 D2549030500400 D2549030500600 D2549030500800 D2549030501000 D2549030501200 D2549030501400 D2549030501600 D2549030501800 D2549030502000 D2549030502200 D2549030502400 D2549030502600 D2549030502800 D2549030503000 D2549030503200 D2549030503400 R225401107-000 R225401115-002 R225401128-000 R225401133-000 R225401134-000 R225401139-000 R225401146-000 R225401146-002 R225401188-000 R225401188-002 R225401188-004 R225401188-006

2. Assembly and Installation of the Door Assembly of the Washbasin Unit (16-1)

   (a) Attach the lock insert 16-170 with the screws 16-180 and the washers 16-135 to the angle 16-150.

   (b) Attach the sealing section 16-160 and the angle 16-150 with the screws 16-120 and the washers 16-130 to the lavatory structure.

   (c) Assemble the mounting angle assembly 16-100 as follows:

      1 Attach the bushing 16-110 to the mounting angle 16-115.

   (d) Attach the mounting angle assembly 16-100 with the screws 16-120 and the washers 16-130.

   (e) Assemble the mounting angle assembly 16-080 as follows:

      1 Attach the bushing 16-090 to the mounting angle 16-085.

   (f) Attach the mounting angle assembly 16-080 with the screws 16-120 and the washers 16-130.

   (g) Install and assemble the washbasin-unit door assembly 16-010 as follows:

      1 Attach the latch assembly 16-060 and the mounting plate 16-040 with the screws 16-050 to the washbasin-unit door assembly 16-010.

2 Attach the attach pins 16-020, 16-030 to the washbasin-unit door assembly 16-010.

3 Attach the washbasin-unit door assembly 16-010 with the attach pins 16-020, 16-030 to the mounting angle assemblies 16-080, 16-100.

TASK 25-41-51-400-810-B01
D2549010506800 D2549010508200 D2549010508400 D2549010508600 D2549010508800 D2549010509000 D2549010509200 D2549010511200 D2549020505400 D2549020601800 D2549020602600 D2549020603000 D2549020603200 D2549020603400 D2549020603600 D2549020603800 D2549020604000 D2549020606400 D2549020606600 D2549020607200 D2549030503600 R225401107-002 R225401145-000

76. Assembly and Installation of the Door Assembly of the Washbasin Unit

A. General

This task gives you the installation and assembly procedures of the component.

B. Procedure

WARNING: BE CAREFUL WHEN YOU USE SOLVENTS/CLEANING AGENTS, SEALANTS AND OTHER MATERIALS. OBEY THE MATERIAL MANUFACTURER'S INSTRUCTIONS AND THE LOCAL REGULATIONS. MAKE SURE THAT THERE IS A GOOD FLOW OF AIR THROUGH THE WORK AREA. DO NOT BREATHE THE FUMES. DO NOT SMOKE. DO NOT USE THESE MATERIALS NEAR A FLAME, SPARKS OR SOURCES OF HEAT. USE PROTECTIVE CLOTHING, GOGGLES AND GLOVES. IF YOU GET ONE OF THESE MATERIALS ON YOUR SKIN OR IN YOUR EYES, FLUSH IT AWAY WITH A FLOW OF CLEAN WATER. IF YOU GET ONE OF THESE MATERIALS IN YOUR MOUTH, GET IMMEDIATE MEDICAL AID. IN GENERAL, THESE MATERIALS ARE POISONOUS, FLAMMABLE AND SKIN IRRITANTS.

CAUTION: DO ALL THE WORK ON A CLEAN, SOFT SURFACE TO PREVENT DAMAGE TO THE COMPONENTS.

CAUTION: MAKE SURE THAT ALL THE PARTS ARE CLEAN BEFORE YOU ASSEMBLE THEM.

SUB TASK 25-41-51-400-107-A01

1. Assembly and Installation of the Door Assembly of the Washbasin Unit (16A-1)

(a) Attach the lock insert 16A-170 with the screws 16A-180 and the washers 16A-140 to the angle 16A-150.

(b) Attach the sealing section 16A-160 and the angle 16A-150 with the screws 16A-120 and the washers 16A-130 to the lavatory structure.

(c) Assemble the mounting angle assembly 16A-100 as follows:

1 Attach the bushing 16A-110 to the mounting angle 16A-105.

(d) Attach the mounting angle assembly 16A-100 with the screws 16A-120, 16A-122 and the washers 16A-130.

(e) Assemble the mounting angle assembly 16A-080 as follows:

1 Attach the bushing 16A-090 to the mounting angle 16A-085.

(f) Attach the mounting angle assembly 16A-080 with the screws 16A-120 and the washers 16A-130.

(g) Install and assemble the washbasin-unit door assembly 16A-010 as follows:

1 Attach the latch assembly 16A-060 and the mounting plate 16A-040 with the screws 16A-050 to the washbasin-unit door assembly 16A-010.

2 Attach the attach pins 16A-020, 16A-030 to the washbasin-unit door assembly 16A-010.

3 Attach the washbasin-unit door assembly 16A-010 with the attach pins 16A-020, 16A-030 to the mounting angle assemblies 16A-080, 16A-100.

TASK 25-41-51-400-810-C01

D2549010400000 D2549010400400 D2549010401800 D2549010402400 D2549010403200
D2549010404000 D2549010404200 D2549010404600 D2549010404800 D2549010405600
D2549010509400 D2549010509600 D2549010509800 D2549010510000 D2549010510200
D2549010510400 D2549010510800 D2549010511000 D2549010511400 D2549010511600
D2549010511800 D2549010512000 D2549010512200 D2549010512400 D2549010512600
D2549010513000 D2549010513200 D2549010513400 D2549010513600 D2549010513800
D2549010514000 D2549010514200 D2549010514600 D2549010514800 D2549010600000
D2549010600200 D2549010600400 D2549010600600 D2549010600800 D2549010601000
D2549010601200 D2549010601400 D2549010601600 D2549010601800 D2549010602000
D2549010602200 D2549010602400 D2549010602600 D2549010602800 D2549010603200
D2549010603800 D2549010604000 D2549010604200 D2549010604400 D2549010604600
D2549010604800 D2549010605000 D2549010605600 D2549010606000 D2549010606400
D2549010606600 D2549010606800 D2549010607000 D2549010607200 D2549010607400
D2549010607800 D2549010608600 D2549010608800 D2549010609000 D2549010609200
D2549010609400 D2549010609600 D2549010610000 D2549010610200 D2549010610600
D2549010611400 D2549010611600 D2549010612000 D2549010612200 D2549010612400
D2549010613000 D2549010613200 D2549010613600 D2549010614400 D2549010614800
D2549020301000 D2549020402200 D2549020402400 D2549020403000 D2549020403400
D2549020404200 D2549020406600 D2549020406800 D2549020408600 D2549020408800
D2549020409000 D2549020410600 D2549020410800 D2549020411000 D2549020411800
D2549020412200 D2549020412800 D2549020413000 D2549020413600 D2549020414000
D2549020505600 D2549020506200 D2549020506400 D2549020506600 D2549020506800
D2549020507000 D2549020507200 D2549020507400 D2549020507600 D2549020507800
D2549020508200 D2549020508400 D2549020508600 D2549020508800 D2549020509000
D2549020509200 D2549020509600 D2549020510400 D2549020511200 D2549020512000
D2549020512800 D2549020513200 D2549020513400 D2549020513600 D2549020513800
D2549020514000 D2549020514800 D2549020604200 D2549020604400 D2549020605000
D2549020605200 D2549020605600 D2549020605800 D2549020606000 D2549020607000
D2549020607800 D2549020608200 D2549020608400 D2549020608600 D2549020608800
D2549020609200 D2549020609400 D2549020609800 D2549020610000 D2549020610200
D2549020610400 D2549020610600 D2549020611000 D2549020611200 D2549020611400
D2549020611600 D2549020611800 D2549020612000 D2549020612200 D2549020612400
D2549020612600 D2549020612800 D2549020613000 D2549020613600 D2549020614000
D2549020614400 D2549020614600 D2549020614800 D2549020700000 D2549020700200
D2549020700800 D2549020701000 D2549020701600 D2549020701800 D2549020702000
D2549020702400 D2549020702600 D2549020702800 D2549020703200 D2549020703400
D2549020703600 D2549020703800 D2549020704000 D2549020704200 D2549020704400
D2549020704600 D2549020704800 D2549020705000 D2549020705200 D2549020705400
D2549020705600 D2549020706400 D2549020706800 D2549020707000 D2549020707200
D2549020707400 D2549020707600 D2549020708000 D2549020708200 D2549020708400
D2549020708600 D2549020709200 D2549020709400 D2549020709600 D2549020709800
D2549020710200 D2549020710400 D2549020710600 D2549020711000 D2549020711200
D2549020711400 D2549020712200 D2549020713200 D2549020713400 D2549020713800
D2549020714000 D2549020714400 D2549020800000 D2549020800600 D2549020801000
D2549020801400 D2549020801600 D2549020801800 D2549020802200 D2549020803600
D2549020804000 D2549020804200 D2549020804800 D2549020805000 D2549020805400

D2549020805800 D2549020806000 D2549020807000 D2549020808600 D2549020809800
D2549020810200 D2549020810600 D2549020811800 D2549020812600 D2549020813000
D2549020813800 D2549020814000 D2549030400000 D2549030400200 D2549030400400
D2549030401200 D2549030401400 D2549030401600 D2549030402000 D2549030402400
D2549030402600 D2549030402800 D2549030403000 D2549030403400 D2549030403600
D2549030403800 D2549030404000 D2549030404200 D2549030404400 D2549030404600
D2549030404800 D2549030405200 D2549030405600 D2549030405800 D2549030406000
D2549030406400 D2549030406800 D2549030407000 D2549030407600 D2549030407800
D2549030408000 D2549030408200 D2549030408400 D2549030408600 D2549030409000
D2549030409200 D2549030409400 D2549030411200 D2549030411400 D2549030411600
D2549030411800 D2549030412000 D2549030412200 D2549030412400 D2549030413400
D2549030414000 D2549030414600 D2549030414800 D2549030503800 D2549030504000
D2549030504200 D2549030504600 D2549030504800 D2549030505200 D2549030505400
D2549030505600 D2549030505800 D2549030506000 D2549030506400 D2549030506600
D2549030506800 D2549030507000 D2549030507600 D2549030507800 D2549030508000
D2549030508200 D2549030508400 D2549030508800 D2549030509000 D2549030509200
D2549030509400 D2549030509600 D2549030509800 D2549030510000 D2549030510400
D2549030510600 D2549030510800 D2549030511000 D2549030511200 D2549030511400
D2549030511600 D2549030511800 D2549030512000 D2549030512200 D2549030512400
D2549030512800 D2549030513000 D2549030513200 D2549030513400 D2549030513600
D2549030513800 D2549030514000 D2549030514400 D2549030514600 D2549030514800
D2549030600000 D2549030600200 D2549030600400 D2549030601200 D2549030601400
D2549030601800 D2549030602000 D2549030602200 D2549030602400 D2549030602800
D2549030603000 D2549030603200 D2549030603400 D2549030603800 D2549030604200
D2549030604400 D2549030604600 D2549030604800 D2549030605000 D2549030605200
D2549030605400 D2549030605600 D2549030606200 D2549030606400 D2549030606800
D2549030607000 D2549030607200 D2549030607400 D2549030607600 D2549030608000
D2549030608200 D2549030608600 D2549030608800 D2549030609000 D2549030609200
D2549030609800 D2549030610000 D2549030610400 D2549030610600 D2549030611000
D2549030611200 D2549030611400 D2549030611600 D2549030612000 D2549030612400
D2549030612800 D2549030613200 D2549030613600 D2549030613800 D2549030614000
D2549030614200 D2549030614400 D2549030614600 D2549030614800 D2549030700000
D2549030700200 D2549030700800 D2549030701800 D2549030702200 D2549030703200
D2549030703600 D2549030704200 D2549030704400 D2549030704600 D2549030705600
D2549040500200 D2549040501800 D2549040502000 R225401107-004 R225401115-000
R225401134-002 R225401134-004 R225401134-006 R225401134-008 R225401134-010
R225401134-012 R225401134-014 R225401134-016 R225401134-018 R225401134-020
R225401134-022 R225401134-024 R225401134-026 R225401134-028 R225401134-030
R225401134-032 R225401134-034 R225401134-036 R225401134-038 R225401136-000
R225401136-006 R225401136-008 R225401136-010 R225401136-012 R225401136-014
R225401136-016 R225401136-020 R225401136-022 R225401136-024 R225401137-000
R225401137-002 R225401137-004 R225401137-006 R225401137-008 R225401137-010
R225401137-012 R225401137-014 R225401137-016 R225401142-000 R225401142-002
R225401145-002 R225401145-004 R225401145-006 R225401145-008 R225401145-012
R225401145-014 R225401152-000 R225401152-002 R225401152-004 R225401152-006
R225401152-008 R225401153-000 R225401159-000 R225401160-000 R225401160-002
R225401172-000 R225401172-002 R225401172-004 R225401172-006 R225401172-008

R225401172-010 R225401172-012 R225401172-014 R225401172-016 R225401172-018
R225401175-000 R225401175-002 R225401176-000 R225401183-000 R225401183-002
R225401183-004 R225401183-006 R225401183-008 R225401195-000 R225401196-000
R225401196-002 R225401196-004 R225401196-006 R225401196-008 R225401196-010
R225401196-012 R225401196-014 R225401196-022 R225401196-034 R225401196-036
R225401196-038 R225401196-040 R225401196-044 R225401196-046 R225401196-048
R225401196-050 R225401196-052 R225401196-054 R225401196-056 R225401196-058
R225401196-060 R225401196-068 R225401199-000 R225401199-004 R225401199-008
R225401600-000 R225401600-002 R225401600-004 R225401603-000 R225401609-000
R225401611-006 R225401611-010 R225401611-012 R225401613-000 R225401614-000
R225401618-000 R225401618-002 R225401622-000 R225401622-002 R225401625-000
R225401646-002 R225401647-000 R225401648-000 R225401648-002 R225401648-004
R225401648-006 R225401648-008 R225401656-000 R225401662-000 R225401671-000
R225401685-000 R225401685-002 R225401688-000 R225401697-000 R225401803-000
R225401803-002 R225401808-000 R225401811-000 R225401814-000

77. Assembly and Installation of the Door Assembly of the Washbasin Unit

A. General

This task gives you the installation and assembly procedures of the component.

B. Procedure

WARNING: BE CAREFUL WHEN YOU USE SOLVENTS/CLEANING AGENTS, SEALANTS AND OTHER MATERIALS. OBEY THE MATERIAL MANUFACTURER'S INSTRUCTIONS AND THE LOCAL REGULATIONS. MAKE SURE THAT THERE IS A GOOD FLOW OF AIR THROUGH THE WORK AREA. DO NOT BREATHE THE FUMES. DO NOT SMOKE. DO NOT USE THESE MATERIALS NEAR A FLAME, SPARKS OR SOURCES OF HEAT. USE PROTECTIVE CLOTHING, GOGGLES AND GLOVES. IF YOU GET ONE OF THESE MATERIALS ON YOUR SKIN OR IN YOUR EYES, FLUSH IT AWAY WITH A FLOW OF CLEAN WATER. IF YOU GET ONE OF THESE MATERIALS IN YOUR MOUTH, GET IMMEDIATE MEDICAL AID. IN GENERAL, THESE MATERIALS ARE POISONOUS, FLAMMABLE AND SKIN IRRITANTS.

CAUTION: DO ALL THE WORK ON A CLEAN, SOFT SURFACE TO PREVENT DAMAGE TO THE COMPONENTS.

CAUTION: MAKE SURE THAT ALL THE PARTS ARE CLEAN BEFORE YOU ASSEMBLE THEM.

SUB TASK 25-41-51-400-108-A01
D2549010403200 D2549010404600 D2549010404800 D2549010405600
D2549010509400 D2549010510000 D2549010510200 D2549010510400
D2549010511400 D2549010512200 D2549010512600 D2549010513200

D2549010513400 D2549010600800 D2549010601000 D2549010601200
D2549010601600 D2549010601800 D2549010602000 D2549010602200
D2549010603200 D2549010604000 D2549010604600 D2549010604800
D2549010606400 D2549010607400 D2549010607800 D2549010609000
D2549010609400 D2549010610600 D2549010611600 D2549010612000
D2549020403000 D2549020412800 D2549020506200 D2549020506400
D2549020506600 D2549020506800 D2549020507200 D2549020507400
D2549020508200 D2549020512800 D2549020513600 D2549020605600
D2549020608200 D2549020609200 D2549020609400 D2549020610200
D2549020611400 D2549020612000 D2549020612200 D2549020612600
D2549020613600 D2549020700000 D2549020701000 D2549020702600
D2549020702800 D2549020703600 D2549020703800 D2549020704600
D2549020705200 D2549020705400 D2549020706800 D2549020707400
D2549020707600 D2549020708000 D2549020711200 D2549020712200
D2549020713200 D2549020801000 D2549030402000 D2549030402400
D2549030403400 D2549030403600 D2549030404400 D2549030404600
D2549030404800 D2549030405200 D2549030406400 D2549030408200
D2549030408600 D2549030409000 D2549030409400 D2549030411400
D2549030412200 D2549030412400 D2549030413400 D2549030414600
D2549030504600 D2549030505400 D2549030505600 D2549030506000
D2549030506600 D2549030507800 D2549030508400 D2549030509000
D2549030509400 D2549030510000 D2549030513000 D2549030513800
D2549030601400 D2549030601800 D2549030602200 D2549030602800
D2549030603800 D2549030604200 D2549030604400 D2549030604800
D2549030607000 D2549030607400 D2549030608200 D2549030608800
D2549030610600 D2549030611200 D2549030612800 D2549030613200
D2549030614600 D2549030700800 D2549030701800 D2549030704200
D2549030704400 D2549030704600 D2549030705600 D2549040501800
D2549040502000 R225401107-004 R225401115-000 R225401134-002 R225401134-004
R225401134-006 R225401134-008 R225401134-010 R225401134-012 R225401134-014
R225401134-016 R225401134-018 R225401134-020 R225401134-022 R225401134-024
R225401134-026 R225401134-028 R225401134-030 R225401134-032 R225401134-034
R225401134-036 R225401134-038 R225401160-000 R225401160-002 R225401183-000
R225401183-002 R225401183-004 R225401183-006 R225401183-008 R225401196-000
R225401196-002 R225401196-034 R225401196-046 R225401196-048 R225401603-000
R225401648-000 R225401648-002 R225401648-004 R225401648-006 R225401648-
008 R225401685-000 R225401685-002 R225401803-000 R225401803-002
R225401808-000 R225401811-000 R225401814-000

1. Assembly and Installation of the Door Assembly of the Washbasin Unit (16B-1)

   (a) Attach the lock insert or the catch 16B-170 with the screws 16B-180 and the washers 16B-140 to the angle 16B-150.

   (b) Attach the sealing section 16B-160 and the angle 16B-150 with the screws 16B-120 and the washers 16B-130 to the lavatory structure.

(c) Assemble the mounting angle assembly 16B-100 as follows:

1 Attach the bushing 16B-110 to the mounting angle 16B-105.

(d) Attach the mounting angle assembly 16B-100 with the screws 16B-120, the washers 16B-190 and the nuts 16B-200.

(e) Assemble the mounting angle assembly 16B-080 as follows:

1 Attach the bushing 16B-090 to the mounting angle 16B-085.

(f) Attach the mounting angle assembly 16B-080 with the screws 16B-120 and the washers 16B-130.

(g) Install and assemble the washbasin-unit door assembly 16B-010 as follows:

1 Attach the latch assembly 16B-060 and the mounting plate 16B-040 with the screws 16B-050 to the washbasin-unit door assembly 16B-010.

2 Attach the attach pins 16B-020, 16B-030 to the washbasin-unit door assembly 16B-010.

3 Attach the washbasin-unit door assembly 16B-010 with the attach pins 16B-020, 16B-030 to the mounting angle assemblies 16B-080, 16B-100.

SUB TASK 25-41-51-400-108-B01

D2549010400000 D2549010400400 D2549010401800 D2549010402400
D2549010404000 D2549010404200 D2549010509600 D2549010509800
D2549010510800 D2549010511000 D2549010511600 D2549010511800
D2549010512000 D2549010512400 D2549010513000 D2549010513600
D2549010513800 D2549010514000 D2549010514200 D2549010514600
D2549010514800 D2549010600000 D2549010600200 D2549010600400
D2549010600600 D2549010601400 D2549010602400 D2549010602600
D2549010602800 D2549010603800 D2549010604200 D2549010604400
D2549010605000 D2549010605600 D2549010606000 D2549010606600
D2549010606800 D2549010607000 D2549010607200 D2549010608600
D2549010608800 D2549010609200 D2549010609600 D2549010610000
D2549010610200 D2549010611400 D2549010612200 D2549010612400
D2549010613000 D2549010613200 D2549010613600 D2549010614400
D2549010614800 D2549020301000 D2549020402200 D2549020402400
D2549020403400 D2549020404200 D2549020406600 D2549020406800
D2549020408600 D2549020408800 D2549020409000 D2549020410600
D2549020410800 D2549020411000 D2549020411800 D2549020412200
D2549020413000 D2549020413600 D2549020414000 D2549020505600
D2549020507000 D2549020507600 D2549020507800 D2549020508400
D2549020508600 D2549020508800 D2549020509000 D2549020509200

D2549020509600 D2549020510400 D2549020511200 D2549020512000
D2549020513200 D2549020513400 D2549020513800 D2549020514000
D2549020514800 D2549020604200 D2549020604400 D2549020605000
D2549020605200 D2549020605800 D2549020606000 D2549020607000
D2549020607800 D2549020608400 D2549020608600 D2549020608800
D2549020609800 D2549020610000 D2549020610400 D2549020610600
D2549020611000 D2549020611200 D2549020611600 D2549020611800
D2549020612400 D2549020612800 D2549020613000 D2549020614000
D2549020614400 D2549020614600 D2549020614800 D2549020700200
D2549020700800 D2549020701600 D2549020701800 D2549020702000
D2549020702400 D2549020703200 D2549020703400 D2549020704000
D2549020704200 D2549020704400 D2549020704800 D2549020705000
D2549020705600 D2549020706400 D2549020707000 D2549020707200
D2549020708200 D2549020708400 D2549020708600 D2549020709200
D2549020709400 D2549020709600 D2549020709800 D2549020710200
D2549020710400 D2549020710600 D2549020711000 D2549020711400
D2549020713400 D2549020713800 D2549020714000 D2549020714400
D2549020800000 D2549020800600 D2549020801400 D2549020801600
D2549020801800 D2549020802200 D2549020803600 D2549020804000
D2549020804200 D2549020804800 D2549020805000 D2549020805400
D2549020805800 D2549020806000 D2549020807000 D2549020808600
D2549020809800 D2549020810200 D2549020810600 D2549020811800
D2549020812600 D2549020813000 D2549020813800 D2549020814000
D2549030400000 D2549030400200 D2549030400400 D2549030401200
D2549030401400 D2549030401600 D2549030402600 D2549030402800
D2549030403000 D2549030403800 D2549030404000 D2549030404200
D2549030405600 D2549030405800 D2549030406000 D2549030406800
D2549030407000 D2549030407600 D2549030407800 D2549030408000
D2549030408400 D2549030409200 D2549030411200 D2549030411600
D2549030411800 D2549030412000 D2549030414000 D2549030414800
D2549030503800 D2549030504000 D2549030504200 D2549030504800
D2549030505200 D2549030505800 D2549030506400 D2549030506800
D2549030507000 D2549030507600 D2549030508000 D2549030508200
D2549030508800 D2549030509200 D2549030509600 D2549030509800
D2549030510400 D2549030510600 D2549030510800 D2549030511000
D2549030511200 D2549030511400 D2549030511600 D2549030511800
D2549030512000 D2549030512200 D2549030512400 D2549030512800
D2549030513200 D2549030513400 D2549030513600 D2549030514000
D2549030514400 D2549030514600 D2549030514800 D2549030600000
D2549030600200 D2549030600400 D2549030601200 D2549030602000
D2549030602400 D2549030603000 D2549030603200 D2549030603400
D2549030604600 D2549030605000 D2549030605200 D2549030605400
D2549030605600 D2549030606200 D2549030606400 D2549030606800
D2549030607200 D2549030607600 D2549030608000 D2549030608600
D2549030609000 D2549030609200 D2549030609800 D2549030610000
D2549030610400 D2549030611000 D2549030611400 D2549030611600
D2549030612000 D2549030612400 D2549030613600 D2549030613800

D2549030614000 D2549030614200 D2549030614400 D2549030614800 D2549030700000 D2549030700200 D2549030702200 D2549030703200 D2549030703600 D2549040500200 R225401136-000 R225401136-006 R225401136-008 R225401136-010 R225401136-012 R225401136-014 R225401136-016 R225401136-020 R225401136-022 R225401136-024 R225401137-000 R225401137-002 R225401137-004 R225401137-006 R225401137-008 R225401137-010 R225401137-012 R225401137-014 R225401137-016 R225401142-000 R225401142-002 R225401145-002 R225401145-004 R225401145-006 R225401145-008 R225401145-012 R225401145-014 R225401152-000 R225401152-002 R225401152-004 R225401152-006 R225401152-008 R225401153-000 R225401159-000 R225401172-000 R225401172-002 R225401172-004 R225401172-006 R225401172-008 R225401172-010 R225401172-012 R225401172-014 R225401172-016 R225401172-018 R225401175-000 R225401175-002 R225401176-000 R225401195-000 R225401196-004 R225401196-006 R225401196-008 R225401196-010 R225401196-012 R225401196-014 R225401196-022 R225401196-036 R225401196-038 R225401196-040 R225401196-044 R225401196-050 R225401196-052 R225401196-054 R225401196-056 R225401196-058 R225401196-060 R225401196-068 R225401199-000 R225401199-004 R225401199-008 R225401600-000 R225401600-002 R225401600-004 R225401609-000 R225401611-006 R225401611-010 R225401611-012 R225401613-000 R225401614-000 R225401618-000 R225401618-002 R225401622-000 R225401622-002 R225401625-000 R225401646-002 R225401647-000 R225401656-000 R225401662-000 R225401671-000 R225401688-000 R225401697-000

2. Assembly and Installation of the Door Assembly of the Washbasin Unit (16B-1)

   (a) Attach the lock insert or the catch 16B-170 with the screws 16B-180 and the washers 16B-140 to the angle 16B-150.

   (b) Attach the sealing section 16B-160 and the angle 16B-150 with the screws 16B-120 and the washers 16B-130 to the lavatory structure.

   (c) Assemble the mounting angle assembly 16B-100 as follows:

      1 Attach the bushing 16B-110 to the mounting angle 16B-105.

   (d) Attach the mounting angle assembly 16B-100 with the screws 16B-120, 16B-124, the washers 16B-190 and the nuts 16B-200.

   (e) Assemble the mounting angle assembly 16B-080 as follows:

      1 Attach the bushing 16B-090 to the mounting angle 16B-085.

   (f) Attach the mounting angle assembly 16B-080 with the screws 16B-120, 16B-125 and the washers 16B-130.

   (g) Install and assemble the washbasin-unit door assembly 16B-010 as follows:

1 Attach the latch assembly 16B-060 with the screws 16B-050 to the washbasin-unit door assembly 16B-010.

2 Attach the attach pins 16B-020, 16B-030 to the washbasin-unit door assembly 16B-010.

3 Attach the washbasin-unit door assembly 16B-010 with the attach pins 16B-020, 16B-030 to the mounting angle assemblies 16B-080, 16B-100.

TASK 25-41-51-400-810-D01

D2547160900200 D2547160900400 D2549010400200 D2549010400600 D2549010400800
D2549010401000 D2549010401400 D2549010402000 D2549010402800 D2549010403400
D2549010403800 D2549010404400 D2549010405000 D2549010405200 D2549010405400
D2549010405800 D2549010406200 D2549010407000 D2549010510600 D2549010514400
D2549010603000 D2549010603400 D2549010603600 D2549010605200 D2549010605800
D2549010607600 D2549010608200 D2549010608400 D2549010609800 D2549010610400
D2549010611000 D2549010611200 D2549010612600 D2549010613400 D2549010613800
D2549010614200 D2549010614600 D2549020300400 D2549020300800 D2549020301800
D2549020400200 D2549020400400 D2549020400600 D2549020400800 D2549020401000
D2549020402000 D2549020403200 D2549020403600 D2549020403800 D2549020404400
D2549020404600 D2549020405200 D2549020405400 D2549020405600 D2549020406000
D2549020406400 D2549020407400 D2549020408000 D2549020409200 D2549020409400
D2549020409600 D2549020410400 D2549020411400 D2549020412000 D2549020412400
D2549020413200 D2549020414600 D2549020502200 D2549020508000 D2549020509800
D2549020510000 D2549020510800 D2549020511000 D2549020511600 D2549020511800
D2549020512200 D2549020512400 D2549020512600 D2549020513000 D2549020514200
D2549020514400 D2549020514600 D2549020602200 D2549020604600 D2549020604800
D2549020605400 D2549020606800 D2549020607400 D2549020607600 D2549020609000
D2549020609600 D2549020610800 D2549020613200 D2549020613800 D2549020700400
D2549020700600 D2549020701200 D2549020701400 D2549020702200 D2549020705800
D2549020706000 D2549020706200 D2549020706600 D2549020707800 D2549020708800
D2549020709000 D2549020710000 D2549020710800 D2549020711600 D2549020712400
D2549020712800 D2549020713000 D2549020713600 D2549020714600 D2549020800200
D2549020800400 D2549020800800 D2549020801200 D2549020802000 D2549020802400
D2549020802600 D2549020803000 D2549020803200 D2549020803400 D2549020803800
D2549020804400 D2549020805600 D2549020806200 D2549020806400 D2549020806600
D2549020806800 D2549020807400 D2549020807600 D2549020807800 D2549020808400
D2549020808800 D2549020809000 D2549020809400 D2549020810400 D2549020811600
D2549020812000 D2549020812400 D2549020813200 D2549020813400 D2549020813600
D2549020814400 D2549020814600 D2549020814800 D2549030402200 D2549030405400
D2549030407200 D2549030410000 D2549030410600 D2549030414400 D2549030506200
D2549030507200 D2549030507400 D2549030508600 D2549030510200 D2549030514200
D2549030600600 D2549030600800 D2549030601000 D2549030601600 D2549030602600
D2549030603600 D2549030605800 D2549030606600 D2549030607800 D2549030611800
D2549030612200 D2549030612600 D2549030613400 R225401168-000 R225401168-002
R225401168-004 R225401168-006 R225401168-008 R225401168-010 R225401168-012
R225401168-014 R225401168-016 R225401168-018 R225401168-020 R225401168-022
R225401168-024 R225401168-026 R225401168-028 R225401192-000 R225401192-002
R225401199-006 R225401602-000 R225401605-000 R225401605-002 R225401619-000
R225401619-002 R225401629-000 R225401629-002 R225401639-000 R225401639-002
R225401643-000 R225401643-002 R225401643-004 R225401643-006 R225401643-008
R225401649-000 R225401658-000 R225401693-000

78. Assembly and Installation of the Door Assembly of the Washbasin Unit

A. General

This task gives you the installation and assembly procedures of the component.

B. Procedure

WARNING: **BE CAREFUL WHEN YOU USE SOLVENTS/CLEANING AGENTS, SEALANTS AND OTHER MATERIALS. OBEY THE MATERIAL MANUFACTURER'S INSTRUCTIONS AND THE LOCAL REGULATIONS. MAKE SURE THAT THERE IS A GOOD FLOW OF AIR THROUGH THE WORK AREA. DO NOT BREATHE THE FUMES. DO NOT SMOKE. DO NOT USE THESE MATERIALS NEAR A FLAME, SPARKS OR SOURCES OF HEAT. USE PROTECTIVE CLOTHING, GOGGLES AND GLOVES. IF YOU GET ONE OF THESE MATERIALS ON YOUR SKIN OR IN YOUR EYES, FLUSH IT AWAY WITH A FLOW OF CLEAN WATER. IF YOU GET ONE OF THESE MATERIALS IN YOUR MOUTH, GET IMMEDIATE MEDICAL AID. IN GENERAL, THESE MATERIALS ARE POISONOUS, FLAMMABLE AND SKIN IRRITANTS.**

CAUTION: **DO ALL THE WORK ON A CLEAN, SOFT SURFACE TO PREVENT DAMAGE TO THE COMPONENTS.**

CAUTION: **MAKE SURE THAT ALL THE PARTS ARE CLEAN BEFORE YOU ASSEMBLE THEM.**

SUB TASK 25-41-51-400-109-A01

1. Assembly and Installation of the Door Assembly of the Washbasin Unit (16C-1)

   (a) Attach the catch 16C-160 with the screws 16C-170 and the washers 16C-130 to the angle 16C-140.

   (b) Attach the sealing section 16C-150 and the angle 16C-140 with the screws 16C-110 and the washers 16C-120 to the lavatory structure.

   (c) Assemble the mounting angle assembly 16C-090 as follows:

      1 Attach the bushing 16C-100 to the mounting angle 16C-095.

   (d) Attach the mounting angle assembly 16C-090 with the screws 16C-110, the washers 16C-180 and the nuts 16C-190.

   (e) Assemble the mounting angle assembly 16C-070 as follows:

      1 Attach the bushing 16C-080 to the mounting angle 16C-075.

   (f) Attach the mounting angle assembly 16C-070 with the screws 16C-110 and the washers 16C-120.

(g) Install and assemble the washbasin-unit door assembly 16C-010 as follows:

1 Attach the latch assembly 16C-050 with the screws 16C-040 to the washbasin-unit door assembly 16C-010.

2 Attach the attach pins 16C-020, 16C-030 to the washbasin-unit door assembly 16C-010.

3 Attach the washbasin-unit door assembly 16C-010 with the attach pins 16C-020, 16C-030 to the mounting angle assemblies 16C-070, 16C-090.

TASK 25-41-51-400-810-E01
D2549020401400 D2549020510600 D2549020802800 D2549020805200 D2549030410800 D2549030414200 D2549030701600 D2549030702000 D2549030703000 D2549030704000 R225401627-000

79. Assembly and Installation of the Door Assembly of the Washbasin Unit

A. General

This task gives you the installation and assembly procedures of the component.

B. Procedure

WARNING: BE CAREFUL WHEN YOU USE SOLVENTS/CLEANING AGENTS, SEALANTS AND OTHER MATERIALS. OBEY THE MATERIAL MANUFACTURER'S INSTRUCTIONS AND THE LOCAL REGULATIONS. MAKE SURE THAT THERE IS A GOOD FLOW OF AIR THROUGH THE WORK AREA. DO NOT BREATHE THE FUMES. DO NOT SMOKE. DO NOT USE THESE MATERIALS NEAR A FLAME, SPARKS OR SOURCES OF HEAT. USE PROTECTIVE CLOTHING, GOGGLES AND GLOVES. IF YOU GET ONE OF THESE MATERIALS ON YOUR SKIN OR IN YOUR EYES, FLUSH IT AWAY WITH A FLOW OF CLEAN WATER. IF YOU GET ONE OF THESE MATERIALS IN YOUR MOUTH, GET IMMEDIATE MEDICAL AID. IN GENERAL, THESE MATERIALS ARE POISONOUS, FLAMMABLE AND SKIN IRRITANTS.

CAUTION: DO ALL THE WORK ON A CLEAN, SOFT SURFACE TO PREVENT DAMAGE TO THE COMPONENTS.

CAUTION: MAKE SURE THAT ALL THE PARTS ARE CLEAN BEFORE YOU ASSEMBLE THEM.

SUB TASK 25-41-51-400-110-A01

1. Assembly and Installation of the Door Assembly of the Washbasin Unit (16D-1)

(a) Attach the catch 16D-160 with the screws 16D-170 and the washers 16D-130 to the angle 16D-140.

(b) Attach the sealing section 16D-150 and the angle 16D-140 with the screws 16D-110 and the washers 16D-120 to the lavatory structure.

(c) Assemble the mounting angle assembly 16D-090 as follows:

1 Attach the bushing 16D-100 to the mounting angle 16D-095.

(d) Attach the mounting angle assembly 16D-090 with the screws 16D-110, the washers 16D-180 and the nuts 16D-190.

(e) Assemble the mounting angle assembly 16D-070 as follows:

1 Attach the bushing 16D-080 to the mounting angle 16D-075.

(f) Attach the mounting angle assembly 16D-070 with the screws 16D-110 and the washers 16D-120.

(g) Install and assemble the washbasin-unit door assembly 16D-010 as follows:

1 Attach the latch assembly 16D-050 with the screws 16D-040 to the washbasin-unit door assembly 16D-010.

2 Attach the attach pins 16D-020, 16D-030 to the washbasin-unit door assembly 16D-010.

3 Attach the washbasin-unit door assembly 16D-010 with the attach pins 16D-020, 16D-030 to the mounting angle assemblies 16D-070, 16D-090.

TASK 25-41-51-400-810-F01

D2549010401600 D2549010402200 D2549010402600 D2549010403000 D2549010403600
D2549010406000 D2549010406400 D2549010406800 D2549010610800 D2549010611800
D2549020300000 D2549020300600 D2549020301600 D2549020302000 D2549020302800
D2549020400000 D2549020401200 D2549020401600 D2549020402600 D2549020404000
D2549020404800 D2549020405000 D2549020405800 D2549020406200 D2549020407000
D2549020407200 D2549020407600 D2549020407800 D2549020408200 D2549020409800
D2549020410200 D2549020411200 D2549020411600 D2549020412600 D2549020413400
D2549020413800 D2549020414200 D2549020414800 D2549020807200 D2549020808200
D2549020809600 D2549020810000 D2549020810800 D2549020811200 D2549020811400
D2549020812200 D2549020812800 D2549020814200 D2549030400600 D2549030401000
D2549030401800 D2549030405000 D2549030406600 D2549030407400 D2549030409600
D2549030409800 D2549030410200 D2549030410400 D2549030412600 D2549030412800
D2549030413000 D2549030413200 D2549030413600 D2549030606000 D2549030608400
D2549030700400 D2549030700600 D2549030701000 D2549030701400 D2549030702400
D2549030702600 D2549030702800 D2549030703400 D2549030703800 D2549030704800
D2549030705200 D2549040500400 D2549040500600 D2549040500800 D2549040501000
D2549040501200 D2549040501400 D2549040501600 R225401136-004 R225401136-018
R225401145-010 R225401152-010 R225401196-016 R225401196-018 R225401196-020
R225401196-024 R225401196-042 R225401196-062 R225401196-064 R225401196-066
R225401196-070 R225401199-002 R225401199-010 R225401199-012 R225401611-000
R225401611-008 R225401611-014 R225401611-016 R225401611-018 R225401611-020
R225401624-000 R225401627-002 R225401627-004 R225401646-000 R225401656-002
R225401662-002 R225401671-002 R225401673-000 R225401673-002 R225401673-004
R225401673-006 R225401675-000 R225401676-000 R225401683-000 R225401689-004
R225401689-006 R225401691-000 R225401691-002 R225401697-002

80. Assembly and Installation of the Door Assembly of the Washbasin Unit

A. General

This task gives you the installation and assembly procedures of the component.

B. Procedure

WARNING: **BE CAREFUL WHEN YOU USE SOLVENTS/CLEANING AGENTS, SEALANTS AND OTHER MATERIALS. OBEY THE MATERIAL MANUFACTURER'S INSTRUCTIONS AND THE LOCAL REGULATIONS. MAKE SURE THAT THERE IS A GOOD FLOW OF AIR THROUGH THE WORK AREA. DO NOT BREATHE THE FUMES. DO NOT SMOKE. DO NOT USE THESE MATERIALS NEAR A FLAME, SPARKS OR SOURCES OF HEAT. USE PROTECTIVE CLOTHING, GOGGLES AND GLOVES. IF YOU GET ONE OF THESE MATERIALS ON YOUR SKIN OR IN YOUR EYES, FLUSH IT AWAY WITH A FLOW OF CLEAN WATER. IF YOU GET ONE OF THESE MATERIALS IN YOUR MOUTH, GET IMMEDIATE MEDICAL AID. IN GENERAL, THESE MATERIALS ARE POISONOUS, FLAMMABLE AND SKIN IRRITANTS.**

CAUTION: **DO ALL THE WORK ON A CLEAN, SOFT SURFACE TO PREVENT DAMAGE TO THE COMPONENTS.**

CAUTION: **MAKE SURE THAT ALL THE PARTS ARE CLEAN BEFORE YOU ASSEMBLE THEM.**

SUB TASK 25-41-51-400-111-A01

1. Assembly and Installation of the Door Assembly of the Washbasin Unit (16E-1)

   (a) Attach the catch 16E-170 with the screws 16E-180 and the washers 16E-140 to the angle 16E-150.

   (b) Attach the sealing section 16E-160 and the angle 16E-150 with the screws 16E-210, the washers 16E-130 and the nuts 16E-200 to the lavatory structure.

   (c) Attach the sealing section 16E-160 and the angle 16E-150 with the screws 16E-120 and the washers 16E-130 to the lavatory structure.

   (d) Assemble the mounting angle assembly 16E-100 as follows:

      1 Attach the bushing 16E-110 to the mounting angle 16E-105.

   (e) Attach the mounting angle assembly 16E-100 with the screws 16E-120, 16E-124, the washers 16E-190 and the nuts 16E-200.

   (f) Assemble the mounting angle assembly 16E-080 as follows:

      1 Attach the bushing 16E-090 and the mounting angle 16E-085.

   (g) Attach the mounting angle assembly 16E-080 with the screws 16E-120, 16E-125 and the washers 16E-130.

   (h) Install and assemble the washbasin-unit door assembly 16E-010 as follows:

      1 Attach the latch assembly 16E-060 with the screws 16E-050 to the washbasin-unit door assembly 16E-010.

      2 Attach the attach pins 16E-020, 16E-030 to the washbasin-unit door assembly 16E-010.

      3 Attach the washbasin-unit door assembly 16E-010 with the attach pins 16E-020, 16E-030 to the mounting angle assemblies 16E-080, 16E-100.

TASK 25-41-51-400-810-G01
D2549020712000 D2549020712600 D2549030610200 D2549030701200

81. Assembly and Installation of the Door Assembly of the Washbasin Unit

A. General

This task gives you the installation and assembly procedures of the component.

B. Procedure

WARNING: BE CAREFUL WHEN YOU USE SOLVENTS/CLEANING AGENTS, SEALANTS AND OTHER MATERIALS. OBEY THE MATERIAL MANUFACTURER'S INSTRUCTIONS AND THE LOCAL REGULATIONS. MAKE SURE THAT THERE IS A GOOD FLOW OF AIR THROUGH THE WORK AREA. DO NOT BREATHE THE FUMES. DO NOT SMOKE. DO NOT USE THESE MATERIALS NEAR A FLAME, SPARKS OR SOURCES OF HEAT. USE PROTECTIVE CLOTHING, GOGGLES AND GLOVES. IF YOU GET ONE OF THESE MATERIALS ON YOUR SKIN OR IN YOUR EYES, FLUSH IT AWAY WITH A FLOW OF CLEAN WATER. IF YOU GET ONE OF THESE MATERIALS IN YOUR MOUTH, GET IMMEDIATE MEDICAL AID. IN GENERAL, THESE MATERIALS ARE POISONOUS, FLAMMABLE AND SKIN IRRITANTS.

CAUTION: DO ALL THE WORK ON A CLEAN, SOFT SURFACE TO PREVENT DAMAGE TO THE COMPONENTS.

CAUTION: MAKE SURE THAT ALL THE PARTS ARE CLEAN BEFORE YOU ASSEMBLE THEM.

SUB TASK 25-41-51-400-112-A01

1. Assembly and Installation of the Door Assembly of the Washbasin Unit (16F-1)

(a) Attach the catch 16F-130 with the screws 16F-150 and the washers 16F-160 to the angle 16F-110.

(b) Attach the sealing section 16F-120 and the angle 16F-110 with the screws 16F-200, the washers 16F-170 and the nuts 16F-190 to the lavatory structure.

(c) Attach the sealing section 16F-120 and the angle 16F-110 with the screws 16F-140 and the washers 16F-170 to the lavatory structure.

(d) Attach the mounting angle 16F-100 with the screws 16F-220 and the washers 16F-180.

(e) Assemble the mounting angle assembly 16F-070 as follows:

1 Attach the bushing 16F-090 to the mounting angle 16F-080.

(f) Attach the mounting angle assembly 16F-070 with the screws 16F-210 and the washers 16F-180.

(g) Install and assemble the washbasin-unit door assembly 16F-010 as follows:

1 Attach the latch assembly 16F-050 with the screws 16F-060 to the washbasin-unit door assembly 16F-010.

2 Attach the attach pins 16F-020, 16F-030 to the washbasin-unit door assembly 16F-010.

3 Attach the washbasin-unit door assembly 16F-010 with the attach pins 16F-020, 16F-030 to the mounting angle assembly 16F-070 and to the mounting angle 16F-100.

TASK 25-41-51-400-811-A01

D2549010500000 D2549010500600 D2549010500800 D2549010501000 D2549010501200 D2549010501400 D2549010501600 D2549010501800 D2549010502000 D2549010502200 D2549010502400 D2549010502600 D2549010502800 D2549010503200 D2549010503400 D2549010503600 D2549010503800 D2549010504200 D2549010504400 D2549010504600 D2549010504800 D2549010505000 D2549010505200 D2549010505400 D2549010505600 D2549010505800 D2549010506000 D2549010506200 D2549010506400 D2549010506800 D2549010507000 D2549010507200 D2549010507400 D2549010507600 D2549010507800 D2549010508000 D2549010508200 D2549010508400 D2549010508600 D2549010508800 D2549010509200 D2549010511200 D2549020500200 D2549020500400 D2549020500800 D2549020501200 D2549020501600 D2549020501800 D2549020502000 D2549020502400 D2549020502600 D2549020503000 D2549020503400 D2549020503600 D2549020503800 D2549020504000 D2549020504200 D2549020504400 D2549020504600 D2549020505000 D2549020505400 D2549020505800 D2549020600000 D2549020600200 D2549020600400 D2549020600800 D2549020601000 D2549020601200 D2549020601400 D2549020601600 D2549020601800 D2549020602000 D2549020602400 D2549020602600 D2549020602800 D2549020603000 D2549020603200 D2549020603400 D2549020603800 D2549020606400 D2549020606600 D2549020607200 D2549030500200 D2549030500400 D2549030500600 D2549030500800 D2549030501000 D2549030501200 D2549030501400 D2549030501600 D2549030502000 D2549030502200 D2549030502600 D2549030502800 D2549030503000 D2549030503200 D2549030503400 D2549030503600 R225401107-000 R225401107-002 R225401115-002 R225401128-000 R225401133-000 R225401134-000 R225401139-000 R225401145-000 R225401146-000 R225401146-002 R225401188-000 R225401188-002 R225401188-004 R225401188-006

82. Assembly and Installation of the Washbasin Unit

A. General

This task gives you the installation and assembly procedures of the component.

B. Job Set-up Information

(1) Not applicable

C. Procedure

WARNING: **BE CAREFUL WHEN YOU USE SOLVENTS/CLEANING AGENTS, SEALANTS AND OTHER MATERIALS. OBEY THE MATERIAL MANUFACTURER'S INSTRUCTIONS AND THE LOCAL REGULATIONS. MAKE SURE THAT THERE IS A GOOD FLOW OF AIR THROUGH THE WORK AREA. DO NOT BREATHE THE FUMES. DO NOT SMOKE. DO NOT USE THESE MATERIALS NEAR A FLAME, SPARKS OR SOURCES OF HEAT. USE PROTECTIVE CLOTHING, GOGGLES AND GLOVES. IF YOU GET ONE OF THESE MATERIALS ON YOUR SKIN OR IN YOUR EYES, FLUSH IT AWAY WITH A FLOW OF CLEAN WATER. IF YOU GET ONE OF THESE MATERIALS IN YOUR MOUTH, GET IMMEDIATE MEDICAL AID. IN GENERAL, THESE MATERIALS ARE POISONOUS, FLAMMABLE AND SKIN IRRITANTS.**

CAUTION: **DO ALL THE WORK ON A CLEAN, SOFT SURFACE TO PREVENT DAMAGE TO THE COMPONENTS.**

CAUTION: **MAKE SURE THAT ALL THE PARTS ARE CLEAN BEFORE YOU ASSEMBLE THEM.**

SUB TASK 25-41-51-440-081-A01
D2549020602800 D2549020603200 D2549030502600 D2549030503400 R225401134-000 R225401188-006

1. Assembly and Installation of the Washbasin Unit (15-1)

   (a) Attach the bracket 15-040 with the screws 15-020 and the washers 15-030 to the lavatory structure.

   (b) Assemble the washbasin assembly 15-080 as follows:

      1 Assemble the flap assembly 15-110 as follows:
      a

         WARNING: **BE VERY CAREFUL WHEN YOU REMOVE OR INSTALL THE SPRING. BECAUSE THERE IS REMAINING TENSION IN THE SPRING, IT CAN CAUSE YOU INJURY.**

         Attach the flap 15-120 and the springs 15-150 with the pins 15-130 and the splints 15-140.

      2 Attach the flap assembly 15-110 with the screws 15-160, the washers 15-170 and the nuts 15-180 to the washbasin 15-100.

   (c) Attach the rear cover 15-090 and the washbasin assembly 15-080 with the screws 15-020 and the washers 15-035 to the lavatory structure.

(d) Attach the washbasin assembly 15-080 with the screw 15-050, the washer 15-035 and the nut 15-060 to the bracket 15-040.

(e) Attach the ground cable in accordance with the Process and Material Specification PMS 01-04-58 to the washbasin assembly 15-080.

SUB TASK 25-41-51-440-081-B01

D2549010500000 D2549010500600 D2549010500800 D2549010501000 D2549010501200 D2549010501400 D2549010501600 D2549010501800 D2549010502000 D2549010502200 D2549010502600 D2549010502800 D2549010503200 D2549010503400 D2549010503600 D2549010503800 D2549010504200 D2549010504400 D2549010504600 D2549010504800 D2549010505000 D2549010505200 D2549010505400 D2549010505800 D2549010506000 D2549010506200 D2549010506400 D2549010506800 D2549010507000 D2549010507200 D2549010507400 D2549010507600 D2549010508000 D2549010508200 D2549010508400 D2549010508600 D2549010508800 D2549010509200 D2549010511200 D2549020500200 D2549020500400 D2549020500800 D2549020501200 D2549020501600 D2549020501800 D2549020502000 D2549020502400 D2549020502600 D2549020503000 D2549020503400 D2549020503600 D2549020503800 D2549020504000 D2549020504200 D2549020504400 D2549020504600 D2549020505000 D2549020505400 D2549020505800 D2549020600000 D2549020600200 D2549020600800 D2549020601000 D2549020601200 D2549020601400 D2549020601600 D2549020601800 D2549020602000 D2549020602400 D2549020602600 D2549020603400 D2549020603800 D2549020606400 D2549020606600 D2549020607200 D2549030500200 D2549030500400 D2549030500600 D2549030500800 D2549030501000 D2549030501200 D2549030501400 D2549030501600 D2549030502000 D2549030502200 D2549030502800 D2549030503000 D2549030503200 D2549030503600 R225401107-000 R225401107-002 R225401115-002 R225401133-000 R225401139-000 R225401145-000 R225401146-000 R225401146-002 R225401188-000 R225401188-002 R225401188-004

2. Assembly and Installation of the Washbasin Unit (15-1)

(a) Attach the bracket 15-040 with the screws 15-020 and the washers 15-030 to the lavatory structure.

(b) Assemble the washbasin assembly 15-080 as follows:

1 Assemble the flap assembly 15-110 as follows:

a

WARNING: BE VERY CAREFUL WHEN YOU REMOVE OR INSTALL THE SPRING. BECAUSE THERE IS REMAINING TENSION IN THE SPRING, IT CAN CAUSE YOU INJURY.

Attach the flap 15-120 and the springs 15-150 with the pins 15-130 and the splints 15-140.

2 Attach the flap assembly 15-110 with the screws 15-160, the washers 15-170 and the nuts 15-180 to the washbasin 15-100.

(c) Attach the rear cover 15-090 and the washbasin assembly 15-080 with the screws 15-020 and the washers 15-035 to the lavatory structure.

(d) Attach the damper 15-082 with the lock pins 15-088, the bolts 15-084 and the washers 15-086.

(e) Attach the washbasin assembly 15-080 with the screw 15-050, the washer 15-035 and the nut 15-060 to the bracket 15-040.

(f) Attach the ground cable in accordance with the Process and Material Specification PMS 01-04-58 to the washbasin assembly 15-080.

(g) Attach the liquid soap dispenser 15-070 to the washbasin 15-100.

NOTE: For further instructions, see CMMV 25-40-01_120C2 (liquid soap dispenser).

SUB TASK 25-41-51-440-081-C01
D2549010502400 D2549010505600 D2549010507800 D2549020600400 D2549020603000 R225401128-000

3. Assembly and Installation of the Washbasin Unit (15-1)

(a) Attach the bracket 15-040 with the screws 15-020 and the washers 15-030 to the lavatory structure.

(b) Assemble the retrofitted washbasin 15-080 as follows:

1 Assemble the flap assembly 15-110 as follows:

a

WARNING: BE VERY CAREFUL WHEN YOU REMOVE OR INSTALL THE SPRING. BECAUSE THERE IS REMAINING TENSION IN THE SPRING, IT CAN CAUSE YOU INJURY.

Attach the flap 15-120 and the springs 15-150 with the pins 15-130 and the splints 15-140.

2 Attach the flap assembly 15-110 with the screws 15-160, the washers 15-170 and the nuts 15-180 to the washbasin 15-100.

(c) Attach the cover cap 15-190 with the screw 15-200 and the washer 15-210 to the rear cover 15-090.

(d) Attach the rear cover 15-090 and the retrofitted washbasin 15-080 with the screws 15-020 and the washers 15-035 to the lavatory structure.

(e) Attach the retrofitted washbasin 15-080 with the screw 15-050, the washer 15-035 and the nut 15-060 to the bracket 15-040.

(f) Attach the ground cable in accordance with the Process and Material Specification PMS 01-04-58 to the retrofitted washbasin 15-080.

(g) Attach the liquid soap dispenser 15-070 to the washbasin 15-100.

NOTE: For further instructions, see CMMV 25-40-01_120C2 (liquid soap dispenser).

TASK 25-41-51-400-811-B01
D2549010500400 D2549020500000 D2549020500600 D2549020501000 D2549020501400 D2549020502800 D2549020503200 D2549020504800 D2549020505200 D2549020506000 D2549030501800 D2549030502400

83. Assembly and Installation of the Washbasin Unit

A. General

This task gives you the installation and assembly procedures of the component.

B. Job Set-up Information

(1) Not applicable

C. Procedure

WARNING: BE CAREFUL WHEN YOU USE SOLVENTS/CLEANING AGENTS, SEALANTS AND OTHER MATERIALS. OBEY THE MATERIAL MANUFACTURER'S INSTRUCTIONS AND THE LOCAL REGULATIONS. MAKE SURE THAT THERE IS A GOOD FLOW OF AIR THROUGH THE WORK AREA. DO NOT BREATHE THE FUMES. DO NOT SMOKE. DO NOT USE THESE MATERIALS NEAR A FLAME, SPARKS OR SOURCES OF HEAT. USE PROTECTIVE CLOTHING, GOGGLES AND GLOVES. IF YOU GET ONE OF THESE MATERIALS ON YOUR SKIN OR IN YOUR EYES, FLUSH IT AWAY WITH A FLOW OF CLEAN WATER. IF YOU GET ONE OF THESE MATERIALS IN YOUR MOUTH, GET IMMEDIATE MEDICAL AID. IN GENERAL, THESE MATERIALS ARE POISONOUS, FLAMMABLE AND SKIN IRRITANTS.

CAUTION: DO ALL THE WORK ON A CLEAN, SOFT SURFACE TO PREVENT DAMAGE TO THE COMPONENTS.

CAUTION: MAKE SURE THAT ALL THE PARTS ARE CLEAN BEFORE YOU ASSEMBLE THEM.

SUB TASK 25-41-51-440-082-A01

1. Assembly and Installation of the Washbasin Unit (15A-1)

(a) Attach the bracket 15A-040 with the screws 15A-020 and the washers 15A-030 to the lavatory structure.

(b) Assemble the washbasin assembly 15A-090 as follows:

1 Assemble the flap assembly 15A-120 as follows:

a

WARNING: BE VERY CAREFUL WHEN YOU REMOVE OR INSTALL THE SPRING. BECAUSE THERE IS REMAINING TENSION IN THE SPRING, IT CAN CAUSE YOU INJURY.

Attach the flap 15A-130 and the springs 15A-160 with the pins 15A-140 and the splints 15A-150.

2 Attach the flap assembly 15A-120 with the screws 15A-170, the washers 15A-180 and the nuts 15A-190 to the washbasin 15A-110.

(c) Attach the rear cover 15A-100 and the washbasin assembly 15A-090 with the screws 15A-020 and the washers 15A-035 to the lavatory structure.

(d) Attach the washbasin assembly 15A-090 with the screw 15A-050, the washer 15A-035 and the nut 15A-060 to the bracket 15A-040.

(e) Attach the ground cable in accordance with the Process and Material Specification PMS 01-04-58 to the washbasin assembly 15A-090.

(f) Attach liquid soap dispenser 15A-080 to the liquid soap dispenser support 15A-070.

(g) Attach the liquid soap dispenser 15A-080 and the liquid soap dispenser support 15A-070 to the washbasin 15A-110.

TASK 25-41-51-400-811-C01
D2549020603600 D2549020604000

84. Assembly and Installation of the Washbasin Unit

A. General

This task gives you the installation and assembly procedures of the component.

B. Job Set-up Information

(1) Not applicable

C. Procedure

WARNING: BE CAREFUL WHEN YOU USE SOLVENTS/CLEANING AGENTS, SEALANTS AND OTHER MATERIALS. OBEY THE MATERIAL MANUFACTURER'S INSTRUCTIONS AND THE LOCAL REGULATIONS. MAKE SURE THAT THERE IS A GOOD FLOW OF AIR THROUGH THE WORK AREA. DO NOT BREATHE THE FUMES. DO NOT SMOKE. DO NOT USE THESE MATERIALS NEAR A FLAME, SPARKS OR SOURCES OF HEAT. USE PROTECTIVE CLOTHING, GOGGLES AND GLOVES. IF YOU GET ONE OF THESE MATERIALS ON YOUR SKIN OR IN YOUR EYES, FLUSH IT AWAY WITH A FLOW OF CLEAN WATER. IF YOU GET ONE OF THESE MATERIALS IN YOUR MOUTH, GET IMMEDIATE MEDICAL AID. IN GENERAL, THESE MATERIALS ARE POISONOUS, FLAMMABLE AND SKIN IRRITANTS.

CAUTION: DO ALL THE WORK ON A CLEAN, SOFT SURFACE TO PREVENT DAMAGE TO THE COMPONENTS.

CAUTION: MAKE SURE THAT ALL THE PARTS ARE CLEAN BEFORE YOU ASSEMBLE THEM.

SUB TASK 25-41-51-440-083-A01

1. Assembly and Installation of the Washbasin Unit (15B-1), (18-1)

(a) Attach the washbasin unit bracket 15B-150 with the screws 15B-180 and the washers 15B-190 to the lavatory structure.

(b) Assemble the washbasin assembly 15B-010 as follows:

1 Assemble the waste flap assembly 15B-015 as follows:
a Assemble the hinge assembly 15B-035 as follows:

WARNING: **BE VERY CAREFUL WHEN YOU REMOVE OR INSTALL THE SPRING. BECAUSE THERE IS REMAINING TENSION IN THE SPRING, IT CAN CAUSE YOU INJURY.**

Attach the axle 15B-050 and the springs 15B-055 with the retaining rings 15B-060 to the flap hinge half 15B-040 and to the washbasin hinge half 15B-045.

b Attach the flap 15B-020 with the screws 15B-025 and the washers 15B-030 to the flap hinge half 15B-040.

2 Attach the waste flap assembly 15B-015 with the screws 15B-065, the washers 15B-070 and the clip nuts 15B-075.

(c) Attach the cover cap 15B-200 with the screw 15B-210 and the washer 15B-220 to the washbasin assembly 15B-010.

(d) Attach the washbasin assembly 15B-010 with the screws 15B-130 and the washers 15B-140 to the lavatory structure.

(e) Attach the washbasin assembly 15B-010 with the screws 15B-130 and the washers 15B-140 to the washbasin unit bracket 15B-150.

(f) Attach the ground cable in accordance with the Process and Material Specification PMS 01-04-58 to the washbasin assembly 15B-010.

(g) Attach the damper 15B-090 with the washers 15B-110, the bolts 15B-100 and the new lock pins 15B-120 to waste flap assembly 15B-015 and to the waste chute 18-010.

(h) Attach the liquid soap dispenser 15B-170 to the washbasin assembly 15B-010.

NOTE: **For further instructions, see CMMV 25-40-01_120C2 (liquid soap dispenser).**

TASK 25-41-51-400-811-D01

D2549010509000 D2549010509400 D2549010509600 D2549010510200 D2549010510400
D2549010510800 D2549010511000 D2549010511400 D2549010511600 D2549010511800
D2549010512200 D2549010512400 D2549010513200 D2549010513400 D2549010513600
D2549010513800 D2549010603600 D2549010605600 D2549010605800 D2549010606200
D2549010606800 D2549010607000 D2549010608200 D2549010608400 D2549010608600
D2549010610200 D2549010612200 D2549010613200 D2549020502200 D2549020505600
D2549020507800 D2549020509000 D2549020509200 D2549020511000 D2549020512200
D2549020513000 D2549020513400 D2549020514200 D2549020514600 D2549020604200
D2549020604400 D2549020604800 D2549020605200 D2549020605400 D2549020605800
D2549020606000 D2549020606800 D2549020607000 D2549020607400 D2549020607600
D2549020607800 D2549020608600 D2549020608800 D2549020609000 D2549020609200
D2549020609400 D2549020609600 D2549020609800 D2549020610000 D2549020610200
D2549020610600 D2549020610800 D2549020611000 D2549020611200 D2549020611400
D2549020611600 D2549020611800 D2549020701200 D2549020703200 D2549020705800
D2549020706200 D2549020706400 D2549020708400 D2549020710000 D2549020710800
D2549020712400 D2549020712800 D2549020713000 D2549020714000 D2549020800200
D2549020800800 D2549020801200 D2549020801400 D2549020802200 D2549020802400
D2549020804000 D2549020804200 D2549020805000 D2549020806400 D2549020807000
D2549020807600 D2549020808600 D2549020809800 D2549020810200 D2549020814000
D2549030400200 D2549030400400 D2549030401400 D2549030401600 D2549030402600
D2549030402800 D2549030403000 D2549030404800 D2549030504000 D2549030504800
D2549030505200 D2549030505600 D2549030506000 D2549030506200 D2549030506400
D2549030600200 D2549030603200 D2549030604200 D2549030604600 D2549030606000
D2549030606400 D2549030606600 D2549030606800 D2549030607200 D2549030608000
D2549030608400 D2549030609000 D2549030609800 D2549030610000 D2549030611800
D2549030612000 D2549030612200 D2549030613400 D2549030614200 D2549030614400
D2549040500200 R225401107-004 R225401137-000 R225401137-002 R225401137-010
R225401137-012 R225401137-016 R225401159-000 R225401160-002 R225401175-000
R225401176-000 R225401196-008 R225401196-044 R225401196-054 R225401199-000
R225401199-002 R225401199-004 R225401199-006 R225401199-008 R225401609-000
R225401611-008 R225401611-010 R225401614-000 R225401618-000 R225401618-002
R225401619-002 R225401622-000 R225401625-000 R225401648-000

85. Assembly and Installation of the Washbasin Unit

A. General

This task gives you the installation and assembly procedures of the component.

B. Job Set-up Information

(1) Not applicable

C. Procedure

WARNING: **BE CAREFUL WHEN YOU USE SOLVENTS/CLEANING AGENTS, SEALANTS AND OTHER MATERIALS. OBEY THE MATERIAL MANUFACTURER'S INSTRUCTIONS AND THE LOCAL REGULATIONS. MAKE SURE THAT THERE IS A GOOD FLOW OF AIR THROUGH THE WORK AREA. DO NOT BREATHE THE FUMES. DO NOT SMOKE. DO NOT USE THESE MATERIALS NEAR A FLAME, SPARKS OR SOURCES OF HEAT. USE PROTECTIVE CLOTHING, GOGGLES AND GLOVES. IF YOU GET ONE OF THESE MATERIALS ON YOUR SKIN OR IN YOUR EYES, FLUSH IT AWAY WITH A FLOW OF CLEAN WATER. IF YOU GET ONE OF THESE MATERIALS IN YOUR MOUTH, GET IMMEDIATE MEDICAL AID. IN GENERAL, THESE MATERIALS ARE POISONOUS, FLAMMABLE AND SKIN IRRITANTS.**

CAUTION: **DO ALL THE WORK ON A CLEAN, SOFT SURFACE TO PREVENT DAMAGE TO THE COMPONENTS.**

CAUTION: **MAKE SURE THAT ALL THE PARTS ARE CLEAN BEFORE YOU ASSEMBLE THEM.**

SUB TASK 25-41-51-440-084-A01

D2549010509000 D2549010509400 D2549010509600 D2549010510200 D2549010510400 D2549010510800 D2549010511000 D2549010511400 D2549010511600 D2549010512200 D2549010512400 D2549010513200 D2549010513400 D2549010513600 D2549010513800 D2549020604200 D2549020604400 D2549020604800 D2549020605200 D2549020605400 D2549020606000 D2549020606800 D2549020607000 D2549020607400 D2549020607600 D2549020607800 D2549020608600 D2549020608800 D2549020609000 D2549020609400 D2549020609600 D2549020609800 D2549020610000 D2549020610200 D2549020610600 D2549020610800 D2549020611000 D2549020611200 D2549020611400 D2549020611600 D2549020611800 D2549020701200 D2549020703200 D2549030504000 D2549030504800 D2549030505200 D2549030505600 D2549030506200 D2549030506400 R225401107-004 R225401137-000 R225401137-002 R225401137-010 R225401137-012 R225401159-000 R225401175-000 R225401176-000

1. Assembly and Installation of the Washbasin Unit (15C-1), (18-1)

   (a) Attach the washbasin unit bracket 15C-190 with the screws 15C-220 and the washers 15C-160 to the lavatory structure.

   (b) Attach the angles 15C-200 with the screws 15C-240 and the washers 15C-140 to the lavatory structure.

   (c) Assemble the washbasin assembly 15C-010 as follows:

      1 Assemble the waste flap assembly 15C-015 as follows:
      a Assemble the hinge assembly 15C-035 as follows:

WARNING: **BE VERY CAREFUL WHEN YOU REMOVE OR INSTALL THE SPRING. BECAUSE THERE IS REMAINING TENSION IN THE SPRING, IT CAN CAUSE YOU INJURY.**

Attach the axle 15C-050 and the springs 15C-055 with the retaining rings 15C-060 to the flap hinge half 15C-040 and to the washbasin hinge half 15C-045.

b Attach the flap 15C-020 with the screws 15C-025 and the washers 15C-030 to the flap hinge half 15C-040.

2 Attach the waste flap assembly 15C-015 with the screws 15C-065, the washers 15C-070 and the clip nuts 15C-075.

(d) Attach the washbasin assembly 15C-010 with the screws 15C-130 and the washers 15C-140 to the lavatory structure.

(e) Attach the washbasin assembly 15C-010 with the screws 15C-150, the washers 15C-160 and the nuts 15C-230 to the angles 15C-200.

(f) Attach the washbasin assembly 15C-010 with the screws 15C-250 and the washers 15C-160 to the washbasin unit bracket 15C-190.

(g) Attach the ground cable in accordance with the Process and Material Specification PMS 01-04-58 to the washbasin assembly 15C-010.

(h) Attach the damper 15C-090 with the washers 15C-110, the bolts 15C-100 and the new lock pins 15C-120 to waste flap assembly 15C-015 and to the waste chute 18-010.

(i) Attach the liquid soap dispenser assembly 15C-180 to the washbasin assembly 15C-010.

NOTE: **For further instructions, see CMMV 25-40-02_120C2 (liquid soap dispenser assembly).**

SUB TASK 25-41-51-440-084-B01

D2549010603600 D2549010605600 D2549010605800 D2549010606200
D2549010606800 D2549010607000 D2549010608200 D2549010608400
D2549010608600 D2549010610200 D2549010612200 D2549010613200
D2549020502200 D2549020505600 D2549020507800 D2549020509000
D2549020509200 D2549020511000 D2549020512200 D2549020513000
D2549020513400 D2549020514200 D2549020514600 D2549020605800
D2549020609200 D2549020705800 D2549020706200 D2549020706400
D2549020708400 D2549020710000 D2549020710800 D2549020712400

D2549020712800 D2549020713000 D2549020714000 D2549020800200 D2549020800800 D2549020801200 D2549020801400 D2549020802200 D2549020802400 D2549020804000 D2549020804200 D2549020805000 D2549020806400 D2549020807000 D2549020807600 D2549020808600 D2549020809800 D2549020810200 D2549020814000 D2549030400200 D2549030400400 D2549030401400 D2549030401600 D2549030402600 D2549030402800 D2549030403000 D2549030404800 D2549030506000 D2549030600200 D2549030603200 D2549030604200 D2549030604600 D2549030606000 D2549030606400 D2549030606600 D2549030606800 D2549030607200 D2549030608000 D2549030608400 D2549030609000 D2549030609800 D2549030610000 D2549030611800 D2549030612000 D2549030612200 D2549030613400 D2549030614200 D2549030614400 D2549040500200 R225401137-016 R225401160-002 R225401196-008 R225401196-044 R225401196-054 R225401199-000 R225401199-002 R225401199-004 R225401199-006 R225401199-008 R225401609-000 R225401611-008 R225401611-010 R225401614-000 R225401618-000 R225401618-002 R225401619-002 R225401622-000 R225401625-000 R225401648-000

2. Assembly and Installation of the Washbasin Unit (15C-1), (18-1)

(a) Attach the washbasin unit bracket 15C-190 with the screws 15C-220 and the washers 15C-160, 15C-165 to the lavatory structure.

(b) Attach the angles 15C-200 with the screws 15C-240 and the washers 15C-140 to the lavatory structure.

(c) Assemble the washbasin assembly 15C-010 as follows:

1 Assemble the waste flap assembly 15C-015 as follows:

a Assemble the hinge assembly 15C-035 as follows:

WARNING: BE VERY CAREFUL WHEN YOU REMOVE OR INSTALL THE SPRING. BECAUSE THERE IS REMAINING TENSION IN THE SPRING, IT CAN CAUSE YOU INJURY.

Attach the axle 15C-050 and the springs 15C-055 with the retaining rings 15C-060 to the flap hinge half 15C-040 and to the washbasin hinge half 15C-045.

b Attach the flap 15C-020 with the screws 15C-025 and the washers 15C-030 to the flap hinge half 15C-040.

2 Attach the waste flap assembly 15C-015 with the screws 15C-065, the washers 15C-070 and the clip nuts 15C-075.

(d) Attach the washbasin assembly 15C-010 with the screws 15C-130 and the washers 15C-140 to the lavatory structure.

(e) Attach the washbasin assembly 15C-010 with the screws 15C-150, the washers 15C-160 and the nuts 15C-230 to the angles 15C-200.

(f) Attach the washbasin assembly 15C-010 with the screws 15C-250 and the washers 15C-160 to the washbasin unit bracket 15C-190.

(g) Attach the ground cable in accordance with the Process and Material Specification PMS 01-04-58 to the washbasin assembly 15C-010.

(h) Attach the damper 15C-090 with the washers 15C-110, the bolts 15C-100 and the new lock pins 15C-120 to waste flap assembly 15C-015 and to the waste chute 18-010.

(i) Attach the liquid soap dispenser 15C-180 and the bracket 15C-182 with the washer 15C-184 to the washbasin assembly 15C-010.

NOTE: For further instructions, see CMMV 25-40-01_120C2 (liquid soap dispenser).

SUB TASK 25-41-51-440-084-C01
D2549010511800

3. Assembly and Installation of the Washbasin Unit (15C-1), (18-1)

(a) Attach the washbasin unit bracket 15C-190 with the screws 15C-220 and the washers 15C-160 to the lavatory structure.

(b) Attach the angles 15C-200 with the screws 15C-240 and the washers 15C-140 to the lavatory structure.

(c) Assemble the washbasin assembly 15C-010 as follows:

1 Assemble the waste flap assembly 15C-015 as follows:
a Assemble the hinge assembly 15C-035 as follows:

WARNING: BE VERY CAREFUL WHEN YOU REMOVE OR INSTALL THE SPRING. BECAUSE THERE IS REMAINING TENSION IN THE SPRING, IT CAN CAUSE YOU INJURY.

Attach the axle 15C-050 and the springs 15C-055 with the retaining rings 15C-060 to the flap hinge half 15C-040 and to the washbasin hinge half 15C-045.

b Attach the flap 15C-020 with the screws 15C-025 and the washers 15C-030 to the flap hinge half 15C-040.

2 Attach the waste flap assembly 15C-015 with the screws 15C-065, the washers 15C-070 and the clip nuts 15C-075.

(d) Attach the washbasin assembly 15C-010 with the screws 15C-130 and the washers 15C-140 to the lavatory structure.

(e) Attach the washbasin assembly 15C-010 with the screws 15C-150, the washers 15C-160 and the nuts 15C-230 to the angles 15C-200.

(f) Attach the washbasin assembly 15C-010 with the screws 15C-250 and the washers 15C-160 to the washbasin unit bracket 15C-190.

(g) Attach the ground cable in accordance with the Process and Material Specification PMS 01-04-58 to the washbasin assembly 15C-010.

(h) Attach the damper 15C-090 with the washers 15C-110, the bolts 15C-100 and the new lock pins 15C-120 to waste flap assembly 15C-015 and to the waste chute 18-010.

(i) Attach the liquid soap dispenser assembly 15C-180 to the washbasin assembly 15C-010.

TASK 25-41-51-400-811-E01
D2549010400200 D2549010400600 D2549010401000 D2549010509800 D2549010510000
D2549010512000 D2549010600000 D2549010600400 D2549010602400 D2549010612600
D2549010613400 D2549010613600 D2549020400600 D2549020401000 D2549020404400
D2549020405200 D2549020406400 D2549020409800 D2549020410600 D2549020508000
D2549020512600 D2549020604600 D2549020605000 D2549020608400 D2549020614000
D2549020701400 D2549020706600 D2549020709000 D2549020811600 D2549020812000
D2549020812400 D2549020814600 D2549030408200 D2549030412200 D2549030413400
D2549030504600 R225401136-016 R225401649-000

86. Assembly and Installation of the Washbasin Unit

A. General

This task gives you the installation and assembly procedures of the component.

B. Job Set-up Information

(1) Not applicable

C. Procedure

WARNING: BE CAREFUL WHEN YOU USE SOLVENTS/CLEANING AGENTS, SEALANTS AND OTHER MATERIALS. OBEY THE MATERIAL MANUFACTURER'S INSTRUCTIONS AND THE LOCAL REGULATIONS. MAKE SURE THAT THERE IS A GOOD FLOW OF AIR THROUGH THE WORK AREA. DO NOT BREATHE THE FUMES. DO NOT SMOKE. DO NOT USE THESE MATERIALS NEAR A FLAME, SPARKS OR SOURCES OF HEAT. USE PROTECTIVE CLOTHING, GOGGLES AND GLOVES. IF YOU GET ONE OF THESE MATERIALS ON YOUR SKIN OR IN YOUR EYES, FLUSH IT AWAY WITH A FLOW OF CLEAN WATER. IF YOU GET ONE OF THESE MATERIALS IN YOUR MOUTH, GET IMMEDIATE MEDICAL AID. IN GENERAL, THESE MATERIALS ARE POISONOUS, FLAMMABLE AND SKIN IRRITANTS.

CAUTION: DO ALL THE WORK ON A CLEAN, SOFT SURFACE TO PREVENT DAMAGE TO THE COMPONENTS.

CAUTION: MAKE SURE THAT ALL THE PARTS ARE CLEAN BEFORE YOU ASSEMBLE THEM.

SUB TASK 25-41-51-440-085-A01
D2549010509800 D2549010512000 D2549010600000 D2549010600400
D2549010602400 D2549020604600 D2549020605000 D2549020608400
D2549020614000 D2549020701400 R225401136-016

1. Assembly and Installation of the Washbasin Unit (15D-1)

(a) Attach the washbasin bracket 15D-210 with the screws 15D-180 and the washers 15D-190 to the lavatory structure.

(b) Attach the angles 15D-220 with the screws 15D-180 and the washers 15D-170 to the lavatory structure.

(c) Attach the bracket 15D-290 with the screw 15D-160 and the washer 15D-270 to the lavatory structure.

(d) Assemble the washbasin assembly 15D-010 as follows:

1 Assemble the flap assembly 15D-040 as follows:
a

WARNING: BE VERY CAREFUL WHEN YOU REMOVE OR INSTALL THE SPRING. BECAUSE THERE IS REMAINING TENSION IN THE SPRING, IT CAN CAUSE YOU INJURY.

Attach the flap 15D-050 and the springs 15D-080 with the pins 15D-060 and the splints 15D-070.

2 Attach the flap assembly 15D-040 with the screws 15D-090, the washers 15D-100 and the nuts 15D-110 to the washbasin 15D-030.

(e) Attach the rear cover 15D-020 and the washbasin assembly 15D-010 with the screws 15D-160 and the washers 15D-170 to the lavatory structure.

(f) Attach the washbasin assembly 15D-010 and the brackets 15D-290, 15D-310 with the screws 15D-160 and the washers 15D-190 to the angles 15D-220.

(g) Attach the washbasin assembly 15D-010 with the screw 15D-260, the washer 15D-270 and the nut 15D-280 to the washbasin bracket 15D-210.

(h) Attach the ground cable in accordance with the Process and Material Specification PMS 01-04-58 to the washbasin assembly 15D-010.

(i) Attach the liquid soap dispenser assembly 15D-200 to the washbasin assembly 15D-010.

NOTE: For further instructions, see CMMV 25-40-02_120C2 (liquid soap dispenser assembly).

SUB TASK 25-41-51-440-085-B01
D2549010400200 D2549010400600 D2549010401000 D2549010510000 D2549010612600 D2549010613400 D2549010613600 D2549020400600

D2549020401000 D2549020404400 D2549020405200 D2549020406400
D2549020409800 D2549020410600 D2549020508000 D2549020512600
D2549020706600 D2549020709000 D2549020811600 D2549020812000
D2549020812400 D2549020814600 D2549030408200 D2549030412200
D2549030413400 D2549030504600 R225401649-000

2. Assembly and Installation of the Washbasin Unit (15D-1)

(a) Attach the washbasin bracket 15D-210 with the screws 15D-180 and the washers 15D-190 to the lavatory structure.

(b) Attach the angles 15D-220 with the screws 15D-180 and the washers 15D-170 to the lavatory structure.

(c) Attach the bracket 15D-290 with the screw 15D-160 and the washer 15D-270 to the lavatory structure.

(d) Assemble the washbasin assembly 15D-010 as follows:

1 Assemble the flap assembly 15D-040 as follows:
a

WARNING: BE VERY CAREFUL WHEN YOU REMOVE OR INSTALL THE SPRING. BECAUSE THERE IS REMAINING TENSION IN THE SPRING, IT CAN CAUSE YOU INJURY.

Attach the flap 15D-050 and the springs 15D-080 with the pins 15D-060 and the splints 15D-070.

2 Attach the flap assembly 15D-040 with the screws 15D-090, the washers 15D-100 and the nuts 15D-110 to the washbasin 15D-030.

(e) Attach the rear cover 15D-020 and the washbasin assembly 15D-010 with the screws 15D-160 and the washers 15D-170 to the lavatory structure.

(f) Attach the washbasin assembly 15D-010 and the brackets 15D-290, 15D-310 with the screws 15D-160 and the washers 15D-190 to the angles 15D-220.

(g) Attach the washbasin assembly 15D-010 with the screw 15D-260, the washer 15D-270 and the nut 15D-280 to the washbasin bracket 15D-210.

(h) Attach the ground cable in accordance with the Process and Material Specification PMS 01-04-58 to the washbasin assembly 15D-010.

(i) Attach the liquid soap dispenser 15D-200 to the washbasin assembly 15D-010.

NOTE: For further instructions, see CMMV 25-40-01_120C2 (liquid soap dispenser).

TASK 25-41-51-400-811-F01
D2549010513000 D2549030507000 D2549030507200 R225401172-002

87. Assembly and Installation of the Washbasin Unit

A. General

This task gives you the installation and assembly procedures of the component.

B. Job Set-up Information

(1) Not applicable

C. Procedure

WARNING: BE CAREFUL WHEN YOU USE SOLVENTS/CLEANING AGENTS, SEALANTS AND OTHER MATERIALS. OBEY THE MATERIAL MANUFACTURER'S INSTRUCTIONS AND THE LOCAL REGULATIONS. MAKE SURE THAT THERE IS A GOOD FLOW OF AIR THROUGH THE WORK AREA. DO NOT BREATHE THE FUMES. DO NOT SMOKE. DO NOT USE THESE MATERIALS NEAR A FLAME, SPARKS OR SOURCES OF HEAT. USE PROTECTIVE CLOTHING, GOGGLES AND GLOVES. IF YOU GET ONE OF THESE MATERIALS ON YOUR SKIN OR IN YOUR EYES, FLUSH IT AWAY WITH A FLOW OF CLEAN WATER. IF YOU GET ONE OF THESE MATERIALS IN YOUR MOUTH, GET IMMEDIATE MEDICAL AID. IN GENERAL, THESE MATERIALS ARE POISONOUS, FLAMMABLE AND SKIN IRRITANTS.

CAUTION: DO ALL THE WORK ON A CLEAN, SOFT SURFACE TO PREVENT DAMAGE TO THE COMPONENTS.

CAUTION: MAKE SURE THAT ALL THE PARTS ARE CLEAN BEFORE YOU ASSEMBLE THEM.

SUB TASK 25-41-51-440-086-A01

1. Assembly and Installation of the Washbasin Unit (15E-1), (18-1)

(a) Attach the washbasin unit bracket 15E-170 with the screws 15E-210 and the washers 15E-150 to the lavatory structure.

(b) Attach the angles 15E-190 with the screws 15E-230 and the washers 15E-130 to the lavatory structure.

(c) Assemble the washbasin assembly 15E-010 as follows:

1 Assemble the waste flap assembly 15E-015 as follows:
a Assemble the hinge assembly 15E-035 as follows:

WARNING: **BE VERY CAREFUL WHEN YOU REMOVE OR INSTALL THE SPRING. BECAUSE THERE IS REMAINING TENSION IN THE SPRING, IT CAN CAUSE YOU INJURY.**

Attach the axle 15E-050 and the springs 15E-055 with the retaining rings 15E-060 to the flap hinge half 15E-040 and to the washbasin hinge half 15E-045.

b Attach the flap 15E-020 with the screws 15E-025 and the washers 15E-030 to the flap hinge half 15E-040.

2 Attach the waste flap assembly 15E-015 with the screws 15E-065, the washers 15E-070 and the clip nuts 15E-075.

(d) Attach the washbasin assembly 15E-010 with the screws 15E-120 and the washers 15E-130 to the lavatory structure.

(e) Attach the washbasin assembly 15E-010 with the screws 15E-140, the washers 15E-150 and the nuts 15E-220 to the angles 15E-190.

(f) Attach the washbasin assembly 15E-010 with the screws 15E-240 and the washers 15E-150 to the washbasin unit bracket 15E-170.

(g) Attach the ground cable in accordance with the Process and Material Specification PMS 01-04-58 to the washbasin assembly 15E-010.

(h) Attach the damper 15E-080 with the washers 15E-100, the bolts 15E-090 and the new lock pins 15E-110 to waste flap assembly 15E-015 and to the waste chute 18-010.

(i) Attach the liquid soap dispenser assembly 15E-160 to the washbasin assembly 15E-010.

NOTE: **For further instructions, see CMMV 25-40-02_120C2 (liquid soap dispenser assembly).**

TASK 25-41-51-400-811-G01

D2549010404000 D2549010404800 D2549010510600 D2549010512600 D2549010514000
D2549010514200 D2549010514400 D2549010514800 D2549010600200 D2549010600600
D2549010601000 D2549010601200 D2549010601400 D2549010601800 D2549010602600
D2549010603200 D2549010606400 D2549010607800 D2549010609400 D2549010610600
D2549010614400 D2549020402200 D2549020407200 D2549020506200 D2549020506400
D2549020506600 D2549020506800 D2549020507000 D2549020507200 D2549020508200
D2549020510400 D2549020512800 D2549020514000 D2549020602200 D2549020605600
D2549020608200 D2549020610400 D2549020612200 D2549020612400 D2549020612600
D2549020612800 D2549020613000 D2549020613200 D2549020613600 D2549020613800
D2549020614400 D2549020614600 D2549020700000 D2549020700400 D2549020700800
D2549020701000 D2549020701800 D2549020702000 D2549020703600 D2549020703800
D2549020704000 D2549020709600 D2549020711000 D2549020713800 D2549020801000
D2549020801600 D2549020805400 D2549020811200 D2549030401000 D2549030402000
D2549030402400 D2549030403400 D2549030403600 D2549030404000 D2549030404400
D2549030404600 D2549030405200 D2549030412000 D2549030504200 D2549030505400
D2549030505800 D2549030506600 D2549030506800 D2549030507400 D2549030507600
D2549030507800 D2549030508000 D2549030508600 D2549030508800 D2549030509000
D2549030509200 D2549030509400 D2549030509600 D2549030510200 D2549030510600
D2549030511000 D2549030511400 D2549030511600 D2549030511800 D2549030512000
D2549030512200 D2549030512400 D2549030513000 D2549030513200 D2549030513600
D2549030513800 D2549030514000 D2549030514200 D2549030514400 D2549030514800
D2549030601200 D2549030601800 D2549030602800 D2549030603400 D2549030603800
D2549030604800 D2549030605200 D2549030605400 D2549030607000 D2549030607400
D2549030607600 D2549030608800 D2549030610600 D2549030611200 D2549030611400
D2549030612800 D2549030613200 D2549030613600 R225401134-002 R225401134-004
R225401134-006 R225401134-008 R225401134-010 R225401134-012 R225401134-016
R225401134-018 R225401134-020 R225401134-022 R225401134-024 R225401134-026
R225401134-028 R225401134-030 R225401134-032 R225401134-034 R225401134-036
R225401137-004 R225401137-006 R225401137-008 R225401153-000 R225401168-004
R225401168-006 R225401175-002 R225401183-000 R225401183-002 R225401183-004
R225401183-006 R225401183-008

88. Assembly and Installation of the Washbasin Unit

A. General

This task gives you the installation and assembly procedures of the component.

B. Job Set-up Information

(1) Not applicable

C. Procedure

WARNING: **BE CAREFUL WHEN YOU USE SOLVENTS/CLEANING AGENTS, SEALANTS AND OTHER MATERIALS. OBEY THE MATERIAL MANUFACTURER'S INSTRUCTIONS AND THE LOCAL REGULATIONS. MAKE SURE THAT THERE IS A GOOD FLOW OF AIR THROUGH THE WORK AREA. DO NOT BREATHE THE FUMES. DO NOT SMOKE. DO NOT USE THESE MATERIALS NEAR A FLAME, SPARKS OR SOURCES OF HEAT. USE PROTECTIVE CLOTHING, GOGGLES AND GLOVES. IF YOU GET ONE OF THESE MATERIALS ON YOUR SKIN OR IN YOUR EYES, FLUSH IT AWAY WITH A FLOW OF CLEAN WATER. IF YOU GET ONE OF THESE MATERIALS IN YOUR MOUTH, GET IMMEDIATE MEDICAL AID. IN GENERAL, THESE MATERIALS ARE POISONOUS, FLAMMABLE AND SKIN IRRITANTS.**

CAUTION: **DO ALL THE WORK ON A CLEAN, SOFT SURFACE TO PREVENT DAMAGE TO THE COMPONENTS.**

CAUTION: **MAKE SURE THAT ALL THE PARTS ARE CLEAN BEFORE YOU ASSEMBLE THEM.**

SUB TASK 25-41-51-440-087-A01

D2549020508200 D2549020512800 D2549020605600 D2549020608200 D2549020613600 D2549020801000 D2549030402000 D2549030403400 D2549030404600 D2549030405200 D2549030507800 D2549030513000 D2549030602800 D2549030604800 D2549030607000 D2549030610600 D2549030612800 R225401134-002 R225401134-004 R225401134-006 R225401134-008 R225401134-010 R225401134-012 R225401134-016 R225401134-018 R225401134-020 R225401134-022 R225401134-024 R225401134-026 R225401134-028 R225401134-030 R225401134-032 R225401134-034 R225401134-036

1. Assembly and Installation of the Washbasin Unit (15F-1), (18-1)

   (a) Attach the washbasin unit bracket 15F-240 with the screws 15F-260 and the washers 15F-220 to the lavatory structure.

   (b) Attach the angles 15F-270 with the screws 15F-290 and the washers 15F-200 to the lavatory structure.

   (c) Assemble the washbasin assembly 15F-010 as follows:

      1 Assemble the waste flap assembly 15F-020 as follows:
      a Assemble the hinge assembly 15F-060 as follows:

WARNING: **BE VERY CAREFUL WHEN YOU REMOVE OR INSTALL THE SPRING. BECAUSE THERE IS REMAINING TENSION IN THE SPRING, IT CAN CAUSE YOU INJURY.**

Attach the axle 15F-090 and the springs 15F-100 with the retaining rings 15F-110 to the flap hinge half 15F-070 and to the washbasin hinge half 15F-080.

b Attach the flap 15F-030 with the screws 15F-040 and the washers 15F-050 to the flap hinge half 15F-070.

2 Attach the waste flap assembly 15F-020 with the screws 15F-120, the washers 15F-130 and the clip nuts 15F-140.

(d) Attach the washbasin assembly 15F-010 with the screws 15F-190 and the washers 15F-200 to the lavatory structure.

(e) Attach the washbasin assembly 15F-010 with the screws 15F-210, the washers 15F-220 and the nuts 15F-300 to the angles 15F-270.

(f) Attach the washbasin assembly 15F-010 with the screws 15F-310 and the washers 15F-220 to the washbasin unit bracket 15F-240.

(g) Attach the ground cable in accordance with the Process and Material Specification PMS 01-04-58 to the washbasin assembly 15F-010.

(h) Attach the damper 15F-150 with the washers 15F-170, the bolts 15F-160 and the new lock pins 15F-180 to waste flap assembly 15F-020 and to the waste chute 18-010.

SUB TASK 25-41-51-440-087-B01

D2549010510600 D2549010512600 D2549010514000 D2549010514200
D2549010514400 D2549010514800 D2549010600200 D2549010600600
D2549010601000 D2549010601200 D2549010601400 D2549010601800
D2549010602600 D2549020506600 D2549020506800 D2549020602200
D2549020612200 D2549020612400 D2549020612600 D2549020612800
D2549020613000 D2549020613200 D2549020613800 D2549020614600
D2549020700000 D2549020700400 D2549020701800 D2549020702000
D2549020703600 D2549020703800 D2549030504200 D2549030507400
D2549030507600 D2549030508000 D2549030508600 D2549030508800
D2549030509000 D2549030509200 D2549030510200 D2549030510600
D2549030511000 D2549030511400 D2549030511600 D2549030511800
D2549030512000 D2549030512200 D2549030512400 D2549030513200

D2549030513600 D2549030514200 R225401137-004 R225401137-006 R225401137-008 R225401153-000 R225401168-004 R225401168-006 R225401175-002

2. Assembly and Installation of the Washbasin Unit (15F-1), (18-1)

(a) Attach the washbasin unit bracket 15F-240 with the screws 15F-260 and the washers 15F-220 to the lavatory structure.

(b) Attach the angles 15F-270 with the screws 15F-290 and the washers 15F-200 to the lavatory structure.

(c) Assemble the washbasin assembly 15F-010 as follows:

1 Assemble the waste flap assembly 15F-020 as follows:

a Assemble the hinge assembly 15F-060 as follows:

WARNING: BE VERY CAREFUL WHEN YOU REMOVE OR INSTALL THE SPRING. BECAUSE THERE IS REMAINING TENSION IN THE SPRING, IT CAN CAUSE YOU INJURY.

Attach the axle 15F-090 and the springs 15F-100 with the retaining rings 15F-110 to the flap hinge half 15F-070 and to the washbasin hinge half 15F-080.

b Attach the flap 15F-030 with the screws 15F-040 and the washers 15F-050 to the flap hinge half 15F-070.

2 Attach the waste flap assembly 15F-020 with the screws 15F-120, the washers 15F-130 and the clip nuts 15F-140.

(d) Attach the washbasin assembly 15F-010 with the screws 15F-190 and the washers 15F-200 to the lavatory structure.

(e) Attach the washbasin assembly 15F-010 with the screws 15F-210, the washers 15F-220 and the nuts 15F-300 to the angles 15F-270.

(f) Attach the washbasin assembly 15F-010 with the screws 15F-310 and the washers 15F-220 to the washbasin unit bracket 15F-240.

(g) Attach the ground cable in accordance with the Process and Material Specification PMS 01-04-58 to the washbasin assembly 15F-010.

(h) Attach the damper 15F-150 with the washers 15F-170, the bolts 15F-160 and the new lock pins 15F-180 to waste flap assembly 15F-020 and to the waste chute 18-010.

(i) Attach the liquid soap dispenser assembly 15F-230 to the washbasin assembly 15F-010.

NOTE: For further instructions, see CMMV 25-40-02_120C2 (liquid soap dispenser assembly).

SUB TASK 25-41-51-440-087-C01
D2549030402400 D2549030403600 D2549030404400 D2549030513800 D2549030601800 D2549030603800 D2549030607400 D2549030608800 D2549030611200 D2549030613200

3. Assembly and Installation of the Washbasin Unit (15F-1), (18-1)

(a) Attach the washbasin unit bracket 15F-240 with the screws 15F-260 and the washers 15F-220 to the lavatory structure.

(b) Attach the angles 15F-270 with the screws 15F-290 and the washers 15F-200 to the lavatory structure.

(c) Assemble the washbasin assembly 15F-010 as follows:

1 Assemble the waste flap assembly 15F-020 as follows:
a Assemble the hinge assembly 15F-060 as follows:

WARNING: BE VERY CAREFUL WHEN YOU REMOVE OR INSTALL THE SPRING. BECAUSE THERE IS REMAINING TENSION IN THE SPRING, IT CAN CAUSE YOU INJURY.

Attach the axle 15F-090 and the springs 15F-100 with the retaining rings 15F-110 to the flap hinge half 15F-070 and to the washbasin hinge half 15F-080.

b Attach the flap 15F-030 with the screws 15F-040 and the washers 15F-050 to the flap hinge half 15F-070.

2 Attach the waste flap assembly 15F-020 with the screws 15F-120, the washers 15F-130 and the clip nuts 15F-140.

(d) Attach the washbasin assembly 15F-010 with the screws 15F-190 and the washers 15F-200 to the lavatory structure.

(e) Attach the washbasin assembly 15F-010 with the screws 15F-210, the washers 15F-220 and the nuts 15F-300 to the angles 15F-270.

(f) Attach the washbasin assembly 15F-010 with the screws 15F-310 and the washers 15F-220 to the washbasin unit bracket 15F-240.

(g) Attach the ground cable in accordance with the Process and Material Specification PMS 01-04-58 to the washbasin assembly 15F-010.

(h) Attach the damper 15F-150 with the washers 15F-170, the bolts 15F-160 and the new lock pins 15F-180 to waste flap assembly 15F-020 and to the waste chute 18-010.

(i) Attach the liquid soap dispenser support 15F-235 to the washbasin assembly 15F-010.

SUB TASK 25-41-51-440-087-D01

D2549020506200 D2549020506400 D2549020507000 D2549020507200 D2549020514000 D2549020610400 D2549020614400 D2549020700800 D2549020701000 D2549020704000 D2549020709600 D2549020711000 D2549020801600 D2549020811200 D2549030401000 D2549030505400 D2549030505800 D2549030506600 D2549030506800 D2549030509400 D2549030509600 D2549030514000 D2549030514400 D2549030601200 D2549030603400 D2549030605200 D2549030605400 D2549030607600 D2549030611400

4. Assembly and Installation of the Washbasin Unit (15F-1), (18-1)

(a) Attach the washbasin unit bracket 15F-240 with the screws 15F-260 and the washers 15F-220 to the lavatory structure.

(b) Attach the angles 15F-270 with the screws 15F-290 and the washers 15F-200 to the lavatory structure.

(c) Assemble the washbasin assembly 15F-010 as follows:

1 Assemble the waste flap assembly 15F-020 as follows:
a Assemble the hinge assembly 15F-060 as follows:

WARNING: BE VERY CAREFUL WHEN YOU REMOVE OR INSTALL THE SPRING. BECAUSE THERE IS REMAINING TENSION IN THE SPRING, IT CAN CAUSE YOU INJURY.

Attach the axle 15F-090 and the springs 15F-100 with the retaining rings 15F-110 to the flap hinge half 15F-070 and to the washbasin hinge half 15F-080.

b Attach the flap 15F-030 with the screws 15F-040 and the washers 15F-050 to the flap hinge half 15F-070.

2 Attach the waste flap assembly 15F-020 with the screws 15F-120, the washers 15F-130 and the clip nuts 15F-140.

(d) Attach the washbasin assembly 15F-010 with the screws 15F-190 and the washers 15F-200 to the lavatory structure.

(e) Attach the washbasin assembly 15F-010 with the screws 15F-210, the washers 15F-220 and the nuts 15F-300 to the angles 15F-270.

(f) Attach the washbasin assembly 15F-010 with the screws 15F-310 and the washers 15F-220 to the washbasin unit bracket 15F-240.

(g) Attach the ground cable in accordance with the Process and Material Specification PMS 01-04-58 to the washbasin assembly 15F-010.

(h) Attach the damper 15F-150 with the washers 15F-170, the bolts 15F-160 and the new lock pins 15F-180 to waste flap assembly 15F-020 and to the waste chute 18-010.

(i) Attach the liquid soap dispenser bottle 15F-230 to the liquid soap dispenser support 15F-235.

(j) Attach the liquid soap dispenser bottle 15F-230 and the liquid soap dispenser support 15F-235 to the washbasin assembly 15F-010.

SUB TASK 25-41-51-440-087-E01
D2549010404000 D2549010404800 D2549010603200 D2549010606400 D2549010607800 D2549010609400 D2549010610600 D2549010614400 D2549020402200 D2549020407200 D2549020510400 D2549020713800 D2549020805400 D2549030404000 D2549030412000 D2549030514800 D2549030613600 R225401183-000 R225401183-002 R225401183-004 R225401183-006 R225401183-008

5. Assembly and Installation of the Washbasin Unit (15F-1), (18-1)

(a) Attach the washbasin unit bracket 15F-240 with the screws 15F-260 and the washers 15F-220 to the lavatory structure.

(b) Attach the angles 15F-270 with the screws 15F-290 and the washers 15F-200 to the lavatory structure.

(c) Assemble the washbasin assembly 15F-010 as follows:

1 Assemble the waste flap assembly 15F-020 as follows:
a Assemble the hinge assembly 15F-060 as follows:

WARNING: BE VERY CAREFUL WHEN YOU REMOVE OR INSTALL THE SPRING. BECAUSE THERE IS REMAINING TENSION IN THE SPRING, IT CAN CAUSE YOU INJURY.

Attach the axle 15F-090 and the springs 15F-100 with the retaining rings 15F-110 to the flap hinge half 15F-070 and to the washbasin hinge half 15F-080.

b Attach the flap 15F-030 with the screws 15F-040 and the washers 15F-050 to the flap hinge half 15F-070.

2 Attach the waste flap assembly 15F-020 with the screws 15F-120, the washers 15F-130 and the clip nuts 15F-140.

(d) Attach the washbasin assembly 15F-010 with the screws 15F-190 and the washers 15F-200 to the lavatory structure.

(e) Attach the washbasin assembly 15F-010 with the screws 15F-210, the washers 15F-220 and the nuts 15F-300 to the angles 15F-270.

(f) Attach the washbasin assembly 15F-010 with the screws 15F-310 and the washers 15F-220 to the washbasin unit bracket 15F-240.

(g) Attach the ground cable in accordance with the Process and Material Specification PMS 01-04-58 to the washbasin assembly 15F-010.

(h) Attach the damper 15F-150 with the washers 15F-170, the bolts 15F-160 and the new lock pins 15F-180 to waste flap assembly 15F-020 and to the waste chute 18-010.

(i) Attach the liquid soap dispenser 15F-230 to the washbasin assembly 15F-010.

NOTE: For further instructions, see CMMV 25-40-01_120C2 (liquid soap dispenser).

TASK 25-41-51-400-811-H01

D2549010400000 D2549010400400 D2549010400800 D2549010402600 D2549010514600
D2549010600800 D2549010601600 D2549010602000 D2549010602200 D2549010602800
D2549010603000 D2549010603400 D2549010603800 D2549010604000 D2549010604200
D2549010604400 D2549010604600 D2549010605000 D2549010606600 D2549010607200
D2549010607400 D2549010608800 D2549010609000 D2549010609200 D2549010609600
D2549010609800 D2549010610400 D2549010610800 D2549010611000 D2549010611600
D2549010611800 D2549010612000 D2549010612400 D2549010613000 D2549010613800
D2549010614200 D2549010614600 D2549010614800 D2549020400000 D2549020400200
D2549020400400 D2549020404200 D2549020404600 D2549020405000 D2549020405400
D2549020405600 D2549020405800 D2549020507400 D2549020507600 D2549020508800
D2549020509600 D2549020509800 D2549020510000 D2549020510600 D2549020510800
D2549020511200 D2549020511600 D2549020511800 D2549020512000 D2549020512400
D2549020513600 D2549020514400 D2549020514800 D2549020612000 D2549020614800
D2549020700200 D2549020700600 D2549020701600 D2549020702200 D2549020702400
D2549020702600 D2549020702800 D2549020703400 D2549020704200 D2549020704400
D2549020704600 D2549020704800 D2549020705000 D2549020705200 D2549020705400
D2549020706000 D2549020706800 D2549020707200 D2549020707400 D2549020707600
D2549020707800 D2549020708000 D2549020708200 D2549020708600 D2549020708800
D2549020709400 D2549020709800 D2549020711200 D2549020711400 D2549020711600
D2549020712200 D2549020713200 D2549020713400 D2549020713600 D2549020714400
D2549020714600 D2549020800000 D2549020800600 D2549020802000 D2549020802800
D2549020803000 D2549020803200 D2549020803400 D2549020803600 D2549020803800
D2549020804800 D2549020805200 D2549020805600 D2549020806000 D2549020806200
D2549020806600 D2549020806800 D2549020807400 D2549020807800 D2549020808400
D2549020808800 D2549020809000 D2549020809400 D2549020810000 D2549020810400
D2549020810600 D2549020810800 D2549020811400 D2549020812200 D2549020812600
D2549020813400 D2549020813600 D2549020814200 D2549020814400 D2549020814800
D2549030400000 D2549030400600 D2549030401200 D2549030401800 D2549030402200
D2549030403800 D2549030404200 D2549030405000 D2549030405400 D2549030405600
D2549030405800 D2549030406000 D2549030406400 D2549030406800 D2549030407000
D2549030407200 D2549030407400 D2549030407600 D2549030407800 D2549030408000
D2549030408400 D2549030408600 D2549030409800 D2549030410400 D2549030508200
D2549030508400 D2549030509800 D2549030510000 D2549030510400 D2549030510800
D2549030511200 D2549030512800 D2549030513400 D2549030514600 D2549030600000
D2549030600400 D2549030600800 D2549030601000 D2549030601400 D2549030601600
D2549030602000 D2549030602200 D2549030602400 D2549030602600 D2549030603000
D2549030603600 D2549030604400 D2549030605000 D2549030605600 D2549030606200
D2549030607800 D2549030608200 D2549030609200 D2549030610400 D2549030611600
D2549030612400 D2549030612600 D2549030613800 D2549030614600 R225401115-000
R225401137-014 R225401142-000 R225401142-002 R225401145-002 R225401145-004
R225401145-006 R225401145-008 R225401145-010 R225401145-012 R225401145-014
R225401152-000 R225401152-002 R225401152-004 R225401152-006 R225401160-000
R225401168-000 R225401168-002 R225401168-008 R225401168-010 R225401168-012
R225401168-014 R225401168-016 R225401168-018 R225401168-020 R225401168-022
R225401168-024 R225401168-026 R225401168-028 R225401172-000 R225401172-004
R225401172-006 R225401172-008 R225401172-010 R225401172-012 R225401172-014

R225401172-016 R225401172-018 R225401192-000 R225401192-002 R225401195-000 R225401196-000 R225401196-002 R225401196-004 R225401196-006 R225401196-010 R225401196-034 R225401196-036 R225401196-038 R225401196-040 R225401196-046 R225401196-048 R225401196-050 R225401196-052 R225401196-056 R225401199-010 R225401600-000 R225401600-002 R225401600-004 R225401605-000 R225401605-002 R225401611-006 R225401611-012 R225401613-000 R225401619-000 R225401622-002 R225401629-000 R225401629-002 R225401639-000 R225401639-002 R225401643-000 R225401643-002 R225401643-004 R225401646-000 R225401647-000 R225401648-002 R225401656-000 R225401656-002 R225401658-000 R225401662-000 R225401662-002 R225401693-000

89. Assembly and Installation of the Washbasin Unit

A. General

This task gives you the installation and assembly procedures of the component.

B. Job Set-up Information

(1) Not applicable

C. Procedure

WARNING: BE CAREFUL WHEN YOU USE SOLVENTS/CLEANING AGENTS, SEALANTS AND OTHER MATERIALS. OBEY THE MATERIAL MANUFACTURER'S INSTRUCTIONS AND THE LOCAL REGULATIONS. MAKE SURE THAT THERE IS A GOOD FLOW OF AIR THROUGH THE WORK AREA. DO NOT BREATHE THE FUMES. DO NOT SMOKE. DO NOT USE THESE MATERIALS NEAR A FLAME, SPARKS OR SOURCES OF HEAT. USE PROTECTIVE CLOTHING, GOGGLES AND GLOVES. IF YOU GET ONE OF THESE MATERIALS ON YOUR SKIN OR IN YOUR EYES, FLUSH IT AWAY WITH A FLOW OF CLEAN WATER. IF YOU GET ONE OF THESE MATERIALS IN YOUR MOUTH, GET IMMEDIATE MEDICAL AID. IN GENERAL, THESE MATERIALS ARE POISONOUS, FLAMMABLE AND SKIN IRRITANTS.

CAUTION: DO ALL THE WORK ON A CLEAN, SOFT SURFACE TO PREVENT DAMAGE TO THE COMPONENTS.

CAUTION: MAKE SURE THAT ALL THE PARTS ARE CLEAN BEFORE YOU ASSEMBLE THEM.

SUB TASK 25-41-51-440-088-A01
D2549030407400 D2549030511200 D2549030512800 D2549030610400 R225401199-010

1. Assembly and Installation of the Washbasin Unit (15G-1), (18-1)

(a) Attach the washbasin unit bracket 15G-240 with the screws 15G-260 and the washers 15G-220 to the lavatory structure.

(b) Attach the angles 15G-270 with the screws 15G-290 and the washers 15G-200 to the lavatory structure.

(c) Assemble the washbasin assembly 15G-010 as follows:

1 Assemble the waste flap assembly 15G-020 as follows:
a Assemble the hinge assembly 15G-060 as follows:

WARNING: BE VERY CAREFUL WHEN YOU REMOVE OR INSTALL THE SPRING. BECAUSE THERE IS REMAINING TENSION IN THE SPRING, IT CAN CAUSE YOU INJURY.

Attach the axle 15G-090 and the springs 15G-100 with the retaining rings 15G-110 to the flap hinge half 15G-070 and to the washbasin hinge half 15G-080.

b Attach the flap 15G-030 with the screws 15G-040 and the washers 15G-050 to the flap hinge half 15G-070.

2 Attach the waste flap assembly 15G-020 with the screws 15G-120, the washers 15G-130 and the clip nuts 15G-140.

(d) Attach the washbasin assembly 15G-010 with the screws 15G-190 and the washers 15G-200 to the lavatory structure.

(e) Attach the washbasin assembly 15G-010 with the screws 15G-210, the washers 15G-220 and the nuts 15G-300 to the angles 15G-270.

(f) Attach the washbasin assembly 15G-010 with the screws 15G-310 and the washers 15G-220 to the washbasin unit bracket 15G-240.

(g) Attach the ground cable in accordance with the Process and Material Specification PMS 01-04-58 to the washbasin assembly 15G-010.

(h) Attach the damper 15G-150 with the washers 15G-170, the bolts 15G-160 and the new lock pins 15G-180 to waste flap assembly 15G-020 and to the waste chute 18-010.

SUB TASK 25-41-51-440-088-B01
D2549030508200 R225401172-004

2. Assembly and Installation of the Washbasin Unit (15G-1), (18-1)

(a) Attach the washbasin unit bracket 15G-240 with the screws 15G-260 and the washers 15G-220 to the lavatory structure.

(b) Attach the angles 15G-270 with the screws 15G-290 and the washers 15G-200 to the lavatory structure.

(c) Assemble the washbasin assembly 15G-010 as follows:

1 Assemble the waste flap assembly 15G-020 as follows:

a Assemble the hinge assembly 15G-060 as follows:

WARNING: BE VERY CAREFUL WHEN YOU REMOVE OR INSTALL THE SPRING. BECAUSE THERE IS REMAINING TENSION IN THE SPRING, IT CAN CAUSE YOU INJURY.

Attach the axle 15G-090 and the springs 15G-100 with the retaining rings 15G-110 to the flap hinge half 15G-070 and to the washbasin hinge half 15G-080.

b Attach the flap 15G-030 with the screws 15G-040 and the washers 15G-050 to the flap hinge half 15G-070.

2 Attach the waste flap assembly 15G-020 with the screws 15G-120, the washers 15G-130 and the clip nuts 15G-140.

(d) Attach the washbasin assembly 15G-010 with the screws 15G-190 and the washers 15G-200 to the lavatory structure.

(e) Attach the washbasin assembly 15G-010 with the screws 15G-210, the washers 15G-220 and the nuts 15G-300 to the angles 15G-270.

(f) Attach the washbasin assembly 15G-010 with the screws 15G-310 and the washers 15G-220 to the washbasin unit bracket 15G-240.

(g) Attach the ground cable in accordance with the Process and Material Specification PMS 01-04-58 to the washbasin assembly 15G-010.

(h) Attach the damper 15G-150 with the washers 15G-170, the bolts 15G-160 and the new lock pins 15G-180 to waste flap assembly 15G-020 and to the waste chute 18-010.

(i) Attach the liquid soap dispenser assembly 15G-230 to the washbasin assembly 15G-010.

NOTE: For further instructions, see CMMV 25-40-02_120C2 (liquid soap dispenser assembly).

SUB TASK 25-41-51-440-088-C01

D2549010514600 D2549010604400 D2549010605000 D2549010607200 D2549010608800 D2549010610800 D2549020509600 D2549020810000 D2549020810600 D2549020811400 D2549020812200 D2549030403800 D2549030405800 D2549030509800 D2549030602000 D2549030605000 D2549030606200 D2549030609200 D2549030611600 D2549030613800 R225401145-002 R225401145-004 R225401145-006 R225401145-008 R225401145-010 R225401145-012 R225401145-014 R225401172-000 R225401172-006 R225401172-008 R225401172-010 R225401172-012 R225401172-014 R225401172-016 R225401172-018 R225401613-000 R225401646-000 R225401647-000 R225401656-000 R225401656-002

3. Assembly and Installation of the Washbasin Unit (15G-1), (18-1)

(a) Attach the washbasin unit bracket 15G-240 with the screws 15G-260 and the washers 15G-220 to the lavatory structure.

(b) Attach the angles 15G-270 with the screws 15G-290 and the washers 15G-200 to the lavatory structure.

(c) Assemble the washbasin assembly 15G-010 as follows:

1 Assemble the waste flap assembly 15G-020 as follows:

a Assemble the hinge assembly 15G-060 as follows:

WARNING: BE VERY CAREFUL WHEN YOU REMOVE OR INSTALL THE SPRING. BECAUSE THERE IS REMAINING TENSION IN THE SPRING, IT CAN CAUSE YOU INJURY.

Attach the axle 15G-090 and the springs 15G-100 with the retaining rings 15G-110 to the flap hinge half 15G-070 and to the washbasin hinge half 15G-080.

b Attach the flap 15G-030 with the screws 15G-040 and the washers 15G-050 to the flap hinge half 15G-070.

2 Attach the waste flap assembly 15G-020 with the screws 15G-120, the washers 15G-130 and the clip nuts 15G-140.

(d) Attach the washbasin assembly 15G-010 with the screws 15G-190 and the washers 15G-200 to the lavatory structure.

(e) Attach the washbasin assembly 15G-010 with the screws 15G-210, the washers 15G-220 and the nuts 15G-300 to the angles 15G-270.

(f) Attach the washbasin assembly 15G-010 with the screws 15G-310 and the washers 15G-220 to the washbasin unit bracket 15G-240.

(g) Attach the ground cable in accordance with the Process and Material Specification PMS 01-04-58 to the washbasin assembly 15G-010.

(h) Attach the damper 15G-150 with the washers 15G-170, the bolts 15G-160 and the new lock pins 15G-180 to waste flap assembly 15G-020 and to the waste chute 18-010.

(i) Attach the liquid soap dispenser bottle 15G-230 to the liquid soap dispenser support 15G-235.

(j) Attach the liquid soap dispenser bottle 15G-230 and the liquid soap dispenser support 15G-235 to the washbasin assembly 15G-010.

SUB TASK 25-41-51-440-088-D01
D2549030510800 D2549030513400

4. Assembly and Installation of the Washbasin Unit (15G-1), (18-1)

(a) Attach the washbasin unit bracket 15G-240 with the screws 15G-260 and the washers 15G-220 to the lavatory structure.

(b) Attach the angles 15G-270 with the screws 15G-290 and the washers 15G-200 to the lavatory structure.

(c) Assemble the washbasin assembly 15G-010 as follows:

1 Assemble the waste flap assembly 15G-020 as follows:
a Assemble the hinge assembly 15G-060 as follows:

WARNING: BE VERY CAREFUL WHEN YOU REMOVE OR INSTALL THE SPRING. BECAUSE THERE IS REMAINING TENSION IN THE SPRING, IT CAN CAUSE YOU INJURY.

Attach the axle 15G-090 and the springs 15G-100 with the retaining rings 15G-110 to the flap hinge half 15G-070 and to the washbasin hinge half 15G-080.

b Attach the flap 15G-030 with the screws 15G-040 and the washers 15G-050 to the flap hinge half 15G-070.

2 Attach the waste flap assembly 15G-020 with the screws 15G-120, the washers 15G-130 and the clip nuts 15G-140.

(d) Attach the washbasin assembly 15G-010 with the screws 15G-190 and the washers 15G-200 to the lavatory structure.

(e) Attach the washbasin assembly 15G-010 with the screws 15G-210, the washers 15G-220 and the nuts 15G-300 to the angles 15G-270.

(f) Attach the washbasin assembly 15G-010 with the screws 15G-310 and the washers 15G-220 to the washbasin unit bracket 15G-240.

(g) Attach the ground cable in accordance with the Process and Material Specification PMS 01-04-58 to the washbasin assembly 15G-010.

(h) Attach the damper 15G-150 with the washers 15G-170, the bolts 15G-160 and the new lock pins 15G-180 to waste flap assembly 15G-020 and to the waste chute 18-010.

(i) Attach the hand lotion dispenser 15G-320 to the liquid soap dispenser support 15G-330.

(j) Attach the hand lotion dispenser 15G-320 and the liquid soap dispenser support 15G-330 to the washbasin assembly 15G-010.

(k) Attach the liquid soap dispenser assembly 15G-230 to the washbasin assembly 15G-010.

NOTE: For further instructions, see CMMV 25-40-02_120C2 (liquid soap dispenser assembly).

SUB TASK 25-41-51-440-088-E01

D2549010400000 D2549010400400 D2549010400800 D2549010402600
D2549010600800 D2549010601600 D2549010602000 D2549010602200
D2549010602800 D2549010603000 D2549010603400 D2549010603800
D2549010604000 D2549010604200 D2549010604600 D2549010606600
D2549010607400 D2549010609000 D2549010609200 D2549010609600
D2549010609800 D2549010610400 D2549010611000 D2549010611600
D2549010611800 D2549010612000 D2549010612400 D2549010613000
D2549010613800 D2549010614200 D2549010614600 D2549010614800
D2549020400000 D2549020400200 D2549020400400 D2549020404200
D2549020404600 D2549020405000 D2549020405400 D2549020405600
D2549020405800 D2549020507400 D2549020507600 D2549020508800

D2549020509800 D2549020510000 D2549020510600 D2549020510800
D2549020511200 D2549020511600 D2549020511800 D2549020512000
D2549020512400 D2549020513600 D2549020514400 D2549020514800
D2549020612000 D2549020700200 D2549020700600 D2549020701600
D2549020702200 D2549020702400 D2549020702600 D2549020702800
D2549020703400 D2549020704600 D2549020704800 D2549020705000
D2549020705200 D2549020705400 D2549020706000 D2549020706800
D2549020707200 D2549020707400 D2549020707600 D2549020707800
D2549020708000 D2549020708200 D2549020708600 D2549020708800
D2549020709400 D2549020709800 D2549020711200 D2549020711400
D2549020711600 D2549020712200 D2549020713200 D2549020713400
D2549020713600 D2549020714400 D2549020714600 D2549020800000
D2549020800600 D2549020802000 D2549020802800 D2549020803000
D2549020803200 D2549020803400 D2549020803600 D2549020803800
D2549020804800 D2549020805200 D2549020805600 D2549020806000
D2549020806200 D2549020806600 D2549020806800 D2549020807400
D2549020807800 D2549020808400 D2549020808800 D2549020809000
D2549020809400 D2549020810400 D2549020810800 D2549020812600
D2549020813400 D2549020813600 D2549020814200 D2549020814400
D2549020814800 D2549030400000 D2549030400600 D2549030401200
D2549030401800 D2549030402200 D2549030404200 D2549030405000
D2549030405400 D2549030405600 D2549030406000 D2549030406400
D2549030406800 D2549030407000 D2549030407200 D2549030407600
D2549030407800 D2549030408000 D2549030408400 D2549030408600
D2549030409800 D2549030410400 D2549030508400 D2549030510000
D2549030510400 D2549030514600 D2549030600000 D2549030600400
D2549030600800 D2549030601000 D2549030601400 D2549030601600
D2549030602200 D2549030602400 D2549030602600 D2549030603000
D2549030603600 D2549030604400 D2549030605600 D2549030607800
D2549030608200 D2549030612400 D2549030612600 D2549030614600 R225401115-
000 R225401137-014 R225401152-000 R225401152-002 R225401152-004 R225401152-
006 R225401160-000 R225401168-000 R225401168-002 R225401168-008 R225401168-
010 R225401168-012 R225401168-014 R225401168-016 R225401168-018 R225401168-
020 R225401168-022 R225401168-024 R225401168-026 R225401168-028 R225401192-
000 R225401192-002 R225401195-000 R225401196-000 R225401196-002 R225401196-
004 R225401196-006 R225401196-010 R225401196-034 R225401196-036 R225401196-
038 R225401196-040 R225401196-046 R225401196-048 R225401196-050 R225401196-
052 R225401196-056 R225401600-000 R225401600-002 R225401600-004
R225401605-000 R225401605-002 R225401611-006 R225401611-012 R225401619-000
R225401622-002 R225401629-000 R225401629-002 R225401639-000 R225401639-
002 R225401643-000 R225401643-002 R225401643-004 R225401648-002
R225401658-000 R225401662-000 R225401662-002 R225401693-000

5. Assembly and Installation of the Washbasin Unit (15G-1), (18-1)

(a) Attach the washbasin unit bracket 15G-240 with the screws 15G-260 and the washers 15G-220, 15G-225 to the lavatory structure.

(b) Attach the angles 15G-270 with the screws 15G-290 and the washers 15G-200 to the lavatory structure.

(c) Assemble the washbasin assembly 15G-010 as follows:

1 Assemble the waste flap assembly 15G-020 as follows:

a Assemble the hinge assembly 15G-060 as follows:

WARNING: BE VERY CAREFUL WHEN YOU REMOVE OR INSTALL THE SPRING. BECAUSE THERE IS REMAINING TENSION IN THE SPRING, IT CAN CAUSE YOU INJURY.

Attach the axle 15G-090 and the springs 15G-100 with the retaining rings 15G-110 to the flap hinge half 15G-070 and to the washbasin hinge half 15G-080.

b Attach the flap 15G-030 with the screws 15G-040 and the washers 15G-050 to the flap hinge half 15G-070.

2 Attach the waste flap assembly 15G-020 with the screws 15G-120, the washers 15G-130 and the clip nuts 15G-140.

(d) Attach the washbasin assembly 15G-010 with the screws 15G-190 and the washers 15G-200 to the lavatory structure.

(e) Attach the washbasin assembly 15G-010 with the screws 15G-210, the washers 15G-220 and the nuts 15G-300 to the angles 15G-270.

(f) Attach the washbasin assembly 15G-010 with the screws 15G-310 and the washers 15G-220 to the washbasin unit bracket 15G-240.

(g) Attach the ground cable in accordance with the Process and Material Specification PMS 01-04-58 to the washbasin assembly 15G-010.

(h) Attach the damper 15G-150 with the washers 15G-170, the bolts 15G-160 and the new lock pins 15G-180 to waste flap assembly 15G-020 and to the waste chute 18-010.

(i) Attach the liquid soap dispenser 15G-230, the bracket 15G-237 and the washer 15G-239 to the washbasin assembly 15G-010.

NOTE: For further instructions, see CMMV 25-40-01_120C2 (liquid soap dispenser).

SUB TASK 25-41-51-440-088-F01
D2549020704400 R225401142-002

6. Assembly and Installation of the Washbasin Unit (15G-1), (18-1)

(a) Attach the washbasin unit bracket 15G-240 with the screws 15G-260 and the washers 15G-220 to the lavatory structure.

(b) Attach the angles 15G-270 with the screws 15G-290 and the washers 15G-200 to the lavatory structure.

(c) Assemble the washbasin assembly 15G-010 as follows:

1 Assemble the waste flap assembly 15G-020 as follows:
a Assemble the hinge assembly 15G-060 as follows:

WARNING: BE VERY CAREFUL WHEN YOU REMOVE OR INSTALL THE SPRING. BECAUSE THERE IS REMAINING TENSION IN THE SPRING, IT CAN CAUSE YOU INJURY.

Attach the axle 15G-090 and the springs 15G-100 with the retaining rings 15G-110 to the flap hinge half 15G-070 and to the washbasin hinge half 15G-080.

b Attach the flap 15G-030 with the screws 15G-040 and the washers 15G-050 to the flap hinge half 15G-070.

2 Attach the waste flap assembly 15G-020 with the screws 15G-120, the washers 15G-130 and the clip nuts 15G-140.

(d) Attach the washbasin assembly 15G-010 with the screws 15G-190 and the washers 15G-200 to the lavatory structure.

(e) Attach the washbasin assembly 15G-010 with the screws 15G-210, the washers 15G-220 and the nuts 15G-300 to the angles 15G-270.

(f) Attach the washbasin assembly 15G-010 with the screws 15G-310 and the washers 15G-220 to the washbasin unit bracket 15G-240.

(g) Attach the ground cable in accordance with the Process and Material Specification PMS 01-04-58 to the washbasin assembly 15G-010.

(h) Attach the damper 15G-150 with the washers 15G-170, the bolts 15G-160 and the new lock pins 15G-180 to waste flap assembly 15G-020 and to the waste chute 18-010.

(i) Attach the liquid soap dispenser 15G-230 to the washbasin assembly 15G-010.

NOTE: For further instructions, see CMMV 25-40-01_DL161 (liquid soap dispenser).

SUB TASK 25-41-51-440-088-G01
D2549020614800 D2549020704200 R225401142-000

7. Assembly and Installation of the Washbasin Unit (15G-1), (18-1)

(a) Attach the washbasin unit bracket 15G-240 with the screws 15G-260 and the washers 15G-220 to the lavatory structure.

(b) Attach the angles 15G-270 with the screws 15G-290 and the washers 15G-200 to the lavatory structure.

(c) Assemble the washbasin assembly 15G-010 as follows:

1 Assemble the waste flap assembly 15G-020 as follows:
a Assemble the hinge assembly 15G-060 as follows:

WARNING: BE VERY CAREFUL WHEN YOU REMOVE OR INSTALL THE SPRING. BECAUSE THERE IS REMAINING TENSION IN THE SPRING, IT CAN CAUSE YOU INJURY.

Attach the axle 15G-090 and the springs 15G-100 with the retaining rings 15G-110 to the flap hinge half 15G-070 and to the washbasin hinge half 15G-080.

b Attach the flap 15G-030 with the screws 15G-040 and the washers 15G-050 to the flap hinge half 15G-070.

2 Attach the waste flap assembly 15G-020 with the screws 15G-120, the washers 15G-130 and the clip nuts 15G-140.

(d) Attach the washbasin assembly 15G-010 with the screws 15G-190 and the washers 15G-200 to the lavatory structure.

(e) Attach the washbasin assembly 15G-010 with the screws 15G-210, the washers 15G-220 and the nuts 15G-300 to the angles 15G-270.

(f) Attach the washbasin assembly 15G-010 with the screws 15G-310 and the washers 15G-220 to the washbasin unit bracket 15G-240.

(g) Attach the ground cable in accordance with the Process and Material Specification PMS 01-04-58 to the washbasin assembly 15G-010.

(h) Attach the damper 15G-150 with the washers 15G-170, the bolts 15G-160 and the new lock pins 15G-180 to waste flap assembly 15G-020 and to the waste chute 18-010.

(i) Attach the liquid soap dispenser assembly 15G-230 to the washbasin assembly 15G-010.

TASK 25-41-51-400-811-J01
D2549010403000 D2549010604800 D2549010606000 D2549010610000 D2549020404800 D2549020508400 D2549020508600 D2549020513200 D2549020513800 D2549020705600 D2549020707000 D2549020709200 D2549020710200 D2549020710400 D2549020710600 D2549020801800 D2549020805800 D2549020808200 D2549020811800 D2549020812800 D2549020813000 D2549020813800 D2549030406600 D2549030503800 D2549030600600 D2549030608600 D2549030611000 D2549030614000 D2549030614800 R225401136-000 R225401136-004 R225401136-010 R225401136-018 R225401136-020 R225401136-022 R225401152-008 R225401196-012 R225401196-014 R225401196-058 R225401196-060 R225401603-000

90. Assembly and Installation of the Washbasin Unit

A. General

This task gives you the installation and assembly procedures of the component.

B. Job Set-up Information

(1) Not applicable

C. Procedure

WARNING: BE CAREFUL WHEN YOU USE SOLVENTS/CLEANING AGENTS, SEALANTS AND OTHER MATERIALS. OBEY THE MATERIAL MANUFACTURER'S INSTRUCTIONS AND THE LOCAL REGULATIONS. MAKE SURE THAT THERE IS A GOOD FLOW OF AIR THROUGH THE WORK AREA. DO NOT BREATHE THE FUMES. DO NOT SMOKE. DO NOT USE THESE MATERIALS NEAR A FLAME, SPARKS OR SOURCES OF HEAT. USE PROTECTIVE CLOTHING, GOGGLES AND GLOVES. IF YOU GET ONE OF THESE MATERIALS ON YOUR SKIN OR IN YOUR EYES, FLUSH IT AWAY WITH A FLOW OF CLEAN WATER. IF YOU GET ONE OF THESE MATERIALS IN YOUR MOUTH, GET IMMEDIATE MEDICAL AID. IN GENERAL, THESE MATERIALS ARE POISONOUS, FLAMMABLE AND SKIN IRRITANTS.

CAUTION: DO ALL THE WORK ON A CLEAN, SOFT SURFACE TO PREVENT DAMAGE TO THE COMPONENTS.

CAUTION: MAKE SURE THAT ALL THE PARTS ARE CLEAN BEFORE YOU ASSEMBLE THEM.

SUB TASK 25-41-51-440-089-A01
D2549020710600 D2549020805800 D2549020811800 D2549020813800 R225401152-008 R225401196-012 R225401196-014 R225401196-058 R225401196-060

1. Assembly and Installation of the Washbasin Unit (15H-1), (18-1)

(a) Attach the washbasin unit bracket 15H-240 with the screws 15H-260 and the washers 15H-220, 15H-225 to the lavatory structure.

(b) Attach the angles 15H-270 with the screws 15H-290 and the washers 15H-200 to the lavatory structure.

(c) Assemble the washbasin assembly 15H-010 as follows:

1 Assemble the waste flap assembly 15H-020 as follows:
a Assemble the hinge assembly 15H-060 as follows:

WARNING: BE VERY CAREFUL WHEN YOU REMOVE OR INSTALL THE SPRING. BECAUSE THERE IS REMAINING TENSION IN THE SPRING, IT CAN CAUSE YOU INJURY.

Attach the axle 15H-090 and the springs 15H-100 with the retaining rings 15H-110 to the flap hinge half 15H-070 and to the washbasin hinge half 15H-080.

b Attach the flap 15H-030 with the screws 15H-040 and the washers 15H-050 to the flap hinge half 15H-070.

2 Attach the waste flap assembly 15H-020 with the screws 15H-120, the washers 15H-130 and the clip nuts 15H-140.

(d) Attach the washbasin assembly 15H-010 with the screws 15H-190 and the washers 15H-200 to the lavatory structure.

(e) Attach the washbasin assembly 15H-010 with the screws 15H-210, the washers 15H-220 and the nuts 15H-300 to the angles 15H-270.

(f) Attach the washbasin assembly 15H-010 with the screws 15H-310 and the washers 15H-220 to the washbasin unit bracket 15H-240.

(g) Attach the ground cable in accordance with the Process and Material Specification PMS 01-04-58 to the washbasin assembly 15H-010.

(h) Attach the damper 15H-150 with the washers 15H-170, the bolts 15H-160 and the new lock pins 15H-180 to waste flap assembly 15H-020 and to the waste chute 18-010.

SUB TASK 25-41-51-440-089-B01
D2549010606000 D2549020508400 D2549020705600 D2549020709200

2. Assembly and Installation of the Washbasin Unit (15H-1), (18-1)

(a) Attach the washbasin unit bracket 15H-240 with the screws 15H-260 and the washers 15H-220 to the lavatory structure.

(b) Attach the angles 15H-270 with the screws 15H-290 and the washers 15H-200 to the lavatory structure.

(c) Assemble the washbasin assembly 15H-010 as follows:

1 Assemble the waste flap assembly 15H-020 as follows:

a Assemble the hinge assembly 15H-060 as follows:

WARNING: BE VERY CAREFUL WHEN YOU REMOVE OR INSTALL THE SPRING. BECAUSE THERE IS REMAINING TENSION IN THE SPRING, IT CAN CAUSE YOU INJURY.

Attach the axle 15H-090 and the springs 15H-100 with the retaining rings 15H-110 to the flap hinge half 15H-070 and to the washbasin hinge half 15H-080.

b Attach the flap 15H-030 with the screws 15H-040 and the washers 15H-050 to the flap hinge half 15H-070.

2 Attach the waste flap assembly 15H-020 with the screws 15H-120, the washers 15H-130 and the clip nuts 15H-140.

(d) Attach the washbasin assembly 15H-010 with the screws 15H-190 and the washers 15H-200 to the lavatory structure.

(e) Attach the washbasin assembly 15H-010 with the screws 15H-210, the washers 15H-220 and the nuts 15H-300 to the angles 15H-270.

(f) Attach the washbasin assembly 15H-010 with the screws 15H-310 and the washers 15H-220 to the washbasin unit bracket 15H-240.

(g) Attach the ground cable in accordance with the Process and Material Specification PMS 01-04-58 to the washbasin assembly 15H-010.

(h) Attach the damper 15H-150 with the washers 15H-170, the bolts 15H-160 and the new lock pins 15H-180 to waste flap assembly 15H-020 and to the waste chute 18-010.

(i) Attach the liquid soap dispenser 15H-230 to the washbasin assembly 15H-010.

NOTE: For further instructions, see CMMV 25-40-01_DL161 (liquid soap dispenser).

SUB TASK 25-41-51-440-089-C01

D2549020508600 D2549020513200 D2549020710200 D2549020710400 D2549030406600 D2549030608600 D2549030611000 R225401136-000 R225401136-004 R225401136-010 R225401136-018 R225401136-020 R225401136-022

3. Assembly and Installation of the Washbasin Unit (15H-1), (18-1)

(a) Attach the washbasin unit bracket 15H-240 with the screws 15H-260 and the washers 15H-220 to the lavatory structure.

(b) Attach the angles 15H-270 with the screws 15H-290 and the washers 15H-200 to the lavatory structure.

(c) Assemble the washbasin assembly 15H-010 as follows:

1 Assemble the waste flap assembly 15H-020 as follows:

a Assemble the hinge assembly 15H-060 as follows:

WARNING: BE VERY CAREFUL WHEN YOU REMOVE OR INSTALL THE SPRING. BECAUSE THERE IS REMAINING TENSION IN THE SPRING, IT CAN CAUSE YOU INJURY.

Attach the axle 15H-090 and the springs 15H-100 with the retaining rings 15H-110 to the flap hinge half 15H-070 and to the washbasin hinge half 15H-080.

b Attach the flap 15H-030 with the screws 15H-040 and the washers 15H-050 to the flap hinge half 15H-070.

2 Attach the waste flap assembly 15H-020 with the screws 15H-120, the washers 15H-130 and the clip nuts 15H-140.

(d) Attach the washbasin assembly 15H-010 with the screws 15H-190 and the washers 15H-200 to the lavatory structure.

(e) Attach the washbasin assembly 15H-010 with the screws 15H-210, the washers 15H-220 and the nuts 15H-300 to the angles 15H-270.

(f) Attach the washbasin assembly 15H-010 with the screws 15H-310 and the washers 15H-220 to the washbasin unit bracket 15H-240.

(g) Attach the ground cable in accordance with the Process and Material Specification PMS 01-04-58 to the washbasin assembly 15H-010.

(h) Attach the damper 15H-150 with the washers 15H-170, the bolts 15H-160 and the new lock pins 15H-180 to waste flap assembly 15H-020 and to the waste chute 18-010.

(i) Attach the hand lotion dispenser 15H-320 to the liquid soap dispenser support 15H-330.

(j) Attach the hand lotion dispenser 15H-320, the bracket 15H-340, the liquid soap dispenser support 15H-330 and the washer 15H-350 to the washbasin assembly 15H-010.

(k) Attach the liquid soap dispenser 15H-230 to the washbasin assembly 15H-010.

NOTE: For further instructions, see CMMV 25-40-01_120C2 (liquid soap dispenser).

SUB TASK 25-41-51-440-089-D01
D2549010403000 D2549010604800 D2549010610000 D2549020404800 D2549020513800 D2549020707000 D2549020801800 D2549020808200 D2549020812800 D2549020813000 D2549030503800 D2549030600600 D2549030614000 D2549030614800 R225401603-000

4. Assembly and Installation of the Washbasin Unit (15H-1), (18-1)

(a) Attach the washbasin unit bracket 15H-240 with the screws 15H-260 and the washers 15H-220 to the lavatory structure.

(b) Attach the angles 15H-270 with the screws 15H-290 and the washers 15H-200 to the lavatory structure.

(c) Assemble the washbasin assembly 15H-010 as follows:

1 Assemble the waste flap assembly 15H-020 as follows:
a Assemble the hinge assembly 15H-060 as follows:

WARNING: BE VERY CAREFUL WHEN YOU REMOVE OR INSTALL THE SPRING. BECAUSE THERE IS REMAINING TENSION IN THE SPRING, IT CAN CAUSE YOU INJURY.

Attach the axle 15H-090 and the springs 15H-100 with the retaining rings 15H-110 to the flap hinge half 15H-070 and to the washbasin hinge half 15H-080.

b Attach the flap 15H-030 with the screws 15H-040 and the washers 15H-050 to the flap hinge half 15H-070.

2 Attach the waste flap assembly 15H-020 with the screws 15H-120, the washers 15H-130 and the clip nuts 15H-140.

(d) Attach the washbasin assembly 15H-010 with the screws 15H-190 and the washers 15H-200 to the lavatory structure.

(e) Attach the washbasin assembly 15H-010 with the screws 15H-210, the washers 15H-220 and the nuts 15H-300 to the angles 15H-270.

(f) Attach the washbasin assembly 15H-010 with the screws 15H-310 and the washers 15H-220 to the washbasin unit bracket 15H-240.

(g) Attach the ground cable in accordance with the Process and Material Specification PMS 01-04-58 to the washbasin assembly 15H-010.

(h) Attach the damper 15H-150 with the washers 15H-170, the bolts 15H-160 and the new lock pins 15H-180 to waste flap assembly 15H-020 and to the waste chute 18-010.

(i) Attach the liquid soap dispenser 15H-230 to the washbasin assembly 15H-010.

NOTE: For further instructions, see CMMV 25-40-01_120C2 (liquid soap dispenser).

TASK 25-41-51-400-811-K01
D2549010605200 D2549010607600 D2549010611200 D2549030605800

91. Assembly and Installation of the Washbasin Unit

A. General

This task gives you the installation and assembly procedures of the component.

B. Job Set-up Information

(1) Not applicable

C. Procedure

WARNING: BE CAREFUL WHEN YOU USE SOLVENTS/CLEANING AGENTS, SEALANTS AND OTHER MATERIALS. OBEY THE MATERIAL MANUFACTURER'S INSTRUCTIONS AND THE LOCAL REGULATIONS. MAKE SURE THAT THERE IS A GOOD FLOW OF AIR THROUGH THE WORK AREA. DO NOT BREATHE THE FUMES. DO NOT SMOKE. DO NOT USE THESE MATERIALS NEAR A FLAME, SPARKS OR SOURCES OF HEAT. USE PROTECTIVE CLOTHING, GOGGLES AND GLOVES. IF YOU GET ONE OF THESE MATERIALS ON YOUR SKIN OR IN YOUR EYES, FLUSH IT AWAY WITH A FLOW OF CLEAN WATER. IF YOU GET ONE OF THESE MATERIALS IN YOUR MOUTH, GET IMMEDIATE MEDICAL AID. IN GENERAL, THESE MATERIALS ARE POISONOUS, FLAMMABLE AND SKIN IRRITANTS.

CAUTION: DO ALL THE WORK ON A CLEAN, SOFT SURFACE TO PREVENT DAMAGE TO THE COMPONENTS.

CAUTION: MAKE SURE THAT ALL THE PARTS ARE CLEAN BEFORE YOU ASSEMBLE THEM.

SUB TASK 25-41-51-440-090-A01

1. Assembly and Installation of the Washbasin Unit (15J-1), (18-1)

(a) Attach the washbasin unit bracket 15J-240 with the screws 15J-260 and the washers 15J-220 to the lavatory structure.

(b) Attach the angles 15J-270 with the screws 15J-290 and the washers 15J-200 to the lavatory structure.

(c) Assemble the washbasin assembly 15J-010 as follows:

1 Assemble the waste flap assembly 15J-020 as follows:
a Assemble the hinge assembly 15J-060 as follows:

WARNING: **BE VERY CAREFUL WHEN YOU REMOVE OR INSTALL THE SPRING. BECAUSE THERE IS REMAINING TENSION IN THE SPRING, IT CAN CAUSE YOU INJURY.**

Attach the axle 15J-090 and the springs 15J-100 with the retaining rings 15J-110 to the flap hinge half 15J-070 and to the washbasin hinge half 15J-080.

b Attach the flap 15J-030 with the screws 15J-040 and the washers 15J-050 to the flap hinge half 15J-070.

2 Attach the waste flap assembly 15J-020 with the screws 15J-120, the washers 15J-130 and the clip nuts 15J-140.

(d) Attach the washbasin assembly 15J-010 with the screws 15J-190 and the washers 15J-200 to the lavatory structure.

(e) Attach the washbasin assembly 15J-010 with the screws 15J-210, the washers 15J-220 and the nuts 15J-300 to the angles 15J-270.

(f) Attach the washbasin assembly 15J-010 with the screws 15J-310 and the washers 15J-220 to the washbasin unit bracket 15J-240.

(g) Attach the ground cable in accordance with the Process and Material Specification PMS 01-04-58 to the washbasin assembly 15J-010.

(h) Attach the damper 15J-150 with the washers 15J-170, the bolts 15J-160 and the new lock pins 15J-180 to waste flap assembly 15J-020 and to the waste chute 18-010.

(i) Attach the liquid soap dispenser assembly 15J-230 to the washbasin assembly 15J-010.

NOTE: **For further instructions, see CMMV 25-40-03_120C2 (liquid soap dispenser assembly).**

TASK 25-41-51-400-811-L01
D2549010402000 D2549010402800 D2549010611400 D2549020403800 D2549020406200 D2549020800400 D2549020802600 D2549020813200 R225401196-016 R225401196-062

92. Assembly and Installation of the Washbasin Unit

A. General

This task gives you the installation and assembly procedures of the component.

B. Job Set-up Information

(1) Not applicable

C. Procedure

WARNING: BE CAREFUL WHEN YOU USE SOLVENTS/CLEANING AGENTS, SEALANTS AND OTHER MATERIALS. OBEY THE MATERIAL MANUFACTURER'S INSTRUCTIONS AND THE LOCAL REGULATIONS. MAKE SURE THAT THERE IS A GOOD FLOW OF AIR THROUGH THE WORK AREA. DO NOT BREATHE THE FUMES. DO NOT SMOKE. DO NOT USE THESE MATERIALS NEAR A FLAME, SPARKS OR SOURCES OF HEAT. USE PROTECTIVE CLOTHING, GOGGLES AND GLOVES. IF YOU GET ONE OF THESE MATERIALS ON YOUR SKIN OR IN YOUR EYES, FLUSH IT AWAY WITH A FLOW OF CLEAN WATER. IF YOU GET ONE OF THESE MATERIALS IN YOUR MOUTH, GET IMMEDIATE MEDICAL AID. IN GENERAL, THESE MATERIALS ARE POISONOUS, FLAMMABLE AND SKIN IRRITANTS.

CAUTION: DO ALL THE WORK ON A CLEAN, SOFT SURFACE TO PREVENT DAMAGE TO THE COMPONENTS.

CAUTION: MAKE SURE THAT ALL THE PARTS ARE CLEAN BEFORE YOU ASSEMBLE THEM.

SUB TASK 25-41-51-440-091-A01
D2549020406200 R225401196-016 R225401196-062

1. Assembly and Installation of the Washbasin Unit (15K-1), (18-1)

(a) Attach the washbasin unit bracket 15K-250 with the screws 15K-270 and the washers 15K-220, 15K-225 to the lavatory structure.

(b) Attach the angles 15K-280 with the screws 15K-300 and the washers 15K-200 to the lavatory structure.

(c) Assemble the washbasin assembly 15K-010 as follows:

1 Assemble the waste flap assembly 15K-020 as follows:

a Assemble the hinge assembly 15K-060 as follows:

WARNING: BE VERY CAREFUL WHEN YOU REMOVE OR INSTALL THE SPRING. BECAUSE THERE IS REMAINING TENSION IN THE SPRING, IT CAN CAUSE YOU INJURY.

Attach the axle 15K-090 and the springs 15K-100 with the retaining rings 15K-110 to the flap hinge half 15K-070 and to the washbasin hinge half 15K-080.

b Attach the flap 15K-030 with the screws 15K-040 and the washers 15K-050 to the flap hinge half 15K-070.

2 Attach the waste flap assembly 15K-020 with the screws 15K-120, the washers 15K-130 and the clip nuts 15K-140.

(d) Attach the washbasin assembly 15K-010 with the screws 15K-190 and the washers 15K-200 to the lavatory structure.

(e) Attach the washbasin assembly 15K-010 with the screws 15K-210, the washers 15K-220 and the nuts 15K-310 to the angles 15K-280.

(f) Attach the washbasin assembly 15K-010 with the screws 15K-320 and the washers 15K-220 to the washbasin unit bracket 15K-250.

(g) Attach the ground cable in accordance with the Process and Material Specification PMS 01-04-58 to the washbasin assembly 15K-010.

(h) Attach the damper 15K-150 with the washers 15K-170, the bolts 15K-160 and the new lock pins 15K-180 to waste flap assembly 15K-020 and to the waste chute 18-010.

SUB TASK 25-41-51-440-091-B01
D2549020813200

2. Assembly and Installation of the Washbasin Unit (15K-1), (18-1)

(a) Attach the washbasin unit bracket 15K-250 with the screws 15K-270 and the washers 15K-220 to the lavatory structure.

(b) Attach the angles 15K-280 with the screws 15K-300 and the washers 15K-200 to the lavatory structure.

(c) Assemble the washbasin assembly 15K-010 as follows:

1 Assemble the waste flap assembly 15K-020 as follows:
a Assemble the hinge assembly 15K-060 as follows:

WARNING: BE VERY CAREFUL WHEN YOU REMOVE OR INSTALL THE SPRING. BECAUSE THERE IS REMAINING TENSION IN THE SPRING, IT CAN CAUSE YOU INJURY.

Attach the axle 15K-090 and the springs 15K-100 with the retaining rings 15K-110 to the flap hinge half 15K-070 and to the washbasin hinge half 15K-080.

b Attach the flap 15K-030 with the screws 15K-040 and the washers 15K-050 to the flap hinge half 15K-070.

2 Attach the waste flap assembly 15K-020 with the screws 15K-120, the washers 15K-130 and the clip nuts 15K-140.

(d) Attach the washbasin assembly 15K-010 with the screws 15K-190 and the washers 15K-200 to the lavatory structure.

(e) Attach the washbasin assembly 15K-010 with the screws 15K-210, the washers 15K-220 and the nuts 15K-310 to the angles 15K-280.

(f) Attach the washbasin assembly 15K-010 with the screws 15K-320 and the washers 15K-220 to the washbasin unit bracket 15K-250.

(g) Attach the ground cable in accordance with the Process and Material Specification PMS 01-04-58 to the washbasin assembly 15K-010.

(h) Attach the damper 15K-150 with the washers 15K-170, the bolts 15K-160 and the new lock pins 15K-180 to waste flap assembly 15K-020 and to the waste chute 18-010.

(i) Attach the liquid soap dispenser 15K-230 to the washbasin assembly 15K-010.

NOTE: For further instructions, see CMMV 25-40-01_120C2 (liquid soap dispenser).

SUB TASK 25-41-51-440-091-C01
D2549010402000 D2549010402800 D2549010611400 D2549020403800 D2549020800400 D2549020802600

3. Assembly and Installation of the Washbasin Unit (15K-1), (18-1)

(a) Attach the washbasin unit bracket 15K-250 with the screws 15K-270 and the washers 15K-220 to the lavatory structure.

(b) Attach the angles 15K-280 with the screws 15K-300 and the washers 15K-200 to the lavatory structure.

(c) Assemble the washbasin assembly 15K-010 as follows:

1 Assemble the waste flap assembly 15K-020 as follows:

a Assemble the hinge assembly 15K-060 as follows:

WARNING: BE VERY CAREFUL WHEN YOU REMOVE OR INSTALL THE SPRING. BECAUSE THERE IS REMAINING TENSION IN THE SPRING, IT CAN CAUSE YOU INJURY.

Attach the axle 15K-090 and the springs 15K-100 with the retaining rings 15K-110 to the flap hinge half 15K-070 and to the washbasin hinge half 15K-080.

b Attach the flap 15K-030 with the screws 15K-040 and the washers 15K-050 to the flap hinge half 15K-070.

2 Attach the waste flap assembly 15K-020 with the screws 15K-120, the washers 15K-130 and the clip nuts 15K-140.

(d) Attach the washbasin assembly 15K-010 with the screws 15K-190 and the washers 15K-200 to the lavatory structure.

(e) Attach the washbasin assembly 15K-010 with the screws 15K-210, the washers 15K-220 and the nuts 15K-310 to the angles 15K-280.

(f) Attach the washbasin assembly 15K-010 with the screws 15K-320 and the washers 15K-220 to the washbasin unit bracket 15K-250.

(g) Attach the ground cable in accordance with the Process and Material Specification PMS 01-04-58 to the washbasin assembly 15K-010.

(h) Attach the damper 15K-150 with the washers 15K-170, the bolts 15K-160 and the new lock pins 15K-180 to waste flap assembly 15K-020 and to the waste chute 18-010.

(i) Attach the liquid soap dispenser bottle 15K-230 to the liquid soap dispenser support 15K-240.

(j) Attach the liquid soap dispenser bottle 15K-230 and the liquid soap dispenser support 15K-240 to the washbasin assembly 15K-010.

TASK 25-41-51-400-811-M01

D2547161903000 D2549010401800 D2549010402200 D2549010403400 D2549010403600 D2549010403800 D2549010404200 D2549010405400 D2549020300000 D2549020302800 D2549020400800 D2549020401200 D2549020401400 D2549020402000 D2549020402600 D2549020403000 D2549020403200 D2549020403400 D2549020403600 D2549020404000 D2549020406000 D2549020406600 D2549020406800 D2549020407000 D2549020407400 D2549020407600 D2549020407800 D2549020408000 D2549020408200 D2549020408600 D2549020408800 D2549020409000 D2549020410200 D2549020410400 D2549020410800 D2549020411000 D2549020411400 D2549020411600 D2549020411800 D2549020412000 D2549020412200 D2549020413000 D2549020804400 D2549020807200 D2549020809600 D2549030409000 D2549030409200 D2549030409400 D2549030409600 D2549030410000 D2549030410200 D2549030410600 D2549030410800 D2549030411200 D2549030411400 D2549030411600 D2549030411800 D2549030412400 D2549030412600 D2549030412800 D2549030413000 D2549030413200 D2549030413600 D2549030414000 D2549030414200 D2549030414800 D2549030700000 D2549030700200 D2549030700400 D2549030700800 D2549030701000 D2549030701400 D2549030701600 D2549030702400 D2549040500400 D2549040500600 D2549040500800 D2549040501000 D2549040501200 D2549040501400 D2549040501600 D2549040501800 R225401134-014 R225401134-038 R225401136-006 R225401136-012 R225401136-024 R225401152-010 R225401196-018 R225401196-020 R225401196-022 R225401196-024 R225401196-042 R225401196-064 R225401196-066 R225401196-068 R225401196-070 R225401199-012 R225401602-000 R225401611-000 R225401611-014 R225401611-016 R225401611-018 R225401611-020 R225401627-000 R225401627-004 R225401643-006 R225401643-008 R225401646-002 R225401648-004 R225401648-006 R225401648-008 R225401671-000 R225401673-000 R225401673-002 R225401673-004 R225401673-006 R225401675-000 R225401676-000 R225401683-000 R225401688-000 R225401689-004 R225401691-000 R225401691-002 R225401697-000 R225401803-000

93. Assembly and Installation of the Washbasin Unit

A. General

This task gives you the installation and assembly procedures of the component.

B. Job Set-up Information

(1) Not applicable

C. Procedure

WARNING: **BE CAREFUL WHEN YOU USE SOLVENTS/CLEANING AGENTS, SEALANTS AND OTHER MATERIALS. OBEY THE MATERIAL MANUFACTURER'S INSTRUCTIONS AND THE LOCAL REGULATIONS. MAKE SURE THAT THERE IS A GOOD FLOW OF AIR THROUGH THE WORK AREA. DO NOT BREATHE THE FUMES. DO NOT SMOKE. DO NOT USE THESE MATERIALS NEAR A FLAME, SPARKS OR SOURCES OF HEAT. USE PROTECTIVE CLOTHING, GOGGLES AND GLOVES. IF YOU GET ONE OF THESE MATERIALS ON YOUR SKIN OR IN YOUR EYES, FLUSH IT AWAY WITH A FLOW OF CLEAN WATER. IF YOU GET ONE OF THESE MATERIALS IN YOUR MOUTH, GET IMMEDIATE MEDICAL AID. IN GENERAL, THESE MATERIALS ARE POISONOUS, FLAMMABLE AND SKIN IRRITANTS.**

CAUTION: **DO ALL THE WORK ON A CLEAN, SOFT SURFACE TO PREVENT DAMAGE TO THE COMPONENTS.**

CAUTION: **MAKE SURE THAT ALL THE PARTS ARE CLEAN BEFORE YOU ASSEMBLE THEM.**

SUB TASK 25-41-51-440-092-A01

D2549020300000 D2549020302800 D2549020402600 D2549020403000 D2549020407000 D2549020407800 D2549020409000 D2549020807200 D2549030409000 D2549030410200 D2549030413200 D2549030413600 D2549030700400 D2549030701400 D2549040500400 D2549040501200 D2549040501600 R225401134-014 R225401134-038 R225401152-010 R225401196-018 R225401196-020 R225401196-022 R225401196-024 R225401196-042 R225401196-064 R225401196-066 R225401196-068 R225401196-070 R225401199-012 R225401611-000 R225401611-016 R225401611-018 R225401611-020 R225401675-000

1. Assembly and Installation of the Washbasin Unit (15L-1), (18-1)

   (a) Attach the washbasin unit bracket 15L-240 with the screws 15L-260 and the washers 15L-200 to the lavatory structure.

   (b) Attach the angles 15L-270 with the screws 15L-290 and the washers 15L-200 to the lavatory structure.

   (c) Assemble the washbasin assembly 15L-010 as follows:

      1 Assemble the waste flap assembly 15L-020 as follows:
      a Assemble the hinge assembly 15L-060 as follows:

WARNING: **BE VERY CAREFUL WHEN YOU REMOVE OR INSTALL THE SPRING. BECAUSE THERE IS REMAINING TENSION IN THE SPRING, IT CAN CAUSE YOU INJURY.**

Attach the axle 15L-090 and the springs 15L-100 with the retaining rings 15L-110 to the flap hinge half 15L-070 and to the washbasin hinge half 15L-080.

b Attach the flap 15L-030 with the screws 15L-040 and the washers 15L-050 to the flap hinge half 15L-070.

2 Attach the waste flap assembly 15L-020 with the screws 15L-120, the washers 15L-130 and the clip nuts 15L-140.

(d) Attach the washbasin assembly 15L-010 with the screws 15L-190, 15L-192 and the washers 15L-200 to the lavatory structure.

(e) Attach the washbasin assembly 15L-010 with the screws 15L-210, the washers 15L-220 and the nuts 15L-300 to the angles 15L-270.

(f) Attach the washbasin assembly 15L-010 with the screws 15L-310 and the washers 15L-220 to the washbasin unit bracket 15L-240.

(g) Attach the ground cable in accordance with the Process and Material Specification PMS 01-04-58 to the washbasin assembly 15L-010.

(h) Attach the damper 15L-150 with the washers 15L-170, the bolts 15L-160 and the new cotter pins 15L-180 to waste flap assembly 15L-020 and to the waste chute 18-010.

SUB TASK 25-41-51-440-092-B01

D2549010401800 D2549010402200 D2549010403400 D2549010403600 D2549010403800 D2549010404200 D2549010405400 D2549020400800 D2549020401400 D2549020402000 D2549020403200 D2549020403600 D2549020404000 D2549020406000 D2549020406600 D2549020407400 D2549020408000 D2549020408200 D2549020408600 D2549020408800 D2549020410200 D2549020410400 D2549020410800 D2549020411000 D2549020411400 D2549020411600 D2549020411800 D2549020412000 D2549020412200 D2549020413000 D2549020804400 D2549020809600 D2549030409400 D2549030409600 D2549030410000 D2549030410600 D2549030410800 D2549030411200 D2549030411400 D2549030411600 D2549030412400 D2549030412600 D2549030412800 D2549030414000 D2549030414200 D2549030414800 D2549030700000 D2549030700800 D2549030701000 D2549030701600 D2549040501800 R225401602-000 R225401611-014 R225401627-000 R225401627-004 R225401643-006 R225401643-008

R225401648-004 R225401648-006 R225401648-008 R225401671-000 R225401676-000 R225401688-000 R225401689-004 R225401697-000 R225401803-000

2. Assembly and Installation of the Washbasin Unit (15L-1), (18-1)

(a) Attach the washbasin unit bracket 15L-240 with the screws 15L-260 and the washers 15L-200 to the lavatory structure.

(b) Attach the angles 15L-270 with the screws 15L-290 and the washers 15L-200 to the lavatory structure.

(c) Assemble the washbasin assembly 15L-010 as follows:

1 Assemble the waste flap assembly 15L-020 as follows:

a Assemble the hinge assembly 15L-060 as follows:

WARNING: BE VERY CAREFUL WHEN YOU REMOVE OR INSTALL THE SPRING. BECAUSE THERE IS REMAINING TENSION IN THE SPRING, IT CAN CAUSE YOU INJURY.

Attach the axle 15L-090 and the springs 15L-100 with the retaining rings 15L-110 to the flap hinge half 15L-070 and to the washbasin hinge half 15L-080.

b Attach the flap 15L-030 with the screws 15L-040 and the washers 15L-050 to the flap hinge half 15L-070.

2 Attach the waste flap assembly 15L-020 with the screws 15L-120, the washers 15L-130 and the clip nuts 15L-140.

(d) Attach the washbasin assembly 15L-010 with the screws 15L-190 and the washers 15L-200 to the lavatory structure.

(e) Attach the washbasin assembly 15L-010 with the screws 15L-210, the washers 15L-220 and the nuts 15L-300 to the angles 15L-270.

(f) Attach the washbasin assembly 15L-010 with the screws 15L-310 and the washers 15L-220 to the washbasin unit bracket 15L-240.

(g) Attach the ground cable in accordance with the Process and Material Specification PMS 01-04-58 to the washbasin assembly 15L-010.

(h) Attach the damper 15L-150 with the washers 15L-170, the bolts 15L-160 and the new cotter pins 15L-180 to waste flap assembly 15L-020 and to the waste chute 18-010.

(i) Attach the liquid soap dispenser TBD to the washbasin assembly 15L-010.

NOTE: For further instructions, see CMMV 25-40-01_120C2 (liquid soap dispenser).

(j) Attach the liquid soap dispenser bottle 15L-320 and the liquid soap dispenser support 15L-330 with the washer 15L-335 to the washbasin assembly 15L-010.

SUB TASK 25-41-51-440-092-C01
D2549020401200 D2549020406800 D2549030413000 D2549030700200 D2549030702400 D2549040500600 D2549040500800 D2549040501000 D2549040501400 R225401646-002 R225401673-000 R225401673-002 R225401673-004 R225401673-006 R225401691-000 R225401691-002

3. Assembly and Installation of the Washbasin Unit (15L-1), (18-1)

(a) Attach the washbasin unit bracket 15L-240 with the screws 15L-260 and the washers 15L-200 to the lavatory structure.

(b) Attach the angles 15L-270 with the screws 15L-290 and the washers 15L-200 to the lavatory structure.

(c) Assemble the washbasin assembly 15L-010 as follows:

1 Assemble the waste flap assembly 15L-020 as follows:

a Assemble the hinge assembly 15L-060 as follows:

WARNING: BE VERY CAREFUL WHEN YOU REMOVE OR INSTALL THE SPRING. BECAUSE THERE IS REMAINING TENSION IN THE SPRING, IT CAN CAUSE YOU INJURY.

Attach the axle 15L-090 and the springs 15L-100 with the retaining rings 15L-110 to the flap hinge half 15L-070 and to the washbasin hinge half 15L-080.

b Attach the flap 15L-030 with the screws 15L-040 and the washers 15L-050 to the flap hinge half 15L-070.

2 Attach the waste flap assembly 15L-020 with the screws 15L-120, the washers 15L-130 and the clip nuts 15L-140.

(d) Attach the washbasin assembly 15L-010 with the screws 15L-190 and the washers 15L-200 to the lavatory structure.

(e) Attach the washbasin assembly 15L-010 with the screws 15L-210, the washers 15L-220 and the nuts 15L-300 to the angles 15L-270.

(f) Attach the washbasin assembly 15L-010 with the screws 15L-310 and the washers 15L-220 to the washbasin unit bracket 15L-240.

(g) Attach the ground cable in accordance with the Process and Material Specification PMS 01-04-58 to the washbasin assembly 15L-010.

(h) Attach the damper 15L-150 with the washers 15L-170, the bolts 15L-160 and the new cotter pins 15L-180 to waste flap assembly 15L-020 and to the waste chute 18-010.

(i) Attach the liquid soap dispenser bottle 15L-320 to the liquid soap dispenser support 15L-330.

(j) Attach the liquid soap dispenser bottle 15L-320 and the liquid soap dispenser support 15L-330 to the washbasin assembly 15L-010.

SUB TASK 25-41-51-440-092-D01
D2549020407600 R225401683-000

4. Assembly and Installation of the Washbasin Unit (15L-1), (18-1)

(a) Attach the washbasin unit bracket 15L-240 with the screws 15L-260 and the washers 15L-200 to the lavatory structure.

(b) Attach the angles 15L-270 with the screws 15L-290 and the washers 15L-200 to the lavatory structure.

(c) Assemble the washbasin assembly 15L-010 as follows:

1 Assemble the waste flap assembly 15L-020 as follows:
a Assemble the hinge assembly 15L-060 as follows:

WARNING: BE VERY CAREFUL WHEN YOU REMOVE OR INSTALL THE SPRING. BECAUSE THERE IS REMAINING TENSION IN THE SPRING, IT CAN CAUSE YOU INJURY.

Attach the axle 15L-090 and the springs 15L-100 with the retaining rings 15L-110 to the flap hinge half 15L-070 and to the washbasin hinge half 15L-080.

b Attach the flap 15L-030 with the screws 15L-040 and the washers 15L-050 to the flap hinge half 15L-070.

2 Attach the waste flap assembly 15L-020 with the screws 15L-120, the washers 15L-130 and the clip nuts 15L-140.

(d) Attach the washbasin assembly 15L-010 with the screws 15L-190 and the washers 15L-200 to the lavatory structure.

(e) Attach the washbasin assembly 15L-010 with the screws 15L-210, the washers 15L-220 and the nuts 15L-300 to the angles 15L-270.

(f) Attach the washbasin assembly 15L-010 with the screws 15L-310 and the washers 15L-220 to the washbasin unit bracket 15L-240.

(g) Attach the ground cable in accordance with the Process and Material Specification PMS 01-04-58 to the washbasin assembly 15L-010.

(h) Attach the damper 15L-150 with the washers 15L-170, the bolts 15L-160 and the new cotter pins 15L-180 to waste flap assembly 15L-020 and to the waste chute 18-010.

(i) Attach the perfume dispenser bottle 15L-320 to the liquid soap dispenser support 15L-330.

(j) Attach the perfume dispenser bottle 15L-320 and the liquid soap dispenser supports 15L-330, 15L-331 to the washbasin assembly 15L-010.

SUB TASK 25-41-51-440-092-E01
D2549020403400 D2549030409200 R225401136-006 R225401136-012 R225401136-024

5. Assembly and Installation of the Washbasin Unit (15L-1), (18-1)

(a) Attach the washbasin unit bracket 15L-240 with the screws 15L-260 and the washers 15L-200 to the lavatory structure.

(b) Attach the angles 15L-270 with the screws 15L-290 and the washers 15L-200 to the lavatory structure.

(c) Assemble the washbasin assembly 15L-010 as follows:

1 Assemble the waste flap assembly 15L-020 as follows:
a Assemble the hinge assembly 15L-060 as follows:

WARNING: **BE VERY CAREFUL WHEN YOU REMOVE OR INSTALL THE SPRING. BECAUSE THERE IS REMAINING TENSION IN THE SPRING, IT CAN CAUSE YOU INJURY.**

Attach the axle 15L-090 and the springs 15L-100 with the retaining rings 15L-110 to the flap hinge half 15L-070 and to the washbasin hinge half 15L-080.

b Attach the flap 15L-030 with the screws 15L-040 and the washers 15L-050 to the flap hinge half 15L-070.

2 Attach the waste flap assembly 15L-020 with the screws 15L-120, the washers 15L-130 and the clip nuts 15L-140.

(d) Attach the washbasin assembly 15L-010 with the screws 15L-190 and the washers 15L-200 to the lavatory structure.

(e) Attach the washbasin assembly 15L-010 with the screws 15L-210, the washers 15L-220 and the nuts 15L-300 to the angles 15L-270.

(f) Attach the washbasin assembly 15L-010 with the screws 15L-310 and the washers 15L-220 to the washbasin unit bracket 15L-240.

(g) Attach the ground cable in accordance with the Process and Material Specification PMS 01-04-58 to the washbasin assembly 15L-010.

(h) Attach the damper 15L-150 with the washers 15L-170, the bolts 15L-160 and the new cotter pins 15L-180 to waste flap assembly 15L-020 and to the waste chute 18-010.

(i) Attach the hand lotion dispenser 15L-320 to the liquid soap dispenser support 15L-330.

(j) Attach the hand lotion dispenser 15L-320 and the liquid soap dispenser support 15L-330 to the washbasin assembly 15L-010.

(k) Attach the liquid soap dispenser TBD to the washbasin assembly 15L-010.

NOTE: **For further instructions, see CMMV 25-40-01_120C2 (liquid soap dispenser).**

SUB TASK 25-41-51-440-092-F01
D2549030411800

6. Assembly and Installation of the Washbasin Unit (15L-1), (18-1)

(a) Attach the washbasin unit bracket 15L-240 with the screws 15L-260 and the washers 15L-200 to the lavatory structure.

(b) Attach the angles 15L-270 with the screws 15L-290 and the washers 15L-200 to the lavatory structure.

(c) Assemble the washbasin assembly 15L-010 as follows:

1 Assemble the waste flap assembly 15L-020 as follows:

a Assemble the hinge assembly 15L-060 as follows:

WARNING: BE VERY CAREFUL WHEN YOU REMOVE OR INSTALL THE SPRING. BECAUSE THERE IS REMAINING TENSION IN THE SPRING, IT CAN CAUSE YOU INJURY.

Attach the axle 15L-090 and the springs 15L-100 with the retaining rings 15L-110 to the flap hinge half 15L-070 and to the washbasin hinge half 15L-080.

b Attach the flap 15L-030 with the screws 15L-040 and the washers 15L-050 to the flap hinge half 15L-070.

2 Attach the waste flap assembly 15L-020 with the screws 15L-120, the washers 15L-130 and the clip nuts 15L-140.

(d) Attach the washbasin assembly 15L-010 with the screws 15L-190 and the washers 15L-200 to the lavatory structure.

(e) Attach the washbasin assembly 15L-010 with the screws 15L-210, the washers 15L-220 and the nuts 15L-300 to the angles 15L-270.

(f) Attach the washbasin assembly 15L-010 with the screws 15L-310 and the washers 15L-220 to the washbasin unit bracket 15L-240.

(g) Attach the ground cable in accordance with the Process and Material Specification PMS 01-04-58 to the washbasin assembly 15L-010.

(h) Attach the damper 15L-150 with the washers 15L-170, the bolts 15L-160 and the new cotter pins 15L-180 to waste flap assembly 15L-020 and to the waste chute 18-010.

(i) Attach the liquid soap dispenser TBD to the washbasin assembly 15L-010.

NOTE: For further instructions, see CMMV 25-40-01_DL161 (liquid soap dispenser).

SUB TASK 25-41-51-440-092-G01
D2547161903000

7. Assembly and Installation of the Washbasin Unit (15L-1), (18-1)

(a) Attach the washbasin unit bracket 15L-240 with the screws 15L-260 and the washers 15L-200 to the lavatory structure.

(b) Attach the angles 15L-270 with the screws 15L-290 and the washers 15L-200 to the lavatory structure.

(c) Assemble the washbasin assembly 15L-010 as follows:

1 Assemble the waste flap assembly 15L-020 as follows:
a Assemble the hinge assembly 15L-060 as follows:

WARNING: BE VERY CAREFUL WHEN YOU REMOVE OR INSTALL THE SPRING. BECAUSE THERE IS REMAINING TENSION IN THE SPRING, IT CAN CAUSE YOU INJURY.

Attach the axle 15L-090 and the springs 15L-100 with the retaining rings 15L-110 to the flap hinge half 15L-070 and to the washbasin hinge half 15L-080.

b Attach the flap 15L-030 with the screws 15L-040 and the washers 15L-050 to the flap hinge half 15L-070.

2 Attach the waste flap assembly 15L-020 with the screws 15L-120, the washers 15L-130 and the clip nuts 15L-140.

(d) Attach the washbasin assembly 15L-010 with the screws 15L-190, 15L-195 and the washers 15L-200, 15L-205 to the lavatory structure.

(e) Attach the washbasin assembly 15L-010 with the screws 15L-210, the washers 15L-220 and the nuts 15L-300 to the angles 15L-270.

(f) Attach the washbasin assembly 15L-010 with the screws 15L-310 and the washers 15L-220 to the washbasin unit bracket 15L-240.

(g) Attach the ground cable in accordance with the Process and Material Specification PMS 01-04-58 to the washbasin assembly 15L-010.

(h) Attach the damper 15L-150 with the washers 15L-170, the bolts 15L-160 and the new cotter pins 15L-180 to waste flap assembly 15L-020 and to the waste chute 18-010.

(i) Attach the cosmetics holder 15L-340 with the screws 15L-350, 15L-360 and the washers 15L-225 to the washbasin assembly 15L-010.

(j) Attach the liquid soap dispenser bottle 15L-320 to the foam soap dispenser 15L-330.

(k) Attach the liquid soap dispenser bottle 15L-320 and the foam soap dispenser 15L-330 to the washbasin assembly 15L-010.

TASK 25-41-51-400-811-N01
D2549010401600 D2549010402400 D2549010403200 D2549010404600 D2549010405000 D2549010405200 D2549010405800 D2549020401600 D2549020402400 D2549020409200 D2549020411200 D2549030414600 D2549030700600 R225401624-000 R225401685-000 R225401685-002

94. Assembly and Installation of the Washbasin Unit

A. General

This task gives you the installation and assembly procedures of the component.

B. Job Set-up Information

(1) Not applicable

C. Procedure

WARNING: BE CAREFUL WHEN YOU USE SOLVENTS/CLEANING AGENTS, SEALANTS AND OTHER MATERIALS. OBEY THE MATERIAL MANUFACTURER'S INSTRUCTIONS AND THE LOCAL REGULATIONS. MAKE SURE THAT THERE IS A GOOD FLOW OF AIR THROUGH THE WORK AREA. DO NOT BREATHE THE FUMES. DO NOT SMOKE. DO NOT USE THESE MATERIALS NEAR A FLAME, SPARKS OR SOURCES OF HEAT. USE PROTECTIVE CLOTHING, GOGGLES AND GLOVES. IF YOU GET ONE OF THESE MATERIALS ON YOUR SKIN OR IN YOUR EYES, FLUSH IT AWAY WITH A FLOW OF CLEAN WATER. IF YOU GET ONE OF THESE MATERIALS IN YOUR MOUTH, GET IMMEDIATE MEDICAL AID. IN GENERAL, THESE MATERIALS ARE POISONOUS, FLAMMABLE AND SKIN IRRITANTS.

CAUTION: DO ALL THE WORK ON A CLEAN, SOFT SURFACE TO PREVENT DAMAGE TO THE COMPONENTS.

CAUTION: MAKE SURE THAT ALL THE PARTS ARE CLEAN BEFORE YOU ASSEMBLE THEM.

SUB TASK 25-41-51-440-093-A01
D2549010402400 D2549010403200 D2549010404600 D2549010405000 D2549010405200 D2549010405800 D2549020401600 D2549020402400 D2549020409200 D2549030414600 D2549030700600 R225401624-000 R225401685-000 R225401685-002

1. Assembly and Installation of the Washbasin Unit (15M-1), (18-1)

(a) Attach the washbasin unit bracket 15M-240 with the screws 15M-260 and the washers 15M-200 to the lavatory structure.

(b) Attach the angles 15M-270 with the screws 15M-290 and the washers 15M-200 to the lavatory structure.

(c) Assemble the washbasin assembly 15M-010 as follows:

1 Assemble the waste flap assembly 15M-020 as follows:

a Assemble the hinge assembly 15M-060 as follows:

WARNING: BE VERY CAREFUL WHEN YOU REMOVE OR INSTALL THE SPRING. BECAUSE THERE IS REMAINING TENSION IN THE SPRING, IT CAN CAUSE YOU INJURY.

Attach the axle 15M-090 and the springs 15M-100 with the retaining rings 15M-110 to the flap hinge half 15M-070 and to the washbasin hinge half 15M-080.

b Attach the flap 15M-030 with the screws 15M-040 and the washers 15M-050 to the flap hinge half 15M-070.

2 Attach the waste flap assembly 15M-020 with the screws 15M-120, the washers 15M-130 and the clip nuts 15M-140.

(d) Attach the washbasin assembly 15M-010 with the screws 15M-190 and the washers 15M-200 to the lavatory structure.

(e) Attach the washbasin assembly 15M-010 with the screws 15M-210, the washers 15M-220 and the nuts 15M-300 to the angles 15M-270.

(f) Attach the washbasin assembly 15M-010 with the screws 15M-310 and the washers 15M-220 to the washbasin unit bracket 15M-240.

(g) Attach the ground cable in accordance with the Process and Material Specification PMS 01-04-58 to the washbasin assembly 15M-010.

(h) Attach the damper 15M-150 with the washers 15M-170, the bolts 15M-160 and the new cotter pins 15M-180 to waste flap assembly 15M-020 and to the waste chute 18-010.

(i) Attach the liquid soap dispenser 15M-230 the washbasin assembly 15M-010.

NOTE: For further instructions, see CMMV 25-40-01_120C2 (liquid soap dispenser).

SUB TASK 25-41-51-440-093-B01
D2549020411200

2. Assembly and Installation of the Washbasin Unit (15M-1), (18-1)

(a) Attach the washbasin unit bracket 15M-240 with the screws 15M-260 and the washers 15M-200 to the lavatory structure.

(b) Attach the angles 15M-270 with the screws 15M-290 and the washers 15M-200 to the lavatory structure.

(c) Assemble the washbasin assembly 15M-010 as follows:

1 Assemble the waste flap assembly 15M-020 as follows:
a Assemble the hinge assembly 15M-060 as follows:

WARNING: BE VERY CAREFUL WHEN YOU REMOVE OR INSTALL THE SPRING. BECAUSE THERE IS REMAINING TENSION IN THE SPRING, IT CAN CAUSE YOU INJURY.

Attach the axle 15M-090 and the springs 15M-100 with the retaining rings 15M-110 to the flap hinge half 15M-070 and to the washbasin hinge half 15M-080.

b Attach the flap 15M-030 with the screws 15M-040 and the washers 15M-050 to the flap hinge half 15M-070.

2 Attach the waste flap assembly 15M-020 with the screws 15M-120, the washers 15M-130 and the clip nuts 15M-140.

(d) Attach the washbasin assembly 15M-010 with the screws 15M-190, 15M-191 and the washers 15M-200, 15M-201 to the lavatory structure.

(e) Attach the washbasin assembly 15M-010 with the screws 15M-210, the washers 15M-220 and the nuts 15M-300 to the angles 15M-270.

(f) Attach the washbasin assembly 15M-010 with the screws 15M-310 and the washers 15M-220 to the washbasin unit bracket 15M-240.

(g) Attach the ground cable in accordance with the Process and Material Specification PMS 01-04-58 to the washbasin assembly 15M-010.

(h) Attach the damper 15M-150 with the washers 15M-170, the bolts 15M-160 and the new cotter pins 15M-180 to waste flap assembly 15M-020 and to the waste chute 18-010.

(i) Attach the spacer 15M-340 and the soap dispenser bracket 15M-320 with the screws 15M-330 to the washbasin assembly 15M-010.

SUB TASK 25-41-51-440-093-C01
D2549010401600

3. Assembly and Installation of the Washbasin Unit (15M-1), (18-1)

(a) Attach the washbasin unit bracket 15M-240 with the screws 15M-260 and the washers 15M-200 to the lavatory structure.

(b) Attach the angles 15M-270 with the screws 15M-290 and the washers 15M-200 to the lavatory structure.

(c) Assemble the washbasin assembly 15M-010 as follows:

1 Assemble the waste flap assembly 15M-020 as follows:
a Assemble the hinge assembly 15M-060 as follows:

WARNING: BE VERY CAREFUL WHEN YOU REMOVE OR INSTALL THE SPRING. BECAUSE THERE IS REMAINING TENSION IN THE SPRING, IT CAN CAUSE YOU INJURY.

Attach the axle 15M-090 and the springs 15M-100 with the retaining rings 15M-110 to the flap hinge half 15M-070 and to the washbasin hinge half 15M-080.

b Attach the flap 15M-030 with the screws 15M-040 and the washers 15M-050 to the flap hinge half 15M-070.

2 Attach the waste flap assembly 15M-020 with the screws 15M-120, the washers 15M-130 and the clip nuts 15M-140.

(d) Attach the washbasin assembly 15M-010 with the screws 15M-190 and the washers 15M-200 to the lavatory structure.

(e) Attach the washbasin assembly 15M-010 with the screws 15M-210, the washers 15M-220 and the nuts 15M-300 to the angles 15M-270.

(f) Attach the washbasin assembly 15M-010 with the screws 15M-310 and the washers 15M-220 to the washbasin unit bracket 15M-240.

(g) Attach the ground cable in accordance with the Process and Material Specification PMS 01-04-58 to the washbasin assembly 15M-010.

(h) Attach the damper 15M-150 with the washers 15M-170, the bolts 15M-160 and the new cotter pins 15M-180 to waste flap assembly 15M-020 and to the waste chute 18-010.

(i) Attach the liquid soap dispenser bottle 15M-230 the washbasin assembly 15M-010.

TASK 25-41-51-400-811-P01
D2547160900200 D2547160900400 D2549010401400 D2549010404400 D2549020409600 D2549030414400

95. Assembly and Installation of the Washbasin Unit

A. General

This task gives you the installation and assembly procedures of the component.

B. Job Set-up Information

(1) Not applicable

C. Procedure

WARNING: BE CAREFUL WHEN YOU USE SOLVENTS/CLEANING AGENTS, SEALANTS AND OTHER MATERIALS. OBEY THE MATERIAL MANUFACTURER'S INSTRUCTIONS AND THE LOCAL REGULATIONS. MAKE SURE THAT THERE IS A GOOD FLOW OF AIR THROUGH THE WORK AREA. DO NOT BREATHE THE FUMES. DO NOT SMOKE. DO NOT USE THESE MATERIALS NEAR A FLAME, SPARKS OR SOURCES OF HEAT. USE PROTECTIVE CLOTHING, GOGGLES AND GLOVES. IF YOU GET ONE OF THESE MATERIALS ON YOUR SKIN OR IN YOUR EYES, FLUSH IT AWAY WITH A FLOW OF CLEAN WATER. IF YOU GET ONE OF THESE MATERIALS IN YOUR MOUTH, GET IMMEDIATE MEDICAL AID. IN GENERAL, THESE MATERIALS ARE POISONOUS, FLAMMABLE AND SKIN IRRITANTS.

CAUTION: DO ALL THE WORK ON A CLEAN, SOFT SURFACE TO PREVENT DAMAGE TO THE COMPONENTS.

CAUTION: MAKE SURE THAT ALL THE PARTS ARE CLEAN BEFORE YOU ASSEMBLE THEM.

SUB TASK 25-41-51-440-094-A01

1. Assembly and Installation of the Washbasin Unit (15N-1), (18-1)

(a) Attach the washbasin unit bracket 15N-240 with the screws 15N-260 and the washers 15N-200 to the lavatory structure.

(b) Attach the angles 15N-270 with the screws 15N-290 and the washers 15N-200 to the lavatory structure.

(c) Assemble the washbasin assembly 15N-010 as follows:

1 Assemble the waste flap assembly 15N-020 as follows:

a Assemble the hinge assembly 15N-060 as follows:

WARNING: BE VERY CAREFUL WHEN YOU REMOVE OR INSTALL THE SPRING. BECAUSE THERE IS REMAINING TENSION IN THE SPRING, IT CAN CAUSE YOU INJURY.

Attach the axle 15N-090 and the springs 15N-100 with the retaining rings 15N-110 to the flap hinge half 15N-070 and to the washbasin hinge half 15N-080.

b Attach the flap 15N-030 with the screws 15N-040 and the washers 15N-050 to the flap hinge half 15N-070.

2 Attach the waste flap assembly 15N-020 with the screws 15N-120, the washers 15N-130 and the clip nuts 15N-140.

(d) Attach the washbasin assembly 15N-010 with the screws 15N-190 and the washers 15N-200 to the lavatory structure.

(e) Attach the washbasin assembly 15N-010 with the screws 15N-210, the washers 15N-220 and the nuts 15N-300 to the angles 15N-270.

(f) Attach the washbasin assembly 15N-010 with the screws 15N-310 and the washers 15N-220 to the washbasin unit bracket 15N-240.

(g) Attach the ground cable in accordance with the Process and Material Specification PMS 01-04-58 to the washbasin assembly 15N-010.

(h) Attach the damper 15N-150 with the washers 15N-170, the bolts 15N-160 and the new lock pins 15N-180 to waste flap assembly 15N-020 and to the waste chute 18-010.

(i) Attach the liquid soap dispenser assembly 15N-230 to the washbasin assembly 15N-010.

NOTE: For further instructions, see CMMV 25-40-03_120C2 (liquid soap dispenser assembly).

TASK 25-41-51-400-811-Q01
D2549020409400

96. Assembly and Installation of the Washbasin Unit

A. General

This task gives you the installation and assembly procedures of the component.

B. Job Set-up Information

(1) Not applicable

C. Procedure

WARNING: BE CAREFUL WHEN YOU USE SOLVENTS/CLEANING AGENTS, SEALANTS AND OTHER MATERIALS. OBEY THE MATERIAL MANUFACTURER'S INSTRUCTIONS AND THE LOCAL REGULATIONS. MAKE SURE THAT THERE IS A GOOD FLOW OF AIR THROUGH THE WORK AREA. DO NOT BREATHE THE FUMES. DO NOT SMOKE. DO NOT USE THESE MATERIALS NEAR A FLAME, SPARKS OR SOURCES OF HEAT. USE PROTECTIVE CLOTHING, GOGGLES AND GLOVES. IF YOU GET ONE OF THESE MATERIALS ON YOUR SKIN OR IN YOUR EYES, FLUSH IT AWAY WITH A FLOW OF CLEAN WATER. IF YOU GET ONE OF THESE MATERIALS IN YOUR MOUTH, GET IMMEDIATE MEDICAL AID. IN GENERAL, THESE MATERIALS ARE POISONOUS, FLAMMABLE AND SKIN IRRITANTS.

CAUTION: DO ALL THE WORK ON A CLEAN, SOFT SURFACE TO PREVENT DAMAGE TO THE COMPONENTS.

CAUTION: MAKE SURE THAT ALL THE PARTS ARE CLEAN BEFORE YOU ASSEMBLE THEM.

SUB TASK 25-41-51-440-095-A01

1. Assembly and Installation of the Washbasin Unit (15P-1), (18-1)

(a) Attach the washbasin unit bracket 15P-240 with the screws 15P-260 and the washers 15P-200 to the lavatory structure.

(b) Attach the angles 15P-270 with the screws 15P-290 and the washers 15P-200 to the lavatory structure.

(c) Assemble the washbasin assembly 15P-010 as follows:

1 Assemble the waste flap assembly 15P-020 as follows:
a Assemble the hinge assembly 15P-060 as follows:

WARNING: **BE VERY CAREFUL WHEN YOU REMOVE OR INSTALL THE SPRING. BECAUSE THERE IS REMAINING TENSION IN THE SPRING, IT CAN CAUSE YOU INJURY.**

Attach the axle 15P-090 and the springs 15P-100 with the retaining rings 15P-110 to the flap hinge half 15P-070 and to the washbasin hinge half 15P-080.

b Attach the flap 15P-030 with the screws 15P-040 and the washers 15P-050 to the flap hinge half 15P-070.

2 Attach the waste flap assembly 15P-020 with the screws 15P-120, the washers 15P-130 and the clip nuts 15P-140.

(d) Attach the washbasin assembly 15P-010 with the screws 15P-190 and the washers 15P-200 to the lavatory structure.

(e) Attach the washbasin assembly 15P-010 with the screws 15P-210, the washers 15P-220 and the nuts 15P-300 to the angles 15P-270.

(f) Attach the washbasin assembly 15P-010 with the screws 15P-230 and the washers 15P-220 to the washbasin unit bracket 15P-240.

(g) Attach the ground cable in accordance with the Process and Material Specification PMS 01-04-58 to the washbasin assembly 15P-010.

(h) Attach the damper 15P-150 with the washers 15P-170, the bolts 15P-160 and the new cotter pins 15P-180 to waste flap assembly 15P-020 and to the waste chute 18-010.

(i) Attach the soap dispenser foot 15P-330 with the screw 15P-340, the washer 15P-350 and the nut 15P-360 to the washbasin assembly 15P-010.

(j) Attach the soap dispenser holder 15P-310 with the screws 15P-320 to the soap dispenser foot 15P-330.

TASK 25-41-51-400-811-R01
D2549010406000 D2549010406200 D2549010406400 D2549010406800 D2549010407000 D2549020300400 D2549020300800 D2549020301000 D2549020301600 D2549020302000 D2549020412400 D2549020412600 D2549020412800 D2549020413200 D2549020413600 D2549020413800 D2549020414000 D2549020414200 D2549020414600 D2549030702000 D2549030702200 D2549030702800 D2549030703000 D2549030703200 D2549030703400 D2549030703600 D2549030703800 D2549030704000 D2549030704600 D2549030704800 D2549030705200 D2549030705600 D2549040502000 R225401136-008 R225401136-014 R225401627-002 R225401671-002 R225401689-006 R225401697-002 R225401803-002 R225401811-000

97. Assembly and Installation of the Washbasin Unit

A. General

This task gives you the installation and assembly procedures of the component.

B. Job Set-up Information

(1) Not applicable

C. Procedure

WARNING: BE CAREFUL WHEN YOU USE SOLVENTS/CLEANING AGENTS, SEALANTS AND OTHER MATERIALS. OBEY THE MATERIAL MANUFACTURER'S INSTRUCTIONS AND THE LOCAL REGULATIONS. MAKE SURE THAT THERE IS A GOOD FLOW OF AIR THROUGH THE WORK AREA. DO NOT BREATHE THE FUMES. DO NOT SMOKE. DO NOT USE THESE MATERIALS NEAR A FLAME, SPARKS OR SOURCES OF HEAT. USE PROTECTIVE CLOTHING, GOGGLES AND GLOVES. IF YOU GET ONE OF THESE MATERIALS ON YOUR SKIN OR IN YOUR EYES, FLUSH IT AWAY WITH A FLOW OF CLEAN WATER. IF YOU GET ONE OF THESE MATERIALS IN YOUR MOUTH, GET IMMEDIATE MEDICAL AID. IN GENERAL, THESE MATERIALS ARE POISONOUS, FLAMMABLE AND SKIN IRRITANTS.

CAUTION: DO ALL THE WORK ON A CLEAN, SOFT SURFACE TO PREVENT DAMAGE TO THE COMPONENTS.

CAUTION: MAKE SURE THAT ALL THE PARTS ARE CLEAN BEFORE YOU ASSEMBLE THEM.

SUB TASK 25-41-51-440-096-A01
D2549010406000 D2549010406200 D2549010406400 D2549010406800 D2549010407000 D2549020300400 D2549020300800 D2549020301000 D2549020301600 D2549020302000 D2549020412400 D2549020412600 D2549020412800 D2549020413200 D2549020413800 D2549020414000

D2549020414200 D2549020414600 D2549030702000 D2549030702800 D2549030703000 D2549030703200 D2549030703400 D2549030703600 D2549030703800 D2549030704000 D2549030704600 D2549030704800 D2549030705200 D2549030705600 D2549040502000 R225401627-002 R225401671-002 R225401689-006 R225401697-002 R225401803-002 R225401811-000

1. Assembly and Installation of the Washbasin Unit (15Q-1), (18-1)

(a) Attach the washbasin unit bracket 15Q-220 with the screws 15Q-240 and the washers 15Q-210 to the lavatory structure.

(b) Attach the angles 15Q-250 with the screws 15Q-270 and the washers 15Q-200 to the lavatory structure.

(c) Assemble the washbasin assembly 15Q-010 as follows:

1 Assemble the waste flap assembly 15Q-020 as follows:

a Assemble the hinge assembly 15Q-060 as follows:

WARNING: BE VERY CAREFUL WHEN YOU REMOVE OR INSTALL THE SPRING. BECAUSE THERE IS REMAINING TENSION IN THE SPRING, IT CAN CAUSE YOU INJURY.

Attach the axle 15Q-090 and the springs 15Q-100 with the retaining rings 15Q-110 to the flap hinge half 15Q-070 and to the washbasin hinge half 15Q-080.

b Attach the flap 15Q-030 with the screws 15Q-040 and the washers 15Q-050 to the flap hinge half 15Q-070.

2 Attach the waste flap assembly 15Q-020 with the screws 15Q-120, the washers 15Q-130 and the clip nuts 15Q-140.

(d) Attach the washbasin assembly 15Q-010 with the screws 15Q-190 and the washers 15Q-200 to the lavatory structure.

(e) Attach the washbasin assembly 15Q-010 with the screws 15Q-195, the washers 15Q-210 and the nuts 15Q-280 to the angles 15Q-250.

(f) Attach the washbasin assembly 15Q-010 with the screws 15Q-215 and the washers 15Q-210 to the washbasin unit bracket 15Q-220.

(g) Attach the ground cable in accordance with the Process and Material Specification PMS 01-04-58 to the washbasin assembly 15Q-010.

(h) Attach the damper 15Q-150 with the washers 15Q-170, the bolts 15Q-160 and the new cotter pins 15Q-180 to waste flap assembly 15Q-020 and to the waste chute 18-010.

(i) Assemble the liquid soap dispenser assembly 15Q-290 as follows:

NOTE: For further instructions, see CMMV 25-40-99_C5270 (liquid soap dispenser assembly).

1 Assemble the table mounted liquid soap dispenser head assembly 15Q-300 as follows:
a Attach the nut 15Q-340, the seal 15Q-330 and the pump 15Q-310.

2 Attach the liquid soap dispenser hose 15Q-370 and the knurled nut 15Q-350 to the table mounted liquid soap dispenser head assembly 15Q-300.

3 Attach the liquid soap dispenser bottle assembly 15Q-360 to the knurled nut 15Q-350.

(j) Attach the liquid soap dispenser assembly 15Q-290 to the washbasin assembly 15Q-010.

(k) Attach the hand lotion dispenser 15Q-380 and the liquid soap dispenser support 15Q-390 with the washer 15Q-400 to the washbasin assembly 15Q-010.

SUB TASK 25-41-51-440-096-B01
D2549020413600 D2549030702200 R225401136-008 R225401136-014

2. Assembly and Installation of the Washbasin Unit (15Q-1), (18-1)

(a) Attach the washbasin unit bracket 15Q-220 with the screws 15Q-240 and the washers 15Q-210 to the lavatory structure.

(b) Attach the angles 15Q-250 with the screws 15Q-270 and the washers 15Q-200 to the lavatory structure.

(c) Assemble the washbasin assembly 15Q-010 as follows:

1 Assemble the waste flap assembly 15Q-020 as follows:
a Assemble the hinge assembly 15Q-060 as follows:

WARNING: **BE VERY CAREFUL WHEN YOU REMOVE OR INSTALL THE SPRING. BECAUSE THERE IS REMAINING TENSION IN THE SPRING, IT CAN CAUSE YOU INJURY.**

Attach the axle 15Q-090 and the springs 15Q-100 with the retaining rings 15Q-110 to the flap hinge half 15Q-070 and to the washbasin hinge half 15Q-080.

b Attach the flap 15Q-030 with the screws 15Q-040 and the washers 15Q-050 to the flap hinge half 15Q-070.

2 Attach the waste flap assembly 15Q-020 with the screws 15Q-120, the washers 15Q-130 and the clip nuts 15Q-140.

(d) Attach the washbasin assembly 15Q-010 with the screws 15Q-190 and the washers 15Q-200 to the lavatory structure.

(e) Attach the washbasin assembly 15Q-010 with the screws 15Q-195, the washers 15Q-210 and the nuts 15Q-280 to the angles 15Q-250.

(f) Attach the washbasin assembly 15Q-010 with the screws 15Q-215 and the washers 15Q-210 to the washbasin unit bracket 15Q-220.

(g) Attach the ground cable in accordance with the Process and Material Specification PMS 01-04-58 to the washbasin assembly 15Q-010.

(h) Attach the damper 15Q-150 with the washers 15Q-170, the bolts 15Q-160 and the new cotter pins 15Q-180 to waste flap assembly 15Q-020 and to the waste chute 18-010.

(i) Assemble the liquid soap dispenser assembly 15Q-290 as follows:

NOTE: **For further instructions, see CMMV 25-40-99_C5270 (liquid soap dispenser assembly).**

1 Assemble the table mounted liquid soap dispenser head assembly 15Q-300 as follows:
a Attach the nut 15Q-340, the seal 15Q-330 and the pump 15Q-310.

2 Attach the liquid soap dispenser hose 15Q-370 and the knurled nut 15Q-350 to the table mounted liquid soap dispenser head assembly 15Q-300.

3 Attach the liquid soap dispenser bottle assembly 15Q-360 to the knurled nut 15Q-350.

(j) Attach the liquid soap dispenser assembly 15Q-290 to the washbasin assembly 15Q-010.

(k) Attach the hand lotion dispenser 15Q-380 to the liquid soap dispenser support 15Q-390.

(l) Attach the hand lotion dispenser 15Q-380 and the liquid soap dispenser support 15Q-390 to the washbasin assembly 15Q-010.

TASK 25-41-51-400-811-S01
D2549010405600 D2549020413400 D2549020414800 D2549030701800 D2549030702600
R225401808-000 R225401814-000

98. Assembly and Installation of the Washbasin Unit

A. General

This task gives you the installation and assembly procedures of the component.

B. Job Set-up Information

(1) Not applicable

C. Procedure

WARNING: BE CAREFUL WHEN YOU USE SOLVENTS/CLEANING AGENTS, SEALANTS AND OTHER MATERIALS. OBEY THE MATERIAL MANUFACTURER'S INSTRUCTIONS AND THE LOCAL REGULATIONS. MAKE SURE THAT THERE IS A GOOD FLOW OF AIR THROUGH THE WORK AREA. DO NOT BREATHE THE FUMES. DO NOT SMOKE. DO NOT USE THESE MATERIALS NEAR A FLAME, SPARKS OR SOURCES OF HEAT. USE PROTECTIVE CLOTHING, GOGGLES AND GLOVES. IF YOU GET ONE OF THESE MATERIALS ON YOUR SKIN OR IN YOUR EYES, FLUSH IT AWAY WITH A FLOW OF CLEAN WATER. IF YOU GET ONE OF THESE MATERIALS IN YOUR MOUTH, GET IMMEDIATE MEDICAL AID. IN GENERAL, THESE MATERIALS ARE POISONOUS, FLAMMABLE AND SKIN IRRITANTS.

CAUTION: DO ALL THE WORK ON A CLEAN, SOFT SURFACE TO PREVENT DAMAGE TO THE COMPONENTS.

CAUTION: MAKE SURE THAT ALL THE PARTS ARE CLEAN BEFORE YOU ASSEMBLE THEM.

SUB TASK 25-41-51-440-097-A01
D2549020413400 D2549030702600

1. Assembly and Installation of the Washbasin Unit (15R-1), (18-1)

(a) Attach the washbasin unit bracket 15R-290 with the screws 15R-320 and the washers 15R-240 to the lavatory structure.

(b) Attach the angles 15R-270 with the screws 15R-260 and the washers 15R-210 to the lavatory structure.

(c) Assemble the washbasin assembly 15R-010 as follows:

1 Attach the brackets 15R-170 with the screws 15R-180 and the washers 15R-190 to the washbasin 15R-020.

2 Assemble the waste flap assembly 15R-030 as follows:
a Assemble the hinge assembly 15R-070 as follows:

WARNING: BE VERY CAREFUL WHEN YOU REMOVE OR INSTALL THE SPRING. BECAUSE THERE IS REMAINING TENSION IN THE SPRING, IT CAN CAUSE YOU INJURY.

Attach the axle 15R-100 and the springs 15R-110 with the retaining rings 15R-120 to the flap hinge half 15R-080 and to the washbasin hinge half 15R-090.

b Attach the flap 15R-040 with the screws 15R-050 and the washers 15R-060 to the flap hinge half 15R-080.

3 Attach the waste flap assembly 15R-030 with the screws 15R-130, the washers 15R-140 and the clip nuts 15R-150 to the washbasin 15R-020.

(d) Attach the washbasin assembly 15R-010 with the screws 15R-200 and the washers 15R-210 to the lavatory structure.

(e) Attach the washbasin assembly 15R-010 with the screws 15R-230, the washers 15R-240 and the nuts 15R-250 to the angles 15R-270.

(f) Attach the washbasin assembly 15R-010 with the screws 15R-310 and the washers 15R-240 to the washbasin unit bracket 15R-290.

(g) Attach the ground cable in accordance with the Process and Material Specification PMS 01-04-58 to the washbasin assembly 15R-010.

(h) Attach the damper 15R-330 with the washers 15R-350, the bolts 15R-340 and the new cotter pins 15R-360 to waste flap assembly 15R-030 and to the waste chute 18-010.

SUB TASK 25-41-51-440-097-B01
D2549020414800

2. Assembly and Installation of the Washbasin Unit (15R-1), (18-1)

(a) Attach the washbasin unit bracket 15R-290 with the screws 15R-320 and the washers 15R-240 to the lavatory structure.

(b) Attach the angles 15R-270 with the screws 15R-260 and the washers 15R-210 to the lavatory structure.

(c) Assemble the washbasin assembly 15R-010 as follows:

1 Attach the brackets 15R-170 with the screws 15R-180 and the washers 15R-190 to the washbasin 15R-020.

2 Assemble the waste flap assembly 15R-030 as follows:
a Assemble the hinge assembly 15R-070 as follows:

WARNING: BE VERY CAREFUL WHEN YOU REMOVE OR INSTALL THE SPRING. BECAUSE THERE IS REMAINING TENSION IN THE SPRING, IT CAN CAUSE YOU INJURY.

Attach the axle 15R-100 and the springs 15R-110 with the retaining rings 15R-120 to the flap hinge half 15R-080 and to the washbasin hinge half 15R-090.

b Attach the flap 15R-040 with the screws 15R-050 and the washers 15R-060 to the flap hinge half 15R-080.

3 Attach the waste flap assembly 15R-030 with the screws 15R-130, the washers 15R-140 and the clip nuts 15R-150 to the washbasin 15R-020.

(d) Attach the washbasin assembly 15R-010 with the screws 15R-200 and the washers 15R-210 to the lavatory structure.

(e) Attach the washbasin assembly 15R-010 with the screws 15R-230, the washers 15R-240 and the nuts 15R-250 to the angles 15R-270.

(f) Attach the washbasin assembly 15R-010 with the screws 15R-310 and the washers 15R-240 to the washbasin unit bracket 15R-290.

(g) Attach the ground cable in accordance with the Process and Material Specification PMS 01-04-58 to the washbasin assembly 15R-010.

(h) Attach the damper 15R-330 with the washers 15R-350, the bolts 15R-340 and the new cotter pins 15R-360 to waste flap assembly 15R-030 and to the waste chute 18-010.

(i) Assemble the liquid soap dispenser assembly 15R-380 as follows:

NOTE: For further instructions, see CMMV 25-40-99_C5270 (liquid soap dispenser assembly).

1 Assemble the table mounted liquid soap dispenser head assembly 15R-390 as follows:
a Attach the nut 15R-430, the seal 15R-420 and the pump 15R-400.

2 Attach the liquid soap dispenser hose 15R-460 and the knurled nut 15R-440 to the table mounted liquid soap dispenser head assembly 15R-390.

3 Attach the liquid soap dispenser bottle assembly 15R-450 to the knurled nut 15R-440.

(j) Attach the liquid soap dispenser assembly 15R-380 to the washbasin 15R-020.

SUB TASK 25-41-51-440-097-C01
D2549010405600 D2549030701800 R225401808-000 R225401814-000

3. Assembly and Installation of the Washbasin Unit (15R-1), (18-1)

(a) Attach the washbasin unit bracket 15R-290 with the screws 15R-320 and the washers 15R-240 to the lavatory structure.

(b) Attach the angles 15R-270 with the screws 15R-260 and the washers 15R-210 to the lavatory structure.

(c) Assemble the washbasin assembly 15R-010 as follows:

1 Attach the brackets 15R-170 with the screws 15R-180 and the washers 15R-190 to the washbasin 15R-020.

2 Assemble the waste flap assembly 15R-030 as follows:
a Assemble the hinge assembly 15R-070 as follows:

WARNING: BE VERY CAREFUL WHEN YOU REMOVE OR INSTALL THE SPRING. BECAUSE THERE IS REMAINING TENSION IN THE SPRING, IT CAN CAUSE YOU INJURY.

Attach the axle 15R-100 and the springs 15R-110 with the retaining rings 15R-120 to the flap hinge half 15R-080 and to the washbasin hinge half 15R-090.

b Attach the flap 15R-040 with the screws 15R-050 and the washers 15R-060 to the flap hinge half 15R-080.

3 Attach the waste flap assembly 15R-030 with the screws 15R-130, the washers 15R-140 and the clip nuts 15R-150 to the washbasin 15R-020.

(d) Attach the washbasin assembly 15R-010 with the screws 15R-200 and the washers 15R-210 to the lavatory structure.

(e) Attach the washbasin assembly 15R-010 with the screws 15R-230, the washers 15R-240 and the nuts 15R-250 to the angles 15R-270.

(f) Attach the washbasin assembly 15R-010 with the screws 15R-310 and the washers 15R-240 to the washbasin unit bracket 15R-290.

(g) Attach the ground cable in accordance with the Process and Material Specification PMS 01-04-58 to the washbasin assembly 15R-010.

(h) Attach the damper 15R-330 with the washers 15R-350, the bolts 15R-340 and the new cotter pins 15R-360 to waste flap assembly 15R-030 and to the waste chute 18-010.

(i) Attach the liquid soap dispenser bottle 15R-220 to the liquid soap dispenser support 15R-370.

(j) Attach the liquid soap dispenser bottle 15R-220 and the liquid soap dispenser support 15R-370 to the washbasin 15R-020.

TASK 25-41-51-400-811-T01
D2549020300600 D2549020301800 D2549030704200 D2549030704400

99. Assembly and Installation of the Washbasin Unit

A. General

This task gives you the installation and assembly procedures of the component.

B. Job Set-up Information

(1) Not applicable

C. Procedure

WARNING: BE CAREFUL WHEN YOU USE SOLVENTS/CLEANING AGENTS, SEALANTS AND OTHER MATERIALS. OBEY THE MATERIAL MANUFACTURER'S INSTRUCTIONS AND THE LOCAL REGULATIONS. MAKE SURE THAT THERE IS A GOOD FLOW OF AIR THROUGH THE WORK AREA. DO NOT BREATHE THE FUMES. DO NOT SMOKE. DO NOT USE THESE MATERIALS NEAR A FLAME, SPARKS OR SOURCES OF HEAT. USE PROTECTIVE CLOTHING, GOGGLES AND GLOVES. IF YOU GET ONE OF THESE MATERIALS ON YOUR SKIN OR IN YOUR EYES, FLUSH IT AWAY WITH A FLOW OF CLEAN WATER. IF YOU GET ONE OF THESE MATERIALS IN YOUR MOUTH, GET IMMEDIATE MEDICAL AID. IN GENERAL, THESE MATERIALS ARE POISONOUS, FLAMMABLE AND SKIN IRRITANTS.

CAUTION: DO ALL THE WORK ON A CLEAN, SOFT SURFACE TO PREVENT DAMAGE TO THE COMPONENTS.

CAUTION: MAKE SURE THAT ALL THE PARTS ARE CLEAN BEFORE YOU ASSEMBLE THEM.

SUB TASK 25-41-51-440-098-A01

1. Assembly and Installation of the Washbasin Unit (15S-1), (18-1)

(a) Attach the washbasin bracket 15S-160 with the screws 15S-140 and the washers 15S-150 to the lavatory structure.

(b) Attach the angles 15S-170 with the screws 15S-140 and the washers 15S-130 to the lavatory structure.

(c) Attach the bracket 15S-220 with the screw 15S-120 and the washer 15S-150 to the lavatory structure.

(d) Assemble the washbasin assembly 15S-010 as follows:

1 Assemble the flap assembly 15S-040 as follows:
a

WARNING: BE VERY CAREFUL WHEN YOU REMOVE OR INSTALL THE SPRING. BECAUSE THERE IS REMAINING TENSION IN THE SPRING, IT CAN CAUSE YOU INJURY.

Attach the flap 15S-050 and the springs 15S-080 with the pins 15S-060 and the splints 15S-070.

2 Attach the flap assembly 15S-040 with the screws 15S-090, the washers 15S-100 and the nuts 15S-110 to the washbasin 15S-030.

(e) Attach the rear cover 15S-020 and the washbasin assembly 15S-010 with the screws 15S-120 and the washers 15S-130 to the lavatory structure.

(f) Attach the washbasin assembly 15S-010 and the brackets 15S-220, 15S-240 with the screws 15S-120 and the washers 15S-150 to the angles 15S-170.

(g) Attach the washbasin assembly 15S-010 with the screw 15S-190, the washer 15S-200 and the nut 15S-210 to the washbasin bracket 15S-160.

(h) Attach the ground cable in accordance with the Process and Material Specification PMS 01-04-58 to the washbasin assembly 15S-010.

(i) Assemble the liquid soap dispenser assembly 15S-260 as follows:

NOTE: For further instructions, see CMMV 25-40-99_C5270 (liquid soap dispenser assembly).

1 Assemble the table mounted liquid soap dispenser head assembly 15S-270 as follows:
a Attach the nut 15S-310, the seal 15S-300 and the pump 15S-280.

2 Attach the liquid soap dispenser hose 15S-340 and the knurled nut 15S-320 to the table mounted liquid soap dispenser head assembly 15S-270.

3 Attach the liquid soap dispenser bottle assembly 15S-330 to the knurled nut 15S-320.

(j) Attach the liquid soap dispenser assembly 15S-260 to the washbasin 15S-030.

TASK 25-41-51-400-811-U01
D2549030610200

100. Assembly and Installation of the Washbasin Unit

A. General

This task gives you the installation and assembly procedures of the component.

B. Job Set-up Information

(1) Not applicable

C. Procedure

WARNING: BE CAREFUL WHEN YOU USE SOLVENTS/CLEANING AGENTS, SEALANTS AND OTHER MATERIALS. OBEY THE MATERIAL MANUFACTURER'S INSTRUCTIONS AND THE LOCAL REGULATIONS. MAKE SURE THAT THERE IS A GOOD FLOW OF AIR THROUGH THE WORK AREA. DO NOT BREATHE THE FUMES. DO NOT SMOKE. DO NOT USE THESE MATERIALS NEAR A FLAME, SPARKS OR SOURCES OF HEAT. USE PROTECTIVE CLOTHING, GOGGLES AND GLOVES. IF YOU GET ONE OF THESE MATERIALS ON YOUR SKIN OR IN YOUR EYES, FLUSH IT AWAY WITH A FLOW OF CLEAN WATER. IF YOU GET ONE OF THESE MATERIALS IN YOUR MOUTH, GET IMMEDIATE MEDICAL AID. IN GENERAL, THESE MATERIALS ARE POISONOUS, FLAMMABLE AND SKIN IRRITANTS.

CAUTION: DO ALL THE WORK ON A CLEAN, SOFT SURFACE TO PREVENT DAMAGE TO THE COMPONENTS.

CAUTION: MAKE SURE THAT ALL THE PARTS ARE CLEAN BEFORE YOU ASSEMBLE THEM.

SUB TASK 25-41-51-440-099-A01

1. Assembly and Installation of the Washbasin Unit (15T-1), (18-1)

(a) Attach the washbasin unit bracket 15T-190 with the screws 15T-260 and the washers 15T-410 to the lavatory structure.

(b) Attach the fittings 15T-370 with the screws 15T-250 and the washers 15T-380 to the lavatory structure.

(c) Assemble the washbasin assembly 15T-010 as follows:

1 Attach the screws 15T-170 and the washers 15T-180 to the washbasin 15T-020.

2 Assemble the waste flap assembly 15T-040 as follows:

a Assemble the hinge assembly 15T-080 as follows:

WARNING: BE VERY CAREFUL WHEN YOU REMOVE OR INSTALL THE SPRING. BECAUSE THERE IS REMAINING TENSION IN THE SPRING, IT CAN CAUSE YOU INJURY.

Attach the axle 15T-110 and the springs 15T-120 with the retaining rings 15T-130 to the flap hinge half 15T-090 and to the washbasin hinge half 15T-100.

b Attach the flap 15T-050 with the screws 15T-060 and the washers 15T-070 to the flap hinge half 15T-090.

3 Attach the waste flap assembly 15T-040 with the screws 15T-140, the washers 15T-150 and the clip nuts 15T-160 to the washbasin 15T-020.

(d) Attach the washbasin assembly 15T-010 with the screws 15T-270, 15T-420 and the washers 15T-380, 15T-410 to the lavatory structure.

(e) Attach the washbasin assembly 15T-010 with the screws 15T-270, the washers 15T-380 and the nuts 15T-280 to the fittings 15T-370.

(f) Attach the washbasin assembly 15T-010 with the screws 15T-270 and the washers 15T-410 to the washbasin unit bracket 15T-190.

(g) Attach the ground cable in accordance with the Process and Material Specification PMS 01-04-58 to the washbasin assembly 15T-010.

(h) Attach the damper 15T-210 with the washers 15T-230, the bolts 15T-220 and the new lock pins 15T-240 to waste flap assembly 15T-040 and to the waste chute 18-010.

(i) Attach the vase 15T-290 with the screws 15T-300 to the washbasin 15T-020.

(j) Attach the spacer 15T-390 and the cosmetics holder 15T-310 with the screws 15T-320 and the washers 15T-400 to the washbasin 15T-020.

(k) Attach the soap dispenser holder 15T-330 with the screws 15T-340, the washers 15T-350 and the nuts 15T-360 to the washbasin 15T-020.

TASK 25-41-51-400-811-V01
D2549020712000 D2549020712600 D2549030701200

101. Assembly and Installation of the Washbasin Unit

A. General

This task gives you the installation and assembly procedures of the component.

B. Job Set-up Information

(1) Not applicable

C. Procedure

WARNING: BE CAREFUL WHEN YOU USE SOLVENTS/CLEANING AGENTS, SEALANTS AND OTHER MATERIALS. OBEY THE MATERIAL MANUFACTURER'S INSTRUCTIONS AND THE LOCAL REGULATIONS. MAKE SURE THAT THERE IS A GOOD FLOW OF AIR THROUGH THE WORK AREA. DO NOT BREATHE THE FUMES. DO NOT SMOKE. DO NOT USE THESE MATERIALS NEAR A FLAME, SPARKS OR SOURCES OF HEAT. USE PROTECTIVE CLOTHING, GOGGLES AND GLOVES. IF YOU GET ONE OF THESE MATERIALS ON YOUR SKIN OR IN YOUR EYES, FLUSH IT AWAY WITH A FLOW OF CLEAN WATER. IF YOU GET ONE OF THESE MATERIALS IN YOUR MOUTH, GET IMMEDIATE MEDICAL AID. IN GENERAL, THESE MATERIALS ARE POISONOUS, FLAMMABLE AND SKIN IRRITANTS.

CAUTION: DO ALL THE WORK ON A CLEAN, SOFT SURFACE TO PREVENT DAMAGE TO THE COMPONENTS.

CAUTION: MAKE SURE THAT ALL THE PARTS ARE CLEAN BEFORE YOU ASSEMBLE THEM.

SUB TASK 25-41-51-440-134-A01

1. Assembly and Installation of the Washbasin Unit (15U-1), (18-1)

(a) Attach the washbasin unit bracket 15U-190 with the screws 15U-260 and the washers 15U-410 to the lavatory structure.

(b) Attach the fittings 15U-370 with the screws 15U-250 and the washers 15U-380 to the lavatory structure.

(c) Assemble the washbasin assembly 15U-010 as follows:

1 Attach the screws 15U-170 and the washers 15U-180 to the washbasin 15U-020.

2 Assemble the waste flap assembly 15U-040 as follows:

a Assemble the hinge assembly 15U-080 as follows:

WARNING: BE VERY CAREFUL WHEN YOU REMOVE OR INSTALL THE SPRING. BECAUSE THERE IS REMAINING TENSION IN THE SPRING, IT CAN CAUSE YOU INJURY.

Attach the axle 15U-110 and the springs 15U-120 with the retaining rings 15U-130 to the flap hinge half 15U-090 and to the washbasin hinge half 15U-100.

b Attach the flap 15U-050 with the screws 15U-060 and the washers 15U-070 to the flap hinge half 15U-090.

3 Attach the waste flap assembly 15U-040 with the screws 15U-140, the washers 15U-150 and the clip nuts 15U-160 to the washbasin 15U-020.

(d) Attach the washbasin assembly 15U-010 with the screws 15U-270, 15U-420 and the washers 15U-380, 15U-410 to the lavatory structure.

(e) Attach the washbasin assembly 15U-010 with the screws 15U-270, the washers 15U-380 and the nuts 15U-280 to the fittings 15U-370.

(f) Attach the washbasin assembly 15U-010 with the screws 15U-270 and the washers 15U-410 to the washbasin unit bracket 15U-190.

(g) Attach the ground cable in accordance with the Process and Material Specification PMS 01-04-58 to the washbasin assembly 15U-010.

(h) Attach the damper 15U-210 with the washers 15U-230, the bolts 15U-220 and the new cotter pins 15U-240 to waste flap assembly 15U-040 and to the waste chute 18-010.

(i) Attach the vase 15U-290 with the screws 15U-300 to the washbasin 15U-020.

(j) Attach the spacer 15U-390 and the cosmetics holder 15U-310 with the screws 15U-320 and the washers 15U-400 to the washbasin 15U-020.

(k) Attach the soap dispenser holder 15U-330 with the screws 15U-340, the washers 15U-350 and the nuts 15U-360 to the washbasin 15U-020.

TASK 25-41-51-400-812-A01

D2547160900200 D2547160900400 D2547161903000 D2549010400000 D2549010400200
D2549010400400 D2549010400600 D2549010400800 D2549010401000 D2549010401400
D2549010402000 D2549010402200 D2549010402400 D2549010402600 D2549010402800
D2549010403000 D2549010403200 D2549010403400 D2549010403600 D2549010403800
D2549010404000 D2549010404200 D2549010404400 D2549010404600 D2549010404800
D2549010405000 D2549010405400 D2549010405800 D2549010406000 D2549010406200
D2549010406400 D2549010406800 D2549010407000 D2549010500000 D2549010500400
D2549010500600 D2549010500800 D2549010501000 D2549010501200 D2549010501400
D2549010501600 D2549010501800 D2549010502000 D2549010502200 D2549010502400
D2549010502600 D2549010502800 D2549010503200 D2549010503400 D2549010503600
D2549010503800 D2549010504200 D2549010504400 D2549010504600 D2549010504800
D2549010505000 D2549010505200 D2549010505400 D2549010505600 D2549010505800
D2549010506000 D2549010506200 D2549010506400 D2549010506800 D2549010507000
D2549010507200 D2549010507400 D2549010507600 D2549010507800 D2549010508000
D2549010508200 D2549010508400 D2549010508600 D2549010508800 D2549010509000
D2549010509200 D2549010509400 D2549010509600 D2549010509800 D2549010510000
D2549010510200 D2549010510400 D2549010510600 D2549010510800 D2549010511000
D2549010511200 D2549010511400 D2549010511600 D2549010511800 D2549010512000
D2549010512200 D2549010512400 D2549010512600 D2549010513000 D2549010513200
D2549010513400 D2549010513600 D2549010513800 D2549010514200 D2549010514400
D2549010514600 D2549010514800 D2549010600000 D2549010600400 D2549010600600
D2549010600800 D2549010601000 D2549010601200 D2549010601400 D2549010601600
D2549010601800 D2549010602000 D2549010602200 D2549010602400 D2549010602800
D2549010603000 D2549010603200 D2549010603400 D2549010603600 D2549010603800
D2549010604000 D2549010604200 D2549010604400 D2549010604600 D2549010604800
D2549010605000 D2549010605200 D2549010605600 D2549010605800 D2549010606000
D2549010606200 D2549010606400 D2549010606600 D2549010606800 D2549010607000
D2549010607200 D2549010607400 D2549010607600 D2549010607800 D2549010608200
D2549010608400 D2549010608600 D2549010608800 D2549010609000 D2549010609200
D2549010609400 D2549010609600 D2549010609800 D2549010610000 D2549010610400
D2549010610600 D2549010610800 D2549010611000 D2549010611200 D2549010611600
D2549010611800 D2549010612000 D2549010612200 D2549010612400 D2549010612600
D2549010613000 D2549010613400 D2549010613600 D2549010613800 D2549010614200
D2549010614400 D2549010614600 D2549010614800 D2549020300400 D2549020300600
D2549020300800 D2549020301000 D2549020301800 D2549020302000 D2549020302800
D2549020400000 D2549020400200 D2549020400400 D2549020400600 D2549020400800
D2549020401000 D2549020401200 D2549020401400 D2549020401600 D2549020402000
D2549020402200 D2549020402400 D2549020402600 D2549020403000 D2549020403200
D2549020403400 D2549020403600 D2549020403800 D2549020404000 D2549020404200
D2549020404400 D2549020404600 D2549020404800 D2549020405000 D2549020405200
D2549020405400 D2549020405600 D2549020405800 D2549020406000 D2549020406200
D2549020406400 D2549020406600 D2549020406800 D2549020407000 D2549020407200
D2549020407400 D2549020407600 D2549020407800 D2549020408000 D2549020408200
D2549020408600 D2549020408800 D2549020409000 D2549020409200 D2549020409400
D2549020409600 D2549020409800 D2549020410200 D2549020410400 D2549020410600
D2549020410800 D2549020411000 D2549020411400 D2549020411600 D2549020412600

D2549020412800 D2549020413000 D2549020413400 D2549020414200 D2549020500000
D2549020500200 D2549020500400 D2549020500600 D2549020500800 D2549020501000
D2549020501200 D2549020501400 D2549020501600 D2549020501800 D2549020502000
D2549020502200 D2549020502400 D2549020502600 D2549020502800 D2549020503000
D2549020503200 D2549020503400 D2549020503600 D2549020503800 D2549020504000
D2549020504200 D2549020504400 D2549020504600 D2549020504800 D2549020505000
D2549020505200 D2549020505400 D2549020505600 D2549020505800 D2549020506000
D2549020506200 D2549020506400 D2549020506600 D2549020506800 D2549020507000
D2549020507200 D2549020507400 D2549020507600 D2549020508000 D2549020508200
D2549020508400 D2549020508600 D2549020508800 D2549020509200 D2549020509600
D2549020509800 D2549020510000 D2549020510400 D2549020510800 D2549020511000
D2549020511200 D2549020511600 D2549020511800 D2549020512000 D2549020512200
D2549020512600 D2549020512800 D2549020513000 D2549020513200 D2549020513400
D2549020513800 D2549020514000 D2549020514200 D2549020514400 D2549020514600
D2549020514800 D2549020600000 D2549020600200 D2549020600400 D2549020600800
D2549020601000 D2549020601200 D2549020601400 D2549020601600 D2549020601800
D2549020602000 D2549020602200 D2549020602400 D2549020602600 D2549020602800
D2549020603000 D2549020603200 D2549020603400 D2549020603800 D2549020604200
D2549020604400 D2549020604600 D2549020604800 D2549020605000 D2549020605200
D2549020605400 D2549020605600 D2549020606000 D2549020606400 D2549020606600
D2549020606800 D2549020607000 D2549020607200 D2549020607400 D2549020607600
D2549020607800 D2549020608200 D2549020608400 D2549020608600 D2549020608800
D2549020609000 D2549020609200 D2549020609400 D2549020609600 D2549020609800
D2549020610000 D2549020610200 D2549020610400 D2549020610600 D2549020610800
D2549020611000 D2549020611200 D2549020611400 D2549020611600 D2549020611800
D2549020612000 D2549020612400 D2549020612600 D2549020612800 D2549020613000
D2549020613200 D2549020613600 D2549020613800 D2549020614000 D2549020614400
D2549020614600 D2549020614800 D2549020700200 D2549020700400 D2549020700600
D2549020700800 D2549020701000 D2549020701200 D2549020701400 D2549020701600
D2549020701800 D2549020702200 D2549020702400 D2549020702800 D2549020703200
D2549020703400 D2549020703600 D2549020703800 D2549020704000 D2549020704200
D2549020704400 D2549020704600 D2549020704800 D2549020705000 D2549020705200
D2549020705400 D2549020705600 D2549020705800 D2549020706000 D2549020706200
D2549020706400 D2549020706600 D2549020706800 D2549020707000 D2549020707200
D2549020707600 D2549020707800 D2549020708200 D2549020708600 D2549020708800
D2549020709000 D2549020709200 D2549020709600 D2549020709800 D2549020710200
D2549020710400 D2549020710600 D2549020710800 D2549020711000 D2549020711200
D2549020711400 D2549020711600 D2549020712000 D2549020712200 D2549020712400
D2549020712600 D2549020712800 D2549020713200 D2549020713400 D2549020713600
D2549020713800 D2549020714000 D2549020714600 D2549020800000 D2549020800200
D2549020800400 D2549020800600 D2549020800800 D2549020801000 D2549020801200
D2549020801400 D2549020801600 D2549020801800 D2549020802000 D2549020802200
D2549020802600 D2549020802800 D2549020803000 D2549020803200 D2549020803400
D2549020803600 D2549020803800 D2549020804000 D2549020804200 D2549020804400
D2549020804800 D2549020805000 D2549020805400 D2549020805600 D2549020805800
D2549020806000 D2549020806200 D2549020806600 D2549020806800 D2549020807000
D2549020807200 D2549020807600 D2549020807800 D2549020808200 D2549020808400

D2549020808600 D2549020808800 D2549020809000 D2549020809600 D2549020809800
D2549020810000 D2549020810200 D2549020810400 D2549020810600 D2549020810800
D2549020811200 D2549020811400 D2549020811600 D2549020811800 D2549020812000
D2549020812200 D2549020812400 D2549020812600 D2549020813000 D2549020813200
D2549020813400 D2549020813600 D2549020813800 D2549020814000 D2549020814200
D2549020814400 D2549020814600 D2549020814800 D2549030400000 D2549030400200
D2549030400400 D2549030400600 D2549030401000 D2549030401200 D2549030401400
D2549030401600 D2549030401800 D2549030402000 D2549030402400 D2549030402600
D2549030402800 D2549030403000 D2549030403400 D2549030403600 D2549030403800
D2549030404000 D2549030404200 D2549030404400 D2549030404600 D2549030404800
D2549030405000 D2549030405200 D2549030405600 D2549030405800 D2549030406000
D2549030406400 D2549030406600 D2549030406800 D2549030407000 D2549030407400
D2549030407600 D2549030407800 D2549030408000 D2549030408400 D2549030409000
D2549030409200 D2549030409800 D2549030410000 D2549030410400 D2549030411200
D2549030411400 D2549030411600 D2549030411800 D2549030412000 D2549030412400
D2549030412600 D2549030412800 D2549030413200 D2549030413600 D2549030414400
D2549030414800 D2549030500200 D2549030500400 D2549030500600 D2549030500800
D2549030501000 D2549030501200 D2549030501400 D2549030501600 D2549030501800
D2549030502000 D2549030502200 D2549030502400 D2549030502600 D2549030502800
D2549030503000 D2549030503200 D2549030503400 D2549030503600 D2549030503800
D2549030504000 D2549030504200 D2549030504600 D2549030504800 D2549030505200
D2549030505400 D2549030505600 D2549030505800 D2549030506000 D2549030506200
D2549030506400 D2549030506600 D2549030506800 D2549030507000 D2549030507200
D2549030507800 D2549030508000 D2549030508200 D2549030508400 D2549030508800
D2549030509000 D2549030509200 D2549030509400 D2549030509600 D2549030509800
D2549030510000 D2549030510400 D2549030510600 D2549030510800 D2549030511000
D2549030511200 D2549030511400 D2549030511600 D2549030512000 D2549030512200
D2549030512400 D2549030512800 D2549030513000 D2549030513400 D2549030513600
D2549030513800 D2549030514000 D2549030514200 D2549030514400 D2549030514600
D2549030514800 D2549030600000 D2549030600200 D2549030600600 D2549030601000
D2549030601200 D2549030601400 D2549030601800 D2549030602000 D2549030602200
D2549030602400 D2549030602600 D2549030602800 D2549030603200 D2549030603400
D2549030603800 D2549030604400 D2549030604600 D2549030604800 D2549030605000
D2549030605200 D2549030605400 D2549030605600 D2549030605800 D2549030606000
D2549030606200 D2549030606400 D2549030606600 D2549030606800 D2549030607000
D2549030607400 D2549030607600 D2549030608000 D2549030608200 D2549030608400
D2549030608600 D2549030608800 D2549030609000 D2549030609200 D2549030609800
D2549030610000 D2549030610200 D2549030610400 D2549030610600 D2549030611000
D2549030611200 D2549030611400 D2549030611600 D2549030611800 D2549030612000
D2549030612200 D2549030612400 D2549030612800 D2549030613200 D2549030613400
D2549030613600 D2549030613800 D2549030614000 D2549030614800 D2549030700200
D2549030700400 D2549030701000 D2549030701200 D2549030702600 D2549030703400
D2549030703600 D2549030705200 R225401107-000 R225401107-002 R225401107-004
R225401115-000 R225401115-002 R225401128-000 R225401133-000 R225401134-000
R225401134-002 R225401134-004 R225401134-006 R225401134-008 R225401134-010
R225401134-012 R225401134-014 R225401134-016 R225401134-018 R225401134-020
R225401134-022 R225401134-024 R225401134-026 R225401134-028 R225401134-030

R225401134-032 R225401134-034 R225401134-036 R225401134-038 R225401136-000
R225401136-004 R225401136-006 R225401136-010 R225401136-012 R225401136-016
R225401136-018 R225401136-020 R225401136-022 R225401136-024 R225401137-000
R225401137-002 R225401137-004 R225401137-006 R225401137-008 R225401137-010
R225401137-012 R225401137-014 R225401137-016 R225401139-000 R225401142-000
R225401142-002 R225401145-000 R225401145-002 R225401145-004 R225401145-006
R225401145-008 R225401145-010 R225401145-012 R225401145-014 R225401146-000
R225401146-002 R225401152-000 R225401152-002 R225401152-004 R225401152-006
R225401152-008 R225401152-010 R225401153-000 R225401159-000 R225401160-000
R225401160-002 R225401172-000 R225401172-002 R225401172-004 R225401172-006
R225401172-008 R225401172-010 R225401172-012 R225401172-014 R225401172-016
R225401172-018 R225401175-000 R225401176-000 R225401183-000 R225401183-002
R225401183-004 R225401183-006 R225401183-008 R225401188-000 R225401188-002
R225401188-004 R225401188-006 R225401192-000 R225401192-002 R225401195-000
R225401196-000 R225401196-002 R225401196-004 R225401196-006 R225401196-008
R225401196-010 R225401196-012 R225401196-014 R225401196-016 R225401196-018
R225401196-020 R225401196-022 R225401196-024 R225401196-034 R225401196-036
R225401196-038 R225401196-040 R225401196-042 R225401196-044 R225401196-046
R225401196-048 R225401196-050 R225401196-052 R225401196-054 R225401196-056
R225401196-058 R225401196-060 R225401196-062 R225401196-064 R225401196-066
R225401196-068 R225401196-070 R225401199-000 R225401199-002 R225401199-004
R225401199-006 R225401199-008 R225401199-010 R225401199-012 R225401600-000
R225401600-002 R225401600-004 R225401602-000 R225401603-000 R225401605-000
R225401605-002 R225401609-000 R225401611-000 R225401611-006 R225401611-008
R225401611-010 R225401611-012 R225401611-014 R225401611-016 R225401611-018
R225401613-000 R225401614-000 R225401618-000 R225401618-002 R225401619-000
R225401619-002 R225401622-000 R225401622-002 R225401624-000 R225401627-000
R225401627-002 R225401627-004 R225401629-000 R225401629-002 R225401639-000
R225401639-002 R225401643-000 R225401643-002 R225401643-004 R225401643-006
R225401643-008 R225401646-000 R225401646-002 R225401647-000 R225401648-000
R225401648-002 R225401648-004 R225401648-006 R225401648-008 R225401649-000
R225401656-000 R225401656-002 R225401658-000 R225401662-000 R225401662-002
R225401676-000 R225401683-000 R225401685-000 R225401685-002 R225401688-000
R225401689-004 R225401689-006 R225401693-000 R225401811-000

102. Assembly and Installation of the Door Light

A. General

This task gives you the installation and assembly procedures of the component.

B. Job Set-up Information

(1) Not applicable

C. Procedure

WARNING: **BE CAREFUL WHEN YOU USE SOLVENTS/CLEANING AGENTS, SEALANTS AND OTHER MATERIALS. OBEY THE MATERIAL MANUFACTURER'S INSTRUCTIONS AND THE LOCAL REGULATIONS. MAKE SURE THAT THERE IS A GOOD FLOW OF AIR THROUGH THE WORK AREA. DO NOT BREATHE THE FUMES. DO NOT SMOKE. DO NOT USE THESE MATERIALS NEAR A FLAME, SPARKS OR SOURCES OF HEAT. USE PROTECTIVE CLOTHING, GOGGLES AND GLOVES. IF YOU GET ONE OF THESE MATERIALS ON YOUR SKIN OR IN YOUR EYES, FLUSH IT AWAY WITH A FLOW OF CLEAN WATER. IF YOU GET ONE OF THESE MATERIALS IN YOUR MOUTH, GET IMMEDIATE MEDICAL AID. IN GENERAL, THESE MATERIALS ARE POISONOUS, FLAMMABLE AND SKIN IRRITANTS.**

CAUTION: **DO ALL THE WORK ON A CLEAN, SOFT SURFACE TO PREVENT DAMAGE TO THE COMPONENTS.**

CAUTION: **MAKE SURE THAT ALL THE PARTS ARE CLEAN BEFORE YOU ASSEMBLE THEM.**

SUB TASK 25-41-51-440-100-A01

D2547161903000 D2549010500000 D2549010500400 D2549010500600
D2549010500800 D2549010501000 D2549010501200 D2549010501400
D2549010501600 D2549010501800 D2549010502000 D2549010502200
D2549010502400 D2549010502600 D2549010502800 D2549010503200
D2549010503400 D2549010503600 D2549010503800 D2549010504200
D2549010504400 D2549010504600 D2549010504800 D2549010505000
D2549010505200 D2549010505400 D2549010505600 D2549010505800
D2549010506000 D2549010506200 D2549010506400 D2549010506800
D2549010507000 D2549010507200 D2549010507400 D2549010507600
D2549010507800 D2549010508000 D2549010508200 D2549010508400
D2549010508600 D2549010508800 D2549010509000 D2549010509200
D2549010509400 D2549010509600 D2549010509800 D2549010510000
D2549010510200 D2549010510400 D2549010510800 D2549010511000
D2549010511200 D2549010511400 D2549010511600 D2549010511800
D2549010512000 D2549010512200 D2549010512400 D2549010513000
D2549010513200 D2549010513400 D2549010513600 D2549010513800
D2549020500000 D2549020500200 D2549020500400 D2549020500600
D2549020500800 D2549020501000 D2549020501200 D2549020501400
D2549020501600 D2549020501800 D2549020502000 D2549020502400
D2549020502600 D2549020502800 D2549020503000 D2549020503200
D2549020503400 D2549020503600 D2549020503800 D2549020504000
D2549020504200 D2549020504400 D2549020504600 D2549020504800
D2549020505000 D2549020505200 D2549020505400 D2549020505800
D2549020506000 D2549020506200 D2549020506400 D2549020600000
D2549020600200 D2549020600400 D2549020600800 D2549020601000
D2549020601200 D2549020601400 D2549020601600 D2549020601800
D2549020602000 D2549020602400 D2549020602600 D2549020602800

D2549020603000 D2549020603200 D2549020603400 D2549020603800
D2549020604200 D2549020604400 D2549020604600 D2549020604800
D2549020605000 D2549020605200 D2549020605400 D2549020605600
D2549020606000 D2549020606400 D2549020606600 D2549020606800
D2549020607000 D2549020607200 D2549020607400 D2549020607600
D2549020607800 D2549020608200 D2549020608400 D2549020608600
D2549020608800 D2549020609000 D2549020609200 D2549020609400
D2549020609600 D2549020609800 D2549020610000 D2549020610200
D2549020610400 D2549020610600 D2549020610800 D2549020611000
D2549020611200 D2549020611400 D2549020611600 D2549020611800
D2549020701200 D2549020703200 D2549020705400 D2549030500200
D2549030500400 D2549030500600 D2549030500800 D2549030501000
D2549030501200 D2549030501400 D2549030501600 D2549030501800
D2549030502000 D2549030502200 D2549030502400 D2549030502600
D2549030502800 D2549030503000 D2549030503200 D2549030503400
D2549030503600 D2549030504000 D2549030504600 D2549030504800
D2549030505200 D2549030505400 D2549030505600 D2549030505800
D2549030506000 D2549030506200 D2549030506400 D2549030506600
D2549030506800 D2549030507000 D2549030507200 R225401107-000 R225401107-002 R225401107-004 R225401115-002 R225401128-000 R225401133-000 R225401134-000 R225401134-002 R225401134-004 R225401136-016 R225401137-000 R225401137-002 R225401137-010 R225401137-012 R225401139-000 R225401145-000 R225401146-000 R225401146-002 R225401159-000 R225401160-002 R225401172-002 R225401175-000 R225401176-000 R225401188-000 R225401188-002 R225401188-004 R225401188-006

1. Assembly and Installation of the Door Light (14-1)

   (a) Attach the ballast unit 14-100 with the screws 14-070, 14-075 and the washers 14-080 to the lavatory structure.

   (b) Attach the fluorescent lamp 14-090 to the ballast unit 14-100.

   NOTE: For further instructions, see CMMV 33-24-16_D1347 (ballast unit).

   (c) Attach the part of the double-spring ball catches 14-030 with the screws 14-040 and the washers 14-050 to the lavatory structure.

   (d) Attach the lamp cover assembly 14-010 to the part of the double-spring ball catches 14-030.

SUB TASK 25-41-51-440-100-B01

D2547160900200 D2547160900400 D2549010400000 D2549010400200
D2549010400400 D2549010400600 D2549010400800 D2549010401000
D2549010401400 D2549010402000 D2549010402200 D2549010402400
D2549010402600 D2549010402800 D2549010403000 D2549010403200

D2549010403400 D2549010403600 D2549010403800 D2549010404000
D2549010404200 D2549010404400 D2549010404600 D2549010404800
D2549010405000 D2549010405400 D2549010405800 D2549010406000
D2549010406200 D2549010406400 D2549010406800 D2549010407000
D2549010510600 D2549010512600 D2549010514200 D2549010514400
D2549010514600 D2549010514800 D2549010600000 D2549010600400
D2549010600600 D2549010600800 D2549010601000 D2549010601200
D2549010601400 D2549010601600 D2549010601800 D2549010602000
D2549010602200 D2549010602400 D2549010602800 D2549010603000
D2549010603200 D2549010603400 D2549010603600 D2549010603800
D2549010604000 D2549010604200 D2549010604400 D2549010604600
D2549010604800 D2549010605000 D2549010605200 D2549010605600
D2549010605800 D2549010606000 D2549010606200 D2549010606400
D2549010606600 D2549010606800 D2549010607000 D2549010607200
D2549010607400 D2549010607600 D2549010607800 D2549010608200
D2549010608400 D2549010608600 D2549010608800 D2549010609000
D2549010609200 D2549010609400 D2549010609600 D2549010609800
D2549010610000 D2549010610400 D2549010610600 D2549010610800
D2549010611000 D2549010611200 D2549010611600 D2549010611800
D2549010612000 D2549010612200 D2549010612400 D2549010612600
D2549010613000 D2549010613400 D2549010613600 D2549010613800
D2549010614200 D2549010614400 D2549010614600 D2549010614800
D2549020300400 D2549020300600 D2549020300800 D2549020301000
D2549020301800 D2549020302000 D2549020302800 D2549020400000
D2549020400200 D2549020400400 D2549020400600 D2549020400800
D2549020401000 D2549020401200 D2549020401400 D2549020401600
D2549020402000 D2549020402200 D2549020402400 D2549020402600
D2549020403000 D2549020403200 D2549020403400 D2549020403600
D2549020403800 D2549020404000 D2549020404200 D2549020404400
D2549020404600 D2549020404800 D2549020405000 D2549020405200
D2549020405400 D2549020405600 D2549020405800 D2549020406000
D2549020406200 D2549020406400 D2549020406600 D2549020406800
D2549020407000 D2549020407200 D2549020407400 D2549020407600
D2549020407800 D2549020408000 D2549020408200 D2549020408600
D2549020408800 D2549020409000 D2549020409200 D2549020409400
D2549020409600 D2549020409800 D2549020410200 D2549020410400
D2549020410600 D2549020410800 D2549020411000 D2549020411400
D2549020411600 D2549020412600 D2549020412800 D2549020413000
D2549020413400 D2549020414200 D2549020502200 D2549020505600
D2549020506600 D2549020506800 D2549020507000 D2549020507200
D2549020507400 D2549020507600 D2549020508000 D2549020508200
D2549020508400 D2549020508600 D2549020508800 D2549020509200
D2549020509600 D2549020509800 D2549020510000 D2549020510400
D2549020510800 D2549020511000 D2549020511200 D2549020511600
D2549020511800 D2549020512000 D2549020512200 D2549020512600
D2549020512800 D2549020513000 D2549020513200 D2549020513400
D2549020513800 D2549020514000 D2549020514200 D2549020514400

D2549020514600 D2549020514800 D2549020602200 D2549020612000
D2549020612400 D2549020612600 D2549020612800 D2549020613000
D2549020613200 D2549020613600 D2549020613800 D2549020614000
D2549020614400 D2549020614600 D2549020614800 D2549020700200
D2549020700400 D2549020700600 D2549020700800 D2549020701000
D2549020701400 D2549020701600 D2549020701800 D2549020702200
D2549020702400 D2549020702800 D2549020703400 D2549020703600
D2549020703800 D2549020704000 D2549020704200 D2549020704400
D2549020704600 D2549020704800 D2549020705000 D2549020705200
D2549020705600 D2549020705800 D2549020706000 D2549020706200
D2549020706400 D2549020706600 D2549020706800 D2549020707000
D2549020707200 D2549020707600 D2549020707800 D2549020708200
D2549020708600 D2549020708800 D2549020709000 D2549020709200
D2549020709600 D2549020709800 D2549020710200 D2549020710400
D2549020710600 D2549020710800 D2549020711000 D2549020711200
D2549020711400 D2549020711600 D2549020712000 D2549020712200
D2549020712400 D2549020712600 D2549020712800 D2549020713200
D2549020713400 D2549020713600 D2549020713800 D2549020714000
D2549020714600 D2549020800000 D2549020800200 D2549020800400
D2549020800600 D2549020800800 D2549020801000 D2549020801200
D2549020801400 D2549020801600 D2549020801800 D2549020802000
D2549020802200 D2549020802600 D2549020802800 D2549020803000
D2549020803200 D2549020803400 D2549020803600 D2549020803800
D2549020804000 D2549020804200 D2549020804400 D2549020804800
D2549020805000 D2549020805400 D2549020805600 D2549020805800
D2549020806000 D2549020806200 D2549020806600 D2549020806800
D2549020807000 D2549020807200 D2549020807600 D2549020807800
D2549020808200 D2549020808400 D2549020808600 D2549020808800
D2549020809000 D2549020809600 D2549020809800 D2549020810000
D2549020810200 D2549020810400 D2549020810600 D2549020810800
D2549020811200 D2549020811400 D2549020811600 D2549020811800
D2549020812000 D2549020812200 D2549020812400 D2549020812600
D2549020813000 D2549020813200 D2549020813400 D2549020813600
D2549020813800 D2549020814000 D2549020814200 D2549020814400
D2549020814600 D2549020814800 D2549030400000 D2549030400200
D2549030400400 D2549030400600 D2549030401000 D2549030401200
D2549030401400 D2549030401600 D2549030401800 D2549030402000
D2549030402400 D2549030402600 D2549030402800 D2549030403000
D2549030403400 D2549030403600 D2549030403800 D2549030404000
D2549030404200 D2549030404400 D2549030404600 D2549030404800
D2549030405000 D2549030405200 D2549030405600 D2549030405800
D2549030406000 D2549030406400 D2549030406600 D2549030406800
D2549030407000 D2549030407400 D2549030407600 D2549030407800
D2549030408000 D2549030408400 D2549030409000 D2549030409200
D2549030409800 D2549030410000 D2549030410400 D2549030411200
D2549030411400 D2549030411600 D2549030411800 D2549030412000
D2549030412400 D2549030412600 D2549030412800 D2549030413200

D2549030413600 D2549030414400 D2549030414800 D2549030503800
D2549030504200 D2549030507800 D2549030508000 D2549030508200
D2549030508400 D2549030508800 D2549030509000 D2549030509200
D2549030509400 D2549030509600 D2549030509800 D2549030510000
D2549030510400 D2549030510600 D2549030510800 D2549030511000
D2549030511200 D2549030511400 D2549030511600 D2549030512000
D2549030512200 D2549030512400 D2549030512800 D2549030513000
D2549030513400 D2549030513600 D2549030513800 D2549030514000
D2549030514200 D2549030514400 D2549030514600 D2549030514800
D2549030600000 D2549030600200 D2549030600600 D2549030601000
D2549030601200 D2549030601400 D2549030601800 D2549030602000
D2549030602200 D2549030602400 D2549030602600 D2549030602800
D2549030603200 D2549030603400 D2549030603800 D2549030604400
D2549030604600 D2549030604800 D2549030605000 D2549030605200
D2549030605400 D2549030605600 D2549030605800 D2549030606000
D2549030606200 D2549030606400 D2549030606600 D2549030606800
D2549030607000 D2549030607400 D2549030607600 D2549030608000
D2549030608200 D2549030608400 D2549030608600 D2549030608800
D2549030609000 D2549030609200 D2549030609800 D2549030610000
D2549030610200 D2549030610400 D2549030610600 D2549030611000
D2549030611200 D2549030611400 D2549030611600 D2549030611800
D2549030612000 D2549030612200 D2549030612400 D2549030612800
D2549030613200 D2549030613400 D2549030613600 D2549030613800
D2549030614000 D2549030614800 D2549030700200 D2549030700400
D2549030701000 D2549030701200 D2549030702600 D2549030703400
D2549030703600 D2549030705200 R225401115-000 R225401134-006 R225401134-
008 R225401134-010 R225401134-012 R225401134-014 R225401134-016 R225401134-
018 R225401134-020 R225401134-022 R225401134-024 R225401134-026 R225401134-
028 R225401134-030 R225401134-032 R225401134-034 R225401134-036 R225401134-
038 R225401136-000 R225401136-004 R225401136-006 R225401136-010 R225401136-
012 R225401136-018 R225401136-020 R225401136-022 R225401136-024 R225401137-
004 R225401137-006 R225401137-008 R225401137-014 R225401137-016 R225401142-
000 R225401142-002 R225401145-002 R225401145-004 R225401145-006 R225401145-
008 R225401145-010 R225401145-012 R225401145-014 R225401152-000 R225401152-
002 R225401152-004 R225401152-006 R225401152-008 R225401152-010 R225401153-
000 R225401160-000 R225401172-000 R225401172-004 R225401172-006 R225401172-
008 R225401172-010 R225401172-012 R225401172-014 R225401172-016 R225401172-
018 R225401183-000 R225401183-002 R225401183-004 R225401183-006 R225401183-
008 R225401192-000 R225401192-002 R225401195-000 R225401196-000 R225401196-
002 R225401196-004 R225401196-006 R225401196-008 R225401196-010 R225401196-
012 R225401196-014 R225401196-016 R225401196-018 R225401196-020 R225401196-
022 R225401196-024 R225401196-034 R225401196-036 R225401196-038 R225401196-
040 R225401196-042 R225401196-044 R225401199-000 R225401199-002 R225401199-
004 R225401199-006 R225401199-008 R225401199-010 R225401199-012
R225401600-000 R225401600-002 R225401600-004 R225401602-000 R225401603-
000 R225401605-000 R225401605-002 R225401609-000 R225401611-000
R225401611-006 R225401611-008 R225401611-010 R225401611-012 R225401611-014

R225401611-016 R225401611-018 R225401613-000 R225401614-000 R225401618-000 R225401618-002 R225401619-000 R225401619-002 R225401622-000 R225401622-002 R225401624-000 R225401627-000 R225401627-002 R225401627-004 R225401629-000 R225401629-002 R225401639-000 R225401639-002 R225401643-000 R225401643-002 R225401643-004 R225401643-006 R225401643-008 R225401646-000 R225401646-002 R225401647-000 R225401648-000 R225401648-002 R225401648-004 R225401648-006 R225401648-008 R225401649-000 R225401656-000 R225401656-002 R225401658-000 R225401662-000 R225401662-002 R225401676-000 R225401683-000 R225401685-000 R225401685-002 R225401688-000 R225401689-004 R225401689-006 R225401693-000 R225401811-000

2. Assembly and Installation of the Door Light (14-1)

   (a) Attach the ballast unit 14-100 and the reflector 14-060 with the screws 14-070, 14-075 and the washers 14-080 to the lavatory structure.

   (b) Attach the fluorescent lamp 14-090 to the ballast unit 14-100.

   NOTE: For further instructions, see CMMV 33-24-16_D1347 (ballast unit).

   (c) Attach the part of the double-spring ball catches 14-030 with the screws 14-040 and the washers 14-050 to the lavatory structure.

   (d) Attach the lamp cover assembly 14-010 to the part of the double-spring ball catches 14-030.

TASK 25-41-51-400-812-B01

D2549010401600 D2549010401800 D2549010405200 D2549010405600 D2549010514000
D2549010600200 D2549010602600 D2549010610200 D2549010611400 D2549010613200
D2549020300000 D2549020301600 D2549020411200 D2549020411800 D2549020412000
D2549020412200 D2549020412400 D2549020413200 D2549020413600 D2549020413800
D2549020414000 D2549020414600 D2549020414800 D2549020507800 D2549020509000
D2549020510600 D2549020512400 D2549020513600 D2549020603600 D2549020604000
D2549020605800 D2549020612200 D2549020700000 D2549020702000 D2549020702600
D2549020707400 D2549020708000 D2549020708400 D2549020709400 D2549020710000
D2549020713000 D2549020714400 D2549020802400 D2549020805200 D2549020806400
D2549020807400 D2549020809400 D2549020812800 D2549030402200 D2549030405400
D2549030407200 D2549030408200 D2549030408600 D2549030409400 D2549030410200
D2549030410600 D2549030412200 D2549030413000 D2549030413400 D2549030414000
D2549030414200 D2549030414600 D2549030507400 D2549030507600 D2549030508600
D2549030510200 D2549030511800 D2549030513200 D2549030600400 D2549030600800
D2549030601600 D2549030603000 D2549030603600 D2549030604200 D2549030607200
D2549030607800 D2549030612600 D2549030614200 D2549030614400 D2549030614600
D2549030700000 D2549030700600 D2549030700800 D2549030701400 D2549030701600
D2549030701800 D2549030702000 D2549030702200 D2549030702400 D2549030702800
D2549030703000 D2549030703200 D2549030703800 D2549030704000 D2549030704200
D2549030704400 D2549030704600 D2549030704800 D2549030705600 D2549040500200
D2549040500400 D2549040500600 D2549040500800 D2549040501000 D2549040501200
D2549040501400 D2549040501600 D2549040501800 D2549040502000 R225401136-008
R225401136-014 R225401168-000 R225401168-002 R225401168-004 R225401168-006
R225401168-008 R225401168-010 R225401168-012 R225401168-014 R225401168-016
R225401168-018 R225401168-020 R225401168-022 R225401168-024 R225401168-026
R225401168-028 R225401175-002 R225401611-020 R225401625-000 R225401671-000
R225401671-002 R225401673-000 R225401673-002 R225401673-004 R225401673-006
R225401675-000 R225401691-000 R225401691-002 R225401697-000 R225401697-002
R225401803-000 R225401803-002 R225401808-000 R225401814-000

103. Assembly and Installation of the Door Light

A. General

This task gives you the installation and assembly procedures of the component.

B. Job Set-up Information

(1) Not applicable

C. Procedure

WARNING: **BE CAREFUL WHEN YOU USE SOLVENTS/CLEANING AGENTS, SEALANTS AND OTHER MATERIALS. OBEY THE MATERIAL MANUFACTURER'S INSTRUCTIONS AND THE LOCAL REGULATIONS. MAKE SURE THAT THERE IS A GOOD FLOW OF AIR THROUGH THE WORK AREA. DO NOT BREATHE THE FUMES. DO NOT SMOKE. DO NOT USE THESE MATERIALS NEAR A FLAME, SPARKS OR SOURCES OF HEAT. USE PROTECTIVE CLOTHING, GOGGLES AND GLOVES. IF YOU GET ONE OF THESE MATERIALS ON YOUR SKIN OR IN YOUR EYES, FLUSH IT AWAY WITH A FLOW OF CLEAN WATER. IF YOU GET ONE OF THESE MATERIALS IN YOUR MOUTH, GET IMMEDIATE MEDICAL AID. IN GENERAL, THESE MATERIALS ARE POISONOUS, FLAMMABLE AND SKIN IRRITANTS.**

CAUTION: **DO ALL THE WORK ON A CLEAN, SOFT SURFACE TO PREVENT DAMAGE TO THE COMPONENTS.**

CAUTION: **MAKE SURE THAT ALL THE PARTS ARE CLEAN BEFORE YOU ASSEMBLE THEM.**

SUB TASK 25-41-51-440-101-A01

D2549010401600 D2549010401800 D2549010514000 D2549010600200 D2549010602600 D2549010610200 D2549010611400 D2549010613200 D2549020300000 D2549020411800 D2549020509000 D2549020510600 D2549020512400 D2549020513600 D2549020612200 D2549020700000 D2549020702000 D2549020702600 D2549020707400 D2549020708000 D2549020709400 D2549020710000 D2549020713000 D2549020714400 D2549020802400 D2549020805200 D2549020806400 D2549020807400 D2549020809400 D2549030402200 D2549030405400 D2549030407200 D2549030408200 D2549030408600 D2549030409400 D2549030410200 D2549030410600 D2549030412200 D2549030413400 D2549030507400 D2549030507600 D2549030508600 D2549030510200 D2549030511800 D2549030513200 D2549030600400 D2549030600800 D2549030601600 D2549030603000 D2549030603600 D2549030604200 D2549030607200 D2549030607800 D2549030612600 D2549030614200 D2549030614400 D2549030614600 D2549030704200 D2549030704400 R225401168-000 R225401168-002 R225401168-004 R225401168-006 R225401168-008 R225401168-010 R225401168-012 R225401168-014 R225401168-016 R225401168-018 R225401168-020 R225401168-022 R225401168-024 R225401168-026 R225401168-028 R225401175-002 R225401625-000 R225401675-000

1. Assembly and Installation of the Door Light (14A-1)

   (a) Attach the ballast unit 14A-100 and the reflector 14A-060 with the screws 14A-070, 14A-075 and the washers 14A-080 to the lavatory structure.

(b) Attach the fluorescent lamp 14A-090 to the ballast unit 14A-100.

NOTE: For further instructions, see CMMV 33-24-16_D1347 (ballast unit).

(c) Attach the part of the double-spring ball catches 14A-030 with the screws 14A-040 and the washers 14A-050 to the lavatory structure.

(d) Attach the lamp cover assembly 14A-010 to the part of the double-spring ball catches 14A-030.

SUB TASK 25-41-51-440-101-B01
D2549010405200 D2549010405600 D2549020301600 D2549020411200 D2549020412000 D2549020412200 D2549020412400 D2549020413200 D2549020413600 D2549020413800 D2549020414000 D2549020414600 D2549020414800 D2549020507800 D2549020603600 D2549020604000 D2549020605800 D2549020708400 D2549020812800 D2549030413000 D2549030414000 D2549030414200 D2549030414600 D2549030700000 D2549030700600 D2549030700800 D2549030701400 D2549030701600 D2549030701800 D2549030702000 D2549030702200 D2549030702400 D2549030702800 D2549030703000 D2549030703200 D2549030703800 D2549030704000 D2549030704600 D2549030704800 D2549030705600 D2549040500200 D2549040500400 D2549040500600 D2549040500800 D2549040501000 D2549040501200 D2549040501400 D2549040501600 D2549040501800 D2549040502000 R225401136-008 R225401136-014 R225401611-020 R225401671-000 R225401671-002 R225401673-000 R225401673-002 R225401673-004 R225401673-006 R225401691-000 R225401691-002 R225401697-000 R225401697-002 R225401803-000 R225401803-002 R225401808-000 R225401814-000

2. Assembly and Installation of the Door Light (14A-1)

(a) Attach the advanced integrated ballast unit 14A-100, the spacers 14A-110, 14A-120 and the reflector 14A-060 with the screws 14A-070, 14A-075 and the washers 14A-080 to the lavatory structure.

(b) Attach the fluorescent lamp 14A-090 to the advanced integrated ballast unit 14A-100.

NOTE: For further instructions, see CMMV 33-24-18_D1347 (advanced integrated ballast unit).

(c) Attach the part of the double-spring ball catches 14A-030 with the screws 14A-040 and the washers 14A-050 to the lavatory structure.

(d) Attach the lamp cover assembly 14A-010 to the part of the double-spring ball catches 14A-030.

TASK 25-41-51-400-812-C01
D2549030409600 D2549030410800

104. Assembly and Installation of the Door Light

A. General

This task gives you the installation and assembly procedures of the component.

B. Job Set-up Information

(1) Not applicable

C. Procedure

WARNING: BE CAREFUL WHEN YOU USE SOLVENTS/CLEANING AGENTS, SEALANTS AND OTHER MATERIALS. OBEY THE MATERIAL MANUFACTURER'S INSTRUCTIONS AND THE LOCAL REGULATIONS. MAKE SURE THAT THERE IS A GOOD FLOW OF AIR THROUGH THE WORK AREA. DO NOT BREATHE THE FUMES. DO NOT SMOKE. DO NOT USE THESE MATERIALS NEAR A FLAME, SPARKS OR SOURCES OF HEAT. USE PROTECTIVE CLOTHING, GOGGLES AND GLOVES. IF YOU GET ONE OF THESE MATERIALS ON YOUR SKIN OR IN YOUR EYES, FLUSH IT AWAY WITH A FLOW OF CLEAN WATER. IF YOU GET ONE OF THESE MATERIALS IN YOUR MOUTH, GET IMMEDIATE MEDICAL AID. IN GENERAL, THESE MATERIALS ARE POISONOUS, FLAMMABLE AND SKIN IRRITANTS.

CAUTION: DO ALL THE WORK ON A CLEAN, SOFT SURFACE TO PREVENT DAMAGE TO THE COMPONENTS.

CAUTION: MAKE SURE THAT ALL THE PARTS ARE CLEAN BEFORE YOU ASSEMBLE THEM.

SUB TASK 25-41-51-440-102-A01

1. Assembly and Installation of the Door Light (14B-1)

(a) Attach the advanced integrated ballast unit 14B-100, the spacers 14B-110, 14B-120 and the reflector 14B-060 with the screws 14B-070 and the washers 14B-080 to the lavatory structure.

(b) Attach the fluorescent lamp 14B-090 to the advanced integrated ballast unit 14B-100.

NOTE: For further instructions, see CMMV 33-24-18_D1347 (advanced integrated ballast unit).

(c) Attach the part of the double-spring ball catches 14B-030 with the screws 14B-040 and the washers 14B-050 to the lavatory structure.

(d) Attach the lamp cover assembly 14B-010 to the part of the double-spring ball catches 14B-030.

TASK 25-41-51-400-812-D01
R225401196-046 R225401196-048 R225401196-050 R225401196-052 R225401196-054 R225401196-056 R225401196-058 R225401196-060 R225401196-062 R225401196-064 R225401196-066 R225401196-068 R225401196-070

105. Assembly and Installation of the Door Light

A. General

This task gives you the installation and assembly procedures of the component.

B. Job Set-up Information

(1) Not applicable

C. Procedure

WARNING: BE CAREFUL WHEN YOU USE SOLVENTS/CLEANING AGENTS, SEALANTS AND OTHER MATERIALS. OBEY THE MATERIAL MANUFACTURER'S INSTRUCTIONS AND THE LOCAL REGULATIONS. MAKE SURE THAT THERE IS A GOOD FLOW OF AIR THROUGH THE WORK AREA. DO NOT BREATHE THE FUMES. DO NOT SMOKE. DO NOT USE THESE MATERIALS NEAR A FLAME, SPARKS OR SOURCES OF HEAT. USE PROTECTIVE CLOTHING, GOGGLES AND GLOVES. IF YOU GET ONE OF THESE MATERIALS ON YOUR SKIN OR IN YOUR EYES, FLUSH IT AWAY WITH A FLOW OF CLEAN WATER. IF YOU GET ONE OF THESE MATERIALS IN YOUR MOUTH, GET IMMEDIATE MEDICAL AID. IN GENERAL, THESE MATERIALS ARE POISONOUS, FLAMMABLE AND SKIN IRRITANTS.

CAUTION: DO ALL THE WORK ON A CLEAN, SOFT SURFACE TO PREVENT DAMAGE TO THE COMPONENTS.

CAUTION: MAKE SURE THAT ALL THE PARTS ARE CLEAN BEFORE YOU ASSEMBLE THEM.

SUB TASK 25-41-51-440-105-A01
R225401196-046 R225401196-048 R225401196-050 R225401196-052 R225401196-054 R225401196-056 R225401196-058 R225401196-060 R225401196-062 R225401196-064 R225401196-066 R225401196-068 R225401196-070

1. Assembly and Installation of the Door Light (14C-1)

(a) Attach the cledu 14C-060 and the tie cable 14C-50.

(b) Attach the cledu cable 14C-040.

(c) Attach the brackets 14C-070 with the screws 14C-100 and the washers 14C-110 to the lavatory structure.

(d) Attach the part of the double-spring ball catches 14C-030 with the screws 14C-080 and the washers 14C-090 to the lavatory structure.

(e) Attach the lamp cover assembly 14C-010 to the part of the double-spring ball catches 14C-030.

TASK 25-41-51-400-813-A01

D2547161903000 D2549010500000 D2549010500400 D2549010500600 D2549010500800 D2549010501200 D2549010501400 D2549010501600 D2549010501800 D2549010502200 D2549010502600 D2549010502800 D2549010503200 D2549010503400 D2549010503600 D2549010503800 D2549010504600 D2549010505000 D2549010505200 D2549010505400 D2549010505600 D2549010505800 D2549010506000 D2549010506200 D2549010506400 D2549010506800 D2549010507000 D2549010507200 D2549010507600 D2549010507800 D2549010508200 D2549010508600 D2549010508800 D2549010509200 D2549010512600 D2549010601800 D2549020500000 D2549020500400 D2549020500600 D2549020500800 D2549020501200 D2549020501400 D2549020501600 D2549020501800 D2549020502000 D2549020502400 D2549020502600 D2549020502800 D2549020503200 D2549020503400 D2549020503600 D2549020503800 D2549020504200 D2549020504400 D2549020504600 D2549020504800 D2549020505000 D2549020505200 D2549020505400 D2549020505800 D2549020506000 D2549020600200 D2549020600400 D2549020600800 D2549020601000 D2549020601400 D2549020601800 D2549020602000 D2549020602600 D2549020603000 D2549020603400 D2549020603600 D2549020603800 D2549020604000 D2549020606400 D2549020606600 D2549020607200 D2549030500200 D2549030500600 D2549030501000 D2549030501400 D2549030501600 D2549030501800 D2549030502200 D2549030502400 D2549030502600 D2549030503000 D2549030503200 D2549030503400 D2549030503600 D2549030509000 R225401115-002 R225401128-000 R225401145-000 R225401146-000 R225401146-002 R225401188-006

106. Installation of the Floor Pan

A. General

This task gives you the installation and assembly procedures of the component.

B. Procedure

WARNING: **BE CAREFUL WHEN YOU USE SOLVENTS/CLEANING AGENTS, SEALANTS AND OTHER MATERIALS. OBEY THE MATERIAL MANUFACTURER'S INSTRUCTIONS AND THE LOCAL REGULATIONS. MAKE SURE THAT THERE IS A GOOD FLOW OF AIR THROUGH THE WORK AREA. DO NOT BREATHE THE FUMES. DO NOT SMOKE. DO NOT USE THESE MATERIALS NEAR A FLAME, SPARKS OR SOURCES OF HEAT. USE PROTECTIVE CLOTHING, GOGGLES AND GLOVES. IF YOU GET ONE OF THESE MATERIALS ON YOUR SKIN OR IN YOUR EYES, FLUSH IT AWAY WITH A FLOW OF CLEAN WATER. IF YOU GET ONE OF THESE MATERIALS IN YOUR MOUTH, GET IMMEDIATE MEDICAL AID. IN GENERAL, THESE MATERIALS ARE POISONOUS, FLAMMABLE AND SKIN IRRITANTS.**

CAUTION: **DO ALL THE WORK ON A CLEAN, SOFT SURFACE TO PREVENT DAMAGE TO THE COMPONENTS.**

CAUTION: **MAKE SURE THAT ALL THE PARTS ARE CLEAN BEFORE YOU ASSEMBLE THEM.**

SUB TASK 25-41-51-400-141-A01

D2549010500000 D2549010500800 D2549010501200 D2549010502600 D2549010503800 D2549010506000 D2549010507600 D2549020603600 D2549020604000 D2549030500600 D2549030501400 D2549030503000

1. Installation of the Floor Pan (13-1)

   (a) Assemble the floor pan assembly 13-010 as follows:

      1 Attach the flap assemblies 13-020 with the screws 13-030, 13-105, the washers 13-040 and the nuts 13-050 to the floor pan assembly 13-010.

   (b) Attach the floor pan assembly 13-010 with the screws 13-090, 13-100 and the washers 13-110, 13-120 to the lavatory structure.

SUB TASK 25-41-51-400-141-B01

D2547161903000 D2549010500400 D2549010500600 D2549010501400 D2549010501600 D2549010501800 D2549010502200 D2549010502800 D2549010503200 D2549010503400 D2549010503600 D2549010504600 D2549010505000 D2549010505200 D2549010505400 D2549010505600 D2549010505800 D2549010506200 D2549010506400 D2549010506800 D2549010507000 D2549010507200 D2549010507800 D2549010508200 D2549010508600 D2549010508800 D2549010509200 D2549010512600 D2549010601800 D2549020500000 D2549020500400 D2549020500600 D2549020500800 D2549020501200 D2549020501400 D2549020501600 D2549020501800 D2549020502000 D2549020502400 D2549020502600 D2549020502800 D2549020503200 D2549020503400 D2549020503600 D2549020503800 D2549020504200 D2549020504400 D2549020504600 D2549020504800 D2549020505000 D2549020505200 D2549020505400 D2549020505800 D2549020506000 D2549020600200 D2549020600400 D2549020600800 D2549020601000 D2549020601400 D2549020601800 D2549020602000 D2549020602600 D2549020603000 D2549020603400 D2549020603800 D2549020606400 D2549020606600 D2549020607200 D2549030500200 D2549030501000 D2549030501600 D2549030501800 D2549030502200 D2549030502400 D2549030502600 D2549030503200 D2549030503400 D2549030503600 D2549030509000 R225401115-002 R225401128-000 R225401145-000 R225401146-000 R225401146-002 R225401188-006

2. Installation of the Floor Pan (13-1)

   (a) Assemble the floor pan assembly 13-010 as follows:

1 If removed, attach the non-textile floor covering 13-060 with the adhesive tape 13-063 to the floor pan assembly 13-010.

2 Apply the sealant 13-066 around the edges of the non-textile floor covering 13-060 with the seal gun.

3 Attach the flap assemblies 13-020 with the screws 13-030, 13-105, the washers 13-040 and the nuts 13-050 to the floor pan assembly 13-010.

(b) Attach the floor pan assembly 13-010 with the screws 13-090, 13-100 and the washers 13-110 to the lavatory structure.

TASK 25-41-51-400-813-B01
D2549010508000 D2549010514400 D2549020602400 D2549020602800 D2549020604600 D2549020703200 D2549030500400 D2549030501200 D2549030514200 D2549030600600 D2549030605800 R225401134-000 R225401137-012 R225401139-000 R225401188-000 R225401188-002

107. Installation of the Floor Pan

A. General

This task gives you the installation and assembly procedures of the component.

B. Procedure

WARNING: BE CAREFUL WHEN YOU USE SOLVENTS/CLEANING AGENTS, SEALANTS AND OTHER MATERIALS. OBEY THE MATERIAL MANUFACTURER'S INSTRUCTIONS AND THE LOCAL REGULATIONS. MAKE SURE THAT THERE IS A GOOD FLOW OF AIR THROUGH THE WORK AREA. DO NOT BREATHE THE FUMES. DO NOT SMOKE. DO NOT USE THESE MATERIALS NEAR A FLAME, SPARKS OR SOURCES OF HEAT. USE PROTECTIVE CLOTHING, GOGGLES AND GLOVES. IF YOU GET ONE OF THESE MATERIALS ON YOUR SKIN OR IN YOUR EYES, FLUSH IT AWAY WITH A FLOW OF CLEAN WATER. IF YOU GET ONE OF THESE MATERIALS IN YOUR MOUTH, GET IMMEDIATE MEDICAL AID. IN GENERAL, THESE MATERIALS ARE POISONOUS, FLAMMABLE AND SKIN IRRITANTS.

CAUTION: DO ALL THE WORK ON A CLEAN, SOFT SURFACE TO PREVENT DAMAGE TO THE COMPONENTS.

CAUTION: MAKE SURE THAT ALL THE PARTS ARE CLEAN BEFORE YOU ASSEMBLE THEM.

SUB TASK 25-41-51-400-142-A01
1. Installation of the Floor Pan (13A-1)

(a) Assemble the floor pan assembly 13A-010 as follows:

1 If removed, attach the non-textile floor covering 13A-060 with the adhesive tape 13A-063 to the floor pan assembly 13A-010.

2 Apply the sealant 13A-066 around the edges of the non-textile floor covering 13A-060 with the seal gun.

3 Attach the flap assemblies 13A-020 with the screws 13A-030, the washers 13A-040 and the nuts 13A-050 to the floor pan assembly 13A-010.

(b) Attach the floor pan assembly 13A-010 with the screws 13A-090, 13A-100 and the washers 13A-110 to the lavatory structure.

TASK 25-41-51-400-813-C01

D2549010504400 D2549010507400 D2549010509400 D2549010509600 D2549010509800 D2549010510000 D2549010510400 D2549010511400 D2549010511600 D2549010512000 D2549010512200 D2549010513400 D2549010600000 D2549010600400 D2549010602000 D2549010602200 D2549010602400 D2549010604000 D2549010604600 D2549010604800 D2549010606400 D2549020506400 D2549020506600 D2549020506800 D2549020507000 D2549020507200 D2549020507400 D2549020507600 D2549020507800 D2549020508200 D2549020508400 D2549020511200 D2549020512800 D2549020513600 D2549020604200 D2549020604400 D2549020605000 D2549020605200 D2549020605400 D2549020605600 D2549020605800 D2549020607800 D2549020608200 D2549020608400 D2549020608600 D2549020609400 D2549020610000 D2549020611200 D2549020611400 D2549020611800 D2549020612600 D2549020612800 D2549020613600 D2549020614000 D2549020614600 D2549020701000 D2549020701800 D2549020702600 D2549020704800 D2549020707000 D2549020707200 D2549020708400 D2549020708600 D2549030504600 D2549030504800 D2549030505400 D2549030505600 D2549030505800 D2549030506200 D2549030506600 D2549030506800 D2549030507800 D2549030508000 D2549030508800 D2549030509400 D2549030510400 D2549030510600 D2549030511400 D2549030513000 D2549030513800 D2549030514600 D2549030601800 D2549030602800 D2549030603800 D2549030604800 D2549030605600 D2549030607000 D2549030607400 R225401115-000 R225401134-002 R225401134-004 R225401134-006 R225401134-008 R225401134-010 R225401134-016 R225401134-018 R225401134-020 R225401134-022 R225401134-024 R225401136-016 R225401183-008 R225401603-000

108. Installation of the Floor Pan

A. General

This task gives you the installation and assembly procedures of the component.

B. Procedure

WARNING: **BE CAREFUL WHEN YOU USE SOLVENTS/CLEANING AGENTS, SEALANTS AND OTHER MATERIALS. OBEY THE MATERIAL MANUFACTURER'S INSTRUCTIONS AND THE LOCAL REGULATIONS. MAKE SURE THAT THERE IS A GOOD FLOW OF AIR THROUGH THE WORK AREA. DO NOT BREATHE THE FUMES. DO NOT SMOKE. DO NOT USE THESE MATERIALS NEAR A FLAME, SPARKS OR SOURCES OF HEAT. USE PROTECTIVE CLOTHING, GOGGLES AND GLOVES. IF YOU GET ONE OF THESE MATERIALS ON YOUR SKIN OR IN YOUR EYES, FLUSH IT AWAY WITH A FLOW OF CLEAN WATER. IF YOU GET ONE OF THESE MATERIALS IN YOUR MOUTH, GET IMMEDIATE MEDICAL AID. IN GENERAL, THESE MATERIALS ARE POISONOUS, FLAMMABLE AND SKIN IRRITANTS.**

CAUTION: **DO ALL THE WORK ON A CLEAN, SOFT SURFACE TO PREVENT DAMAGE TO THE COMPONENTS.**

CAUTION: **MAKE SURE THAT ALL THE PARTS ARE CLEAN BEFORE YOU ASSEMBLE THEM.**

SUB TASK 25-41-51-400-143-A01

D2549010504400 D2549010507400 D2549010510000 D2549010602000 D2549010602200 D2549010604000 D2549010604600 D2549020507800 D2549020605800 D2549020708400 D2549030504600

1. Installation of the Floor Pan (13B-1)

   (a) Assemble the floor pan assembly 13B-010 as follows:

      1 Attach the flap assemblies or the flaps 13B-020 with the screws 13B-030, the washers 13B-040 and the nuts 13B-050 to the floor pan assembly 13B-010.

   (b) Attach the floor pan assembly 13B-010 with the screws 13B-100, 13B-110 and the washers 13B-120, 13B-130 to the lavatory structure.

SUB TASK 25-41-51-400-143-B01

D2549010509400 D2549010509600 D2549010509800 D2549010510400 D2549010511400 D2549010511600 D2549010512000 D2549010512200 D2549010513400 D2549010600000 D2549010600400 D2549010602400 D2549010604800 D2549010606400 D2549020506400 D2549020506600 D2549020506800 D2549020507000 D2549020507200 D2549020507400 D2549020507600 D2549020508200 D2549020508400 D2549020511200 D2549020512800 D2549020513600 D2549020604200 D2549020604400 D2549020605000 D2549020605200 D2549020605400 D2549020605600 D2549020607800 D2549020608200 D2549020608400 D2549020608600 D2549020609400 D2549020610000 D2549020611200 D2549020611400 D2549020611800 D2549020612600 D2549020612800 D2549020613600 D2549020614000 D2549020614600 D2549020701000 D2549020701800 D2549020702600 D2549020704800 D2549020707000 D2549020707200 D2549020708600 D2549030504800 D2549030505400 D2549030505600 D2549030505800 D2549030506200 D2549030506600 D2549030506800 D2549030507800 D2549030508000 D2549030508800 D2549030509400 D2549030510400 D2549030510600 D2549030511400 D2549030513000 D2549030513800 D2549030514600 D2549030601800 D2549030602800 D2549030603800 D2549030604800 D2549030605600 D2549030607000 D2549030607400 R225401115-000 R225401134-002 R225401134-004 R225401134-006 R225401134-008 R225401134-010 R225401134-016 R225401134-018 R225401134-020 R225401134-022 R225401134-024 R225401136-016 R225401183-008 R225401603-000

2. Installation of the Floor Pan (13B-1)

   (a) Assemble the floor pan assembly 13B-010 as follows:

1 Attach the flaps 13B-020 with the screws 13B-030, the washers 13B-040 and the nuts 13B-050 to the floor pan assembly 13B-010.

(b) Attach the floor pan assembly 13B-010 with the screws 13B-100, 13B-110 and the washers 13B-120 to the lavatory structure.

TASK 25-41-51-400-813-D01

D2549010510600 D2549010510800 D2549010511000 D2549010511800 D2549010512400
D2549010513000 D2549010513800 D2549010514000 D2549010514600 D2549010514800
D2549010600200 D2549010600600 D2549010601400 D2549010602600 D2549010602800
D2549010603000 D2549010603600 D2549010603800 D2549010604200 D2549010604400
D2549010605000 D2549010605800 D2549010608800 D2549010609600 D2549020508000
D2549020509200 D2549020510400 D2549020514200 D2549020514400 D2549020602200
D2549020604800 D2549020607400 D2549020607600 D2549020609000 D2549020609600
D2549020609800 D2549020610200 D2549020610400 D2549020610600 D2549020611000
D2549020611600 D2549020612200 D2549020612400 D2549020613200 D2549020613800
D2549020614400 D2549020700200 D2549020701200 D2549020701400 D2549020702000
D2549020702400 D2549020703600 D2549020703800 D2549020706200 D2549020706600
D2549020706800 D2549020708200 D2549020709000 D2549020711200 D2549020712200
D2549020712400 D2549020712800 D2549020713800 D2549020803800 D2549030403800
D2549030504200 D2549030505200 D2549030506400 D2549030507000 D2549030507600
D2549030508200 D2549030509200 D2549030509600 D2549030509800 D2549030511000
D2549030511800 D2549030512000 D2549030513200 D2549030513600 D2549030514800
D2549030600400 D2549030601000 D2549030602000 D2549030602600 D2549030605000
D2549030605200 D2549030606200 D2549030606600 D2549030609200 D2549030613600
R225401137-000 R225401137-002 R225401137-004 R225401137-006 R225401137-008
R225401137-010 R225401137-014 R225401145-002 R225401145-004 R225401145-008
R225401145-012 R225401145-014 R225401153-000 R225401172-000 R225401172-002
R225401172-004 R225401172-006 R225401172-008 R225401172-010 R225401172-012
R225401172-014 R225401175-000 R225401175-002 R225401176-000 R225401600-000
R225401600-002 R225401600-004 R225401619-000

109. Installation of the Floor Pan

A. General

This task gives you the installation and assembly procedures of the component.

B. Procedure

WARNING: **BE CAREFUL WHEN YOU USE SOLVENTS/CLEANING AGENTS, SEALANTS AND OTHER MATERIALS. OBEY THE MATERIAL MANUFACTURER'S INSTRUCTIONS AND THE LOCAL REGULATIONS. MAKE SURE THAT THERE IS A GOOD FLOW OF AIR THROUGH THE WORK AREA. DO NOT BREATHE THE FUMES. DO NOT SMOKE. DO NOT USE THESE MATERIALS NEAR A FLAME, SPARKS OR SOURCES OF HEAT. USE PROTECTIVE CLOTHING, GOGGLES AND GLOVES. IF YOU GET ONE OF THESE MATERIALS ON YOUR SKIN OR IN YOUR EYES, FLUSH IT AWAY WITH A FLOW OF CLEAN WATER. IF YOU GET ONE OF THESE MATERIALS IN YOUR MOUTH, GET IMMEDIATE MEDICAL AID. IN GENERAL, THESE MATERIALS ARE POISONOUS, FLAMMABLE AND SKIN IRRITANTS.**

CAUTION: **DO ALL THE WORK ON A CLEAN, SOFT SURFACE TO PREVENT DAMAGE TO THE COMPONENTS.**

CAUTION: **MAKE SURE THAT ALL THE PARTS ARE CLEAN BEFORE YOU ASSEMBLE THEM.**

SUB TASK 25-41-51-400-144-A01

1. Installation of the Floor Pan (13C-1)

   (a) Assemble the floor pan assembly 13C-010 as follows:

      1 If removed, attach the non-textile floor covering 13C-060 with the adhesive tape 13C-063 to the floor pan assembly 13C-010.

      2 Apply the sealant 13C-066 around the edges of the non-textile floor covering 13C-060 with the seal gun.

      3 Attach the flaps 13C-020 with the screws 13C-030, the washers 13C-040 and the nuts 13C-050 to the floor pan assembly 13C-010.

   (b) Attach the floor pan assembly 13C-010 with the screws 13C-100, 13C-110 and the washers 13C-120 to the lavatory structure.

TASK 25-41-51-400-813-E01

D2549010513600 D2549010600800 D2549010601200 D2549010603200 D2549010603400 D2549010606600 D2549010608200 D2549010609200 D2549020508600 D2549020508800 D2549020512000 D2549020513000 D2549020513200 D2549020514000 D2549020700000 D2549020701600 D2549020702200 D2549020703400 D2549020704000 D2549020704200 D2549020704400 D2549020705000 D2549020705200 D2549020705400 D2549020705800 D2549020707400 D2549020709600 D2549020709800 D2549020710200 D2549020710600 D2549020711000 D2549020711400 D2549020713200 D2549020714000 D2549020800600 D2549020801200 D2549020801600 D2549020802800 D2549020807000 D2549020808600 D2549020810200 D2549030400200 D2549030510800 D2549030511200 D2549030512400 D2549030512800 D2549030513400 D2549030514000 D2549030514400 D2549030601200 D2549030603400 D2549030605400 D2549030606800 D2549030607600 D2549030608600 D2549030609800 D2549030610400 D2549030611000 R225401136-000 R225401136-010 R225401136-020 R225401136-022 R225401142-000 R225401142-002 R225401152-000 R225401152-002 R225401152-004 R225401152-006 R225401195-000 R225401196-000 R225401196-002 R225401196-004 R225401196-006 R225401196-008 R225401196-034 R225401196-036 R225401196-038 R225401196-044 R225401196-046 R225401196-048 R225401196-050 R225401196-052 R225401196-054 R225401609-000 R225401618-000 R225401618-002

110. Installation of the Floor Pan

A. General

This task gives you the installation and assembly procedures of the component.

B. Procedure

WARNING: BE CAREFUL WHEN YOU USE SOLVENTS/CLEANING AGENTS, SEALANTS AND OTHER MATERIALS. OBEY THE MATERIAL MANUFACTURER'S INSTRUCTIONS AND THE LOCAL REGULATIONS. MAKE SURE THAT THERE IS A GOOD FLOW OF AIR THROUGH THE WORK AREA. DO NOT BREATHE THE FUMES. DO NOT SMOKE. DO NOT USE THESE MATERIALS NEAR A FLAME, SPARKS OR SOURCES OF HEAT. USE PROTECTIVE CLOTHING, GOGGLES AND GLOVES. IF YOU GET ONE OF THESE MATERIALS ON YOUR SKIN OR IN YOUR EYES, FLUSH IT AWAY WITH A FLOW OF CLEAN WATER. IF YOU GET ONE OF THESE MATERIALS IN YOUR MOUTH, GET IMMEDIATE MEDICAL AID. IN GENERAL, THESE MATERIALS ARE POISONOUS, FLAMMABLE AND SKIN IRRITANTS.

CAUTION: DO ALL THE WORK ON A CLEAN, SOFT SURFACE TO PREVENT DAMAGE TO THE COMPONENTS.

CAUTION: MAKE SURE THAT ALL THE PARTS ARE CLEAN BEFORE YOU ASSEMBLE THEM.

SUB TASK 25-41-51-400-145-A01

D2549010513600 D2549010600800 D2549010601200 D2549010603200 D2549010603400 D2549010606600 D2549010608200 D2549010609200 D2549020508600 D2549020508800 D2549020512000 D2549020513000 D2549020513200 D2549020514000 D2549020700000 D2549020701600 D2549020702200 D2549020703400 D2549020704000 D2549020704200 D2549020704400 D2549020705000 D2549020705200 D2549020705400 D2549020705800 D2549020707400 D2549020709600 D2549020709800 D2549020710200 D2549020710600 D2549020711000 D2549020711400 D2549020713200 D2549020800600 D2549020801200 D2549020801600 D2549020802800 D2549020808600 D2549020810200 D2549030400200 D2549030510800 D2549030511200 D2549030512400 D2549030512800 D2549030513400 D2549030514000 D2549030514400 D2549030601200 D2549030603400 D2549030605400 D2549030606800 D2549030607600 D2549030608600 D2549030609800 D2549030610400 D2549030611000 R225401136-000 R225401136-010 R225401136-020 R225401136-022 R225401142-000 R225401142-002 R225401152-000 R225401152-002 R225401152-004 R225401152-006 R225401195-000 R225401196-000 R225401196-002 R225401196-004 R225401196-006 R225401196-008 R225401196-034 R225401196-036 R225401196-038 R225401196-044 R225401196-046 R225401196-048 R225401196-050 R225401196-052 R225401196-054 R225401618-000 R225401618-002

1. Installation of the Floor Pan (13D-1)

   (a) Assemble the floor pan assembly 13D-010 as follows:

      1 If removed, attach the non-textile floor covering 13D-060 with the adhesive tape 13D-065 to the floor pan assembly 13D-010.

      2 Apply the sealant 13D-062 around the edges of the non-textile floor covering 13D-060 with the seal gun.

      3 Attach the flaps 13D-020 with the screws 13D-030, the washers 13D-040 and the nuts 13D-050 to the floor pan assembly 13D-010.

   (b) Attach the floor pan assembly 13D-010 with the screws 13D-100, 13D-110 and the washers 13D-120 to the lavatory structure.

SUB TASK 25-41-51-400-145-B01

D2549020714000 D2549020807000 R225401609-000

2. Installation of the Floor Pan (13D-1)

   (a) Assemble the floor pan assembly 13D-010 as follows:

1 Attach the screws 13D-030, the washers 13D-040 and the nuts 13D-050 to the floor pan assembly 13D-010.

(b) Attach the floor pan assembly 13D-010 with the screws 13D-100, 13D-110 and the washers 13D-120 to the lavatory structure.

TASK 25-41-51-400-813-F01
D2549010605200 D2549010605600 D2549010607600 D2549010611800 D2549020502200 D2549020509000 D2549020509600 D2549020509800 D2549020511800 D2549020709400 D2549020710000 D2549020710800 D2549020713400 D2549020713600 D2549020714400 D2549020714600 D2549020803200 D2549020809000 D2549030403000 D2549030602400 D2549030604200 D2549030607200 D2549030608400 D2549030608800 D2549030609000 D2549030610000 R225401199-002 R225401199-004 R225401199-008 R225401605-000 R225401605-002 R225401613-000 R225401693-000

111. Installation of the Floor Pan

A. General

This task gives you the installation and assembly procedures of the component.

B. Procedure

WARNING: BE CAREFUL WHEN YOU USE SOLVENTS/CLEANING AGENTS, SEALANTS AND OTHER MATERIALS. OBEY THE MATERIAL MANUFACTURER'S INSTRUCTIONS AND THE LOCAL REGULATIONS. MAKE SURE THAT THERE IS A GOOD FLOW OF AIR THROUGH THE WORK AREA. DO NOT BREATHE THE FUMES. DO NOT SMOKE. DO NOT USE THESE MATERIALS NEAR A FLAME, SPARKS OR SOURCES OF HEAT. USE PROTECTIVE CLOTHING, GOGGLES AND GLOVES. IF YOU GET ONE OF THESE MATERIALS ON YOUR SKIN OR IN YOUR EYES, FLUSH IT AWAY WITH A FLOW OF CLEAN WATER. IF YOU GET ONE OF THESE MATERIALS IN YOUR MOUTH, GET IMMEDIATE MEDICAL AID. IN GENERAL, THESE MATERIALS ARE POISONOUS, FLAMMABLE AND SKIN IRRITANTS.

CAUTION: DO ALL THE WORK ON A CLEAN, SOFT SURFACE TO PREVENT DAMAGE TO THE COMPONENTS.

CAUTION: MAKE SURE THAT ALL THE PARTS ARE CLEAN BEFORE YOU ASSEMBLE THEM.

SUB TASK 25-41-51-400-146-A01
1. Installation of the Floor Pan (13E-1)

(a) Assemble the floor pan assembly 13E-010 as follows:

1 If removed, attach the non-textile floor covering 13E-060 with the adhesive tape 13E-063 to the floor pan assembly 13E-010.

2 Apply the sealant 13E-066 around the edges of the non-textile floor covering 13E-060 with the seal gun.

3 Attach the flaps 13E-020 with the screws 13E-030, the washers 13E-040 and the nuts 13E-050 to the floor pan assembly 13E-010.

(b) Attach the floor pan assembly 13E-010 with the screws 13E-100, 13E-110 and the washers 13E-120 to the lavatory structure.

TASK 25-41-51-400-813-G01
D2549020712000 D2549020712600

112. Installation of the Floor Pan

A. General

This task gives you the installation and assembly procedures of the component.

B. Procedure

WARNING: BE CAREFUL WHEN YOU USE SOLVENTS/CLEANING AGENTS, SEALANTS AND OTHER MATERIALS. OBEY THE MATERIAL MANUFACTURER'S INSTRUCTIONS AND THE LOCAL REGULATIONS. MAKE SURE THAT THERE IS A GOOD FLOW OF AIR THROUGH THE WORK AREA. DO NOT BREATHE THE FUMES. DO NOT SMOKE. DO NOT USE THESE MATERIALS NEAR A FLAME, SPARKS OR SOURCES OF HEAT. USE PROTECTIVE CLOTHING, GOGGLES AND GLOVES. IF YOU GET ONE OF THESE MATERIALS ON YOUR SKIN OR IN YOUR EYES, FLUSH IT AWAY WITH A FLOW OF CLEAN WATER. IF YOU GET ONE OF THESE MATERIALS IN YOUR MOUTH, GET IMMEDIATE MEDICAL AID. IN GENERAL, THESE MATERIALS ARE POISONOUS, FLAMMABLE AND SKIN IRRITANTS.

CAUTION: DO ALL THE WORK ON A CLEAN, SOFT SURFACE TO PREVENT DAMAGE TO THE COMPONENTS.

CAUTION: MAKE SURE THAT ALL THE PARTS ARE CLEAN BEFORE YOU ASSEMBLE THEM.

SUB TASK 25-41-51-400-147-A01

1. Installation of the Floor Pan (13F-1)

(a) Assemble the floor pan assembly 13F-010 as follows:

1 Attach the flaps 13F-020 with the screws 13F-030, the washers 13F-040 and the nuts 13F-050 to the floor pan assembly 13F-010.

(b) Attach the floor pan assembly 13F-010 with the screws 13F-110, 13F-120 and the washers 13F-130 to the lavatory structure.

(c) Attach the floor pan assembly 13F-140 and the filler assembly 13F-200 with the screws 13F-180, 13F-190 to the floor pan assembly 13F-010 and to the lavatory structure.

(d) Attach the belt 13F-220 with the screws 13F-230 and the washers 13F-240 to the floor pan assembly 13F-140.

(e) Attach the L-angle 13F-160 with the screws 13F-170 to the floor pan assembly 13F-140.

(f) Attach the floor covering assembly 13F-150 with the screws 13F-170 to the L-angle 13F-160 and to the lavatory structure.

TASK 25-41-51-400-813-H01
D2549010606800 D2549010607000 D2549010608400 D2549010608600 D2549010609800 D2549010612200 D2549020708000 D2549020802200 D2549020803400 D2549020803600 D2549020804000 D2549030400400 D2549030402600 D2549030402800 D2549030503800 D2549030608000 D2549030612400 D2549030614600 R225401614-000

113. Installation of the Floor Pan

A. General

This task gives you the installation and assembly procedures of the component.

B. Procedure

WARNING: BE CAREFUL WHEN YOU USE SOLVENTS/CLEANING AGENTS, SEALANTS AND OTHER MATERIALS. OBEY THE MATERIAL MANUFACTURER'S INSTRUCTIONS AND THE LOCAL REGULATIONS. MAKE SURE THAT THERE IS A GOOD FLOW OF AIR THROUGH THE WORK AREA. DO NOT BREATHE THE FUMES. DO NOT SMOKE. DO NOT USE THESE MATERIALS NEAR A FLAME, SPARKS OR SOURCES OF HEAT. USE PROTECTIVE CLOTHING, GOGGLES AND GLOVES. IF YOU GET ONE OF THESE MATERIALS ON YOUR SKIN OR IN YOUR EYES, FLUSH IT AWAY WITH A FLOW OF CLEAN WATER. IF YOU GET ONE OF THESE MATERIALS IN YOUR MOUTH, GET IMMEDIATE MEDICAL AID. IN GENERAL, THESE MATERIALS ARE POISONOUS, FLAMMABLE AND SKIN IRRITANTS.

CAUTION: DO ALL THE WORK ON A CLEAN, SOFT SURFACE TO PREVENT DAMAGE TO THE COMPONENTS.

CAUTION: MAKE SURE THAT ALL THE PARTS ARE CLEAN BEFORE YOU ASSEMBLE THEM.

SUB TASK 25-41-51-400-148-A01
1. Installation of the Floor Pan (13G-1)

(a) Assemble the floor pan assembly 13G-010 as follows:

1 If removed, attach the non-textile floor covering 13G-060 with the adhesive tape 13G-063 to the floor pan assembly 13G-010.

2 Apply the sealant 13G-066 around the edges of the non-textile floor covering 13G-060 with the seal gun.

3 Attach the flaps 13G-020 with the screws 13G-030, the washers 13G-040 and the nuts 13G-050 to the floor pan assembly 13G-010.

(b) Attach the floor pan assembly 13G-010 with the screws 13G-100, 13G-110 and the washers 13G-120, 13G-130 to the lavatory structure.

TASK 25-41-51-400-813-J01

D2549010607200 D2549010607800 D2549010609400 D2549010610200 D2549010610400 D2549010611000 D2549020505600 D2549020510800 D2549020511000 D2549020512200 D2549020512400 D2549020512600 D2549020513400 D2549020514600 D2549020700800 D2549020711600 D2549020800200 D2549020800400 D2549020800800 D2549020801000 D2549020801400 D2549020803000 D2549020809400 D2549030400000 D2549030403400 D2549030403600 D2549030404400 D2549030507200 D2549030507400 D2549030508600 D2549030510200 D2549030600800 D2549030601600 D2549030603200 D2549030603600 D2549030607800 D2549030610600 D2549030611200 D2549030611400 D2549030611600 D2549030611800 D2549030612200 D2549030612600 D2549030612800 D2549030613200 D2549030613400 D2549030613800 D2549030614200 D2549030614400 D2549030614800 R225401134-012 R225401134-026 R225401134-028 R225401134-030 R225401137-016 R225401145-006 R225401168-000 R225401168-002 R225401168-004 R225401168-006 R225401168-008 R225401168-014 R225401168-016 R225401168-018 R225401168-020 R225401168-022 R225401168-024 R225401168-028 R225401172-016 R225401172-018 R225401183-000 R225401183-002 R225401199-006 R225401619-002 R225401622-000 R225401625-000

114. Installation of the Floor Pan

A. General

This task gives you the installation and assembly procedures of the component.

B. Procedure

WARNING: BE CAREFUL WHEN YOU USE SOLVENTS/CLEANING AGENTS, SEALANTS AND OTHER MATERIALS. OBEY THE MATERIAL MANUFACTURER'S INSTRUCTIONS AND THE LOCAL REGULATIONS. MAKE SURE THAT THERE IS A GOOD FLOW OF AIR THROUGH THE WORK AREA. DO NOT BREATHE THE FUMES. DO NOT SMOKE. DO NOT USE THESE MATERIALS NEAR A FLAME, SPARKS OR SOURCES OF HEAT. USE PROTECTIVE CLOTHING, GOGGLES AND GLOVES. IF YOU GET ONE OF THESE MATERIALS ON YOUR SKIN OR IN YOUR EYES, FLUSH IT AWAY WITH A FLOW OF CLEAN WATER. IF YOU GET ONE OF THESE MATERIALS IN YOUR MOUTH, GET IMMEDIATE MEDICAL AID. IN GENERAL, THESE MATERIALS ARE POISONOUS, FLAMMABLE AND SKIN IRRITANTS.

CAUTION: DO ALL THE WORK ON A CLEAN, SOFT SURFACE TO PREVENT DAMAGE TO THE COMPONENTS.

CAUTION: MAKE SURE THAT ALL THE PARTS ARE CLEAN BEFORE YOU ASSEMBLE THEM.

SUB TASK 25-41-51-400-149-A01

1. Installation of the Floor Pan (13H-1)

(a) Assemble the floor pan assembly 13H-010 as follows:

1 If removed, attach the non-textile floor covering 13H-060 with the adhesive tape 13H-063 to the floor pan assembly 13H-010.

2 Apply the sealant 13H-066 around the edges of the non-textile floor covering 13H-060 with the seal gun.

3 Attach the flaps 13H-020 with the screws 13H-030, the washers 13H-040 and the nuts 13H-050 to the floor pan assembly 13H-010.

(b) Attach the floor pan assembly 13H-010 with the screws 13H-100, 13H-120 and the washers 13H-110, 13H-130 to the lavatory structure.

TASK 25-41-51-400-813-K01

D2549010403000 D2549010613000 D2549010614200 D2549020400200 D2549020405000 D2549020405600 D2549020406200 D2549020510600 D2549020613000 D2549020805800 D2549020806000 D2549020806200 D2549020806800 D2549020807400 D2549020807600 D2549020807800 D2549020808800 D2549020810000 D2549020810600 D2549020810800 D2549020811200 D2549020811400 D2549020811800 D2549020812200 D2549020812600 D2549020813800 D2549020814400 D2549020814800 D2549030401000 D2549030402000 D2549030402200 D2549030402400 D2549030404200 D2549030404600 D2549030404800 D2549030405200 D2549030405400 D2549030405800 D2549030406400 D2549030406600 D2549030407000 D2549030407200 D2549030407600 D2549030408000 D2549030408400 D2549030410400 R225401134-032 R225401134-034 R225401134-036 R225401136-004 R225401136-018 R225401152-008 R225401168-010 R225401168-012 R225401168-026 R225401196-010 R225401196-012 R225401196-014 R225401196-016 R225401196-040 R225401196-056 R225401196-058 R225401196-060 R225401196-062 R225401611-006 R225401611-012 R225401643-000 R225401646-000 R225401647-000 R225401648-000 R225401648-002 R225401656-000 R225401656-002 R225401662-000 R225401662-002

115. Installation of the Floor Pan

A. General

This task gives you the installation and assembly procedures of the component.

B. Procedure

WARNING: BE CAREFUL WHEN YOU USE SOLVENTS/CLEANING AGENTS, SEALANTS AND OTHER MATERIALS. OBEY THE MATERIAL MANUFACTURER'S INSTRUCTIONS AND THE LOCAL REGULATIONS. MAKE SURE THAT THERE IS A GOOD FLOW OF AIR THROUGH THE WORK AREA. DO NOT BREATHE THE FUMES. DO NOT SMOKE. DO NOT USE THESE MATERIALS NEAR A FLAME, SPARKS OR SOURCES OF HEAT. USE PROTECTIVE CLOTHING, GOGGLES AND GLOVES. IF YOU GET ONE OF THESE MATERIALS ON YOUR SKIN OR IN YOUR EYES, FLUSH IT AWAY WITH A FLOW OF CLEAN WATER. IF YOU GET ONE OF THESE MATERIALS IN YOUR MOUTH, GET IMMEDIATE MEDICAL AID. IN GENERAL, THESE MATERIALS ARE POISONOUS, FLAMMABLE AND SKIN IRRITANTS.

CAUTION: DO ALL THE WORK ON A CLEAN, SOFT SURFACE TO PREVENT DAMAGE TO THE COMPONENTS.

CAUTION: MAKE SURE THAT ALL THE PARTS ARE CLEAN BEFORE YOU ASSEMBLE THEM.

SUB TASK 25-41-51-400-150-A01

1. Installation of the Floor Pan (13J-1)

(a) Assemble the floor pan assembly 13J-010 as follows:

1 Attch the non textile floor-covering 13J-60 with the adhesive tape 13J-64 and the sealant 13J-62.

2 Attach the flaps 13J-020 with the screws 13J-030, the washers 13J-040 and the nuts 13J-050 to the floor pan assembly 13J-010.

(b) Attach the floor pan assembly 13J-010 with the screws 13J-100, 13J-120 and the washers 13J-110, 13J-130 to the lavatory structure.

TASK 25-41-51-400-813-L01

D2549010400200 D2549010400400 D2549010400600 D2549010610800 D2549010611200 D2549010612400 D2549010612600 D2549010613200 D2549010613400 D2549010614400 D2549010614800 D2549020404200 D2549020404400 D2549020405200 D2549020513800 D2549020804200 D2549020804800 D2549020805400 D2549020811600 D2549020812000 D2549020812400 D2549020812800 D2549020814000 D2549020814600 D2549030400600 D2549030401200 D2549030401800 D2549030404000 D2549030405000 D2549030406800 D2549030407800 D2549030409800 R225401145-010 R225401622-002

116. Installation of the Floor Pan

A. General

This task gives you the installation and assembly procedures of the component.

B. Procedure

WARNING: BE CAREFUL WHEN YOU USE SOLVENTS/CLEANING AGENTS, SEALANTS AND OTHER MATERIALS. OBEY THE MATERIAL MANUFACTURER'S INSTRUCTIONS AND THE LOCAL REGULATIONS. MAKE SURE THAT THERE IS A GOOD FLOW OF AIR THROUGH THE WORK AREA. DO NOT BREATHE THE FUMES. DO NOT SMOKE. DO NOT USE THESE MATERIALS NEAR A FLAME, SPARKS OR SOURCES OF HEAT. USE PROTECTIVE CLOTHING, GOGGLES AND GLOVES. IF YOU GET ONE OF THESE MATERIALS ON YOUR SKIN OR IN YOUR EYES, FLUSH IT AWAY WITH A FLOW OF CLEAN WATER. IF YOU GET ONE OF THESE MATERIALS IN YOUR MOUTH, GET IMMEDIATE MEDICAL AID. IN GENERAL, THESE MATERIALS ARE POISONOUS, FLAMMABLE AND SKIN IRRITANTS.

CAUTION: DO ALL THE WORK ON A CLEAN, SOFT SURFACE TO PREVENT DAMAGE TO THE COMPONENTS.

CAUTION: MAKE SURE THAT ALL THE PARTS ARE CLEAN BEFORE YOU ASSEMBLE THEM.

SUB TASK 25-41-51-400-151-A01

1. Installation of the Floor Pan (13K-1)

(a) Assemble the floor pan assembly 13K-010 as follows:

1 Attach the flaps 13K-020 with the screws 13K-030, the washers 13K-040 and the nuts 13K-050 to the floor pan assembly 13K-010.

(b) Attach the floor pan assembly 13K-010 with the screws 13K-100, 13K-120 and the washers 13K-110, 13K-130 to the lavatory structure.

TASK 25-41-51-400-813-M01

D2549010611400 D2549020400400 D2549020404600 D2549020405400 D2549020405800 D2549020713000 D2549020801800 D2549020802400 D2549020806400 D2549020806600 D2549020810400 D2549020813000 D2549020813200 D2549020813400 D2549020813600 D2549030401600 D2549030406000 D2549030407400 D2549030408600 D2549030614000 D2549040500200 R225401199-000 R225401199-010 R225401639-000 R225401639-002 R225401643-002 R225401643-004

117. Installation of the Floor Pan

A. General

This task gives you the installation and assembly procedures of the component.

B. Procedure

WARNING: BE CAREFUL WHEN YOU USE SOLVENTS/CLEANING AGENTS, SEALANTS AND OTHER MATERIALS. OBEY THE MATERIAL MANUFACTURER'S INSTRUCTIONS AND THE LOCAL REGULATIONS. MAKE SURE THAT THERE IS A GOOD FLOW OF AIR THROUGH THE WORK AREA. DO NOT BREATHE THE FUMES. DO NOT SMOKE. DO NOT USE THESE MATERIALS NEAR A FLAME, SPARKS OR SOURCES OF HEAT. USE PROTECTIVE CLOTHING, GOGGLES AND GLOVES. IF YOU GET ONE OF THESE MATERIALS ON YOUR SKIN OR IN YOUR EYES, FLUSH IT AWAY WITH A FLOW OF CLEAN WATER. IF YOU GET ONE OF THESE MATERIALS IN YOUR MOUTH, GET IMMEDIATE MEDICAL AID. IN GENERAL, THESE MATERIALS ARE POISONOUS, FLAMMABLE AND SKIN IRRITANTS.

CAUTION: DO ALL THE WORK ON A CLEAN, SOFT SURFACE TO PREVENT DAMAGE TO THE COMPONENTS.

CAUTION: MAKE SURE THAT ALL THE PARTS ARE CLEAN BEFORE YOU ASSEMBLE THEM.

SUB TASK 25-41-51-400-152-A01

1. Installation of the Floor Pan (13L-1)

(a) Assemble the floor pan assembly 13L-010 as follows:

1 Attach the flaps 13L-020 with the screws 13L-030, the washers 13L-040 and the nuts 13L-050 to the floor pan assembly 13L-010.

(b) Attach the floor pan assembly 13L-010 with the screws 13L-100, 13L-120 and the washers 13L-110, 13L-130 to the lavatory structure.

TASK 25-41-51-400-813-N01
D2549010400800 D2549020400000 D2549020805200 D2549030408200 D2549040500600
R225401673-000

118. Installation of the Floor Pan

A. General

This task gives you the installation and assembly procedures of the component.

B. Procedure

WARNING: **BE CAREFUL WHEN YOU USE SOLVENTS/CLEANING AGENTS, SEALANTS AND OTHER MATERIALS. OBEY THE MATERIAL MANUFACTURER'S INSTRUCTIONS AND THE LOCAL REGULATIONS. MAKE SURE THAT THERE IS A GOOD FLOW OF AIR THROUGH THE WORK AREA. DO NOT BREATHE THE FUMES. DO NOT SMOKE. DO NOT USE THESE MATERIALS NEAR A FLAME, SPARKS OR SOURCES OF HEAT. USE PROTECTIVE CLOTHING, GOGGLES AND GLOVES. IF YOU GET ONE OF THESE MATERIALS ON YOUR SKIN OR IN YOUR EYES, FLUSH IT AWAY WITH A FLOW OF CLEAN WATER. IF YOU GET ONE OF THESE MATERIALS IN YOUR MOUTH, GET IMMEDIATE MEDICAL AID. IN GENERAL, THESE MATERIALS ARE POISONOUS, FLAMMABLE AND SKIN IRRITANTS.**

CAUTION: **DO ALL THE WORK ON A CLEAN, SOFT SURFACE TO PREVENT DAMAGE TO THE COMPONENTS.**

CAUTION: **MAKE SURE THAT ALL THE PARTS ARE CLEAN BEFORE YOU ASSEMBLE THEM.**

SUB TASK 25-41-51-400-153-A01

1. Installation of the Floor Pan (13M-1)

(a) Assemble the floor pan assembly 13M-010 as follows:

1 Attach the flaps 13M-020 with the screws 13M-030, the washers 13M-040 and the nuts 13M-050 to the floor pan assembly 13M-010.

(b) Attach the floor pan assembly 13M-010 with the screws 13M-100, 13M-120 and the washers 13M-110, 13M-130 to the lavatory structure.

TASK 25-41-51-400-813-P01

D2549010401800 D2549010403400 D2549010403600 D2549010404000 D2549010404200 D2549010405200 D2549010406000 D2549010406800 D2549020300000 D2549020301800 D2549020302000 D2549020400600 D2549020400800 D2549020401200 D2549020401400 D2549020402200 D2549020402600 D2549020403000 D2549020403200 D2549020403400 D2549020404000 D2549020406000 D2549020406600 D2549020407200 D2549020407400 D2549020407600 D2549020408000 D2549020408200 D2549020408600 D2549020409400 D2549020410400 D2549020411000 D2549020411200 D2549020411600 D2549020412600 D2549020413400 D2549020807200 D2549020809600 D2549030409000 D2549030409200 D2549030409600 D2549030410000 D2549030410200 D2549030411200 D2549030411800 D2549030412000 D2549030412200 D2549030412800 D2549030413400 D2549030414000 D2549030414600 D2549030700000 D2549030700200 D2549030700600 D2549030701000 D2549030702600 D2549030703400 D2549030703600 D2549030703800 D2549030704200 D2549030704400 D2549030704800 D2549030705200 D2549030705600 R225401134-014 R225401134-038 R225401136-006 R225401136-012 R225401136-024 R225401196-018 R225401196-064 R225401627-000 R225401627-002 R225401627-004 R225401671-000 R225401671-002 R225401675-000 R225401683-000 R225401688-000 R225401689-004 R225401689-006 R225401697-000 R225401697-002

119. Installation of the Floor Pan

A. General

This task gives you the installation and assembly procedures of the component.

B. Procedure

WARNING: BE CAREFUL WHEN YOU USE SOLVENTS/CLEANING AGENTS, SEALANTS AND OTHER MATERIALS. OBEY THE MATERIAL MANUFACTURER'S INSTRUCTIONS AND THE LOCAL REGULATIONS. MAKE SURE THAT THERE IS A GOOD FLOW OF AIR THROUGH THE WORK AREA. DO NOT BREATHE THE FUMES. DO NOT SMOKE. DO NOT USE THESE MATERIALS NEAR A FLAME, SPARKS OR SOURCES OF HEAT. USE PROTECTIVE CLOTHING, GOGGLES AND GLOVES. IF YOU GET ONE OF THESE MATERIALS ON YOUR SKIN OR IN YOUR EYES, FLUSH IT AWAY WITH A FLOW OF CLEAN WATER. IF YOU GET ONE OF THESE MATERIALS IN YOUR MOUTH, GET IMMEDIATE MEDICAL AID. IN GENERAL, THESE MATERIALS ARE POISONOUS, FLAMMABLE AND SKIN IRRITANTS.

CAUTION: DO ALL THE WORK ON A CLEAN, SOFT SURFACE TO PREVENT DAMAGE TO THE COMPONENTS.

CAUTION: MAKE SURE THAT ALL THE PARTS ARE CLEAN BEFORE YOU ASSEMBLE THEM.

SUB TASK 25-41-51-400-154-A01

1. Installation of the Floor Pan (13N-1)

   (a) Assemble the floor panel assembly 13N-030 as follows:

      1 Attach the floor-panel end strip 13N-040 with the screws 13N-050 to the floor panel assembly 13N-030.

   (b) Attach the floor panel assembly 13N-030 with the screws 13N-180 to the lavatory structure.

   (c) Attach the angle 13N-120 with the screws 13N-130 and the washers 13N-140 to the floor panel assembly 13N-030.

   (d) Attach the angles 13N-090, 13N-100 with the screws 13N-110 to the floor panel assembly 13N-030.

   (e) Attach the angles 13N-150 with the screws 13N-160, the washers 13N-140 and the nuts 13N-170 to the floor-panel end-strip 13N-040.

   (f) Assembly of the Floor Pan Assembly 13N-010

      1 Attach the non textile floor-covering 13N-20 with the adhesive tape 13N-24 and the sealant 13N-22.

   (g) Attach the floor pan assembly 13N-010 with the screws 13N-190, 13N-210 and the washers 13N-200, 13N-220, 13N-230 to the angles 13N-090, 13N-100 and to the lavatory structure.

TASK 25-41-51-400-813-Q01

D2549010401000 D2549010402200 D2549010403200 D2549010405000 D2549010405800 D2549010407000 D2549010610600 D2549020401000 D2549020401600 D2549020403600 D2549020406400 D2549020406800 D2549020407000 D2549020407800 D2549020804400 D2549030409400 D2549030410600 D2549030411400 D2549030412400 D2549030412600 D2549030413200 D2549040500400 D2549040500800 D2549040501000 D2549040501400 D2549040501800 D2549040502000 R225401152-010 R225401183-004 R225401196-020 R225401196-042 R225401196-066 R225401602-000 R225401611-000 R225401611-014 R225401611-016 R225401624-000 R225401643-006 R225401643-008 R225401646-002 R225401648-004 R225401648-006 R225401648-008 R225401649-000 R225401673-002 R225401673-004 R225401673-006 R225401676-000 R225401685-000 R225401803-000 R225401803-002

120. Installation of the Floor Pan

A. General

This task gives you the installation and assembly procedures of the component.

B. Procedure

WARNING: BE CAREFUL WHEN YOU USE SOLVENTS/CLEANING AGENTS, SEALANTS AND OTHER MATERIALS. OBEY THE MATERIAL MANUFACTURER'S INSTRUCTIONS AND THE LOCAL REGULATIONS. MAKE SURE THAT THERE IS A GOOD FLOW OF AIR THROUGH THE WORK AREA. DO NOT BREATHE THE FUMES. DO NOT SMOKE. DO NOT USE THESE MATERIALS NEAR A FLAME, SPARKS OR SOURCES OF HEAT. USE PROTECTIVE CLOTHING, GOGGLES AND GLOVES. IF YOU GET ONE OF THESE MATERIALS ON YOUR SKIN OR IN YOUR EYES, FLUSH IT AWAY WITH A FLOW OF CLEAN WATER. IF YOU GET ONE OF THESE MATERIALS IN YOUR MOUTH, GET IMMEDIATE MEDICAL AID. IN GENERAL, THESE MATERIALS ARE POISONOUS, FLAMMABLE AND SKIN IRRITANTS.

CAUTION: DO ALL THE WORK ON A CLEAN, SOFT SURFACE TO PREVENT DAMAGE TO THE COMPONENTS.

CAUTION: MAKE SURE THAT ALL THE PARTS ARE CLEAN BEFORE YOU ASSEMBLE THEM.

SUB TASK 25-41-51-400-155-A01

1. Installation of the Floor Pan (13P-1)

(a) Assemble the floor panel assembly 13P-050 as follows:

1 Attach the floor-panel end strip 13P-060 with the screws 13P-070 to the floor panel assembly 13P-050.

(b) Attach the floor panel assembly 13P-050 with the screws 13P-200 to the lavatory structure.

(c) Attach the angle 13P-140 with the screws 13P-150 and the washers 13P-160 to the floor panel assembly 13P-050.

(d) Attach the angles 13P-110, 13P-120 with the screws 13P-130 to the floor panel assembly 13P-050.

(e) Attach the angles 13P-170 with the screws 13P-180, the washers 13P-160 and the nuts 13P-190 to the floor-panel end strip 13P-060.

(f) Assemble the floor panel assembly 13P-010 as follows:

1 If removed, attach the non-textile floor covering 13P-040 with the adhesive tape 13P-030 to the floor pan 13P-020.

2 Apply the sealant 13P-045 around the edges of the non-textile floor covering 13P-040 with the seal gun.

(g) Attach the floor pan assembly 13P-010 with the screws 13P-210, 13P-230 and the washers 13P-220, 13P-240, 13P-250 to the angles 13P-110, 13P-120 and to the lavatory structure.

TASK 25-41-51-400-813-R01

D2547160900200 D2547160900400 D2549010401400 D2549010401600 D2549010403800 D2549010404400 D2549010406200 D2549010613600 D2549020300400 D2549020300600 D2549020300800 D2549020302800 D2549020402400 D2549020408800 D2549020409000 D2549020409200 D2549020409600 D2549020409800 D2549020410600 D2549030410800 D2549030413000 D2549030414200 D2549030414400 D2549030701600 D2549030702400 D2549030704000 D2549040501600 R225401196-022 R225401196-024 R225401196-068 R225401196-070 R225401691-000 R225401691-002

121. Installation of the Floor Pan

A. General

This task gives you the installation and assembly procedures of the component.

B. Procedure

WARNING: BE CAREFUL WHEN YOU USE SOLVENTS/CLEANING AGENTS, SEALANTS AND OTHER MATERIALS. OBEY THE MATERIAL MANUFACTURER'S INSTRUCTIONS AND THE LOCAL REGULATIONS. MAKE SURE THAT THERE IS A GOOD FLOW OF AIR THROUGH THE WORK AREA. DO NOT BREATHE THE FUMES. DO NOT SMOKE. DO NOT USE THESE MATERIALS NEAR A FLAME, SPARKS OR SOURCES OF HEAT. USE PROTECTIVE CLOTHING, GOGGLES AND GLOVES. IF YOU GET ONE OF THESE MATERIALS ON YOUR SKIN OR IN YOUR EYES, FLUSH IT AWAY WITH A FLOW OF CLEAN WATER. IF YOU GET ONE OF THESE MATERIALS IN YOUR MOUTH, GET IMMEDIATE MEDICAL AID. IN GENERAL, THESE MATERIALS ARE POISONOUS, FLAMMABLE AND SKIN IRRITANTS.

CAUTION: DO ALL THE WORK ON A CLEAN, SOFT SURFACE TO PREVENT DAMAGE TO THE COMPONENTS.

CAUTION: MAKE SURE THAT ALL THE PARTS ARE CLEAN BEFORE YOU ASSEMBLE THEM.

SUB TASK 25-41-51-400-156-A01

1. Installation of the Floor Pan (13Q-1)

(a) If removed, attach the non-textile floor covering 13Q-040 with the adhesive tape 13Q-045 to the floor pan assembly 13Q-010.

(b) Apply the sealant 13Q-045 around the edges of the non-textile floor covering 13Q-040 with the seal gun.

(c) Assemble the floor panel assembly 13Q-050 as follows:

1 Attach the floor-panel end strip 13Q-060 with the screws 13Q-070 to the floor panel assembly 13Q-050.

(d) Attach the floor panel assembly 13Q-050 with the screws 13Q-200 to the lavatory structure.

(e) Attach the angle 13Q-140 with the screws 13Q-150 and the washers 13Q-160 to the floor panel assembly 13Q-050.

(f) Attach the angles 13Q-110, 13Q-120 with the screws 13Q-130 to the floor panel assembly 13Q-050.

(g) Attach the angles 13Q-170 with the screws 13Q-180, the washers 13Q-160 and the nuts 13Q-190 to the floor-panel end strip 13Q-060.

(h) Attach the floor pan assembly 13Q-010 with the screws 13Q-210, 13Q-230 and the washers 13Q-220, 13Q-240, 13Q-250 to the angles 13Q-110, 13Q-120 and to the lavatory structure.

TASK 25-41-51-400-813-S01
D2549010607400 D2549010609000 D2549010611600 D2549010612000 D2549020609200 D2549020612000 D2549020702800 D2549020704600 D2549020707600 D2549030411600 D2549030414800 D2549030506000 D2549030508400 D2549030510000 D2549030601400 D2549030602200 D2549030604400 D2549030608200 D2549030702800 R225401160-000 R225401160-002

122. Installation of the Floor Pan

A. General

This task gives you the installation and assembly procedures of the component.

B. Procedure

WARNING: BE CAREFUL WHEN YOU USE SOLVENTS/CLEANING AGENTS, SEALANTS AND OTHER MATERIALS. OBEY THE MATERIAL MANUFACTURER'S INSTRUCTIONS AND THE LOCAL REGULATIONS. MAKE SURE THAT THERE IS A GOOD FLOW OF AIR THROUGH THE WORK AREA. DO NOT BREATHE THE FUMES. DO NOT SMOKE. DO NOT USE THESE MATERIALS NEAR A FLAME, SPARKS OR SOURCES OF HEAT. USE PROTECTIVE CLOTHING, GOGGLES AND GLOVES. IF YOU GET ONE OF THESE MATERIALS ON YOUR SKIN OR IN YOUR EYES, FLUSH IT AWAY WITH A FLOW OF CLEAN WATER. IF YOU GET ONE OF THESE MATERIALS IN YOUR MOUTH, GET IMMEDIATE MEDICAL AID. IN GENERAL, THESE MATERIALS ARE POISONOUS, FLAMMABLE AND SKIN IRRITANTS.

CAUTION: DO ALL THE WORK ON A CLEAN, SOFT SURFACE TO PREVENT DAMAGE TO THE COMPONENTS.

CAUTION: MAKE SURE THAT ALL THE PARTS ARE CLEAN BEFORE YOU ASSEMBLE THEM.

SUB TASK 25-41-51-400-157-A01
1. Installation of the Floor Pan (13R-1)

(a) Assemble the floor panel assembly 13R-030 as follows:

1 Attach the floor-panel end strip 13R-040 with the screws 13R-050 to the floor panel assembly 13R-030.

(b) Attach the floor panel assembly 13R-030 with the screws 13R-180 to the lavatory structure.

(c) Attach the angle 13R-120 with the screws 13R-130 and the washers 13R-140 to the floor panel assembly 13R-030.

(d) Attach the angles 13R-090, 13R-100 with the screws 13R-110 to the floor panel assembly 13R-030.

(e) Attach the angles 13R-150 with the screws 13R-160, the washers 13R-140 and the nuts 13R-170 to the floor panel end-strip 13R-040.

(f) Attach the screws 13R-190, 13R-210 and the washers 13R-200, 13R-220, 13R-230 to the angles 13R-090, 13R-100 and to the lavatory structure.

TASK 25-41-51-400-813-T01

D2549010402400 D2549010404600 D2549010404800 D2549010405400 D2549010405600 D2549010406400 D2549020301000 D2549020301600 D2549020402000 D2549020410200 D2549020410800 D2549020411400 D2549020411800 D2549020412000 D2549020412200 D2549020412400 D2549020412800 D2549020413000 D2549020413200 D2549020413600 D2549020413800 D2549020414000 D2549020414200 D2549020414600 D2549020414800 D2549030413600 D2549030700400 D2549030700800 D2549030701400 D2549030701800 D2549030702000 D2549030702200 D2549030703000 D2549030703200 D2549030704600 D2549040501200 R225401136-008 R225401136-014 R225401183-006 R225401199-012 R225401611-018 R225401611-020 R225401685-002 R225401808-000 R225401811-000 R225401814-000

123. Installation of the Floor Pan

A. General

This task gives you the installation and assembly procedures of the component.

B. Procedure

WARNING: BE CAREFUL WHEN YOU USE SOLVENTS/CLEANING AGENTS, SEALANTS AND OTHER MATERIALS. OBEY THE MATERIAL MANUFACTURER'S INSTRUCTIONS AND THE LOCAL REGULATIONS. MAKE SURE THAT THERE IS A GOOD FLOW OF AIR THROUGH THE WORK AREA. DO NOT BREATHE THE FUMES. DO NOT SMOKE. DO NOT USE THESE MATERIALS NEAR A FLAME, SPARKS OR SOURCES OF HEAT. USE PROTECTIVE CLOTHING, GOGGLES AND GLOVES. IF YOU GET ONE OF THESE MATERIALS ON YOUR SKIN OR IN YOUR EYES, FLUSH IT AWAY WITH A FLOW OF CLEAN WATER. IF YOU GET ONE OF THESE MATERIALS IN YOUR MOUTH, GET IMMEDIATE MEDICAL AID. IN GENERAL, THESE MATERIALS ARE POISONOUS, FLAMMABLE AND SKIN IRRITANTS.

CAUTION: DO ALL THE WORK ON A CLEAN, SOFT SURFACE TO PREVENT DAMAGE TO THE COMPONENTS.

CAUTION: MAKE SURE THAT ALL THE PARTS ARE CLEAN BEFORE YOU ASSEMBLE THEM.

SUB TASK 25-41-51-400-158-A01

1. Installation of the Floor Pan (13S-1)

(a) Assemble the floor panel assembly 13S-050 as follows:

1 Attach the floor-panel end strip 13S-060 with the screws 13S-070 to the floor panel assembly 13S-050.

(b) Attach the floor panel assembly 13S-050 with the screws 13S-200 to the lavatory structure.

(c) Attach the angle 13S-140 with the screws 13S-150 and the washers 13S-160 to the floor panel assembly 13S-050.

(d) Attach the angles 13S-110, 13S-120 with the screws 13S-130 to the floor panel assembly 13S-050.

(e) Attach the angles 13S-170 with the screws 13S-180, the washers 13S-160 and the nuts 13S-190 to the floor-panel end strip 13S-060.

(f) Attach the floor pan assembly 13S-010 with the screws 13S-210, 13S-230 and the washers 13S-220, 13S-240, 13S-250 to the angles 13S-110, 13S-120 and to the lavatory structure.

TASK 25-41-51-400-813-U01

D2549010400000 D2549010402000 D2549010402600 D2549010402800 D2549010510200 D2549010514200 D2549010610000 D2549010613800 D2549010614600 D2549020403800 D2549020404800 D2549020511600 D2549020514800 D2549020606000 D2549020608800 D2549020706400 D2549020707800 D2549020708800 D2549020800000 D2549020802000 D2549020802600 D2549020805000 D2549020805600 D2549020808200 D2549020808400 D2549020809800 D2549020814200 D2549030401400 D2549030405600 D2549030511600 D2549030512200 D2549030600000 D2549030603000 D2549030604600 D2549030606000 D2549030606400 D2549030612000 R225401107-004 R225401192-002 R225401611-008 R225401611-010 R225401629-000 R225401629-002 R225401658-000

124. Installation of the Floor Pan

A. General

This task gives you the installation and assembly procedures of the component.

B. Procedure

WARNING: BE CAREFUL WHEN YOU USE SOLVENTS/CLEANING AGENTS, SEALANTS AND OTHER MATERIALS. OBEY THE MATERIAL MANUFACTURER'S INSTRUCTIONS AND THE LOCAL REGULATIONS. MAKE SURE THAT THERE IS A GOOD FLOW OF AIR THROUGH THE WORK AREA. DO NOT BREATHE THE FUMES. DO NOT SMOKE. DO NOT USE THESE MATERIALS NEAR A FLAME, SPARKS OR SOURCES OF HEAT. USE PROTECTIVE CLOTHING, GOGGLES AND GLOVES. IF YOU GET ONE OF THESE MATERIALS ON YOUR SKIN OR IN YOUR EYES, FLUSH IT AWAY WITH A FLOW OF CLEAN WATER. IF YOU GET ONE OF THESE MATERIALS IN YOUR MOUTH, GET IMMEDIATE MEDICAL AID. IN GENERAL, THESE MATERIALS ARE POISONOUS, FLAMMABLE AND SKIN IRRITANTS.

CAUTION: DO ALL THE WORK ON A CLEAN, SOFT SURFACE TO PREVENT DAMAGE TO THE COMPONENTS.

CAUTION: MAKE SURE THAT ALL THE PARTS ARE CLEAN BEFORE YOU ASSEMBLE THEM.

SUB TASK 25-41-51-400-159-A01

1. Installation of the Floor Pan (13T-1)

(a) Assemble the floor panel assembly 13T-040 as follows:

1 Attach the floor-panel end strip 13T-050 with the screws 13T-060 to the lavatory structure.

(b) Attach the floor panel assembly 13T-040 with the screws 13T-190 to the lavatory structure.

(c) Attach the angle 13T-130 with the screws 13T-140 and the washers 13T-150 to the floor panel assembly 13T-040.

(d) Attach the angle 13T-130 with the screws 13T-260 and the washers 13T-270 to the lavatory structure.

(e) Attach the angles 13T-160 with the screws 13T-260 and the washers 13T-270 to the lavatory structure.

(f) Attach the angles 13T-100, 13T-110 with the screws 13T-120 to the floor panel assembly 13T-040.

(g) Attach the angles 13T-160 with the screws 13T-170, the washers 13T-150 and the nuts 13T-180 to the floor-panel end strip 13T-050.

(h) Attach the lavatory floor assembly 13T-010 with the screws 13T-210, 13T-230, 13T-250, 13T-260 and the washers 13T-220, 13T-240, 13T-270 to the angles 13T-100, 13T-110, to the floor panel assembly 13T-040 and to the lavatory structure.

TASK 25-41-51-400-813-V01
D2549010502000 D2549010504200 D2549010504800 D2549010508400 D2549010509000 D2549010511200 D2549010513200 D2549010601000 D2549020500200 D2549020504000 D2549020600000 D2549020601200 D2549020603200 D2549020710400 R225401107-002

125. Installation of the Floor Pan

A. General

This task gives you the installation and assembly procedures of the component.

B. Procedure

WARNING: BE CAREFUL WHEN YOU USE SOLVENTS/CLEANING AGENTS, SEALANTS AND OTHER MATERIALS. OBEY THE MATERIAL MANUFACTURER'S INSTRUCTIONS AND THE LOCAL REGULATIONS. MAKE SURE THAT THERE IS A GOOD FLOW OF AIR THROUGH THE WORK AREA. DO NOT BREATHE THE FUMES. DO NOT SMOKE. DO NOT USE THESE MATERIALS NEAR A FLAME, SPARKS OR SOURCES OF HEAT. USE PROTECTIVE CLOTHING, GOGGLES AND GLOVES. IF YOU GET ONE OF THESE MATERIALS ON YOUR SKIN OR IN YOUR EYES, FLUSH IT AWAY WITH A FLOW OF CLEAN WATER. IF YOU GET ONE OF THESE MATERIALS IN YOUR MOUTH, GET IMMEDIATE MEDICAL AID. IN GENERAL, THESE MATERIALS ARE POISONOUS, FLAMMABLE AND SKIN IRRITANTS.

CAUTION: DO ALL THE WORK ON A CLEAN, SOFT SURFACE TO PREVENT DAMAGE TO THE COMPONENTS.

CAUTION: MAKE SURE THAT ALL THE PARTS ARE CLEAN BEFORE YOU ASSEMBLE THEM.

SUB TASK 25-41-51-400-160-A01

1. Installation of the Floor Pan (13U-1)

(a) Assemble the floor panel assembly 13U-060 as follows:

1 Attach the floor-panel end strip 13U-070 with the screws 13U-080 to the floor panel assembly 13U-060.

(b) Attach the floor panel assembly 13U-060 with the screws 13U-220 to the lavatory structure.

(c) Attach the angle 13U-160 with the screws 13U-170 and the washers 13U-180 to the floor panel assembly 13U-060.

(d) Attach the angles 13U-190 with the screws 13U-350 and the washers 13U-360 to the lavatory structure.

(e) Attach the angle 13U-160 with the screws 13U-350 and the washers 13U-360 to the lavatory structure.

(f) Attach the angles 13U-130, 13U-140 with the screws 13U-150 to the floor panel assembly 13U-060.

(g) Attach the angle 13U-130 with the screws 13U-350 and the washers 13U-360 to the lavatory structure.

(h) Attach the angles 13U-190 with the screws 13U-200, the washers 13U-180 and the nuts 13U-210 to the floor-panel end strip 13U-070.

(i) Install and assemble the flap assemblies 13U-290 as follows:

1 Attach the angles 13U-040, 13U-050 with the screws 13U-240 and the washers 13U-250 to the floor panel assembly 13U-060.

WARNING: BE VERY CAREFUL WHEN YOU REMOVE OR INSTALL THE SPRING. BECAUSE THERE IS REMAINING TENSION IN THE SPRING, IT CAN CAUSE YOU INJURY.

2 Attach the springs 13U-310.

3 Attach the flap assemblies 13U-290 with the screws 13U-280, the washers 13U-270 and the nuts 13U-260 to the angles 13U-040, 13U-050.

(j) Attach the lavatory floor assembly 13U-010 with the screws 13U-320, 13U-340 and the washers 13U-330, 13U-360 to the angles 13U-130, 13U-140 and to the lavatory structure.

TASK 25-41-51-400-813-W01
D2549010501000 D2549010502400 D2549010601600 D2549010606000 D2549010606200 D2549020501000 D2549020503000 D2549020506200 D2549020510000 D2549020601600 D2549020606800 D2549020607000 D2549020610800 D2549020614800 D2549020700400 D2549020700600 D2549020705600 D2549020706000 D2549020709200 D2549030500800 D2549030502000 D2549030502800 D2549030504000 D2549030600200 R225401107-000 R225401133-000 R225401159-000 R225401188-004 R225401192-000

126. Installation of the Floor Pan

A. General

This task gives you the installation and assembly procedures of the component.

B. Procedure

WARNING: BE CAREFUL WHEN YOU USE SOLVENTS/CLEANING AGENTS, SEALANTS AND OTHER MATERIALS. OBEY THE MATERIAL MANUFACTURER'S INSTRUCTIONS AND THE LOCAL REGULATIONS. MAKE SURE THAT THERE IS A GOOD FLOW OF AIR THROUGH THE WORK AREA. DO NOT BREATHE THE FUMES. DO NOT SMOKE. DO NOT USE THESE MATERIALS NEAR A FLAME, SPARKS OR SOURCES OF HEAT. USE PROTECTIVE CLOTHING, GOGGLES AND GLOVES. IF YOU GET ONE OF THESE MATERIALS ON YOUR SKIN OR IN YOUR EYES, FLUSH IT AWAY WITH A FLOW OF CLEAN WATER. IF YOU GET ONE OF THESE MATERIALS IN YOUR MOUTH, GET IMMEDIATE MEDICAL AID. IN GENERAL, THESE MATERIALS ARE POISONOUS, FLAMMABLE AND SKIN IRRITANTS.

CAUTION: DO ALL THE WORK ON A CLEAN, SOFT SURFACE TO PREVENT DAMAGE TO THE COMPONENTS.

CAUTION: MAKE SURE THAT ALL THE PARTS ARE CLEAN BEFORE YOU ASSEMBLE THEM.

SUB TASK 25-41-51-400-161-A01
1. Installation of the Floor Pan (13V-1)

(a) Assemble the floor pan assembly 13V-010 as follows:

1 Attach the flap assemblies 13V-020 with the screws 13V-030, the washers 13V-040 and the nuts 13V-050 to the floor pan assembly 13V-010.

(b) Attach the floor pan assembly 13V-010 with the screws 13V-090, 13V-100 and the washers 13V-110, 13V-120 to the lavatory structure.

TASK 25-41-51-400-813-X01
D2549030610200 D2549030701200

127. Installation of the Floor Pan

A. General

This task gives you the installation and assembly procedures of the component.

B. Procedure

WARNING: BE CAREFUL WHEN YOU USE SOLVENTS/CLEANING AGENTS, SEALANTS AND OTHER MATERIALS. OBEY THE MATERIAL MANUFACTURER'S INSTRUCTIONS AND THE LOCAL REGULATIONS. MAKE SURE THAT THERE IS A GOOD FLOW OF AIR THROUGH THE WORK AREA. DO NOT BREATHE THE FUMES. DO NOT SMOKE. DO NOT USE THESE MATERIALS NEAR A FLAME, SPARKS OR SOURCES OF HEAT. USE PROTECTIVE CLOTHING, GOGGLES AND GLOVES. IF YOU GET ONE OF THESE MATERIALS ON YOUR SKIN OR IN YOUR EYES, FLUSH IT AWAY WITH A FLOW OF CLEAN WATER. IF YOU GET ONE OF THESE MATERIALS IN YOUR MOUTH, GET IMMEDIATE MEDICAL AID. IN GENERAL, THESE MATERIALS ARE POISONOUS, FLAMMABLE AND SKIN IRRITANTS.

CAUTION: DO ALL THE WORK ON A CLEAN, SOFT SURFACE TO PREVENT DAMAGE TO THE COMPONENTS.

CAUTION: MAKE SURE THAT ALL THE PARTS ARE CLEAN BEFORE YOU ASSEMBLE THEM.

SUB TASK 25-41-51-400-162-A01
D2549030610200

1. Installation of the Floor Pan (13W-1)

(a) Assemble the floor panel assembly 13W-080 as follows:

1 Attach the angle 13W-130 with the screws 13W-170 and the washers 13W-185 to the floor panel assembly 13W-080.

2 Attach the angles 13W-110, 13W-120 with the screws 13W-160 to the floor panel assembly 13W-080.

(b) Attach the floor panel assembly 13W-080 with the screws 13W-210 to the lavatory structure.

(c) Attach the floor pan assembly 13W-010 with the screws 13W-040, 13W-060, 13W-260 and the washers 13W-050, 13W-070, 13W-270 to the floor panel assembly 13W-080, to the angles 13W-110, 13W-120 and to the lavatory structure.

SUB TASK 25-41-51-400-162-B01
D2549030701200

2. Installation of the Floor Pan (13W-1)

(a) Assemble the floor pan assembly 13W-080 as follows:

1 Attach the floor-panel end strip 13W-090 with the screws 13W-100 to the floor pan assembly 13W-080.

2 Attach the angle 13W-130 with the screws 13W-170 and the washers 13W-185 to the floor pan assembly 13W-080.

3 Attach the angles 13W-110, 13W-120 with the screws 13W-160 to the floor pan assembly 13W-080.

4 Attach the angles 13W-140 with the screws 13W-190, the washers 13W-180 and the nuts 13W-200 to the floor pan assembly 13W-080.

(b) Attach the floor panel assembly 13W-080 with the screws 13W-210 to the lavatory structure.

(c) Attach the floor pan assembly 13W-010 with the screws 13W-040, 13W-060, 13W-260 and the washers 13W-050, 13W-070, 13W-270 to the floor panel assembly 13W-080, to the angles 13W-110, 13W-120 and to the lavatory structure.

TASK 25-41-51-400-814-A01

D2549010500000 D2549010500600 D2549010500800 D2549010501200 D2549010501400 D2549010501800 D2549010502200 D2549010502400 D2549010502600 D2549010503600 D2549010503800 D2549010504200 D2549010504400 D2549010504600 D2549010505200 D2549010505800 D2549020500400 D2549020500800 D2549020501800 D2549020502400 D2549020502600 D2549020504000 D2549020600000 D2549020600200 D2549030500400 D2549030500600 D2549030501000 D2549030501200 D2549030501400 R225401146-000 R225401146-002 R225401188-000 R225401188-002

128. Installation of the Toilet Unit and the Toilet Shroud

A. General

This task gives you the installation and assembly procedures of the component.

B. Job Set-up Information

(1) Not applicable

C. Procedure

WARNING: BE CAREFUL WHEN YOU USE SOLVENTS/CLEANING AGENTS, SEALANTS AND OTHER MATERIALS. OBEY THE MATERIAL MANUFACTURER'S INSTRUCTIONS AND THE LOCAL REGULATIONS. MAKE SURE THAT THERE IS A GOOD FLOW OF AIR THROUGH THE WORK AREA. DO NOT BREATHE THE FUMES. DO NOT SMOKE. DO NOT USE THESE MATERIALS NEAR A FLAME, SPARKS OR SOURCES OF HEAT. USE PROTECTIVE CLOTHING, GOGGLES AND GLOVES. IF YOU GET ONE OF THESE MATERIALS ON YOUR SKIN OR IN YOUR EYES, FLUSH IT AWAY WITH A FLOW OF CLEAN WATER. IF YOU GET ONE OF THESE MATERIALS IN YOUR MOUTH, GET IMMEDIATE MEDICAL AID. IN GENERAL, THESE MATERIALS ARE POISONOUS, FLAMMABLE AND SKIN IRRITANTS.

CAUTION: DO ALL THE WORK ON A CLEAN, SOFT SURFACE TO PREVENT DAMAGE TO THE COMPONENTS.

CAUTION: MAKE SURE THAT ALL THE PARTS ARE CLEAN BEFORE YOU ASSEMBLE THEM.

SUB TASK 25-41-51-410-001-A01

D2549010500600 D2549010501400 D2549010501800 D2549010502200 D2549010502400 D2549010503600 D2549010504200 D2549010504400 D2549010504600 D2549010505200 D2549010505800 D2549020500400 D2549020500800 D2549020501800 D2549020502400 D2549020502600 D2549020504000 D2549020600000 D2549020600200 D2549030500400

D2549030501000 D2549030501200 D2549030501400 R225401146-000 R225401146-002 R225401188-000 R225401188-002

1. Installation of the Toilet Unit and the Toilet Shroud (12-1)

   (a) Attach the toilet assembly 12-110 with the bolts 12-120, the lock washers 12-130 and the washers 12-140 to the lavatory structure. Use a torque value of 10 N.m (7.376 lbf.ft).

   NOTE: For further instructions, see CMMV 38-34-16_29780 (toilet assembly).

   (b) Attach the ground cable in accordance with the Process and Material Specification PMS 01-04-58 to the toilet assembly 12-110.

   (c) Attach the support bracket 12-070 with the screws 12-090 and the washers 12-100 to the lavatory structure.

   (d) Attach the support bracket 12-080 with the screws 12-090 and the washers 12-100 to the lavatory structure.

   (e) Assemble the toilet seat assembly 12-060 as follows:

      1 Attach the unpainted toilet cover 12-064 with the unpainted fasteners 12-063 to the unpainted toilet seat assembly 12-066.

   (f) Attach the toilet seat assembly 12-060 with the gaskets 12-062 and the nuts 12-061 to the toilet shroud assembly 12-010.

   (g) Attach the toilet shroud assembly 12-010 with the screws 12-040 and the nuts 12-050 to the lavatory structure.

SUB TASK 25-41-51-410-001-B01
D2549010500000 D2549010500800 D2549010501200 D2549010502600 D2549010503800 D2549030500600

2. Installation of the Toilet Unit and the Toilet Shroud (12-1)

   (a) Attach the toilet assembly 12-110 with the bolts 12-120, the lock washers 12-130 and the washers 12-140 to the lavatory structure. Use a torque value of 10 N.m (7.376 lbf.ft).

   NOTE: For further instructions, see CMMV 38-34-16_29780 (toilet assembly).

   (b) Attach the ground cable in accordance with the Process and Material Specification PMS 01-04-58 to the toilet assembly 12-110.

(c) Attach the support bracket 12-070 with the screws 12-091 and the washers 12-100 to the lavatory structure.

(d) Attach the support bracket 12-080 with the screws 12-150 and the washers 12-100 to the lavatory structure.

(e) Assemble the toilet seat assembly 12-060 as follows:

1 Attach the unpainted toilet cover 12-064 with the unpainted fasteners 12-063 to the unpainted toilet seat assembly 12-066.

(f) Attach the toilet seat assembly 12-060 with the gaskets 12-062 and the nuts 12-061 to the toilet shroud assembly 12-010.

(g) Attach the toilet shroud assembly 12-010 with the screws 12-040 and the nuts 12-050 to the lavatory structure.

TASK 25-41-51-400-814-B01

D2549010502000 D2549010504800 D2549010505000 D2549010505400 D2549010505600 D2549010506000 D2549010506200 D2549010506400 D2549010506800 D2549010507000 D2549010507200 D2549010507400 D2549010507600 D2549010507800 D2549010508000 D2549010508200 D2549010508400 D2549010508600 D2549010508800 D2549010509200 D2549010511200 D2549020500000 D2549020500600 D2549020501000 D2549020501400 D2549020502800 D2549020503200 D2549020503800 D2549020504200 D2549020504400 D2549020504600 D2549020504800 D2549020505000 D2549020505200 D2549020505400 D2549020505800 D2549020506000 D2549020600400 D2549020600800 D2549020601000 D2549020601200 D2549020601400 D2549020601600 D2549020601800 D2549020602000 D2549020602400 D2549020602800 D2549020603000 D2549020603200 D2549020603400 D2549020603600 D2549020604000 D2549020606400 D2549020606600 D2549030500800 D2549030501600 D2549030501800 D2549030502000 D2549030502200 D2549030502400 D2549030502600 D2549030502800 D2549030503000 D2549030503200 D2549030503400 D2549030503600 R225401107-002 R225401115-002 R225401128-000 R225401133-000 R225401134-000 R225401139-000 R225401145-000 R225401188-004 R225401188-006

129. Installation of the Toilet Unit and the Toilet Shroud

A. General

This task gives you the installation and assembly procedures of the component.

B. Job Set-up Information

(1) Not applicable

C. Procedure

WARNING: BE CAREFUL WHEN YOU USE SOLVENTS/CLEANING AGENTS, SEALANTS AND OTHER MATERIALS. OBEY THE MATERIAL MANUFACTURER'S INSTRUCTIONS AND THE LOCAL REGULATIONS. MAKE SURE THAT THERE IS A GOOD FLOW OF AIR THROUGH THE WORK AREA. DO NOT BREATHE THE FUMES. DO NOT SMOKE. DO NOT USE THESE MATERIALS NEAR A FLAME, SPARKS OR SOURCES OF HEAT. USE PROTECTIVE CLOTHING, GOGGLES AND GLOVES. IF YOU GET ONE OF THESE MATERIALS ON YOUR SKIN OR IN YOUR EYES, FLUSH IT AWAY WITH A FLOW OF CLEAN WATER. IF YOU GET ONE OF THESE MATERIALS IN YOUR MOUTH, GET IMMEDIATE MEDICAL AID. IN GENERAL, THESE MATERIALS ARE POISONOUS, FLAMMABLE AND SKIN IRRITANTS.

CAUTION: DO ALL THE WORK ON A CLEAN, SOFT SURFACE TO PREVENT DAMAGE TO THE COMPONENTS.

CAUTION: MAKE SURE THAT ALL THE PARTS ARE CLEAN BEFORE YOU ASSEMBLE THEM.

SUB TASK 25-41-51-410-002-A01

D2549010502000 D2549010504800 D2549010505000 D2549010505400 D2549010505600 D2549010506200 D2549010506400 D2549010506800 D2549010507000 D2549010507200 D2549010507400 D2549010507800 D2549010508000 D2549010508200 D2549010508400 D2549010508600 D2549010508800 D2549010509200 D2549010511200 D2549020500000 D2549020500600 D2549020501000 D2549020501400 D2549020502800 D2549020503200 D2549020503800 D2549020504200 D2549020504400 D2549020504600 D2549020505000 D2549020505200 D2549020505400 D2549020505800 D2549020506000 D2549020600400 D2549020600800 D2549020601000 D2549020601200 D2549020601400 D2549020601600 D2549020601800 D2549020602000 D2549020602400 D2549020602800 D2549020603000 D2549020603200 D2549020603400 D2549020603600 D2549020604000 D2549020606400 D2549020606600 D2549030500800 D2549030501600 D2549030501800 D2549030502000 D2549030502200 D2549030502400 D2549030502600 D2549030502800 D2549030503200 D2549030503400 D2549030503600 R225401107-002 R225401115-002 R225401128-000 R225401133-000 R225401134-000 R225401139-000 R225401145-000 R225401188-004 R225401188-006

1. Installation of the Toilet Unit and the Toilet Shroud (12A-1)

   (a) Attach the toilet assembly 12A-190 with the bolts 12A-200, the lock washers 12A-210 and the washers 12A-220 to the lavatory structure. Use a torque value of 10 N.m (7.376 lbf.ft).

   NOTE: For further instructions, see CMMV 38-34-16_29780 (toilet assembly).

   (b) Attach the ground cable in accordance with the Process and Material Specification PMS 01-04-58 to the toilet assembly 12A-190.

   (c) Attach the support bracket 12A-160 with the screws 12A-170 and the washers 12A-180 to the lavatory structure.

   (d) Attach the support bracket 12A-150 with the screws 12A-170 and the washers 12A-180 to the lavatory structure.

   (e) Assemble the toilet seat assembly 12A-060 as follows:

      1 Attach the unpainted toilet cover 12A-100 with the unpainted fasteners 12A-090 to the unpainted toilet seat assembly 12A-120.

   (f) Attach the toilet seat assembly 12A-060 with the gaskets 12A-080 and the nuts 12A-070 to the toilet shroud assembly 12A-010.

(g) Attach the toilet shroud assembly 12A-010 with the screws 12A-040 and the nuts 12A-050 to the lavatory structure.

SUB TASK 25-41-51-410-002-B01
D2549010506000 D2549010507600 D2549020504800 D2549030503000

2. Installation of the Toilet Unit and the Toilet Shroud (12A-1)

(a) Attach the toilet assembly 12A-190 with the bolts 12A-200, the lock washers 12A-210 and the washers 12A-220 to the lavatory structure. Use a torque value of 10 N.m (7.376 lbf.ft).

NOTE: For further instructions, see CMMV 38-34-16_29780 (toilet assembly).

(b) Attach the ground cable in accordance with the Process and Material Specification PMS 01-04-58 to the toilet assembly 12A-190.

(c) Attach the support bracket 12A-160 with the screws 12A-230 and the washers 12A-180 to the lavatory structure.

(d) Attach the support bracket 12A-150 with the screws 12A-171 and the washers 12A-180 to the lavatory structure.

(e) Assemble the toilet seat assembly 12A-060 as follows:

1 Attach the unpainted toilet cover 12A-100 with the unpainted fasteners 12A-090 to the unpainted toilet seat assembly 12A-120.

(f) Attach the toilet seat assembly 12A-060 with the gaskets 12A-080 and the nuts 12A-070 to the toilet shroud assembly 12A-010.

(g) Attach the toilet shroud assembly 12A-010 with the screws 12A-040 and the nuts 12A-050 to the lavatory structure.

TASK 25-41-51-400-814-C01
D2549010500400 D2549010501000 D2549010501600 D2549010502800 D2549010503200 D2549010503400 D2549020500200 D2549020501200 D2549020501600 D2549020502000 D2549020503000 D2549020503400 D2549020503600 D2549020602600 D2549020603800 D2549020607200 D2549030500200 R225401107-000

130. Installation of the Toilet Unit and the Toilet Shroud

A. General

This task gives you the installation and assembly procedures of the component.

B. Job Set-up Information

(1) Not applicable

C. Procedure

WARNING: BE CAREFUL WHEN YOU USE SOLVENTS/CLEANING AGENTS, SEALANTS AND OTHER MATERIALS. OBEY THE MATERIAL MANUFACTURER'S INSTRUCTIONS AND THE LOCAL REGULATIONS. MAKE SURE THAT THERE IS A GOOD FLOW OF AIR THROUGH THE WORK AREA. DO NOT BREATHE THE FUMES. DO NOT SMOKE. DO NOT USE THESE MATERIALS NEAR A FLAME, SPARKS OR SOURCES OF HEAT. USE PROTECTIVE CLOTHING, GOGGLES AND GLOVES. IF YOU GET ONE OF THESE MATERIALS ON YOUR SKIN OR IN YOUR EYES, FLUSH IT AWAY WITH A FLOW OF CLEAN WATER. IF YOU GET ONE OF THESE MATERIALS IN YOUR MOUTH, GET IMMEDIATE MEDICAL AID. IN GENERAL, THESE MATERIALS ARE POISONOUS, FLAMMABLE AND SKIN IRRITANTS.

CAUTION: DO ALL THE WORK ON A CLEAN, SOFT SURFACE TO PREVENT DAMAGE TO THE COMPONENTS.

CAUTION: MAKE SURE THAT ALL THE PARTS ARE CLEAN BEFORE YOU ASSEMBLE THEM.

SUB TASK 25-41-51-410-003-A01

1. Installation of the Toilet Unit and the Toilet Shroud (12B-1)

(a) Attach the toilet assembly 12B-190 with the bolts 12B-200, the lock washers 12B-210 and the washers 12B-220 to the lavatory structure. Use a torque value of 10 N.m (7.376 lbf.ft).

NOTE: For further instructions, see CMMV 38-34-16_29780 (toilet assembly).

(b) Attach the ground cable in accordance with the Process and Material Specification PMS 01-04-58 to the toilet assembly 12B-190.

(c) Attach the support bracket 12B-150 with the screws 12B-170 and the washers 12B-180 to the lavatory structure.

(d) Attach the support bracket 12B-160 with the screws 12B-170 and the washers 12B-180 to the lavatory structure.

(e) Assemble the toilet seat assembly 12B-060 as follows:

1 Attach the unpainted toilet cover 12B-100 with the unpainted fasteners 12B-090 to the unpainted toilet seat assembly 12B-120.

(f) Attach the toilet seat assembly 12B-060 with the gaskets 12B-080 and the nuts 12B-070 to the toilet shroud assembly 12B-010.

(g) Attach the toilet shroud assembly 12B-010 with the screws 12B-040 and the nuts 12B-050 to the lavatory structure.

TASK 25-41-51-400-814-D01

D2549010509400 D2549010509600 D2549010509800 D2549010510000 D2549010510200
D2549010510400 D2549010510600 D2549010510800 D2549010511000 D2549010511400
D2549010511600 D2549010511800 D2549010512000 D2549010512200 D2549010512400
D2549010512600 D2549010513000 D2549010513400 D2549010513600 D2549010513800
D2549010514000 D2549010514200 D2549010514400 D2549010514600 D2549010514800
D2549010600000 D2549010600200 D2549010600400 D2549010600600 D2549010600800
D2549010601200 D2549010601400 D2549010601600 D2549010601800 D2549010602400
D2549010602600 D2549010602800 D2549010603000 D2549010603200 D2549010603400
D2549010603800 D2549010604000 D2549010604200 D2549010604400 D2549010604800
D2549010605000 D2549010605200 D2549010605800 D2549010606000 D2549010606200
D2549010606400 D2549010606600 D2549010606800 D2549010608200 D2549010608400
D2549020502200 D2549020506200 D2549020506400 D2549020506800 D2549020507000
D2549020507200 D2549020507600 D2549020507800 D2549020508000 D2549020508200
D2549020508400 D2549020508600 D2549020508800 D2549020509000 D2549020509200
D2549020509600 D2549020509800 D2549020510000 D2549020514200 D2549020514400
D2549020602200 D2549020604200 D2549020604400 D2549020604800 D2549020605000
D2549020605200 D2549020605600 D2549020605800 D2549020606000 D2549020606800
D2549020607000 D2549020607400 D2549020607600 D2549020607800 D2549020608200
D2549020608400 D2549020608600 D2549020608800 D2549020609000 D2549020609200
D2549020609400 D2549020609600 D2549020609800 D2549020610000 D2549020610200
D2549020610400 D2549020610600 D2549020611000 D2549020611200 D2549020611400
D2549020611600 D2549020611800 D2549020612000 D2549020612200 D2549020612400
D2549020612600 D2549020612800 D2549020613000 D2549020613200 D2549020613600
D2549020613800 D2549020614000 D2549020614400 D2549020614600 D2549020614800
D2549020700000 D2549020700200 D2549020700400 D2549020700600 D2549020700800
D2549020701000 D2549020701200 D2549020701400 D2549020701600 D2549020701800
D2549020702000 D2549020702400 D2549020702600 D2549020702800 D2549020703200
D2549020703400 D2549020703600 D2549020703800 D2549020704000 D2549020704200
D2549020704400 D2549020704600 D2549020704800 D2549020705200 D2549020705400
D2549020705600 D2549020706000 D2549020706200 D2549020706400 D2549020706600
D2549020706800 D2549020707000 D2549020707200 D2549020707400 D2549020707600
D2549020707800 D2549020708000 D2549020708200 D2549020708400 D2549020708600
D2549020708800 D2549020709000 D2549020709200 D2549020709400 D2549020709600
D2549020709800 D2549020710200 D2549020710400 D2549020710600 D2549020710800
D2549020711000 D2549020711200 D2549020711400 D2549020712200 D2549020713200
D2549020713400 D2549020713600 D2549020713800 D2549020714400 D2549020714600
D2549030503800 D2549030504000 D2549030504200 D2549030504600 D2549030504800
D2549030505200 D2549030505400 D2549030505600 D2549030505800 D2549030506000
D2549030506200 D2549030506400 D2549030506600 D2549030506800 D2549030507000
D2549030507600 D2549030507800 D2549030508000 D2549030508200 D2549030508400
D2549030508800 D2549030509000 D2549030509200 D2549030509400 D2549030509600
D2549030509800 D2549030510000 D2549030510400 D2549030510600 D2549030510800
D2549030511000 D2549030511200 D2549030511400 D2549030511800 D2549030512000
D2549030512400 D2549030512800 D2549030513000 D2549030513200 D2549030513400
D2549030513600 D2549030513800 D2549030514000 D2549030514200 D2549030514400
D2549030514600 D2549030514800 D2549030600200 D2549030600400 D2549030600600

D2549030601000 D2549030601200 D2549030601400 D2549030601800 D2549030602000 D2549030602200 D2549030602600 D2549030602800 D2549030603000 D2549030603400 D2549030603800 D2549030604200 D2549030604400 D2549030604800 D2549030605000 D2549030605200 D2549030605400 D2549030605600 D2549030605800 D2549030606000 D2549030606200 D2549030606600 D2549030606800 D2549030607000 D2549030607200 D2549030607400 D2549030607600 D2549030608200 D2549030608400 D2549030608600 D2549030608800 D2549030609200 D2549030614200 R225401107-004 R225401134-002 R225401134-004 R225401134-006 R225401134-008 R225401134-016 R225401134-018 R225401134-020 R225401134-022 R225401134-024 R225401136-000 R225401136-010 R225401136-016 R225401136-020 R225401136-022 R225401137-000 R225401137-002 R225401137-004 R225401137-006 R225401137-008 R225401137-010 R225401137-012 R225401137-014 R225401142-000 R225401142-002 R225401145-002 R225401145-004 R225401145-012 R225401152-000 R225401152-002 R225401152-004 R225401152-006 R225401153-000 R225401159-000 R225401160-000 R225401160-002 R225401172-002 R225401172-004 R225401172-006 R225401172-008 R225401172-010 R225401172-012 R225401172-014 R225401175-000 R225401175-002 R225401176-000 R225401183-008 R225401192-000 R225401196-000 R225401196-002 R225401196-034 R225401196-046 R225401196-048 R225401199-002 R225401600-000 R225401600-002 R225401603-000 R225401605-000 R225401611-008 R225401613-000 R225401618-000 R225401618-002 R225401619-000

131. Installation of the Toilet Unit and the Toilet Shroud

A. General

This task gives you the installation and assembly procedures of the component.

B. Job Set-up Information

(1) Not applicable

C. Procedure

WARNING: **BE CAREFUL WHEN YOU USE SOLVENTS/CLEANING AGENTS, SEALANTS AND OTHER MATERIALS. OBEY THE MATERIAL MANUFACTURER'S INSTRUCTIONS AND THE LOCAL REGULATIONS. MAKE SURE THAT THERE IS A GOOD FLOW OF AIR THROUGH THE WORK AREA. DO NOT BREATHE THE FUMES. DO NOT SMOKE. DO NOT USE THESE MATERIALS NEAR A FLAME, SPARKS OR SOURCES OF HEAT. USE PROTECTIVE CLOTHING, GOGGLES AND GLOVES. IF YOU GET ONE OF THESE MATERIALS ON YOUR SKIN OR IN YOUR EYES, FLUSH IT AWAY WITH A FLOW OF CLEAN WATER. IF YOU GET ONE OF THESE MATERIALS IN YOUR MOUTH, GET IMMEDIATE MEDICAL AID. IN GENERAL, THESE MATERIALS ARE POISONOUS, FLAMMABLE AND SKIN IRRITANTS.**

CAUTION: **DO ALL THE WORK ON A CLEAN, SOFT SURFACE TO PREVENT DAMAGE TO THE COMPONENTS.**

CAUTION: **MAKE SURE THAT ALL THE PARTS ARE CLEAN BEFORE YOU ASSEMBLE THEM.**

SUB TASK 25-41-51-410-004-A01

D2549010509400 D2549010509600 D2549010509800 D2549010510000
D2549010510200 D2549010510400 D2549010510600 D2549010510800
D2549010511000 D2549010511400 D2549010511600 D2549010511800
D2549010512000 D2549010512200 D2549010512400 D2549010512600
D2549010513000 D2549010513400 D2549010513600 D2549010513800
D2549010514000 D2549010514200 D2549010514400 D2549010514600
D2549010514800 D2549010600000 D2549010600200 D2549010600400
D2549010600600 D2549010600800 D2549010601200 D2549010601400
D2549010601600 D2549010601800 D2549010602400 D2549010602600
D2549010602800 D2549010603000 D2549010603200 D2549010603400
D2549010603800 D2549010604000 D2549010604200 D2549010604400
D2549010604800 D2549010605000 D2549010605200 D2549010605800
D2549010606000 D2549010606200 D2549010606400 D2549010606600
D2549010606800 D2549010608200 D2549010608400 D2549020502200
D2549020506200 D2549020506400 D2549020506800 D2549020507000
D2549020507200 D2549020507600 D2549020507800 D2549020508000
D2549020508200 D2549020508400 D2549020508600 D2549020508800
D2549020509000 D2549020509200 D2549020509600 D2549020509800
D2549020510000 D2549020514200 D2549020514400 D2549020602200
D2549020604200 D2549020604800 D2549020605000 D2549020605200
D2549020605600 D2549020605800 D2549020606000 D2549020606800
D2549020607000 D2549020607400 D2549020607600 D2549020607800
D2549020608200 D2549020608400 D2549020608800 D2549020609000
D2549020609200 D2549020609400 D2549020609600 D2549020609800
D2549020610000 D2549020610200 D2549020610400 D2549020610600
D2549020611000 D2549020611200 D2549020611400 D2549020611600
D2549020611800 D2549020612000 D2549020612200 D2549020612400
D2549020612600 D2549020612800 D2549020613000 D2549020613200
D2549020613600 D2549020613800 D2549020614000 D2549020614400
D2549020614800 D2549020700000 D2549020700200 D2549020700400
D2549020700600 D2549020700800 D2549020701000 D2549020701200
D2549020701400 D2549020701600 D2549020701800 D2549020702000
D2549020702400 D2549020702600 D2549020702800 D2549020703200
D2549020703400 D2549020703600 D2549020703800 D2549020704000
D2549020704200 D2549020704400 D2549020704600 D2549020704800
D2549020705200 D2549020705400 D2549020705600 D2549020706000
D2549020706200 D2549020706400 D2549020706600 D2549020706800
D2549020707200 D2549020707400 D2549020707600 D2549020707800
D2549020708000 D2549020708200 D2549020708400 D2549020708600
D2549020708800 D2549020709000 D2549020709200 D2549020709400

D2549020709600 D2549020709800 D2549020710200 D2549020710400 D2549020710600 D2549020710800 D2549020711000 D2549020711200 D2549020711400 D2549020712200 D2549020713200 D2549020713400 D2549020713600 D2549020713800 D2549020714400 D2549020714600 D2549030503800 D2549030504000 D2549030504200 D2549030504600 D2549030504800 D2549030505200 D2549030505400 D2549030505600 D2549030505800 D2549030506000 D2549030506200 D2549030506400 D2549030506600 D2549030506800 D2549030507000 D2549030507600 D2549030507800 D2549030508000 D2549030508200 D2549030508400 D2549030508800 D2549030509000 D2549030509200 D2549030509400 D2549030509600 D2549030509800 D2549030510000 D2549030510400 D2549030510600 D2549030510800 D2549030511000 D2549030511200 D2549030511400 D2549030511800 D2549030512000 D2549030512400 D2549030512800 D2549030513000 D2549030513200 D2549030513400 D2549030513600 D2549030513800 D2549030514000 D2549030514200 D2549030514400 D2549030514600 D2549030514800 D2549030600200 D2549030600400 D2549030600600 D2549030601000 D2549030601200 D2549030601400 D2549030601800 D2549030602000 D2549030602200 D2549030602600 D2549030602800 D2549030603000 D2549030603400 D2549030603800 D2549030604200 D2549030604400 D2549030604800 D2549030605000 D2549030605200 D2549030605400 D2549030605600 D2549030605800 D2549030606000 D2549030606200 D2549030606600 D2549030606800 D2549030607000 D2549030607200 D2549030607400 D2549030607600 D2549030608200 D2549030608400 D2549030608600 D2549030608800 D2549030609200 D2549030614200 R225401107-004 R225401134-002 R225401134-004 R225401134-006 R225401134-008 R225401134-016 R225401134-018 R225401134-020 R225401134-022 R225401134-024 R225401136-000 R225401136-010 R225401136-016 R225401136-020 R225401136-022 R225401137-000 R225401137-002 R225401137-004 R225401137-006 R225401137-008 R225401137-010 R225401137-012 R225401137-014 R225401142-000 R225401142-002 R225401145-002 R225401145-004 R225401145-012 R225401152-000 R225401152-002 R225401152-004 R225401152-006 R225401153-000 R225401159-000 R225401160-000 R225401160-002 R225401172-002 R225401172-004 R225401172-006 R225401172-008 R225401172-010 R225401172-012 R225401172-014 R225401175-000 R225401175-002 R225401176-000 R225401183-008 R225401192-000 R225401196-000 R225401196-002 R225401196-034 R225401196-046 R225401196-048 R225401199-002 R225401600-000 R225401600-002 R225401603-000 R225401605-000 R225401611-008 R225401613-000 R225401618-000 R225401618-002 R225401619-000

1. Installation of the Toilet Unit and the Toilet Shroud (12C-1)

   (a) Attach the toilet assembly 12C-230 with the bolts 12C-200, the lock washers 12C-210 and the washers 12C-220 to the lavatory structure. Use a torque value of 10 N.m (7.376 lbf.ft).

   NOTE: For further instructions, see CMMV 38-34-20_29780 (toilet assembly).

(b) Attach the ground cable in accordance with the Process and Material Specification PMS 01-04-58 to the toilet assembly 12C-230.

(c) Attach the support bracket 12C-160 with the screws 12C-175, the washers 12C-180 and the nuts 12C-190 to the lavatory structure.

(d) Attach the support bracket 12C-150 with the screws 12C-170 and the washers 12C-180 to the lavatory structure.

(e) Assemble the toilet seat assembly 12C-060 as follows:

1 Attach the unpainted toilet cover 12C-100 with the unpainted fasteners 12C-090 to the unpainted toilet seat 12C-120.

(f) Attach the toilet seat assembly 12C-060 with the gaskets 12C-080 and the nuts 12C-070 to the toilet shroud assembly 12C-010.

(g) Attach the toilet shroud assembly 12C-010 with the screws 12C-040 and the nuts 12C-050 to the lavatory structure.

SUB TASK 25-41-51-410-004-B01
D2549020604400 D2549020608600 D2549020614600 D2549020707000

2. Installation of the Toilet Unit and the Toilet Shroud (12C-1)

(a) Attach the toilet assembly 12C-230 with the bolts 12C-200, the lock washers 12C-210 and the washers 12C-220 to the lavatory structure. Use a torque value of 10 N.m (7.376 lbf.ft).

NOTE: For further instructions, see CMMV 38-34-16_29780 (toilet assembly).

NOTE: For further instructions, see CMMV 38-34-20_29780 (toilet assembly).

(b) Attach the ground cable in accordance with the Process and Material Specification PMS 01-04-58 to the toilet assembly 12C-230.

(c) Attach the support bracket 12C-160 with the screws 12C-175, the washers 12C-180 and the nuts 12C-190 to the lavatory structure.

(d) Attach the support bracket 12C-150 with the screws 12C-170 and the washers 12C-180 to the lavatory structure.

(e) Assemble the toilet seat assembly 12C-060 as follows:

1 Attach the unpainted toilet cover 12C-100 with the unpainted fasteners 12C-090 to the unpainted toilet seat 12C-120.

(f) Attach the toilet seat assembly 12C-060 with the gaskets 12C-080 and the nuts 12C-070 to the toilet shroud assembly 12C-010.

(g) Attach the toilet shroud assembly 12C-010 with the screws 12C-040 and the nuts 12C-050 to the lavatory structure.

TASK 25-41-51-400-814-E01

D2549010400000 D2549010400200 D2549010400400 D2549010400600 D2549010402600
D2549010403000 D2549010509000 D2549010513200 D2549010601000 D2549010602000
D2549010602200 D2549010604600 D2549010605600 D2549010607000 D2549010607200
D2549010608600 D2549010608800 D2549010609200 D2549010609600 D2549010610000
D2549010610200 D2549010610800 D2549010611000 D2549010611400 D2549010612200
D2549010612400 D2549010612600 D2549010613000 D2549010613200 D2549010613400
D2549010614200 D2549010614400 D2549010614600 D2549010614800 D2549020400000
D2549020400200 D2549020404200 D2549020404400 D2549020405600 D2549020405800
D2549020505600 D2549020506600 D2549020507400 D2549020510400 D2549020511200
D2549020512000 D2549020512200 D2549020513000 D2549020513200 D2549020513400
D2549020513800 D2549020514000 D2549020604600 D2549020605400 D2549020610800
D2549020702200 D2549020705000 D2549020705800 D2549020710000 D2549020712400
D2549020712800 D2549020713000 D2549020714000 D2549020800000 D2549020800600
D2549020800800 D2549020801200 D2549020801400 D2549020801600 D2549020801800
D2549020802200 D2549020802800 D2549020803600 D2549020803800 D2549020804000
D2549020804200 D2549020804800 D2549020805400 D2549020805800 D2549020806000
D2549020806200 D2549020806800 D2549020807000 D2549020808600 D2549020808800
D2549020810000 D2549020810200 D2549020810600 D2549020810800 D2549020811200
D2549020811400 D2549020811600 D2549020812200 D2549020812400 D2549020812600
D2549020812800 D2549020813000 D2549020813400 D2549020814000 D2549020814400
D2549020814800 D2549030400000 D2549030400200 D2549030400400 D2549030400600
D2549030401000 D2549030401200 D2549030401400 D2549030401600 D2549030401800
D2549030402600 D2549030402800 D2549030403000 D2549030403800 D2549030404000
D2549030404200 D2549030405000 D2549030405600 D2549030405800 D2549030406000
D2549030406600 D2549030406800 D2549030407000 D2549030407800 D2549030408000
D2549030408400 D2549030409800 D2549030410400 D2549030507200 D2549030507400
D2549030508600 D2549030510200 D2549030511600 D2549030512200 D2549030600000
D2549030600800 D2549030601600 D2549030602400 D2549030603200 D2549030604600
D2549030606400 D2549030607800 D2549030608000 D2549030609000 D2549030609800
D2549030610000 D2549030610200 D2549030610400 D2549030611000 D2549030611400
D2549030611600 D2549030612000 D2549030612400 D2549030613600 D2549030613800
D2549030614000 D2549030614400 D2549030614800 D2549040500600 R225401115-000
R225401136-004 R225401136-018 R225401137-016 R225401145-006 R225401145-008
R225401145-010 R225401145-014 R225401152-008 R225401168-000 R225401168-004
R225401168-006 R225401168-014 R225401168-016 R225401168-020 R225401168-028
R225401172-000 R225401172-016 R225401172-018 R225401195-000 R225401196-004
R225401196-006 R225401196-008 R225401196-010 R225401196-036 R225401196-038
R225401196-040 R225401196-044 R225401196-050 R225401196-052 R225401196-054
R225401196-056 R225401199-000 R225401199-004 R225401199-008 R225401600-004
R225401609-000 R225401611-006 R225401611-010 R225401614-000 R225401622-000
R225401622-002 R225401625-000 R225401646-000 R225401647-000 R225401656-000
R225401656-002 R225401658-000 R225401662-000 R225401662-002 R225401673-000

132. Installation of the Toilet Unit and the Toilet Shroud

A. General

This task gives you the installation and assembly procedures of the component.

B. Job Set-up Information

(1) Not applicable

C. Procedure

WARNING: **BE CAREFUL WHEN YOU USE SOLVENTS/CLEANING AGENTS, SEALANTS AND OTHER MATERIALS. OBEY THE MATERIAL MANUFACTURER'S INSTRUCTIONS AND THE LOCAL REGULATIONS. MAKE SURE THAT THERE IS A GOOD FLOW OF AIR THROUGH THE WORK AREA. DO NOT BREATHE THE FUMES. DO NOT SMOKE. DO NOT USE THESE MATERIALS NEAR A FLAME, SPARKS OR SOURCES OF HEAT. USE PROTECTIVE CLOTHING, GOGGLES AND GLOVES. IF YOU GET ONE OF THESE MATERIALS ON YOUR SKIN OR IN YOUR EYES, FLUSH IT AWAY WITH A FLOW OF CLEAN WATER. IF YOU GET ONE OF THESE MATERIALS IN YOUR MOUTH, GET IMMEDIATE MEDICAL AID. IN GENERAL, THESE MATERIALS ARE POISONOUS, FLAMMABLE AND SKIN IRRITANTS.**

CAUTION: **DO ALL THE WORK ON A CLEAN, SOFT SURFACE TO PREVENT DAMAGE TO THE COMPONENTS.**

CAUTION: **MAKE SURE THAT ALL THE PARTS ARE CLEAN BEFORE YOU ASSEMBLE THEM.**

SUB TASK 25-41-51-410-069-A01

D2549010400000 D2549010400400 D2549010402600 D2549010403000
D2549010602000 D2549010602200 D2549010604600 D2549010605600
D2549010607000 D2549010607200 D2549010608600 D2549010608800
D2549010609200 D2549010609600 D2549010610000 D2549010610200
D2549010610800 D2549010611000 D2549010611400 D2549010612200
D2549010612400 D2549010613000 D2549010613200 D2549010614200
D2549010614400 D2549010614600 D2549010614800 D2549020400000
D2549020400200 D2549020404200 D2549020404400 D2549020405600
D2549020405800 D2549020505600 D2549020507400 D2549020510400
D2549020511200 D2549020512000 D2549020512200 D2549020513000
D2549020513200 D2549020513400 D2549020513800 D2549020514000
D2549020604600 D2549020605400 D2549020610800 D2549020702200
D2549020705000 D2549020705800 D2549020710000 D2549020712400
D2549020712800 D2549020713000 D2549020714000 D2549020800000
D2549020800600 D2549020800800 D2549020801200 D2549020801400
D2549020801600 D2549020801800 D2549020802200 D2549020802800
D2549020803600 D2549020803800 D2549020804000 D2549020804200
D2549020804800 D2549020805400 D2549020805800 D2549020806000
D2549020806200 D2549020806800 D2549020807000 D2549020808600
D2549020808800 D2549020810000 D2549020810200 D2549020810600

D2549020810800 D2549020811200 D2549020811400 D2549020812200
D2549020812400 D2549020812600 D2549020812800 D2549020813000
D2549020813400 D2549020814000 D2549020814400 D2549020814800
D2549030400000 D2549030400200 D2549030400400 D2549030400600
D2549030401000 D2549030401200 D2549030401400 D2549030401600
D2549030401800 D2549030402600 D2549030402800 D2549030403000
D2549030403800 D2549030404000 D2549030404200 D2549030405000
D2549030405600 D2549030405800 D2549030406000 D2549030406600
D2549030406800 D2549030407000 D2549030407800 D2549030408000
D2549030408400 D2549030409800 D2549030410400 D2549030507200
D2549030507400 D2549030508600 D2549030510200 D2549030511600
D2549030512200 D2549030600000 D2549030600800 D2549030601600
D2549030602400 D2549030603200 D2549030604600 D2549030606400
D2549030607800 D2549030608000 D2549030609000 D2549030609800
D2549030610000 D2549030610400 D2549030611000 D2549030611400
D2549030611600 D2549030612000 D2549030612400 D2549030613600
D2549030613800 D2549030614000 D2549030614400 D2549030614800
D2549040500600 R225401115-000 R225401136-004 R225401136-018 R225401137-016
R225401145-006 R225401145-008 R225401145-010 R225401145-014 R225401152-008
R225401168-000 R225401168-004 R225401168-006 R225401168-014 R225401168-016
R225401168-020 R225401168-028 R225401172-000 R225401172-016 R225401172-018
R225401195-000 R225401196-004 R225401196-006 R225401196-008 R225401196-010
R225401196-036 R225401196-038 R225401196-040 R225401196-044 R225401196-050
R225401196-052 R225401196-054 R225401196-056 R225401199-000 R225401199-004
R225401199-008 R225401600-004 R225401609-000 R225401611-006 R225401611-010
R225401614-000 R225401622-000 R225401622-002 R225401625-000 R225401646-
000 R225401647-000 R225401656-000 R225401656-002 R225401658-000
R225401662-000 R225401662-002 R225401673-000

1. Installation of the Toilet Unit and the Toilet Shroud (12D-1)

   (a) Attach the toilet assembly 12D-230 with the bolts 12D-200, the lock washers 12D-210 and the washers 12D-220 to the lavatory structure. Use a torque value of 10 N.m (7.376 lbf.ft).

   NOTE: For further instructions, see CMMV 38-34-20_29780 (toilet assembly).

   NOTE: For further instructions, see CMMV 38-34-30_29780 (toilet assembly).

   (b) Attach the ground cable in accordance with the Process and Material Specification PMS 01-04-58 to the toilet assembly 12D-230.

   (c) Attach the support bracket 12D-160 with the screws 12D-175, the washers 12D-180, 12D-185 and the nuts 12D-190 to the lavatory structure.

(d) Attach the support bracket 12D-150 with the screws 12D-170 and the washers 12D-180 to the lavatory structure.

(e) Assemble the toilet seat assembly 12D-060 as follows:

1 Attach the unpainted toilet cover 12D-100 with the unpainted fasteners 12D-090 to the unpainted toilet seat 12D-120.

(f) Attach the toilet seat assembly 12D-060 with the gaskets 12D-080 and the nuts 12D-070 to the toilet shroud assembly 12D-010.

(g) Attach the toilet shroud assembly 12D-010 with the screws 12D-040 and the nuts 12D-050 to the lavatory structure.

SUB TASK 25-41-51-410-069-B01
D2549010509000 D2549010513200 D2549010601000 D2549020506600

2. Installation of the Toilet Unit and the Toilet Shroud (12D-1)

(a) Attach the toilet assembly 12D-230 with the bolts 12D-200, the lock washers 12D-210 and the washers 12D-220 to the lavatory structure. Use a torque value of 10 N.m (7.376 lbf.ft).

NOTE: For further instructions, see CMMV 38-34-16_29780 (toilet assembly).

NOTE: For further instructions, see CMMV 38-34-20_29780 (toilet assembly).

(b) Attach the ground cable in accordance with the Process and Material Specification PMS 01-04-58 to the toilet assembly 12D-230.

(c) Attach the support bracket 12D-160 with the screws 12D-175, the washers 12D-180 and the nuts 12D-190 to the lavatory structure.

(d) Attach the support bracket 12D-150 with the screws 12D-170 and the washers 12D-180 to the lavatory structure.

(e) Assemble the toilet seat assembly 12D-060 as follows:

1 Attach the unpainted toilet cover 12D-100 with the unpainted fasteners 12D-090 to the unpainted toilet seat 12D-120.

(f) Attach the toilet seat assembly 12D-060 with the gaskets 12D-080 and the nuts 12D-070 to the toilet shroud assembly 12D-010.

(g) Attach the toilet shroud assembly 12D-010 with the screws 12D-040 and the nuts 12D-050 to the lavatory structure.

SUB TASK 25-41-51-410-069-C01
D2549010400200 D2549010400600 D2549010612600 D2549010613400 D2549020811600

3. Installation of the Toilet Unit and the Toilet Shroud (12D-1)

(a) Attach the toilet assembly 12D-230 with the bolts 12D-200, the lock washers 12D-210 and the washers 12D-220 to the lavatory structure. Use a torque value of 10 N.m (7.376 lbf.ft).

NOTE: For further instructions, see CMMV 38-34-20_29780 (toilet assembly).

(b) Attach the ground cable in accordance with the Process and Material Specification PMS 01-04-58 to the toilet assembly 12D-230.

(c) Attach the support bracket 12D-160 with the screws 12D-175, the washers 12D-180 and the nuts 12D-190 to the lavatory structure.

(d) Attach the support bracket 12D-150 with the screws 12D-170 and the washers 12D-180 to the lavatory structure.

(e) Assemble the toilet seat assembly 12D-060 as follows:

1 Attach the unpainted toilet cover 12D-100 with the unpainted fasteners 12D-090 to the unpainted toilet seat 12D-120.

(f) Attach the toilet seat assembly 12D-060 with the gaskets 12D-080 and the nuts 12D-070 to the toilet shroud assembly 12D-010.

(g) Attach the toilet shroud assembly 12D-010 with the screws 12D-040 and the nuts 12D-050 to the lavatory structure.

SUB TASK 25-41-51-410-069-D01
D2549030610200

4. Installation of the Toilet Unit and the Toilet Shroud (12D-1)

(a) Attach the toilet assembly 12D-230 with the bolts 12D-200, the lock washers 12D-210 and the washers 12D-220 to the lavatory structure. Use a torque value of 10 N.m (7.376 lbf.ft).

NOTE: For further instructions, see CMMV 38-34-20_29780 (toilet assembly).

NOTE: For further instructions, see CMMV 38-34-30_29780 (toilet assembly).

(b) Attach the ground cable in accordance with the Process and Material Specification PMS 01-04-58 to the toilet assembly 12D-230.

(c) Attach the support bracket 12D-160 with the screws 12D-175, the washers 12D-180 and the nuts 12D-190 to the lavatory structure.

(d) Attach the support bracket 12D-150 with the screws 12D-170 and the washers 12D-180 to the lavatory structure.

(e) Assemble the toilet seat assembly 12D-060 as follows:

1 Attach the unpainted toilet cover 12D-100 with the unpainted fasteners 12D-090 to the unpainted toilet seat 12D-120.

(f) Attach the toilet seat assembly 12D-060 with the gaskets 12D-080 and the nuts 12D-070 to the toilet shroud assembly 12D-010.

(g) Attach the toilet shroud assembly 12D-010 with the screws 12D-040 and the nuts 12D-050 to the lavatory structure.

TASK 25-41-51-400-814-F01

D2549010400800 D2549010402000 D2549010402800 D2549010603600 D2549010607400
D2549010607600 D2549010607800 D2549010609000 D2549010609400 D2549010609800
D2549010610400 D2549010611200 D2549010611600 D2549010611800 D2549010612000
D2549010613800 D2549020400400 D2549020403800 D2549020404600 D2549020404800
D2549020405000 D2549020405200 D2549020405400 D2549020510600 D2549020510800
D2549020511000 D2549020511600 D2549020511800 D2549020512400 D2549020512600
D2549020512800 D2549020513600 D2549020514600 D2549020514800 D2549020711600
D2549020800200 D2549020800400 D2549020801000 D2549020802000 D2549020802400
D2549020802600 D2549020803000 D2549020803200 D2549020803400 D2549020805000
D2549020805200 D2549020805600 D2549020806400 D2549020806600 D2549020807400
D2549020807600 D2549020807800 D2549020808200 D2549020808400 D2549020809000
D2549020809400 D2549020809800 D2549020810400 D2549020812000 D2549020813600
D2549020814200 D2549020814600 D2549030402000 D2549030402200 D2549030402400
D2549030403400 D2549030403600 D2549030404400 D2549030404600 D2549030405200
D2549030405400 D2549030407200 D2549030408200 D2549030408600 D2549030610600
D2549030611200 D2549030611800 D2549030612200 D2549030612600 D2549030612800
D2549030613200 D2549030613400 D2549030614600 R225401134-010 R225401134-012
R225401134-026 R225401134-028 R225401134-030 R225401134-032 R225401134-034
R225401134-036 R225401168-002 R225401168-008 R225401168-010 R225401168-012
R225401168-022 R225401168-024 R225401168-026 R225401183-000 R225401183-002
R225401192-002 R225401199-006 R225401605-002 R225401619-002 R225401629-000
R225401629-002 R225401639-000 R225401639-002 R225401643-000 R225401643-002
R225401643-004 R225401693-000

133. Installation of the Toilet Unit and the Toilet Shroud

A. General

This task gives you the installation and assembly procedures of the component.

B. Job Set-up Information

(1) Not applicable

C. Procedure

WARNING: **BE CAREFUL WHEN YOU USE SOLVENTS/CLEANING AGENTS, SEALANTS AND OTHER MATERIALS. OBEY THE MATERIAL MANUFACTURER'S INSTRUCTIONS AND THE LOCAL REGULATIONS. MAKE SURE THAT THERE IS A GOOD FLOW OF AIR THROUGH THE WORK AREA. DO NOT BREATHE THE FUMES. DO NOT SMOKE. DO NOT USE THESE MATERIALS NEAR A FLAME, SPARKS OR SOURCES OF HEAT. USE PROTECTIVE CLOTHING, GOGGLES AND GLOVES. IF YOU GET ONE OF THESE MATERIALS ON YOUR SKIN OR IN YOUR EYES, FLUSH IT AWAY WITH A FLOW OF CLEAN WATER. IF YOU GET ONE OF THESE MATERIALS IN YOUR MOUTH, GET IMMEDIATE MEDICAL AID. IN GENERAL, THESE MATERIALS ARE POISONOUS, FLAMMABLE AND SKIN IRRITANTS.**

CAUTION: **DO ALL THE WORK ON A CLEAN, SOFT SURFACE TO PREVENT DAMAGE TO THE COMPONENTS.**

CAUTION: **MAKE SURE THAT ALL THE PARTS ARE CLEAN BEFORE YOU ASSEMBLE THEM.**

SUB TASK 25-41-51-410-006-A01

D2549010400800 D2549010402000 D2549010402800 D2549010607400 D2549010607600 D2549010607800 D2549010609000 D2549010609400 D2549010609800 D2549010610400 D2549010611200 D2549010611600 D2549010611800 D2549010612000 D2549010613800 D2549020400400 D2549020403800 D2549020404600 D2549020404800 D2549020405000 D2549020405200 D2549020405400 D2549020510600 D2549020510800 D2549020511000 D2549020511600 D2549020511800 D2549020512400 D2549020512600 D2549020512800 D2549020513600 D2549020514600 D2549020514800 D2549020711600 D2549020800200 D2549020800400 D2549020801000 D2549020802000 D2549020802400 D2549020802600 D2549020803000 D2549020803200 D2549020803400 D2549020805000 D2549020805200 D2549020805600 D2549020806400 D2549020806600 D2549020807400 D2549020807600 D2549020807800 D2549020808200 D2549020808400 D2549020809000 D2549020809400 D2549020809800 D2549020810400 D2549020812000 D2549020813600 D2549020814200 D2549020814600 D2549030402000 D2549030402200 D2549030402400 D2549030403400 D2549030403600 D2549030404400 D2549030404600 D2549030405200 D2549030405400 D2549030407200 D2549030408200 D2549030408600 D2549030610600 D2549030611200 D2549030611800 D2549030612200 D2549030612600 D2549030612800 D2549030613200 D2549030613400 D2549030614600 R225401134-010 R225401134-012 R225401134-026 R225401134-028 R225401134-030 R225401134-032 R225401134-034 R225401134-036 R225401168-002 R225401168-008 R225401168-010 R225401168-012 R225401168-022 R225401168-024 R225401168-026 R225401183-000 R225401183-002 R225401192-002 R225401199-006 R225401605-002 R225401619-002 R225401629-000

R225401629-002 R225401639-000 R225401639-002 R225401643-000 R225401643-002 R225401643-004 R225401693-000

1. Installation of the Toilet Unit and the Toilet Shroud (12E-1)

   (a) Attach the toilet assembly 12E-270 with the bolts 12E-240, the lock washers 12E-250 and the washers 12E-260 to the lavatory structure. Use a torque value of 10 N.m (7.376 lbf.ft).

   NOTE: For further instructions, see CMMV 38-34-20_29780 (toilet assembly).

   NOTE: For further instructions, see CMMV 38-34-30_29780 (toilet assembly).

   (b) Attach the ground cable in accordance with the Process and Material Specification PMS 01-04-58 to the toilet assembly 12E-270.

   (c) Attach the support bracket 12E-180 with the screws 12E-210, the washers 12E-220 and the nuts 12E-230 to the lavatory structure.

   (d) Attach the support bracket 12E-190 with the screws 12E-200 and the washers 12E-220 to the lavatory structure.

   (e) Assemble the toilet seat assembly 12E-090 as follows:

      1 Attach the unpainted toilet cover 12E-130 with the unpainted fasteners 12E-120 to the unpainted toilet seat 12E-150.

   (f) Attach the toilet seat assembly 12E-090 with the gaskets 12E-110 and the nuts 12E-100 to the toilet shroud assembly 12E-010.

   (g) Attach the toilet shroud assembly 12E-010 with the screws 12E-070 and the nuts 12E-080 to the lavatory structure.

SUB TASK 25-41-51-410-006-B01
D2549010603600

2. Installation of the Toilet Unit and the Toilet Shroud (12E-1)

   (a) Attach the toilet assembly 12E-270 with the bolts 12E-240, the lock washers 12E-250 and the washers 12E-260 to the lavatory structure. Use a torque value of 10 N.m (7.376 lbf.ft).

   NOTE: For further instructions, see CMMV 38-34-20_29780 (toilet assembly).

(b) Attach the ground cable in accordance with the Process and Material Specification PMS 01-04-58 to the toilet assembly 12E-270.

(c) Attach the support bracket 12E-180 with the screws 12E-210, the washers 12E-220 and the nuts 12E-230 to the lavatory structure.

(d) Attach the support bracket 12E-190 with the screws 12E-200 and the washers 12E-220 to the lavatory structure.

(e) Assemble the toilet seat assembly 12E-090 as follows:

1 Attach the unpainted toilet cover 12E-130 with the unpainted fasteners 12E-120 to the unpainted toilet seat 12E-150.

(f) Attach the toilet seat assembly 12E-090 with the gaskets 12E-110 and the nuts 12E-100 to the toilet shroud assembly 12E-010.

(g) Attach the toilet shroud assembly 12E-010 with the screws 12E-070 and the nuts 12E-080 to the lavatory structure.

TASK 25-41-51-400-814-G01
D2549030404800 D2549030406400 R225401648-000 R225401648-002

134. Installation of the Toilet Unit and the Toilet Shroud

A. General

This task gives you the installation and assembly procedures of the component.

B. Job Set-up Information

(1) Not applicable

C. Procedure

WARNING: BE CAREFUL WHEN YOU USE SOLVENTS/CLEANING AGENTS, SEALANTS AND OTHER MATERIALS. OBEY THE MATERIAL MANUFACTURER'S INSTRUCTIONS AND THE LOCAL REGULATIONS. MAKE SURE THAT THERE IS A GOOD FLOW OF AIR THROUGH THE WORK AREA. DO NOT BREATHE THE FUMES. DO NOT SMOKE. DO NOT USE THESE MATERIALS NEAR A FLAME, SPARKS OR SOURCES OF HEAT. USE PROTECTIVE CLOTHING, GOGGLES AND GLOVES. IF YOU GET ONE OF THESE MATERIALS ON YOUR SKIN OR IN YOUR EYES, FLUSH IT AWAY WITH A FLOW OF CLEAN WATER. IF YOU GET ONE OF THESE MATERIALS IN YOUR MOUTH, GET IMMEDIATE MEDICAL AID. IN GENERAL, THESE MATERIALS ARE POISONOUS, FLAMMABLE AND SKIN IRRITANTS.

CAUTION: DO ALL THE WORK ON A CLEAN, SOFT SURFACE TO PREVENT DAMAGE TO THE COMPONENTS.

CAUTION: MAKE SURE THAT ALL THE PARTS ARE CLEAN BEFORE YOU ASSEMBLE THEM.

SUB TASK 25-41-51-410-007-A01

1. Installation of the Toilet Unit and the Toilet Shroud (12F-1)

(a) Attach the toilet assembly 12F-270 with the bolts 12F-240, the lock washers 12F-250 and the washers 12F-260 to the lavatory structure. Use a torque value of 10 N.m (7.376 lbf.ft).

NOTE: For further instructions, see CMMV 38-34-20_29780 (toilet assembly).

NOTE: For further instructions, see CMMV 38-34-30_29780 (toilet assembly).

(b) Attach the ground cable in accordance with the Process and Material Specification PMS 01-04-58 to the toilet assembly 12F-270.

(c) Attach the support bracket 12F-180 with the screws 12F-210, the washers 12F-220 and the nuts 12F-230 to the lavatory structure.

(d) Attach the support bracket 12F-190 with the screws 12F-200 and the washers 12F-220 to the lavatory structure.

(e) Assemble the toilet seat assembly 12F-090 as follows:

1 Attach the unpainted toilet cover 12F-130 with the unpainted fasteners 12F-120 to the unpainted toilet seat 12F-150.

(f) Attach the toilet seat assembly 12F-090 with the gaskets 12F-110 and the nuts 12F-100 to the toilet shroud assembly 12F-010.

(g) Attach the toilet shroud assembly 12F-010 with the screws 12F-070 and the nuts 12F-080 to the lavatory structure.

TASK 25-41-51-400-814-H01

D2547160900200 D2547160900400 D2549010401000 D2549010401400 D2549010401600
D2549010401800 D2549010402200 D2549010402400 D2549010403200 D2549010403400
D2549010403600 D2549010403800 D2549010404000 D2549010404200 D2549010404400
D2549010404600 D2549010404800 D2549010405000 D2549010405200 D2549010405400
D2549010405800 D2549010406000 D2549010406200 D2549010406400 D2549010406800
D2549010407000 D2549010610600 D2549010613600 D2549020300000 D2549020300400
D2549020300600 D2549020300800 D2549020301000 D2549020301600 D2549020301800
D2549020302000 D2549020302800 D2549020400600 D2549020400800 D2549020401000
D2549020401200 D2549020401400 D2549020401600 D2549020402000 D2549020402200
D2549020402400 D2549020402600 D2549020403000 D2549020403200 D2549020403400
D2549020403600 D2549020404000 D2549020406000 D2549020406200 D2549020406400
D2549020406600 D2549020406800 D2549020407000 D2549020407200 D2549020407400
D2549020407600 D2549020407800 D2549020408000 D2549020408200 D2549020408600
D2549020408800 D2549020409000 D2549020409200 D2549020409400 D2549020409600
D2549020409800 D2549020410200 D2549020410400 D2549020410600 D2549020410800
D2549020411000 D2549020411200 D2549020411400 D2549020411600 D2549020411800
D2549020412000 D2549020412200 D2549020412400 D2549020412600 D2549020412800
D2549020413000 D2549020413200 D2549020413400 D2549020413600 D2549020413800
D2549020414000 D2549020414200 D2549020414600 D2549020414800 D2549020804400
D2549020807200 D2549020809600 D2549020811800 D2549020813200 D2549020813800
D2549030407400 D2549030407600 D2549030409000 D2549030409200 D2549030409400
D2549030409600 D2549030410000 D2549030410200 D2549030410600 D2549030410800
D2549030411200 D2549030411400 D2549030411600 D2549030411800 D2549030412000
D2549030412400 D2549030412600 D2549030412800 D2549030413000 D2549030413200
D2549030413600 D2549030414000 D2549030414200 D2549030414400 D2549030414800
D2549030700000 D2549030700200 D2549030700400 D2549030701000 D2549030701200
D2549030701400 D2549030701600 D2549030702200 D2549030702400 D2549030702600
D2549030702800 D2549030703200 D2549030703400 D2549030703600 D2549030703800
D2549030704000 D2549030704800 D2549030705200 D2549040500200 D2549040500400
D2549040500800 D2549040501000 D2549040501200 D2549040501400 D2549040501600
D2549040501800 D2549040502000 R225401134-014 R225401134-038 R225401136-006
R225401136-008 R225401136-012 R225401136-014 R225401136-024 R225401152-010
R225401183-004 R225401183-006 R225401196-012 R225401196-014 R225401196-016
R225401196-018 R225401196-020 R225401196-022 R225401196-024 R225401196-042
R225401196-058 R225401196-060 R225401196-062 R225401196-064 R225401196-066
R225401196-068 R225401196-070 R225401199-010 R225401199-012 R225401602-000
R225401611-000 R225401611-012 R225401611-014 R225401611-016 R225401611-018
R225401611-020 R225401624-000 R225401627-000 R225401627-002 R225401627-004
R225401643-006 R225401643-008 R225401646-002 R225401648-004 R225401648-006
R225401648-008 R225401649-000 R225401671-000 R225401671-002 R225401673-002
R225401673-004 R225401673-006 R225401675-000 R225401676-000 R225401683-000
R225401685-000 R225401685-002 R225401688-000 R225401689-004 R225401689-006

R225401691-000 R225401691-002 R225401697-000 R225401697-002 R225401803-000 R225401803-002 R225401811-000

135. Installation of the Toilet Unit and the Toilet Shroud

A. General

This task gives you the installation and assembly procedures of the component.

B. Job Set-up Information

(1) Not applicable

C. Procedure

WARNING: **BE CAREFUL WHEN YOU USE SOLVENTS/CLEANING AGENTS, SEALANTS AND OTHER MATERIALS. OBEY THE MATERIAL MANUFACTURER'S INSTRUCTIONS AND THE LOCAL REGULATIONS. MAKE SURE THAT THERE IS A GOOD FLOW OF AIR THROUGH THE WORK AREA. DO NOT BREATHE THE FUMES. DO NOT SMOKE. DO NOT USE THESE MATERIALS NEAR A FLAME, SPARKS OR SOURCES OF HEAT. USE PROTECTIVE CLOTHING, GOGGLES AND GLOVES. IF YOU GET ONE OF THESE MATERIALS ON YOUR SKIN OR IN YOUR EYES, FLUSH IT AWAY WITH A FLOW OF CLEAN WATER. IF YOU GET ONE OF THESE MATERIALS IN YOUR MOUTH, GET IMMEDIATE MEDICAL AID. IN GENERAL, THESE MATERIALS ARE POISONOUS, FLAMMABLE AND SKIN IRRITANTS.**

CAUTION: **DO ALL THE WORK ON A CLEAN, SOFT SURFACE TO PREVENT DAMAGE TO THE COMPONENTS.**

CAUTION: **MAKE SURE THAT ALL THE PARTS ARE CLEAN BEFORE YOU ASSEMBLE THEM.**

SUB TASK 25-41-51-410-008-A01

D2547160900200 D2547160900400 D2549010401000 D2549010401400 D2549010401600 D2549010401800 D2549010402200 D2549010402400 D2549010403200 D2549010403400 D2549010403600 D2549010403800 D2549010404000 D2549010404200 D2549010404400 D2549010404600 D2549010404800 D2549010405000 D2549010405200 D2549010405400 D2549010405800 D2549010406000 D2549010406200 D2549010406400 D2549010406800 D2549010407000 D2549010610600 D2549010613600 D2549020300000 D2549020300400 D2549020300600 D2549020300800 D2549020301000 D2549020301600 D2549020301800 D2549020302000 D2549020302800 D2549020400600 D2549020400800 D2549020401000 D2549020401200 D2549020401400 D2549020401600 D2549020402000 D2549020402200 D2549020402400 D2549020402600 D2549020403000

D2549020403200 D2549020403400 D2549020403600 D2549020404000
D2549020406000 D2549020406200 D2549020406400 D2549020406600
D2549020406800 D2549020407000 D2549020407200 D2549020407400
D2549020407600 D2549020407800 D2549020408000 D2549020408200
D2549020408600 D2549020408800 D2549020409000 D2549020409200
D2549020409400 D2549020409600 D2549020409800 D2549020410200
D2549020410400 D2549020410600 D2549020410800 D2549020411000
D2549020411200 D2549020411400 D2549020411600 D2549020411800
D2549020412000 D2549020412200 D2549020412400 D2549020412600
D2549020412800 D2549020413000 D2549020413200 D2549020413400
D2549020413600 D2549020413800 D2549020414000 D2549020414200
D2549020414600 D2549020414800 D2549020804400 D2549020807200
D2549020809600 D2549020811800 D2549020813200 D2549020813800
D2549030407400 D2549030407600 D2549030409000 D2549030409200
D2549030409400 D2549030409600 D2549030410000 D2549030410200
D2549030410600 D2549030410800 D2549030411200 D2549030411400
D2549030411600 D2549030411800 D2549030412000 D2549030412400
D2549030412600 D2549030412800 D2549030413000 D2549030413200
D2549030413600 D2549030414000 D2549030414200 D2549030414400
D2549030414800 D2549030700000 D2549030700200 D2549030700400
D2549030701000 D2549030701400 D2549030701600 D2549030702200
D2549030702400 D2549030702600 D2549030702800 D2549030703200
D2549030703400 D2549030703600 D2549030703800 D2549030704000
D2549030704800 D2549030705200 D2549040500200 D2549040500400
D2549040500800 D2549040501000 D2549040501200 D2549040501400
D2549040501600 D2549040501800 D2549040502000 R225401134-014 R225401134-
038 R225401136-006 R225401136-008 R225401136-012 R225401136-014 R225401136-
024 R225401152-010 R225401183-004 R225401183-006 R225401196-012 R225401196-
014 R225401196-016 R225401196-018 R225401196-020 R225401196-022 R225401196-
024 R225401196-042 R225401196-058 R225401196-060 R225401196-062 R225401196-
064 R225401196-066 R225401196-068 R225401196-070 R225401199-010 R225401199-
012 R225401602-000 R225401611-000 R225401611-012 R225401611-014
R225401611-016 R225401611-018 R225401611-020 R225401624-000 R225401627-000
R225401627-002 R225401627-004 R225401643-006 R225401643-008 R225401646-
002 R225401648-004 R225401648-006 R225401648-008 R225401649-000
R225401671-000 R225401671-002 R225401673-002 R225401673-004 R225401673-
006 R225401675-000 R225401676-000 R225401683-000 R225401685-000
R225401685-002 R225401688-000 R225401689-004 R225401689-006 R225401691-
000 R225401691-002 R225401697-000 R225401697-002 R225401803-000
R225401803-002 R225401811-000

1. Installation of the Toilet Unit and the Toilet Shroud (12G-1)

(a) Attach the toilet assembly 12G-280 with the bolts 12G-250, the lock washers 12G-260 and the washers 12G-270 to the lavatory structure. Use a torque value of 10 N.m (7.376 lbf.ft).

NOTE: For further instructions, see CMMV 38-34-20_29780 (toilet assembly).

NOTE: For further instructions, see CMMV 38-34-30_29780 (toilet assembly).

(b) Attach the ground cable in accordance with the Process and Material Specification PMS 01-04-58 to the toilet assembly 12G-280.

(c) Attach the support bracket 12G-200 with the screws 12G-220, the washers 12G-230, 12G-235 and the nuts 12G-240 to the lavatory structure.

(d) Attach the support bracket 12G-190 with the screws 12G-210 and the washers 12G-230 to the lavatory structure.

(e) Assemble the toilet seat assembly 12G-090 as follows:

1 Attach the toilet cover assembly 12G-130 with the fasteners 12G-120 or the unpainted fasteners 12G-125 to the seat assembly 12G-150.

(f) Attach the toilet seat assembly 12G-090 with the gaskets 12G-110 and the nuts 12G-100 to the toilet shroud assembly 12G-010.

(g) Attach the toilet shroud assembly 12G-010 with the screws 12G-070 and the nuts 12G-080 to the lavatory structure.

SUB TASK 25-41-51-410-008-B01
D2549030701200

2. Installation of the Toilet Unit and the Toilet Shroud (12G-1)

(a) Attach the toilet assembly 12G-280 with the bolts 12G-250, the lock washers 12G-260 and the washers 12G-270 to the lavatory structure. Use a torque value of 10 N.m (7.376 lbf.ft).

NOTE: For further instructions, see CMMV 38-34-20_29780 (toilet assembly).

NOTE: For further instructions, see CMMV 38-34-30_29780 (toilet assembly).

(b) Attach the ground cable in accordance with the Process and Material Specification PMS 01-04-58 to the toilet assembly 12G-280.

(c) Attach the support bracket 12G-190 with the screws 12G-220, the washers 12G-230, 12G-235 and the nuts 12G-240 to the lavatory structure.

(d) Attach the support bracket 12G-200 with the screws 12G-210 and the washers 12G-230 to the lavatory structure.

(e) Assemble the toilet seat assembly 12G-090 as follows:

1 Attach the toilet cover assembly 12G-130 with the fasteners 12G-120 or the unpainted fasteners 12G-125 to the seat assembly 12G-150.

(f) Attach the toilet seat assembly 12G-090 with the gaskets 12G-110 and the nuts 12G-100 to the toilet shroud assembly 12G-010.

(g) Attach the toilet shroud assembly 12G-010 with the screws 12G-070 and the nuts 12G-080 to the lavatory structure.

TASK 25-41-51-400-814-J01
D2547161903000 D2549010405600 D2549030412200 D2549030413400 D2549030700600 D2549030700800 D2549030701800 D2549030702000 D2549030703000 D2549030704200 D2549030704400 D2549030704600 R225401808-000 R225401814-000

136. Installation of the Toilet Unit and the Toilet Shroud

A. General

This task gives you the installation and assembly procedures of the component.

B. Job Set-up Information

(1) Not applicable

C. Procedure

WARNING: BE CAREFUL WHEN YOU USE SOLVENTS/CLEANING AGENTS, SEALANTS AND OTHER MATERIALS. OBEY THE MATERIAL MANUFACTURER'S INSTRUCTIONS AND THE LOCAL REGULATIONS. MAKE SURE THAT THERE IS A GOOD FLOW OF AIR THROUGH THE WORK AREA. DO NOT BREATHE THE FUMES. DO NOT SMOKE. DO NOT USE THESE MATERIALS NEAR A FLAME, SPARKS OR SOURCES OF HEAT. USE PROTECTIVE CLOTHING, GOGGLES AND GLOVES. IF YOU GET ONE OF THESE MATERIALS ON YOUR SKIN OR IN YOUR EYES, FLUSH IT AWAY WITH A FLOW OF CLEAN WATER. IF YOU GET ONE OF THESE MATERIALS IN YOUR MOUTH, GET IMMEDIATE MEDICAL AID. IN GENERAL, THESE MATERIALS ARE POISONOUS, FLAMMABLE AND SKIN IRRITANTS.

CAUTION: DO ALL THE WORK ON A CLEAN, SOFT SURFACE TO PREVENT DAMAGE TO THE COMPONENTS.

CAUTION: MAKE SURE THAT ALL THE PARTS ARE CLEAN BEFORE YOU ASSEMBLE THEM.

SUB TASK 25-41-51-410-009-A01
D2549010405600 D2549030412200 D2549030413400 D2549030700600 D2549030700800 D2549030701800 D2549030702000 D2549030703000 D2549030704200 D2549030704400 D2549030704600 R225401808-000 R225401814-000

1. Installation of the Toilet Unit and the Toilet Shroud (12H-1)

(a) Attach the toilet assembly 12H-310 with the bolts 12H-280, the lock washers 12H-290 and the washers 12H-300 to the lavatory structure. Use a torque value of 10 N.m (7.376 lbf.ft).

NOTE: For further instructions, see CMMV 38-34-20_29780 (toilet assembly).

NOTE: For further instructions, see CMMV 38-34-30_29780 (toilet assembly).

(b) Attach the ground cable in accordance with the Process and Material Specification PMS 01-04-58 to the toilet assembly 12H-310.

(c) Attach the support bracket 12H-220 with the screws 12H-250, the washers 12H-260 and the nuts 12H-270 to the lavatory structure.

(d) Attach the support bracket 12H-230 with the screws 12H-240 and the washers 12H-260 to the lavatory structure.

(e) Assemble the toilet seat assembly 12H-090 as follows:

1 Attach the toilet cover assembly 12H-140 with the fasteners 12H-120 or the unpainted fasteners 12H-130 to the seat assembly 12H-170.

(f) Attach the toilet seat assembly 12H-090 with the gaskets 12H-110 and the nuts 12H-100 to the toilet shroud assembly 12H-010.

(g) Attach the toilet shroud assembly 12H-010 with the screws 12H-070 and the nuts 12H-080 to the lavatory structure.

SUB TASK 25-41-51-410-009-B01
D2547161903000

2. Installation of the Toilet Unit and the Toilet Shroud (12H-1)

(a) Attach the toilet assembly 12H-310 with the bolts 12H-280, the lock washers 12H-290 and the washers 12H-300 to the lavatory structure. Use a torque value of 10 N.m (7.376 lbf.ft).

NOTE: For further instructions, see CMMV 38-34-16_29780 (toilet assembly).

(b) Attach the ground cable in accordance with the Process and Material Specification PMS 01-04-58 to the toilet assembly 12H-310.

(c) Attach the support bracket 12H-220 with the screws 12H-250, the washers 12H-260 and the nuts 12H-270 to the lavatory structure.

(d) Attach the support bracket 12H-230 with the screws 12H-240 and the washers 12H-260 to the lavatory structure.

(e) Assemble the toilet seat assembly 12H-090 as follows:

1 Attach the toilet cover assembly 12H-140 with the fasteners 12H-120 or the unpainted fasteners 12H-130 to the seat assembly 12H-170.

(f) Attach the toilet seat assembly 12H-090 with the gaskets 12H-110 and the nuts 12H-100 to the toilet shroud assembly 12H-010.

(g) Attach the toilet shroud assembly 12H-010 with the screws 12H-070 and the nuts 12H-080 to the lavatory structure.

TASK 25-41-51-400-814-K01
D2549020712000 D2549020712600 D2549030414600 D2549030705600

137. Installation of the Toilet Unit and the Toilet Shroud

A. General

This task gives you the installation and assembly procedures of the component.

B. Job Set-up Information

(1) Not applicable

C. Procedure

WARNING: BE CAREFUL WHEN YOU USE SOLVENTS/CLEANING AGENTS, SEALANTS AND OTHER MATERIALS. OBEY THE MATERIAL MANUFACTURER'S INSTRUCTIONS AND THE LOCAL REGULATIONS. MAKE SURE THAT THERE IS A GOOD FLOW OF AIR THROUGH THE WORK AREA. DO NOT BREATHE THE FUMES. DO NOT SMOKE. DO NOT USE THESE MATERIALS NEAR A FLAME, SPARKS OR SOURCES OF HEAT. USE PROTECTIVE CLOTHING, GOGGLES AND GLOVES. IF YOU GET ONE OF THESE MATERIALS ON YOUR SKIN OR IN YOUR EYES, FLUSH IT AWAY WITH A FLOW OF CLEAN WATER. IF YOU GET ONE OF THESE MATERIALS IN YOUR MOUTH, GET IMMEDIATE MEDICAL AID. IN GENERAL, THESE MATERIALS ARE POISONOUS, FLAMMABLE AND SKIN IRRITANTS.

CAUTION: DO ALL THE WORK ON A CLEAN, SOFT SURFACE TO PREVENT DAMAGE TO THE COMPONENTS.

CAUTION: MAKE SURE THAT ALL THE PARTS ARE CLEAN BEFORE YOU ASSEMBLE THEM.

SUB TASK 25-41-51-410-010-A01

1. Installation of the Toilet Unit and the Toilet Shroud (12J-1)

(a) Attach the toilet assembly 12J-300 with the bolts 12J-270, the lock washers 12J-280 and the washers 12J-290 to the lavatory structure. Use a torque value of 10 N.m (7.376 lbf.ft).

NOTE: For further instructions, see CMMV 38-34-20_29780 (toilet assembly).

NOTE: For further instructions, see CMMV 38-34-30_29780 (toilet assembly).

(b) Attach the ground cable in accordance with the Process and Material Specification PMS 01-04-58 to the toilet assembly 12J-300.

(c) Attach the support bracket 12J-210 with the screws 12J-240, the washers 12J-250 and the nuts 12J-260 to the lavatory structure.

(d) Attach the support bracket 12J-220 with the screws 12J-230 and the washers 12J-250 to the lavatory structure.

(e) Assemble the toilet seat assembly 12J-050 as follows:

1 Attach the toilet cover assembly 12J-060 with the damper assemblies 12J-150, 12J-180 to the seat assembly 12J-100.

(f) Attach the toilet seat assembly 12J-050 with the gaskets 12J-160, 12J-190 and the nuts 12J-170, 12J-200 to the toilet shroud assembly 12J-010.

(g) Attach the toilet shroud assembly 12J-010 with the screws 12J-030 and the nuts 12J-040 to the lavatory structure.

TASK 25-41-51-400-814-L01
D2549030603600 R225401168-018

138. Installation of the Toilet Unit and the Toilet Shroud

A. General

- Not applicable

B. Procedure

SUB TASK 25-41-51-400-100-A01
1. Installation of the Toilet Unit and the Toilet Shroud

(a) Not applicable.

TASK 25-41-51-400-815-A01

D2549010500000 D2549010500400 D2549010500600 D2549010500800 D2549010501000 D2549010501200 D2549010501400 D2549010501600 D2549010501800 D2549010502000 D2549010502200 D2549010502400 D2549010502600 D2549010502800 D2549010503200 D2549010503400 D2549010503600 D2549010503800 D2549010505000 D2549010505200 D2549010505600 D2549010505800 D2549010506000 D2549010506200 D2549010506400 D2549010506800 D2549010507000 D2549010507200 D2549010507400 D2549010507600 D2549010508200 D2549010509200 D2549010511200 D2549020500000 D2549020500400 D2549020500600 D2549020500800 D2549020501000 D2549020501200 D2549020501400 D2549020501600 D2549020501800 D2549020502000 D2549020502400 D2549020502600 D2549020502800 D2549020503000 D2549020503200 D2549020503400 D2549020503800 D2549020504200 D2549020504400 D2549020504600 D2549020504800 D2549020505000 D2549020505200 D2549020505400 D2549020505800 D2549020506000 D2549020600000 D2549020600200 D2549020600800 D2549020602400 D2549020603000 D2549020603600 D2549020603800 D2549020604000 D2549030500200 D2549030500400 D2549030500600 D2549030500800 D2549030501000 D2549030501200 D2549030501400 D2549030501600 D2549030501800 D2549030502000 D2549030502200 D2549030502400 D2549030502800 D2549030503000 D2549030503200 R225401107-000 R225401107-002 R225401115-002 R225401139-000 R225401145-000 R225401146-000 R225401146-002 R225401188-000 R225401188-002 R225401188-004

139. Assembly of the Door

A. General

This task gives you the assembly procedures of the component.

B. Job Set-up Information

(1) Consumable Materials

REFERENCE	DESIGNATION
08-007	Sealant, High Temperature

Table 7001
Consumable Materials

C. Procedure

WARNING: **BE CAREFUL WHEN YOU USE SOLVENTS/CLEANING AGENTS, SEALANTS AND OTHER MATERIALS. OBEY THE MATERIAL MANUFACTURER'S INSTRUCTIONS AND THE LOCAL REGULATIONS. MAKE SURE THAT THERE IS A GOOD FLOW OF AIR THROUGH THE WORK AREA. DO NOT BREATHE THE FUMES. DO NOT SMOKE. DO NOT USE THESE MATERIALS NEAR A FLAME, SPARKS OR SOURCES OF HEAT. USE PROTECTIVE CLOTHING, GOGGLES AND GLOVES. IF YOU GET ONE OF THESE MATERIALS ON YOUR SKIN OR IN YOUR EYES, FLUSH IT AWAY WITH A FLOW OF CLEAN WATER. IF YOU GET ONE OF THESE MATERIALS IN YOUR MOUTH, GET IMMEDIATE MEDICAL AID. IN GENERAL, THESE MATERIALS ARE POISONOUS, FLAMMABLE AND SKIN IRRITANTS.**

CAUTION: **DO ALL THE WORK ON A CLEAN, SOFT SURFACE TO PREVENT DAMAGE TO THE COMPONENTS.**

CAUTION: **MAKE SURE THAT ALL THE PARTS ARE CLEAN BEFORE YOU ASSEMBLE THEM.**

SUB TASK 25-41-51-440-125-A01

D2549010500000 D2549010500400 D2549010500600 D2549010500800 D2549010501000 D2549010501200 D2549010501400 D2549010501600 D2549010501800 D2549010502000 D2549010502200 D2549010502400 D2549010502600 D2549010502800 D2549010503200 D2549010503400 D2549010503600 D2549010503800 D2549010505000 D2549010505200 D2549010505600 D2549010505800 D2549010506000 D2549010506200 D2549010506400 D2549010506800 D2549010507000 D2549010507200 D2549010507400 D2549010507600 D2549010508200 D2549010509200 D2549010511200 D2549020500000 D2549020500400 D2549020500600 D2549020500800 D2549020501000 D2549020501200 D2549020501400 D2549020501600 D2549020501800 D2549020502000 D2549020502400 D2549020502600 D2549020502800 D2549020503000 D2549020503200 D2549020503400 D2549020503800 D2549020504200 D2549020504400 D2549020504600 D2549020504800 D2549020505000 D2549020505200 D2549020505400 D2549020505800 D2549020506000 D2549020600000 D2549020600200 D2549020600800 D2549020602400 D2549020603000 D2549020603600 D2549020603800 D2549020604000 D2549030500200 D2549030500400 D2549030500600 D2549030501000 D2549030501200 D2549030501400 D2549030501600 D2549030501800 D2549030502200 D2549030502400 D2549030503000 D2549030503200 R225401107-000 R225401107-002 R225401115-002 R225401139-000 R225401145-000 R225401146-000 R225401146-002 R225401188-000 R225401188-002

1. Assembly of the Door (11-1)

   (a) Attach the air outlets 11-140 with the screws 11-150.

(b) Attach the latch assembly 11-120 with the screws 11-020 to the single door assembly 11-001.

NOTE: For further instructions, see CMMV 25-41-60_80477 (latch assembly).

(c) Attach the threaded bolt 11-100.

(d) Assembly and Installation of the Lock Assy 11-090

1 Install the release system 11-094 and the lock 11-092.

2 Install the slider pin to the lock 11-092.

3 Turn the folding door assy over, lift the flap above the lock 11-092 and install the screws that install the release system 11-094.

4 Install the knob 11-096 to the lock 11-092 and the inside face of the folding door assy with a spanner.

(e) Install the screws 11-020.

(f) Attach the sections 11-050, 11-060 with the screws 11-040.

(g) Assemble the hinge 11-010 as follows:

WARNING: BE CAREFUL WHEN YOU USE MATERIAL NO. 08-007 SEALANT, HIGH TEMPERATURE. OBEY THE MATERIAL MANUFACTURER'S INSTRUCTIONS.

1 Apply the Material No. 08-007 Sealant, High Temperature to the setscrews 11-015 and attach the setscrews 11-015 to the hinge 11-010.

(h) Attach the hinge 11-010 with the screws 11-020 and the washers 11-030.

(i) Install and assemble the ashtray assemblies 11-110 as follows:

1 Attach the screws 11-040 to the ashtray case 11-115.

2 Attach the ashtray cover 11-113 to the ashtray case 11-115.

(j) Attach the coat hook 11-080 with the screw 11-070.

SUB TASK 25-41-51-440-125-B01
D2549030500800 D2549030502000 D2549030502800 R225401188-004

2. Assembly of the Door (11-1)

(a) Attach the air outlets 11-140 with the screws 11-150.

(b) Attach the latch assembly 11-125 with the screws 11-020 to the single door assembly 11-001.

(c) Attach the threaded bolt 11-100.

(d) Assembly and Installation of the Lock Assy 11-090

1 Install the release system 11-094 and the lock 11-092.

2 Install the slider pin to the lock 11-092.

3 Turn the folding door assy over, lift the flap above the lock 11-092 and install the screws that install the release system 11-094.

4 Install the knob 11-096 to the lock 11-092 and the inside face of the folding door assy with a spanner.

(e) Install the screws 11-020.

(f) Attach the sections 11-050, 11-060 with the screws 11-040.

(g) Assemble the hinge 11-010 as follows:

WARNING: BE CAREFUL WHEN YOU USE MATERIAL NO. 08-007 SEALANT, HIGH TEMPERATURE. OBEY THE MATERIAL MANUFACTURER'S INSTRUCTIONS.

1 Apply the Material No. 08-007 Sealant, High Temperature to the setscrews 11-015 and attach the setscrews 11-015 to the hinge 11-010.

(h) Attach the hinge 11-010 with the screws 11-020 and the washers 11-030.

(i) Install and assemble the ashtray assemblies 11-110 as follows:

1 Attach the screws 11-040 to the ashtray case 11-115.

2 Attach the ashtray cover 11-113 to the ashtray case 11-115.

(j) Attach the coat hook 11-080 with the screw 11-070.

TASK 25-41-51-400-815-B01

D2549010505400 D2549010508000 D2549010508600 D2549020504000 D2549020600400 D2549020601000 D2549020601400 D2549020601600 D2549020602000 D2549020602600 D2549020602800 D2549020603400 D2549020606400 D2549020607200 D2549030502600 D2549030503400 R225401128-000 R225401133-000 R225401134-000 R225401188-006

140. Assembly of the Door

A. General

This task gives you the assembly procedures of the component.

B. Job Set-up Information

(1) Consumable Materials

REFERENCE	DESIGNATION
08-007	Sealant, High Temperature

Table 7002
Consumable Materials

C. Procedure

WARNING: **BE CAREFUL WHEN YOU USE SOLVENTS/CLEANING AGENTS, SEALANTS AND OTHER MATERIALS. OBEY THE MATERIAL MANUFACTURER'S INSTRUCTIONS AND THE LOCAL REGULATIONS. MAKE SURE THAT THERE IS A GOOD FLOW OF AIR THROUGH THE WORK AREA. DO NOT BREATHE THE FUMES. DO NOT SMOKE. DO NOT USE THESE MATERIALS NEAR A FLAME, SPARKS OR SOURCES OF HEAT. USE PROTECTIVE CLOTHING, GOGGLES AND GLOVES. IF YOU GET ONE OF THESE MATERIALS ON YOUR SKIN OR IN YOUR EYES, FLUSH IT AWAY WITH A FLOW OF CLEAN WATER. IF YOU GET ONE OF THESE MATERIALS IN YOUR MOUTH, GET IMMEDIATE MEDICAL AID. IN GENERAL, THESE MATERIALS ARE POISONOUS, FLAMMABLE AND SKIN IRRITANTS.**

CAUTION: **DO ALL THE WORK ON A CLEAN, SOFT SURFACE TO PREVENT DAMAGE TO THE COMPONENTS.**

CAUTION: **MAKE SURE THAT ALL THE PARTS ARE CLEAN BEFORE YOU ASSEMBLE THEM.**

SUB TASK 25-41-51-440-135-A01
D2549020602000 D2549020602600 D2549020602800 D2549020607200
D2549030502600 D2549030503400 R225401134-000 R225401188-006

1. Assembly of the Door (11A-1)

   (a) Attach the air outlets 11A-140 with the screws 11A-150.

   (b) Attach the latch assembly 11A-120 with the screws 11A-023 to the single door assembly 11A-001.

   NOTE: For further instructions, see CMMV 25-41-60_80477 (latch assembly).

   (c) Attach the threaded bolt 11A-100.

   (d) Assembly and Installation of the Lock Assy 11A-090

      1 Install the release system 11A-094 and the lock 11A-092.

      2 Install the slider pin to the lock 11A-092.

      3 Turn the folding door assy over, lift the flap above the lock 11A-092 and install the screws that install the release system 11A-094.

      4 Install the knob 11A-096 to the lock 11A-092 and the inside face of the folding door assy with a spanner.

   (e) Install the screws 11A-020.

   (f) Attach the sections 11A-050, 11A-060 with the screws 11A-040.

   (g) Assemble the hinge 11A-010 as follows:

      WARNING: BE CAREFUL WHEN YOU USE MATERIAL NO. 08-007 SEALANT, HIGH TEMPERATURE. OBEY THE MATERIAL MANUFACTURER'S INSTRUCTIONS.

      1 Apply the Material No. 08-007 Sealant, High Temperature to the setscrews 11A-015 and attach the setscrews 11A-015 to the hinge 11A-010.

   (h) Attach the hinge 11A-010 with the screws 11A-020 and the washers 11A-030.

   (i) Install and assemble the ashtray assemblies 11A-110 as follows:

      1 Attach the screws 11A-040 to the ashtray case 11A-115.

2 Attach the ashtray cover 11A-113 to the ashtray case 11A-115.

(j) Attach the coat hook 11A-080 with the screw 11A-070.

SUB TASK 25-41-51-440-135-B01
D2549020504000 D2549020600400 R225401128-000

2. Assembly of the Door (11A-1)

(a) Attach the air outlets 11A-140 with the screws 11A-150.

(b) Attach the latch assembly 11A-120 with the screws 11A-023 to the single door assembly 11A-001.

NOTE: For further instructions, see CMMV 25-41-60_80477 (latch assembly).

(c) Attach the threaded bolt 11A-100.

(d) Assembly and Installation of the Lock Assy 11A-090

1 Install the release system 11A-094 and the lock 11A-092.

2 Install the slider pin to the lock 11A-092.

3 Turn the folding door assy over, lift the flap above the lock 11A-092 and install the screws that install the release system 11A-094.

4 Install the knob 11A-096 to the lock 11A-092 and the inside face of the folding door assy with a spanner.

(e) Install the screws 11A-020.

(f) Attach the sections 11A-050, 11A-060 with the screws 11A-040.

(g) Attach the hinge 11A-010 with the screws 11A-020 and the washers 11A-030.

(h) Install and assemble the ashtray assemblies 11A-110 as follows:

1 Attach the screws 11A-040 to the ashtray case 11A-115.

2 Attach the ashtray cover 11A-113 to the ashtray case 11A-115.

(i) Attach the coat hook 11A-080 with the screw 11A-070.

SUB TASK 25-41-51-440-135-C01
D2549010505400 D2549010508000 D2549010508600 D2549020601000 D2549020601400 D2549020601600 D2549020603400 D2549020606400 R225401133-000

3. Assembly of the Door (11A-1)

(a) Attach the air outlets 11A-140 with the screws 11A-150.

(b) Attach the latch assembly 11A-125 with the screws 11A-025 to the single door assembly 11A-001.

(c) Attach the threaded bolt 11A-100.

(d) Assembly and Installation of the Lock Assy 11A-090

1 Install the release system 11A-094 and the lock 11A-092.

2 Install the slider pin to the lock 11A-092.

3 Turn the folding door assy over, lift the flap above the lock 11A-092 and install the screws that install the release system 11A-094.

4 Install the knob 11A-096 to the lock 11A-092 and the inside face of the folding door assy with a spanner.

(e) Install the screws 11A-020.

(f) Attach the sections 11A-050, 11A-060 with the screws 11A-040.

(g) Assemble the hinge 11A-010 as follows:

WARNING: BE CAREFUL WHEN YOU USE MATERIAL NO. 08-007 SEALANT, HIGH TEMPERATURE. OBEY THE MATERIAL MANUFACTURER'S INSTRUCTIONS.

1 Apply the Material No. 08-007 Sealant, High Temperature to the setscrews 11A-015 and attach the setscrews 11A-015 to the hinge 11A-010.

(h) Attach the hinge 11A-010 with the screws 11A-020 and the washers 11A-030.

(i) Install and assemble the ashtray assemblies 11A-110 as follows:

1 Attach the screws 11A-040 to the ashtray case 11A-115.

2 Attach the ashtray cover 11A-113 to the ashtray case 11A-115.

(j) Attach the coat hook 11A-080 with the screw 11A-070.

TASK 25-41-51-400-815-C01

D2549010509400 D2549010509600 D2549010509800 D2549010510000 D2549010510400 D2549010510800 D2549010511000 D2549010511600 D2549010512000 D2549010512200 D2549010512400 D2549010600000 D2549010613600 D2549020400000 D2549020404000 D2549020410600 D2549020413800 D2549020506200 D2549020506400 D2549020513600 D2549020604200 D2549020605200 D2549020606600 D2549020607000 D2549020607800 D2549020610600 D2549020611000 D2549020611200 D2549020611400 D2549020612800 D2549020702600 D2549020703200 D2549030504000 D2549030504600 D2549030504800 D2549030505200 D2549030505400 D2549030505600 D2549030506400 D2549030506600 R225401137-000 R225401137-002 R225401137-010 R225401137-012 R225401159-000 R225401176-000

141. Assembly of the Door

A. General

This task gives you the assembly procedures of the component.

B. Job Set-up Information
(1) Consumable Materials

REFERENCE	DESIGNATION
08-007	Sealant, High Temperature

Table 7003
Consumable Materials

C. Procedure

WARNING: **BE CAREFUL WHEN YOU USE SOLVENTS/CLEANING AGENTS, SEALANTS AND OTHER MATERIALS. OBEY THE MATERIAL MANUFACTURER'S INSTRUCTIONS AND THE LOCAL REGULATIONS. MAKE SURE THAT THERE IS A GOOD FLOW OF AIR THROUGH THE WORK AREA. DO NOT BREATHE THE FUMES. DO NOT SMOKE. DO NOT USE THESE MATERIALS NEAR A FLAME, SPARKS OR SOURCES OF HEAT. USE PROTECTIVE CLOTHING, GOGGLES AND GLOVES. IF YOU GET ONE OF THESE MATERIALS ON YOUR SKIN OR IN YOUR EYES, FLUSH IT AWAY WITH A FLOW OF CLEAN WATER. IF YOU GET ONE OF THESE MATERIALS IN YOUR MOUTH, GET IMMEDIATE MEDICAL AID. IN GENERAL, THESE MATERIALS ARE POISONOUS, FLAMMABLE AND SKIN IRRITANTS.**

CAUTION: **DO ALL THE WORK ON A CLEAN, SOFT SURFACE TO PREVENT DAMAGE TO THE COMPONENTS.**

CAUTION: **MAKE SURE THAT ALL THE PARTS ARE CLEAN BEFORE YOU ASSEMBLE THEM.**

SUB TASK 25-41-51-440-136-A01
D2549010509600 D2549010510400 D2549010613600 D2549020400000
D2549020410600 D2549020413800 D2549030504000

1. Assembly of the Door (11B-1)

   (a) Attach the air outlets 11B-160 with the screws 11B-170.

   (b) Attach the latch assembly 11B-145 to the single door assembly 11B-001.

   (c) Attach the threaded bolt 11B-120.

   (d) Assembly and Installation of the Lock Assy 11B-100

      1 Install the release system 11B-104 and the lock 11B-102.

      2 Install the slider pin to the lock 11B-102.

      3 Turn the folding door assy over, lift the flap above the lock 11B-102 and install the screws that install the release system 11B-104.

      4 Install the knob 11B-106 to the lock 11B-102 and the inside face of the folding door assy with a spanner.

   (e) Install the screws 11B-030.

   (f) Attach the sections 11B-060, 11B-070 with the screws 11B-050.

   (g) Assemble the hinge 11B-010 as follows:

      WARNING: **BE CAREFUL WHEN YOU USE MATERIAL NO. 08-007 SEALANT, HIGH TEMPERATURE. OBEY THE MATERIAL MANUFACTURER'S INSTRUCTIONS.**

      1 Apply the Material No. 08-007 Sealant, High Temperature to the setscrews 11B-020 and attach the setscrews 11B-020 to the hinge 11B-010.

   (h) Attach the hinge 11B-010 with the screws 11B-031 and the washers 11B-040.

   (i) Install and assemble the ashtray assemblies 11B-130 as follows:

      1 Attach the screws 11B-050 to the ashtray case 11B-135.

2 Attach the ashtray cover 11B-133 to the ashtray case 11B-135.

(j) Attach the coat hook 11B-090 with the screw 11B-080.

SUB TASK 25-41-51-440-136-B01
D2549010509400 D2549010509800 D2549010510000 D2549010510800 D2549010511000 D2549010511600 D2549010512000 D2549010512200 D2549010512400 D2549010600000 D2549020404000 D2549020506200 D2549020506400 D2549020513600 D2549020604200 D2549020605200 D2549020607000 D2549020607800 D2549020610600 D2549020611000 D2549020611200 D2549020611400 D2549020612800 D2549020702600 D2549020703200 D2549030504600 D2549030504800 D2549030505200 D2549030505400 D2549030505600 D2549030506400 D2549030506600 R225401137-000 R225401137-002 R225401137-010 R225401137-012 R225401159-000 R225401176-000

2. Assembly of the Door (11B-1)

(a) Attach the air outlets 11B-160 with the screws 11B-170.

(b) Attach the latch assembly 11B-140 to the single door assembly 11B-001.

NOTE: For further instructions, see CMMV 25-41-60_80477 (latch assembly).

(c) Attach the threaded bolt 11B-120.

(d) Assembly and Installation of the Lock Assy 11B-100

1 Install the release system 11B-104 and the lock 11B-102.

2 Install the slider pin to the lock 11B-102.

3 Turn the folding door assy over, lift the flap above the lock 11B-102 and install the screws that install the release system 11B-104.

4 Install the knob 11B-106 to the lock 11B-102 and the inside face of the folding door assy with a spanner.

(e) Install the screws 11B-030.

(f) Attach the sections 11B-060, 11B-070 with the screws 11B-050.

(g) Assemble the hinge 11B-010 as follows:

WARNING: **BE CAREFUL WHEN YOU USE MATERIAL NO. 08-007 SEALANT, HIGH TEMPERATURE. OBEY THE MATERIAL MANUFACTURER'S INSTRUCTIONS.**

1 Apply the Material No. 08-007 Sealant, High Temperature to the setscrews 11B-020 and attach the setscrews 11B-020 to the hinge 11B-010.

(h) Attach the hinge 11B-010 with the screws 11B-031 and the washers 11B-040.

(i) Install and assemble the ashtray assemblies 11B-130 as follows:

1 Attach the screws 11B-050 to the ashtray case 11B-135.

2 Attach the ashtray cover 11B-133 to the ashtray case 11B-135.

(j) Attach the coat hook 11B-090 with the screw 11B-080.

SUB TASK 25-41-51-440-136-C01
D2549020606600

3. Assembly of the Door (11B-1)

(a) Attach the air outlets 11B-160 with the screws 11B-170.

(b) Attach the latch assembly 11B-140 with the screws 11B-030 to the single door assembly 11B-001.

NOTE: **For further instructions, see CMMV 25-41-60_80477 (latch assembly).**

(c) Attach the threaded bolt 11B-120.

(d) Assembly and Installation of the Lock Assy 11B-100

1 Install the release system 11B-104 and the lock 11B-102.

2 Install the slider pin to the lock 11B-102.

3 Turn the folding door assy over, lift the flap above the lock 11B-102 and install the screws that install the release system 11B-104.

4 Install the knob 11B-106 to the lock 11B-102 and the inside face of the folding door assy with a spanner.

(e) Install the screws 11B-030.

(f) Attach the sections 11B-060, 11B-070 with the screws 11B-050.

(g) Assemble the hinge 11B-010 as follows:

WARNING: BE CAREFUL WHEN YOU USE MATERIAL NO. 08-007 SEALANT, HIGH TEMPERATURE. OBEY THE MATERIAL MANUFACTURER'S INSTRUCTIONS.

1 Apply the Material No. 08-007 Sealant, High Temperature to the setscrews 11B-020 and attach the setscrews 11B-020 to the hinge 11B-010.

(h) Attach the hinge 11B-010 with the screws 11B-030 and the washers 11B-040.

(i) Install and assemble the ashtray assemblies 11B-130 as follows:

1 Attach the screws 11B-050 to the ashtray case 11B-135.

2 Attach the ashtray cover 11B-133 to the ashtray case 11B-135.

(j) Attach the coat hook 11B-090 with the screw 11B-080.

TASK 25-41-51-400-815-D01

D2549010510200 D2549010510600 D2549010511400 D2549010511800 D2549010513000 D2549010513400 D2549010513600 D2549020506800 D2549020604400 D2549020604800 D2549020605000 D2549020605600 D2549020605800 D2549020606800 D2549020607400 D2549020607600 D2549020608200 D2549020608400 D2549020608600 D2549020609000 D2549020609400 D2549020609600 D2549020610400 D2549020612600 D2549020613200 D2549020613600 D2549020614000 D2549020614600 D2549020701200 D2549020704000 D2549030505800 D2549030506200 D2549030506800 D2549030507000 D2549030509000 R225401107-004 R225401134-002 R225401134-004 R225401134-006 R225401136-016 R225401172-002

142. Assembly of the Door

A. General

This task gives you the assembly procedures of the component.

B. Job Set-up Information

(1) Consumable Materials

REFERENCE	DESIGNATION
08-007	Sealant, High Temperature

Table 7004
Consumable Materials

C. Procedure

WARNING: **BE CAREFUL WHEN YOU USE SOLVENTS/CLEANING AGENTS, SEALANTS AND OTHER MATERIALS. OBEY THE MATERIAL MANUFACTURER'S INSTRUCTIONS AND THE LOCAL REGULATIONS. MAKE SURE THAT THERE IS A GOOD FLOW OF AIR THROUGH THE WORK AREA. DO NOT BREATHE THE FUMES. DO NOT SMOKE. DO NOT USE THESE MATERIALS NEAR A FLAME, SPARKS OR SOURCES OF HEAT. USE PROTECTIVE CLOTHING, GOGGLES AND GLOVES. IF YOU GET ONE OF THESE MATERIALS ON YOUR SKIN OR IN YOUR EYES, FLUSH IT AWAY WITH A FLOW OF CLEAN WATER. IF YOU GET ONE OF THESE MATERIALS IN YOUR MOUTH, GET IMMEDIATE MEDICAL AID. IN GENERAL, THESE MATERIALS ARE POISONOUS, FLAMMABLE AND SKIN IRRITANTS.**

CAUTION: **DO ALL THE WORK ON A CLEAN, SOFT SURFACE TO PREVENT DAMAGE TO THE COMPONENTS.**

CAUTION: **MAKE SURE THAT ALL THE PARTS ARE CLEAN BEFORE YOU ASSEMBLE THEM.**

SUB TASK 25-41-51-440-137-A01

D2549010510600 D2549020604400 D2549020604800 D2549020606800 D2549020607600 D2549020608600 D2549020609000 D2549020609600 D2549020613200 D2549020614600 D2549020701200 D2549030507000 R225401172-002

1. Assembly of the Door (11C-1)

   (a) Attach the air outlets 11C-160 with the screws 11C-170.

   (b) Attach the latch assembly 11C-145 with the screws 11C-030 to the single door assembly 11C-001.

   (c) Attach the threaded bolt 11C-120.

   (d) Assembly and Installation of the Lock Assy 11C-100

      1 Install the release system 11C-104 and the lock 11C-102.

      2 Install the slider pin to the lock 11C-102.

      3 Turn the folding door assy over, lift the flap above the lock 11C-102 and install the screws that install the release system 11C-104.

      4 Install the knob 11C-106 to the lock 11C-102 and the inside face of the folding door assy with a spanner.

   (e) Install the screws 11C-030.

   (f) Attach the sections 11C-060, 11C-070 with the screws 11C-050.

   (g) Assemble the hinge 11C-010 as follows:

      WARNING: BE CAREFUL WHEN YOU USE MATERIAL NO. 08-007 SEALANT, HIGH TEMPERATURE. OBEY THE MATERIAL MANUFACTURER'S INSTRUCTIONS.

      1 Apply the Material No. 08-007 Sealant, High Temperature to the setscrews 11C-020 and attach the setscrews 11C-020 to the hinge 11C-010.

   (h) Attach the hinge 11C-010 with the screws 11C-030 and the washers 11C-040.

   (i) Install and assemble the ashtray assemblies 11C-130 as follows:

      1 Attach the screws 11C-050 to the ashtray case 11C-135.

2 Attach the ashtray cover 11C-133 to the ashtray case 11C-135.

(j) Attach the coat hook 11C-090 with the screw 11C-080.

SUB TASK 25-41-51-440-137-B01
D2549010510200 D2549010511400 D2549010511800 D2549010513000 D2549010513400 D2549010513600 D2549020506800 D2549020605000 D2549020605600 D2549020605800 D2549020607400 D2549020608200 D2549020608400 D2549020609400 D2549020610400 D2549020612600 D2549020613600 D2549020614000 D2549020704000 D2549030505800 D2549030506200 D2549030506800 D2549030509000 R225401107-004 R225401134-002 R225401134-004 R225401134-006 R225401136-016

2. Assembly of the Door (11C-1)

(a) Attach the air outlets 11C-160 with the screws 11C-170.

(b) Attach the latch assembly 11C-140 with the screws 11C-030 to the single door assembly 11C-001.

NOTE: For further instructions, see CMMV 25-41-60_80477 (latch assembly).

(c) Attach the threaded bolt 11C-120.

(d) Assembly and Installation of the Lock Assy 11C-100

1 Install the release system 11C-104 and the lock 11C-102.

2 Install the slider pin to the lock 11C-102.

3 Turn the folding door assy over, lift the flap above the lock 11C-102 and install the screws that install the release system 11C-104.

4 Install the knob 11C-106 to the lock 11C-102 and the inside face of the folding door assy with a spanner.

(e) Install the screws 11C-030.

(f) Attach the sections 11C-060, 11C-070 with the screws 11C-050.

(g) Assemble the hinge 11C-010 as follows:

WARNING: **BE CAREFUL WHEN YOU USE MATERIAL NO. 08-007 SEALANT, HIGH TEMPERATURE. OBEY THE MATERIAL MANUFACTURER'S INSTRUCTIONS.**

1 Apply the Material No. 08-007 Sealant, High Temperature to the setscrews 11C-020 and attach the setscrews 11C-020 to the hinge 11C-010.

(h) Attach the hinge 11C-010 with the screws 11C-030 and the washers 11C-040.

(i) Install and assemble the ashtray assemblies 11C-130 as follows:

1 Attach the screws 11C-050 to the ashtray case 11C-135.

2 Attach the ashtray cover 11C-133 to the ashtray case 11C-135.

(j) Attach the coat hook 11C-090 with the screw 11C-080.

TASK 25-41-51-400-815-E01

D2549010401400 D2549010514000 D2549010514400 D2549010602600 D2549010605200 D2549010607600 D2549010611200 D2549020512400 D2549020604600 D2549020605400 D2549020609800 D2549020610000 D2549020610200 D2549020610800 D2549020611600 D2549020613000 D2549020807400 D2549020809400 D2549030402200 D2549030404800 D2549030405400 D2549030407200 D2549030412400 D2549030507200 D2549030507400 D2549030508600 D2549030510200 D2549030600800 D2549030601600 D2549030603600 D2549030607800 D2549030612600 R225401168-000 R225401168-002 R225401168-004 R225401168-006 R225401168-008 R225401168-010 R225401168-012 R225401168-014 R225401168-016 R225401168-018 R225401168-020 R225401168-022 R225401168-024 R225401168-026 R225401168-028 R225401648-000 R225401648-006

143. Assembly of the Door

A. General

This task gives you the assembly procedures of the component.

B. Job Set-up Information
(1) Consumable Materials

REFERENCE	DESIGNATION
08-007	Sealant, High Temperature

Table 7005
Consumable Materials

C. Procedure

WARNING: BE CAREFUL WHEN YOU USE SOLVENTS/CLEANING AGENTS, SEALANTS AND OTHER MATERIALS. OBEY THE MATERIAL MANUFACTURER'S INSTRUCTIONS AND THE LOCAL REGULATIONS. MAKE SURE THAT THERE IS A GOOD FLOW OF AIR THROUGH THE WORK AREA. DO NOT BREATHE THE FUMES. DO NOT SMOKE. DO NOT USE THESE MATERIALS NEAR A FLAME, SPARKS OR SOURCES OF HEAT. USE PROTECTIVE CLOTHING, GOGGLES AND GLOVES. IF YOU GET ONE OF THESE MATERIALS ON YOUR SKIN OR IN YOUR EYES, FLUSH IT AWAY WITH A FLOW OF CLEAN WATER. IF YOU GET ONE OF THESE MATERIALS IN YOUR MOUTH, GET IMMEDIATE MEDICAL AID. IN GENERAL, THESE MATERIALS ARE POISONOUS, FLAMMABLE AND SKIN IRRITANTS.

CAUTION: DO ALL THE WORK ON A CLEAN, SOFT SURFACE TO PREVENT DAMAGE TO THE COMPONENTS.

CAUTION: **MAKE SURE THAT ALL THE PARTS ARE CLEAN BEFORE YOU ASSEMBLE THEM.**

SUB TASK 25-41-51-440-138-A01

D2549010401400 D2549010514000 D2549010514400 D2549010602600 D2549010605200 D2549010607600 D2549010611200 D2549020604600 D2549020605400 D2549020609800 D2549020610000 D2549020611600 D2549020613000 D2549030404800 D2549030412400 R225401648-000 R225401648-006

1. Assembly of the Door (11D-1)

   (a) Attach the air outlets 11D-150 with the screws 11D-160.

   (b) Attach the latch assembly 11D-130 with the screws 11D-030 to the single door assembly 11D-001.

   NOTE: **For further instructions, see CMMV 25-41-60_80477 (latch assembly).**

   (c) Attach the threaded bolt 11D-110.

   (d) Assembly and Installation of the Lock Assy 11D-100

      1 Install the release system 11D-104 and the lock 11D-102.

      2 Install the slider pin to the lock 11D-102.

      3 Turn the folding door assy over, lift the flap above the lock 11D-102 and install the screws that install the release system 11D-104.

      4 Install the knob 11D-106 to the lock 11D-102 and the inside face of the folding door assy with a spanner.

   (e) Install the screws 11D-030.

   (f) Attach the sections 11D-060, 11D-070 with the screws 11D-050.

   (g) Assemble the hinge 11D-010 as follows:

      WARNING: **BE CAREFUL WHEN YOU USE MATERIAL NO. 08-007 SEALANT, HIGH TEMPERATURE. OBEY THE MATERIAL MANUFACTURER'S INSTRUCTIONS.**

      1 Apply the Material No. 08-007 Sealant, High Temperature to the setscrews 11D-020 and attach the setscrews 11D-020 to the hinge 11D-010.

(h) Attach the hinge 11D-010 with the screws 11D-030 and the washers 11D-040.

(i) Install and assemble the ashtray assemblies 11D-120 as follows:

1 Attach the screws 11D-050 to the ashtray case 11D-125.

2 Attach the ashtray cover 11D-123 to the ashtray case 11D-125.

(j) Attach the coat hook 11D-090 with the screw 11D-080.

SUB TASK 25-41-51-440-138-B01
D2549020512400 D2549020610200 D2549020610800 D2549020807400 D2549020809400 D2549030402200 D2549030405400 D2549030407200 D2549030507200 D2549030507400 D2549030508600 D2549030510200 D2549030600800 D2549030601600 D2549030603600 D2549030607800 D2549030612600 R225401168-000 R225401168-002 R225401168-004 R225401168-006 R225401168-008 R225401168-010 R225401168-012 R225401168-014 R225401168-016 R225401168-018 R225401168-020 R225401168-022 R225401168-024 R225401168-026 R225401168-028

2. Assembly of the Door (11D-1)

(a) Attach the air outlets 11D-150 with the screws 11D-160.

(b) Attach the latch assembly 11D-135 with the screws 11D-030 to the single door assembly 11D-001.

(c) Attach the threaded bolt 11D-110.

(d) Assembly and Installation of the Lock Assy 11D-100

1 Install the release system 11D-104 and the lock 11D-102.

2 Install the slider pin to the lock 11D-102.

3 Turn the folding door assy over, lift the flap above the lock 11D-102 and install the screws that install the release system 11D-104.

4 Install the knob 11D-106 to the lock 11D-102 and the inside face of the folding door assy with a spanner.

(e) Install the screws 11D-030.

(f) Attach the sections 11D-060, 11D-070 with the screws 11D-050.

(g) Assemble the hinge 11D-010 as follows:

WARNING: BE CAREFUL WHEN YOU USE MATERIAL NO. 08-007 SEALANT, HIGH TEMPERATURE. OBEY THE MATERIAL MANUFACTURER'S INSTRUCTIONS.

1 Apply the Material No. 08-007 Sealant, High Temperature to the setscrews 11D-020 and attach the setscrews 11D-020 to the hinge 11D-010.

(h) Attach the hinge 11D-010 with the screws 11D-030 and the washers 11D-040.

(i) Install and assemble the ashtray assemblies 11D-120 as follows:

1 Attach the screws 11D-050 to the ashtray case 11D-125.

2 Attach the ashtray cover 11D-123 to the ashtray case 11D-125.

(j) Attach the coat hook 11D-090 with the screw 11D-080.

TASK 25-41-51-400-815-F01

D2549010403200 D2549010404600 D2549010404800 D2549010512600 D2549010513800
D2549010514600 D2549010600200 D2549010601200 D2549010601800 D2549010603200
D2549010603800 D2549010604200 D2549010604400 D2549010604800 D2549010605000
D2549010606400 D2549010607200 D2549010607800 D2549010608800 D2549010609400
D2549010609600 D2549010610600 D2549010610800 D2549020403000 D2549020403400
D2549020412800 D2549020413600 D2549020507000 D2549020507200 D2549020508000
D2549020508200 D2549020508400 D2549020508600 D2549020512600 D2549020512800
D2549020513200 D2549020513400 D2549020613800 D2549020614800 D2549020701000
D2549020701400 D2549020702000 D2549020702400 D2549020703600 D2549020703800
D2549020705600 D2549020706600 D2549020706800 D2549020709000 D2549020709200
D2549020709400 D2549020710200 D2549020710400 D2549020710600 D2549020711200
D2549020712200 D2549020801000 D2549020807200 D2549030401200 D2549030402000
D2549030402400 D2549030402800 D2549030403400 D2549030403600 D2549030404400
D2549030404600 D2549030405200 D2549030406600 D2549030407800 D2549030409000
D2549030409200 D2549030409800 D2549030411600 D2549030414800 D2549030504200
D2549030507800 D2549030508000 D2549030509200 D2549030509400 D2549030510600
D2549030510800 D2549030511400 D2549030511800 D2549030512400 D2549030513000
D2549030513200 D2549030513400 D2549030513600 D2549030513800 D2549030514600
D2549030600400 D2549030601800 D2549030602800 D2549030603000 D2549030603800
D2549030604800 D2549030605600 D2549030607000 D2549030607200 D2549030607400
D2549030608600 D2549030608800 D2549030610600 D2549030611000 D2549030611200
D2549030612400 D2549030612800 D2549030613200 D2549030702200 D2549030702800
R225401134-008 R225401134-010 R225401134-012 R225401134-014 R225401134-016
R225401134-018 R225401134-020 R225401134-022 R225401134-024 R225401134-026
R225401134-028 R225401134-030 R225401134-032 R225401134-034 R225401134-036
R225401134-038 R225401136-000 R225401136-004 R225401136-006 R225401136-008
R225401136-010 R225401136-012 R225401136-014 R225401136-018 R225401136-020
R225401136-022 R225401136-024 R225401137-004 R225401137-006 R225401137-008
R225401137-014 R225401137-016 R225401145-002 R225401145-004 R225401145-006
R225401145-008 R225401145-010 R225401145-012 R225401145-014 R225401175-000
R225401175-002 R225401183-000 R225401183-002 R225401183-004 R225401183-006
R225401183-008 R225401600-000 R225401600-002 R225401600-004 R225401603-000
R225401685-000 R225401685-002 R225401811-000

144. Assembly of the Door

A. General

This task gives you the assembly procedures of the component.

B. Job Set-up Information
(1) Consumable Materials

REFERENCE	DESIGNATION
08-007	Sealant, High Temperature

Table 7006
Consumable Materials

C. Procedure

WARNING: **BE CAREFUL WHEN YOU USE SOLVENTS/CLEANING AGENTS, SEALANTS AND OTHER MATERIALS. OBEY THE MATERIAL MANUFACTURER'S INSTRUCTIONS AND THE LOCAL REGULATIONS. MAKE SURE THAT THERE IS A GOOD FLOW OF AIR THROUGH THE WORK AREA. DO NOT BREATHE THE FUMES. DO NOT SMOKE. DO NOT USE THESE MATERIALS NEAR A FLAME, SPARKS OR SOURCES OF HEAT. USE PROTECTIVE CLOTHING, GOGGLES AND GLOVES. IF YOU GET ONE OF THESE MATERIALS ON YOUR SKIN OR IN YOUR EYES, FLUSH IT AWAY WITH A FLOW OF CLEAN WATER. IF YOU GET ONE OF THESE MATERIALS IN YOUR MOUTH, GET IMMEDIATE MEDICAL AID. IN GENERAL, THESE MATERIALS ARE POISONOUS, FLAMMABLE AND SKIN IRRITANTS.**

CAUTION: **DO ALL THE WORK ON A CLEAN, SOFT SURFACE TO PREVENT DAMAGE TO THE COMPONENTS.**

CAUTION: **MAKE SURE THAT ALL THE PARTS ARE CLEAN BEFORE YOU ASSEMBLE THEM.**

SUB TASK 25-41-51-440-139-A01

D2549010512600 D2549010513800 D2549010514600 D2549010600200
D2549010601800 D2549010603800 D2549010604200 D2549010604400
D2549010605000 D2549010607200 D2549010608800 D2549010609600
D2549010610800 D2549020403000 D2549020403400 D2549020413600
D2549020507000 D2549020507200 D2549020508200 D2549020508400
D2549020508600 D2549020512800 D2549020513200 D2549020513400
D2549020613800 D2549020614800 D2549020701000 D2549020702000
D2549020702400 D2549020703600 D2549020703800 D2549020705600
D2549020706800 D2549020709200 D2549020709400 D2549020710200
D2549020710400 D2549020710600 D2549020711200 D2549020712200
D2549020801000 D2549020807200 D2549030401200 D2549030402000
D2549030402400 D2549030402800 D2549030403400 D2549030403600
D2549030404400 D2549030404600 D2549030405200 D2549030406600
D2549030407800 D2549030409000 D2549030409200 D2549030409800
D2549030411600 D2549030414800 D2549030504200 D2549030507800
D2549030508000 D2549030509200 D2549030509400 D2549030510600
D2549030510800 D2549030511400 D2549030511800 D2549030512400
D2549030513000 D2549030513200 D2549030513400 D2549030513600

D2549030513800 D2549030514600 D2549030600400 D2549030601800 D2549030602800 D2549030603000 D2549030603800 D2549030604800 D2549030605600 D2549030607000 D2549030607200 D2549030607400 D2549030608600 D2549030608800 D2549030610600 D2549030611000 D2549030611200 D2549030612400 D2549030612800 D2549030613200 D2549030702200 D2549030702800 R225401134-008 R225401134-010 R225401134-012 R225401134-014 R225401134-016 R225401134-018 R225401134-020 R225401134-022 R225401134-024 R225401134-026 R225401134-028 R225401134-030 R225401134-032 R225401134-034 R225401134-036 R225401134-038 R225401136-000 R225401136-004 R225401136-006 R225401136-008 R225401136-010 R225401136-012 R225401136-014 R225401136-018 R225401136-020 R225401136-022 R225401136-024 R225401137-004 R225401137-006 R225401137-008 R225401137-014 R225401137-016 R225401145-002 R225401145-004 R225401145-006 R225401145-008 R225401145-010 R225401145-012 R225401145-014 R225401175-000 R225401175-002 R225401600-000 R225401600-002 R225401600-004

1. Assembly of the Door (11E-1)

   (a) Attach the air outlets 11E-150 with the screws 11E-160.

   (b) Attach the latch assembly 11E-130 with the screws 11E-030 to the single door assembly 11E-001.

   NOTE: For further instructions, see CMMV 25-41-60_80477 (latch assembly).

   (c) Attach the threaded bolt 11E-110.

   (d) Assembly and Installation of the Lock Assy 11E-100

      1 Install the release system 11E-104 and the lock 11E-102.

      2 Install the slider pin to the lock 11E-102.

      3 Turn the folding door assy over, lift the flap above the lock 11E-102 and install the screws that install the release system 11E-104.

      4 Install the knob 11E-106 to the lock 11E-102 and the inside face of the folding door assy with a spanner.

   (e) Install the screws 11E-030.

   (f) Attach the sections 11E-060, 11E-070 with the screws 11E-050.

   (g) Assemble the hinge 11E-010 as follows:

WARNING: **BE CAREFUL WHEN YOU USE MATERIAL NO. 08-007 SEALANT, HIGH TEMPERATURE. OBEY THE MATERIAL MANUFACTURER'S INSTRUCTIONS.**

1 Apply the Material No. 08-007 Sealant, High Temperature to the setscrews 11E-020 and attach the setscrews 11E-020 to the hinge 11E-010.

(h) Attach the hinge 11E-010 with the screws 11E-030 and the washers 11E-040.

(i) Install and assemble the ashtray assemblies 11E-120 as follows:

1 Attach the screws 11E-050 to the ashtray case 11E-125.

2 Attach the ashtray cover 11E-123 to the ashtray case 11E-125.

(j) Attach the coat hook 11E-090 with the screw 11E-080.

SUB TASK 25-41-51-440-139-B01
D2549010403200 D2549010404600 D2549010404800 D2549010601200 D2549010603200 D2549010604800 D2549010606400 D2549010607800 D2549010609400 D2549010610600 D2549020412800 D2549020508000 D2549020512600 D2549020701400 D2549020706600 D2549020709000 R225401183-000 R225401183-002 R225401183-004 R225401183-006 R225401183-008 R225401603-000 R225401685-000 R225401685-002 R225401811-000

2. Assembly of the Door (11E-1)

(a) Attach the air outlets 11E-150 with the screws 11E-160.

(b) Attach the latch assembly 11E-135 with the screws 11E-030 to the single door assembly 11E-001.

(c) Attach the threaded bolt 11E-110.

(d) Assembly and Installation of the Lock Assy 11E-100

1 Install the release system 11E-104 and the lock 11E-102.

2 Install the slider pin to the lock 11E-102.

3 Turn the folding door assy over, lift the flap above the lock 11E-102 and install the screws that install the release system 11E-104.

4 Install the knob 11E-106 to the lock 11E-102 and the inside face of the folding door assy with a spanner.

(e) Install the screws 11E-030.

(f) Attach the sections 11E-060, 11E-070 with the screws 11E-050.

(g) Assemble the hinge 11E-010 as follows:

WARNING: BE CAREFUL WHEN YOU USE MATERIAL NO. 08-007 SEALANT, HIGH TEMPERATURE. OBEY THE MATERIAL MANUFACTURER'S INSTRUCTIONS.

1 Apply the Material No. 08-007 Sealant, High Temperature to the setscrews 11E-020 and attach the setscrews 11E-020 to the hinge 11E-010.

(h) Attach the hinge 11E-010 with the screws 11E-030 and the washers 11E-040.

(i) Install and assemble the ashtray assemblies 11E-120 as follows:

1 Attach the screws 11E-050 to the ashtray case 11E-125.

2 Attach the ashtray cover 11E-123 to the ashtray case 11E-125.

(j) Attach the coat hook 11E-090 with the screw 11E-080.

TASK 25-41-51-400-815-G01

D2549010403800 D2549010405000 D2549010405800 D2549010407000 D2549010514800 D2549010600400 D2549010600600 D2549010601400 D2549010602000 D2549010602200 D2549010602400 D2549010602800 D2549010604600 D2549010605600 D2549010611800 D2549020301000 D2549020400400 D2549020401200 D2549020402000 D2549020403600 D2549020404600 D2549020406800 D2549020410200 D2549020411400 D2549020413000 D2549020413400 D2549020414000 D2549020414200 D2549020507600 D2549020509000 D2549020509200 D2549020509600 D2549020510800 D2549020511200 D2549020514000 D2549020602200 D2549020612200 D2549020612400 D2549020614400 D2549020700000 D2549020700200 D2549020700400 D2549020700600 D2549020700800 D2549020704200 D2549020704400 D2549020705000 D2549020705400 D2549020706200 D2549020707000 D2549020707200 D2549020707400 D2549020708000 D2549020708200 D2549020708600 D2549020709600 D2549020711000 D2549020711600 D2549020713800 D2549020714400 D2549020800400 D2549020801600 D2549020807600 D2549020809600 D2549020810000 D2549020810400 D2549020810600 D2549020811200 D2549020811400 D2549020812200 D2549020813600 D2549030401000 D2549030403800 D2549030405800 D2549030406000 D2549030408600 D2549030409400 D2549030413000 D2549030508200 D2549030509600 D2549030509800 D2549030511000 D2549030511200 D2549030511600 D2549030512000 D2549030512200 D2549030512800 D2549030514000 D2549030514400 D2549030514800 D2549030600000 D2549030601200 D2549030602000 D2549030602400 D2549030602600 D2549030603400 D2549030604600 D2549030605000 D2549030605200 D2549030605400 D2549030606200 D2549030606400 D2549030607600 D2549030609200 D2549030610400 D2549030611400 D2549030611600 D2549030612200 D2549030613800 D2549030614600 D2549030700200 D2549030702400 D2549030702600 D2549040500600 D2549040500800 D2549040501000 D2549040501400 R225401142-002 R225401153-000 R225401172-000 R225401172-004 R225401172-006 R225401172-008 R225401172-010 R225401172-012 R225401172-014 R225401172-016 R225401172-018 R225401195-000 R225401199-006 R225401613-000 R225401643-002 R225401643-004 R225401643-006 R225401643-008 R225401646-000 R225401646-002 R225401647-000 R225401656-000 R225401656-002 R225401673-000 R225401673-002 R225401673-004 R225401673-006 R225401691-000 R225401691-002

145. Assembly of the Door

A. General

This task gives you the assembly procedures of the component.

B. Job Set-up Information

(1) Consumable Materials

REFERENCE	DESIGNATION
08-007	Sealant, High Temperature

Table 7007
Consumable Materials

C. Procedure

WARNING: **BE CAREFUL WHEN YOU USE SOLVENTS/CLEANING AGENTS, SEALANTS AND OTHER MATERIALS. OBEY THE MATERIAL MANUFACTURER'S INSTRUCTIONS AND THE LOCAL REGULATIONS. MAKE SURE THAT THERE IS A GOOD FLOW OF AIR THROUGH THE WORK AREA. DO NOT BREATHE THE FUMES. DO NOT SMOKE. DO NOT USE THESE MATERIALS NEAR A FLAME, SPARKS OR SOURCES OF HEAT. USE PROTECTIVE CLOTHING, GOGGLES AND GLOVES. IF YOU GET ONE OF THESE MATERIALS ON YOUR SKIN OR IN YOUR EYES, FLUSH IT AWAY WITH A FLOW OF CLEAN WATER. IF YOU GET ONE OF THESE MATERIALS IN YOUR MOUTH, GET IMMEDIATE MEDICAL AID. IN GENERAL, THESE MATERIALS ARE POISONOUS, FLAMMABLE AND SKIN IRRITANTS.**

CAUTION: **DO ALL THE WORK ON A CLEAN, SOFT SURFACE TO PREVENT DAMAGE TO THE COMPONENTS.**

CAUTION: **MAKE SURE THAT ALL THE PARTS ARE CLEAN BEFORE YOU ASSEMBLE THEM.**

SUB TASK 25-41-51-440-140-A01

D2549010514800 D2549010600400 D2549010600600 D2549010601400 D2549010602000 D2549010602200 D2549010602400 D2549010602800 D2549010604600 D2549020401200 D2549020410200 D2549020413400 D2549020414000 D2549020507600 D2549020509000 D2549020509200 D2549020511200 D2549020514000 D2549020612400 D2549020614400 D2549020700200 D2549020700800 D2549020707200 D2549020708200 D2549020708600 D2549020709600 D2549020711000 D2549020713800 D2549020714400 D2549020801600 D2549020809600 D2549020811200 D2549030401000 D2549030406000 D2549030509600 D2549030511000 D2549030511200 D2549030512000 D2549030512800 D2549030514000 D2549030514400 D2549030514800 D2549030601200 D2549030603400 D2549030605200 D2549030605400 D2549030607600 D2549030610400 D2549030611400 D2549030700200 D2549030702600 R225401153-000

1. Assembly of the Door (11F-1)

   (a) Attach the air outlets 11F-150 with the screws 11F-160.

(b) Attach the latch assembly 11F-130 with the screws 11F-030 to the single door assembly 11F-001.

NOTE: For further instructions, see CMMV 25-41-60_80477 (latch assembly).

(c) Attach the threaded bolt 11F-110.

(d) Assembly and Installation of the Lock Assy 11F-100

1 Install the release system 11F-104 and the lock 11F-102.

2 Install the slider pin to the lock 11F-102.

3 Turn the folding door assy over, lift the flap above the lock 11F-102 and install the screws that install the release system 11F-104.

4 Install the knob 11F-106 to the lock 11F-102 and the inside face of the folding door assy with a spanner.

(e) Install the screws 11F-030.

(f) Attach the sections 11F-060, 11F-070 with the screws 11F-050.

(g) Assemble the hinge 11F-010 as follows:

WARNING: BE CAREFUL WHEN YOU USE MATERIAL NO. 08-007 SEALANT, HIGH TEMPERATURE. OBEY THE MATERIAL MANUFACTURER'S INSTRUCTIONS.

1 Apply the Material No. 08-007 Sealant, High Temperature to the setscrews 11F-020 and attach the setscrews 11F-020 to the hinge 11F-010.

(h) Attach the hinge 11F-010 with the screws 11F-030 and the washers 11F-040.

(i) Install and assemble the ashtray assemblies 11F-120 as follows:

1 Attach the screws 11F-050 to the ashtray case 11F-125.

2 Attach the ashtray cover 11F-123 to the ashtray case 11F-125.

(j) Attach the coat hook 11F-090 with the screw 11F-080.

SUB TASK 25-41-51-440-140-B01
D2549010403800 D2549010405000 D2549010405800 D2549010407000
D2549010605600 D2549010611800 D2549020301000 D2549020400400

D2549020402000 D2549020403600 D2549020404600 D2549020406800 D2549020411400 D2549020413000 D2549020414200 D2549020509600 D2549020510800 D2549020602200 D2549020612200 D2549020700000 D2549020700400 D2549020700600 D2549020704200 D2549020704400 D2549020705000 D2549020705400 D2549020706200 D2549020707000 D2549020707400 D2549020708000 D2549020711600 D2549020800400 D2549020807600 D2549020810000 D2549020810400 D2549020810600 D2549020811400 D2549020812200 D2549020813600 D2549030403800 D2549030405800 D2549030408600 D2549030409400 D2549030413000 D2549030508200 D2549030509800 D2549030511600 D2549030512200 D2549030600000 D2549030602000 D2549030602400 D2549030602600 D2549030604600 D2549030605000 D2549030606200 D2549030606400 D2549030609200 D2549030611600 D2549030612200 D2549030613800 D2549030614600 D2549030702400 D2549040500600 D2549040500800 D2549040501000 D2549040501400 R225401142-002 R225401172-000 R225401172-004 R225401172-006 R225401172-008 R225401172-010 R225401172-012 R225401172-014 R225401172-016 R225401172-018 R225401195-000 R225401199-006 R225401613-000 R225401643-002 R225401643-004 R225401643-006 R225401643-008 R225401646-000 R225401646-002 R225401647-000 R225401656-000 R225401656-002 R225401673-000 R225401673-002 R225401673-004 R225401673-006 R225401691-000 R225401691-002

2. Assembly of the Door (11F-1)

   (a) Attach the air outlets 11F-150 with the screws 11F-160.

   (b) Attach the latch assembly 11F-135 with the screws 11F-030 to the single door assembly 11F-001.

   (c) Attach the threaded bolt 11F-110.

   (d) Assembly and Installation of the Lock Assy 11F-100

      1 Install the release system 11F-104 and the lock 11F-102.

      2 Install the slider pin to the lock 11F-102.

      3 Turn the folding door assy over, lift the flap above the lock 11F-102 and install the screws that install the release system 11F-104.

      4 Install the knob 11F-106 to the lock 11F-102 and the inside face of the folding door assy with a spanner.

   (e) Install the screws 11F-030.

   (f) Attach the sections 11F-060, 11F-070 with the screws 11F-050.

(g) Assemble the hinge 11F-010 as follows:

WARNING: BE CAREFUL WHEN YOU USE MATERIAL NO. 08-007 SEALANT, HIGH TEMPERATURE. OBEY THE MATERIAL MANUFACTURER'S INSTRUCTIONS.

1 Apply the Material No. 08-007 Sealant, High Temperature to the setscrews 11F-020 and attach the setscrews 11F-020 to the hinge 11F-010.

(h) Attach the hinge 11F-010 with the screws 11F-030 and the washers 11F-040.

(i) Install and assemble the ashtray assemblies 11F-120 as follows:

1 Attach the screws 11F-050 to the ashtray case 11F-125.

2 Attach the ashtray cover 11F-123 to the ashtray case 11F-125.

(j) Attach the coat hook 11F-090 with the screw 11F-080.

TASK 25-41-51-400-815-H01

D2549010404400 D2549010406200 D2549010600800 D2549010601600 D2549010603600
D2549010611000 D2549010614200 D2549020300400 D2549020302800 D2549020402600
D2549020405600 D2549020406200 D2549020406600 D2549020407000 D2549020407800
D2549020408000 D2549020409000 D2549020409200 D2549020409400 D2549020410400
D2549020411000 D2549020412000 D2549020412400 D2549020413200 D2549020507400
D2549020507800 D2549020508800 D2549020512000 D2549020512200 D2549020611800
D2549020701600 D2549020701800 D2549020702200 D2549020703400 D2549020704800
D2549020705200 D2549020708400 D2549020709800 D2549020710000 D2549020711400
D2549020712400 D2549020712800 D2549020713200 D2549020713400 D2549020714000
D2549020800600 D2549020800800 D2549020802800 D2549020803800 D2549020805800
D2549020806000 D2549020806200 D2549020807000 D2549020808600 D2549020808800
D2549020810200 D2549020811800 D2549020813800 D2549020814400 D2549030400200
D2549030408000 D2549030410400 D2549030411200 D2549030414400 D2549030503800
D2549030507600 D2549030508800 D2549030510400 D2549030514200 D2549030600600
D2549030605800 D2549030609800 D2549030614000 D2549030701000 D2549030703400
R225401115-000 R225401152-000 R225401152-002 R225401152-004 R225401152-006
R225401152-008 R225401152-010 R225401196-000 R225401196-002 R225401196-004
R225401196-006 R225401196-008 R225401196-010 R225401196-012 R225401196-014
R225401196-016 R225401196-018 R225401196-020 R225401196-022 R225401196-024
R225401196-034 R225401196-036 R225401196-038 R225401196-040 R225401196-042
R225401196-044 R225401196-046 R225401196-048 R225401196-050 R225401196-052
R225401196-054 R225401196-056 R225401196-058 R225401196-060 R225401196-062
R225401196-064 R225401196-066 R225401196-068 R225401196-070 R225401609-000
R225401662-000 R225401662-002

146. Assembly of the Door

A. General

This task gives you the assembly procedures of the component.

B. Job Set-up Information
(1) Consumable Materials

REFERENCE	DESIGNATION
08-007	Sealant, High Temperature

Table 7008
Consumable Materials

C. Procedure

WARNING: **BE CAREFUL WHEN YOU USE SOLVENTS/CLEANING AGENTS, SEALANTS AND OTHER MATERIALS. OBEY THE MATERIAL MANUFACTURER'S INSTRUCTIONS AND THE LOCAL REGULATIONS. MAKE SURE THAT THERE IS A GOOD FLOW OF AIR THROUGH THE WORK AREA. DO NOT BREATHE THE FUMES. DO NOT SMOKE. DO NOT USE THESE MATERIALS NEAR A FLAME, SPARKS OR SOURCES OF HEAT. USE PROTECTIVE CLOTHING, GOGGLES AND GLOVES. IF YOU GET ONE OF THESE MATERIALS ON YOUR SKIN OR IN YOUR EYES, FLUSH IT AWAY WITH A FLOW OF CLEAN WATER. IF YOU GET ONE OF THESE MATERIALS IN YOUR MOUTH, GET IMMEDIATE MEDICAL AID. IN GENERAL, THESE MATERIALS ARE POISONOUS, FLAMMABLE AND SKIN IRRITANTS.**

CAUTION: **DO ALL THE WORK ON A CLEAN, SOFT SURFACE TO PREVENT DAMAGE TO THE COMPONENTS.**

CAUTION: **MAKE SURE THAT ALL THE PARTS ARE CLEAN BEFORE YOU ASSEMBLE THEM.**

SUB TASK 25-41-51-440-141-A01

D2549010404400 D2549010406200 D2549010600800 D2549020302800 D2549020402600 D2549020406200 D2549020406600 D2549020407000 D2549020407800 D2549020408000 D2549020409000 D2549020409400 D2549020410400 D2549020411000 D2549020412000 D2549020412400 D2549020413200 D2549020508800 D2549020512000 D2549020611800 D2549020701600 D2549020702200 D2549020703400 D2549020705200 D2549020709800 D2549020710000 D2549020711400 D2549020713200 D2549020713400 D2549020714000 D2549020800600 D2549020802800 D2549020805800 D2549020806000 D2549020807000 D2549020808600 D2549020810200 D2549020811800 D2549020813800 D2549030400200 D2549030408000 D2549030410400 D2549030411200 D2549030414400 D2549030514200 D2549030600600 D2549030605800 D2549030609800 D2549030701000 D2549030703400 R225401152-000 R225401152-002 R225401152-004 R225401152-006 R225401152-008 R225401152-010 R225401196-000 R225401196-002 R225401196-004 R225401196-006 R225401196-008 R225401196-010 R225401196-012 R225401196-014 R225401196-016 R225401196-018 R225401196-020 R225401196-022 R225401196-024 R225401196-034 R225401196-036 R225401196-038 R225401196-040 R225401196-042 R225401196-044 R225401196-046 R225401196-048 R225401196-050 R225401196-052 R225401196-054 R225401196-056 R225401196-058 R225401196-060 R225401196-062 R225401196-064 R225401196-066 R225401196-068 R225401196-070 R225401609-000 R225401662-000 R225401662-002

1. Assembly of the Door (11G-1)

   (a) Attach the air outlets 11G-150 with the screws 11G-160.

(b) Attach the latch assembly 11G-130 with the screws 11G-030 to the single door assembly 11G-001.

(c) Attach the threaded bolt 11G-110.

(d) Assembly and Installation of the Lock Assy 11G-100

1 Install the release system 11G-104 and the lock 11G-102.

2 Install the slider pin to the lock 11G-102.

3 Turn the folding door assy over, lift the flap above the lock 11G-102 and install the screws that install the release system 11G-104.

4 Install the knob 11G-106 to the lock 11G-102 and the inside face of the folding door assy with a spanner.

(e) Install the screws 11G-030.

(f) Attach the sections 11G-060, 11G-070 with the screws 11G-050.

(g) Assemble the hinge 11G-010 as follows:

WARNING: BE CAREFUL WHEN YOU USE MATERIAL NO. 08-007 SEALANT, HIGH TEMPERATURE. OBEY THE MATERIAL MANUFACTURER'S INSTRUCTIONS.

1 Apply the Material No. 08-007 Sealant, High Temperature to the setscrews 11G-020 and attach the setscrews 11G-020 to the hinge 11G-010.

(h) Attach the hinge 11G-010 with the screws 11G-030 and the washers 11G-040.

(i) Install and assemble the ashtray assemblies 11G-120 as follows:

1 Attach the screws 11G-050 to the ashtray case 11G-125.

2 Attach the ashtray cover 11G-123 to the ashtray case 11G-125.

(j) Attach the coat hook 11G-090 with the screw 11G-080.

SUB TASK 25-41-51-440-141-B01

D2549010601600 D2549010603600 D2549010611000 D2549010614200
D2549020300400 D2549020405600 D2549020409200 D2549020507400
D2549020507800 D2549020512200 D2549020701800 D2549020704800
D2549020708400 D2549020712400 D2549020712800 D2549020800800
D2549020803800 D2549020806200 D2549020808800 D2549020814400

D2549030503800 D2549030507600 D2549030508800 D2549030510400
D2549030614000 R225401115-000

2. Assembly of the Door (11G-1)

(a) Attach the air outlets 11G-150 with the screws 11G-160.

(b) Attach the latch assembly 11G-135 with the screws 11G-030 to the single door assembly 11G-001.

NOTE: For further instructions, see CMMV 25-41-60_80477 (latch assembly).

(c) Attach the threaded bolt 11G-110.

(d) Assembly and Installation of the Lock Assy 11G-100

1 Install the release system 11G-104 and the lock 11G-102.

2 Install the slider pin to the lock 11G-102.

3 Turn the folding door assy over, lift the flap above the lock 11G-102 and install the screws that install the release system 11G-104.

4 Install the knob 11G-106 to the lock 11G-102 and the inside face of the folding door assy with a spanner.

(e) Install the screws 11G-030.

(f) Attach the sections 11G-060, 11G-070 with the screws 11G-050.

(g) Assemble the hinge 11G-010 as follows:

WARNING: BE CAREFUL WHEN YOU USE MATERIAL NO. 08-007 SEALANT, HIGH TEMPERATURE. OBEY THE MATERIAL MANUFACTURER'S INSTRUCTIONS.

1 Apply the Material No. 08-007 Sealant, High Temperature to the setscrews 11G-020 and attach the setscrews 11G-020 to the hinge 11G-010.

(h) Attach the hinge 11G-010 with the screws 11G-030 and the washers 11G-040.

(i) Install and assemble the ashtray assemblies 11G-120 as follows:

1 Attach the screws 11G-050 to the ashtray case 11G-125.

2 Attach the ashtray cover 11G-123 to the ashtray case 11G-125.

(j) Attach the coat hook 11G-090 with the screw 11G-080.

TASK 25-41-51-400-815-J01

D2549010401600 D2549010403000 D2549010403600 D2549010404200 D2549010406000 D2549010406800 D2549010606000 D2549010606200 D2549010606600 D2549010606800 D2549010607000 D2549010608200 D2549010608600 D2549010609200 D2549010609800 D2549010610200 D2549010610400 D2549010611400 D2549010612200 D2549010613000 D2549010614800 D2549020300600 D2549020302000 D2549020401400 D2549020401600 D2549020404200 D2549020404800 D2549020405000 D2549020408600 D2549020408800 D2549020409800 D2549020412600 D2549020502200 D2549020505600 D2549020511000 D2549020514800 D2549020710800 D2549020712000 D2549020712600 D2549020800200 D2549020801400 D2549020801800 D2549020802200 D2549020803400 D2549020804000 D2549020804200 D2549020804400 D2549020804800 D2549020805000 D2549020808200 D2549020809800 D2549020810800 D2549020814000 D2549020814200 D2549030400400 D2549030400600 D2549030402600 D2549030406400 D2549030406800 D2549030411400 D2549030604200 D2549030608000 D2549030611800 D2549030613400 D2549030700000 D2549030703800 D2549040501800 D2549040502000 R225401602-000 R225401614-000 R225401622-000 R225401622-002 R225401624-000 R225401627-000 R225401627-002 R225401648-002 R225401648-004 R225401648-008 R225401688-000 R225401697-000 R225401697-002 R225401803-000 R225401803-002

147. Assembly of the Door

A. General

This task gives you the assembly procedures of the component.

B. Job Set-up Information

(1) Consumable Materials

REFERENCE	DESIGNATION
08-007	Sealant, High Temperature

Table 7009
Consumable Materials

C. Procedure

WARNING: **BE CAREFUL WHEN YOU USE SOLVENTS/CLEANING AGENTS, SEALANTS AND OTHER MATERIALS. OBEY THE MATERIAL MANUFACTURER'S INSTRUCTIONS AND THE LOCAL REGULATIONS. MAKE SURE THAT THERE IS A GOOD FLOW OF AIR THROUGH THE WORK AREA. DO NOT BREATHE THE FUMES. DO NOT SMOKE. DO NOT USE THESE MATERIALS NEAR A FLAME, SPARKS OR SOURCES OF HEAT. USE PROTECTIVE CLOTHING, GOGGLES AND GLOVES. IF YOU GET ONE OF THESE MATERIALS ON YOUR SKIN OR IN YOUR EYES, FLUSH IT AWAY WITH A FLOW OF CLEAN WATER. IF YOU GET ONE OF THESE MATERIALS IN YOUR MOUTH, GET IMMEDIATE MEDICAL AID. IN GENERAL, THESE MATERIALS ARE POISONOUS, FLAMMABLE AND SKIN IRRITANTS.**

CAUTION: **DO ALL THE WORK ON A CLEAN, SOFT SURFACE TO PREVENT DAMAGE TO THE COMPONENTS.**

CAUTION: **MAKE SURE THAT ALL THE PARTS ARE CLEAN BEFORE YOU ASSEMBLE THEM.**

SUB TASK 25-41-51-440-142-A01

D2549010403000 D2549010403600 D2549010404200 D2549010406000 D2549010406800 D2549010606000 D2549010606200 D2549010606600 D2549010609200 D2549010610400 D2549010613000 D2549020300600 D2549020408600 D2549020409800 D2549020412600 D2549020502200 D2549020505600 D2549020511000 D2549020710800 D2549020712000 D2549020712600 D2549020800200 D2549020801400 D2549020804400 D2549020804800 D2549020810800 D2549030406400 D2549030411400 D2549030604200 D2549030700000 D2549030703800 D2549040501800 D2549040502000 R225401602-000 R225401622-000 R225401622-002 R225401648-002 R225401648-004 R225401648-008 R225401688-000 R225401697-000 R225401697-002 R225401803-000 R225401803-002

1. Assembly of the Door (11H-1)

   (a) Attach the air outlets 11H-150 with the screws 11H-160.

   (b) Attach the latch assembly 11H-130 with the screws 11H-030 to the single door assembly 11H-001.

   NOTE: **For further instructions, see CMMV 25-41-60_80477 (latch assembly).**

   (c) Attach the threaded bolt 11H-110.

   (d) Assembly and Installation of the Lock Assy 11H-100

      1 Install the release system 11H-104 and the lock 11H-102.

2 Install the slider pin to the lock 11H-102.

3 Turn the folding door assy over, lift the flap above the lock 11H-102 and install the screws that install the release system 11H-104.

4 Install the knob 11H-106 to the lock 11H-102 and the inside face of the folding door assy with a spanner.

(e) Install the screws 11H-030.

(f) Attach the sections 11H-060, 11H-070 with the screws 11H-050.

(g) Assemble the hinge 11H-010 as follows:

WARNING: BE CAREFUL WHEN YOU USE MATERIAL NO. 08-007 SEALANT, HIGH TEMPERATURE. OBEY THE MATERIAL MANUFACTURER'S INSTRUCTIONS.

1 Apply the Material No. 08-007 Sealant, High Temperature to the setscrews 11H-020 and attach the setscrews 11H-020 to the hinge 11H-010.

(h) Attach the hinge 11H-010 with the screws 11H-030 and the washers 11H-040.

(i) install and assemble the ashtray assemblies 11H-120 as follows:

1 Attach the screws 11H-050 to the ashtray case 11H-125.

2 Attach the ashtray cover 11H-123 to the ashtray case 11H-125.

(j) Attach the coat hook 11H-090 with the screw 11H-080.

SUB TASK 25-41-51-440-142-B01

D2549010401600 D2549010606800 D2549010607000 D2549010608200 D2549010608600 D2549010609800 D2549010610200 D2549010611400 D2549010612200 D2549010614800 D2549020302000 D2549020401400 D2549020401600 D2549020404200 D2549020404800 D2549020405000 D2549020408800 D2549020514800 D2549020801800 D2549020802200 D2549020803400 D2549020804000 D2549020804200 D2549020805000 D2549020808200 D2549020809800 D2549020814000 D2549020814200 D2549030400400 D2549030400600 D2549030402600 D2549030406800 D2549030608000 D2549030611800 D2549030613400 R225401614-000 R225401624-000 R225401627-000 R225401627-002

2. Assembly of the Door (11H-1)

(a) Attach the air outlets 11H-150 with the screws 11H-160.

(b) Attach the latch assembly 11H-135 with the screws 11H-030 to the single door assembly 11H-001.

(c) Attach the threaded bolt 11H-110.

(d) Assembly and Installation of the Lock Assy 11H-100

1 Install the release system 11H-104 and the lock 11H-102.

2 Install the slider pin to the lock 11H-102.

3 Turn the folding door assy over, lift the flap above the lock 11H-102 and install the screws that install the release system 11H-104.

4 Install the knob 11H-106 to the lock 11H-102 and the inside face of the folding door assy with a spanner.

(e) Install the screws 11H-030.

(f) Attach the sections 11H-060, 11H-070 with the screws 11H-050.

(g) Assemble the hinge 11H-010 as follows:

WARNING: BE CAREFUL WHEN YOU USE MATERIAL NO. 08-007 SEALANT, HIGH TEMPERATURE. OBEY THE MATERIAL MANUFACTURER'S INSTRUCTIONS.

1 Apply the Material No. 08-007 Sealant, High Temperature to the setscrews 11H-020 and attach the setscrews 11H-020 to the hinge 11H-010.

(h) Attach the hinge 11H-010 with the screws 11H-030 and the washers 11H-040.

(i) install and assemble the ashtray assemblies 11H-120 as follows:

1 Attach the screws 11H-050 to the ashtray case 11H-125.

2 Attach the ashtray cover 11H-123 to the ashtray case 11H-125.

(j) Attach the coat hook 11H-090 with the screw 11H-080.

TASK 25-41-51-400-815-K01

D2549010403400 D2549020403200 D2549020407400 D2549020509800 D2549020511800
D2549020513000 D2549020514200 D2549020514400 D2549020514600 D2549020705800
D2549020713000 D2549020713600 D2549020714600 D2549020801200 D2549020802400
D2549020803000 D2549020806400 D2549020806800 D2549020814800 D2549030401400
D2549030401600 D2549030403000 D2549030405000 D2549030405600 D2549030407000
D2549030407400 D2549030407600 D2549030412600 D2549030413200 D2549030413600
D2549030600200 D2549030606000 D2549030606800 D2549030608400 D2549030609000
D2549030610000 D2549030612000 D2549030614200 D2549030614400 D2549030700400
D2549030701400 D2549040500200 D2549040500400 D2549040501200 D2549040501600
R225401199-000 R225401199-002 R225401199-004 R225401199-008 R225401199-010
R225401199-012 R225401605-000 R225401605-002 R225401611-000 R225401611-006
R225401611-008 R225401611-010 R225401611-012 R225401611-014 R225401611-016
R225401611-018 R225401611-020 R225401618-000 R225401618-002 R225401619-000
R225401619-002 R225401625-000

148. Assembly of the Door

A. General

This task gives you the assembly procedures of the component.

B. Job Set-up Information
(1) Consumable Materials

REFERENCE	DESIGNATION
08-007	Sealant, High Temperature

Table 7010
Consumable Materials

C. Procedure

WARNING: BE CAREFUL WHEN YOU USE SOLVENTS/CLEANING AGENTS, SEALANTS AND OTHER MATERIALS. OBEY THE MATERIAL MANUFACTURER'S INSTRUCTIONS AND THE LOCAL REGULATIONS. MAKE SURE THAT THERE IS A GOOD FLOW OF AIR THROUGH THE WORK AREA. DO NOT BREATHE THE FUMES. DO NOT SMOKE. DO NOT USE THESE MATERIALS NEAR A FLAME, SPARKS OR SOURCES OF HEAT. USE PROTECTIVE CLOTHING, GOGGLES AND GLOVES. IF YOU GET ONE OF THESE MATERIALS ON YOUR SKIN OR IN YOUR EYES, FLUSH IT AWAY WITH A FLOW OF CLEAN WATER. IF YOU GET ONE OF THESE MATERIALS IN YOUR MOUTH, GET IMMEDIATE MEDICAL AID. IN GENERAL, THESE MATERIALS ARE POISONOUS, FLAMMABLE AND SKIN IRRITANTS.

CAUTION: **DO ALL THE WORK ON A CLEAN, SOFT SURFACE TO PREVENT DAMAGE TO THE COMPONENTS.**

CAUTION: **MAKE SURE THAT ALL THE PARTS ARE CLEAN BEFORE YOU ASSEMBLE THEM.**

SUB TASK 25-41-51-440-143-A01

D2549010403400 D2549020403200 D2549020407400 D2549020509800 D2549020511800 D2549020513000 D2549020514200 D2549020514400 D2549020514600 D2549020705800 D2549020713000 D2549020713600 D2549020714600 D2549020801200 D2549020802400 D2549020803000 D2549020806400 D2549020806800 D2549020814800 D2549030401400 D2549030401600 D2549030403000 D2549030405000 D2549030405600 D2549030407000 D2549030407400 D2549030407600 D2549030412600 D2549030413200 D2549030413600 D2549030600200 D2549030606000 D2549030606800 D2549030608400 D2549030609000 D2549030610000 D2549030612000 D2549030700400 D2549030701400 D2549040500200 D2549040500400 D2549040501200 D2549040501600 R225401199-000 R225401199-002 R225401199-004 R225401199-008 R225401199-010 R225401199-012 R225401605-002 R225401611-000 R225401611-006 R225401611-008 R225401611-010 R225401611-012 R225401611-014 R225401611-016 R225401611-018 R225401611-020 R225401618-000 R225401618-002 R225401619-000 R225401619-002

1. Assembly of the Door (11J-1)

   (a) Attach the air outlets 11J-150 with the screws 11J-160.

   (b) Attach the latch assembly 11J-130 with the screws 11J-033 to the single door assembly 11J-001.

   (c) Attach the threaded bolt 11J-110.

   (d) Assembly and Installation of the Lock Assy 11J-100

      1 Install the release system 11J-104 and the lock 11J-102.

      2 Install the slider pin to the lock 11J-102.

      3 Turn the folding door assy over, lift the flap above the lock 11J-102 and install the screws that install the release system 11J-104.

      4 Install the knob 11J-106 to the lock 11J-102 and the inside face of the folding door assy with a spanner.

   (e) Install the screws 11J-030.

(f) Attach the sections 11J-060, 11J-070 with the screws 11J-050.

(g) Assemble the hinge 11J-010 as follows:

WARNING: BE CAREFUL WHEN YOU USE MATERIAL NO. 08-007 SEALANT, HIGH TEMPERATURE. OBEY THE MATERIAL MANUFACTURER'S INSTRUCTIONS.

1 Apply the Material No. 08-007 Sealant, High Temperature to the setscrews 11J-020 and attach the setscrews 11J-020 to the hinge 11J-010.

(h) Attach the hinge 11J-010 with the screws 11J-030 and the washers 11J-040.

(i) Install and assemble the ashtray assemblies 11J-120 as follows:

1 Attach the screws 11J-050 to the ashtray case 11J-125.

2 Attach the ashtray cover 11J-123 to the ashtray case 11J-125.

(j) Attach the coat hook 11J-090 with the screw 11J-080.

SUB TASK 25-41-51-440-143-B01
D2549030614200 D2549030614400 R225401625-000

2. Assembly of the Door (11J-1)

(a) Attach the air outlets 11J-150 with the screws 11J-160.

(b) Attach the latch assembly 11J-135 with the screws 11J-035 to the single door assembly 11J-001.

NOTE: For further instructions, see CMMV 25-41-60_80477 (latch assembly).

(c) Attach the threaded bolt 11J-110.

(d) Assembly and Installation of the Lock Assy 11J-100

1 Install the release system 11J-104 and the lock 11J-102.

2 Install the slider pin to the lock 11J-102.

3 Turn the folding door assy over, lift the flap above the lock 11J-102 and install the screws that install the release system 11J-104.

4 Install the knob 11J-106 to the lock 11J-102 and the inside face of the folding door assy with a spanner.

(e) Install the screws 11J-030.

(f) Attach the sections 11J-060, 11J-070 with the screws 11J-050.

(g) Assemble the hinge 11J-010 as follows:

WARNING: BE CAREFUL WHEN YOU USE MATERIAL NO. 08-007 SEALANT, HIGH TEMPERATURE. OBEY THE MATERIAL MANUFACTURER'S INSTRUCTIONS.

1 Apply the Material No. 08-007 Sealant, High Temperature to the setscrews 11J-020 and attach the setscrews 11J-020 to the hinge 11J-010.

(h) Attach the hinge 11J-010 with the screws 11J-030 and the washers 11J-040.

(i) Install and assemble the ashtray assemblies 11J-120 as follows:

1 Attach the screws 11J-050 to the ashtray case 11J-125.

2 Attach the ashtray cover 11J-123 to the ashtray case 11J-125.

(j) Attach the coat hook 11J-090 with the screw 11J-080.

TASK 25-41-51-400-815-L01

D2549010400200 D2549010400600 D2549010401000 D2549010401800 D2549010404000 D2549010612600 D2549010613200 D2549010613400 D2549010614400 D2549020301800 D2549020400600 D2549020401000 D2549020402200 D2549020402400 D2549020404400 D2549020405200 D2549020405400 D2549020405800 D2549020406400 D2549020407200 D2549020407600 D2549020510400 D2549020510600 D2549020803200 D2549020803600 D2549020805200 D2549020805400 D2549020806600 D2549020809000 D2549020811600 D2549020812000 D2549020812400 D2549020812800 D2549020813000 D2549020814600 D2549030404000 D2549030404200 D2549030410800 D2549030411800 D2549030412000 D2549030414200 D2549030613600 D2549030614800 D2549030701600 D2549030703600 D2549030704000 R225401639-000 R225401639-002 R225401649-000 R225401683-000 R225401693-000

149. Assembly of the Door

A. General

This task gives you the assembly procedures of the component.

B. Job Set-up Information

(1) Consumable Materials

REFERENCE	DESIGNATION
08-007	Sealant, High Temperature

Table 7011
Consumable Materials

C. Procedure

WARNING: BE CAREFUL WHEN YOU USE SOLVENTS/CLEANING AGENTS, SEALANTS AND OTHER MATERIALS. OBEY THE MATERIAL MANUFACTURER'S INSTRUCTIONS AND THE LOCAL REGULATIONS. MAKE SURE THAT THERE IS A GOOD FLOW OF AIR THROUGH THE WORK AREA. DO NOT BREATHE THE FUMES. DO NOT SMOKE. DO NOT USE THESE MATERIALS NEAR A FLAME, SPARKS OR SOURCES OF HEAT. USE PROTECTIVE CLOTHING, GOGGLES AND GLOVES. IF YOU GET ONE OF THESE MATERIALS ON YOUR SKIN OR IN YOUR EYES, FLUSH IT AWAY WITH A FLOW OF CLEAN WATER. IF YOU GET ONE OF THESE MATERIALS IN YOUR MOUTH, GET IMMEDIATE MEDICAL AID. IN GENERAL, THESE MATERIALS ARE POISONOUS, FLAMMABLE AND SKIN IRRITANTS.

CAUTION: DO ALL THE WORK ON A CLEAN, SOFT SURFACE TO PREVENT DAMAGE TO THE COMPONENTS.

CAUTION: **MAKE SURE THAT ALL THE PARTS ARE CLEAN BEFORE YOU ASSEMBLE THEM.**

SUB TASK 25-41-51-440-144-A01

D2549010401800 D2549010404000 D2549010613200 D2549010614400
D2549020402200 D2549020402400 D2549020405800 D2549020407200
D2549020407600 D2549020510400 D2549020510600 D2549020803600
D2549020805200 D2549020805400 D2549020813000 D2549030404000
D2549030410800 D2549030411800 D2549030412000 D2549030414200
D2549030613600 D2549030614800 D2549030701600 D2549030703600
D2549030704000 R225401683-000

1. Assembly of the Door (11K-1)

   (a) Attach the air outlets 11K-150 with the screws 11K-160.

   (b) Attach the latch assembly 11K-130 with the screws 11K-030 to the single door assembly 11K-001.

   NOTE: **For further instructions, see CMMV 25-41-60_80477 (latch assembly).**

   (c) Attach the threaded bolt 11K-110.

   (d) Assembly and Installation of the Lock Assy 11K-100

      1 Install the release system 11K-104 and the lock 11K-102.

      2 Install the slider pin to the lock 11K-102.

      3 Turn the folding door assy over, lift the flap above the lock 11K-102 and install the screws that install the release system 11K-104.

      4 Install the knob 11K-106 to the lock 11K-102 and the inside face of the folding door assy with a spanner.

   (e) Install the screws 11K-030.

   (f) Attach the sections 11K-060, 11K-070 with the screws 11K-050.

   (g) Assemble the hinge 11K-010 as follows:

WARNING: **BE CAREFUL WHEN YOU USE MATERIAL NO. 08-007 SEALANT, HIGH TEMPERATURE. OBEY THE MATERIAL MANUFACTURER'S INSTRUCTIONS.**

1 Apply the Material No. 08-007 Sealant, High Temperature to the setscrews 11K-020 and attach the setscrews 11K-020 to the hinge 11K-010.

(h) Attach the hinge 11K-010 with the screws 11K-030 and the washers 11K-040.

(i) Install and assemble the ashtray assemblies 11K-120 as follows:

1 Attach the screws 11K-050 to the ashtray case 11K-125.

2 Attach the ashtray cover 11K-123 to the ashtray case 11K-125.

(j) Attach the coat hook 11K-090 with the screw 11K-080.

SUB TASK 25-41-51-440-144-B01

D2549010400200 D2549010400600 D2549010401000 D2549010612600 D2549010613400 D2549020301800 D2549020400600 D2549020401000 D2549020404400 D2549020405200 D2549020405400 D2549020406400 D2549020803200 D2549020806600 D2549020809000 D2549020811600 D2549020812000 D2549020812400 D2549020812800 D2549020814600 D2549030404200 R225401639-000 R225401639-002 R225401649-000 R225401693-000

2. Assembly of the Door (11K-1)

(a) Attach the air outlets 11K-150 with the screws 11K-160.

(b) Attach the latch assembly 11K-135 with the screws 11K-030 to the single door assembly 11K-001.

(c) Attach the threaded bolt 11K-110.

(d) Assembly and Installation of the Lock Assy 11K-100

1 Install the release system 11K-104 and the lock 11K-102.

2 Install the slider pin to the lock 11K-102.

3 Turn the folding door assy over, lift the flap above the lock 11K-102 and install the screws that install the release system 11K-104.

4 Install the knob 11K-106 to the lock 11K-102 and the inside face of the folding door assy with a spanner.

(e) Install the screws 11K-030.

(f) Attach the sections 11K-060, 11K-070 with the screws 11K-050.

(g) Assemble the hinge 11K-010 as follows:

WARNING: BE CAREFUL WHEN YOU USE MATERIAL NO. 08-007 SEALANT, HIGH TEMPERATURE. OBEY THE MATERIAL MANUFACTURER'S INSTRUCTIONS.

1 Apply the Material No. 08-007 Sealant, High Temperature to the setscrews 11K-020 and attach the setscrews 11K-020 to the hinge 11K-010.

(h) Attach the hinge 11K-010 with the screws 11K-030 and the washers 11K-040.

(i) Install and assemble the ashtray assemblies 11K-120 as follows:

1 Attach the screws 11K-050 to the ashtray case 11K-125.

2 Attach the ashtray cover 11K-123 to the ashtray case 11K-125.

(j) Attach the coat hook 11K-090 with the screw 11K-080.

TASK 25-41-51-400-815-M01
D2549010400400 D2549010612400 D2549030400000 D2549030401800 D2549030414600 D2549030603200 D2549030705600

150. Assembly of the Door

A. General

This task gives you the assembly procedures of the component.

B. Job Set-up Information
(1) Consumable Materials

REFERENCE	DESIGNATION
08-007	Sealant, High Temperature

Table 7012
Consumable Materials

C. Procedure

WARNING: BE CAREFUL WHEN YOU USE SOLVENTS/CLEANING AGENTS, SEALANTS AND OTHER MATERIALS. OBEY THE MATERIAL MANUFACTURER'S INSTRUCTIONS AND THE LOCAL REGULATIONS. MAKE SURE THAT THERE IS A GOOD FLOW OF AIR THROUGH THE WORK AREA. DO NOT BREATHE THE FUMES. DO NOT SMOKE. DO NOT USE THESE MATERIALS NEAR A FLAME, SPARKS OR SOURCES OF HEAT. USE PROTECTIVE CLOTHING, GOGGLES AND GLOVES. IF YOU GET ONE OF THESE MATERIALS ON YOUR SKIN OR IN YOUR EYES, FLUSH IT AWAY WITH A FLOW OF CLEAN WATER. IF YOU GET ONE OF THESE MATERIALS IN YOUR MOUTH, GET IMMEDIATE MEDICAL AID. IN GENERAL, THESE MATERIALS ARE POISONOUS, FLAMMABLE AND SKIN IRRITANTS.

CAUTION: DO ALL THE WORK ON A CLEAN, SOFT SURFACE TO PREVENT DAMAGE TO THE COMPONENTS.

CAUTION: MAKE SURE THAT ALL THE PARTS ARE CLEAN BEFORE YOU ASSEMBLE THEM.

SUB TASK 25-41-51-440-145-A01
D2549010400400 D2549010612400 D2549030400000 D2549030401800 D2549030603200

1. Assembly of the Door (11L-1)

(a) Attach the air outlets 11L-170 with the screws 11L-180.

(b) Attach the latch assembly 11L-150 with the screws 11L-030 to the single door assembly 11L-001.

NOTE: For further instructions, see CMMV 25-41-60_80477 (latch assembly).

(c) Attach the threaded bolt 11L-110.

(d) Assembly and Installation of the Lock Assy 11L-100

1 Install the release system 11L-104 and the lock 11L-102.

2 Install the slider pin to the lock 11L-102.

3 Turn the folding door assy over, lift the flap above the lock 11L-102 and install the screws that install the release system 11L-104.

4 Install the knob 11L-106 to the lock 11L-102 and the inside face of the folding door assy with a spanner.

(e) Install the screws 11L-030.

(f) Attach the sections 11L-060, 11L-070 with the screws 11L-050.

(g) Assemble the hinge 11L-010 as follows:

WARNING: BE CAREFUL WHEN YOU USE MATERIAL NO. 08-007 SEALANT, HIGH TEMPERATURE. OBEY THE MATERIAL MANUFACTURER'S INSTRUCTIONS.

1 Apply the Material No. 08-007 Sealant, High Temperature to the setscrews 11L-020 and attach the setscrews 11L-020 to the hinge 11L-010.

(h) Attach the hinge 11L-010 with the screws 11L-030 and the washers 11L-040.

(i) Install and assemble the ashtray assemblies 11L-120 as follows:

1 Attach the screws 11L-050 to the ashtray case 11L-140.

2 Attach the ashtray cover 11L-130 to the ashtray case 11L-140.

(j) Attach the coat hook 11L-090 with the screw 11L-080.

SUB TASK 25-41-51-440-145-B01
D2549030414600 D2549030705600

2. Assembly of the Door (11L-1)

(a) Attach the air outlets 11L-170 with the screws 11L-180.

(b) Attach the latch assembly 11L-155 with the screws 11L-030 to the single door assembly 11L-001.

(c) Attach the threaded bolt 11L-110.

(d) Assembly and Installation of the Lock Assy 11L-100

1 Install the release system 11L-104 and the lock 11L-102.

2 Install the slider pin to the lock 11L-102.

3 Turn the folding door assy over, lift the flap above the lock 11L-102 and install the screws that install the release system 11L-104.

4 Install the knob 11L-106 to the lock 11L-102 and the inside face of the folding door assy with a spanner.

(e) Install the screws 11L-030.

(f) Attach the sections 11L-060, 11L-070 with the screws 11L-050.

(g) Assemble the hinge 11L-010 as follows:

WARNING: BE CAREFUL WHEN YOU USE MATERIAL NO. 08-007 SEALANT, HIGH TEMPERATURE. OBEY THE MATERIAL MANUFACTURER'S INSTRUCTIONS.

1 Apply the Material No. 08-007 Sealant, High Temperature to the setscrews 11L-020 and attach the setscrews 11L-020 to the hinge 11L-010.

(h) Attach the hinge 11L-010 with the screws 11L-030 and the washers 11L-040.

(i) Install and assemble the ashtray assemblies 11L-120 as follows:

1 Attach the screws 11L-050 to the ashtray case 11L-140.

2 Attach the ashtray cover 11L-130 to the ashtray case 11L-140.

(j) Attach the coat hook 11L-090 with the screw 11L-080.

TASK 25-41-51-400-815-N01

D2547160900200 D2547160900400 D2549010402400 D2549010405200 D2549010405400 D2549010406400 D2549020300000 D2549020400800 D2549020406000 D2549020408200 D2549020410800 D2549020414600 D2549020414800 D2549020513800 D2549020813200 D2549020813400 D2549030408200 D2549030408400 D2549030409600 D2549030410000 D2549030410200 D2549030412200 D2549030412800 D2549030413400 D2549030414000 D2549030700600 D2549030704200 D2549030704400 D2549030704800 D2549030705200 R225401671-000 R225401671-002 R225401675-000 R225401689-004 R225401689-006

151. Assembly of the Door

A. General

This task gives you the assembly procedures of the component.

B. Job Set-up Information

(1) Consumable Materials

REFERENCE	DESIGNATION
08-007	Sealant, High Temperature

Table 7013
Consumable Materials

C. Procedure

WARNING: **BE CAREFUL WHEN YOU USE SOLVENTS/CLEANING AGENTS, SEALANTS AND OTHER MATERIALS. OBEY THE MATERIAL MANUFACTURER'S INSTRUCTIONS AND THE LOCAL REGULATIONS. MAKE SURE THAT THERE IS A GOOD FLOW OF AIR THROUGH THE WORK AREA. DO NOT BREATHE THE FUMES. DO NOT SMOKE. DO NOT USE THESE MATERIALS NEAR A FLAME, SPARKS OR SOURCES OF HEAT. USE PROTECTIVE CLOTHING, GOGGLES AND GLOVES. IF YOU GET ONE OF THESE MATERIALS ON YOUR SKIN OR IN YOUR EYES, FLUSH IT AWAY WITH A FLOW OF CLEAN WATER. IF YOU GET ONE OF THESE MATERIALS IN YOUR MOUTH, GET IMMEDIATE MEDICAL AID. IN GENERAL, THESE MATERIALS ARE POISONOUS, FLAMMABLE AND SKIN IRRITANTS.**

CAUTION: **DO ALL THE WORK ON A CLEAN, SOFT SURFACE TO PREVENT DAMAGE TO THE COMPONENTS.**

CAUTION: **MAKE SURE THAT ALL THE PARTS ARE CLEAN BEFORE YOU ASSEMBLE THEM.**

SUB TASK 25-41-51-440-146-A01

D2547160900200 D2547160900400 D2549010402400 D2549010405200
D2549010406400 D2549020408200 D2549020410800 D2549020414600
D2549020513800 D2549020813400 D2549030408200 D2549030408400
D2549030412200 D2549030412800 D2549030413400 D2549030704200
D2549030704400 D2549030705200 R225401689-004 R225401689-006

1. Assembly of the Door (11M-1)

   (a) Attach the air outlets 11M-170 with the screws 11M-180.

   (b) Attach the latch assembly 11M-150 with the screws 11M-030 to the single door assembly 11M-001.

   (c) Attach the threaded bolt 11M-110.

   (d) Assembly and Installation of the Lock Assy 11M-100

      1 Install the release system 11M-104 and the lock 11M-102.

      2 Install the slider pin to the lock 11M-102.

      3 Turn the folding door assy over, lift the flap above the lock 11M-102 and install the screws that install the release system 11M-104.

      4 Install the knob 11M-106 to the lock 11M-102 and the inside face of the folding door assy with a spanner.

   (e) Install the screws 11M-030.

   (f) Attach the sections 11M-060, 11M-070 with the screws 11M-050.

   (g) Assemble the hinge 11M-010 as follows:

      WARNING: BE CAREFUL WHEN YOU USE MATERIAL NO. 08-007 SEALANT, HIGH TEMPERATURE. OBEY THE MATERIAL MANUFACTURER'S INSTRUCTIONS.

      1 Apply the Material No. 08-007 Sealant, High Temperature to the setscrews 11M-020 and attach the setscrews 11M-020 to the hinge 11M-010.

   (h) Attach the hinge 11M-010 with the screws 11M-030 and the washers 11M-040.

   (i) Install and assemble the ashtray assemblies 11M-120 as follows:

1 Attach the screws 11M-050 to the ashtray case 11M-140.

2 Attach the ashtray cover 11M-130 to the ashtray case 11M-140.

(j) Attach the coat hook 11M-090 with the screw 11M-080.

SUB TASK 25-41-51-440-146-B01
D2549010405400 D2549020300000 D2549020400800 D2549020406000 D2549020414800 D2549020813200 D2549030409600 D2549030410000 D2549030410200 D2549030414000 D2549030700600 D2549030704800 R225401671-000 R225401671-002 R225401675-000

2. Assembly of the Door (11M-1)

(a) Attach the air outlets 11M-170 with the screws 11M-180.

(b) Attach the latch assembly 11M-155 with the screws 11M-030 to the single door assembly 11M-001.

NOTE: For further instructions, see CMMV 25-41-60_80477 (latch assembly).

(c) Attach the threaded bolt 11M-110.

(d) Assembly and Installation of the Lock Assy 11M-100

1 Install the release system 11M-104 and the lock 11M-102.

2 Install the slider pin to the lock 11M-102.

3 Turn the folding door assy over, lift the flap above the lock 11M-102 and install the screws that install the release system 11M-104.

4 Install the knob 11M-106 to the lock 11M-102 and the inside face of the folding door assy with a spanner.

(e) Install the screws 11M-030.

(f) Attach the sections 11M-060, 11M-070 with the screws 11M-050.

(g) Assemble the hinge 11M-010 as follows:

WARNING: **BE CAREFUL WHEN YOU USE MATERIAL NO. 08-007 SEALANT, HIGH TEMPERATURE. OBEY THE MATERIAL MANUFACTURER'S INSTRUCTIONS.**

1 Apply the Material No. 08-007 Sealant, High Temperature to the setscrews 11M-020 and attach the setscrews 11M-020 to the hinge 11M-010.

(h) Attach the hinge 11M-010 with the screws 11M-030 and the washers 11M-040.

(i) Install and assemble the ashtray assemblies 11M-120 as follows:

1 Attach the screws 11M-050 to the ashtray case 11M-140.

2 Attach the ashtray cover 11M-130 to the ashtray case 11M-140.

(j) Attach the coat hook 11M-090 with the screw 11M-080.

TASK 25-41-51-400-815-P01

D2549010400000 D2549010400800 D2549010402000 D2549010402600 D2549010402800 D2549010513200 D2549010514200 D2549010601000 D2549010603000 D2549010603400 D2549010604000 D2549010605800 D2549010607400 D2549010608400 D2549010609000 D2549010610000 D2549010611600 D2549010612000 D2549010613800 D2549010614600 D2549020400200 D2549020403800 D2549020506600 D2549020510000 D2549020511600 D2549020606000 D2549020608800 D2549020609200 D2549020612000 D2549020702800 D2549020704600 D2549020706000 D2549020706400 D2549020707600 D2549020707800 D2549020708800 D2549020800000 D2549020802000 D2549020802600 D2549020805600 D2549020807800 D2549020808400 D2549020812600 D2549030506000 D2549030508400 D2549030510000 D2549030601000 D2549030601400 D2549030602200 D2549030604400 D2549030606600 D2549030608200 R225401160-000 R225401160-002 R225401192-000 R225401192-002 R225401629-000 R225401629-002 R225401643-000 R225401658-000

152. Assembly of the Door

A. General

This task gives you the assembly procedures of the component.

B. Job Set-up Information
(1) Consumable Materials

REFERENCE	DESIGNATION
08-007	Sealant, High Temperature

Table 7014
Consumable Materials

C. Procedure

WARNING: **BE CAREFUL WHEN YOU USE SOLVENTS/CLEANING AGENTS, SEALANTS AND OTHER MATERIALS. OBEY THE MATERIAL MANUFACTURER'S INSTRUCTIONS AND THE LOCAL REGULATIONS. MAKE SURE THAT THERE IS A GOOD FLOW OF AIR THROUGH THE WORK AREA. DO NOT BREATHE THE FUMES. DO NOT SMOKE. DO NOT USE THESE MATERIALS NEAR A FLAME, SPARKS OR SOURCES OF HEAT. USE PROTECTIVE CLOTHING, GOGGLES AND GLOVES. IF YOU GET ONE OF THESE MATERIALS ON YOUR SKIN OR IN YOUR EYES, FLUSH IT AWAY WITH A FLOW OF CLEAN WATER. IF YOU GET ONE OF THESE MATERIALS IN YOUR MOUTH, GET IMMEDIATE MEDICAL AID. IN GENERAL, THESE MATERIALS ARE POISONOUS, FLAMMABLE AND SKIN IRRITANTS.**

CAUTION: **DO ALL THE WORK ON A CLEAN, SOFT SURFACE TO PREVENT DAMAGE TO THE COMPONENTS.**

CAUTION: **MAKE SURE THAT ALL THE PARTS ARE CLEAN BEFORE YOU ASSEMBLE THEM.**

SUB TASK 25-41-51-440-147-A01

D2549010400800 D2549010402000 D2549010402800 D2549010603000 D2549010603400 D2549010605800 D2549010607400 D2549010608400 D2549010609000 D2549010611600 D2549010612000 D2549010613800 D2549010614600 D2549020400200 D2549020403800 D2549020510000 D2549020511600 D2549020609200 D2549020612000 D2549020702800 D2549020704600 D2549020706000 D2549020707600 D2549020707800 D2549020708800 D2549020802000 D2549020802600 D2549020805600 D2549020807800 D2549020808400 D2549020812600 D2549030506000 D2549030508400 D2549030510000 D2549030601000 D2549030601400 D2549030602200 D2549030604400 D2549030606600 D2549030608200 R225401160-000 R225401160-002 R225401192-000 R225401192-002 R225401629-000 R225401629-002 R225401643-000 R225401658-000

1. Assembly of the Door (11N-1)

   (a) Attach the air outlets 11N-170 with the screws 11N-180.

   (b) Attach the latch assembly 11N-150 with the screws 11N-030 to the single door assembly 11N-001.

   (c) Attach the threaded bolt 11N-110.

   (d) Assembly and Installation of the Lock Assy 11N-100

      1 Install the release system 11N-104 and the lock 11N-102.

      2 Install the slider pin to the lock 11N-102.

      3 Turn the folding door assy over, lift the flap above the lock 11N-102 and install the screws that install the release system 11N-104.

      4 Install the knob 11N-106 to the lock 11N-102 and the inside face of the folding door assy with a spanner.

   (e) Install the screws 11N-030.

   (f) Attach the sections 11N-060, 11N-070 with the screws 11N-050.

   (g) Assemble the hinge 11N-010 as follows:

WARNING: **BE CAREFUL WHEN YOU USE MATERIAL NO. 08-007 SEALANT, HIGH TEMPERATURE. OBEY THE MATERIAL MANUFACTURER'S INSTRUCTIONS.**

1 Apply the Material No. 08-007 Sealant, High Temperature to the setscrews 11N-020 and attach the setscrews 11N-020 to the hinge 11N-010.

(h) Attach the hinge 11N-010 with the screws 11N-030 and the washers 11N-040.

(i) Install and assemble the ashtray assemblies 11N-120 as follows:

1 Attach the screws 11N-050 to the ashtray case 11N-140.

2 Attach the ashtray cover 11N-130 to the ashtray case 11N-140.

(j) Attach the coat hook 11N-090 with the screw 11N-080.

SUB TASK 25-41-51-440-147-B01
D2549010400000 D2549010402600 D2549010513200 D2549010514200
D2549010601000 D2549010604000 D2549010610000 D2549020506600
D2549020606000 D2549020608800 D2549020706400 D2549020800000

2. Assembly of the Door (11N-1)

(a) Attach the air outlets 11N-170 with the screws 11N-180.

(b) Attach the latch assembly 11N-155 with the screws 11N-030 to the single door assembly 11N-001.

NOTE: **For further instructions, see CMMV 25-41-60_80477 (latch assembly).**

(c) Attach the threaded bolt 11N-110.

(d) Assembly and Installation of the Lock Assy 11N-100

1 Install the release system 11N-104 and the lock 11N-102.

2 Install the slider pin to the lock 11N-102.

3 Turn the folding door assy over, lift the flap above the lock 11N-102 and install the screws that install the release system 11N-104.

4 Install the knob 11N-106 to the lock 11N-102 and the inside face of the folding door assy with a spanner.

(e) Install the screws 11N-030.

(f) Attach the sections 11N-060, 11N-070 with the screws 11N-050.

(g) Assemble the hinge 11N-010 as follows:

WARNING: BE CAREFUL WHEN YOU USE MATERIAL NO. 08-007 SEALANT, HIGH TEMPERATURE. OBEY THE MATERIAL MANUFACTURER'S INSTRUCTIONS.

1 Apply the Material No. 08-007 Sealant, High Temperature to the setscrews 11N-020 and attach the setscrews 11N-020 to the hinge 11N-010.

(h) Attach the hinge 11N-010 with the screws 11N-030 and the washers 11N-040.

(i) Install and assemble the ashtray assemblies 11N-120 as follows:

1 Attach the screws 11N-050 to the ashtray case 11N-140.

2 Attach the ashtray cover 11N-130 to the ashtray case 11N-140.

(j) Attach the coat hook 11N-090 with the screw 11N-080.

TASK 25-41-51-400-815-Q01

D2549010402200 D2549010405600 D2549020300800 D2549020301600 D2549020409600 D2549020411200 D2549020411600 D2549020411800 D2549020412200 D2549030410600 D2549030700800 D2549030701800 D2549030702000 D2549030703000 D2549030703200 D2549030704600 R225401627-004 R225401676-000 R225401808-000 R225401814-000

153. Assembly of the Door

A. General

This task gives you the assembly procedures of the component.

B. Job Set-up Information

(1) Consumable Materials

REFERENCE	DESIGNATION
08-007	Sealant, High Temperature

Table 7015
Consumable Materials

C. Procedure

WARNING: BE CAREFUL WHEN YOU USE SOLVENTS/CLEANING AGENTS, SEALANTS AND OTHER MATERIALS. OBEY THE MATERIAL MANUFACTURER'S INSTRUCTIONS AND THE LOCAL REGULATIONS. MAKE SURE THAT THERE IS A GOOD FLOW OF AIR THROUGH THE WORK AREA. DO NOT BREATHE THE FUMES. DO NOT SMOKE. DO NOT USE THESE MATERIALS NEAR A FLAME, SPARKS OR SOURCES OF HEAT. USE PROTECTIVE CLOTHING, GOGGLES AND GLOVES. IF YOU GET ONE OF THESE MATERIALS ON YOUR SKIN OR IN YOUR EYES, FLUSH IT AWAY WITH A FLOW OF CLEAN WATER. IF YOU GET ONE OF THESE MATERIALS IN YOUR MOUTH, GET IMMEDIATE MEDICAL AID. IN GENERAL, THESE MATERIALS ARE POISONOUS, FLAMMABLE AND SKIN IRRITANTS.

CAUTION: DO ALL THE WORK ON A CLEAN, SOFT SURFACE TO PREVENT DAMAGE TO THE COMPONENTS.

CAUTION: MAKE SURE THAT ALL THE PARTS ARE CLEAN BEFORE YOU ASSEMBLE THEM.

SUB TASK 25-41-51-440-148-A01

D2549010405600 D2549020300800 D2549020301600 D2549020409600 D2549020411200 D2549020411600 D2549020411800 D2549020412200

D2549030410600 D2549030700800 D2549030701800 D2549030703200
D2549030704600 R225401627-004 R225401808-000 R225401814-000

1. Assembly of the Door (11P-1)

   (a) Attach the air outlets 11P-170 with the screws 11P-180.

   (b) Attach the latch assembly 11P-150 with the screws 11P-030 to the single door assembly 11P-001.

   (c) Attach the threaded bolt 11P-110.

   (d) Assembly and Installation of the Lock Assy 11P-100

      1 Install the release system 11P-104 and the lock 11P-102.

      2 Install the slider pin to the lock 11P-102.

      3 Turn the folding door assy over, lift the flap above the lock 11P-102 and install the screws that install the release system 11P-104.

      4 Install the knob 11P-106 to the lock 11P-102 and the inside face of the folding door assy with a spanner.

   (e) Install the screws 11P-030.

   (f) Attach the sections 11P-060, 11P-070 with the screws 11P-050.

   (g) Assemble the hinge 11P-010 as follows:

      WARNING: BE CAREFUL WHEN YOU USE MATERIAL NO. 08-007 SEALANT, HIGH TEMPERATURE. OBEY THE MATERIAL MANUFACTURER'S INSTRUCTIONS.

      1 Apply the Material No. 08-007 Sealant, High Temperature to the setscrews 11P-020 and attach the setscrews 11P-020 to the hinge 11P-010.

   (h) Attach the hinge 11P-010 with the screws 11P-030 and the washers 11P-040.

   (i) Install and assemble the ashtray assemblies 11P-120 as follows:

      1 Attach the screws 11P-050 to the ashtray case 11P-140.

      2 Attach the ashtray cover 11P-130 to the ashtray case 11P-140.

(j) Attach the coat hook 11P-090 with the screw 11P-080.

SUB TASK 25-41-51-440-148-B01
D2549010402200 D2549030702000 D2549030703000 R225401676-000

2. Assembly of the Door (11P-1)

(a) Attach the air outlets 11P-170 with the screws 11P-180.

(b) Attach the latch assembly 11P-155 with the screws 11P-030 to the single door assembly 11P-001.

NOTE: For further instructions, see CMMV 25-41-60_80477 (latch assembly).

(c) Attach the threaded bolt 11P-110.

(d) Assembly and Installation of the Lock Assy 11P-100

1 Install the release system 11P-104 and the lock 11P-102.

2 Install the slider pin to the lock 11P-102.

3 Turn the folding door assy over, lift the flap above the lock 11P-102 and install the screws that install the release system 11P-104.

4 Install the knob 11P-106 to the lock 11P-102 and the inside face of the folding door assy with a spanner.

(e) Install the screws 11P-030.

(f) Attach the sections 11P-060, 11P-070 with the screws 11P-050.

(g) Assemble the hinge 11P-010 as follows:

WARNING: BE CAREFUL WHEN YOU USE MATERIAL NO. 08-007 SEALANT, HIGH TEMPERATURE. OBEY THE MATERIAL MANUFACTURER'S INSTRUCTIONS.

1 Apply the Material No. 08-007 Sealant, High Temperature to the setscrews 11P-020 and attach the setscrews 11P-020 to the hinge 11P-010.

(h) Attach the hinge 11P-010 with the screws 11P-030 and the washers 11P-040.

(i) Install and assemble the ashtray assemblies 11P-120 as follows:

1 Attach the screws 11P-050 to the ashtray case 11P-140.

2 Attach the ashtray cover 11P-130 to the ashtray case 11P-140.

(j) Attach the coat hook 11P-090 with the screw 11P-080.

TASK 25-41-51-400-815-R01
D2547161903000 D2549010504200 D2549010504400 D2549010504600 D2549010504800 D2549010507800 D2549010508400 D2549010508800 D2549010509000 D2549020500200 D2549020503600 D2549020601200 D2549020601800 D2549020603200 D2549030503600

154. Assembly of the Door

A. General

This task gives you the assembly procedures of the component.

B. Job Set-up Information
(1) Consumable Materials

REFERENCE	DESIGNATION
08-007	Sealant, High Temperature

Table 7016
Consumable Materials

C. Procedure

WARNING: BE CAREFUL WHEN YOU USE SOLVENTS/CLEANING AGENTS, SEALANTS AND OTHER MATERIALS. OBEY THE MATERIAL MANUFACTURER'S INSTRUCTIONS AND THE LOCAL REGULATIONS. MAKE SURE THAT THERE IS A GOOD FLOW OF AIR THROUGH THE WORK AREA. DO NOT BREATHE THE FUMES. DO NOT SMOKE. DO NOT USE THESE MATERIALS NEAR A FLAME, SPARKS OR SOURCES OF HEAT. USE PROTECTIVE CLOTHING, GOGGLES AND GLOVES. IF YOU GET ONE OF THESE MATERIALS ON YOUR SKIN OR IN YOUR EYES, FLUSH IT AWAY WITH A FLOW OF CLEAN WATER. IF YOU GET ONE OF THESE MATERIALS IN YOUR MOUTH, GET IMMEDIATE MEDICAL AID. IN GENERAL, THESE MATERIALS ARE POISONOUS, FLAMMABLE AND SKIN IRRITANTS.

CAUTION: DO ALL THE WORK ON A CLEAN, SOFT SURFACE TO PREVENT DAMAGE TO THE COMPONENTS.

CAUTION: MAKE SURE THAT ALL THE PARTS ARE CLEAN BEFORE YOU ASSEMBLE THEM.

SUB TASK 25-41-51-440-149-A01
1. Assembly of the Door (11Q-1)

(a) Attach the air outlets 11Q-170 with the screws 11Q-180.

(b) Attach the latch assembly 11Q-150 with the screws 11Q-030 to the single door assembly 11Q-001.

NOTE: For further instructions, see CMMV 25-41-60_80477 (latch assembly).

(c) Attach the threaded bolt 11Q-110.

(d) Assembly and Installation of the Lock Assy 11Q-100

1 Install the release system 11Q-104 and the lock 11Q-102.

2 Install the slider pin to the lock 11Q-102.

3 Turn the folding door assy over, lift the flap above the lock 11Q-102 and install the screws that install the release system 11Q-104.

4 Install the knob 11Q-106 to the lock 11Q-102 and the inside face of the folding door assy with a spanner.

(e) Install the screws 11Q-030.

(f) Attach the sections 11Q-060, 11Q-070 with the screws 11Q-050.

(g) Assemble the hinge 11Q-010 as follows:

WARNING: BE CAREFUL WHEN YOU USE MATERIAL NO. 08-007 SEALANT, HIGH TEMPERATURE. OBEY THE MATERIAL MANUFACTURER'S INSTRUCTIONS.

1 Apply the Material No. 08-007 Sealant, High Temperature to the setscrews 11Q-020 and attach the setscrews 11Q-020 to the hinge 11Q-010.

(h) Attach the hinge 11Q-010 with the screws 11Q-030 and the washers 11Q-040.

(i) Install and assemble the ashtray assemblies 11Q-120 as follows:

1 Attach the screws 11Q-050 to the ashtray case 11Q-140.

2 Attach the ashtray cover 11Q-130 to the ashtray case 11Q-140.

(j) Attach the coat hook 11Q-090 with the screw 11Q-080.

TASK 25-41-51-400-815-S01
D2549030610200 D2549030701200

155. Assembly of the Door

A. General

This task gives you the assembly procedures of the component.

B. Job Set-up Information
(1) Consumable Materials

REFERENCE	DESIGNATION
08-007	Sealant, High Temperature

Table 7017
Consumable Materials

C. Procedure

WARNING: BE CAREFUL WHEN YOU USE SOLVENTS/CLEANING AGENTS, SEALANTS AND OTHER MATERIALS. OBEY THE MATERIAL MANUFACTURER'S INSTRUCTIONS AND THE LOCAL REGULATIONS. MAKE SURE THAT THERE IS A GOOD FLOW OF AIR THROUGH THE WORK AREA. DO NOT BREATHE THE FUMES. DO NOT SMOKE. DO NOT USE THESE MATERIALS NEAR A FLAME, SPARKS OR SOURCES OF HEAT. USE PROTECTIVE CLOTHING, GOGGLES AND GLOVES. IF YOU GET ONE OF THESE MATERIALS ON YOUR SKIN OR IN YOUR EYES, FLUSH IT AWAY WITH A FLOW OF CLEAN WATER. IF YOU GET ONE OF THESE MATERIALS IN YOUR MOUTH, GET IMMEDIATE MEDICAL AID. IN GENERAL, THESE MATERIALS ARE POISONOUS, FLAMMABLE AND SKIN IRRITANTS.

CAUTION: DO ALL THE WORK ON A CLEAN, SOFT SURFACE TO PREVENT DAMAGE TO THE COMPONENTS.

CAUTION: MAKE SURE THAT ALL THE PARTS ARE CLEAN BEFORE YOU ASSEMBLE THEM.

SUB TASK 25-41-51-400-114-A01
1. Assembly of the Door (11R-1)

(a) Attach the air outlets 11R-060 with the screws 11R-170.

(b) Attach the latch assembly 11R-120 with the screws 11R-140 to the single door assembly 11R-001.

(c) Attach the threaded bolt 11R-130.

(d) Assembly and Installation of the Lock Assy 11R-110

1 Install the release system 11R-114 and the lock 11R-112.

2 Install the slider pin to the lock 11R-112.

3 Turn the folding door assy over, lift the flap above the lock 11R-112 and install the screws that install the release system 11R-114.

4 Install the knob 11R-116 to the lock 11R-112 and the inside face of the folding door assy with a spanner.

(e) Install the screws 11R-140.

(f) Attach the sections 11R-030, 11R-040 with the screws 11R-160.

(g) Assemble the hinge 11R-010 as follows:

WARNING: BE CAREFUL WHEN YOU USE MATERIAL NO. 08-007 SEALANT, HIGH TEMPERATURE. OBEY THE MATERIAL MANUFACTURER'S INSTRUCTIONS.

1 Apply the Material No. 08-007 Sealant, High Temperature to the setscrews 11R-020 and attach the setscrews 11R-020 to the hinge 11R-010.

(h) Attach the hinge 11R-010 with the screws 11R-140 and the washers 11R-150.

(i) Install and assemble the ashtray assemblies 11R-070 as follows:

1 Attach the screws 11R-160 to the ashtray case 11R-090.

2 Attach the ashtray cover 11R-080 to the ashtray case 11R-090.

(j) Attach the coat hook 11R-100 with the screw 11R-180.

TASK 25-41-51-400-816-A01

D2547161903000 D2549010400200 D2549010400400 D2549010400600 D2549010400800
D2549010403000 D2549010500000 D2549010500400 D2549010500600 D2549010500800
D2549010501000 D2549010501200 D2549010501400 D2549010501600 D2549010501800
D2549010502000 D2549010502200 D2549010502400 D2549010502600 D2549010502800
D2549010503200 D2549010503400 D2549010503600 D2549010503800 D2549010504400
D2549010504600 D2549010505000 D2549010505200 D2549010505400 D2549010505600
D2549010505800 D2549010506000 D2549010506200 D2549010506400 D2549010506800
D2549010507000 D2549010507200 D2549010507400 D2549010507600 D2549010507800
D2549010508000 D2549010508200 D2549010508600 D2549010508800 D2549010509200
D2549010509400 D2549010509600 D2549010509800 D2549010510000 D2549010510400
D2549010510600 D2549010510800 D2549010511000 D2549010511400 D2549010511600
D2549010511800 D2549010512000 D2549010512200 D2549010512400 D2549010512600
D2549010513000 D2549010513400 D2549010513600 D2549010513800 D2549010514000
D2549010514400 D2549010514600 D2549010514800 D2549010600000 D2549010600200
D2549010600400 D2549010600600 D2549010600800 D2549010601200 D2549010601400
D2549010601600 D2549010601800 D2549010602000 D2549010602200 D2549010602400
D2549010602600 D2549010602800 D2549010603000 D2549010603200 D2549010603400
D2549010603600 D2549010603800 D2549010604000 D2549010604200 D2549010604400
D2549010604600 D2549010604800 D2549010605000 D2549010605200 D2549010605600
D2549010605800 D2549010606000 D2549010606200 D2549010606400 D2549010606600
D2549010606800 D2549010607000 D2549010607200 D2549010607600 D2549010607800
D2549010608200 D2549010608400 D2549010608600 D2549010608800 D2549010609200
D2549010609400 D2549010609600 D2549010609800 D2549010610200 D2549010610400
D2549010610800 D2549010611000 D2549010611200 D2549010611400 D2549010611800
D2549010612200 D2549010612400 D2549010612600 D2549010613000 D2549010613200
D2549010613400 D2549010614200 D2549010614400 D2549010614800 D2549020400000
D2549020400200 D2549020400400 D2549020404200 D2549020404400 D2549020404600
D2549020404800 D2549020405000 D2549020405200 D2549020405400 D2549020405600
D2549020405800 D2549020406200 D2549020500000 D2549020500200 D2549020500400
D2549020500600 D2549020500800 D2549020501000 D2549020501200 D2549020501400
D2549020501600 D2549020501800 D2549020502000 D2549020502200 D2549020502400
D2549020502600 D2549020502800 D2549020503000 D2549020503200 D2549020503400
D2549020503600 D2549020503800 D2549020504000 D2549020504200 D2549020504400
D2549020504600 D2549020504800 D2549020505000 D2549020505200 D2549020505400
D2549020505600 D2549020505800 D2549020506000 D2549020506200 D2549020506400
D2549020506600 D2549020506800 D2549020507000 D2549020507200 D2549020507400
D2549020507600 D2549020507800 D2549020508000 D2549020508200 D2549020508400
D2549020508600 D2549020508800 D2549020509000 D2549020509200 D2549020509600
D2549020509800 D2549020510400 D2549020510600 D2549020510800 D2549020511000
D2549020511200 D2549020511800 D2549020512000 D2549020512200 D2549020512400
D2549020512600 D2549020512800 D2549020513000 D2549020513200 D2549020513400
D2549020513600 D2549020513800 D2549020514000 D2549020514200 D2549020514400
D2549020514600 D2549020514800 D2549020600200 D2549020600400 D2549020600800
D2549020601000 D2549020601200 D2549020601400 D2549020601600 D2549020601800
D2549020602000 D2549020602200 D2549020602400 D2549020602600 D2549020602800
D2549020603000 D2549020603400 D2549020603600 D2549020603800 D2549020604000

D2549020604200 D2549020604400 D2549020604600 D2549020604800 D2549020605000
D2549020605200 D2549020605400 D2549020605600 D2549020605800 D2549020606400
D2549020606600 D2549020606800 D2549020607000 D2549020607200 D2549020607400
D2549020607600 D2549020607800 D2549020608200 D2549020608400 D2549020608600
D2549020609000 D2549020609400 D2549020609600 D2549020609800 D2549020610000
D2549020610200 D2549020610400 D2549020610600 D2549020610800 D2549020611000
D2549020611200 D2549020611400 D2549020611600 D2549020611800 D2549020612200
D2549020612400 D2549020612600 D2549020612800 D2549020613000 D2549020613200
D2549020613600 D2549020613800 D2549020614000 D2549020614400 D2549020614600
D2549020614800 D2549020700000 D2549020700200 D2549020700400 D2549020700600
D2549020700800 D2549020701000 D2549020701200 D2549020701400 D2549020701600
D2549020701800 D2549020702000 D2549020702200 D2549020702400 D2549020702600
D2549020703200 D2549020703400 D2549020703600 D2549020703800 D2549020704000
D2549020704200 D2549020704400 D2549020704800 D2549020705000 D2549020705200
D2549020705400 D2549020705600 D2549020705800 D2549020706200 D2549020706600
D2549020706800 D2549020707000 D2549020707200 D2549020707400 D2549020708000
D2549020708200 D2549020708400 D2549020708600 D2549020709000 D2549020709200
D2549020709400 D2549020709600 D2549020709800 D2549020710000 D2549020710200
D2549020710400 D2549020710600 D2549020710800 D2549020711000 D2549020711200
D2549020711400 D2549020711600 D2549020712000 D2549020712200 D2549020712400
D2549020712600 D2549020712800 D2549020713000 D2549020713200 D2549020713400
D2549020713600 D2549020713800 D2549020714000 D2549020714400 D2549020714600
D2549020800200 D2549020800400 D2549020800600 D2549020800800 D2549020801000
D2549020801200 D2549020801400 D2549020801600 D2549020801800 D2549020802000
D2549020802200 D2549020802400 D2549020802800 D2549020803000 D2549020803200
D2549020803400 D2549020803600 D2549020803800 D2549020804000 D2549020804200
D2549020804800 D2549020805000 D2549020805200 D2549020805400 D2549020805800
D2549020806000 D2549020806200 D2549020806400 D2549020806600 D2549020806800
D2549020807000 D2549020807400 D2549020807600 D2549020807800 D2549020808200
D2549020808600 D2549020808800 D2549020809000 D2549020809400 D2549020809800
D2549020810000 D2549020810200 D2549020810400 D2549020810600 D2549020810800
D2549020811200 D2549020811400 D2549020811600 D2549020811800 D2549020812000
D2549020812200 D2549020812400 D2549020812600 D2549020812800 D2549020813000
D2549020813200 D2549020813400 D2549020813600 D2549020813800 D2549020814000
D2549020814200 D2549020814400 D2549020814600 D2549020814800 D2549030400000
D2549030400200 D2549030400400 D2549030400600 D2549030401000 D2549030401200
D2549030401400 D2549030401600 D2549030401800 D2549030402000 D2549030402200
D2549030402400 D2549030402600 D2549030402800 D2549030403000 D2549030403400
D2549030403600 D2549030403800 D2549030404000 D2549030404200 D2549030404400
D2549030404600 D2549030404800 D2549030405000 D2549030405200 D2549030405400
D2549030405600 D2549030405800 D2549030406000 D2549030406400 D2549030406600
D2549030406800 D2549030407000 D2549030407200 D2549030407400 D2549030407600
D2549030407800 D2549030408000 D2549030408200 D2549030408400 D2549030408600
D2549030409800 D2549030410400 D2549030500200 D2549030500400 D2549030500600
D2549030500800 D2549030501000 D2549030501200 D2549030501400 D2549030501600
D2549030501800 D2549030502000 D2549030502200 D2549030502400 D2549030502600
D2549030502800 D2549030503000 D2549030503200 D2549030503400 D2549030503600

D2549030503800 D2549030504000 D2549030504200 D2549030504600 D2549030504800
D2549030505200 D2549030505400 D2549030505600 D2549030505800 D2549030506200
D2549030506400 D2549030506600 D2549030506800 D2549030507000 D2549030507200
D2549030507400 D2549030507600 D2549030507800 D2549030508000 D2549030508200
D2549030508600 D2549030508800 D2549030509000 D2549030509200 D2549030509400
D2549030509600 D2549030509800 D2549030510200 D2549030510400 D2549030510600
D2549030510800 D2549030511000 D2549030511200 D2549030511400 D2549030511600
D2549030511800 D2549030512000 D2549030512200 D2549030512400 D2549030512800
D2549030513000 D2549030513200 D2549030513400 D2549030513600 D2549030513800
D2549030514000 D2549030514200 D2549030514400 D2549030514600 D2549030514800
D2549030600000 D2549030600200 D2549030600400 D2549030600600 D2549030600800
D2549030601000 D2549030601200 D2549030601600 D2549030601800 D2549030602000
D2549030602400 D2549030602600 D2549030602800 D2549030603000 D2549030603200
D2549030603400 D2549030603600 D2549030603800 D2549030604200 D2549030604600
D2549030604800 D2549030605000 D2549030605200 D2549030605400 D2549030605600
D2549030605800 D2549030606000 D2549030606200 D2549030606400 D2549030606600
D2549030606800 D2549030607000 D2549030607200 D2549030607400 D2549030607600
D2549030607800 D2549030608000 D2549030608400 D2549030608600 D2549030608800
D2549030609000 D2549030609200 D2549030609800 D2549030610000 D2549030610200
D2549030610400 D2549030610600 D2549030611000 D2549030611200 D2549030611400
D2549030611600 D2549030611800 D2549030612000 D2549030612200 D2549030612400
D2549030612600 D2549030612800 D2549030613200 D2549030613400 D2549030613600
D2549030613800 D2549030614000 D2549030614200 D2549030614400 D2549030614600
D2549030614800 D2549040500200 D2549040500600 R225401107-000 R225401115-000
R225401115-002 R225401128-000 R225401133-000 R225401134-000 R225401134-002
R225401134-004 R225401134-006 R225401134-008 R225401134-010 R225401134-012
R225401134-016 R225401134-018 R225401134-020 R225401134-022 R225401134-024
R225401134-026 R225401134-028 R225401134-030 R225401134-032 R225401134-034
R225401134-036 R225401136-000 R225401136-004 R225401136-010 R225401136-016
R225401136-018 R225401136-020 R225401136-022 R225401137-000 R225401137-002
R225401137-004 R225401137-006 R225401137-008 R225401137-010 R225401137-012
R225401137-014 R225401137-016 R225401139-000 R225401142-000 R225401142-002
R225401145-000 R225401145-002 R225401145-004 R225401145-006 R225401145-008
R225401145-010 R225401145-012 R225401145-014 R225401146-000 R225401146-002
R225401152-000 R225401152-002 R225401152-004 R225401152-006 R225401152-008
R225401153-000 R225401159-000 R225401168-000 R225401168-002 R225401168-004
R225401168-006 R225401168-008 R225401168-010 R225401168-012 R225401168-014
R225401168-016 R225401168-018 R225401168-020 R225401168-022 R225401168-024
R225401168-026 R225401168-028 R225401172-000 R225401172-002 R225401172-004
R225401172-006 R225401172-008 R225401172-010 R225401172-012 R225401172-014
R225401172-016 R225401172-018 R225401175-000 R225401175-002 R225401176-000
R225401183-000 R225401183-002 R225401183-008 R225401188-000 R225401188-002
R225401188-004 R225401188-006 R225401195-000 R225401196-000 R225401196-002
R225401196-004 R225401196-006 R225401196-008 R225401196-010 R225401196-012
R225401196-014 R225401196-016 R225401196-034 R225401196-036 R225401196-038
R225401196-040 R225401196-044 R225401196-046 R225401196-048 R225401196-050
R225401196-052 R225401196-054 R225401196-056 R225401196-058 R225401196-060

R225401196-062 R225401199-000 R225401199-002 R225401199-004 R225401199-006 R225401199-008 R225401199-010 R225401600-000 R225401600-002 R225401600-004 R225401603-000 R225401605-000 R225401605-002 R225401609-000 R225401611-006 R225401611-008 R225401611-010 R225401611-012 R225401613-000 R225401614-000 R225401618-000 R225401618-002 R225401619-000 R225401619-002 R225401622-000 R225401622-002 R225401625-000 R225401629-000 R225401629-002 R225401639-000 R225401639-002 R225401643-000 R225401643-002 R225401643-004 R225401646-000 R225401647-000 R225401648-000 R225401648-002 R225401656-000 R225401656-002 R225401662-000 R225401662-002 R225401673-000 R225401693-000

156. Installation of the Door

A. General

This task gives you the installation and assembly procedures of the component.

B. Job Set-up Information
(1) Consumable Materials

REFERENCE	DESIGNATION
08-007	Sealant, High Temperature

Table 7018
Consumable Materials

C. Procedure

WARNING: **BE CAREFUL WHEN YOU USE SOLVENTS/CLEANING AGENTS, SEALANTS AND OTHER MATERIALS. OBEY THE MATERIAL MANUFACTURER'S INSTRUCTIONS AND THE LOCAL REGULATIONS. MAKE SURE THAT THERE IS A GOOD FLOW OF AIR THROUGH THE WORK AREA. DO NOT BREATHE THE FUMES. DO NOT SMOKE. DO NOT USE THESE MATERIALS NEAR A FLAME, SPARKS OR SOURCES OF HEAT. USE PROTECTIVE CLOTHING, GOGGLES AND GLOVES. IF YOU GET ONE OF THESE MATERIALS ON YOUR SKIN OR IN YOUR EYES, FLUSH IT AWAY WITH A FLOW OF CLEAN WATER. IF YOU GET ONE OF THESE MATERIALS IN YOUR MOUTH, GET IMMEDIATE MEDICAL AID. IN GENERAL, THESE MATERIALS ARE POISONOUS, FLAMMABLE AND SKIN IRRITANTS.**

CAUTION: **DO ALL THE WORK ON A CLEAN, SOFT SURFACE TO PREVENT DAMAGE TO THE COMPONENTS.**

CAUTION: **MAKE SURE THAT ALL THE PARTS ARE CLEAN BEFORE YOU ASSEMBLE THEM.**

SUB TASK 25-41-51-400-068-A01

D2547161903000 D2549010400200 D2549010400400 D2549010400600
D2549010400800 D2549010403000 D2549010500000 D2549010500400
D2549010500600 D2549010500800 D2549010501000 D2549010501200
D2549010501400 D2549010501600 D2549010501800 D2549010502000
D2549010502200 D2549010502400 D2549010502600 D2549010502800
D2549010503200 D2549010503400 D2549010503600 D2549010503800
D2549010504400 D2549010504600 D2549010505000 D2549010505200
D2549010505400 D2549010505600 D2549010505800 D2549010506000
D2549010506200 D2549010506400 D2549010506800 D2549010507000
D2549010507200 D2549010507400 D2549010507600 D2549010507800
D2549010508000 D2549010508200 D2549010508600 D2549010508800
D2549010509200 D2549010509400 D2549010509600 D2549010509800
D2549010510000 D2549010510400 D2549010510600 D2549010510800
D2549010511000 D2549010511400 D2549010511600 D2549010511800
D2549010512000 D2549010512200 D2549010512400 D2549010512600
D2549010513000 D2549010513400 D2549010513600 D2549010513800
D2549010514000 D2549010514400 D2549010514600 D2549010514800
D2549010600000 D2549010600200 D2549010600400 D2549010600600
D2549010600800 D2549010601200 D2549010601400 D2549010601600
D2549010601800 D2549010602000 D2549010602200 D2549010602400
D2549010602600 D2549010602800 D2549010603000 D2549010603200
D2549010603400 D2549010603600 D2549010603800 D2549010604000
D2549010604200 D2549010604400 D2549010604600 D2549010604800
D2549010605000 D2549010605200 D2549010605600 D2549010605800
D2549010606000 D2549010606200 D2549010606400 D2549010606600
D2549010606800 D2549010607000 D2549010607200 D2549010607600
D2549010607800 D2549010608200 D2549010608400 D2549010608600
D2549010608800 D2549010609200 D2549010609400 D2549010609600
D2549010609800 D2549010610200 D2549010610400 D2549010610800
D2549010611000 D2549010611200 D2549010611400 D2549010611800
D2549010612200 D2549010612400 D2549010612600 D2549010613000
D2549010613200 D2549010613400 D2549010614200 D2549010614400
D2549010614800 D2549020400000 D2549020400200 D2549020400400
D2549020404200 D2549020404400 D2549020404600 D2549020404800
D2549020405000 D2549020405200 D2549020405400 D2549020405600
D2549020405800 D2549020406200 D2549020500000 D2549020500200
D2549020500400 D2549020500600 D2549020500800 D2549020501000
D2549020501200 D2549020501400 D2549020501600 D2549020501800
D2549020502000 D2549020502200 D2549020502400 D2549020502600
D2549020502800 D2549020503000 D2549020503200 D2549020503400
D2549020503600 D2549020503800 D2549020504000 D2549020504200
D2549020504400 D2549020504600 D2549020504800 D2549020505000
D2549020505200 D2549020505400 D2549020505600 D2549020505800
D2549020506000 D2549020506200 D2549020506400 D2549020506600
D2549020506800 D2549020507000 D2549020507200 D2549020507400
D2549020507600 D2549020507800 D2549020508000 D2549020508200

D2549020508400 D2549020508600 D2549020508800 D2549020509000
D2549020509200 D2549020509600 D2549020509800 D2549020510400
D2549020510600 D2549020510800 D2549020511000 D2549020511200
D2549020511800 D2549020512000 D2549020512200 D2549020512400
D2549020512600 D2549020512800 D2549020513000 D2549020513200
D2549020513400 D2549020513600 D2549020513800 D2549020514000
D2549020514200 D2549020514400 D2549020514600 D2549020514800
D2549020600200 D2549020600400 D2549020600800 D2549020601000
D2549020601200 D2549020601400 D2549020601600 D2549020601800
D2549020602000 D2549020602200 D2549020602400 D2549020602600
D2549020602800 D2549020603000 D2549020603400 D2549020603600
D2549020603800 D2549020604000 D2549020604200 D2549020604400
D2549020604600 D2549020604800 D2549020605000 D2549020605200
D2549020605400 D2549020605600 D2549020605800 D2549020606400
D2549020606600 D2549020606800 D2549020607000 D2549020607200
D2549020607400 D2549020607600 D2549020607800 D2549020608200
D2549020608400 D2549020608600 D2549020609000 D2549020609400
D2549020609600 D2549020609800 D2549020610200 D2549020610400
D2549020610600 D2549020610800 D2549020611000 D2549020611200
D2549020611400 D2549020611600 D2549020611800 D2549020612200
D2549020612400 D2549020612600 D2549020612800 D2549020613000
D2549020613200 D2549020613600 D2549020613800 D2549020614000
D2549020614400 D2549020614600 D2549020614800 D2549020700000
D2549020700200 D2549020700400 D2549020700600 D2549020700800
D2549020701000 D2549020701200 D2549020701400 D2549020701600
D2549020701800 D2549020702000 D2549020702200 D2549020702400
D2549020702600 D2549020703200 D2549020703400 D2549020703600
D2549020703800 D2549020704000 D2549020704200 D2549020704400
D2549020704800 D2549020705000 D2549020705200 D2549020705400
D2549020705600 D2549020705800 D2549020706200 D2549020706600
D2549020706800 D2549020707000 D2549020707200 D2549020707400
D2549020708000 D2549020708200 D2549020708400 D2549020708600
D2549020709000 D2549020709200 D2549020709400 D2549020709600
D2549020709800 D2549020710000 D2549020710200 D2549020710400
D2549020710600 D2549020710800 D2549020711000 D2549020711200
D2549020711400 D2549020711600 D2549020712000 D2549020712200
D2549020712400 D2549020712600 D2549020712800 D2549020713000
D2549020713200 D2549020713400 D2549020713600 D2549020713800
D2549020714000 D2549020714400 D2549020714600 D2549020800200
D2549020800400 D2549020800600 D2549020800800 D2549020801000
D2549020801200 D2549020801400 D2549020801600 D2549020801800
D2549020802000 D2549020802200 D2549020802400 D2549020802800
D2549020803000 D2549020803200 D2549020803400 D2549020803600
D2549020803800 D2549020804000 D2549020804200 D2549020804800
D2549020805000 D2549020805200 D2549020805400 D2549020805800
D2549020806000 D2549020806200 D2549020806400 D2549020806600
D2549020806800 D2549020807000 D2549020807400 D2549020807600

D2549020807800 D2549020808200 D2549020808600 D2549020808800
D2549020809000 D2549020809400 D2549020809800 D2549020810000
D2549020810200 D2549020810400 D2549020810600 D2549020810800
D2549020811200 D2549020811400 D2549020811600 D2549020811800
D2549020812000 D2549020812200 D2549020812400 D2549020812600
D2549020812800 D2549020813000 D2549020813200 D2549020813400
D2549020813600 D2549020813800 D2549020814000 D2549020814200
D2549020814400 D2549020814600 D2549020814800 D2549030400000
D2549030400200 D2549030400400 D2549030400600 D2549030401000
D2549030401200 D2549030401400 D2549030401600 D2549030401800
D2549030402000 D2549030402200 D2549030402400 D2549030402600
D2549030402800 D2549030403000 D2549030403400 D2549030403600
D2549030403800 D2549030404000 D2549030404200 D2549030404400
D2549030404600 D2549030404800 D2549030405000 D2549030405200
D2549030405400 D2549030405600 D2549030405800 D2549030406000
D2549030406400 D2549030406600 D2549030406800 D2549030407000
D2549030407200 D2549030407400 D2549030407600 D2549030407800
D2549030408000 D2549030408200 D2549030408400 D2549030408600
D2549030409800 D2549030410400 D2549030500200 D2549030500400
D2549030500600 D2549030500800 D2549030501000 D2549030501200
D2549030501400 D2549030501600 D2549030501800 D2549030502000
D2549030502200 D2549030502400 D2549030502600 D2549030502800
D2549030503000 D2549030503200 D2549030503400 D2549030503600
D2549030503800 D2549030504000 D2549030504200 D2549030504600
D2549030504800 D2549030505200 D2549030505400 D2549030505600
D2549030505800 D2549030506200 D2549030506400 D2549030506600
D2549030506800 D2549030507000 D2549030507200 D2549030507400
D2549030507600 D2549030507800 D2549030508000 D2549030508200
D2549030508600 D2549030508800 D2549030509000 D2549030509200
D2549030509400 D2549030509600 D2549030509800 D2549030510200
D2549030510400 D2549030510600 D2549030510800 D2549030511000
D2549030511200 D2549030511400 D2549030511600 D2549030511800
D2549030512000 D2549030512200 D2549030512400 D2549030512800
D2549030513000 D2549030513200 D2549030513400 D2549030513600
D2549030513800 D2549030514000 D2549030514200 D2549030514400
D2549030514800 D2549030600000 D2549030600200 D2549030600400
D2549030600600 D2549030600800 D2549030601000 D2549030601200
D2549030601600 D2549030601800 D2549030602000 D2549030602400
D2549030602600 D2549030602800 D2549030603000 D2549030603200
D2549030603400 D2549030603600 D2549030603800 D2549030604200
D2549030604600 D2549030604800 D2549030605000 D2549030605200
D2549030605400 D2549030605600 D2549030605800 D2549030606000
D2549030606200 D2549030606400 D2549030606600 D2549030606800
D2549030607000 D2549030607200 D2549030607400 D2549030607600
D2549030607800 D2549030608000 D2549030608400 D2549030608600
D2549030608800 D2549030609000 D2549030609200 D2549030609800
D2549030610000 D2549030610200 D2549030610400 D2549030610600

D2549030611000 D2549030611200 D2549030611400 D2549030611600 D2549030611800 D2549030612000 D2549030612200 D2549030612400 D2549030612600 D2549030612800 D2549030613200 D2549030613400 D2549030613600 D2549030613800 D2549030614000 D2549030614200 D2549030614400 D2549030614600 D2549030614800 D2549040500200 D2549040500600 R225401107-000 R225401115-000 R225401115-002 R225401128-000 R225401133-000 R225401134-000 R225401134-002 R225401134-004 R225401134-006 R225401134-008 R225401134-010 R225401134-012 R225401134-016 R225401134-018 R225401134-020 R225401134-022 R225401134-024 R225401134-026 R225401134-028 R225401134-030 R225401134-032 R225401134-034 R225401134-036 R225401136-000 R225401136-004 R225401136-010 R225401136-016 R225401136-018 R225401136-020 R225401136-022 R225401137-000 R225401137-002 R225401137-004 R225401137-006 R225401137-008 R225401137-010 R225401137-012 R225401137-014 R225401137-016 R225401139-000 R225401142-000 R225401142-002 R225401145-000 R225401145-002 R225401145-004 R225401145-006 R225401145-008 R225401145-010 R225401145-012 R225401145-014 R225401146-000 R225401146-002 R225401152-000 R225401152-002 R225401152-004 R225401152-006 R225401152-008 R225401153-000 R225401159-000 R225401168-000 R225401168-002 R225401168-004 R225401168-006 R225401168-008 R225401168-010 R225401168-012 R225401168-014 R225401168-016 R225401168-018 R225401168-020 R225401168-022 R225401168-024 R225401168-026 R225401168-028 R225401172-000 R225401172-002 R225401172-004 R225401172-006 R225401172-008 R225401172-010 R225401172-012 R225401172-014 R225401172-016 R225401172-018 R225401175-000 R225401175-002 R225401176-000 R225401183-000 R225401183-002 R225401183-008 R225401188-000 R225401188-002 R225401188-004 R225401188-006 R225401195-000 R225401196-000 R225401196-002 R225401196-004 R225401196-006 R225401196-008 R225401196-010 R225401196-012 R225401196-014 R225401196-016 R225401196-034 R225401196-036 R225401196-038 R225401196-040 R225401196-044 R225401196-046 R225401196-048 R225401196-050 R225401196-052 R225401196-054 R225401196-056 R225401196-058 R225401196-060 R225401196-062 R225401199-000 R225401199-002 R225401199-004 R225401199-006 R225401199-008 R225401199-010 R225401600-000 R225401600-002 R225401600-004 R225401603-000 R225401605-000 R225401605-002 R225401609-000 R225401611-006 R225401611-008 R225401611-010 R225401611-012 R225401613-000 R225401614-000 R225401618-000 R225401618-002 R225401619-000 R225401619-002 R225401622-000 R225401622-002 R225401625-000 R225401629-000 R225401629-002 R225401639-000 R225401639-002 R225401643-000 R225401643-002 R225401643-004 R225401646-000 R225401647-000 R225401648-000 R225401648-002 R225401656-000 R225401656-002 R225401662-000 R225401662-002 R225401673-000 R225401693-000

1. Installation of the Door (10-1), (11-1), (11A-1), (11B-1), (11C-1), (11D-1), (11E-1), (11F-1), (11G-1), (11G-1), (11H-1), (11J-1), (11K-1), (11L-1), (11M-1), (11N-1), (11P-1), (11Q-1), (11R-1),

   (a) Attach the sill 10-030 with the screws 10-080 to the floor pan.

(b) Attach the section 10-010 with the screws 10-050 and the nuts 10-070 to the lavatory structure.

(c) Attach the single door assemblies 11-001, 11A-001, 11B-001, 11C-001, 11D-001, 11E-001, 11F-001, 11G-001, 11H-001, 11J-001, 11K-001, 11L-001, 11M-001, 11N-001, 11P-001, 11Q-001 or 11R-001 and the hinges 11-010, 11A-010, 11B-010, 11C-010, 11D-010, 11E-010, 11F-010, 11G-010, 11H-010, 11J-010, 11K-010, 11L-010, 11M-010, 11N-010, 11P-010, 11Q-010 or 11R-010 with the screws 10-050, the washers 10-060 and the nuts 10-070 to the lavatory structure.

SUB TASK 25-41-51-400-068-B01
D2549020610000 D2549030514600

2. Installation of the Door (10-1), (11-1), (11A-1), (11B-1), (11C-1), (11D-1), (11E-1), (11F-1), (11G-1), (11G-1), (11H-1), (11J-1), (11K-1), (11L-1), (11M-1), (11N-1), (11P-1), (11Q-1), (11R-1),

(a) Attach the plates 10-180 with the screws 10-170 to the lavatory structure.

(b) Assemble the single-door emergency-unlocking-device assembly 10-100 as follows:

WARNING: BE CAREFUL WHEN YOU USE MATERIAL NO. 08-007 SEALANT, HIGH TEMPERATURE. OBEY THE MATERIAL MANUFACTURER'S INSTRUCTIONS.

1 Apply the Material No. 08-007 Sealant, High Temperature to the snap catch 10-140 and to the pin 10-160 and attach the emergency unlocking-device pivot 10-120, the snap catch 10-140 and the pin 10-160 to the emergency unlocking-device housing 10-110.

NOTE: Adjust the snap catch 10-140 a half turn before stop.

WARNING: BE CAREFUL WHEN YOU USE MATERIAL NO. 08-007 SEALANT, HIGH TEMPERATURE. OBEY THE MATERIAL MANUFACTURER'S INSTRUCTIONS.

2 Apply the Material No. 08-007 Sealant, High Temperature to the bolt 10-150 and attach the emergency unlocking-device strike 10-130 with the bolt 10-150 to the emergency unlocking-device housing 10-110.

(c) Attach the single-door emergency-unlocking-device assembly 10-100 with the screws 10-170 and the nuts 10-190 to the lavatory structure.

(d) Attach the sill 10-030 with the screws 10-080 to the floor pan.

(e) Attach the section 10-010 with the screws 10-050 and the nuts 10-070 to the lavatory structure.

(f) Attach the single door assemblies 11-001, 11A-001, 11B-001, 11C-001, 11D-001, 11E-001, 11F-001, 11G-001, 11H-001, 11J-001, 11K-001, 11L-001, 11M-001, 11N-001, 11P-001, 11Q-001 or 11R-001 and the hinges 11-010, 11A-010, 11B-010, 11C-010, 11D-010, 11E-010, 11F-010, 11G-010, 11H-010, 11J-010, 11K-010, 11L-010, 11M-010, 11N-010, 11P-010, 11Q-010 or 11R-010 with the screws 10-050, the washers 10-060 and the nuts 10-070 to the lavatory structure.

TASK 25-41-51-400-816-B01

D2547160900200 D2547160900400 D2549010400000 D2549010401000 D2549010401400
D2549010401600 D2549010401800 D2549010402000 D2549010402200 D2549010402400
D2549010402600 D2549010402800 D2549010403200 D2549010403400 D2549010403600
D2549010403800 D2549010404000 D2549010404200 D2549010404400 D2549010404600
D2549010404800 D2549010405000 D2549010405200 D2549010405400 D2549010405600
D2549010405800 D2549010406000 D2549010406200 D2549010406400 D2549010406800
D2549010407000 D2549010504200 D2549010504800 D2549010508400 D2549010509000
D2549010510200 D2549010511200 D2549010513200 D2549010514200 D2549010601000
D2549010607400 D2549010609000 D2549010610000 D2549010610600 D2549010611600
D2549010612000 D2549010613600 D2549010613800 D2549010614600 D2549020300000
D2549020300400 D2549020300600 D2549020300800 D2549020301000 D2549020301600
D2549020301800 D2549020302000 D2549020302800 D2549020400600 D2549020400800
D2549020401000 D2549020401200 D2549020401400 D2549020401600 D2549020402000
D2549020402200 D2549020402400 D2549020402600 D2549020403000 D2549020403200
D2549020403400 D2549020403600 D2549020403800 D2549020404000 D2549020406000
D2549020406400 D2549020406600 D2549020406800 D2549020407000 D2549020407200
D2549020407400 D2549020407600 D2549020407800 D2549020408000 D2549020408200
D2549020408600 D2549020408800 D2549020409000 D2549020409200 D2549020409400
D2549020409600 D2549020409800 D2549020410200 D2549020410400 D2549020410600
D2549020410800 D2549020411000 D2549020411200 D2549020411400 D2549020411600
D2549020411800 D2549020412000 D2549020412200 D2549020412400 D2549020412600
D2549020412800 D2549020413000 D2549020413200 D2549020413400 D2549020413600
D2549020413800 D2549020414000 D2549020414200 D2549020414600 D2549020414800
D2549020510000 D2549020511600 D2549020600000 D2549020603200 D2549020606000
D2549020608800 D2549020609200 D2549020612000 D2549020702800 D2549020704600
D2549020706000 D2549020706400 D2549020707600 D2549020707800 D2549020708800
D2549020800000 D2549020802600 D2549020804400 D2549020805600 D2549020807200
D2549020808400 D2549020809600 D2549030409000 D2549030409200 D2549030409400
D2549030409600 D2549030410000 D2549030410200 D2549030410600 D2549030410800
D2549030411200 D2549030411400 D2549030411600 D2549030411800 D2549030412000
D2549030412200 D2549030412400 D2549030412600 D2549030412800 D2549030413000
D2549030413200 D2549030413400 D2549030413600 D2549030414000 D2549030414200
D2549030414400 D2549030414600 D2549030414800 D2549030506000 D2549030508400
D2549030510000 D2549030601400 D2549030602200 D2549030604400 D2549030608200
D2549030700000 D2549030700200 D2549030700400 D2549030700600 D2549030700800
D2549030701000 D2549030701200 D2549030701400 D2549030701600 D2549030701800
D2549030702000 D2549030702200 D2549030702400 D2549030702600 D2549030702800
D2549030703000 D2549030703200 D2549030703400 D2549030703600 D2549030703800
D2549030704000 D2549030704200 D2549030704400 D2549030704600 D2549030704800
D2549030705200 D2549030705600 D2549040500400 D2549040500800 D2549040501000
D2549040501200 D2549040501400 D2549040501600 D2549040501800 D2549040502000
R225401107-002 R225401107-004 R225401134-014 R225401134-038 R225401136-006
R225401136-008 R225401136-012 R225401136-014 R225401136-024 R225401152-010
R225401160-000 R225401160-002 R225401183-004 R225401183-006 R225401192-000
R225401192-002 R225401196-018 R225401196-020 R225401196-022 R225401196-024
R225401196-042 R225401196-064 R225401196-066 R225401196-068 R225401196-070

R225401199-012 R225401602-000 R225401611-000 R225401611-014 R225401611-016 R225401611-018 R225401611-020 R225401624-000 R225401627-000 R225401627-002 R225401627-004 R225401643-006 R225401643-008 R225401646-002 R225401648-004 R225401648-006 R225401648-008 R225401649-000 R225401658-000 R225401671-000 R225401671-002 R225401673-002 R225401673-004 R225401673-006 R225401675-000 R225401676-000 R225401683-000 R225401685-000 R225401685-002 R225401688-000 R225401689-004 R225401689-006 R225401691-000 R225401691-002 R225401697-000 R225401697-002 R225401803-000 R225401803-002 R225401808-000 R225401811-000 R225401814-000

157. Installation of the Door

A. General

This task gives you the installation and assembly procedures of the component.

B. Procedure

WARNING: BE CAREFUL WHEN YOU USE SOLVENTS/CLEANING AGENTS, SEALANTS AND OTHER MATERIALS. OBEY THE MATERIAL MANUFACTURER'S INSTRUCTIONS AND THE LOCAL REGULATIONS. MAKE SURE THAT THERE IS A GOOD FLOW OF AIR THROUGH THE WORK AREA. DO NOT BREATHE THE FUMES. DO NOT SMOKE. DO NOT USE THESE MATERIALS NEAR A FLAME, SPARKS OR SOURCES OF HEAT. USE PROTECTIVE CLOTHING, GOGGLES AND GLOVES. IF YOU GET ONE OF THESE MATERIALS ON YOUR SKIN OR IN YOUR EYES, FLUSH IT AWAY WITH A FLOW OF CLEAN WATER. IF YOU GET ONE OF THESE MATERIALS IN YOUR MOUTH, GET IMMEDIATE MEDICAL AID. IN GENERAL, THESE MATERIALS ARE POISONOUS, FLAMMABLE AND SKIN IRRITANTS.

CAUTION: DO ALL THE WORK ON A CLEAN, SOFT SURFACE TO PREVENT DAMAGE TO THE COMPONENTS.

CAUTION: MAKE SURE THAT ALL THE PARTS ARE CLEAN BEFORE YOU ASSEMBLE THEM.

SUB TASK 25-41-51-400-066-A01

1. Installation of the Door (10A-1), (11-1), (11A-1), (11B-1), (11C-1), (11D-1), (11E-1), (11F-1), (11G-1), (11G-1), (11H-1), (11J-1), (11K-1), (11L-1), (11M-1), (11N-1), (11P-1), (11Q-1), (11R-1),

   (a) Attach the sill 10A-030 and the spacer 10A-020 with the screws 10A-080 to the floor pan.

   (b) Attach the section 10A-010 with the screws 10A-050 and the nuts 10A-070 to the lavatory structure.

(c) Attach the single door assemblies 11-001, 11A-001, 11B-001, 11C-001, 11D-001, 11E-001, 11F-001, 11G-001, 11H-001, 11J-001, 11K-001, 11L-001, 11M-001, 11N-001, 11P-001, 11Q-001 or 11R-001 and the hinges 11-010, 11A-010, 11B-010, 11C-010, 11D-010, 11E-010, 11F-010, 11G-010, 11H-010, 11J-010, 11K-010, 11L-010, 11M-010, 11N-010, 11P-010, 11Q-010 or 11R-010 with the screws 10A-050, the washers 10A-060 and the nuts 10A-070 to the lavatory structure.

TASK 25-41-51-400-817-A01

D2547160900200 D2547160900400 D2547161903000 D2549010400000 D2549010400200
D2549010400400 D2549010400600 D2549010400800 D2549010401000 D2549010401400
D2549010401600 D2549010401800 D2549010402000 D2549010402200 D2549010402400
D2549010402600 D2549010402800 D2549010403000 D2549010403200 D2549010403400
D2549010403600 D2549010403800 D2549010404000 D2549010404200 D2549010404400
D2549010404600 D2549010404800 D2549010405000 D2549010405200 D2549010405400
D2549010405600 D2549010405800 D2549010406000 D2549010406200 D2549010406400
D2549010406800 D2549010407000 D2549010500000 D2549010500400 D2549010500600
D2549010500800 D2549010501000 D2549010501200 D2549010501400 D2549010501600
D2549010501800 D2549010502000 D2549010502200 D2549010502400 D2549010502600
D2549010502800 D2549010503200 D2549010503400 D2549010503600 D2549010503800
D2549010504200 D2549010504400 D2549010504600 D2549010504800 D2549010505000
D2549010505200 D2549010505400 D2549010505600 D2549010505800 D2549010506000
D2549010506200 D2549010506400 D2549010506800 D2549010507000 D2549010507200
D2549010507400 D2549010507600 D2549010507800 D2549010508000 D2549010508200
D2549010508400 D2549010508600 D2549010508800 D2549010509000 D2549010509200
D2549010509400 D2549010509600 D2549010509800 D2549010510000 D2549010510200
D2549010510400 D2549010510600 D2549010510800 D2549010511000 D2549010511200
D2549010511400 D2549010511600 D2549010511800 D2549010512000 D2549010512200
D2549010512400 D2549010512600 D2549010513000 D2549010513200 D2549010513400
D2549010513600 D2549010513800 D2549010514000 D2549010514200 D2549010514400
D2549010514600 D2549010514800 D2549010600000 D2549010600200 D2549010600400
D2549010600600 D2549010600800 D2549010601000 D2549010601200 D2549010601400
D2549010601600 D2549010601800 D2549010602000 D2549010602200 D2549010602400
D2549010602600 D2549010602800 D2549010603000 D2549010603200 D2549010603400
D2549010603600 D2549010603800 D2549010604000 D2549010604200 D2549010604400
D2549010604600 D2549010604800 D2549010605000 D2549010605200 D2549010605600
D2549010605800 D2549010606000 D2549010606200 D2549010606400 D2549010606600
D2549010606800 D2549010607000 D2549010607200 D2549010607400 D2549010607600
D2549010607800 D2549010608200 D2549010608400 D2549010608600 D2549010608800
D2549010609000 D2549010609200 D2549010609400 D2549010609600 D2549010609800
D2549010610000 D2549010610200 D2549010610400 D2549010610600 D2549010610800
D2549010611000 D2549010611200 D2549010611400 D2549010611600 D2549010611800
D2549010612000 D2549010612200 D2549010612400 D2549010612600 D2549010613000
D2549010613200 D2549010613400 D2549010613600 D2549010613800 D2549010614200
D2549010614400 D2549010614600 D2549010614800 D2549020300000 D2549020300400
D2549020300600 D2549020300800 D2549020301000 D2549020301600 D2549020301800
D2549020302000 D2549020302800 D2549020400000 D2549020400200 D2549020400400
D2549020400600 D2549020400800 D2549020401000 D2549020401200 D2549020401400
D2549020401600 D2549020402000 D2549020402200 D2549020402400 D2549020402600
D2549020403000 D2549020403200 D2549020403400 D2549020403600 D2549020403800
D2549020404000 D2549020404200 D2549020404400 D2549020404600 D2549020404800
D2549020405000 D2549020405200 D2549020405400 D2549020405600 D2549020405800
D2549020406000 D2549020406200 D2549020406400 D2549020406600 D2549020406800
D2549020407000 D2549020407200 D2549020407400 D2549020407600 D2549020407800
D2549020408000 D2549020408200 D2549020408600 D2549020408800 D2549020409000

D2549020409200 D2549020409400 D2549020409600 D2549020409800 D2549020410200
D2549020410400 D2549020410600 D2549020410800 D2549020411000 D2549020411200
D2549020411400 D2549020411600 D2549020411800 D2549020412000 D2549020412200
D2549020412400 D2549020412600 D2549020412800 D2549020413000 D2549020413200
D2549020413400 D2549020413600 D2549020413800 D2549020414000 D2549020414200
D2549020414600 D2549020414800 D2549020500000 D2549020500200 D2549020500400
D2549020500600 D2549020500800 D2549020501000 D2549020501200 D2549020501400
D2549020501600 D2549020501800 D2549020502000 D2549020502200 D2549020502400
D2549020502600 D2549020502800 D2549020503000 D2549020503200 D2549020503400
D2549020503600 D2549020503800 D2549020504000 D2549020504200 D2549020504400
D2549020504600 D2549020504800 D2549020505000 D2549020505200 D2549020505400
D2549020505600 D2549020505800 D2549020506000 D2549020506200 D2549020506400
D2549020506600 D2549020506800 D2549020507000 D2549020507200 D2549020507400
D2549020507600 D2549020507800 D2549020508000 D2549020508200 D2549020508400
D2549020508600 D2549020508800 D2549020509000 D2549020509200 D2549020509600
D2549020509800 D2549020510000 D2549020510400 D2549020510600 D2549020510800
D2549020511000 D2549020511200 D2549020511600 D2549020511800 D2549020512000
D2549020512200 D2549020512400 D2549020512600 D2549020512800 D2549020513000
D2549020513200 D2549020513400 D2549020513600 D2549020513800 D2549020514000
D2549020514200 D2549020514400 D2549020514600 D2549020514800 D2549020600000
D2549020600200 D2549020600400 D2549020600800 D2549020601000 D2549020601200
D2549020601400 D2549020601600 D2549020601800 D2549020602000 D2549020602200
D2549020602400 D2549020602600 D2549020602800 D2549020603000 D2549020603200
D2549020603400 D2549020603600 D2549020603800 D2549020604000 D2549020604200
D2549020604400 D2549020604600 D2549020604800 D2549020605000 D2549020605200
D2549020605400 D2549020605600 D2549020605800 D2549020606000 D2549020606400
D2549020606600 D2549020606800 D2549020607000 D2549020607200 D2549020607400
D2549020607600 D2549020607800 D2549020608200 D2549020608400 D2549020608600
D2549020608800 D2549020609000 D2549020609200 D2549020609400 D2549020609600
D2549020609800 D2549020610000 D2549020610200 D2549020610400 D2549020610600
D2549020610800 D2549020611000 D2549020611200 D2549020611400 D2549020611600
D2549020611800 D2549020612000 D2549020612200 D2549020612400 D2549020612600
D2549020612800 D2549020613000 D2549020613200 D2549020613600 D2549020614000
D2549020614400 D2549020614600 D2549020614800 D2549020700000 D2549020700200
D2549020700400 D2549020700600 D2549020700800 D2549020701000 D2549020701200
D2549020701400 D2549020701600 D2549020701800 D2549020702000 D2549020702200
D2549020702400 D2549020702600 D2549020702800 D2549020703200 D2549020703400
D2549020703600 D2549020703800 D2549020704000 D2549020704200 D2549020704400
D2549020704600 D2549020704800 D2549020705000 D2549020705200 D2549020705400
D2549020705600 D2549020705800 D2549020706000 D2549020706200 D2549020706400
D2549020706600 D2549020706800 D2549020707000 D2549020707200 D2549020707400
D2549020707600 D2549020707800 D2549020708000 D2549020708200 D2549020708400
D2549020708600 D2549020708800 D2549020709000 D2549020709200 D2549020709400
D2549020709600 D2549020709800 D2549020710000 D2549020710200 D2549020710400
D2549020710600 D2549020710800 D2549020711000 D2549020711200 D2549020711400
D2549020711600 D2549020712000 D2549020712200 D2549020712400 D2549020712600
D2549020712800 D2549020713000 D2549020713200 D2549020713400 D2549020713600

D2549020713800 D2549020714000 D2549020714400 D2549020714600 D2549020800000
D2549020800200 D2549020800400 D2549020800600 D2549020800800 D2549020801000
D2549020801200 D2549020801400 D2549020801600 D2549020801800 D2549020802000
D2549020802200 D2549020802400 D2549020802600 D2549020802800 D2549020803000
D2549020803200 D2549020803400 D2549020803600 D2549020803800 D2549020804000
D2549020804200 D2549020804400 D2549020804800 D2549020805000 D2549020805200
D2549020805400 D2549020805600 D2549020805800 D2549020806000 D2549020806200
D2549020806400 D2549020806600 D2549020806800 D2549020807000 D2549020807200
D2549020807400 D2549020807600 D2549020807800 D2549020808200 D2549020808400
D2549020808600 D2549020808800 D2549020809000 D2549020809400 D2549020809600
D2549020809800 D2549020810000 D2549020810200 D2549020810400 D2549020810600
D2549020810800 D2549020811200 D2549020811400 D2549020811600 D2549020811800
D2549020812000 D2549020812200 D2549020812400 D2549020812600 D2549020812800
D2549020813000 D2549020813200 D2549020813400 D2549020813600 D2549020813800
D2549020814000 D2549020814200 D2549020814400 D2549020814600 D2549020814800
D2549030400000 D2549030400200 D2549030400400 D2549030400600 D2549030401000
D2549030401200 D2549030401400 D2549030401600 D2549030401800 D2549030402000
D2549030402200 D2549030402400 D2549030402600 D2549030402800 D2549030403400
D2549030403600 D2549030403800 D2549030404000 D2549030404200 D2549030404400
D2549030404600 D2549030404800 D2549030405000 D2549030405200 D2549030405400
D2549030405600 D2549030405800 D2549030406000 D2549030406400 D2549030406600
D2549030406800 D2549030407000 D2549030407200 D2549030407400 D2549030407600
D2549030407800 D2549030408000 D2549030408200 D2549030408400 D2549030408600
D2549030409000 D2549030409200 D2549030409400 D2549030409600 D2549030409800
D2549030410000 D2549030410200 D2549030410400 D2549030410600 D2549030410800
D2549030411200 D2549030411400 D2549030411600 D2549030411800 D2549030412000
D2549030412200 D2549030412400 D2549030412600 D2549030412800 D2549030413000
D2549030413200 D2549030413400 D2549030413600 D2549030414000 D2549030414200
D2549030414400 D2549030414600 D2549030414800 D2549030500200 D2549030500400
D2549030500600 D2549030500800 D2549030501000 D2549030501200 D2549030501400
D2549030501600 D2549030501800 D2549030502000 D2549030502200 D2549030502400
D2549030502600 D2549030502800 D2549030503000 D2549030503200 D2549030503400
D2549030503600 D2549030503800 D2549030504000 D2549030504200 D2549030504600
D2549030504800 D2549030505200 D2549030505400 D2549030505600 D2549030505800
D2549030506000 D2549030506200 D2549030506400 D2549030506600 D2549030506800
D2549030507000 D2549030507200 D2549030507400 D2549030507600 D2549030507800
D2549030508000 D2549030508200 D2549030508400 D2549030508600 D2549030508800
D2549030509000 D2549030509200 D2549030509400 D2549030509600 D2549030509800
D2549030510000 D2549030510200 D2549030510400 D2549030510600 D2549030510800
D2549030511000 D2549030511200 D2549030511400 D2549030511600 D2549030511800
D2549030512000 D2549030512200 D2549030512400 D2549030512800 D2549030513000
D2549030513200 D2549030513400 D2549030513600 D2549030513800 D2549030514000
D2549030514200 D2549030514400 D2549030514600 D2549030514800 D2549030600000
D2549030600200 D2549030600400 D2549030600600 D2549030600800 D2549030601000
D2549030601200 D2549030601400 D2549030601600 D2549030601800 D2549030602000
D2549030602200 D2549030602400 D2549030602600 D2549030602800 D2549030603000
D2549030603200 D2549030603400 D2549030603600 D2549030603800 D2549030604200

D2549030604400 D2549030604600 D2549030604800 D2549030605000 D2549030605200
D2549030605400 D2549030605600 D2549030605800 D2549030606000 D2549030606200
D2549030606400 D2549030606600 D2549030606800 D2549030607000 D2549030607200
D2549030607400 D2549030607600 D2549030607800 D2549030608000 D2549030608200
D2549030608400 D2549030608600 D2549030608800 D2549030609000 D2549030609200
D2549030609800 D2549030610000 D2549030610200 D2549030610400 D2549030610600
D2549030611000 D2549030611200 D2549030611400 D2549030611600 D2549030611800
D2549030612000 D2549030612200 D2549030612400 D2549030612600 D2549030612800
D2549030613200 D2549030613400 D2549030613600 D2549030613800 D2549030614000
D2549030614200 D2549030614400 D2549030614600 D2549030614800 D2549030700000
D2549030700200 D2549030700400 D2549030700600 D2549030700800 D2549030701000
D2549030701200 D2549030701400 D2549030701600 D2549030701800 D2549030702000
D2549030702200 D2549030702400 D2549030702600 D2549030702800 D2549030703000
D2549030703200 D2549030703400 D2549030703600 D2549030703800 D2549030704000
D2549030704200 D2549030704400 D2549030704600 D2549030704800 D2549030705200
D2549030705600 D2549040500200 D2549040500400 D2549040500600 D2549040500800
D2549040501000 D2549040501200 D2549040501400 D2549040501600 D2549040501800
D2549040502000 R225401107-000 R225401107-002 R225401107-004 R225401115-000
R225401115-002 R225401128-000 R225401133-000 R225401134-000 R225401134-002
R225401134-004 R225401134-006 R225401134-008 R225401134-010 R225401134-012
R225401134-014 R225401134-016 R225401134-018 R225401134-020 R225401134-022
R225401134-024 R225401134-026 R225401134-028 R225401134-030 R225401134-032
R225401134-034 R225401134-036 R225401134-038 R225401136-000 R225401136-004
R225401136-006 R225401136-008 R225401136-010 R225401136-012 R225401136-014
R225401136-016 R225401136-018 R225401136-020 R225401136-022 R225401136-024
R225401137-000 R225401137-002 R225401137-004 R225401137-006 R225401137-008
R225401137-010 R225401137-012 R225401137-014 R225401137-016 R225401139-000
R225401142-000 R225401142-002 R225401145-000 R225401145-002 R225401145-004
R225401145-006 R225401145-008 R225401145-010 R225401145-012 R225401145-014
R225401146-000 R225401146-002 R225401152-000 R225401152-002 R225401152-004
R225401152-006 R225401152-008 R225401152-010 R225401153-000 R225401159-000
R225401160-000 R225401160-002 R225401168-000 R225401168-002 R225401168-004
R225401168-006 R225401168-008 R225401168-010 R225401168-012 R225401168-014
R225401168-016 R225401168-018 R225401168-020 R225401168-022 R225401168-024
R225401168-026 R225401168-028 R225401172-000 R225401172-002 R225401172-004
R225401172-006 R225401172-008 R225401172-010 R225401172-012 R225401172-014
R225401172-016 R225401172-018 R225401175-000 R225401175-002 R225401176-000
R225401183-000 R225401183-002 R225401183-004 R225401183-006 R225401183-008
R225401188-000 R225401188-002 R225401188-004 R225401188-006 R225401192-000
R225401192-002 R225401195-000 R225401196-000 R225401196-002 R225401196-004
R225401196-006 R225401196-008 R225401196-010 R225401196-012 R225401196-014
R225401196-016 R225401196-018 R225401196-020 R225401196-022 R225401196-024
R225401196-034 R225401196-036 R225401196-038 R225401196-040 R225401196-042
R225401196-044 R225401196-046 R225401196-048 R225401196-050 R225401196-052
R225401196-054 R225401196-056 R225401196-058 R225401196-060 R225401196-062
R225401196-064 R225401196-066 R225401196-068 R225401196-070 R225401199-000
R225401199-002 R225401199-004 R225401199-006 R225401199-010 R225401199-012

R225401600-000 R225401600-002 R225401600-004 R225401602-000 R225401603-000 R225401605-000 R225401605-002 R225401609-000 R225401611-000 R225401611-006 R225401611-008 R225401611-010 R225401611-012 R225401611-014 R225401611-016 R225401611-018 R225401611-020 R225401613-000 R225401614-000 R225401618-000 R225401618-002 R225401619-000 R225401619-002 R225401622-000 R225401622-002 R225401624-000 R225401625-000 R225401627-000 R225401627-002 R225401627-004 R225401629-000 R225401629-002 R225401639-000 R225401639-002 R225401643-000 R225401643-002 R225401643-004 R225401643-006 R225401643-008 R225401646-000 R225401646-002 R225401647-000 R225401648-000 R225401648-002 R225401648-004 R225401648-006 R225401648-008 R225401649-000 R225401656-000 R225401656-002 R225401658-000 R225401662-000 R225401662-002 R225401671-000 R225401671-002 R225401673-000 R225401673-002 R225401673-004 R225401673-006 R225401675-000 R225401676-000 R225401683-000 R225401685-000 R225401685-002 R225401688-000 R225401689-004 R225401689-006 R225401691-000 R225401691-002 R225401693-000 R225401697-000 R225401697-002 R225401803-000 R225401803-002 R225401808-000 R225401811-000 R225401814-000

158. Assembly and Installation of the External Waste Door

A. General

This task gives you the installation and assembly procedures of the component.

B. Procedure

WARNING: BE CAREFUL WHEN YOU USE SOLVENTS/CLEANING AGENTS, SEALANTS AND OTHER MATERIALS. OBEY THE MATERIAL MANUFACTURER'S INSTRUCTIONS AND THE LOCAL REGULATIONS. MAKE SURE THAT THERE IS A GOOD FLOW OF AIR THROUGH THE WORK AREA. DO NOT BREATHE THE FUMES. DO NOT SMOKE. DO NOT USE THESE MATERIALS NEAR A FLAME, SPARKS OR SOURCES OF HEAT. USE PROTECTIVE CLOTHING, GOGGLES AND GLOVES. IF YOU GET ONE OF THESE MATERIALS ON YOUR SKIN OR IN YOUR EYES, FLUSH IT AWAY WITH A FLOW OF CLEAN WATER. IF YOU GET ONE OF THESE MATERIALS IN YOUR MOUTH, GET IMMEDIATE MEDICAL AID. IN GENERAL, THESE MATERIALS ARE POISONOUS, FLAMMABLE AND SKIN IRRITANTS.

CAUTION: DO ALL THE WORK ON A CLEAN, SOFT SURFACE TO PREVENT DAMAGE TO THE COMPONENTS.

CAUTION: MAKE SURE THAT ALL THE PARTS ARE CLEAN BEFORE YOU ASSEMBLE THEM.

SUB TASK 25-41-51-400-069-A01
D2549020802800

1. Assembly and Installation of the External Waste Door (09-1)

   (a) Attach the sections 09-130, 09-140 with the screws 09-160 to the lavatory structure.

   (b) Install and assemble the waste container door assembly 09-010 as follows:

      1 Attach the latch 09-060 and the mounting plate 09-070 with the screws 09-080.

      2 Attach the sections 09-100, 09-110 with the screws 09-120.

      3 Assemble the hinge 09-020 as follows:
      a

         WARNING: BE VERY CAREFUL WHEN YOU REMOVE OR INSTALL THE SPRING. BECAUSE THERE IS REMAINING TENSION IN THE SPRING, IT CAN CAUSE YOU INJURY.

         Attach the springs 09-040 to the hinge 09-030.

      4 Attach the hinge 09-020 with the screws 09-050.

      5 Attach the waste container door assembly 09-010 with the screws 09-150 to the lavatory structure.

SUB TASK 25-41-51-400-069-B01
D2547160900200 D2547160900400 D2547161903000 D2549010400000
D2549010400200 D2549010400400 D2549010400600 D2549010400800
D2549010401000 D2549010401400 D2549010401600 D2549010401800
D2549010402000 D2549010402200 D2549010402400 D2549010402600
D2549010402800 D2549010403000 D2549010403200 D2549010403400
D2549010403600 D2549010403800 D2549010404000 D2549010404200
D2549010404400 D2549010404600 D2549010404800 D2549010405000
D2549010405200 D2549010405400 D2549010405600 D2549010405800
D2549010406000 D2549010406200 D2549010406400 D2549010406800
D2549010407000 D2549010500000 D2549010500400 D2549010500600
D2549010500800 D2549010501000 D2549010501200 D2549010501400
D2549010501600 D2549010501800 D2549010502000 D2549010502200
D2549010502400 D2549010502600 D2549010502800 D2549010503200
D2549010503400 D2549010503600 D2549010503800 D2549010504200
D2549010504400 D2549010504600 D2549010504800 D2549010505000

D2549010505200 D2549010505400 D2549010505600 D2549010505800
D2549010506000 D2549010506200 D2549010506400 D2549010506800
D2549010507000 D2549010507200 D2549010507400 D2549010507600
D2549010507800 D2549010508000 D2549010508200 D2549010508400
D2549010508600 D2549010508800 D2549010509000 D2549010509200
D2549010509400 D2549010509600 D2549010509800 D2549010510000
D2549010510200 D2549010510400 D2549010510600 D2549010510800
D2549010511000 D2549010511200 D2549010511400 D2549010511600
D2549010511800 D2549010512000 D2549010512200 D2549010512400
D2549010512600 D2549010513000 D2549010513200 D2549010513400
D2549010513600 D2549010513800 D2549010514000 D2549010514200
D2549010514400 D2549010514600 D2549010514800 D2549010600000
D2549010600200 D2549010600400 D2549010600600 D2549010600800
D2549010601000 D2549010601200 D2549010601400 D2549010601600
D2549010601800 D2549010602000 D2549010602200 D2549010602400
D2549010602600 D2549010602800 D2549010603000 D2549010603200
D2549010603400 D2549010603600 D2549010603800 D2549010604000
D2549010604200 D2549010604400 D2549010604600 D2549010604800
D2549010605000 D2549010605200 D2549010605600 D2549010605800
D2549010606000 D2549010606200 D2549010606400 D2549010606600
D2549010606800 D2549010607000 D2549010607200 D2549010607400
D2549010607600 D2549010607800 D2549010608200 D2549010608400
D2549010608600 D2549010608800 D2549010609000 D2549010609200
D2549010609400 D2549010609600 D2549010609800 D2549010610000
D2549010610200 D2549010610400 D2549010610600 D2549010610800
D2549010611000 D2549010611200 D2549010611400 D2549010611600
D2549010611800 D2549010612000 D2549010612200 D2549010612400
D2549010612600 D2549010613000 D2549010613200 D2549010613400
D2549010613600 D2549010613800 D2549010614200 D2549010614400
D2549010614600 D2549010614800 D2549020300000 D2549020300400
D2549020300600 D2549020300800 D2549020301000 D2549020301600
D2549020301800 D2549020302000 D2549020302800 D2549020400000
D2549020400200 D2549020400400 D2549020400600 D2549020400800
D2549020401000 D2549020401200 D2549020401400 D2549020401600
D2549020402000 D2549020402200 D2549020402400 D2549020402600
D2549020403000 D2549020403200 D2549020403400 D2549020403600
D2549020403800 D2549020404000 D2549020404200 D2549020404400
D2549020404600 D2549020404800 D2549020405000 D2549020405200
D2549020405400 D2549020405600 D2549020405800 D2549020406000
D2549020406200 D2549020406400 D2549020406600 D2549020406800
D2549020407000 D2549020407200 D2549020407400 D2549020407600
D2549020407800 D2549020408000 D2549020408200 D2549020408600
D2549020408800 D2549020409000 D2549020409200 D2549020409400
D2549020409600 D2549020409800 D2549020410200 D2549020410400
D2549020410600 D2549020410800 D2549020411000 D2549020411200
D2549020411400 D2549020411600 D2549020411800 D2549020412000
D2549020412200 D2549020412400 D2549020412600 D2549020412800

D2549020413000 D2549020413200 D2549020413400 D2549020413600
D2549020413800 D2549020414000 D2549020414200 D2549020414600
D2549020414800 D2549020500000 D2549020500200 D2549020500400
D2549020500600 D2549020500800 D2549020501000 D2549020501200
D2549020501400 D2549020501600 D2549020501800 D2549020502000
D2549020502200 D2549020502400 D2549020502600 D2549020502800
D2549020503000 D2549020503200 D2549020503400 D2549020503600
D2549020503800 D2549020504000 D2549020504200 D2549020504400
D2549020504600 D2549020504800 D2549020505000 D2549020505200
D2549020505400 D2549020505600 D2549020505800 D2549020506000
D2549020506200 D2549020506400 D2549020506600 D2549020506800
D2549020507000 D2549020507200 D2549020507400 D2549020507600
D2549020507800 D2549020508000 D2549020508200 D2549020508400
D2549020508600 D2549020508800 D2549020509000 D2549020509200
D2549020509600 D2549020509800 D2549020510000 D2549020510400
D2549020510600 D2549020510800 D2549020511000 D2549020511200
D2549020511600 D2549020511800 D2549020512000 D2549020512200
D2549020512400 D2549020512600 D2549020512800 D2549020513000
D2549020513200 D2549020513400 D2549020513600 D2549020513800
D2549020514000 D2549020514200 D2549020514400 D2549020514600
D2549020514800 D2549020600000 D2549020600200 D2549020600400
D2549020600800 D2549020601000 D2549020601200 D2549020601400
D2549020601600 D2549020601800 D2549020602000 D2549020602200
D2549020602400 D2549020602600 D2549020602800 D2549020603000
D2549020603200 D2549020603400 D2549020603600 D2549020603800
D2549020604000 D2549020604200 D2549020604400 D2549020604600
D2549020604800 D2549020605000 D2549020605200 D2549020605400
D2549020605600 D2549020605800 D2549020606000 D2549020606400
D2549020606600 D2549020606800 D2549020607000 D2549020607200
D2549020607400 D2549020607600 D2549020607800 D2549020608200
D2549020608400 D2549020608600 D2549020608800 D2549020609000
D2549020609200 D2549020609400 D2549020609600 D2549020609800
D2549020610000 D2549020610200 D2549020610400 D2549020610600
D2549020610800 D2549020611000 D2549020611200 D2549020611400
D2549020611600 D2549020611800 D2549020612000 D2549020612200
D2549020612400 D2549020612600 D2549020612800 D2549020613000
D2549020613200 D2549020613600 D2549020614000 D2549020614400
D2549020614600 D2549020614800 D2549020700000 D2549020700200
D2549020700400 D2549020700600 D2549020700800 D2549020701000
D2549020701200 D2549020701400 D2549020701600 D2549020701800
D2549020702000 D2549020702200 D2549020702400 D2549020702600
D2549020702800 D2549020703200 D2549020703400 D2549020703600
D2549020703800 D2549020704000 D2549020704200 D2549020704400
D2549020704600 D2549020704800 D2549020705000 D2549020705200
D2549020705400 D2549020705600 D2549020705800 D2549020706000
D2549020706200 D2549020706400 D2549020706600 D2549020706800
D2549020707000 D2549020707200 D2549020707400 D2549020707600

D2549020707800 D2549020708000 D2549020708200 D2549020708400
D2549020708600 D2549020708800 D2549020709000 D2549020709200
D2549020709400 D2549020709600 D2549020709800 D2549020710000
D2549020710200 D2549020710400 D2549020710600 D2549020710800
D2549020711000 D2549020711200 D2549020711400 D2549020711600
D2549020712000 D2549020712200 D2549020712400 D2549020712600
D2549020712800 D2549020713000 D2549020713200 D2549020713400
D2549020713600 D2549020713800 D2549020714000 D2549020714400
D2549020714600 D2549020800000 D2549020800200 D2549020800400
D2549020800600 D2549020800800 D2549020801000 D2549020801200
D2549020801400 D2549020801600 D2549020801800 D2549020802000
D2549020802200 D2549020802400 D2549020802600 D2549020803000
D2549020803200 D2549020803400 D2549020803600 D2549020803800
D2549020804000 D2549020804200 D2549020804400 D2549020804800
D2549020805000 D2549020805200 D2549020805400 D2549020805600
D2549020805800 D2549020806000 D2549020806200 D2549020806400
D2549020806600 D2549020806800 D2549020807000 D2549020807200
D2549020807400 D2549020807600 D2549020807800 D2549020808200
D2549020808400 D2549020808600 D2549020808800 D2549020809000
D2549020809400 D2549020809600 D2549020809800 D2549020810000
D2549020810200 D2549020810400 D2549020810600 D2549020810800
D2549020811200 D2549020811400 D2549020811600 D2549020811800
D2549020812000 D2549020812200 D2549020812400 D2549020812600
D2549020812800 D2549020813000 D2549020813200 D2549020813400
D2549020813600 D2549020813800 D2549020814000 D2549020814200
D2549020814400 D2549020814600 D2549020814800 D2549030400000
D2549030400200 D2549030400400 D2549030400600 D2549030401000
D2549030401200 D2549030401400 D2549030401600 D2549030401800
D2549030402000 D2549030402200 D2549030402400 D2549030402600
D2549030402800 D2549030403000 D2549030403400 D2549030403600
D2549030403800 D2549030404000 D2549030404200 D2549030404400
D2549030404600 D2549030404800 D2549030405000 D2549030405200
D2549030405400 D2549030405600 D2549030405800 D2549030406000
D2549030406400 D2549030406600 D2549030406800 D2549030407000
D2549030407200 D2549030407400 D2549030407600 D2549030407800
D2549030408000 D2549030408200 D2549030408400 D2549030408600
D2549030409000 D2549030409200 D2549030409400 D2549030409600
D2549030409800 D2549030410000 D2549030410200 D2549030410400
D2549030410600 D2549030410800 D2549030411200 D2549030411400
D2549030411600 D2549030411800 D2549030412000 D2549030412200
D2549030412400 D2549030412600 D2549030412800 D2549030413000
D2549030413200 D2549030413400 D2549030413600 D2549030414000
D2549030414200 D2549030414400 D2549030414600 D2549030414800
D2549030500200 D2549030500400 D2549030500600 D2549030500800
D2549030501000 D2549030501200 D2549030501400 D2549030501600
D2549030501800 D2549030502000 D2549030502200 D2549030502400
D2549030502600 D2549030502800 D2549030503000 D2549030503200

D2549030503400 D2549030503600 D2549030503800 D2549030504000
D2549030504200 D2549030504600 D2549030504800 D2549030505200
D2549030505400 D2549030505600 D2549030505800 D2549030506000
D2549030506200 D2549030506400 D2549030506600 D2549030506800
D2549030507000 D2549030507200 D2549030507400 D2549030507600
D2549030507800 D2549030508000 D2549030508200 D2549030508400
D2549030508600 D2549030508800 D2549030509000 D2549030509200
D2549030509400 D2549030509600 D2549030509800 D2549030510000
D2549030510200 D2549030510400 D2549030510600 D2549030510800
D2549030511000 D2549030511200 D2549030511400 D2549030511600
D2549030511800 D2549030512000 D2549030512200 D2549030512400
D2549030512800 D2549030513000 D2549030513200 D2549030513400
D2549030513600 D2549030513800 D2549030514000 D2549030514200
D2549030514400 D2549030514600 D2549030514800 D2549030600000
D2549030600200 D2549030600400 D2549030600600 D2549030600800
D2549030601000 D2549030601200 D2549030601400 D2549030601600
D2549030601800 D2549030602000 D2549030602200 D2549030602400
D2549030602600 D2549030602800 D2549030603000 D2549030603200
D2549030603400 D2549030603600 D2549030603800 D2549030604200
D2549030604400 D2549030604600 D2549030604800 D2549030605000
D2549030605200 D2549030605400 D2549030605600 D2549030605800
D2549030606000 D2549030606200 D2549030606400 D2549030606600
D2549030606800 D2549030607000 D2549030607200 D2549030607400
D2549030607600 D2549030607800 D2549030608000 D2549030608200
D2549030608400 D2549030608600 D2549030608800 D2549030609000
D2549030609200 D2549030609800 D2549030610000 D2549030610200
D2549030610400 D2549030610600 D2549030611000 D2549030611200
D2549030611400 D2549030611600 D2549030611800 D2549030612000
D2549030612200 D2549030612400 D2549030612600 D2549030612800
D2549030613200 D2549030613400 D2549030613600 D2549030613800
D2549030614000 D2549030614200 D2549030614400 D2549030614600
D2549030614800 D2549030700000 D2549030700200 D2549030700400
D2549030700600 D2549030700800 D2549030701000 D2549030701200
D2549030701400 D2549030701600 D2549030701800 D2549030702000
D2549030702200 D2549030702400 D2549030702600 D2549030702800
D2549030703000 D2549030703200 D2549030703400 D2549030703600
D2549030703800 D2549030704000 D2549030704200 D2549030704400
D2549030704600 D2549030704800 D2549030705200 D2549030705600
D2549040500200 D2549040500400 D2549040500600 D2549040500800
D2549040501000 D2549040501200 D2549040501400 D2549040501600
D2549040501800 D2549040502000 R225401107-000 R225401107-002 R225401107-
004 R225401115-000 R225401115-002 R225401128-000 R225401133-000 R225401134-
000 R225401134-002 R225401134-004 R225401134-006 R225401134-008 R225401134-
010 R225401134-012 R225401134-014 R225401134-016 R225401134-018 R225401134-
020 R225401134-022 R225401134-024 R225401134-026 R225401134-028 R225401134-
030 R225401134-032 R225401134-034 R225401134-036 R225401134-038 R225401136-
000 R225401136-004 R225401136-006 R225401136-008 R225401136-010 R225401136-

012 R225401136-014 R225401136-016 R225401136-018 R225401136-020 R225401136-022 R225401136-024 R225401137-000 R225401137-002 R225401137-004 R225401137-006 R225401137-008 R225401137-010 R225401137-012 R225401137-014 R225401137-016 R225401139-000 R225401142-000 R225401142-002 R225401145-000 R225401145-002 R225401145-004 R225401145-006 R225401145-008 R225401145-010 R225401145-012 R225401145-014 R225401146-000 R225401146-002 R225401152-000 R225401152-002 R225401152-004 R225401152-006 R225401152-008 R225401152-010 R225401153-000 R225401159-000 R225401160-000 R225401160-002 R225401168-000 R225401168-002 R225401168-004 R225401168-006 R225401168-008 R225401168-010 R225401168-012 R225401168-014 R225401168-016 R225401168-018 R225401168-020 R225401168-022 R225401168-024 R225401168-026 R225401168-028 R225401172-000 R225401172-002 R225401172-004 R225401172-006 R225401172-008 R225401172-010 R225401172-012 R225401172-014 R225401172-016 R225401172-018 R225401175-000 R225401175-002 R225401176-000 R225401183-000 R225401183-002 R225401183-004 R225401183-006 R225401183-008 R225401188-000 R225401188-002 R225401188-004 R225401188-006 R225401192-000 R225401192-002 R225401195-000 R225401196-000 R225401196-002 R225401196-004 R225401196-006 R225401196-008 R225401196-010 R225401196-012 R225401196-014 R225401196-016 R225401196-018 R225401196-020 R225401196-022 R225401196-024 R225401196-034 R225401196-036 R225401196-038 R225401196-040 R225401196-042 R225401196-044 R225401196-046 R225401196-048 R225401196-050 R225401196-052 R225401196-054 R225401196-056 R225401196-058 R225401196-060 R225401196-062 R225401196-064 R225401196-066 R225401196-068 R225401196-070 R225401199-000 R225401199-002 R225401199-004 R225401199-006 R225401199-008 R225401199-010 R225401199-012 R225401600-000 R225401600-002 R225401600-004 R225401602-000 R225401603-000 R225401605-000 R225401605-002 R225401609-000 R225401611-000 R225401611-006 R225401611-008 R225401611-010 R225401611-012 R225401611-014 R225401611-016 R225401611-018 R225401611-020 R225401613-000 R225401614-000 R225401618-000 R225401618-002 R225401619-000 R225401619-002 R225401622-000 R225401622-002 R225401624-000 R225401625-000 R225401627-000 R225401627-002 R225401627-004 R225401629-000 R225401629-002 R225401639-000 R225401639-002 R225401643-000 R225401643-002 R225401643-004 R225401643-006 R225401643-008 R225401646-000 R225401646-002 R225401647-000 R225401648-000 R225401648-002 R225401648-004 R225401648-006 R225401648-008 R225401649-000 R225401656-000 R225401656-002 R225401658-000 R225401662-000 R225401662-002 R225401671-000 R225401671-002 R225401673-000 R225401673-002 R225401673-004 R225401673-006 R225401675-000 R225401676-000 R225401683-000 R225401685-000 R225401685-002 R225401688-000 R225401689-004 R225401689-006 R225401691-000 R225401691-002 R225401693-000 R225401697-000 R225401697-002 R225401803-000 R225401803-002 R225401808-000 R225401811-000 R225401814-000

2. Assembly and Installation of the External Waste Door

(a) Not applicable.

TASK 25-41-51-400-817-B01
D2549020613800

159. Assembly and Installation of the External Waste Door

A. General

- Not applicable

B. Procedure

SUB TASK 25-41-51-400-099-A01
1. Assembly and Installation of the External Waste Door

(a) Not applicable.

TASK 25-41-51-400-818-A01

D2549010500400 D2549010500600 D2549010501400 D2549010501600 D2549010501800 D2549010502200 D2549010502400 D2549010502600 D2549010502800 D2549010503200 D2549010503400 D2549010503600 D2549010503800 D2549010504600 D2549010505200 D2549010506000 D2549010506200 D2549010506400 D2549010507000 D2549010507200 D2549010507600 D2549020500000 D2549020500600 D2549020501000 D2549020501400 D2549020502400 D2549020502600 D2549020502800 D2549020503000 D2549020503200 D2549020504200 D2549020504400 D2549020504800 D2549020505000 D2549020505200 D2549020506000 D2549020600800 D2549020602000 R225401115-002 R225401146-000 R225401146-002

160. Installation of the Housing

A. General

This task gives you the installation and assembly procedures of the component.

B. Procedure

WARNING: BE CAREFUL WHEN YOU USE SOLVENTS/CLEANING AGENTS, SEALANTS AND OTHER MATERIALS. OBEY THE MATERIAL MANUFACTURER'S INSTRUCTIONS AND THE LOCAL REGULATIONS. MAKE SURE THAT THERE IS A GOOD FLOW OF AIR THROUGH THE WORK AREA. DO NOT BREATHE THE FUMES. DO NOT SMOKE. DO NOT USE THESE MATERIALS NEAR A FLAME, SPARKS OR SOURCES OF HEAT. USE PROTECTIVE CLOTHING, GOGGLES AND GLOVES. IF YOU GET ONE OF THESE MATERIALS ON YOUR SKIN OR IN YOUR EYES, FLUSH IT AWAY WITH A FLOW OF CLEAN WATER. IF YOU GET ONE OF THESE MATERIALS IN YOUR MOUTH, GET IMMEDIATE MEDICAL AID. IN GENERAL, THESE MATERIALS ARE POISONOUS, FLAMMABLE AND SKIN IRRITANTS.

CAUTION: DO ALL THE WORK ON A CLEAN, SOFT SURFACE TO PREVENT DAMAGE TO THE COMPONENTS.

CAUTION: MAKE SURE THAT ALL THE PARTS ARE CLEAN BEFORE YOU ASSEMBLE THEM.

SUB TASK 25-41-51-400-129-A01

1. Installation of the Housing (07-1)

(a) Attach the fittings 07-060 with the screws 07-070.

(b) Attach the screws 07-170 to the housing assembly 07-010.

(c) Attach the glass mirror 07-150 to the screws 07-170.

(d) Attach the stud 07-160 to the housing assembly 07-010.

(e) Attach the housing assembly 07-010 with the screw 07-220 and the washer 07-230 to the lavatory structure.

TASK 25-41-51-400-818-B01
D2549010501000 D2549010502000 D2549010504200 D2549010505000 D2549010505600 D2549010505800 D2549010507800 D2549010510200 D2549010511200 D2549010512600 D2549010601800 D2549020501600 D2549020503400 D2549020503800 D2549020504000 D2549020505400 D2549020505800 D2549020600000 D2549020600200 D2549020600400 D2549030500200 D2549030500600 D2549030500800 D2549030501400 D2549030501600 D2549030502000 D2549030502200 D2549030502800 D2549030503000 D2549030503200 D2549030509000 R225401107-000 R225401107-002 R225401107-004 R225401128-000 R225401188-004

161. Installation of the Housing

A. General

This task gives you the installation and assembly procedures of the component.

B. Procedure

WARNING: BE CAREFUL WHEN YOU USE SOLVENTS/CLEANING AGENTS, SEALANTS AND OTHER MATERIALS. OBEY THE MATERIAL MANUFACTURER'S INSTRUCTIONS AND THE LOCAL REGULATIONS. MAKE SURE THAT THERE IS A GOOD FLOW OF AIR THROUGH THE WORK AREA. DO NOT BREATHE THE FUMES. DO NOT SMOKE. DO NOT USE THESE MATERIALS NEAR A FLAME, SPARKS OR SOURCES OF HEAT. USE PROTECTIVE CLOTHING, GOGGLES AND GLOVES. IF YOU GET ONE OF THESE MATERIALS ON YOUR SKIN OR IN YOUR EYES, FLUSH IT AWAY WITH A FLOW OF CLEAN WATER. IF YOU GET ONE OF THESE MATERIALS IN YOUR MOUTH, GET IMMEDIATE MEDICAL AID. IN GENERAL, THESE MATERIALS ARE POISONOUS, FLAMMABLE AND SKIN IRRITANTS.

CAUTION: DO ALL THE WORK ON A CLEAN, SOFT SURFACE TO PREVENT DAMAGE TO THE COMPONENTS.

CAUTION: MAKE SURE THAT ALL THE PARTS ARE CLEAN BEFORE YOU ASSEMBLE THEM.

SUB TASK 25-41-51-400-130-A01
D2549010501000 D2549010502000 D2549010510200 D2549010511200 D2549010512600 D2549010601800 D2549020501600 D2549020503400 D2549020503800 D2549020505400 D2549020505800 D2549030500200 D2549030501600 D2549030502200 D2549030503200 D2549030509000 R225401107-000 R225401107-002 R225401107-004

1. Installation of the Housing (07A-1)

(a) Attach the fittings 07A-060 with the screws 07A-070.

(b) Attach the armor plates 07A-053, 07A-055 with the screws 07A-057 to the housing assembly 07A-010.

(c) Attach the screws 07A-170 to the housing assembly 07A-010.

(d) Attach the glass mirror 07A-150 to the screws 07A-170.

(e) Attach the stud 07A-160 to the housing assembly 07A-010.

(f) Attach the housing assembly 07A-010 with the screw 07A-260 and the washer 07A-270 to the lavatory structure.

SUB TASK 25-41-51-400-130-B01
D2549010504200 D2549010505000 D2549010505800 D2549020504000 D2549020600000 D2549020600200 D2549020600400 D2549030500600 D2549030500800 D2549030501400 D2549030502000 D2549030502800 D2549030503000 R225401128-000 R225401188-004

2. Installation of the Housing (07A-1)

(a) Attach the fittings 07A-060 with the screws 07A-070.

(b) Attach the screws 07A-170 to the housing assembly 07A-010.

(c) Attach the glass mirror 07A-150 to the screws 07A-170.

(d) Attach the stud 07A-160 to the housing assembly 07A-010.

(e) Attach the housing assembly 07A-010 with the screw 07A-260 and the washer 07A-270 to the lavatory structure.

SUB TASK 25-41-51-400-130-C01
D2549010505600 D2549010507800

3. Installation of the Housing (07A-1)

(a) Attach the fittings 07A-060 with the screws 07A-070.

(b) Attach the cosmetics holder 07A-280 with the screws 07A-290, 07A-300, the washers 07A-310 and the nuts 07A-320.

(c) Attach the screws 07A-170 to the housing assembly 07A-010.

(d) Attach the glass mirror 07A-150 to the screws 07A-170.

(e) Attach the stud 07A-160 to the housing assembly 07A-010.

(f) Attach the housing assembly 07A-010 with the screw 07A-260 and the washer 07A-270 to the lavatory structure.

TASK 25-41-51-400-818-C01

D2549010500000 D2549010500800 D2549010501200 D2549010508400 D2549010508800 D2549010510800 D2549010511000 D2549010512400 D2549010514800 D2549010603800 D2549010604200 D2549010606200 D2549020402000 D2549020500200 D2549020500400 D2549020500800 D2549020501200 D2549020501800 D2549020502000 D2549020509200 D2549020601200 D2549020601800 D2549020603400 D2549020603800 D2549020606600 D2549020610600 D2549020611000 D2549020700200 D2549020701800 D2549020702400 D2549020703200 D2549020704800 D2549020708200 D2549030501800 D2549030502400 D2549030504800 D2549030505200 D2549030506400 D2549030508800 D2549030509200 D2549030510400 D2549030513600 R225401137-000 R225401137-002 R225401137-004 R225401137-006 R225401137-008 R225401137-010 R225401137-012 R225401137-014 R225401153-000 R225401176-000 R225401600-000 R225401600-002

162. Installation of the Housing

A. General

This task gives you the installation and assembly procedures of the component.

B. Procedure

WARNING: BE CAREFUL WHEN YOU USE SOLVENTS/CLEANING AGENTS, SEALANTS AND OTHER MATERIALS. OBEY THE MATERIAL MANUFACTURER'S INSTRUCTIONS AND THE LOCAL REGULATIONS. MAKE SURE THAT THERE IS A GOOD FLOW OF AIR THROUGH THE WORK AREA. DO NOT BREATHE THE FUMES. DO NOT SMOKE. DO NOT USE THESE MATERIALS NEAR A FLAME, SPARKS OR SOURCES OF HEAT. USE PROTECTIVE CLOTHING, GOGGLES AND GLOVES. IF YOU GET ONE OF THESE MATERIALS ON YOUR SKIN OR IN YOUR EYES, FLUSH IT AWAY WITH A FLOW OF CLEAN WATER. IF YOU GET ONE OF THESE MATERIALS IN YOUR MOUTH, GET IMMEDIATE MEDICAL AID. IN GENERAL, THESE MATERIALS ARE POISONOUS, FLAMMABLE AND SKIN IRRITANTS.

CAUTION: DO ALL THE WORK ON A CLEAN, SOFT SURFACE TO PREVENT DAMAGE TO THE COMPONENTS.

CAUTION: MAKE SURE THAT ALL THE PARTS ARE CLEAN BEFORE YOU ASSEMBLE THEM.

SUB TASK 25-41-51-400-131-A01

D2549010500000 D2549010500800 D2549010501200 D2549010508400 D2549010508800 D2549010510800 D2549010511000 D2549010512400 D2549010514800 D2549010603800 D2549010604200 D2549020402000 D2549020500200 D2549020500400 D2549020500800 D2549020501200 D2549020501800 D2549020502000 D2549020509200 D2549020601200 D2549020601800 D2549020603400 D2549020603800 D2549020610600

D2549020611000 D2549020700200 D2549020701800 D2549020702400 D2549020703200 D2549020704800 D2549020708200 D2549030501800 D2549030502400 D2549030504800 D2549030505200 D2549030506400 D2549030508800 D2549030509200 D2549030510400 D2549030513600 R225401137-000 R225401137-002 R225401137-004 R225401137-006 R225401137-008 R225401137-010 R225401137-012 R225401137-014 R225401153-000 R225401176-000 R225401600-000 R225401600-002

1. Installation of the Housing (07B-1)

   (a) Attach the fittings 07B-060 with the screws 07B-070.

   (b) Attach the screws 07B-160 to the housing assembly 07B-010.

   (c) Attach the glass mirror 07B-140 to the screws 07B-160.

   (d) Attach the stud 07B-150 to the housing assembly 07B-010.

   (e) Attach the housing assembly 07B-010 with the screw 07B-190 and the washer 07B-200 to the lavatory structure.

SUB TASK 25-41-51-400-131-B01
D2549020606600

2. Installation of the Housing (07B-1)

   (a) Attach the fittings 07B-060 with the screws 07B-070.

   (b) Attach the armor plates 07B-053, 07B-055 with the screws 07B-057 to the housing assembly 07B-010.

   (c) Attach the screws 07B-160 to the housing assembly 07B-010.

   (d) Attach the glass mirror 07B-140 to the screws 07B-160.

   (e) Attach the stud 07B-150 to the housing assembly 07B-010.

   (f) Attach the housing assembly 07B-010 with the screw 07B-190 and the washer 07B-200 to the lavatory structure.

SUB TASK 25-41-51-400-131-C01
D2549010606200

3. Installation of the Housing (07B-1)

(a) Attach the fittings 07B-060 with the screws 07B-070.

(b) Attach the screws 07B-160 to the housing assembly 07B-010.

(c) Attach the glass mirror 07B-140 to the screws 07B-160.

(d) Attach the stud 07B-150 to the housing assembly 07B-010.

(e) Attach the housing assembly 07B-010 with the screw 07B-190 to the lavatory structure.

TASK 25-41-51-400-818-D01

D2549010506800 D2549010508000 D2549010509200 D2549010511400 D2549010513400 D2549010607400 D2549020602600 D2549020602800 D2549020603600 D2549020604000 D2549020607200 D2549020609200 D2549020609400 D2549020612000 D2549020612600 D2549020702800 D2549020704600 D2549020707600 D2549030502600 D2549030506000 D2549030508400 D2549030509800 D2549030510000 D2549030601400 D2549030602200 D2549030604400 D2549030608200 R225401134-000 R225401160-000 R225401160-002 R225401172-006 R225401188-006

163. Installation of the Housing

A. General

This task gives you the installation and assembly procedures of the component.

B. Procedure

WARNING: BE CAREFUL WHEN YOU USE SOLVENTS/CLEANING AGENTS, SEALANTS AND OTHER MATERIALS. OBEY THE MATERIAL MANUFACTURER'S INSTRUCTIONS AND THE LOCAL REGULATIONS. MAKE SURE THAT THERE IS A GOOD FLOW OF AIR THROUGH THE WORK AREA. DO NOT BREATHE THE FUMES. DO NOT SMOKE. DO NOT USE THESE MATERIALS NEAR A FLAME, SPARKS OR SOURCES OF HEAT. USE PROTECTIVE CLOTHING, GOGGLES AND GLOVES. IF YOU GET ONE OF THESE MATERIALS ON YOUR SKIN OR IN YOUR EYES, FLUSH IT AWAY WITH A FLOW OF CLEAN WATER. IF YOU GET ONE OF THESE MATERIALS IN YOUR MOUTH, GET IMMEDIATE MEDICAL AID. IN GENERAL, THESE MATERIALS ARE POISONOUS, FLAMMABLE AND SKIN IRRITANTS.

CAUTION: DO ALL THE WORK ON A CLEAN, SOFT SURFACE TO PREVENT DAMAGE TO THE COMPONENTS.

CAUTION: MAKE SURE THAT ALL THE PARTS ARE CLEAN BEFORE YOU ASSEMBLE THEM.

SUB TASK 25-41-51-400-132-A01

1. Installation of the Housing (07C-1)

(a) Attach the fittings 07C-060 with the screws 07C-070.

(b) Attach the screws 07C-150 to the housing assembly 07C-010.

(c) Attach the glass mirror 07C-130 to the screws 07C-150.

(d) Attach the stud 07C-140 to the housing assembly 07C-010.

(e) Attach the housing assembly 07C-010 with the screw 07C-210 and the washer 07C-220 to the lavatory structure.

TASK 25-41-51-400-818-E01

D2549010509400 D2549010509800 D2549010510000 D2549010510400 D2549010511600 D2549010512000 D2549010512200 D2549010514400 D2549010600000 D2549010600800 D2549010602400 D2549010605000 D2549020506200 D2549020506400 D2549020507000 D2549020507200 D2549020508200 D2549020509800 D2549020512800 D2549020514000 D2549020602200 D2549020604200 D2549020604400 D2549020605600 D2549020607600 D2549020608200 D2549020609000 D2549020609800 D2549020610000 D2549020610400 D2549020611200 D2549020611400 D2549020612800 D2549020613600 D2549020614400 D2549020700800 D2549020701000 D2549020702600 D2549020704000 D2549020704200 D2549020704400 D2549020706200 D2549020706800 D2549020709600 D2549020710800 D2549020711000 D2549020711200 D2549020712200 D2549020713600 D2549020714600 D2549030504000 D2549030504600 D2549030505400 D2549030505600 D2549030505800 D2549030506600 D2549030506800 D2549030507800 D2549030508000 D2549030509400 D2549030509600 D2549030513000 D2549030513800 D2549030514000 D2549030514200 D2549030514400 D2549030600600 D2549030601200 D2549030601800 D2549030602800 D2549030603400 D2549030603800 D2549030604800 D2549030605200 D2549030605400 D2549030605800 D2549030606200 D2549030607000 D2549030607400 D2549030607600 D2549030608800 D2549030609200 R225401134-002 R225401134-004 R225401134-006 R225401134-008 R225401134-010 R225401134-016 R225401134-018 R225401134-020 R225401134-022 R225401134-024 R225401142-000 R225401142-002 R225401145-004 R225401172-012 R225401172-014 R225401605-000

164. Installation of the Housing

A. General

This task gives you the installation and assembly procedures of the component.

B. Job Set-up Information

(1) Not applicable

C. Procedure

WARNING: BE CAREFUL WHEN YOU USE SOLVENTS/CLEANING AGENTS, SEALANTS AND OTHER MATERIALS. OBEY THE MATERIAL MANUFACTURER'S INSTRUCTIONS AND THE LOCAL REGULATIONS. MAKE SURE THAT THERE IS A GOOD FLOW OF AIR THROUGH THE WORK AREA. DO NOT BREATHE THE FUMES. DO NOT SMOKE. DO NOT USE THESE MATERIALS NEAR A FLAME, SPARKS OR SOURCES OF HEAT. USE PROTECTIVE CLOTHING, GOGGLES AND GLOVES. IF YOU GET ONE OF THESE MATERIALS ON YOUR SKIN OR IN YOUR EYES, FLUSH IT AWAY WITH A FLOW OF CLEAN WATER. IF YOU GET ONE OF THESE MATERIALS IN YOUR MOUTH, GET IMMEDIATE MEDICAL AID. IN GENERAL, THESE MATERIALS ARE POISONOUS, FLAMMABLE AND SKIN IRRITANTS.

CAUTION: **DO ALL THE WORK ON A CLEAN, SOFT SURFACE TO PREVENT DAMAGE TO THE COMPONENTS.**

CAUTION: **MAKE SURE THAT ALL THE PARTS ARE CLEAN BEFORE YOU ASSEMBLE THEM.**

SUB TASK 25-41-51-410-017-A01

D2549010509400 D2549010509800 D2549010510000 D2549010510400 D2549010511600 D2549010512000 D2549010512200 D2549010514400 D2549010600000 D2549010600800 D2549010602400 D2549010605000 D2549020506200 D2549020506400 D2549020507000 D2549020507200 D2549020508200 D2549020509800 D2549020512800 D2549020514000 D2549020602200 D2549020604200 D2549020605600 D2549020607600 D2549020608200 D2549020609000 D2549020609800 D2549020610000 D2549020610400 D2549020611200 D2549020611400 D2549020612800 D2549020613600 D2549020614400 D2549020700800 D2549020701000 D2549020702600 D2549020704000 D2549020704200 D2549020704400 D2549020706200 D2549020706800 D2549020709600 D2549020710800 D2549020711000 D2549020711200 D2549020712200 D2549020713600 D2549020714600 D2549030504000 D2549030504600 D2549030505400 D2549030505600 D2549030505800 D2549030506600 D2549030506800 D2549030507800 D2549030508000 D2549030509400 D2549030509600 D2549030513000 D2549030513800 D2549030514000 D2549030514200 D2549030514400 D2549030600600 D2549030601200 D2549030601800 D2549030602800 D2549030603400 D2549030603800 D2549030604800 D2549030605200 D2549030605400 D2549030605800 D2549030606200 D2549030607000 D2549030607400 D2549030607600 D2549030608800 D2549030609200 R225401134-002 R225401134-004 R225401134-006 R225401134-008 R225401134-010 R225401134-016 R225401134-018 R225401134-020 R225401134-022 R225401134-024 R225401142-000 R225401142-002 R225401145-004 R225401172-012 R225401172-014 R225401605-000

1. Installation of the Housing (07D-1)

   (a) Attach the fittings 07D-060 with the screws 07D-070.

   (b) Attach the screws 07D-160 to the housing assembly 07D-010.

   (c) Attach the glass mirror 07D-140 to the screws 07D-160.

   (d) Attach the stud 07D-150 to the housing assembly 07D-010.

(e) Attach the housing assembly 07D-010 with the screw 07D-210 and the washer 07D-220 to the lavatory structure.

SUB TASK 25-41-51-410-017-B01
D2549020604400

2. Installation of the Housing (07D-1)

(a) Attach the fittings 07D-060 with the screws 07D-070.

(b) Attach the cosmetics holder 07D-230 with the screws 07D-240 and the washers 07D-250.

NOTE: For further instructions, see CMMV 25-20-08_C5307 (cosmetics holder).

(c) Attach the screws 07D-160 to the housing assembly 07D-010.

(d) Attach the glass mirror 07D-140 to the screws 07D-160.

(e) Attach the stud 07D-150 to the housing assembly 07D-010.

(f) Attach the housing assembly 07D-010 with the screw 07D-210 and the washer 07D-220 to the lavatory structure.

TASK 25-41-51-400-818-F01
D2549010513600 D2549010513800 D2549010514000 D2549010600200 D2549010601600 D2549010604000 D2549020506600 D2549020507800 D2549020605000 D2549020605400 D2549020605800 D2549020607400 D2549020608400 D2549020608600 D2549020610200 D2549020610800 D2549020611600 D2549020612200 D2549020613000 D2549020613800 D2549020614000 D2549020700000 D2549020702000 D2549020702200 D2549020705400 D2549020707400 D2549020708000 D2549020708400 D2549020709400 D2549030506200 D2549030507200 D2549030507400 D2549030507600 D2549030508600 D2549030510200 D2549030511800 D2549030600400 D2549030600800 D2549030601600 D2549030603000 D2549030603600 R225401136-016 R225401168-004 R225401168-006 R225401168-014 R225401168-016 R225401168-018 R225401168-028 R225401175-000 R225401175-002

165. Installation of the Housing

A. General

This task gives you the installation and assembly procedures of the component.

B. Job Set-up Information

(1) Not applicable

C. Procedure

WARNING: BE CAREFUL WHEN YOU USE SOLVENTS/CLEANING AGENTS, SEALANTS AND OTHER MATERIALS. OBEY THE MATERIAL MANUFACTURER'S INSTRUCTIONS AND THE LOCAL REGULATIONS. MAKE SURE THAT THERE IS A GOOD FLOW OF AIR THROUGH THE WORK AREA. DO NOT BREATHE THE FUMES. DO NOT SMOKE. DO NOT USE THESE MATERIALS NEAR A FLAME, SPARKS OR SOURCES OF HEAT. USE PROTECTIVE CLOTHING, GOGGLES AND GLOVES. IF YOU GET ONE OF THESE MATERIALS ON YOUR SKIN OR IN YOUR EYES, FLUSH IT AWAY WITH A FLOW OF CLEAN WATER. IF YOU GET ONE OF THESE MATERIALS IN YOUR MOUTH, GET IMMEDIATE MEDICAL AID. IN GENERAL, THESE MATERIALS ARE POISONOUS, FLAMMABLE AND SKIN IRRITANTS.

CAUTION: DO ALL THE WORK ON A CLEAN, SOFT SURFACE TO PREVENT DAMAGE TO THE COMPONENTS.

CAUTION: MAKE SURE THAT ALL THE PARTS ARE CLEAN BEFORE YOU ASSEMBLE THEM.

SUB TASK 25-41-51-410-018-A01
D2549010513600 D2549010513800 D2549010514000 D2549010600200 D2549010601600 D2549010604000 D2549020506600 D2549020507800 D2549020605000 D2549020605400 D2549020605800 D2549020607400

D2549020608400 D2549020610200 D2549020610800 D2549020611600 D2549020612200 D2549020613000 D2549020613800 D2549020614000 D2549020700000 D2549020702000 D2549020702200 D2549020705400 D2549020707400 D2549020708000 D2549020708400 D2549020709400 D2549030506200 D2549030507200 D2549030507400 D2549030507600 D2549030508600 D2549030510200 D2549030511800 D2549030600400 D2549030600800 D2549030601600 D2549030603000 D2549030603600 R225401136-016 R225401168-004 R225401168-006 R225401168-014 R225401168-016 R225401168-018 R225401168-028 R225401175-000 R225401175-002

1. Installation of the Housing (07E-1)

   (a) Attach the fittings 07E-060 with the screws 07E-070.

   (b) Attach the screws 07E-140 to the housing assembly 07E-010.

   (c) Attach the glass mirror 07E-120 to the screws 07E-140.

   (d) Attach the stud 07E-130 to the housing assembly 07E-010.

   (e) Attach the housing assembly 07E-010 with the screw 07E-190 and the washer 07E-200 to the lavatory structure.

SUB TASK 25-41-51-410-018-B01
D2549020608600

2. Installation of the Housing (07E-1)

   (a) Attach the fittings 07E-060 with the screws 07E-070.

   (b) Attach the cosmetics holder 07E-210 with the screws 07E-220 and the washers 07E-230.

   NOTE: For further instructions, see CMMV 25-20-08_C5307 (cosmetics holder).

   (c) Attach the screws 07E-140 to the housing assembly 07E-010.

   (d) Attach the glass mirror 07E-120 to the screws 07E-140.

   (e) Attach the stud 07E-130 to the housing assembly 07E-010.

   (f) Attach the housing assembly 07E-010 with the screw 07E-190 and the washer 07E-200 to the lavatory structure.

TASK 25-41-51-400-818-G01
D2549010600400 D2549010600600 D2549010601200 D2549010601400 D2549010602000 D2549010602200 D2549010602800 D2549010603200 D2549010604600 D2549010604800 D2549010606400 D2549010607800 D2549020506800 D2549020508000 D2549020508600 D2549020512600 D2549020604600 D2549020612400 D2549020614600 D2549020701400 D2549020703600 D2549020703800 D2549020706600 D2549020707000 D2549020709000 D2549020710200 D2549020710400 D2549020713800 D2549030510600 D2549030510800 D2549030511000 D2549030511400 D2549030512000 D2549030513400 D2549030514600 D2549030514800 D2549030605600 D2549030608600 D2549030610200 R225401136-000 R225401136-010 R225401136-020 R225401136-022 R225401183-000 R225401183-008 R225401603-000

166. Installation of the Housing

A. General

This task gives you the installation and assembly procedures of the component.

B. Job Set-up Information

(1) Not applicable

C. Procedure

WARNING: BE CAREFUL WHEN YOU USE SOLVENTS/CLEANING AGENTS, SEALANTS AND OTHER MATERIALS. OBEY THE MATERIAL MANUFACTURER'S INSTRUCTIONS AND THE LOCAL REGULATIONS. MAKE SURE THAT THERE IS A GOOD FLOW OF AIR THROUGH THE WORK AREA. DO NOT BREATHE THE FUMES. DO NOT SMOKE. DO NOT USE THESE MATERIALS NEAR A FLAME, SPARKS OR SOURCES OF HEAT. USE PROTECTIVE CLOTHING, GOGGLES AND GLOVES. IF YOU GET ONE OF THESE MATERIALS ON YOUR SKIN OR IN YOUR EYES, FLUSH IT AWAY WITH A FLOW OF CLEAN WATER. IF YOU GET ONE OF THESE MATERIALS IN YOUR MOUTH, GET IMMEDIATE MEDICAL AID. IN GENERAL, THESE MATERIALS ARE POISONOUS, FLAMMABLE AND SKIN IRRITANTS.

CAUTION: DO ALL THE WORK ON A CLEAN, SOFT SURFACE TO PREVENT DAMAGE TO THE COMPONENTS.

CAUTION: MAKE SURE THAT ALL THE PARTS ARE CLEAN BEFORE YOU ASSEMBLE THEM.

SUB TASK 25-41-51-410-019-A01
D2549010600400 D2549010600600 D2549010601200 D2549010601400 D2549010602000 D2549010602200 D2549010602800 D2549010603200 D2549010604600 D2549010604800 D2549010606400 D2549010607800

D2549020508000 D2549020508600 D2549020512600 D2549020612400 D2549020701400 D2549020706600 D2549020709000 D2549020710200 D2549020710400 D2549020713800 D2549030510600 D2549030510800 D2549030511000 D2549030511400 D2549030512000 D2549030513400 D2549030514600 D2549030514800 D2549030605600 D2549030608600 D2549030610200 R225401136-000 R225401136-010 R225401136-020 R225401136-022 R225401183-000 R225401183-008 R225401603-000

1. Installation of the Housing (07F-1)

   (a) Attach the fittings 07F-090 with the screws 07F-100.

   (b) Attach the screws 07F-170 to the housing assembly 07F-010.

   (c) Attach the glass mirror 07F-150 to the screws 07F-170.

   (d) Attach the stud 07F-160 to the housing assembly 07F-010.

   (e) Attach the housing assembly 07F-010 with the screw 07F-220 and the washer 07F-230 to the lavatory structure.

SUB TASK 25-41-51-410-019-B01
D2549020506800 D2549020604600 D2549020703600 D2549020703800

2. Installation of the Housing (07F-1)

   (a) Attach the fittings 07F-090 with the screws 07F-100.

   (b) Attach the armor plates 07F-060, 07F-070 with the screws 07F-080 to the housing assembly 07F-010.

   (c) Attach the screws 07F-170 to the housing assembly 07F-010.

   (d) Attach the glass mirror 07F-150 to the screws 07F-170.

   (e) Attach the stud 07F-160 to the housing assembly 07F-010.

   (f) Attach the housing assembly 07F-010 with the screw 07F-220 and the washer 07F-230 to the lavatory structure.

SUB TASK 25-41-51-410-019-C01
D2549020614600 D2549020707000

3. Installation of the Housing (07F-1)

(a) Attach the fittings 07F-090 with the screws 07F-100.

(b) Attach the cosmetics holder 07F-240 with the screws 07F-250 and the washers 07F-260.

NOTE: For further instructions, see CMMV 25-20-08_C5307 (cosmetics holder).

(c) Attach the screws 07F-170 to the housing assembly 07F-010.

(d) Attach the glass mirror 07F-150 to the screws 07F-170.

(e) Attach the stud 07F-160 to the housing assembly 07F-010.

(f) Attach the housing assembly 07F-010 with the screw 07F-220 and the washer 07F-230 to the lavatory structure.

TASK 25-41-51-400-818-H01

D2549010509000 D2549010513200 D2549010601000 D2549010602600 D2549010603600 D2549010605600 D2549010605800 D2549010606000 D2549010608200 D2549020507400 D2549020507600 D2549020508400 D2549020508800 D2549020512000 D2549020512200 D2549020514200 D2549020514600 D2549020703400 D2549020705000 D2549020705200 D2549020707200 D2549020708600 D2549020709800 D2549020710000 D2549020710600 D2549020711400 D2549020712400 D2549020712800 D2549020713200 D2549030511200 D2549030511600 D2549030512200 D2549030512800 D2549030600000 D2549030602000 D2549030602400 D2549030604200 D2549030604600 D2549030606400 D2549030606600 D2549030606800 R225401115-000 R225401152-000 R225401152-002 R225401152-004 R225401152-006 R225401172-008 R225401195-000 R225401196-000 R225401196-002 R225401196-004 R225401196-034 R225401196-036 R225401196-046 R225401196-048 R225401196-050 R225401618-000 R225401618-002 R225401619-002

167. Installation of the Housing

A. General

This task gives you the installation and assembly procedures of the component.

B. Procedure

WARNING: BE CAREFUL WHEN YOU USE SOLVENTS/CLEANING AGENTS, SEALANTS AND OTHER MATERIALS. OBEY THE MATERIAL MANUFACTURER'S INSTRUCTIONS AND THE LOCAL REGULATIONS. MAKE SURE THAT THERE IS A GOOD FLOW OF AIR THROUGH THE WORK AREA. DO NOT BREATHE THE FUMES. DO NOT SMOKE. DO NOT USE THESE MATERIALS NEAR A FLAME, SPARKS OR SOURCES OF HEAT. USE PROTECTIVE CLOTHING, GOGGLES AND GLOVES. IF YOU GET ONE OF THESE MATERIALS ON YOUR SKIN OR IN YOUR EYES, FLUSH IT AWAY WITH A FLOW OF CLEAN WATER. IF YOU GET ONE OF THESE MATERIALS IN YOUR MOUTH, GET IMMEDIATE MEDICAL AID. IN GENERAL, THESE MATERIALS ARE POISONOUS, FLAMMABLE AND SKIN IRRITANTS.

CAUTION: DO ALL THE WORK ON A CLEAN, SOFT SURFACE TO PREVENT DAMAGE TO THE COMPONENTS.

CAUTION: MAKE SURE THAT ALL THE PARTS ARE CLEAN BEFORE YOU ASSEMBLE THEM.

SUB TASK 25-41-51-400-133-A01

D2549010509000 D2549010513200 D2549010601000 D2549010602600 D2549010603600 D2549010605600 D2549010605800 D2549010606000 D2549010608200 D2549020507400 D2549020507600 D2549020508400 D2549020508800 D2549020512000 D2549020512200 D2549020514200 D2549020514600 D2549020703400 D2549020705000 D2549020705200

D2549020707200 D2549020708600 D2549020709800 D2549020710000 D2549020711400 D2549020712400 D2549020712800 D2549020713200 D2549030511600 D2549030512200 D2549030600000 D2549030602000 D2549030602400 D2549030604200 D2549030604600 D2549030606400 D2549030606600 D2549030606800 R225401115-000 R225401152-000 R225401152-002 R225401152-004 R225401152-006 R225401172-008 R225401195-000 R225401196-000 R225401196-002 R225401196-004 R225401196-034 R225401196-036 R225401196-046 R225401196-048 R225401196-050 R225401618-000 R225401618-002 R225401619-002

1. Installation of the Housing (07G-1)

   (a) Attach the fittings 07G-060 with the screws 07G-070.

   (b) Attach the screws 07G-150 to the housing assembly 07G-010.

   (c) Attach the glass mirror 07G-130 to the screws 07G-150.

   (d) Attach the stud 07G-140 to the housing assembly 07G-010.

   (e) Attach the housing assembly 07G-010 with the screw 07G-200 and the washer 07G-210 to the lavatory structure.

SUB TASK 25-41-51-400-133-B01
D2549020710600 D2549030511200 D2549030512800

2. Installation of the Housing (07G-1)

   (a) Attach the fittings 07G-060 with the screws 07G-070.

   (b) Attach the cosmetics holder 07G-250 and the spacer 07G-260 with the bolts 07G-270.

   (c) Attach the soap dispenser holder 07G-220 with the screws 07G-230 and the washers 07G-240.

   (d) Attach the screws 07G-150 to the housing assembly 07G-010.

   (e) Attach the glass mirror 07G-130 to the screws 07G-150.

   (f) Attach the stud 07G-140 to the housing assembly 07G-010.

   (g) Attach the housing assembly 07G-010 with the screw 07G-200 and the washer 07G-210 to the lavatory structure.

TASK 25-41-51-400-818-J01
D2549020712000 D2549020712600

168. Installation of the Housing

A. General

This task gives you the installation and assembly procedures of the component.

B. Procedure

WARNING: **BE CAREFUL WHEN YOU USE SOLVENTS/CLEANING AGENTS, SEALANTS AND OTHER MATERIALS. OBEY THE MATERIAL MANUFACTURER'S INSTRUCTIONS AND THE LOCAL REGULATIONS. MAKE SURE THAT THERE IS A GOOD FLOW OF AIR THROUGH THE WORK AREA. DO NOT BREATHE THE FUMES. DO NOT SMOKE. DO NOT USE THESE MATERIALS NEAR A FLAME, SPARKS OR SOURCES OF HEAT. USE PROTECTIVE CLOTHING, GOGGLES AND GLOVES. IF YOU GET ONE OF THESE MATERIALS ON YOUR SKIN OR IN YOUR EYES, FLUSH IT AWAY WITH A FLOW OF CLEAN WATER. IF YOU GET ONE OF THESE MATERIALS IN YOUR MOUTH, GET IMMEDIATE MEDICAL AID. IN GENERAL, THESE MATERIALS ARE POISONOUS, FLAMMABLE AND SKIN IRRITANTS.**

CAUTION: **DO ALL THE WORK ON A CLEAN, SOFT SURFACE TO PREVENT DAMAGE TO THE COMPONENTS.**

CAUTION: **MAKE SURE THAT ALL THE PARTS ARE CLEAN BEFORE YOU ASSEMBLE THEM.**

SUB TASK 25-41-51-400-134-A01

1. Installation of the Housing (07H-1)

(a) Attach the fittings 07H-040 with the screws 07H-050.

(b) Attach the bracket 07H-210 with the screws 07H-220 to the housing assembly 07H-010.

(c) Attach the Z-angles 07H-180 with the screws 07H-190 and the washers 07H-200 to the housing assembly 07H-010.

(d) Attach the L-angles 07H-230 with the screws 07H-240 and the washers 07H-250 to the side wall decor panel assembly 07H-130.

(e) Attach the L-angle 07H-270 and the angles 07H-260 with the screws 07H-280 and the washers 07H-200 to the side wall decor panel assembly 07H-130.

(f) Attach the side wall decor panel assembly 07H-130 and the angles 07H-260 with the screws 07H-280 and the washers 07H-200 to the housing assembly 07H-010.

(g) Attach the L-angle 07H-270 with the screws 07H-280 and the washers 07H-200 to the housing assembly 07H-010.

(h) Attach the side wall decor panel assembly 07H-130 and the L-angles 07H-230 with the screws 07H-240 and the washers 07H-250 to the housing assembly 07H-010.

(i) Attach the side wall decor panel assembly 07H-130 with the screws 07H-195 and the nuts 07H-185 to the Z-angles 07H-180.

TASK 25-41-51-400-818-K01
D2549010605200 D2549010606600 D2549010606800 D2549010607000 D2549010608400 D2549020502200 D2549020505600 D2549020509000 D2549020509600 D2549020511000 D2549020513000 D2549020701600 D2549020705800 D2549020713000 D2549020714400 D2549030503800 D2549030513200 D2549030600200 D2549030607200 D2549030607800 D2549030609000 D2549030611800 D2549030614200 D2549030614400 R225401168-000 R225401168-020 R225401613-000 R225401625-000

169. Installation of the Housing

A. General

This task gives you the installation and assembly procedures of the component.

B. Procedure

WARNING: BE CAREFUL WHEN YOU USE SOLVENTS/CLEANING AGENTS, SEALANTS AND OTHER MATERIALS. OBEY THE MATERIAL MANUFACTURER'S INSTRUCTIONS AND THE LOCAL REGULATIONS. MAKE SURE THAT THERE IS A GOOD FLOW OF AIR THROUGH THE WORK AREA. DO NOT BREATHE THE FUMES. DO NOT SMOKE. DO NOT USE THESE MATERIALS NEAR A FLAME, SPARKS OR SOURCES OF HEAT. USE PROTECTIVE CLOTHING, GOGGLES AND GLOVES. IF YOU GET ONE OF THESE MATERIALS ON YOUR SKIN OR IN YOUR EYES, FLUSH IT AWAY WITH A FLOW OF CLEAN WATER. IF YOU GET ONE OF THESE MATERIALS IN YOUR MOUTH, GET IMMEDIATE MEDICAL AID. IN GENERAL, THESE MATERIALS ARE POISONOUS, FLAMMABLE AND SKIN IRRITANTS.

CAUTION: DO ALL THE WORK ON A CLEAN, SOFT SURFACE TO PREVENT DAMAGE TO THE COMPONENTS.

CAUTION: MAKE SURE THAT ALL THE PARTS ARE CLEAN BEFORE YOU ASSEMBLE THEM.

SUB TASK 25-41-51-400-135-A01
D2549010605200 D2549010606600 D2549010606800 D2549010607000 D2549010608400 D2549020502200 D2549020505600 D2549020509000 D2549020509600 D2549020511000 D2549020513000 D2549020701600 D2549020705800 D2549020713000 D2549020714400 D2549030513200 D2549030600200 D2549030607200 D2549030607800 D2549030609000 D2549030611800 D2549030614200 D2549030614400 R225401168-000 R225401168-020 R225401613-000 R225401625-000

1. Installation of the Housing (07J-1)

(a) Attach the fittings 07J-060 with the screws 07J-070.

(b) Attach the screws 07J-160 to the housing assembly 07J-010.

(c) Attach the glass mirror 07J-140 to the screws 07J-160.

(d) Attach the stud 07J-150 to the housing assembly 07J-010.

(e) Attach the housing assembly 07J-010 with the screw 07J-210 and the washer 07J-220 to the lavatory structure.

SUB TASK 25-41-51-400-135-B01
D2549030503800

2. Installation of the Housing (07J-1)

(a) Attach the fittings 07J-060 with the screws 07J-070.

(b) Attach the cosmetics holder 07J-230 with the bolts 07J-250.

(c) Attach the screws 07J-160 to the housing assembly 07J-010.

(d) Attach the glass mirror 07J-140 to the screws 07J-160.

(e) Attach the stud 07J-150 to the housing assembly 07J-010.

(f) Attach the housing assembly 07J-010 with the screw 07J-210 and the washer 07J-220 to the lavatory structure.

TASK 25-41-51-400-818-L01

D2549010607200 D2549010608600 D2549010609000 D2549010609400 D2549020801000 D2549020802200 D2549020802600 D2549030608000 D2549030610600 D2549030611000 D2549030611200 D2549030611400 D2549030611600 D2549030612800 D2549030613200 D2549030613400 R225401134-012 R225401134-026 R225401134-028 R225401145-006 R225401172-016 R225401183-002 R225401614-000

170. Installation of the Housing

A. General

This task gives you the installation and assembly procedures of the component.

B. Procedure

WARNING: BE CAREFUL WHEN YOU USE SOLVENTS/CLEANING AGENTS, SEALANTS AND OTHER MATERIALS. OBEY THE MATERIAL MANUFACTURER'S INSTRUCTIONS AND THE LOCAL REGULATIONS. MAKE SURE THAT THERE IS A GOOD FLOW OF AIR THROUGH THE WORK AREA. DO NOT BREATHE THE FUMES. DO NOT SMOKE. DO NOT USE THESE MATERIALS NEAR A FLAME, SPARKS OR SOURCES OF HEAT. USE PROTECTIVE CLOTHING, GOGGLES AND GLOVES. IF YOU GET ONE OF THESE MATERIALS ON YOUR SKIN OR IN YOUR EYES, FLUSH IT AWAY WITH A FLOW OF CLEAN WATER. IF YOU GET ONE OF THESE MATERIALS IN YOUR MOUTH, GET IMMEDIATE MEDICAL AID. IN GENERAL, THESE MATERIALS ARE POISONOUS, FLAMMABLE AND SKIN IRRITANTS.

CAUTION: DO ALL THE WORK ON A CLEAN, SOFT SURFACE TO PREVENT DAMAGE TO THE COMPONENTS.

CAUTION: MAKE SURE THAT ALL THE PARTS ARE CLEAN BEFORE YOU ASSEMBLE THEM.

SUB TASK 25-41-51-400-136-A01

1. Installation of the Housing (07K-1)

(a) Attach the fittings 07K-060 with the screws 07K-070.

(b) Attach the screws 07K-150 to the housing assembly 07K-010.

(c) Attach the glass mirror 07K-130 to the screws 07K-150.

(d) Attach the stud 07K-140 to the housing assembly 07K-010.

(e) Attach the housing assembly 07K-010 with the screws 07K-122, 07K-124, 07K-200 and the washers 07K-126, 07K-128, 07K-210 to the lavatory structure.

TASK 25-41-51-400-818-M01
D2549010607600 D2549010608800 D2549010609200 D2549010609600 D2549010609800 D2549010610200 D2549010610400 D2549020510400 D2549020510800 D2549020511200 D2549020511800 D2549020512400 D2549020513400 D2549020513600 D2549020514800 D2549020800800 D2549020801600 D2549020802000 D2549030400200 D2549030609800 D2549030613800 D2549030614600 R225401137-016 R225401145-008 R225401145-014 R225401168-002 R225401168-022 R225401172-018 R225401600-004 R225401605-002 R225401629-000 R225401629-002

171. Installation of the Housing

A. General

This task gives you the installation and assembly procedures of the component.

B. Procedure

WARNING: BE CAREFUL WHEN YOU USE SOLVENTS/CLEANING AGENTS, SEALANTS AND OTHER MATERIALS. OBEY THE MATERIAL MANUFACTURER'S INSTRUCTIONS AND THE LOCAL REGULATIONS. MAKE SURE THAT THERE IS A GOOD FLOW OF AIR THROUGH THE WORK AREA. DO NOT BREATHE THE FUMES. DO NOT SMOKE. DO NOT USE THESE MATERIALS NEAR A FLAME, SPARKS OR SOURCES OF HEAT. USE PROTECTIVE CLOTHING, GOGGLES AND GLOVES. IF YOU GET ONE OF THESE MATERIALS ON YOUR SKIN OR IN YOUR EYES, FLUSH IT AWAY WITH A FLOW OF CLEAN WATER. IF YOU GET ONE OF THESE MATERIALS IN YOUR MOUTH, GET IMMEDIATE MEDICAL AID. IN GENERAL, THESE MATERIALS ARE POISONOUS, FLAMMABLE AND SKIN IRRITANTS.

CAUTION: DO ALL THE WORK ON A CLEAN, SOFT SURFACE TO PREVENT DAMAGE TO THE COMPONENTS.

CAUTION: MAKE SURE THAT ALL THE PARTS ARE CLEAN BEFORE YOU ASSEMBLE THEM.

SUB TASK 25-41-51-400-137-A01
1. Installation of the Housing (07L-1)

(a) Attach the fittings 07L-060 with the screws 07L-070.

(b) Attach the screws 07L-150 to the housing assembly 07L-010.

(c) Attach the glass mirror 07L-130 to the screws 07L-150.

(d) Attach the stud 07L-140 to the housing assembly 07L-010.

(e) Attach the housing assembly 07L-010 with the screws 07L-122, 07L-124, 07L-200 and the washers 07L-126, 07L-128, 07L-210 to the lavatory structure.

TASK 25-41-51-400-818-N01
D2549020802800

172. Installation of the Housing

A. General

This task gives you the installation and assembly procedures of the component.

B. Procedure

WARNING: **BE CAREFUL WHEN YOU USE SOLVENTS/CLEANING AGENTS, SEALANTS AND OTHER MATERIALS. OBEY THE MATERIAL MANUFACTURER'S INSTRUCTIONS AND THE LOCAL REGULATIONS. MAKE SURE THAT THERE IS A GOOD FLOW OF AIR THROUGH THE WORK AREA. DO NOT BREATHE THE FUMES. DO NOT SMOKE. DO NOT USE THESE MATERIALS NEAR A FLAME, SPARKS OR SOURCES OF HEAT. USE PROTECTIVE CLOTHING, GOGGLES AND GLOVES. IF YOU GET ONE OF THESE MATERIALS ON YOUR SKIN OR IN YOUR EYES, FLUSH IT AWAY WITH A FLOW OF CLEAN WATER. IF YOU GET ONE OF THESE MATERIALS IN YOUR MOUTH, GET IMMEDIATE MEDICAL AID. IN GENERAL, THESE MATERIALS ARE POISONOUS, FLAMMABLE AND SKIN IRRITANTS.**

CAUTION: **DO ALL THE WORK ON A CLEAN, SOFT SURFACE TO PREVENT DAMAGE TO THE COMPONENTS.**

CAUTION: **MAKE SURE THAT ALL THE PARTS ARE CLEAN BEFORE YOU ASSEMBLE THEM.**

SUB TASK 25-41-51-400-138-A01

1. Installation of the Housing (07M-1)

(a) Attach the fittings 07M-050 with the screws 07M-060.

(b) Attach the screws 07M-140 to the housing assembly 07M-010.

(c) Attach the glass mirror 07M-120 to the screws 07M-140.

(d) Attach the stud 07M-130 to the housing assembly 07M-010.

(e) Attach the housing assembly 07M-010 with the screws 07M-112, 07M-114, 07M-190 and the washers 07M-116, 07M-118, 07M-200 to the lavatory structure.

TASK 25-41-51-400-818-P01
D2549020510600 D2549020800400 D2549020800600 D2549020803200 D2549020803400 D2549020803800 D2549030403800 D2549030610000 D2549030610400 D2549030612000 D2549030612200 D2549030612400 D2549030614800 R225401172-000 R225401196-006 R225401196-038 R225401196-052 R225401199-004 R225401199-006 R225401611-010 R225401693-000

173. Installation of the Housing

A. General

This task gives you the installation and assembly procedures of the component.

B. Procedure

WARNING: BE CAREFUL WHEN YOU USE SOLVENTS/CLEANING AGENTS, SEALANTS AND OTHER MATERIALS. OBEY THE MATERIAL MANUFACTURER'S INSTRUCTIONS AND THE LOCAL REGULATIONS. MAKE SURE THAT THERE IS A GOOD FLOW OF AIR THROUGH THE WORK AREA. DO NOT BREATHE THE FUMES. DO NOT SMOKE. DO NOT USE THESE MATERIALS NEAR A FLAME, SPARKS OR SOURCES OF HEAT. USE PROTECTIVE CLOTHING, GOGGLES AND GLOVES. IF YOU GET ONE OF THESE MATERIALS ON YOUR SKIN OR IN YOUR EYES, FLUSH IT AWAY WITH A FLOW OF CLEAN WATER. IF YOU GET ONE OF THESE MATERIALS IN YOUR MOUTH, GET IMMEDIATE MEDICAL AID. IN GENERAL, THESE MATERIALS ARE POISONOUS, FLAMMABLE AND SKIN IRRITANTS.

CAUTION: DO ALL THE WORK ON A CLEAN, SOFT SURFACE TO PREVENT DAMAGE TO THE COMPONENTS.

CAUTION: MAKE SURE THAT ALL THE PARTS ARE CLEAN BEFORE YOU ASSEMBLE THEM.

SUB TASK 25-41-51-400-139-A01
D2549020510600 D2549020800400 D2549020800600 D2549020803200 D2549020803400 D2549020803800 D2549030403800 D2549030610000 D2549030612000 D2549030612200 D2549030612400 D2549030614800 R225401172-000 R225401196-006 R225401196-038 R225401196-052 R225401199-004 R225401199-006 R225401611-010 R225401693-000

1. Installation of the Housing (07N-1)

(a) Attach the fittings 07N-060 with the screws 07N-070.

(b) Attach the screws 07N-190 to the housing assembly 07N-010.

(c) Attach the glass mirror 07N-170 to the screws 07N-190.

(d) Attach the stud 07N-180 to the housing assembly 07N-010.

(e) Attach the housing assembly 07N-010 with the screws 07N-130, 07N-140, 07N-240 and the washers 07N-150, 07N-160, 07N-250 to the lavatory structure.

SUB TASK 25-41-51-400-139-B01
D2549030610400

2. Installation of the Housing (07N-1)

(a) Attach the fittings 07N-060 with the screws 07N-070.

(b) Attach the soap dispenser holder 07N-270 with the screws 07N-280 and the washers 07N-290.

(c) Attach the cosmetics holder 07N-300 and the spacer 07N-310 with the bolts 07N-320.

(d) Attach the screws 07N-190 to the housing assembly 07N-010.

(e) Attach the glass mirror 07N-170 to the screws 07N-190.

(f) Attach the stud 07N-180 to the housing assembly 07N-010.

(g) Attach the housing assembly 07N-010 with the screws 07N-130, 07N-140, 07N-240 and the washers 07N-150, 07N-160, 07N-250 to the lavatory structure.

TASK 25-41-51-400-818-Q01
D2549020800200 D2549020801200 D2549020803600 D2549030400000 D2549030400400

174. Installation of the Housing

A. General

This task gives you the installation and assembly procedures of the component.

B. Procedure

WARNING: BE CAREFUL WHEN YOU USE SOLVENTS/CLEANING AGENTS, SEALANTS AND OTHER MATERIALS. OBEY THE MATERIAL MANUFACTURER'S INSTRUCTIONS AND THE LOCAL REGULATIONS. MAKE SURE THAT THERE IS A GOOD FLOW OF AIR THROUGH THE WORK AREA. DO NOT BREATHE THE FUMES. DO NOT SMOKE. DO NOT USE THESE MATERIALS NEAR A FLAME, SPARKS OR SOURCES OF HEAT. USE PROTECTIVE CLOTHING, GOGGLES AND GLOVES. IF YOU GET ONE OF THESE MATERIALS ON YOUR SKIN OR IN YOUR EYES, FLUSH IT AWAY WITH A FLOW OF CLEAN WATER. IF YOU GET ONE OF THESE MATERIALS IN YOUR MOUTH, GET IMMEDIATE MEDICAL AID. IN GENERAL, THESE MATERIALS ARE POISONOUS, FLAMMABLE AND SKIN IRRITANTS.

CAUTION: DO ALL THE WORK ON A CLEAN, SOFT SURFACE TO PREVENT DAMAGE TO THE COMPONENTS.

CAUTION: MAKE SURE THAT ALL THE PARTS ARE CLEAN BEFORE YOU ASSEMBLE THEM.

SUB TASK 25-41-51-400-140-A01
1. Installation of the Housing (07P-1)

(a) Attach the fittings 07P-060 with the screws 07P-070.

(b) Attach the screws 07P-190 to the housing assembly 07P-010.

(c) Attach the glass mirror 07P-170 to the screws 07P-190.

(d) Attach the stud 07P-180 to the housing assembly 07P-010.

(e) Attach the housing assembly 07P-010 with the screws 07P-130, 07P-140, 07P-240 and the washers 07P-150, 07P-160, 07P-250 to the lavatory structure.

TASK 25-41-51-400-818-R01
D2549010611200 D2549010611600 D2549010612200 D2549020405200 D2549020802400 D2549020805600 D2549020806400 D2549020808400 D2549020809800 D2549020812000 D2549020814600 D2549030402600 D2549030402800 D2549030403400 D2549030403600 D2549030404400 D2549030603200 D2549030613600 R225401134-030 R225401192-002

175. Installation of the Housing

A. General

This task gives you the installation and assembly procedures of the component.

B. Procedure

WARNING: BE CAREFUL WHEN YOU USE SOLVENTS/CLEANING AGENTS, SEALANTS AND OTHER MATERIALS. OBEY THE MATERIAL MANUFACTURER'S INSTRUCTIONS AND THE LOCAL REGULATIONS. MAKE SURE THAT THERE IS A GOOD FLOW OF AIR THROUGH THE WORK AREA. DO NOT BREATHE THE FUMES. DO NOT SMOKE. DO NOT USE THESE MATERIALS NEAR A FLAME, SPARKS OR SOURCES OF HEAT. USE PROTECTIVE CLOTHING, GOGGLES AND GLOVES. IF YOU GET ONE OF THESE MATERIALS ON YOUR SKIN OR IN YOUR EYES, FLUSH IT AWAY WITH A FLOW OF CLEAN WATER. IF YOU GET ONE OF THESE MATERIALS IN YOUR MOUTH, GET IMMEDIATE MEDICAL AID. IN GENERAL, THESE MATERIALS ARE POISONOUS, FLAMMABLE AND SKIN IRRITANTS.

CAUTION: DO ALL THE WORK ON A CLEAN, SOFT SURFACE TO PREVENT DAMAGE TO THE COMPONENTS.

CAUTION: MAKE SURE THAT ALL THE PARTS ARE CLEAN BEFORE YOU ASSEMBLE THEM.

SUB TASK 25-41-51-400-031-A01
1. Installation of the Housing (07Q-1)

(a) Attach the fittings 07Q-060 with the screws 07Q-070.

(b) Attach the decor covers 07Q-260, 07Q-261 with the screws 07Q-270 to the housing assembly 07Q-010.

(c) Attach the screws 07Q-190 to the housing assembly 07Q-010.

(d) Attach the glass mirror 07Q-170 to the screws 07Q-190.

(e) Attach the stud 07Q-180 to the housing assembly 07Q-010.

(f) Attach the housing assembly 07Q-010 with the screws 07Q-130, 07Q-140, 07Q-240 and the washers 07Q-150, 07Q-160, 07Q-250 to the lavatory structure.

TASK 25-41-51-400-818-S01

D2549010611000 D2549010612000 D2549020714000 D2549020801400 D2549020806200 D2549020807000 D2549020807400 D2549020808600 D2549020808800 D2549020809000 D2549020809400 D2549020810200 D2549030401400 D2549030402000 D2549030402200 D2549030402400 D2549030403000 D2549030405200 D2549030405400 D2549030405600 D2549030606000 D2549030608400 D2549030612600 R225401134-032 R225401134-034 R225401168-008 R225401168-010 R225401168-012 R225401168-024 R225401168-026 R225401196-008 R225401196-044 R225401196-054 R225401199-002 R225401199-008 R225401609-000 R225401611-008 R225401622-000

176. Installation of the Housing

A. General

This task gives you the installation and assembly procedures of the component.

B. Procedure

WARNING: BE CAREFUL WHEN YOU USE SOLVENTS/CLEANING AGENTS, SEALANTS AND OTHER MATERIALS. OBEY THE MATERIAL MANUFACTURER'S INSTRUCTIONS AND THE LOCAL REGULATIONS. MAKE SURE THAT THERE IS A GOOD FLOW OF AIR THROUGH THE WORK AREA. DO NOT BREATHE THE FUMES. DO NOT SMOKE. DO NOT USE THESE MATERIALS NEAR A FLAME, SPARKS OR SOURCES OF HEAT. USE PROTECTIVE CLOTHING, GOGGLES AND GLOVES. IF YOU GET ONE OF THESE MATERIALS ON YOUR SKIN OR IN YOUR EYES, FLUSH IT AWAY WITH A FLOW OF CLEAN WATER. IF YOU GET ONE OF THESE MATERIALS IN YOUR MOUTH, GET IMMEDIATE MEDICAL AID. IN GENERAL, THESE MATERIALS ARE POISONOUS, FLAMMABLE AND SKIN IRRITANTS.

CAUTION: DO ALL THE WORK ON A CLEAN, SOFT SURFACE TO PREVENT DAMAGE TO THE COMPONENTS.

CAUTION: MAKE SURE THAT ALL THE PARTS ARE CLEAN BEFORE YOU ASSEMBLE THEM.

SUB TASK 25-41-51-400-032-A01

1. Installation of the Housing (07R-1)

(a) Attach the fittings 07R-060 with the screws 07R-070.

(b) Attach the decor covers 07R-260 with the screws 07R-270 to the housing assembly 07R-010.

(c) Attach the screws 07R-190 to the housing assembly 07R-010.

(d) Attach the glass mirror 07R-170 to the screws 07R-190.

(e) Attach the stud 07R-180 to the housing assembly 07R-010.

(f) Attach the housing assembly 07R-010 with the screws 07R-130, 07R-140, 07R-240 and the washers 07R-150, 07R-160, 07R-250 to the lavatory structure.

TASK 25-41-51-400-818-T01

D2547161903000 D2549010610800 D2549010611800 D2549010612400 D2549010613200 D2549010613400 D2549020804000 D2549020804200 D2549020804800 D2549020805000 D2549020806000 D2549020806800 D2549020807600 D2549020808200 D2549020810000 D2549020810600 D2549020811400 D2549020811600 D2549020811800 D2549030400600 D2549030401000 D2549030401600 D2549030404200 D2549030404800 R225401145-010 R225401196-010 R225401196-012 R225401196-040 R225401196-056 R225401196-058 R225401199-000 R225401622-002 R225401646-000 R225401647-000 R225401648-000

177. Installation of the Housing

A. General

This task gives you the installation and assembly procedures of the component.

B. Procedure

WARNING: BE CAREFUL WHEN YOU USE SOLVENTS/CLEANING AGENTS, SEALANTS AND OTHER MATERIALS. OBEY THE MATERIAL MANUFACTURER'S INSTRUCTIONS AND THE LOCAL REGULATIONS. MAKE SURE THAT THERE IS A GOOD FLOW OF AIR THROUGH THE WORK AREA. DO NOT BREATHE THE FUMES. DO NOT SMOKE. DO NOT USE THESE MATERIALS NEAR A FLAME, SPARKS OR SOURCES OF HEAT. USE PROTECTIVE CLOTHING, GOGGLES AND GLOVES. IF YOU GET ONE OF THESE MATERIALS ON YOUR SKIN OR IN YOUR EYES, FLUSH IT AWAY WITH A FLOW OF CLEAN WATER. IF YOU GET ONE OF THESE MATERIALS IN YOUR MOUTH, GET IMMEDIATE MEDICAL AID. IN GENERAL, THESE MATERIALS ARE POISONOUS, FLAMMABLE AND SKIN IRRITANTS.

CAUTION: DO ALL THE WORK ON A CLEAN, SOFT SURFACE TO PREVENT DAMAGE TO THE COMPONENTS.

CAUTION: MAKE SURE THAT ALL THE PARTS ARE CLEAN BEFORE YOU ASSEMBLE THEM.

SUB TASK 25-41-51-400-033-A01

1. Installation of the Housing (07S-1)

(a) Attach the fittings 07S-050 with the screws 07S-060.

(b) Attach the decor covers 07S-250 with the screws 07S-260 to the housing assembly 07S-010.

(c) Attach the screws 07S-180 to the housing assembly 07S-010.

(d) Attach the mirror assembly 07S-160 to the screws 07S-180.

(e) Attach the stud 07S-170 to the housing assembly 07S-010.

(f) Attach the housing assembly 07S-010 with the screws 07S-120, 07S-130, 07S-230 and the washers 07S-140, 07S-150, 07S-240 to the lavatory structure.

TASK 25-41-51-400-818-U01

D2549010400400 D2549010403000 D2549010611400 D2549010613000 D2549010614200 D2549010614400 D2549010614800 D2549020400400 D2549020404200 D2549020404600 D2549020404800 D2549020405000 D2549020405400 D2549020405600 D2549020406200 D2549020805400 D2549020805800 D2549020806600 D2549020807800 D2549020810400 D2549020811200 D2549020812200 D2549020812800 D2549020813600 D2549020813800 D2549020814000 D2549020814200 D2549020814400 D2549030401200 D2549030401800 D2549030404000 D2549030405800 D2549030406000 D2549030406400 D2549030406800 D2549030407000 D2549030407400 D2549030407600 D2549030407800 R225401152-008 R225401196-014 R225401196-016 R225401196-060 R225401196-062 R225401199-010 R225401611-006 R225401611-012 R225401639-000 R225401639-002 R225401643-000 R225401643-002 R225401643-004 R225401648-002 R225401656-000 R225401656-002

178. Installation of the Housing

A. General

This task gives you the installation and assembly procedures of the component.

B. Procedure

WARNING: BE CAREFUL WHEN YOU USE SOLVENTS/CLEANING AGENTS, SEALANTS AND OTHER MATERIALS. OBEY THE MATERIAL MANUFACTURER'S INSTRUCTIONS AND THE LOCAL REGULATIONS. MAKE SURE THAT THERE IS A GOOD FLOW OF AIR THROUGH THE WORK AREA. DO NOT BREATHE THE FUMES. DO NOT SMOKE. DO NOT USE THESE MATERIALS NEAR A FLAME, SPARKS OR SOURCES OF HEAT. USE PROTECTIVE CLOTHING, GOGGLES AND GLOVES. IF YOU GET ONE OF THESE MATERIALS ON YOUR SKIN OR IN YOUR EYES, FLUSH IT AWAY WITH A FLOW OF CLEAN WATER. IF YOU GET ONE OF THESE MATERIALS IN YOUR MOUTH, GET IMMEDIATE MEDICAL AID. IN GENERAL, THESE MATERIALS ARE POISONOUS, FLAMMABLE AND SKIN IRRITANTS.

CAUTION: DO ALL THE WORK ON A CLEAN, SOFT SURFACE TO PREVENT DAMAGE TO THE COMPONENTS.

CAUTION: MAKE SURE THAT ALL THE PARTS ARE CLEAN BEFORE YOU ASSEMBLE THEM.

SUB TASK 25-41-51-400-034-A01

D2549010400400 D2549010403000 D2549010611400 D2549010613000 D2549010614200 D2549010614400 D2549010614800 D2549020400400 D2549020404200 D2549020404600 D2549020404800 D2549020405000 D2549020405400 D2549020405600 D2549020406200 D2549020805400 D2549020805800 D2549020806600 D2549020807800 D2549020810400 D2549020811200 D2549020812200 D2549020813600 D2549020813800

D2549020814000 D2549020814200 D2549020814400 D2549030401200 D2549030401800 D2549030404000 D2549030405800 D2549030406000 D2549030406400 D2549030406800 D2549030407000 D2549030407400 D2549030407600 D2549030407800 R225401152-008 R225401196-014 R225401196-016 R225401196-060 R225401196-062 R225401199-010 R225401611-006 R225401611-012 R225401639-000 R225401639-002 R225401643-000 R225401643-002 R225401643-004 R225401648-002 R225401656-000 R225401656-002

1. Installation of the Housing (07T-1)

   (a) Attach the fittings 07T-050 with the screws 07T-060.

   (b) Attach the decor covers 07T-250 with the screws 07T-260 to the housing assembly 07T-010.

   (c) Attach the screws 07T-180 to the housing assembly 07T-010.

   (d) Attach the mirror assembly 07T-160 to the screws 07T-180.

   (e) Attach the stud 07T-170 to the housing assembly 07T-010.

   (f) Attach the housing assembly 07T-010 with the screws 07T-120, 07T-130, 07T-230 and the washers 07T-140, 07T-150, 07T-240 to the lavatory structure.

SUB TASK 25-41-51-400-034-B01
D2549020812800

2. Installation of the Housing (07T-1)

   (a) Attach the fittings 07T-050 with the screws 07T-060.

   (b) Attach the decor covers 07T-270, 07T-280 with the screws 07T-260 to the housing assembly 07T-010.

   (c) Attach the screws 07T-180 to the housing assembly 07T-010.

   (d) Attach the mirror assembly 07T-160 to the screws 07T-180.

   (e) Attach the stud 07T-170 to the housing assembly 07T-010.

   (f) Attach the housing assembly 07T-010 with the screws 07T-120, 07T-130, 07T-230 and the washers 07T-140, 07T-150, 07T-240 to the lavatory structure.

TASK 25-41-51-400-818-V01
D2549010400200 D2549010400600 D2549010402000 D2549010402800 D2549010612600 D2549010613600 D2549010613800 D2549020404400 D2549020405800 D2549020410600 D2549020801800 D2549020810800 D2549020812400 D2549020813000 D2549020814800 D2549030404600 D2549030405000 D2549030407200 D2549030408000 D2549030410400 D2549030614000 D2549040500200 R225401134-036 R225401662-000 R225401662-002

179. Installation of the Housing

A. General

This task gives you the installation and assembly procedures of the component.

B. Procedure

WARNING: BE CAREFUL WHEN YOU USE SOLVENTS/CLEANING AGENTS, SEALANTS AND OTHER MATERIALS. OBEY THE MATERIAL MANUFACTURER'S INSTRUCTIONS AND THE LOCAL REGULATIONS. MAKE SURE THAT THERE IS A GOOD FLOW OF AIR THROUGH THE WORK AREA. DO NOT BREATHE THE FUMES. DO NOT SMOKE. DO NOT USE THESE MATERIALS NEAR A FLAME, SPARKS OR SOURCES OF HEAT. USE PROTECTIVE CLOTHING, GOGGLES AND GLOVES. IF YOU GET ONE OF THESE MATERIALS ON YOUR SKIN OR IN YOUR EYES, FLUSH IT AWAY WITH A FLOW OF CLEAN WATER. IF YOU GET ONE OF THESE MATERIALS IN YOUR MOUTH, GET IMMEDIATE MEDICAL AID. IN GENERAL, THESE MATERIALS ARE POISONOUS, FLAMMABLE AND SKIN IRRITANTS.

CAUTION: DO ALL THE WORK ON A CLEAN, SOFT SURFACE TO PREVENT DAMAGE TO THE COMPONENTS.

CAUTION: MAKE SURE THAT ALL THE PARTS ARE CLEAN BEFORE YOU ASSEMBLE THEM.

SUB TASK 25-41-51-400-035-A01
D2549010400200 D2549010400600 D2549010402000 D2549010402800 D2549010612600 D2549010613600 D2549010613800 D2549020404400 D2549020405800 D2549020410600 D2549020801800 D2549020810800 D2549020812400 D2549020813000 D2549020814800 D2549030404600 D2549030405000 D2549030407200 D2549030408000 D2549030410400 D2549040500200 R225401134-036 R225401662-000 R225401662-002

1. Installation of the Housing (07U-1)

(a) Attach the plug 07U-290.

(b) Attach the fittings 07U-050 with the screws 07U-060.

(c) Attach the decor covers 07U-250 with the screws 07U-260 to the housing assembly 07U-010.

(d) Attach the screws 07U-180 to the housing assembly 07U-010.

(e) Attach the glass mirror 07U-160 to the screws 07U-180.

(f) Attach the stud 07U-170 to the housing assembly 07U-010.

(g) Attach the housing assembly 07U-010 with the screws 07U-120, 07U-130, 07U-230 and the washers 07U-140, 07U-150, 07U-240 to the lavatory structure.

SUB TASK 25-41-51-400-035-B01
D2549030614000

2. Installation of the Housing (07U-1)

(a) Attach the fittings 07U-050 with the screws 07U-060.

(b) Attach the cosmetics holder 07U-270 with the bolts 07U-280.

(c) Attach the decor covers 07U-250 with the screws 07U-260 to the housing assembly 07U-010.

(d) Attach the screws 07U-180 to the housing assembly 07U-010.

(e) Attach the glass mirror 07U-160 to the screws 07U-180.

(f) Attach the stud 07U-170 to the housing assembly 07U-010.

(g) Attach the housing assembly 07U-010 with the screws 07U-120, 07U-130, 07U-230 and the washers 07U-140, 07U-150, 07U-240 to the lavatory structure.

TASK 25-41-51-400-818-W01
D2549010400000 D2549010400800 D2549010402600 D2549010614600 D2549020400000 D2549020400200 D2549020403800 D2549020513800 D2549020805200 D2549020812600 D2549020813200 D2549020813400 D2549030406600 D2549030408200 D2549030408400 D2549030409800 R225401136-004 R225401136-018 R225401658-000

180. Installation of the Housing

A. General

This task gives you the installation and assembly procedures of the component.

B. Procedure

WARNING: **BE CAREFUL WHEN YOU USE SOLVENTS/CLEANING AGENTS, SEALANTS AND OTHER MATERIALS. OBEY THE MATERIAL MANUFACTURER'S INSTRUCTIONS AND THE LOCAL REGULATIONS. MAKE SURE THAT THERE IS A GOOD FLOW OF AIR THROUGH THE WORK AREA. DO NOT BREATHE THE FUMES. DO NOT SMOKE. DO NOT USE THESE MATERIALS NEAR A FLAME, SPARKS OR SOURCES OF HEAT. USE PROTECTIVE CLOTHING, GOGGLES AND GLOVES. IF YOU GET ONE OF THESE MATERIALS ON YOUR SKIN OR IN YOUR EYES, FLUSH IT AWAY WITH A FLOW OF CLEAN WATER. IF YOU GET ONE OF THESE MATERIALS IN YOUR MOUTH, GET IMMEDIATE MEDICAL AID. IN GENERAL, THESE MATERIALS ARE POISONOUS, FLAMMABLE AND SKIN IRRITANTS.**

CAUTION: **DO ALL THE WORK ON A CLEAN, SOFT SURFACE TO PREVENT DAMAGE TO THE COMPONENTS.**

CAUTION: **MAKE SURE THAT ALL THE PARTS ARE CLEAN BEFORE YOU ASSEMBLE THEM.**

SUB TASK 25-41-51-400-036-A01
D2549010400800 D2549010614600 D2549020400000 D2549020400200 D2549020403800 D2549020513800 D2549020805200 D2549020812600 D2549020813200 D2549020813400 D2549030406600 D2549030408200 D2549030408400 D2549030409800 R225401136-004 R225401136-018 R225401658-000

1. Installation of the Housing (07V-1)

(a) Attach the fittings 07V-050 with the screws 07V-060.

(b) Attach the decor covers 07V-260 with the screws 07V-270 to the housing assembly 07V-010.

(c) Attach the screws 07V-190 to the housing assembly 07V-010.

(d) Attach the glass mirror 07V-170 to the screws 07V-190.

(e) Attach the stud 07V-180 to the housing assembly 07V-010.

(f) Attach the housing assembly 07V-010 with the screws 07V-130, 07V-140, 07V-240 and the washers 07V-150, 07V-160, 07V-250 to the lavatory structure.

SUB TASK 25-41-51-400-036-B01
D2549010400000 D2549010402600

2. Installation of the Housing (07V-1)

(a) Attach the label 07V-300 and the protective film 07V-310.

(b) Attach the fittings 07V-050 with the screws 07V-060.

(c) Attach the decor covers 07V-280, 07V-290 with the screws 07V-270 to the housing assembly 07V-010.

(d) Attach the screws 07V-190 to the housing assembly 07V-010.

(e) Attach the glass mirror 07V-170 to the screws 07V-190.

(f) Attach the stud 07V-180 to the housing assembly 07V-010.

(g) Attach the housing assembly 07V-010 with the screws 07V-130, 07V-140, 07V-240 and the washers 07V-150, 07V-160, 07V-250 to the lavatory structure.

TASK 25-41-51-400-818-X01

D2547160900200 D2547160900400 D2549010403600 D2549010404200 D2549010406800
D2549020300000 D2549020300600 D2549020300800 D2549020301800 D2549020400600
D2549020400800 D2549020401200 D2549020402600 D2549020403400 D2549020404000
D2549020407000 D2549020407800 D2549020408600 D2549020409000 D2549020409600
D2549020409800 D2549020412600 D2549020414800 D2549020807200 D2549020809600
D2549030408600 D2549030409200 D2549030409600 D2549030410000 D2549030410200
D2549030411400 D2549030412400 D2549030412600 D2549030413200 D2549030413600
D2549030414000 D2549030700200 D2549030700400 D2549030704800 D2549040500600
R225401136-006 R225401136-012 R225401136-024 R225401152-010 R225401196-018
R225401196-020 R225401196-022 R225401196-042 R225401196-064 R225401196-066
R225401196-068 R225401199-012 R225401611-000 R225401611-014 R225401611-016
R225401611-018 R225401648-004 R225401648-006 R225401648-008 R225401671-000
R225401671-002 R225401673-000 R225401675-000 R225401688-000

181. Installation of the Housing

A. General

This task gives you the installation and assembly procedures of the component.

B. Procedure

WARNING: BE CAREFUL WHEN YOU USE SOLVENTS/CLEANING AGENTS, SEALANTS AND OTHER MATERIALS. OBEY THE MATERIAL MANUFACTURER'S INSTRUCTIONS AND THE LOCAL REGULATIONS. MAKE SURE THAT THERE IS A GOOD FLOW OF AIR THROUGH THE WORK AREA. DO NOT BREATHE THE FUMES. DO NOT SMOKE. DO NOT USE THESE MATERIALS NEAR A FLAME, SPARKS OR SOURCES OF HEAT. USE PROTECTIVE CLOTHING, GOGGLES AND GLOVES. IF YOU GET ONE OF THESE MATERIALS ON YOUR SKIN OR IN YOUR EYES, FLUSH IT AWAY WITH A FLOW OF CLEAN WATER. IF YOU GET ONE OF THESE MATERIALS IN YOUR MOUTH, GET IMMEDIATE MEDICAL AID. IN GENERAL, THESE MATERIALS ARE POISONOUS, FLAMMABLE AND SKIN IRRITANTS.

CAUTION: DO ALL THE WORK ON A CLEAN, SOFT SURFACE TO PREVENT DAMAGE TO THE COMPONENTS.

CAUTION: MAKE SURE THAT ALL THE PARTS ARE CLEAN BEFORE YOU ASSEMBLE THEM.

SUB TASK 25-41-51-400-037-A01

D2547160900200 D2549010403600 D2549010404200 D2549010406800
D2549020300000 D2549020300600 D2549020301800 D2549020400600
D2549020400800 D2549020401200 D2549020402600 D2549020403400
D2549020404000 D2549020407000 D2549020407800 D2549020408600

D2549020409000 D2549020409800 D2549020412600 D2549020414800 D2549020809600 D2549030408600 D2549030409200 D2549030409600 D2549030410000 D2549030410200 D2549030411400 D2549030412400 D2549030412600 D2549030413200 D2549030413600 D2549030414000 D2549030700200 D2549030700400 D2549030704800 D2549040500600 R225401136-006 R225401136-012 R225401136-024 R225401152-010 R225401196-018 R225401196-020 R225401196-022 R225401196-042 R225401196-064 R225401196-066 R225401196-068 R225401199-012 R225401611-000 R225401611-014 R225401611-016 R225401611-018 R225401648-004 R225401648-006 R225401648-008 R225401671-000 R225401671-002 R225401673-000 R225401675-000 R225401688-000

1. Installation of the Housing (07W-1)

   (a) Attach the fittings 07W-050 with the screws 07W-060.

   (b) Attach the decor covers 07W-260 with the screws 07W-270 to the housing assembly 07W-010.

   (c) Attach the screws 07W-190 to the housing assembly 07W-010.

   (d) Attach the mirror assembly 07W-170 to the screws 07W-190.

   (e) Attach the stud 07W-180 to the housing assembly 07W-010.

   (f) Attach the housing assembly 07W-010 with the screws 07W-140 and the washers 07W-160 to the lavatory structure.

   (g) Attach the upper fitting assembly 07W-125 as follows:

      1 Attach the upper fitting 07W-127 with the screws 07W-130, 07W-240 and the washers 07W-150, 07W-250 to the housing assembly 07W-010.

SUB TASK 25-41-51-400-037-B01
D2547160900400 D2549020300800 D2549020409600

2. Installation of the Housing (07W-1)

   (a) Attach the fittings 07W-050 with the screws 07W-060.

   (b) Attach the decor covers 07W-340, 07W-350 with the screws 07W-270 to the housing assembly 07W-010.

   (c) Attach the screws 07W-190 to the housing assembly 07W-010.

   (d) Attach the mirror assembly 07W-170 to the screws 07W-190.

(e) Attach the stud 07W-180 to the housing assembly 07W-010.

(f) Attach the housing assembly 07W-010 with the screws 07W-140 and the washers 07W-160 to the lavatory structure.

(g) Attach the upper fitting assembly 07W-125 as follows:

1 Attach the upper fitting 07W-127 with the screws 07W-130, 07W-240 and the washers 07W-150, 07W-250 to the housing assembly 07W-010.

SUB TASK 25-41-51-400-037-C01
D2549020807200

3. Installation of the Housing (07W-1)

(a) Attach the fittings 07W-050 with the screws 07W-060.

(b) Attach the soap dispenser holder 07W-280 with the screws 07W-290 and the washers 07W-300.

(c) Attach the cosmetics holder 07W-310 and the spacer 07W-320 with the screws 07W-330.

(d) Attach the decor covers 07W-260 with the screws 07W-270 to the housing assembly 07W-010.

(e) Attach the screws 07W-190 to the housing assembly 07W-010.

(f) Attach the mirror assembly 07W-170 to the screws 07W-190.

(g) Attach the stud 07W-180 to the housing assembly 07W-010.

(h) Attach the housing assembly 07W-010 with the screws 07W-140 and the washers 07W-160 to the lavatory structure.

(i) Attach the upper fitting assembly 07W-125 as follows:

1 Attach the upper fitting 07W-127 with the screws 07W-130, 07W-240 and the washers 07W-150, 07W-250 to the housing assembly 07W-010.

TASK 25-41-51-400-818-Y01

D2549010401000 D2549010401400 D2549010401800 D2549010402200 D2549010403400
D2549010404000 D2549010404400 D2549010405400 D2549010406000 D2549010406200
D2549020401000 D2549020402200 D2549020403000 D2549020403200 D2549020403600
D2549020406000 D2549020406400 D2549020406600 D2549020407200 D2549020407400
D2549020410800 D2549030409000 D2549030409400 D2549030411200 D2549030412000
D2549030412800 D2549030413000 D2549030414400 D2549030700000 D2549030701200
D2549030701400 D2549030703800 D2549030705200 D2549040500400 D2549040500800
D2549040501000 D2549040501200 D2549040501600 D2549040501800 D2549040502000
R225401134-014 R225401134-038 R225401611-020 R225401643-006 R225401643-008
R225401649-000 R225401673-002 R225401673-004 R225401676-000 R225401689-004
R225401689-006 R225401691-000 R225401697-000 R225401697-002 R225401803-000
R225401803-002

182. Installation of the Housing

A. General

This task gives you the installation and assembly procedures of the component.

B. Procedure

WARNING: BE CAREFUL WHEN YOU USE SOLVENTS/CLEANING AGENTS, SEALANTS AND OTHER MATERIALS. OBEY THE MATERIAL MANUFACTURER'S INSTRUCTIONS AND THE LOCAL REGULATIONS. MAKE SURE THAT THERE IS A GOOD FLOW OF AIR THROUGH THE WORK AREA. DO NOT BREATHE THE FUMES. DO NOT SMOKE. DO NOT USE THESE MATERIALS NEAR A FLAME, SPARKS OR SOURCES OF HEAT. USE PROTECTIVE CLOTHING, GOGGLES AND GLOVES. IF YOU GET ONE OF THESE MATERIALS ON YOUR SKIN OR IN YOUR EYES, FLUSH IT AWAY WITH A FLOW OF CLEAN WATER. IF YOU GET ONE OF THESE MATERIALS IN YOUR MOUTH, GET IMMEDIATE MEDICAL AID. IN GENERAL, THESE MATERIALS ARE POISONOUS, FLAMMABLE AND SKIN IRRITANTS.

CAUTION: DO ALL THE WORK ON A CLEAN, SOFT SURFACE TO PREVENT DAMAGE TO THE COMPONENTS.

CAUTION: MAKE SURE THAT ALL THE PARTS ARE CLEAN BEFORE YOU ASSEMBLE THEM.

SUB TASK 25-41-51-400-038-A01

D2549010401000 D2549010401800 D2549010402200 D2549010403400
D2549010404000 D2549010405400 D2549010406000 D2549020401000
D2549020402200 D2549020403000 D2549020403200 D2549020403600
D2549020406000 D2549020406400 D2549020406600 D2549020407200
D2549020407400 D2549020410800 D2549030409000 D2549030409400

D2549030411200 D2549030412000 D2549030412800 D2549030413000 D2549030700000 D2549030701200 D2549030701400 D2549030703800 D2549030705200 D2549040500400 D2549040500800 D2549040501000 D2549040501200 D2549040501600 D2549040501800 D2549040502000 R225401134-014 R225401134-038 R225401611-020 R225401643-006 R225401643-008 R225401649-000 R225401673-002 R225401673-004 R225401676-000 R225401689-004 R225401689-006 R225401691-000 R225401697-000 R225401697-002 R225401803-000 R225401803-002

1. Installation of the Housing (07X-1)

   (a) Attach the fittings 07X-050 with the screws 07X-060.

   (b) Attach the decor covers 07X-260 with the screws 07X-270 to the housing assembly 07X-010.

   (c) Attach the screws 07X-190 to the housing assembly 07X-010.

   (d) Attach the glass mirror 07X-170 to the screws 07X-190.

   (e) Attach the stud 07X-180 to the housing assembly 07X-010.

   (f) Attach the housing assembly 07X-010 with the screws 07X-130, 07X-140, 07X-240 and the washers 07X-150, 07X-160, 07X-250 to the lavatory structure.

SUB TASK 25-41-51-400-038-B01
D2549010401400 D2549010404400 D2549010406200 D2549030414400

2. Installation of the Housing (07X-1)

   (a) Attach the decor covers 07X-280, 07X-290 with the screws 07X-270 to the housing 07X-001.

   (b) Attach the screws 07X-190 to the housing 07X-001.

   (c) Attach the glass mirror 07X-170 to the screws 07X-190.

   (d) Attach the stud 07X-180 to the housing 07X-001.

   (e) Attach the housing 07X-001 with the screw 07X-240 and the washer 07X-250 to the lavatory structure.

TASK 25-41-51-400-818-Z01

D2549010401600 D2549010402400 D2549010403200 D2549010403800 D2549010404600
D2549010404800 D2549010405000 D2549010405200 D2549010405600 D2549010405800
D2549010406400 D2549010407000 D2549010504400 D2549010504800 D2549010505400
D2549010507400 D2549010508200 D2549010508600 D2549010509600 D2549010510600
D2549010511800 D2549010513000 D2549010514200 D2549010514600 D2549010603000
D2549010603400 D2549010604400 D2549010610000 D2549010610600 D2549020300400
D2549020301000 D2549020301600 D2549020302000 D2549020302800 D2549020401400
D2549020401600 D2549020402400 D2549020406800 D2549020407600 D2549020408000
D2549020408200 D2549020408800 D2549020409200 D2549020409400 D2549020410200
D2549020410400 D2549020411000 D2549020411200 D2549020411400 D2549020411600
D2549020411800 D2549020412000 D2549020412200 D2549020412400 D2549020412800
D2549020413000 D2549020413200 D2549020413400 D2549020413600 D2549020413800
D2549020414000 D2549020414200 D2549020414600 D2549020503600 D2549020504600
D2549020510000 D2549020511600 D2549020513200 D2549020514400 D2549020601000
D2549020601400 D2549020601600 D2549020602400 D2549020603000 D2549020603200
D2549020604800 D2549020605200 D2549020606000 D2549020606400 D2549020606800
D2549020607000 D2549020607800 D2549020608800 D2549020609600 D2549020611800
D2549020613200 D2549020614800 D2549020700400 D2549020700600 D2549020701200
D2549020705600 D2549020706000 D2549020706400 D2549020707800 D2549020708800
D2549020709200 D2549020711600 D2549020713400 D2549020800000 D2549020803000
D2549020804400 D2549030410600 D2549030410800 D2549030411600 D2549030411800
D2549030412200 D2549030413400 D2549030414200 D2549030414600 D2549030414800
D2549030500400 D2549030501000 D2549030501200 D2549030503400 D2549030503600
D2549030504200 D2549030507000 D2549030508200 D2549030512400 D2549030601000
D2549030602600 D2549030605000 D2549030700600 D2549030700800 D2549030701000
D2549030701600 D2549030701800 D2549030702000 D2549030702200 D2549030702400
D2549030702600 D2549030702800 D2549030703000 D2549030703200 D2549030703400
D2549030703600 D2549030704000 D2549030704200 D2549030704400 D2549030704600
D2549030705600 D2549040501400 R225401133-000 R225401136-008 R225401136-014
R225401139-000 R225401145-000 R225401145-002 R225401145-012 R225401159-000
R225401172-002 R225401172-004 R225401172-010 R225401183-004 R225401183-006
R225401188-000 R225401188-002 R225401192-000 R225401196-024 R225401196-070
R225401602-000 R225401619-000 R225401624-000 R225401627-000 R225401627-002
R225401627-004 R225401646-002 R225401673-006 R225401683-000 R225401685-000
R225401685-002 R225401691-002 R225401808-000 R225401811-000 R225401814-000

183. Installation of the Housing

A. General

This task gives you the installation and assembly procedures of the component.

B. Job Set-up Information

(1) Not applicable

C. Procedure

WARNING: **BE CAREFUL WHEN YOU USE SOLVENTS/CLEANING AGENTS, SEALANTS AND OTHER MATERIALS. OBEY THE MATERIAL MANUFACTURER'S INSTRUCTIONS AND THE LOCAL REGULATIONS. MAKE SURE THAT THERE IS A GOOD FLOW OF AIR THROUGH THE WORK AREA. DO NOT BREATHE THE FUMES. DO NOT SMOKE. DO NOT USE THESE MATERIALS NEAR A FLAME, SPARKS OR SOURCES OF HEAT. USE PROTECTIVE CLOTHING, GOGGLES AND GLOVES. IF YOU GET ONE OF THESE MATERIALS ON YOUR SKIN OR IN YOUR EYES, FLUSH IT AWAY WITH A FLOW OF CLEAN WATER. IF YOU GET ONE OF THESE MATERIALS IN YOUR MOUTH, GET IMMEDIATE MEDICAL AID. IN GENERAL, THESE MATERIALS ARE POISONOUS, FLAMMABLE AND SKIN IRRITANTS.**

CAUTION: **DO ALL THE WORK ON A CLEAN, SOFT SURFACE TO PREVENT DAMAGE TO THE COMPONENTS.**

CAUTION: **MAKE SURE THAT ALL THE PARTS ARE CLEAN BEFORE YOU ASSEMBLE THEM.**

SUB TASK 25-41-51-410-083-A01

D2549010504400 D2549010505400 D2549010507400 D2549010508200 D2549010508600 D2549010509600 D2549010510600 D2549010511800 D2549010513000 D2549010514600 D2549010603000 D2549010603400 D2549010604400 D2549010610000 D2549020510000 D2549020511600 D2549020514400 D2549020602400 D2549020603000 D2549020603200 D2549020604800 D2549020605200 D2549020606400 D2549020606800 D2549020607000 D2549020607800 D2549020609600 D2549020611800 D2549020613200 D2549020614800 D2549020700400 D2549020700600 D2549020701200 D2549020705600 D2549020706000 D2549020709200 D2549020711600 D2549020713400 D2549020800000 D2549020803000 D2549030500400 D2549030501000 D2549030501200 D2549030503400 D2549030503600 D2549030504200 D2549030507000 D2549030508200 D2549030512400 D2549030601000 D2549030602600 D2549030605000 R225401139-000 R225401145-000 R225401145-002 R225401145-012 R225401159-000 R225401172-002 R225401172-004 R225401172-010 R225401188-000 R225401188-002 R225401192-000 R225401619-000

1. Installation of the Housing (07Y-1)

(a) Attach the fittings 07Y-050 with the screws 07Y-060.

(b) Attach the decor covers 07Y-170 with the screws 07Y-180, 07Y-190 to the housing assembly 07Y-010.

(c) Attach the screws 07Y-230 to the housing assembly 07Y-010.

(d) Attach the glass mirror 07Y-210 to the screws 07Y-230.

(e) Attach the stud 07Y-220 to the housing assembly 07Y-010.

(f) Attach the housing assembly 07Y-010 with the screws 07Y-130, 07Y-140, 07Y-270 and the washers 07Y-150, 07Y-160, 07Y-280 to the lavatory structure.

SUB TASK 25-41-51-410-083-B01
D2549010504800

2. Installation of the Housing (07Y-1)

(a) Attach the fittings 07Y-050 with the screws 07Y-060.

(b) Attach the decor covers 07Y-390, 07Y-400 with the screws 07Y-180, 07Y-190 to the housing assembly 07Y-010.

(c) Attach the screws 07Y-230 to the housing assembly 07Y-010.

(d) Attach the glass mirror 07Y-210 to the screws 07Y-230.

(e) Attach the stud 07Y-220 to the housing assembly 07Y-010.

(f) Attach the housing assembly 07Y-010 with the screws 07Y-130, 07Y-140, 07Y-270 and the washers 07Y-150, 07Y-160, 07Y-280 to the lavatory structure.

SUB TASK 25-41-51-410-083-C01
D2549010514200

3. Installation of the Housing (07Y-1)

(a) Attach the fittings 07Y-050 with the screws 07Y-060.

(b) Attach the decor covers 07Y-170, 07Y-390, 07Y-400 with the screws 07Y-180, 07Y-190 to the housing assembly 07Y-010.

(c) Attach the screws 07Y-230 to the housing assembly 07Y-010.

(d) Attach the glass mirror 07Y-210 to the screws 07Y-230.

(e) Attach the stud 07Y-220 to the housing assembly 07Y-010.

(f) Attach the housing assembly 07Y-010 with the screws 07Y-130, 07Y-140, 07Y-270 and the washers 07Y-150, 07Y-160, 07Y-280 to the lavatory structure.

SUB TASK 25-41-51-410-083-D01
D2549020601000

4. Installation of the Housing (07Y-1)

(a) Attach the fittings 07Y-050 with the screws 07Y-060.

(b) Attach the cosmetics holder 07Y-360 with the screws 07Y-370 and the washers 07Y-380.

NOTE: For further instructions, see CMMV 25-20-08_C5307 (cosmetics holder).

(c) Attach the decor covers 07Y-170 with the screws 07Y-180, 07Y-190 to the housing assembly 07Y-010.

(d) Attach the screws 07Y-230 to the housing assembly 07Y-010.

(e) Attach the glass mirror 07Y-210 to the screws 07Y-230.

(f) Attach the stud 07Y-220 to the housing assembly 07Y-010.

(g) Attach the housing assembly 07Y-010 with the screws 07Y-130, 07Y-140, 07Y-270 and the washers 07Y-150, 07Y-160, 07Y-280 to the lavatory structure.

SUB TASK 25-41-51-410-083-E01
D2549020503600 D2549020504600 D2549020601400 D2549020601600 R225401133-000

5. Installation of the Housing (07Y-1)

(a) Attach the fittings 07Y-050 with the screws 07Y-060.

(b) Attach the bracket 07Y-300 with the screws 07Y-330, the washers 07Y-340 and the nuts 07Y-350 to the housing assembly 07Y-010.

(c) Attach the flower vase 07Y-290 with the screw 07Y-320 and the nut 07Y-310 to the bracket 07Y-300.

(d) Attach the decor covers 07Y-170 with the screws 07Y-180, 07Y-190 to the housing assembly 07Y-010.

(e) Attach the screws 07Y-230 to the housing assembly 07Y-010.

(f) Attach the glass mirror 07Y-210 to the screws 07Y-230.

(g) Attach the stud 07Y-220 to the housing assembly 07Y-010.

(h) Attach the housing assembly 07Y-010 with the screws 07Y-130, 07Y-140, 07Y-270 and the washers 07Y-150, 07Y-160, 07Y-280 to the lavatory structure.

SUB TASK 25-41-51-410-083-F01

D2549010401600 D2549010402400 D2549010403200 D2549010403800 D2549010404600 D2549010404800 D2549010405000 D2549010405200 D2549010405600 D2549010405800 D2549010406400 D2549010407000 D2549010610600 D2549020300400 D2549020301000 D2549020301600 D2549020302000 D2549020302800 D2549020401400 D2549020401600 D2549020402400 D2549020406800 D2549020407600 D2549020408000 D2549020408200 D2549020408800 D2549020409200 D2549020409400 D2549020410200 D2549020410400 D2549020411000 D2549020411200 D2549020411400 D2549020411600 D2549020411800 D2549020412000 D2549020412200 D2549020412400 D2549020412800 D2549020413000 D2549020413200 D2549020413400 D2549020413600 D2549020413800 D2549020414000 D2549020414200 D2549020414600 D2549020513200 D2549020606000 D2549020608800 D2549020706400 D2549020707800 D2549020708800 D2549020804400 D2549030410600 D2549030410800 D2549030411600 D2549030411800 D2549030412200 D2549030413400 D2549030414200 D2549030414600 D2549030414800 D2549030700600 D2549030700800 D2549030701000 D2549030701600 D2549030701800 D2549030702000 D2549030702200 D2549030702400 D2549030702600 D2549030702800 D2549030703000 D2549030703200 D2549030703400 D2549030703600 D2549030704000 D2549030704200 D2549030704400 D2549030704600 D2549030705600 D2549040501400 R225401136-008 R225401136-014 R225401183-004 R225401183-006 R225401196-024 R225401196-070 R225401602-000 R225401624-000 R225401627-000 R225401627-002 R225401627-004 R225401646-002 R225401673-006 R225401683-000 R225401685-000 R225401685-002 R225401691-002 R225401808-000 R225401811-000 R225401814-000

6. Installation of the Housing

(a) Not applicable.

TASK 25-41-51-400-819-A01

D2549010500400 D2549010500600 D2549010500800 D2549010501000 D2549010501200 D2549010501400 D2549010501600 D2549010501800 D2549010502200 D2549010502400 D2549010502800 D2549010503200 D2549010503400 D2549010503600 D2549010504600 D2549010506200 D2549010506400 D2549020500000 D2549020500400 D2549020500600 D2549020500800 D2549020501000 D2549020501200 D2549020501400 D2549020501800 D2549020502000 D2549020502800 D2549020503200 D2549020503400 D2549020504800 D2549030606000 R225401107-000 R225401146-000 R225401146-002 R225401611-008

184. Installation of the Side Wall

A. General

This task gives you the installation and assembly procedures of the component.

B. Job Set-up Information

(1) Consumable Materials

REFERENCE	DESIGNATION
08-007	Sealant, High Temperature

Table 7019
Consumable Materials

C. Procedure

WARNING: **BE CAREFUL WHEN YOU USE SOLVENTS/CLEANING AGENTS, SEALANTS AND OTHER MATERIALS. OBEY THE MATERIAL MANUFACTURER'S INSTRUCTIONS AND THE LOCAL REGULATIONS. MAKE SURE THAT THERE IS A GOOD FLOW OF AIR THROUGH THE WORK AREA. DO NOT BREATHE THE FUMES. DO NOT SMOKE. DO NOT USE THESE MATERIALS NEAR A FLAME, SPARKS OR SOURCES OF HEAT. USE PROTECTIVE CLOTHING, GOGGLES AND GLOVES. IF YOU GET ONE OF THESE MATERIALS ON YOUR SKIN OR IN YOUR EYES, FLUSH IT AWAY WITH A FLOW OF CLEAN WATER. IF YOU GET ONE OF THESE MATERIALS IN YOUR MOUTH, GET IMMEDIATE MEDICAL AID. IN GENERAL, THESE MATERIALS ARE POISONOUS, FLAMMABLE AND SKIN IRRITANTS.**

WARNING: **KEEP ALL HYDROCARBONS (FUELS, LUBRICANTS, ETC.) AWAY FROM ALL SOURCES OF OXYGEN. OXYGEN BECOMES EXPLOSIVE WHEN IT TOUCHES HYDROCARBONS.**

WARNING: **TO PREVENT CONTAMINATION OF THE OXYGEN SYSTEM, MAKE SURE THAT YOUR HANDS AND ALL THE TOOLS ARE CLEAN.**

CAUTION: **DO ALL THE WORK ON A CLEAN, SOFT SURFACE TO PREVENT DAMAGE TO THE COMPONENTS.**

CAUTION: **MAKE SURE THAT ALL THE PARTS ARE CLEAN BEFORE YOU ASSEMBLE THEM.**

SUB TASK 25-41-51-410-028-A01
D2549020500400 D2549020500800 D2549020501200 D2549020501800 D2549020502000

1. Installation of the Side Wall (06-1)

   (a) Attach the brackets 06-013, 06-017 to the aft side wall assembly 06-010.

   (b) Attach the fittings 06-020 with the screws 06-030 to the brackets 06-013.

   (c) Assemble the post assembly 06-190 as follows:

      1 Attach the screws 06-193.

   (d) Attach the post assembly 06-190 with the screws 06-200, 06-220, the washers 06-170 and the caps 06-210.

   (e) Attach the angles 06-150 with the screws 06-160 and the washers 06-170 to the aft side wall assembly 06-010.

   (f) Attach the oxygen container assy 06-155 with the screws 06-160 and the washers 06-170 to the angles 06-150.

   (g) Attach the ground cable in accordance with the Process and Material Specification PMS 01-04-58 to the oxygen container assy 06-155.

   (h) Attach the angle 06-120 with the screws 06-160 and the washers 06-170 to the aft side wall assembly 06-010.

   (i) Attach the cover oxygen container assy 06-110 with the screws 06-130 and the nuts 06-140 to the angle 06-120.

   (j) Attach the studs 06-180 and the washers 06-170 to the cover oxygen container assy 06-110.

   (k) Install and assemble the handle assembly 06-100 as follows:

      1 Attach the special screws 06-101 and the special washers 06-103 to the aft side wall assembly 06-010.

2 Attach the handle assembly 06-100 to the aft side wall assembly 06-010.

3 Attach the security pins 06-102 to the handle assembly 06-100.

SUB TASK 25-41-51-410-028-B01
D2549010500600 D2549010500800 D2549010501200 D2549010501400 R225401146-000 R225401146-002

2. Installation of the Side Wall (06-1)

(a) Attach the brackets 06-013, 06-017 to the aft side wall assembly 06-010.

(b) Attach the fittings 06-020 with the screws 06-030 to the brackets 06-013.

(c) Assemble the post assembly 06-190 as follows:

1 Attach the screws 06-193.

(d) Attach the post assembly 06-190 with the screws 06-200, 06-220, the washers 06-170 and the caps 06-210.

(e) Attach the angles 06-150 with the screws 06-160 and the washers 06-170 to the aft side wall assembly 06-010.

(f) Attach the oxygen container assy 06-155 with the screws 06-160, 06-162 and the washers 06-170, 06-172 to the angles 06-150.

(g) Attach the ground cable in accordance with the Process and Material Specification PMS 01-04-58 to the oxygen container assy 06-155.

(h) Attach the angle 06-120 with the screws 06-160 and the washers 06-170 to the aft side wall assembly 06-010.

(i) Attach the cover oxygen container assy 06-110 with the screws 06-130 and the nuts 06-140 to the angle 06-120.

(j) Attach the studs 06-180 and the washers 06-170 to the cover oxygen container assy 06-110.

(k) Install and assemble the handle assembly 06-100 as follows:

1 Attach the special screws 06-101 and the special washers 06-103 to the aft side wall assembly 06-010.

2 Attach the handle assembly 06-100 to the aft side wall assembly 06-010.

3 Attach the security pins 06-102 to the handle assembly 06-100.

SUB TASK 25-41-51-410-028-C01
D2549010501800 D2549010502200 D2549010503200 D2549010503600 D2549010506400

3. Installation of the Side Wall (06-1)

(a) Attach the brackets 06-013, 06-017 to the aft side wall assembly 06-010.

(b) Attach the fittings 06-020 with the screws 06-030 to the brackets 06-013.

(c) Assemble the post assembly 06-190 as follows:

1 Attach the screws 06-193.

(d) Attach the post assembly 06-190 with the screws 06-200, 06-220, the washers 06-170 and the caps 06-210.

(e) Attach the angles 06-150 with the screws 06-160 and the washers 06-170 to the aft side wall assembly 06-010.

(f) Attach the oxygen container assy 06-155 with the screws 06-160 and the washers 06-170 to the angles 06-150.

(g) Attach the ground cable in accordance with the Process and Material Specification PMS 01-04-58 to the oxygen container assy 06-155.

(h) Attach the angle 06-120 with the screws 06-160 and the washers 06-170 to the aft side wall assembly 06-010.

(i) Attach the cover oxygen container assy 06-110 with the screws 06-130 and the nuts 06-140 to the angle 06-120.

(j) Attach the studs 06-180 and the washers 06-170 to the cover oxygen container assy 06-110.

(k) Install and assemble the handle assembly 06-100 as follows:

1 Attach the special screws 06-101 and the special washers 06-103 to the aft side wall assembly 06-010.

2 Attach the handle assembly 06-100 to the aft side wall assembly 06-010.

3 Attach the security pins 06-102 to the handle assembly 06-100.

SUB TASK 25-41-51-410-028-D01
D2549010504600

4. Installation of the Side Wall (06-1)

(a) Attach the brackets 06-013, 06-017 to the aft side wall assembly 06-010.

(b) Attach the fittings 06-020 with the screws 06-030 to the brackets 06-013.

(c) Assemble the post assembly 06-190 as follows:

1 Attach the screws 06-193.

(d) Attach the post assembly 06-190 with the screws 06-200, 06-220, the washers 06-170 and the caps 06-210.

(e) Attach the angles 06-150 with the screws 06-160 and the washers 06-170 to the aft side wall assembly 06-010.

(f) Attach the oxygen container assy 06-155 with the screws 06-160 and the washers 06-170 to the angles 06-150.

(g) Attach the ground cable in accordance with the Process and Material Specification PMS 01-04-58 to the oxygen container assy 06-155.

(h) Attach the angle 06-120 with the screws 06-160 and the washers 06-170 to the aft side wall assembly 06-010.

(i) Attach the cover oxygen container assy 06-110 with the screws 06-130 and the nuts 06-140 to the angle 06-120.

(j) Attach the studs 06-180 and the washers 06-170 to the cover oxygen container assy 06-110.

(k) Install and assemble the handle assembly 06-100 as follows:

1 Attach the special screws 06-101 and the special washers 06-103 to the aft side wall assembly 06-010.

2 Attach the handle assembly 06-100 to the aft side wall assembly 06-010.

3 Attach the security pins 06-102 to the handle assembly 06-100.

SUB TASK 25-41-51-410-028-E01
D2549020503400

5. Installation of the Side Wall (06-1)

(a) Attach the brackets 06-013, 06-017 to the aft side wall assembly 06-010.

(b) Attach the fittings 06-020 with the screws 06-030 to the brackets 06-013.

(c) Assemble the post assembly 06-190 as follows:

1 Attach the screws 06-193.

(d) Attach the post assembly 06-190 with the screws 06-200, 06-220, the washers 06-170 and the caps 06-210.

(e) Assemble the single door emergency unlocking device assembly 06-320 as follows:

WARNING: BE CAREFUL WHEN YOU USE MATERIAL NO. 08-007 SEALANT, HIGH TEMPERATURE. OBEY THE MATERIAL MANUFACTURER'S INSTRUCTIONS.

1 Apply the Material No. 08-007 Sealant, High Temperature to the snap catch 06-370 and to the pin 06-360 and attach the emergency unlocking-device pivot 06-350, the snap catch 06-370 and the pin 06-360 to the emergency unlocking-device housing 06-330.

NOTE: Adjust the snap catch 06-370 a half turn before stop.

WARNING: BE CAREFUL WHEN YOU USE MATERIAL NO. 08-007 SEALANT, HIGH TEMPERATURE. OBEY THE MATERIAL MANUFACTURER'S INSTRUCTIONS.

2 Apply the Material No. 08-007 Sealant, High Temperature to the bolt 06-380 and attach the emergency unlocking-device strike 06-340 with the bolt 06-380 to the emergency unlocking-device housing 06-330.

(f) Attach the single door emergency unlocking device assembly 06-320 and the plates 06-390 with the screws 06-400 and the nuts 06-410 to the post assembly 06-190.

(g) Attach the angle 06-420 with the screws 06-440, 06-460 and the washers 06-430 to the aft side wall assembly 06-010.

(h) Attach the angles 06-150 with the screws 06-160 and the washers 06-170 to the aft side wall assembly 06-010.

(i) Attach the oxygen container assy 06-155 with the screws 06-160 and the washers 06-170 to the angles 06-150.

(j) Attach the ground cable in accordance with the Process and Material Specification PMS 01-04-58 to the oxygen container assy 06-155.

(k) Attach the angle 06-120 with the screws 06-160 and the washers 06-170 to the aft side wall assembly 06-010.

(l) Attach the cover oxygen container assy 06-110 with the screws 06-130 and the nuts 06-140 to the angle 06-120.

(m) Attach the studs 06-180 and the washers 06-170 to the cover oxygen container assy 06-110.

(n) Attach the support 06-250 with the screws 06-230 and the washers 06-240 to the aft side wall assembly 06-010.

(o) Install and assemble the handle assembly 06-100 as follows:

1 Attach the special screws 06-101 and the special washers 06-103 to the aft side wall assembly 06-010.

2 Attach the handle assembly 06-100 to the aft side wall assembly 06-010.

3 Attach the security pins 06-102 to the handle assembly 06-100.

SUB TASK 25-41-51-410-028-F01
D2549010501000 R225401107-000

6. Installation of the Side Wall (06-1)

(a) Attach the brackets 06-013, 06-017 to the aft side wall assembly 06-010.

(b) Attach the fittings 06-020 with the screws 06-030 to the brackets 06-013.

(c) Assemble the post assembly 06-190 as follows:

1 Attach the screws 06-193.

(d) Attach the post assembly 06-190 with the screws 06-200, 06-220, the washers 06-170 and the caps 06-210.

(e) Assemble the single door emergency unlocking device assembly 06-320 as follows:

WARNING: BE CAREFUL WHEN YOU USE MATERIAL NO. 08-007 SEALANT, HIGH TEMPERATURE. OBEY THE MATERIAL MANUFACTURER'S INSTRUCTIONS.

1 Apply the Material No. 08-007 Sealant, High Temperature to the snap catch 06-370 and to the pin 06-360 and attach the emergency unlocking-device pivot 06-350, the snap catch 06-370 and the pin 06-360 to the emergency unlocking-device housing 06-330.

NOTE: Adjust the snap catch 06-370 a half turn before stop.

WARNING: BE CAREFUL WHEN YOU USE MATERIAL NO. 08-007 SEALANT, HIGH TEMPERATURE. OBEY THE MATERIAL MANUFACTURER'S INSTRUCTIONS.

2 Apply the Material No. 08-007 Sealant, High Temperature to the bolt 06-380 and attach the emergency unlocking-device strike 06-340 with the bolt 06-380 to the emergency unlocking-device housing 06-330.

(f) Attach the single door emergency unlocking device assembly 06-320 and the plates 06-390 with the screws 06-400 and the nuts 06-410 to the post assembly 06-190.

(g) Attach the angles 06-150 with the screws 06-160 and the washers 06-170 to the aft side wall assembly 06-010.

(h) Attach the oxygen container assy 06-155 with the screws 06-160, 06-162 and the washers 06-170, 06-172 to the angles 06-150.

(i) Attach the ground cable in accordance with the Process and Material Specification PMS 01-04-58 to the oxygen container assy 06-155.

(j) Attach the angle 06-120 with the screws 06-160 and the washers 06-170 to the aft side wall assembly 06-010.

(k) Attach the cover oxygen container assy 06-110 with the screws 06-130 and the nuts 06-140 to the angle 06-120.

(l) Attach the studs 06-180 and the washers 06-170 to the cover oxygen container assy 06-110.

(m) Attach the support 06-250 with the screws 06-230 and the washers 06-240 to the aft side wall assembly 06-010.

(n) Install and assemble the handle assembly 06-100 as follows:

1 Attach the special screws 06-101 and the special washers 06-103 to the aft side wall assembly 06-010.

2 Attach the handle assembly 06-100 to the aft side wall assembly 06-010.

3 Attach the security pins 06-102 to the handle assembly 06-100.

SUB TASK 25-41-51-410-028-G01
D2549010502400

7. Installation of the Side Wall (06-1)

(a) Attach the brackets 06-013, 06-017 to the aft side wall assembly 06-010.

(b) Attach the fittings 06-020 with the screws 06-030 to the brackets 06-013.

(c) Assemble the post assembly 06-190 as follows:

1 Attach the screws 06-193.

(d) Attach the post assembly 06-190 with the screws 06-200, 06-220, the washers 06-170 and the caps 06-210.

(e) Assemble the single door emergency unlocking device assembly 06-320 as follows:

WARNING: BE CAREFUL WHEN YOU USE MATERIAL NO. 08-007 SEALANT, HIGH TEMPERATURE. OBEY THE MATERIAL MANUFACTURER'S INSTRUCTIONS.

1 Apply the Material No. 08-007 Sealant, High Temperature to the snap catch 06-370 and to the pin 06-360 and attach the emergency unlocking-device pivot 06-350, the snap catch 06-370 and the pin 06-360 to the emergency unlocking-device housing 06-330.

NOTE: Adjust the snap catch 06-370 a half turn before stop.

WARNING: BE CAREFUL WHEN YOU USE MATERIAL NO. 08-007 SEALANT, HIGH TEMPERATURE. OBEY THE MATERIAL MANUFACTURER'S INSTRUCTIONS.

2 Apply the Material No. 08-007 Sealant, High Temperature to the bolt 06-380 and attach the emergency unlocking-device strike 06-340 with the bolt 06-380 to the emergency unlocking-device housing 06-330.

(f) Attach the single door emergency unlocking device assembly 06-320 and the plates 06-390 with the screws 06-400 and the nuts 06-410 to the post assembly 06-190.

(g) Attach the angles 06-150 with the screws 06-160 and the washers 06-170 to the aft side wall assembly 06-010.

(h) Attach the oxygen container assy 06-155 with the screws 06-160 and the washers 06-170 to the angles 06-150.

(i) Attach the ground cable in accordance with the Process and Material Specification PMS 01-04-58 to the oxygen container assy 06-155.

(j) Attach the angle 06-120 with the screws 06-160 and the washers 06-170 to the aft side wall assembly 06-010.

(k) Attach the cover oxygen container assy 06-110 with the screws 06-130 and the nuts 06-140 to the angle 06-120.

(l) Attach the studs 06-180 and the washers 06-170 to the cover oxygen container assy 06-110.

(m) Attach the support 06-250 with the screws 06-230 and the washers 06-240 to the aft side wall assembly 06-010.

(n) Install and assemble the handle assembly 06-100 as follows:

1 Attach the special screws 06-101 and the special washers 06-103 to the aft side wall assembly 06-010.

2 Attach the handle assembly 06-100 to the aft side wall assembly 06-010.

3 Attach the security pins 06-102 to the handle assembly 06-100.

SUB TASK 25-41-51-410-028-H01
D2549010500400 D2549010501600 D2549010502800 D2549010503400 D2549010506200

8. Installation of the Side Wall (06-1)

(a) Attach the brackets 06-013, 06-017 to the aft side wall assembly 06-010.

(b) Attach the fittings 06-020 with the screws 06-030 to the brackets 06-013.

(c) Assemble the post assembly 06-190 as follows:

1 Attach the screws 06-193.

(d) Attach the post assembly 06-190 with the screws 06-200, 06-220, the washers 06-170 and the caps 06-210.

(e) Attach the angles 06-150 with the screws 06-160 and the washers 06-170 to the aft side wall assembly 06-010.

(f) Attach the oxygen container assy 06-155 with the screws 06-160 and the washers 06-170 to the angles 06-150.

(g) Attach the ground cable in accordance with the Process and Material Specification PMS 01-04-58 to the oxygen container assy 06-155.

(h) Attach the angle 06-120 with the screws 06-160 and the washers 06-170 to the aft side wall assembly 06-010.

(i) Attach the cover oxygen container assy 06-110 with the screws 06-130 and the nuts 06-140 to the angle 06-120.

(j) Attach the studs 06-180 and the washers 06-170 to the cover oxygen container assy 06-110.

(k) Install and assemble the handle assembly 06-270 as follows:

1 Attach the special screws 06-280 and the special washers 06-300 to the aft side wall assembly 06-010.

2 Attach the handle assembly 06-270 to the aft side wall assembly 06-010.

3 Attach the security pins 06-290 to the handle assembly 06-100.

(l) Install and assemble the handle assembly 06-100 as follows:

1 Attach the special screws 06-101 and the special washers 06-103 to the aft side wall assembly 06-010.

2 Attach the handle assembly 06-100 to the aft side wall assembly 06-010.

3 Attach the security pins 06-102 to the handle assembly 06-100.

SUB TASK 25-41-51-410-028-J01
D2549030606000 R225401611-008

9. Installation of the Side Wall (06-1)

(a) Attach the brackets 06-013, 06-017 to the aft side wall assembly 06-010.

(b) Attach the fittings 06-020 with the screws 06-030 to the brackets 06-013.

(c) Assemble the post assembly 06-190 as follows:

1 Attach the screws 06-193.

(d) Attach the post assembly 06-190 with the screws 06-200, 06-220, the washers 06-170 and the caps 06-210.

(e) Attach the angles 06-150 with the screws 06-160 and the washers 06-170 to the aft side wall assembly 06-010.

(f) Attach the oxygen container assy 06-155 with the screws 06-160 and the washers 06-170 to the angles 06-150.

(g) Attach the ground cable in accordance with the Process and Material Specification PMS 01-04-58 to the oxygen container assy 06-155.

(h) Attach the angle 06-120 with the screws 06-160 and the washers 06-170 to the aft side wall assembly 06-010.

(i) Attach the cover oxygen container assy 06-110 with the screws 06-130 and the nuts 06-140 to the angle 06-120.

(j) Attach the studs 06-180 and the washers 06-170 to the cover oxygen container assy 06-110.

(k) Install and assemble the handle assembly 06-270 as follows:

1 Attach the special screws 06-280 and the special washers 06-300 to the aft side wall assembly 06-010.

2 Attach the handle assembly 06-270 to the aft side wall assembly 06-010.

3 Attach the security pins 06-290 to the handle assembly 06-100.

(l) Install and assemble the handle assembly 06-100 as follows:

1 Attach the special screws 06-101 and the special washers 06-103 to the aft side wall assembly 06-010.

2 Attach the handle assembly 06-100 to the aft side wall assembly 06-010.

3 Attach the security pins 06-102 to the handle assembly 06-100.

SUB TASK 25-41-51-410-028-K01
D2549020500000 D2549020500600 D2549020501000 D2549020501400 D2549020502800 D2549020503200 D2549020504800

10. Installation of the Side Wall (06-1)

(a) Attach the brackets 06-013, 06-017 to the aft side wall assembly 06-010.

(b) Attach the fittings 06-020 with the screws 06-030 to the brackets 06-013.

(c) Assemble the post assembly 06-190 as follows:

1 Attach the screws 06-193.

(d) Attach the post assembly 06-190 with the screws 06-200, 06-220, the washers 06-170 and the caps 06-210.

(e) Attach the angle 06-420 with the screws 06-440, 06-460 and the washers 06-430 to the aft side wall assembly 06-010.

(f) Attach the angles 06-150 with the screws 06-160 and the washers 06-170 to the aft side wall assembly 06-010.

(g) Attach the oxygen container assy 06-155 with the screws 06-160 and the washers 06-170 to the angles 06-150.

(h) Attach the ground cable in accordance with the Process and Material Specification PMS 01-04-58 to the oxygen container assy 06-155.

(i) Attach the angle 06-120 with the screws 06-160 and the washers 06-170 to the aft side wall assembly 06-010.

(j) Attach the cover oxygen container assy 06-110 with the screws 06-130 and the nuts 06-140 to the angle 06-120.

(k) Attach the studs 06-180 and the washers 06-170 to the cover oxygen container assy 06-110.

(l) Install and assemble the handle assembly 06-100 as follows:

1 Attach the special screws 06-101 and the special washers 06-103 to the aft side wall assembly 06-010.

2 Attach the handle assembly 06-100 to the aft side wall assembly 06-010.

3 Attach the security pins 06-102 to the handle assembly 06-100.

TASK 25-41-51-400-819-B01
D2549010500000 D2549010502000 D2549010504800 D2549010505400 D2549010505800 D2549020500200 D2549020503800 D2549020505000 D2549020600200 D2549020601200 D2549020601400 D2549020601600 D2549020802000 D2549030500200 D2549030500400 D2549030501200 D2549030501600 D2549030503200 R225401133-000 R225401188-000 R225401188-002 R225401629-000 R225401629-002

185. Installation of the Side Wall

A. General

This task gives you the installation and assembly procedures of the component.

B. Job Set-up Information
(1) Consumable Materials

REFERENCE	DESIGNATION
08-007	Sealant, High Temperature

Table 7020
Consumable Materials

C. Procedure

WARNING: **BE CAREFUL WHEN YOU USE SOLVENTS/CLEANING AGENTS, SEALANTS AND OTHER MATERIALS. OBEY THE MATERIAL MANUFACTURER'S INSTRUCTIONS AND THE LOCAL REGULATIONS. MAKE SURE THAT THERE IS A GOOD FLOW OF AIR THROUGH THE WORK AREA. DO NOT BREATHE THE FUMES. DO NOT SMOKE. DO NOT USE THESE MATERIALS NEAR A FLAME, SPARKS OR SOURCES OF HEAT. USE PROTECTIVE CLOTHING, GOGGLES AND GLOVES. IF YOU GET ONE OF THESE MATERIALS ON YOUR SKIN OR IN YOUR EYES, FLUSH IT AWAY WITH A FLOW OF CLEAN WATER. IF YOU GET ONE OF THESE MATERIALS IN YOUR MOUTH, GET IMMEDIATE MEDICAL AID. IN GENERAL, THESE MATERIALS ARE POISONOUS, FLAMMABLE AND SKIN IRRITANTS.**

WARNING: **KEEP ALL HYDROCARBONS (FUELS, LUBRICANTS, ETC.) AWAY FROM ALL SOURCES OF OXYGEN. OXYGEN BECOMES EXPLOSIVE WHEN IT TOUCHES HYDROCARBONS.**

WARNING: **TO PREVENT CONTAMINATION OF THE OXYGEN SYSTEM, MAKE SURE THAT YOUR HANDS AND ALL THE TOOLS ARE CLEAN.**

CAUTION: **DO ALL THE WORK ON A CLEAN, SOFT SURFACE TO PREVENT DAMAGE TO THE COMPONENTS.**

CAUTION: **MAKE SURE THAT ALL THE PARTS ARE CLEAN BEFORE YOU ASSEMBLE THEM.**

SUB TASK 25-41-51-410-029-A01
D2549020601200

1. Installation of the Side Wall (06A-1)

   (a) Attach the brackets 06A-013, 06A-017 to the aft side wall assembly 06A-010.

   (b) Attach the fittings 06A-021, 06A-025 with the screws 06A-030, 06A-033, 06A-035 to the brackets 06A-013.

   (c) Assemble the post assembly 06A-210 as follows:

      1 Attach the screws 06A-213.

   (d) Attach the post assembly 06A-210 with the screws 06A-220, 06A-240, the washers 06A-190 and the caps 06A-230.

   (e) Attach the angle 06A-290 with the screws 06A-300, 06A-320 and the washers 06A-310 to the aft side wall assembly 06A-010.

   (f) Attach the angles 06A-160 with the screws 06A-180 and the washers 06A-190 to the aft side wall assembly 06A-010.

   (g) Attach the oxygen container assy 06A-170 with the screws 06A-180 and the washers 06A-190 to the angles 06A-160.

   (h) Attach the ground cable in accordance with the Process and Material Specification PMS 01-04-58 to the oxygen container assy 06A-170.

   (i) Attach the angle 06A-130 with the screws 06A-180 and the washers 06A-190 to the aft side wall assembly 06A-010.

   (j) Attach the cover oxygen container assy 06A-120 with the screws 06A-140 and the nuts 06A-150 to the angle 06A-130.

   (k) Attach the studs 06A-200 and the washers 06A-190 to the cover oxygen container assy 06A-120.

   (l) Attach the screws 06A-260 to the aft side wall assembly 06A-010.

   (m) Attach the toilet seat cover dispenser 06A-250 to the screws 06A-260.

(n) Install and assemble the handle assembly 06A-110 as follows:

1 Attach the special screws 06A-111 and the special washers 06A-113 to the aft side wall assembly 06A-010.

2 Attach the handle assembly 06A-110 to the aft side wall assembly 06A-010.

3 Attach the security pins 06A-112 to the handle assembly 06A-110.

SUB TASK 25-41-51-410-029-B01
D2549030500200 D2549030501600 D2549030503200

2. Installation of the Side Wall (06A-1)

(a) Attach the brackets 06A-013, 06A-017 to the aft side wall assembly 06A-010.

(b) Attach the fittings 06A-020 with the screws 06A-030 to the brackets 06A-013.

(c) Assemble the post assembly 06A-210 as follows:

1 Attach the screws 06A-213.

(d) Attach the post assembly 06A-210 with the screws 06A-220, 06A-240, the washers 06A-190 and the caps 06A-230.

(e) Attach the angles 06A-160 with the screws 06A-180 and the washers 06A-190 to the aft side wall assembly 06A-010.

(f) Attach the oxygen container assy 06A-170 with the screws 06A-180 and the washers 06A-190 to the angles 06A-160.

(g) Attach the ground cable in accordance with the Process and Material Specification PMS 01-04-58 to the oxygen container assy 06A-170.

(h) Attach the angle 06A-130 with the screws 06A-180 and the washers 06A-190 to the aft side wall assembly 06A-010.

(i) Attach the cover oxygen container assy 06A-120 with the screws 06A-140 and the nuts 06A-150 to the angle 06A-130.

(j) Attach the studs 06A-200 and the washers 06A-190 to the cover oxygen container assy 06A-120.

(k) Attach the support 06A-270 with the screws 06A-221 and the washers 06A-191 to the aft side wall assembly 06A-010.

(l) Install and assemble the handle assembly 06A-110 as follows:

1 Attach the special screws 06A-111 and the special washers 06A-113 to the aft side wall assembly 06A-010.

2 Attach the handle assembly 06A-110 to the aft side wall assembly 06A-010.

3 Attach the security pins 06A-112 to the handle assembly 06A-110.

SUB TASK 25-41-51-410-029-C01
D2549010502000

3. Installation of the Side Wall (06A-1)

(a) Attach the brackets 06A-013, 06A-017 to the aft side wall assembly 06A-010.

(b) Attach the screws 06A-030 to the brackets 06A-013.

(c) Assemble the post assembly 06A-210 as follows:

1 Attach the screws 06A-213.

(d) Attach the post assembly 06A-210 with the screws 06A-220, 06A-240, the washers 06A-190 and the caps 06A-230.

(e) Assemble the single door emergency unlocking device assembly 06A-340 as follows:

WARNING: BE CAREFUL WHEN YOU USE MATERIAL NO. 08-007 SEALANT, HIGH TEMPERATURE. OBEY THE MATERIAL MANUFACTURER'S INSTRUCTIONS.

1 Apply the Material No. 08-007 Sealant, High Temperature to the snap catch 06A-390 and to the pin 06A-380 and attach the emergency unlocking-device pivot 06A-370, the snap catch 06A-390 and the pin 06A-380 to the emergency unlocking-device housing 06A-350.

NOTE: Adjust the snap catch 06A-390 a half turn before stop.

WARNING: **BE CAREFUL WHEN YOU USE MATERIAL NO. 08-007 SEALANT, HIGH TEMPERATURE. OBEY THE MATERIAL MANUFACTURER'S INSTRUCTIONS.**

2 Apply the Material No. 08-007 Sealant, High Temperature to the bolt 06A-400 and attach the emergency unlocking-device strike 06A-360 with the bolt 06A-400 to the emergency unlocking-device housing 06A-350.

(f) Attach the single door emergency unlocking device assembly 06A-340 and the plates 06A-410 with the screws 06A-420 and the nuts 06A-430 to the post assembly 06A-210.

(g) Attach the angles 06A-160 with the screws 06A-180 and the washers 06A-190 to the aft side wall assembly 06A-010.

(h) Attach the oxygen container assy 06A-170 with the screws 06A-180 and the washers 06A-190 to the angles 06A-160.

(i) Attach the ground cable in accordance with the Process and Material Specification PMS 01-04-58 to the oxygen container assy 06A-170.

(j) Attach the angle 06A-130 with the screws 06A-180 and the washers 06A-190 to the aft side wall assembly 06A-010.

(k) Attach the cover oxygen container assy 06A-120 with the screws 06A-140 and the nuts 06A-150 to the angle 06A-130.

(l) Attach the studs 06A-200 and the washers 06A-190 to the cover oxygen container assy 06A-120.

(m) Attach the support 06A-270 with the screws 06A-221 and the washers 06A-191 to the aft side wall assembly 06A-010.

(n) Install and assemble the handle assembly 06A-110 as follows:

1 Attach the special screws 06A-111 and the special washers 06A-113 to the aft side wall assembly 06A-010.

2 Attach the handle assembly 06A-110 to the aft side wall assembly 06A-010.

3 Attach the security pins 06A-112 to the handle assembly 06A-110.

SUB TASK 25-41-51-410-029-D01
D2549010505800

4. Installation of the Side Wall (06A-1)

(a) Attach the brackets 06A-013, 06A-017 to the aft side wall assembly 06A-010.

(b) Attach the fittings 06A-020 with the screws 06A-030 to the brackets 06A-013.

(c) Assemble the post assembly 06A-210 as follows:

1 Attach the screws 06A-213.

(d) Attach the post assembly 06A-210 with the screws 06A-220, 06A-240, the washers 06A-190 and the caps 06A-230.

(e) Attach the angles 06A-160 with the screws 06A-180 and the washers 06A-190 to the aft side wall assembly 06A-010.

(f) Attach the oxygen container assy 06A-170 with the screws 06A-180 and the washers 06A-190 to the angles 06A-160.

(g) Attach the ground cable in accordance with the Process and Material Specification PMS 01-04-58 to the oxygen container assy 06A-170.

(h) Attach the angle 06A-130 with the screws 06A-180 and the washers 06A-190 to the aft side wall assembly 06A-010.

(i) Attach the cover oxygen container assy 06A-120 with the screws 06A-140 and the nuts 06A-150 to the angle 06A-130.

(j) Attach the studs 06A-200 and the washers 06A-190 to the cover oxygen container assy 06A-120.

(k) Attach the screws 06A-260 to the aft side wall assembly 06A-010.

(l) Attach the toilet seat cover dispenser 06A-250 to the screws 06A-260.

(m) Install and assemble the handle assembly 06A-110 as follows:

1 Attach the special screws 06A-111 and the special washers 06A-113 to the aft side wall assembly 06A-010.

2 Attach the handle assembly 06A-110 to the aft side wall assembly 06A-010.

3 Attach the security pins 06A-112 to the handle assembly 06A-110.

SUB TASK 25-41-51-410-029-E01
D2549010500000 D2549020601400 D2549020802000 R225401629-000 R225401629-002

5. Installation of the Side Wall (06A-1)

(a) Attach the brackets 06A-013, 06A-017 to the aft side wall assembly 06A-010.

(b) Attach the fittings 06A-020 with the screws 06A-030 to the brackets 06A-013.

(c) Assemble the post assembly 06A-210 as follows:

1 Attach the screws 06A-213.

(d) Attach the post assembly 06A-210 with the screws 06A-220, 06A-240, the washers 06A-190 and the caps 06A-230.

(e) Assemble the single door emergency unlocking device assembly 06A-340 as follows:

WARNING: BE CAREFUL WHEN YOU USE MATERIAL NO. 08-007 SEALANT, HIGH TEMPERATURE. OBEY THE MATERIAL MANUFACTURER'S INSTRUCTIONS.

1 Apply the Material No. 08-007 Sealant, High Temperature to the snap catch 06A-390 and to the pin 06A-380 and attach the emergency unlocking-device pivot 06A-370, the snap catch 06A-390 and the pin 06A-380 to the emergency unlocking-device housing 06A-350.

NOTE: Adjust the snap catch 06A-390 a half turn before stop.

WARNING: BE CAREFUL WHEN YOU USE MATERIAL NO. 08-007 SEALANT, HIGH TEMPERATURE. OBEY THE MATERIAL MANUFACTURER'S INSTRUCTIONS.

2 Apply the Material No. 08-007 Sealant, High Temperature to the bolt 06A-400 and attach the emergency unlocking-device strike 06A-360 with the bolt 06A-400 to the emergency unlocking-device housing 06A-350.

(f) Attach the single door emergency unlocking device assembly 06A-340 and the plates 06A-410 with the screws 06A-420 and the nuts 06A-430 to the post assembly 06A-210.

(g) Attach the angles 06A-160 with the screws 06A-180 and the washers 06A-190 to the aft side wall assembly 06A-010.

(h) Attach the oxygen container assy 06A-170 with the screws 06A-180, 06A-182 and the washers 06A-190, 06A-192 to the angles 06A-160.

(i) Attach the ground cable in accordance with the Process and Material Specification PMS 01-04-58 to the oxygen container assy 06A-170.

(j) Attach the angle 06A-130 with the screws 06A-180 and the washers 06A-190 to the aft side wall assembly 06A-010.

(k) Attach the cover oxygen container assy 06A-120 with the screws 06A-140 and the nuts 06A-150 to the angle 06A-130.

(l) Attach the studs 06A-200 and the washers 06A-190 to the cover oxygen container assy 06A-120.

(m) Install and assemble the handle assembly 06A-110 as follows:

1 Attach the special screws 06A-111 and the special washers 06A-113 to the aft side wall assembly 06A-010.

2 Attach the handle assembly 06A-110 to the aft side wall assembly 06A-010.

3 Attach the security pins 06A-112 to the handle assembly 06A-110.

SUB TASK 25-41-51-410-029-F01
D2549020500200

6. Installation of the Side Wall (06A-1)

(a) Attach the brackets 06A-013, 06A-017 to the aft side wall assembly 06A-010.

(b) Attach the fittings 06A-020 with the screws 06A-030 to the brackets 06A-013.

(c) Assemble the post assembly 06A-210 as follows:

1 Attach the screws 06A-213.

(d) Attach the post assembly 06A-210 with the screws 06A-220, 06A-240, the washers 06A-190 and the caps 06A-230.

(e) Assemble the single door emergency unlocking device assembly 06A-340 as follows:

WARNING: BE CAREFUL WHEN YOU USE MATERIAL NO. 08-007 SEALANT, HIGH TEMPERATURE. OBEY THE MATERIAL MANUFACTURER'S INSTRUCTIONS.

1 Apply the Material No. 08-007 Sealant, High Temperature to the snap catch 06A-390 and to the pin 06A-380 and attach the emergency unlocking-device pivot 06A-370, the snap catch 06A-390 and the pin 06A-380 to the emergency unlocking-device housing 06A-350.

NOTE: Adjust the snap catch 06A-390 a half turn before stop.

WARNING: BE CAREFUL WHEN YOU USE MATERIAL NO. 08-007 SEALANT, HIGH TEMPERATURE. OBEY THE MATERIAL MANUFACTURER'S INSTRUCTIONS.

2 Apply the Material No. 08-007 Sealant, High Temperature to the bolt 06A-400 and attach the emergency unlocking-device strike 06A-360 with the bolt 06A-400 to the emergency unlocking-device housing 06A-350.

(f) Attach the single door emergency unlocking device assembly 06A-340 and the plates 06A-410 with the screws 06A-420 and the nuts 06A-430 to the post assembly 06A-210.

(g) Attach the angles 06A-160 with the screws 06A-180 and the washers 06A-190 to the aft side wall assembly 06A-010.

(h) Attach the oxygen container assy 06A-170 with the screws 06A-180 and the washers 06A-190 to the angles 06A-160.

(i) Attach the ground cable in accordance with the Process and Material Specification PMS 01-04-58 to the oxygen container assy 06A-170.

(j) Attach the angle 06A-130 with the screws 06A-180 and the washers 06A-190 to the aft side wall assembly 06A-010.

(k) Attach the cover oxygen container assy 06A-120 with the screws 06A-140 and the nuts 06A-150 to the angle 06A-130.

(l) Attach the studs 06A-200 and the washers 06A-190 to the cover oxygen container assy 06A-120.

(m) Install and assemble the handle assembly 06A-110 as follows:

1 Attach the special screws 06A-111 and the special washers 06A-113 to the aft side wall assembly 06A-010.

2 Attach the handle assembly 06A-110 to the aft side wall assembly 06A-010.

3 Attach the security pins 06A-112 to the handle assembly 06A-110.

SUB TASK 25-41-51-410-029-G01
D2549010504800 D2549010505400 D2549020503800 D2549020505000 D2549020600200

7. Installation of the Side Wall (06A-1)

(a) Attach the brackets 06A-013, 06A-017 to the aft side wall assembly 06A-010.

(b) Attach the fittings 06A-020 with the screws 06A-030 to the brackets 06A-013.

(c) Assemble the post assembly 06A-210 as follows:

1 Attach the screws 06A-213.

(d) Attach the post assembly 06A-210 with the screws 06A-220, 06A-240, the washers 06A-190 and the caps 06A-230.

(e) Attach the angles 06A-160 with the screws 06A-180 and the washers 06A-190 to the aft side wall assembly 06A-010.

(f) Attach the oxygen container assy 06A-170 with the screws 06A-180 and the washers 06A-190 to the angles 06A-160.

(g) Attach the ground cable in accordance with the Process and Material Specification PMS 01-04-58 to the oxygen container assy 06A-170.

(h) Attach the angle 06A-130 with the screws 06A-180 and the washers 06A-190 to the aft side wall assembly 06A-010.

(i) Attach the cover oxygen container assy 06A-120 with the screws 06A-140 and the nuts 06A-150 to the angle 06A-130.

(j) Attach the studs 06A-200 and the washers 06A-190 to the cover oxygen container assy 06A-120.

(k) Install and assemble the handle assembly 06A-110 as follows:

1 Attach the special screws 06A-111 and the special washers 06A-113 to the aft side wall assembly 06A-010.

2 Attach the handle assembly 06A-110 to the aft side wall assembly 06A-010.

3 Attach the security pins 06A-112 to the handle assembly 06A-110.

SUB TASK 25-41-51-410-029-H01
D2549030500400 D2549030501200 R225401188-000 R225401188-002

8. Installation of the Side Wall (06A-1)

(a) Attach the brackets 06A-013, 06A-017 to the aft side wall assembly 06A-010.

(b) Attach the fittings 06A-020 with the screws 06A-030 to the brackets 06A-013.

(c) Assemble the post assembly 06A-210 as follows:

1 Attach the screws 06A-213.

(d) Attach the post assembly 06A-210 with the screws 06A-220, 06A-240, the washers 06A-190 and the caps 06A-230.

(e) Attach the angles 06A-160 with the screws 06A-180 and the washers 06A-190 to the aft side wall assembly 06A-010.

(f) Attach the oxygen container assy 06A-170 with the screws 06A-180, 06A-182 and the washers 06A-190, 06A-192 to the angles 06A-160.

(g) Attach the ground cable in accordance with the Process and Material Specification PMS 01-04-58 to the oxygen container assy 06A-170.

(h) Attach the angle 06A-130 with the screws 06A-180 and the washers 06A-190 to the aft side wall assembly 06A-010.

(i) Attach the cover oxygen container assy 06A-120 with the screws 06A-140 and the nuts 06A-150 to the angle 06A-130.

(j) Attach the studs 06A-200 and the washers 06A-190 to the cover oxygen container assy 06A-120.

(k) Install and assemble the handle assembly 06A-110 as follows:

1 Attach the special screws 06A-111 and the special washers 06A-113 to the aft side wall assembly 06A-010.

2 Attach the handle assembly 06A-110 to the aft side wall assembly 06A-010.

3 Attach the security pins 06A-112 to the handle assembly 06A-110.

SUB TASK 25-41-51-410-029-J01
D2549020601600 R225401133-000

9. Installation of the Side Wall (06A-1)

(a) Attach the brackets 06A-013, 06A-017 to the aft side wall assembly 06A-010.

(b) Attach the fittings 06A-020 with the screws 06A-030 to the brackets 06A-013.

(c) Assemble the post assembly 06A-210 as follows:

1 Attach the screws 06A-213.

(d) Attach the post assembly 06A-210 with the screws 06A-220, 06A-240, the washers 06A-190 and the caps 06A-230.

(e) Attach the angles 06A-160 with the screws 06A-180 and the washers 06A-190 to the aft side wall assembly 06A-010.

(f) Attach the oxygen container assy 06A-170 with the screws 06A-180 and the washers 06A-190 to the angles 06A-160.

(g) Attach the ground cable in accordance with the Process and Material Specification PMS 01-04-58 to the oxygen container assy 06A-170.

(h) Attach the angle 06A-130 with the screws 06A-180 and the washers 06A-190 to the aft side wall assembly 06A-010.

(i) Attach the cover oxygen container assy 06A-120 with the screws 06A-140 and the nuts 06A-150 to the angle 06A-130.

(j) Attach the studs 06A-200 and the washers 06A-190 to the cover oxygen container assy 06A-120.

(k) Install and assemble the handle assembly 06A-110 as follows:

1 Attach the special screws 06A-111 and the special washers 06A-113 to the aft side wall assembly 06A-010.

2 Attach the handle assembly 06A-110 to the aft side wall assembly 06A-010.

3 Attach the security pins 06A-112 to the handle assembly 06A-110.

TASK 25-41-51-400-819-C01

D2549010502600 D2549010503800 D2549010506000 D2549010507200 D2549010507600 D2549010510200 D2549020501600 D2549020502400 D2549020502600 D2549020503000 D2549020503600 D2549020504400 D2549020504600 D2549020600000 D2549020604000 D2549030500600 D2549030500800 D2549030501400 D2549030502000 D2549030502800 D2549030503000 R225401107-004 R225401115-002 R225401188-004

186. Installation of the Side Wall

A. General

This task gives you the installation and assembly procedures of the component.

B. Job Set-up Information

(1) Not applicable

C. Procedure

WARNING: BE CAREFUL WHEN YOU USE SOLVENTS/CLEANING AGENTS, SEALANTS AND OTHER MATERIALS. OBEY THE MATERIAL MANUFACTURER'S INSTRUCTIONS AND THE LOCAL REGULATIONS. MAKE SURE THAT THERE IS A GOOD FLOW OF AIR THROUGH THE WORK AREA. DO NOT BREATHE THE FUMES. DO NOT SMOKE. DO NOT USE THESE MATERIALS NEAR A FLAME, SPARKS OR SOURCES OF HEAT. USE PROTECTIVE CLOTHING, GOGGLES AND GLOVES. IF YOU GET ONE OF THESE MATERIALS ON YOUR SKIN OR IN YOUR EYES, FLUSH IT AWAY WITH A FLOW OF CLEAN WATER. IF YOU GET ONE OF THESE MATERIALS IN YOUR MOUTH, GET IMMEDIATE MEDICAL AID. IN GENERAL, THESE MATERIALS ARE POISONOUS, FLAMMABLE AND SKIN IRRITANTS.

WARNING: KEEP ALL HYDROCARBONS (FUELS, LUBRICANTS, ETC.) AWAY FROM ALL SOURCES OF OXYGEN. OXYGEN BECOMES EXPLOSIVE WHEN IT TOUCHES HYDROCARBONS.

WARNING: TO PREVENT CONTAMINATION OF THE OXYGEN SYSTEM, MAKE SURE THAT YOUR HANDS AND ALL THE TOOLS ARE CLEAN.

CAUTION: DO ALL THE WORK ON A CLEAN, SOFT SURFACE TO PREVENT DAMAGE TO THE COMPONENTS.

CAUTION: MAKE SURE THAT ALL THE PARTS ARE CLEAN BEFORE YOU ASSEMBLE THEM.

SUB TASK 25-41-51-410-030-A01
D2549020504400 R225401115-002

1. Installation of the Side Wall (06B-1)

   (a) Attach the brackets 06B-013, 06B-017 to the aft side wall assembly 06B-010.

   (b) Attach the fittings 06B-020 with the screws 06B-030 to the brackets 06B-013.

   (c) Assemble the post assembly 06B-210 as follows:

      1 Attach the screws 06B-213.

   (d) Attach the post assembly 06B-210 with the screws 06B-220, 06B-240, the washers 06B-190 and the caps 06B-230.

   (e) Attach the angles 06B-160 with the screws 06B-180 and the washers 06B-190 to the aft side wall assembly 06B-010.

   (f) Attach the oxygen container assy 06B-170 with the screws 06B-180, 06B-185 and the washers 06B-190, 06B-195 to the angles 06B-160.

   (g) Attach the ground cable in accordance with the Process and Material Specification PMS 01-04-58 to the oxygen container assy 06B-170.

   (h) Attach the angle 06B-130 with the screws 06B-180 and the washers 06B-190 to the aft side wall assembly 06B-010.

   (i) Attach the cover oxygen container assy 06B-120 with the screws 06B-140 and the nuts 06B-150 to the angle 06B-130.

   (j) Attach the studs 06B-200 and the washers 06B-190 to the cover oxygen container assy 06B-120.

   (k) Attach the support 06B-270 with the screws 06B-280 and the washers 06B-290 to the aft side wall assembly 06B-010.

   (l) Install and assemble the handle assembly 06B-110 as follows:

      1 Attach the special screws 06B-111 and the special washers 06B-113 to the aft side wall assembly 06B-010.

      2 Attach the handle assembly 06B-110 to the aft side wall assembly 06B-010.

3 Attach the security pins 06B-112 to the handle assembly 06B-110.

SUB TASK 25-41-51-410-030-B01
D2549020503000

2. Installation of the Side Wall (06B-1)

(a) Attach the brackets 06B-013, 06B-017 to the aft side wall assembly 06B-010.

(b) Attach the fittings 06B-020 with the screws 06B-030 to the brackets 06B-013.

(c) Assemble the post assembly 06B-210 as follows:

1 Attach the screws 06B-213.

(d) Attach the post assembly 06B-210 with the screws 06B-220, 06B-240, the washers 06B-190 and the caps 06B-230.

(e) Attach the angle 06B-420 with the screws 06B-440, 06B-460 and the washers 06B-430 to the aft side wall assembly 06B-010.

(f) Attach the angles 06B-160 with the screws 06B-180 and the washers 06B-190 to the aft side wall assembly 06B-010.

(g) Attach the oxygen container assy 06B-170 with the screws 06B-180 and the washers 06B-190 to the angles 06B-160.

(h) Attach the ground cable in accordance with the Process and Material Specification PMS 01-04-58 to the oxygen container assy 06B-170.

(i) Attach the angle 06B-130 with the screws 06B-180 and the washers 06B-190 to the aft side wall assembly 06B-010.

(j) Attach the cover oxygen container assy 06B-120 with the screws 06B-140 and the nuts 06B-150 to the angle 06B-130.

(k) Attach the studs 06B-200 and the washers 06B-190 to the cover oxygen container assy 06B-120.

(l) Attach the support 06B-270 with the screws 06B-280 and the washers 06B-290 to the aft side wall assembly 06B-010.

(m) Install and assemble the handle assembly 06B-110 as follows:

1 Attach the special screws 06B-111 and the special washers 06B-113 to the aft side wall assembly 06B-010.

2 Attach the handle assembly 06B-110 to the aft side wall assembly 06B-010.

3 Attach the security pins 06B-112 to the handle assembly 06B-110.

SUB TASK 25-41-51-410-030-C01
D2549030502800

3. Installation of the Side Wall (06B-1)

(a) Attach the brackets 06B-013, 06B-017 to the aft side wall assembly 06B-010.

(b) Attach the fittings 06B-020 with the screws 06B-030 to the brackets 06B-013.

(c) Assemble the post assembly 06B-210 as follows:

1 Attach the screws 06B-213.

(d) Attach the post assembly 06B-210 with the screws 06B-220, 06B-240, the washers 06B-190 and the caps 06B-230.

(e) Attach the angle 06B-420 with the screws 06B-440, 06B-460 and the washers 06B-430 to the aft side wall assembly 06B-010.

(f) Attach the angles 06B-160 with the screws 06B-180 and the washers 06B-190 to the aft side wall assembly 06B-010.

(g) Attach the oxygen container assy 06B-170 with the screws 06B-180 and the washers 06B-190 to the angles 06B-160.

(h) Attach the ground cable in accordance with the Process and Material Specification PMS 01-04-58 to the oxygen container assy 06B-170.

(i) Attach the angle 06B-130 with the screws 06B-180 and the washers 06B-190 to the aft side wall assembly 06B-010.

(j) Attach the cover oxygen container assy 06B-120 with the screws 06B-140 and the nuts 06B-150 to the angle 06B-130.

(k) Attach the studs 06B-200 and the washers 06B-190 to the cover oxygen container assy 06B-120.

(l) Attach the screws 06B-260 to the aft side wall assembly 06B-010.

(m) Attach the toilet seat cover dispenser 06B-250 to the screws 06B-260.

(n) Install and assemble the handle assembly 06B-110 as follows:

1 Attach the special screws 06B-111 and the special washers 06B-113 to the aft side wall assembly 06B-010.

2 Attach the handle assembly 06B-110 to the aft side wall assembly 06B-010.

3 Attach the security pins 06B-112 to the handle assembly 06B-110.

SUB TASK 25-41-51-410-030-D01
D2549020501600

4. Installation of the Side Wall (06B-1)

(a) Attach the brackets 06B-013, 06B-017 to the aft side wall assembly 06B-010.

(b) Attach the fittings 06B-020 with the screws 06B-030 to the brackets 06B-013.

(c) Assemble the post assembly 06B-210 as follows:

1 Attach the screws 06B-213.

(d) Attach the post assembly 06B-210 with the screws 06B-220, 06B-240, the washers 06B-190 and the caps 06B-230.

(e) Attach the angle 06B-420 with the screws 06B-440, 06B-460 and the washers 06B-430 to the aft side wall assembly 06B-010.

(f) Attach the angles 06B-160 with the screws 06B-180 and the washers 06B-190 to the aft side wall assembly 06B-010.

(g) Attach the oxygen container assy 06B-170 with the screws 06B-180 and the washers 06B-190 to the angles 06B-160.

(h) Attach the ground cable in accordance with the Process and Material Specification PMS 01-04-58 to the oxygen container assy 06B-170.

(i) Attach the angle 06B-130 with the screws 06B-180 and the washers 06B-190 to the aft side wall assembly 06B-010.

(j) Attach the cover oxygen container assy 06B-120 with the screws 06B-140 and the nuts 06B-150 to the angle 06B-130.

(k) Attach the studs 06B-200 and the washers 06B-190 to the cover oxygen container assy 06B-120.

(l) Attach the screws 06B-260 to the aft side wall assembly 06B-010.

(m) Attach the toilet seat cover dispenser 06B-250 to the screws 06B-260.

(n) Install and assemble the handle assembly 06B-110 as follows:

1 Attach the special screws 06B-111 and the special washers 06B-113 to the aft side wall assembly 06B-010.

2 Attach the handle assembly 06B-110 to the aft side wall assembly 06B-010.

3 Attach the security pins 06B-112 to the handle assembly 06B-110.

SUB TASK 25-41-51-410-030-E01
D2549020600000 D2549030500800 R225401188-004

5. Installation of the Side Wall (06B-1)

(a) Attach the brackets 06B-013, 06B-017 to the aft side wall assembly 06B-010.

(b) Attach the fittings 06B-020 with the screws 06B-030 to the brackets 06B-013.

(c) Assemble the post assembly 06B-210 as follows:

1 Attach the screws 06B-213.

(d) Attach the post assembly 06B-210 with the screws 06B-220, 06B-240, the washers 06B-190 and the caps 06B-230.

(e) Attach the angles 06B-160 with the screws 06B-180 and the washers 06B-190 to the aft side wall assembly 06B-010.

(f) Attach the oxygen container assy 06B-170 with the screws 06B-180, 06B-185 and the washers 06B-190, 06B-195 to the angles 06B-160.

(g) Attach the ground cable in accordance with the Process and Material Specification PMS 01-04-58 to the oxygen container assy 06B-170.

(h) Attach the angle 06B-130 with the screws 06B-180 and the washers 06B-190 to the aft side wall assembly 06B-010.

(i) Attach the cover oxygen container assy 06B-120 with the screws 06B-140 and the nuts 06B-150 to the angle 06B-130.

(j) Attach the studs 06B-200 and the washers 06B-190 to the cover oxygen container assy 06B-120.

(k) Attach the screws 06B-260 to the aft side wall assembly 06B-010.

(l) Attach the toilet seat cover dispenser 06B-250 to the screws 06B-260.

(m) Install and assemble the handle assembly 06B-110 as follows:

1 Attach the special screws 06B-111 and the special washers 06B-113 to the aft side wall assembly 06B-010.

2 Attach the handle assembly 06B-110 to the aft side wall assembly 06B-010.

3 Attach the security pins 06B-112 to the handle assembly 06B-110.

SUB TASK 25-41-51-410-030-F01
D2549030502000

6. Installation of the Side Wall (06B-1)

(a) Attach the brackets 06B-013, 06B-017 to the aft side wall assembly 06B-010.

(b) Attach the fittings 06B-020 with the screws 06B-030 to the brackets 06B-013.

(c) Assemble the post assembly 06B-210 as follows:

1 Attach the screws 06B-213.

(d) Attach the post assembly 06B-210 with the screws 06B-220, 06B-240, the washers 06B-190 and the caps 06B-230.

(e) Attach the angles 06B-160 with the screws 06B-180 and the washers 06B-190 to the aft side wall assembly 06B-010.

(f) Attach the oxygen container assy 06B-170 with the screws 06B-180 and the washers 06B-190 to the angles 06B-160.

(g) Attach the ground cable in accordance with the Process and Material Specification PMS 01-04-58 to the oxygen container assy 06B-170.

(h) Attach the angle 06B-130 with the screws 06B-180 and the washers 06B-190 to the aft side wall assembly 06B-010.

(i) Attach the cover oxygen container assy 06B-120 with the screws 06B-140 and the nuts 06B-150 to the angle 06B-130.

(j) Attach the studs 06B-200 and the washers 06B-190 to the cover oxygen container assy 06B-120.

(k) Attach the screws 06B-260 to the aft side wall assembly 06B-010.

(l) Attach the toilet seat cover dispenser 06B-250 to the screws 06B-260.

(m) Install and assemble the handle assembly 06B-110 as follows:

1 Attach the special screws 06B-111 and the special washers 06B-113 to the aft side wall assembly 06B-010.

2 Attach the handle assembly 06B-110 to the aft side wall assembly 06B-010.

3 Attach the security pins 06B-112 to the handle assembly 06B-110.

SUB TASK 25-41-51-410-030-G01
D2549020604000

7. Installation of the Side Wall (06B-1)

(a) Attach the brackets 06B-013, 06B-017 to the aft side wall assembly 06B-010.

(b) Attach the fittings 06B-020 with the screws 06B-030 to the brackets 06B-013.

(c) Assemble the post assembly 06B-210 as follows:

1 Attach the screws 06B-213.

(d) Attach the post assembly 06B-210 with the screws 06B-220, 06B-240, the washers 06B-190 and the caps 06B-230.

(e) Attach the angles 06B-160 with the screws 06B-180 and the washers 06B-190 to the aft side wall assembly 06B-010.

(f) Attach the oxygen container assy 06B-170 with the screws 06B-180 and the washers 06B-190 to the angles 06B-160.

(g) Attach the ground cable in accordance with the Process and Material Specification PMS 01-04-58 to the oxygen container assy 06B-170.

(h) Attach the angle 06B-130 with the screws 06B-180 and the washers 06B-190 to the aft side wall assembly 06B-010.

(i) Attach the cover oxygen container assy 06B-120 with the screws 06B-140 and the nuts 06B-150 to the angle 06B-130.

(j) Attach the studs 06B-200 and the washers 06B-190 to the cover oxygen container assy 06B-120.

(k) Attach the screws 06B-260 to the aft side wall assembly 06B-010.

(l) Attach the toilet seat cover dispenser 06B-250 to the screws 06B-260.

(m) Install and assemble the handle assembly 06B-110 as follows:

1 Attach the special screws 06B-111 and the special washers 06B-113 to the aft side wall assembly 06B-010.

2 Attach the handle assembly 06B-110 to the aft side wall assembly 06B-010.

3 Attach the security pins 06B-112 to the handle assembly 06B-110.

SUB TASK 25-41-51-410-030-H01
D2549010510200 R225401107-004

8. Installation of the Side Wall (06B-1)

(a) Attach the brackets 06B-013, 06B-017 to the aft side wall assembly 06B-010.

(b) Attach the fittings 06B-020 with the screws 06B-030 to the brackets 06B-013.

(c) Assemble the post assembly 06B-210 as follows:

1 Attach the screws 06B-213.

(d) Attach the post assembly 06B-210 with the screws 06B-220, 06B-240, the washers 06B-190 and the caps 06B-230.

(e) Attach the angles 06B-160 with the screws 06B-180 and the washers 06B-190 to the aft side wall assembly 06B-010.

(f) Attach the oxygen container assy 06B-170 with the screws 06B-180, 06B-185 and the washers 06B-190, 06B-195 to the angles 06B-160.

(g) Attach the ground cable in accordance with the Process and Material Specification PMS 01-04-58 to the oxygen container assy 06B-170.

(h) Attach the angle 06B-130 with the screws 06B-180 and the washers 06B-190 to the aft side wall assembly 06B-010.

(i) Attach the angle 06B-130 with the screws 06B-140 and the nuts 06B-150 to the lavatory structure.

(j) Install and assemble the handle assembly 06B-110 as follows:

1 Attach the special screws 06B-111 and the special washers 06B-113 to the aft side wall assembly 06B-010.

2 Attach the handle assembly 06B-110 to the aft side wall assembly 06B-010.

3 Attach the security pins 06B-112 to the handle assembly 06B-110.

SUB TASK 25-41-51-410-030-J01
D2549020502400 D2549020502600 D2549020503600 D2549020504600

9. Installation of the Side Wall (06B-1)

(a) Attach the brackets 06B-013, 06B-017 to the aft side wall assembly 06B-010.

(b) Attach the fittings 06B-020 with the screws 06B-030 to the brackets 06B-013.

(c) Assemble the post assembly 06B-210 as follows:

1 Attach the screws 06B-213.

(d) Attach the post assembly 06B-210 with the screws 06B-220, 06B-240, the washers 06B-190 and the caps 06B-230.

(e) Attach the angles 06B-160 with the screws 06B-180 and the washers 06B-190 to the aft side wall assembly 06B-010.

(f) Attach the oxygen container assy 06B-170 with the screws 06B-180 and the washers 06B-190 to the angles 06B-160.

(g) Attach the ground cable in accordance with the Process and Material Specification PMS 01-04-58 to the oxygen container assy 06B-170.

(h) Attach the angle 06B-130 with the screws 06B-180 and the washers 06B-190 to the aft side wall assembly 06B-010.

(i) Attach the cover oxygen container assy 06B-120 with the screws 06B-140 and the nuts 06B-150 to the angle 06B-130.

(j) Attach the studs 06B-200 and the washers 06B-190 to the cover oxygen container assy 06B-120.

(k) Install and assemble the handle assembly 06B-110 as follows:

1 Attach the special screws 06B-111 and the special washers 06B-113 to the aft side wall assembly 06B-010.

2 Attach the handle assembly 06B-110 to the aft side wall assembly 06B-010.

3 Attach the security pins 06B-112 to the handle assembly 06B-110.

SUB TASK 25-41-51-410-030-K01
D2549010507200

10. Installation of the Side Wall (06B-1)

(a) Attach the brackets 06B-013, 06B-017 to the aft side wall assembly 06B-010.

(b) Attach the fittings 06B-020 with the screws 06B-030 to the brackets 06B-013.

(c) Assemble the post assembly 06B-210 as follows:

1 Attach the screws 06B-213.

(d) Attach the post assembly 06B-210 with the screws 06B-220, 06B-240, the washers 06B-190 and the caps 06B-230.

(e) Attach the angles 06B-160 with the screws 06B-180 and the washers 06B-190 to the aft side wall assembly 06B-010.

(f) Attach the oxygen container assy 06B-170 with the screws 06B-180 and the washers 06B-190 to the angles 06B-160.

(g) Attach the ground cable in accordance with the Process and Material Specification PMS 01-04-58 to the oxygen container assy 06B-170.

(h) Attach the angle 06B-130 with the screws 06B-180 and the washers 06B-190 to the aft side wall assembly 06B-010.

(i) Attach the cover oxygen container assy 06B-120 with the screws 06B-140 and the nuts 06B-150 to the angle 06B-130.

(j) Attach the studs 06B-200 and the washers 06B-190 to the cover oxygen container assy 06B-120.

(k) Install and assemble the handle assembly 06B-110 as follows:

1 Attach the special screws 06B-111 and the special washers 06B-113 to the aft side wall assembly 06B-010.

2 Attach the handle assembly 06B-110 to the aft side wall assembly 06B-010.

3 Attach the security pins 06B-112 to the handle assembly 06B-110.

SUB TASK 25-41-51-410-030-L01
D2549010502600 D2549010503800 D2549010506000 D2549010507600
D2549030500600 D2549030501400 D2549030503000

11. Installation of the Side Wall (06B-1)

(a) Attach the brackets 06B-013, 06B-017 to the aft side wall assembly 06B-010.

(b) Attach the fittings 06B-020 with the screws 06B-030 to the brackets 06B-013.

(c) Assemble the post assembly 06B-210 as follows:

1 Attach the screws 06B-213.

(d) Attach the post assembly 06B-210 with the screws 06B-220, 06B-240, the washers 06B-190 and the caps 06B-230.

(e) Attach the angles 06B-160 with the screws 06B-180 and the washers 06B-190 to the aft side wall assembly 06B-010.

(f) Attach the oxygen container assy 06B-170 with the screws 06B-180 and the washers 06B-190 to the angles 06B-160.

(g) Attach the ground cable in accordance with the Process and Material Specification PMS 01-04-58 to the oxygen container assy 06B-170.

(h) Attach the angle 06B-130 with the screws 06B-180 and the washers 06B-190 to the aft side wall assembly 06B-010.

(i) Attach the cover oxygen container assy 06B-120 with the screws 06B-140 and the nuts 06B-150 to the angle 06B-130.

(j) Attach the studs 06B-200 and the washers 06B-190 to the cover oxygen container assy 06B-120.

(k) Install and assemble the handle assembly 06B-110 as follows:

1 Attach the special screws 06B-111 and the special washers 06B-113 to the aft side wall assembly 06B-010.

2 Attach the handle assembly 06B-110 to the aft side wall assembly 06B-010.

3 Attach the security pins 06B-112 to the handle assembly 06B-110.

TASK 25-41-51-400-819-D01
D2549010505200 D2549010505600 D2549010507800 D2549010508800 D2549020504000 D2549020504200 D2549020600400 D2549020600800 D2549020603000 D2549030501000 D2549030501800 D2549030502400 D2549030502600 D2549030505400 R225401128-000 R225401188-006

187. Installation of the Side Wall

A. General

This task gives you the installation and assembly procedures of the component.

B. Job Set-up Information
(1) Consumable Materials

REFERENCE	**DESIGNATION**
08-007	Sealant, High Temperature

Table 7021
Consumable Materials

C. Procedure

WARNING: **BE CAREFUL WHEN YOU USE SOLVENTS/CLEANING AGENTS, SEALANTS AND OTHER MATERIALS. OBEY THE MATERIAL MANUFACTURER'S INSTRUCTIONS AND THE LOCAL REGULATIONS. MAKE SURE THAT THERE IS A GOOD FLOW OF AIR THROUGH THE WORK AREA. DO NOT BREATHE THE FUMES. DO NOT SMOKE. DO NOT USE THESE MATERIALS NEAR A FLAME, SPARKS OR SOURCES OF HEAT. USE PROTECTIVE CLOTHING, GOGGLES AND GLOVES. IF YOU GET ONE OF THESE MATERIALS ON YOUR SKIN OR IN YOUR EYES, FLUSH IT AWAY WITH A FLOW OF CLEAN WATER. IF YOU GET ONE OF THESE MATERIALS IN YOUR MOUTH, GET IMMEDIATE MEDICAL AID. IN GENERAL, THESE MATERIALS ARE POISONOUS, FLAMMABLE AND SKIN IRRITANTS.**

WARNING: **KEEP ALL HYDROCARBONS (FUELS, LUBRICANTS, ETC.) AWAY FROM ALL SOURCES OF OXYGEN. OXYGEN BECOMES EXPLOSIVE WHEN IT TOUCHES HYDROCARBONS.**

WARNING: **TO PREVENT CONTAMINATION OF THE OXYGEN SYSTEM, MAKE SURE THAT YOUR HANDS AND ALL THE TOOLS ARE CLEAN.**

CAUTION: **DO ALL THE WORK ON A CLEAN, SOFT SURFACE TO PREVENT DAMAGE TO THE COMPONENTS.**

CAUTION: **MAKE SURE THAT ALL THE PARTS ARE CLEAN BEFORE YOU ASSEMBLE THEM.**

SUB TASK 25-41-51-410-031-A01
D2549020603000

1. Installation of the Side Wall (06C-1)

   (a) Attach the brackets 06C-013, 06C-017 to the aft side wall assembly 06C-010.

   (b) Attach the fittings 06C-020 with the screws 06C-030 to the brackets 06C-013.

   (c) Assemble the post assembly 06C-240 as follows:

      1 Attach the screws 06C-243.

   (d) Attach the post assembly 06C-240 with the screws 06C-250, 06C-270, the washers 06C-220 and the caps 06C-260.

   (e) Assemble the single door emergency unlocking device assembly 06C-340 as follows:

      WARNING: **BE CAREFUL WHEN YOU USE MATERIAL NO. 08-007 SEALANT, HIGH TEMPERATURE. OBEY THE MATERIAL MANUFACTURER'S INSTRUCTIONS.**

      1 Apply the Material No. 08-007 Sealant, High Temperature to the snap catch 06C-390 and to the pin 06C-380 and attach the emergency unlocking-device pivot 06C-370, the snap catch 06C-390 and the pin 06C-380 to the emergency unlocking-device housing 06C-350.

      NOTE: **Adjust the snap catch 06C-390 a half turn before stop.**

      WARNING: **BE CAREFUL WHEN YOU USE MATERIAL NO. 08-007 SEALANT, HIGH TEMPERATURE. OBEY THE MATERIAL MANUFACTURER'S INSTRUCTIONS.**

      2 Apply the Material No. 08-007 Sealant, High Temperature to the bolt 06C-400 and attach the emergency unlocking-device strike 06C-360 with the bolt 06C-400 to the emergency unlocking-device housing 06C-350.

   (f) Attach the single door emergency unlocking device assembly 06C-340 and the plates 06C-410 with the screws 06C-420 and the nuts 06C-430 to the post assembly 06C-240.

(g) Attach the angles 06C-190 with the screws 06C-210 and the washers 06C-220 to the aft side wall assembly 06C-010.

(h) Attach the oxygen container assy 06C-200 with the screws 06C-210 and the washers 06C-220 to the angles 06C-190.

(i) Attach the ground cable in accordance with the Process and Material Specification PMS 01-04-58 to the oxygen container assy 06C-200.

(j) Attach the angle 06C-160 with the screws 06C-210 and the washers 06C-220 to the aft side wall assembly 06C-010.

(k) Attach the cover oxygen container assy 06C-150 with the screws 06C-170 and the nuts 06C-180 to the angle 06C-160.

(l) Attach the studs 06C-230 and the washers 06C-220 to the cover oxygen container assy 06C-150.

(m) Attach the support 06C-300 with the screws 06C-310 and the washers 06C-320 to the aft side wall assembly 06C-010.

(n) Install and assemble the handle assembly 06C-110 as follows:

1 Attach the special screws 06C-120 and the special washers 06C-140 to the aft side wall assembly 06C-010.

2 Attach the handle assembly 06C-110 to the aft side wall assembly 06C-010.

3 Attach the security pins 06C-130 to the handle assembly 06C-110.

SUB TASK 25-41-51-410-031-B01
D2549020600400 R225401128-000

2. Installation of the Side Wall (06C-1)

(a) Attach the brackets 06C-013, 06C-017 to the aft side wall assembly 06C-010.

(b) Attach the fittings 06C-020 with the screws 06C-030 to the brackets 06C-013.

(c) Assemble the post assembly 06C-240 as follows:

1 Attach the screws 06C-243.

(d) Attach the post assembly 06C-240 with the screws 06C-250, 06C-270, the washers 06C-220 and the caps 06C-260.

(e) Attach the angles 06C-190 with the screws 06C-210 and the washers 06C-220 to the aft side wall assembly 06C-010.

(f) Attach the oxygen container assy 06C-200 with the screws 06C-210, 06C-212 and the washers 06C-220 to the angles 06C-190.

(g) Attach the ground cable in accordance with the Process and Material Specification PMS 01-04-58 to the oxygen container assy 06C-200.

(h) Attach the angle 06C-160 with the screws 06C-210 and the washers 06C-220 to the aft side wall assembly 06C-010.

(i) Attach the cover oxygen container assy 06C-150 with the screws 06C-170 and the nuts 06C-180 to the angle 06C-160.

(j) Attach the studs 06C-230 and the washers 06C-220 to the cover oxygen container assy 06C-150.

(k) Attach the screws 06C-290 to the aft side wall assembly 06C-010.

(l) Attach the toilet seat cover dispenser 06C-280 to the screws 06C-290.

(m) Attach the support 06C-300 with the screws 06C-310 and the washers 06C-320 to the aft side wall assembly 06C-010.

(n) Install and assemble the handle assembly 06C-110 as follows:

1 Attach the special screws 06C-120 and the special washers 06C-140 to the aft side wall assembly 06C-010.

2 Attach the handle assembly 06C-110 to the aft side wall assembly 06C-010.

3 Attach the security pins 06C-130 to the handle assembly 06C-110.

SUB TASK 25-41-51-410-031-C01
D2549020504000 D2549030501800

3. Installation of the Side Wall (06C-1)

(a) Attach the brackets 06C-013, 06C-017 to the aft side wall assembly 06C-010.

(b) Attach the fittings 06C-020 with the screws 06C-030 to the brackets 06C-013.

(c) Assemble the post assembly 06C-240 as follows:

1 Attach the screws 06C-243.

(d) Attach the post assembly 06C-240 with the screws 06C-250, 06C-270, the washers 06C-220 and the caps 06C-260.

(e) Attach the angles 06C-190 with the screws 06C-210 and the washers 06C-220 to the aft side wall assembly 06C-010.

(f) Attach the oxygen container assy 06C-200 with the screws 06C-210 and the washers 06C-220 to the angles 06C-190.

(g) Attach the ground cable in accordance with the Process and Material Specification PMS 01-04-58 to the oxygen container assy 06C-200.

(h) Attach the angle 06C-160 with the screws 06C-210 and the washers 06C-220 to the aft side wall assembly 06C-010.

(i) Attach the cover oxygen container assy 06C-150 with the screws 06C-170 and the nuts 06C-180 to the angle 06C-160.

(j) Attach the studs 06C-230 and the washers 06C-220 to the cover oxygen container assy 06C-150.

(k) Attach the screws 06C-290 to the aft side wall assembly 06C-010.

(l) Attach the toilet seat cover dispenser 06C-280 to the screws 06C-290.

(m) Install and assemble the handle assembly 06C-110 as follows:

1 Attach the special screws 06C-120 and the special washers 06C-140 to the aft side wall assembly 06C-010.

2 Attach the handle assembly 06C-110 to the aft side wall assembly 06C-010.

3 Attach the security pins 06C-130 to the handle assembly 06C-110.

SUB TASK 25-41-51-410-031-D01
D2549010505200 D2549010505600 D2549010507800 D2549020504200

4. Installation of the Side Wall (06C-1)

(a) Attach the brackets 06C-013, 06C-017 to the aft side wall assembly 06C-010.

(b) Attach the fittings 06C-020 with the screws 06C-030 to the brackets 06C-013.

(c) Assemble the post assembly 06C-240 as follows:

1 Attach the screws 06C-243.

(d) Attach the post assembly 06C-240 with the screws 06C-250, 06C-270, the washers 06C-220 and the caps 06C-260.

(e) Attach the angles 06C-190 with the screws 06C-210 and the washers 06C-220 to the aft side wall assembly 06C-010.

(f) Attach the oxygen container assy 06C-200 with the screws 06C-210 and the washers 06C-220 to the angles 06C-190.

(g) Attach the ground cable in accordance with the Process and Material Specification PMS 01-04-58 to the oxygen container assy 06C-200.

(h) Attach the angle 06C-160 with the screws 06C-210 and the washers 06C-220 to the aft side wall assembly 06C-010.

(i) Attach the cover oxygen container assy 06C-150 with the screws 06C-170 and the nuts 06C-180 to the angle 06C-160.

(j) Attach the studs 06C-230 and the washers 06C-220 to the cover oxygen container assy 06C-150.

(k) Attach the screws 06C-290 to the aft side wall assembly 06C-010.

(l) Attach the toilet seat cover dispenser 06C-280 to the screws 06C-290.

(m) Install and assemble the handle assembly 06C-110 as follows:

1 Attach the special screws 06C-120 and the special washers 06C-140 to the aft side wall assembly 06C-010.

2 Attach the handle assembly 06C-110 to the aft side wall assembly 06C-010.

3 Attach the security pins 06C-130 to the handle assembly 06C-110.

SUB TASK 25-41-51-410-031-E01
D2549020600800

5. Installation of the Side Wall (06C-1)

(a) Attach the brackets 06C-013, 06C-017 to the aft side wall assembly 06C-010.

(b) Attach the fittings 06C-020 with the screws 06C-030 to the brackets 06C-013.

(c) Assemble the post assembly 06C-240 as follows:

1 Attach the screws 06C-243.

(d) Attach the post assembly 06C-240 with the screws 06C-250, 06C-270, the washers 06C-220 and the caps 06C-260.

(e) Attach the angles 06C-190 with the screws 06C-210 and the washers 06C-220 to the aft side wall assembly 06C-010.

(f) Attach the oxygen container assy 06C-200 with the screws 06C-210 and the washers 06C-220 to the angles 06C-190.

(g) Attach the ground cable in accordance with the Process and Material Specification PMS 01-04-58 to the oxygen container assy 06C-200.

(h) Attach the angle 06C-160 with the screws 06C-210 and the washers 06C-220 to the aft side wall assembly 06C-010.

(i) Attach the cover oxygen container assy 06C-150 with the screws 06C-170 and the nuts 06C-180 to the angle 06C-160.

(j) Attach the studs 06C-230 and the washers 06C-220 to the cover oxygen container assy 06C-150.

(k) Attach the screws 06C-290 to the aft side wall assembly 06C-010.

(l) Attach the toilet seat cover dispenser 06C-280 to the screws 06C-290.

(m) Install and assemble the handle assembly 06C-110 as follows:

1 Attach the special screws 06C-120 and the special washers 06C-140 to the aft side wall assembly 06C-010.

2 Attach the handle assembly 06C-110 to the aft side wall assembly 06C-010.

3 Attach the security pins 06C-130 to the handle assembly 06C-110.

SUB TASK 25-41-51-410-031-F01
D2549010508800 D2549030502400 D2549030502600 D2549030505400 R225401188-006

6. Installation of the Side Wall (06C-1)

(a) Attach the brackets 06C-013, 06C-017 to the aft side wall assembly 06C-010.

(b) Attach the fittings 06C-020 with the screws 06C-030 to the brackets 06C-013.

(c) Assemble the post assembly 06C-240 as follows:

1 Attach the screws 06C-243.

(d) Attach the post assembly 06C-240 with the screws 06C-250, 06C-270, the washers 06C-220 and the caps 06C-260.

(e) Attach the angles 06C-190 with the screws 06C-210 and the washers 06C-220 to the aft side wall assembly 06C-010.

(f) Attach the oxygen container assy 06C-200 with the screws 06C-210 and the washers 06C-220 to the angles 06C-190.

(g) Attach the ground cable in accordance with the Process and Material Specification PMS 01-04-58 to the oxygen container assy 06C-200.

(h) Attach the angle 06C-160 with the screws 06C-210 and the washers 06C-220 to the aft side wall assembly 06C-010.

(i) Attach the cover oxygen container assy 06C-150 with the screws 06C-170 and the nuts 06C-180 to the angle 06C-160.

(j) Attach the studs 06C-230 and the washers 06C-220 to the cover oxygen container assy 06C-150.

(k) Attach the screws 06C-290 to the aft side wall assembly 06C-010.

(l) Attach the toilet seat cover dispenser 06C-280 to the screws 06C-290.

(m) Install and assemble the handle assembly 06C-110 as follows:

1 Attach the special screws 06C-120 and the special washers 06C-140 to the aft side wall assembly 06C-010.

2 Attach the handle assembly 06C-110 to the aft side wall assembly 06C-010.

3 Attach the security pins 06C-130 to the handle assembly 06C-110.

SUB TASK 25-41-51-410-031-G01
D2549030501000

7. Installation of the Side Wall (06C-1)

(a) Attach the brackets 06C-013, 06C-017 to the aft side wall assembly 06C-010.

(b) Attach the fittings 06C-020 with the screws 06C-030 to the brackets 06C-013.

(c) Assemble the post assembly 06C-240 as follows:

1 Attach the screws 06C-243.

(d) Attach the post assembly 06C-240 with the screws 06C-250, 06C-270, the washers 06C-220 and the caps 06C-260.

(e) Attach the angles 06C-190 with the screws 06C-210 and the washers 06C-220 to the aft side wall assembly 06C-010.

(f) Attach the oxygen container assy 06C-200 with the screws 06C-210 and the washers 06C-220 to the angles 06C-190.

(g) Attach the ground cable in accordance with the Process and Material Specification PMS 01-04-58 to the oxygen container assy 06C-200.

(h) Attach the angle 06C-160 with the screws 06C-210 and the washers 06C-220 to the aft side wall assembly 06C-010.

(i) Attach the cover oxygen container assy 06C-150 with the screws 06C-170 and the nuts 06C-180 to the angle 06C-160.

(j) Attach the studs 06C-230 and the washers 06C-220 to the cover oxygen container assy 06C-150.

(k) Install and assemble the handle assembly 06C-110 as follows:

1 Attach the special screws 06C-120 and the special washers 06C-140 to the aft side wall assembly 06C-010.

2 Attach the handle assembly 06C-110 to the aft side wall assembly 06C-010.

3 Attach the security pins 06C-130 to the handle assembly 06C-110.

TASK 25-41-51-400-819-E01
D2549010507000 D2549010508200 D2549020505200 D2549020506000 D2549020601000 D2549020602000 D2549020602400 D2549020602600 D2549020603400 D2549030503400 D2549030504800 R225401139-000 R225401145-000

188. Installation of the Side Wall

A. General

This task gives you the installation and assembly procedures of the component.

B. Job Set-up Information

(1) Not applicable

C. Procedure

WARNING: BE CAREFUL WHEN YOU USE SOLVENTS/CLEANING AGENTS, SEALANTS AND OTHER MATERIALS. OBEY THE MATERIAL MANUFACTURER'S INSTRUCTIONS AND THE LOCAL REGULATIONS. MAKE SURE THAT THERE IS A GOOD FLOW OF AIR THROUGH THE WORK AREA. DO NOT BREATHE THE FUMES. DO NOT SMOKE. DO NOT USE THESE MATERIALS NEAR A FLAME, SPARKS OR SOURCES OF HEAT. USE PROTECTIVE CLOTHING, GOGGLES AND GLOVES. IF YOU GET ONE OF THESE MATERIALS ON YOUR SKIN OR IN YOUR EYES, FLUSH IT AWAY WITH A FLOW OF CLEAN WATER. IF YOU GET ONE OF THESE MATERIALS IN YOUR MOUTH, GET IMMEDIATE MEDICAL AID. IN GENERAL, THESE MATERIALS ARE POISONOUS, FLAMMABLE AND SKIN IRRITANTS.

WARNING: KEEP ALL HYDROCARBONS (FUELS, LUBRICANTS, ETC.) AWAY FROM ALL SOURCES OF OXYGEN. OXYGEN BECOMES EXPLOSIVE WHEN IT TOUCHES HYDROCARBONS.

WARNING: TO PREVENT CONTAMINATION OF THE OXYGEN SYSTEM, MAKE SURE THAT YOUR HANDS AND ALL THE TOOLS ARE CLEAN.

CAUTION: DO ALL THE WORK ON A CLEAN, SOFT SURFACE TO PREVENT DAMAGE TO THE COMPONENTS.

CAUTION: MAKE SURE THAT ALL THE PARTS ARE CLEAN BEFORE YOU ASSEMBLE THEM.

SUB TASK 25-41-51-410-032-A01
D2549010507000 D2549020602000

1. Installation of the Side Wall (06D-1)

(a) Attach the brackets 06D-013, 06D-017 to the aft side wall assembly 06D-010.

(b) Attach the fittings 06D-020 with the screws 06D-030 to the brackets 06D-013.

(c) Assemble the post assembly 06D-240 as follows:

1 Attach the screws 06D-243.

(d) Attach the post assembly 06D-240 with the screws 06D-250, 06D-270, the washers 06D-220 and the caps 06D-260.

(e) Attach the angles 06D-190 with the screws 06D-210 and the washers 06D-220 to the aft side wall assembly 06D-010.

(f) Attach the oxygen container assy 06D-200 with the screws 06D-210 and the washers 06D-220 to the angles 06D-190.

(g) Attach the ground cable in accordance with the Process and Material Specification PMS 01-04-58 to the oxygen container assy 06D-200.

(h) Attach the angle 06D-160 with the screws 06D-210 and the washers 06D-220 to the aft side wall assembly 06D-010.

(i) Attach the cover oxygen container assy 06D-150 with the screws 06D-170 and the nuts 06D-180 to the angle 06D-160.

(j) Attach the studs 06D-230 and the washers 06D-220 to the cover oxygen container assy 06D-150.

(k) Install and assemble the handle assembly 06D-310 as follows:

1 Attach the special screws 06D-320 and the special washers 06D-340 to the aft side wall assembly 06D-010.

2 Attach the handle assembly 06D-310 to the aft side wall assembly 06D-010.

3 Attach the security pins 06D-330 to the handle assembly 06D-310.

(l) Install and assemble the handle assembly 06D-110 as follows:

1 Attach the special screws 06D-120 and the special washers 06D-140 to the aft side wall assembly 06D-010.

2 Attach the handle assembly 06D-110 to the aft side wall assembly 06D-010.

3 Attach the security pins 06D-130 to the handle assembly 06D-110.

SUB TASK 25-41-51-410-032-B01
D2549020602600 D2549030503400 D2549030504800

2. Installation of the Side Wall (06D-1)

(a) Attach the brackets 06D-013, 06D-017 to the aft side wall assembly 06D-010.

(b) Attach the fittings 06D-020 with the screws 06D-030 to the brackets 06D-013.

(c) Assemble the post assembly 06D-240 as follows:

1 Attach the screws 06D-243.

(d) Attach the post assembly 06D-240 with the screws 06D-250, 06D-270, the washers 06D-220 and the caps 06D-260.

(e) Attach the angles 06D-190 with the screws 06D-210 and the washers 06D-220 to the aft side wall assembly 06D-010.

(f) Attach the oxygen container assy 06D-200 with the screws 06D-210 and the washers 06D-220 to the angles 06D-190.

(g) Attach the ground cable in accordance with the Process and Material Specification PMS 01-04-58 to the oxygen container assy 06D-200.

(h) Attach the angle 06D-160 with the screws 06D-210 and the washers 06D-220 to the aft side wall assembly 06D-010.

(i) Attach the cover oxygen container assy 06D-150 with the screws 06D-170 and the nuts 06D-180 to the angle 06D-160.

(j) Attach the studs 06D-230 and the washers 06D-220 to the cover oxygen container assy 06D-150.

(k) Attach the screws 06D-290 to the aft side wall assembly 06D-010.

(l) Attach the toilet seat cover dispenser 06D-280 to the screws 06D-290.

(m) Install and assemble the handle assembly 06D-110 as follows:

1 Attach the special screws 06D-120 and the special washers 06D-140 to the aft side wall assembly 06D-010.

2 Attach the handle assembly 06D-110 to the aft side wall assembly 06D-010.

3 Attach the security pins 06D-130 to the handle assembly 06D-110.

SUB TASK 25-41-51-410-032-C01
D2549020601000

3. Installation of the Side Wall (06D-1)

(a) Attach the brackets 06D-013, 06D-017 to the aft side wall assembly 06D-010.

(b) Attach the fittings 06D-020 with the screws 06D-030 to the brackets 06D-013.

(c) Assemble the post assembly 06D-240 as follows:

1 Attach the screws 06D-243.

(d) Attach the post assembly 06D-240 with the screws 06D-250, 06D-270, the washers 06D-220 and the caps 06D-260.

(e) Attach the angles 06D-190 with the screws 06D-210 and the washers 06D-220 to the aft side wall assembly 06D-010.

(f) Attach the oxygen container assy 06D-200 with the screws 06D-210 and the washers 06D-220 to the angles 06D-190.

(g) Attach the ground cable in accordance with the Process and Material Specification PMS 01-04-58 to the oxygen container assy 06D-200.

(h) Attach the angle 06D-160 with the screws 06D-210 and the washers 06D-220 to the aft side wall assembly 06D-010.

(i) Attach the cover oxygen container assy 06D-150 with the screws 06D-170 and the nuts 06D-180 to the angle 06D-160.

(j) Attach the studs 06D-230 and the washers 06D-220 to the cover oxygen container assy 06D-150.

(k) Attach the screws 06D-290 to the aft side wall assembly 06D-010.

(l) Attach the toilet seat cover dispenser 06D-280 to the screws 06D-290.

(m) Install and assemble the handle assembly 06D-110 as follows:

1 Attach the special screws 06D-120 and the special washers 06D-140 to the aft side wall assembly 06D-010.

2 Attach the handle assembly 06D-110 to the aft side wall assembly 06D-010.

3 Attach the security pins 06D-130 to the handle assembly 06D-110.

SUB TASK 25-41-51-410-032-D01
D2549010508200 R225401145-000

4. Installation of the Side Wall (06D-1)

(a) Attach the brackets 06D-013, 06D-017 to the aft side wall assembly 06D-010.

(b) Attach the fittings 06D-020 with the screws 06D-030 to the brackets 06D-013.

(c) Assemble the post assembly 06D-240 as follows:

1 Attach the screws 06D-243.

(d) Attach the post assembly 06D-240 with the screws 06D-250, 06D-270, the washers 06D-220 and the caps 06D-260.

(e) Attach the angles 06D-190 with the screws 06D-210 and the washers 06D-220 to the aft side wall assembly 06D-010.

(f) Attach the oxygen container assy 06D-200 with the screws 06D-210, 06D-212 and the washers 06D-220 to the angles 06D-190.

(g) Attach the ground cable in accordance with the Process and Material Specification PMS 01-04-58 to the oxygen container assy 06D-200.

(h) Attach the angle 06D-160 with the screws 06D-210 and the washers 06D-220 to the aft side wall assembly 06D-010.

(i) Attach the cover oxygen container assy 06D-150 with the screws 06D-170 and the nuts 06D-180 to the angle 06D-160.

(j) Attach the studs 06D-230 and the washers 06D-220 to the cover oxygen container assy 06D-150.

(k) Attach the screws 06D-290 to the aft side wall assembly 06D-010.

(l) Attach the toilet seat cover dispenser 06D-280 to the screws 06D-290.

(m) Install and assemble the handle assembly 06D-110 as follows:

1 Attach the special screws 06D-120 and the special washers 06D-140 to the aft side wall assembly 06D-010.

2 Attach the handle assembly 06D-110 to the aft side wall assembly 06D-010.

3 Attach the security pins 06D-130 to the handle assembly 06D-110.

SUB TASK 25-41-51-410-032-E01
D2549020506000

5. Installation of the Side Wall (06D-1)

(a) Attach the brackets 06D-013, 06D-017 to the aft side wall assembly 06D-010.

(b) Attach the fittings 06D-020 with the screws 06D-030 to the brackets 06D-013.

(c) Assemble the post assembly 06D-240 as follows:

1 Attach the screws 06D-243.

(d) Attach the post assembly 06D-240 with the screws 06D-250, 06D-270, the washers 06D-220 and the caps 06D-260.

(e) Attach the angles 06D-190 with the screws 06D-210 and the washers 06D-220 to the aft side wall assembly 06D-010.

(f) Attach the oxygen container assy 06D-200 with the screws 06D-210 and the washers 06D-220 to the angles 06D-190.

(g) Attach the ground cable in accordance with the Process and Material Specification PMS 01-04-58 to the oxygen container assy 06D-200.

(h) Attach the angle 06D-160 with the screws 06D-210 and the washers 06D-220 to the aft side wall assembly 06D-010.

(i) Attach the cover oxygen container assy 06D-150 with the screws 06D-170 and the nuts 06D-180 to the angle 06D-160.

(j) Attach the studs 06D-230 and the washers 06D-220 to the cover oxygen container assy 06D-150.

(k) Install and assemble the handle assembly 06D-110 as follows:

1 Attach the special screws 06D-120 and the special washers 06D-140 to the aft side wall assembly 06D-010.

2 Attach the handle assembly 06D-110 to the aft side wall assembly 06D-010.

3 Attach the security pins 06D-130 to the handle assembly 06D-110.

SUB TASK 25-41-51-410-032-F01
D2549020602400 D2549020603400 R225401139-000

6. Installation of the Side Wall (06D-1)

(a) Attach the brackets 06D-013, 06D-017 to the aft side wall assembly 06D-010.

(b) Attach the fittings 06D-020 with the screws 06D-030 to the brackets 06D-013.

(c) Assemble the post assembly 06D-240 as follows:

1 Attach the screws 06D-243.

(d) Attach the post assembly 06D-240 with the screws 06D-250, 06D-270, the washers 06D-220 and the caps 06D-260.

(e) Attach the angles 06D-190 with the screws 06D-210 and the washers 06D-220 to the aft side wall assembly 06D-010.

(f) Attach the oxygen container assy 06D-200 with the screws 06D-210, 06D-212 and the washers 06D-220, 06D-225 to the angles 06D-190.

(g) Attach the ground cable in accordance with the Process and Material Specification PMS 01-04-58 to the oxygen container assy 06D-200.

(h) Attach the angle 06D-160 with the screws 06D-210 and the washers 06D-220 to the aft side wall assembly 06D-010.

(i) Attach the cover oxygen container assy 06D-150 with the screws 06D-170 and the nuts 06D-180 to the angle 06D-160.

(j) Attach the studs 06D-230 and the washers 06D-220 to the cover oxygen container assy 06D-150.

(k) Install and assemble the handle assembly 06D-110 as follows:

1 Attach the special screws 06D-120 and the special washers 06D-140 to the aft side wall assembly 06D-010.

2 Attach the handle assembly 06D-110 to the aft side wall assembly 06D-010.

3 Attach the security pins 06D-130 to the handle assembly 06D-110.

SUB TASK 25-41-51-410-032-G01
D2549020505200

7. Installation of the Side Wall (06D-1)

(a) Attach the brackets 06D-013, 06D-017 to the aft side wall assembly 06D-010.

(b) Attach the fittings 06D-020 with the screws 06D-030 to the brackets 06D-013.

(c) Assemble the post assembly 06D-240 as follows:

1 Attach the screws 06D-243.

(d) Attach the post assembly 06D-240 with the screws 06D-250, 06D-270, the washers 06D-220 and the caps 06D-260.

(e) Attach the angles 06D-190 with the screws 06D-210 and the washers 06D-220 to the aft side wall assembly 06D-010.

(f) Attach the oxygen container assy 06D-200 with the screws 06D-210 and the washers 06D-220 to the angles 06D-190.

(g) Attach the ground cable in accordance with the Process and Material Specification PMS 01-04-58 to the oxygen container assy 06D-200.

(h) Attach the angle 06D-160 with the screws 06D-210 and the washers 06D-220 to the aft side wall assembly 06D-010.

(i) Attach the cover oxygen container assy 06D-150 with the screws 06D-170 and the nuts 06D-180 to the angle 06D-160.

(j) Attach the studs 06D-230 and the washers 06D-220 to the cover oxygen container assy 06D-150.

(k) Install and assemble the handle assembly 06D-110 as follows:

1 Attach the special screws 06D-120 and the special washers 06D-140 to the aft side wall assembly 06D-010.

2 Attach the handle assembly 06D-110 to the aft side wall assembly 06D-010.

3 Attach the security pins 06D-130 to the handle assembly 06D-110.

TASK 25-41-51-400-819-F01

D2549010505000 D2549010506800 D2549010508000 D2549010508400 D2549010508600 D2549010509000 D2549010509200 D2549010510800 D2549010511000 D2549010513200 D2549010601000 D2549010604000 D2549020601800 D2549020603600 D2549020603800 D2549020605800 D2549020606600 D2549020607000 D2549030401600 D2549030403000 D2549030407400 D2549030503600 D2549030505200 R225401137-000 R225401159-000 R225401199-000 R225401199-008 R225401199-010

189. Installation of the Side Wall

A. General

This task gives you the installation and assembly procedures of the component.

B. Job Set-up Information

(1) Not applicable

C. Procedure

WARNING: BE CAREFUL WHEN YOU USE SOLVENTS/CLEANING AGENTS, SEALANTS AND OTHER MATERIALS. OBEY THE MATERIAL MANUFACTURER'S INSTRUCTIONS AND THE LOCAL REGULATIONS. MAKE SURE THAT THERE IS A GOOD FLOW OF AIR THROUGH THE WORK AREA. DO NOT BREATHE THE FUMES. DO NOT SMOKE. DO NOT USE THESE MATERIALS NEAR A FLAME, SPARKS OR SOURCES OF HEAT. USE PROTECTIVE CLOTHING, GOGGLES AND GLOVES. IF YOU GET ONE OF THESE MATERIALS ON YOUR SKIN OR IN YOUR EYES, FLUSH IT AWAY WITH A FLOW OF CLEAN WATER. IF YOU GET ONE OF THESE MATERIALS IN YOUR MOUTH, GET IMMEDIATE MEDICAL AID. IN GENERAL, THESE MATERIALS ARE POISONOUS, FLAMMABLE AND SKIN IRRITANTS.

WARNING: KEEP ALL HYDROCARBONS (FUELS, LUBRICANTS, ETC.) AWAY FROM ALL SOURCES OF OXYGEN. OXYGEN BECOMES EXPLOSIVE WHEN IT TOUCHES HYDROCARBONS.

WARNING: TO PREVENT CONTAMINATION OF THE OXYGEN SYSTEM, MAKE SURE THAT YOUR HANDS AND ALL THE TOOLS ARE CLEAN.

CAUTION: DO ALL THE WORK ON A CLEAN, SOFT SURFACE TO PREVENT DAMAGE TO THE COMPONENTS.

CAUTION: MAKE SURE THAT ALL THE PARTS ARE CLEAN BEFORE YOU ASSEMBLE THEM.

SUB TASK 25-41-51-410-033-A01
D2549010506800 D2549010509000 D2549010513200 D2549010601000 D2549010604000

1. Installation of the Side Wall (06E-1)

   (a) Attach the brackets 06E-013, 06E-017 to the aft side wall assembly 06E-010.

   (b) Attach the fittings 06E-020, 06E-025 with the screws 06E-030, 06E-035 to the brackets 06E-013.

   (c) Assemble the post assembly 06E-240 as follows:

      1 Attach the screws 06E-243.

   (d) Attach the post assembly 06E-240 with the screws 06E-250, 06E-270, the washers 06E-220 and the caps 06E-260.

   (e) Attach the angles 06E-190 with the screws 06E-210 and the washers 06E-220 to the aft side wall assembly 06E-010.

   (f) Attach the oxygen container assy 06E-200 with the screws 06E-210 and the washers 06E-220 to the angles 06E-190.

   (g) Attach the ground cable in accordance with the Process and Material Specification PMS 01-04-58 to the oxygen container assy 06E-200.

   (h) Attach the angle 06E-160 with the screws 06E-210 and the washers 06E-220 to the aft side wall assembly 06E-010.

   (i) Attach the cover oxygen container assy 06E-150 with the screws 06E-170 and the nuts 06E-180 to the angle 06E-160.

   (j) Attach the studs 06E-230 and the washers 06E-220 to the cover oxygen container assy 06E-150.

   (k) Attach the support 06E-300 with the screws 06E-251 and the washers 06E-221 to the aft side wall assembly 06E-010.

   (l) Install and assemble the handle assembly 06E-110 as follows:

      1 Attach the special screws 06E-120 and the special washers 06E-140 to the aft side wall assembly 06E-010.

      2 Attach the handle assembly 06E-110 to the aft side wall assembly 06E-010.

3 Attach the security pins 06E-130 to the handle assembly 06E-110.

SUB TASK 25-41-51-410-033-B01
D2549010508400

2. Installation of the Side Wall (06E-1)

(a) Attach the brackets 06E-013, 06E-017 to the aft side wall assembly 06E-010.

(b) Attach the fittings 06E-020, 06E-025 with the screws 06E-030, 06E-035 to the aft side wall assembly 06E-010.

(c) Assemble the post assembly 06E-240 as follows:

1 Attach the screws 06E-243.

(d) Attach the post assembly 06E-240 with the screws 06E-250, 06E-270, the washers 06E-220 and the caps 06E-260.

(e) Attach the angle 06E-420 with the screws 06E-440, 06E-460 and the washers 06E-430 to the aft side wall assembly 06E-010.

(f) Attach the angles 06E-190 with the screws 06E-210 and the washers 06E-220 to the aft side wall assembly 06E-010.

(g) Attach the oxygen container assy 06E-200 with the screws 06E-210 and the washers 06E-220 to the angles 06E-190.

(h) Attach the ground cable in accordance with the Process and Material Specification PMS 01-04-58 to the oxygen container assy 06E-200.

(i) Attach the angle 06E-160 with the screws 06E-210 and the washers 06E-220 to the aft side wall assembly 06E-010.

(j) Attach the cover oxygen container assy 06E-150 with the screws 06E-170 and the nuts 06E-180 to the angle 06E-160.

(k) Attach the studs 06E-230 and the washers 06E-220 to the cover oxygen container assy 06E-150.

(l) Install and assemble the handle assembly 06E-110 as follows:

1 Attach the special screws 06E-120 and the special washers 06E-140 to the aft side wall assembly 06E-010.

2 Attach the handle assembly 06E-110 to the aft side wall assembly 06E-010.

3 Attach the security pins 06E-130 to the handle assembly 06E-110.

SUB TASK 25-41-51-410-033-C01
D2549030401600 D2549030403000 D2549030407400 R225401199-000 R225401199-008 R225401199-010

3. Installation of the Side Wall (06E-1)

(a) Attach the brackets 06E-013, 06E-017 to the aft side wall assembly 06E-010.

(b) Attach the fittings 06E-020, 06E-025 with the screws 06E-030, 06E-035 to the brackets 06E-013.

(c) Assemble the post assembly 06E-240 as follows:

1 Attach the screws 06E-243.

(d) Attach the post assembly 06E-240 with the screws 06E-250, 06E-270, the washers 06E-220 and the caps 06E-260.

(e) Attach the angle 06E-420 with the screws 06E-440, 06E-460 and the washers 06E-430 to the aft side wall assembly 06E-010.

(f) Attach the angles 06E-190 with the screws 06E-210 and the washers 06E-220 to the aft side wall assembly 06E-010.

(g) Attach the oxygen container assy 06E-200 with the screws 06E-210 and the washers 06E-220 to the angles 06E-190.

(h) Attach the ground cable in accordance with the Process and Material Specification PMS 01-04-58 to the oxygen container assy 06E-200.

(i) Attach the angle 06E-160 with the screws 06E-210 and the washers 06E-220 to the aft side wall assembly 06E-010.

(j) Attach the cover oxygen container assy 06E-150 with the screws 06E-170 and the nuts 06E-180 to the angle 06E-160.

(k) Attach the studs 06E-230 and the washers 06E-220 to the cover oxygen container assy 06E-150.

(l) Attach the screws 06E-290 to the aft side wall assembly 06E-010.

(m) Attach the toilet seat cover dispenser 06E-280 to the screws 06E-290.

(n) Install and assemble the handle assembly 06E-110 as follows:

1 Attach the special screws 06E-120 and the special washers 06E-140 to the aft side wall assembly 06E-010.

2 Attach the handle assembly 06E-110 to the aft side wall assembly 06E-010.

3 Attach the security pins 06E-130 to the handle assembly 06E-110.

SUB TASK 25-41-51-410-033-D01
D2549010508000

4. Installation of the Side Wall (06E-1)

(a) Attach the fittings 06E-020, 06E-025 with the screws 06E-030, 06E-035 to the aft side wall assembly 06E-010.

(b) Assemble the post assembly 06E-240 as follows:

1 Attach the screws 06E-243.

(c) Attach the post assembly 06E-240 with the screws 06E-250, 06E-270, the washers 06E-220 and the caps 06E-260.

(d) Attach the angle 06E-420 with the screws 06E-440, 06E-460 and the washers 06E-430 to the aft side wall assembly 06E-010.

(e) Attach the angles 06E-190 with the screws 06E-210 and the washers 06E-220 to the aft side wall assembly 06E-010.

(f) Attach the oxygen container assy 06E-200 with the screws 06E-210 and the washers 06E-220 to the angles 06E-190.

(g) Attach the ground cable in accordance with the Process and Material Specification PMS 01-04-58 to the oxygen container assy 06E-200.

(h) Attach the angle 06E-160 with the screws 06E-210 and the washers 06E-220 to the aft side wall assembly 06E-010.

(i) Attach the cover oxygen container assy 06E-150 with the screws 06E-170 and the nuts 06E-180 to the angle 06E-160.

(j) Attach the studs 06E-230 and the washers 06E-220 to the cover oxygen container assy 06E-150.

(k) Attach the screws 06E-290 to the aft side wall assembly 06E-010.

(l) Attach the toilet seat cover dispenser 06E-280 to the screws 06E-290.

(m) Install and assemble the handle assembly 06E-110 as follows:

1 Attach the special screws 06E-120 and the special washers 06E-140 to the aft side wall assembly 06E-010.

2 Attach the handle assembly 06E-110 to the aft side wall assembly 06E-010.

3 Attach the security pins 06E-130 to the handle assembly 06E-110.

SUB TASK 25-41-51-410-033-E01
D2549020606600 D2549020607000 D2549030505200 R225401137-000 R225401159-000

5. Installation of the Side Wall (06E-1)

(a) Attach the brackets 06E-013, 06E-017 to the aft side wall assembly 06E-010.

(b) Attach the fittings 06E-020, 06E-025 with the screws 06E-030, 06E-035 to the brackets 06E-013.

(c) Assemble the post assembly 06E-240 as follows:

1 Attach the screws 06E-243.

(d) Attach the post assembly 06E-240 with the screws 06E-250, 06E-270, the washers 06E-220 and the caps 06E-260.

(e) Attach the angles 06E-190 with the screws 06E-210 and the washers 06E-220 to the aft side wall assembly 06E-010.

(f) Attach the oxygen container assy 06E-200 with the screws 06E-210, 06E-215 and the washers 06E-220 to the angles 06E-190.

(g) Attach the ground cable in accordance with the Process and Material Specification PMS 01-04-58 to the oxygen container assy 06E-200.

(h) Attach the angle 06E-160 with the screws 06E-210 and the washers 06E-220 to the aft side wall assembly 06E-010.

(i) Attach the cover oxygen container assy 06E-150 with the screws 06E-170 and the nuts 06E-180 to the angle 06E-160.

(j) Attach the studs 06E-230 and the washers 06E-220 to the cover oxygen container assy 06E-150.

(k) Attach the screws 06E-290 to the aft side wall assembly 06E-010.

(l) Attach the toilet seat cover dispenser 06E-280 to the screws 06E-290.

(m) Install and assemble the handle assembly 06E-110 as follows:

1 Attach the special screws 06E-120 and the special washers 06E-140 to the aft side wall assembly 06E-010.

2 Attach the handle assembly 06E-110 to the aft side wall assembly 06E-010.

3 Attach the security pins 06E-130 to the handle assembly 06E-110.

SUB TASK 25-41-51-410-033-F01
D2549020603600

6. Installation of the Side Wall (06E-1)

(a) Attach the brackets 06E-013, 06E-017 to the aft side wall assembly 06E-010.

(b) Attach the fittings 06E-020, 06E-025 with the screws 06E-030, 06E-035 to the brackets 06E-013.

(c) Assemble the post assembly 06E-240 as follows:

1 Attach the screws 06E-243.

(d) Attach the post assembly 06E-240 with the screws 06E-250, 06E-270, the washers 06E-220 and the caps 06E-260.

(e) Attach the angles 06E-190 with the screws 06E-210 and the washers 06E-220 to the aft side wall assembly 06E-010.

(f) Attach the oxygen container assy 06E-200 with the screws 06E-210 and the washers 06E-220 to the angles 06E-190.

(g) Attach the ground cable in accordance with the Process and Material Specification PMS 01-04-58 to the oxygen container assy 06E-200.

(h) Attach the angle 06E-160 with the screws 06E-210 and the washers 06E-220 to the aft side wall assembly 06E-010.

(i) Attach the cover oxygen container assy 06E-150 with the screws 06E-170 and the nuts 06E-180 to the angle 06E-160.

(j) Attach the studs 06E-230 and the washers 06E-220 to the cover oxygen container assy 06E-150.

(k) Attach the screws 06E-290 to the aft side wall assembly 06E-010.

(l) Attach the toilet seat cover dispenser 06E-280 to the screws 06E-290.

(m) Install and assemble the handle assembly 06E-110 as follows:

1 Attach the special screws 06E-120 and the special washers 06E-140 to the aft side wall assembly 06E-010.

2 Attach the handle assembly 06E-110 to the aft side wall assembly 06E-010.

3 Attach the security pins 06E-130 to the handle assembly 06E-110.

SUB TASK 25-41-51-410-033-G01
D2549010505000 D2549010508600 D2549010509200 D2549010510800 D2549010511000 D2549020601800

7. Installation of the Side Wall (06E-1)

(a) Attach the brackets 06E-013, 06E-017 to the aft side wall assembly 06E-010.

(b) Attach the fittings 06E-020, 06E-025 with the screws 06E-030, 06E-035 to the brackets 06E-013.

(c) Assemble the post assembly 06E-240 as follows:

1 Attach the screws 06E-243.

(d) Attach the post assembly 06E-240 with the screws 06E-250, 06E-270, the washers 06E-220 and the caps 06E-260.

(e) Attach the angles 06E-190 with the screws 06E-210 and the washers 06E-220 to the aft side wall assembly 06E-010.

(f) Attach the oxygen container assy 06E-200 with the screws 06E-210 and the washers 06E-220 to the angles 06E-190.

(g) Attach the ground cable in accordance with the Process and Material Specification PMS 01-04-58 to the oxygen container assy 06E-200.

(h) Attach the angle 06E-160 with the screws 06E-210 and the washers 06E-220 to the aft side wall assembly 06E-010.

(i) Attach the cover oxygen container assy 06E-150 with the screws 06E-170 and the nuts 06E-180 to the angle 06E-160.

(j) Attach the studs 06E-230 and the washers 06E-220 to the cover oxygen container assy 06E-150.

(k) Install and assemble the handle assembly 06E-110 as follows:

1 Attach the special screws 06E-120 and the special washers 06E-140 to the aft side wall assembly 06E-010.

2 Attach the handle assembly 06E-110 to the aft side wall assembly 06E-010.

3 Attach the security pins 06E-130 to the handle assembly 06E-110.

SUB TASK 25-41-51-410-033-H01
D2549030503600

8. Installation of the Side Wall (06E-1)

(a) Attach the brackets 06E-013, 06E-017 to the aft side wall assembly 06E-010.

(b) Attach the fittings 06E-020, 06E-025 with the screws 06E-030, 06E-035 to the brackets 06E-013.

(c) Assemble the post assembly 06E-240 as follows:

1 Attach the screws 06E-243.

(d) Attach the post assembly 06E-240 with the screws 06E-250, 06E-270, the washers 06E-220 and the caps 06E-260.

(e) Attach the angles 06E-190 with the screws 06E-210 and the washers 06E-220 to the aft side wall assembly 06E-010.

(f) Attach the oxygen container assy 06E-200 with the screws 06E-210 and the washers 06E-220 to the angles 06E-190.

(g) Attach the ground cable in accordance with the Process and Material Specification PMS 01-04-58 to the oxygen container assy 06E-200.

(h) Attach the angle 06E-160 with the screws 06E-210 and the washers 06E-220 to the aft side wall assembly 06E-010.

(i) Attach the cover oxygen container assy 06E-150 with the screws 06E-170 and the nuts 06E-180 to the angle 06E-160.

(j) Attach the studs 06E-230 and the washers 06E-220 to the cover oxygen container assy 06E-150.

(k) Install and assemble the handle assembly 06E-110 as follows:

1 Attach the special screws 06E-120 and the special washers 06E-140 to the aft side wall assembly 06E-010.

2 Attach the handle assembly 06E-110 to the aft side wall assembly 06E-010.

3 Attach the security pins 06E-130 to the handle assembly 06E-110.

SUB TASK 25-41-51-410-033-J01
D2549020603800

9. Installation of the Side Wall (06E-1)

(a) Attach the brackets 06E-013, 06E-017 to the aft side wall assembly 06E-010.

(b) Attach the fittings 06E-020, 06E-025 with the screws 06E-030, 06E-035 to the brackets 06E-013.

(c) Assemble the post assembly 06E-240 as follows:

1 Attach the screws 06E-243.

(d) Attach the post assembly 06E-240 with the screws 06E-250, 06E-270, the washers 06E-220 and the caps 06E-260.

(e) Attach the angles 06E-190 with the screws 06E-210 and the washers 06E-220 to the aft side wall assembly 06E-010.

(f) Attach the oxygen container assy 06E-200 with the screws 06E-210 and the washers 06E-220 to the angles 06E-190.

(g) Attach the ground cable in accordance with the Process and Material Specification PMS 01-04-58 to the oxygen container assy 06E-200.

(h) Attach the angle 06E-160 with the screws 06E-210 and the washers 06E-220 to the aft side wall assembly 06E-010.

(i) Attach the cover oxygen container assy 06E-150 with the screws 06E-170 and the nuts 06E-180 to the angle 06E-160.

(j) Attach the studs 06E-230 and the washers 06E-220 to the cover oxygen container assy 06E-150.

(k) Install and assemble the handle assembly 06E-110 as follows:

1 Attach the special screws 06E-120 and the special washers 06E-140 to the aft side wall assembly 06E-010.

2 Attach the handle assembly 06E-110 to the aft side wall assembly 06E-010.

3 Attach the security pins 06E-130 to the handle assembly 06E-110.

SUB TASK 25-41-51-410-033-K01
D2549020605800

10. Installation of the Side Wall (06E-1)

(a) Attach the fittings 06E-020, 06E-025 with the screws 06E-030, 06E-035 to the brackets 06E-013.

(b) Assemble the post assembly 06E-240 as follows:

1 Attach the screws 06E-243.

(c) Attach the post assembly 06E-240 with the screws 06E-250, 06E-270, the washers 06E-220 and the caps 06E-260.

(d) Attach the angles 06E-190 with the screws 06E-210 and the washers 06E-220 to the aft side wall assembly 06E-010.

(e) Attach the oxygen container assy 06E-200 with the screws 06E-210 and the washers 06E-220 to the angles 06E-190.

(f) Attach the ground cable in accordance with the Process and Material Specification PMS 01-04-58 to the oxygen container assy 06E-200.

(g) Attach the angle 06E-160 with the screws 06E-210 and the washers 06E-220 to the aft side wall assembly 06E-010.

(h) Attach the cover oxygen container assy 06E-150 with the screws 06E-170 and the nuts 06E-180 to the angle 06E-160.

(i) Attach the studs 06E-230 and the washers 06E-220 to the cover oxygen container assy 06E-150.

(j) Install and assemble the handle assembly 06E-110 as follows:

1 Attach the special screws 06E-120 and the special washers 06E-140 to the aft side wall assembly 06E-010.

2 Attach the handle assembly 06E-110 to the aft side wall assembly 06E-010.

3 Attach the security pins 06E-130 to the handle assembly 06E-110.

TASK 25-41-51-400-819-G01
D2549010509400 D2549010509600 D2549010510400 D2549010511400 D2549020506200 D2549020604200 D2549020605200 D2549020607200 D2549020609200 D2549030504000 D2549030504600 D2549030505600 D2549030506000 R225401160-002

190. Installation of the Side Wall

A. General

This task gives you the installation and assembly procedures of the component.

B. Job Set-up Information

(1) Not applicable

C. Procedure

WARNING: BE CAREFUL WHEN YOU USE SOLVENTS/CLEANING AGENTS, SEALANTS AND OTHER MATERIALS. OBEY THE MATERIAL MANUFACTURER'S INSTRUCTIONS AND THE LOCAL REGULATIONS. MAKE SURE THAT THERE IS A GOOD FLOW OF AIR THROUGH THE WORK AREA. DO NOT BREATHE THE FUMES. DO NOT SMOKE. DO NOT USE THESE MATERIALS NEAR A FLAME, SPARKS OR SOURCES OF HEAT. USE PROTECTIVE CLOTHING, GOGGLES AND GLOVES. IF YOU GET ONE OF THESE MATERIALS ON YOUR SKIN OR IN YOUR EYES, FLUSH IT AWAY WITH A FLOW OF CLEAN WATER. IF YOU GET ONE OF THESE MATERIALS IN YOUR MOUTH, GET IMMEDIATE MEDICAL AID. IN GENERAL, THESE MATERIALS ARE POISONOUS, FLAMMABLE AND SKIN IRRITANTS.

WARNING: KEEP ALL HYDROCARBONS (FUELS, LUBRICANTS, ETC.) AWAY FROM ALL SOURCES OF OXYGEN. OXYGEN BECOMES EXPLOSIVE WHEN IT TOUCHES HYDROCARBONS.

WARNING: TO PREVENT CONTAMINATION OF THE OXYGEN SYSTEM, MAKE SURE THAT YOUR HANDS AND ALL THE TOOLS ARE CLEAN.

CAUTION: DO ALL THE WORK ON A CLEAN, SOFT SURFACE TO PREVENT DAMAGE TO THE COMPONENTS.

CAUTION: MAKE SURE THAT ALL THE PARTS ARE CLEAN BEFORE YOU ASSEMBLE THEM.

SUB TASK 25-41-51-410-034-A01
D2549010511400

1. Installation of the Side Wall (06F-1)

(a) Attach the brackets 06F-013, 06F-017 to the aft side wall assembly 06F-010.

(b) Attach the fittings 06F-020 with the screws 06F-030 to the brackets 06F-013.

(c) Assemble the post assembly 06F-240 as follows:

1 Attach the screws 06F-243.

(d) Attach the post assembly 06F-240 with the screws 06F-250, 06F-270, the washers 06F-220 and the caps 06F-260.

(e) Attach the angles 06F-190 with the screws 06F-210 and the washers 06F-220 to the aft side wall assembly 06F-010.

(f) Attach the oxygen container assy 06F-200 with the screws 06F-210 and the washers 06F-220 to the angles 06F-190.

(g) Attach the ground cable in accordance with the Process and Material Specification PMS 01-04-58 to the oxygen container assy 06F-200.

(h) Attach the angle 06F-160 with the screws 06F-210 and the washers 06F-220 to the aft side wall assembly 06F-010.

(i) Attach the cover oxygen container assy 06F-150 with the screws 06F-170 and the nuts 06F-180 to the angle 06F-160.

(j) Attach the studs 06F-230 and the washers 06F-220 to the cover oxygen container assy 06F-150.

(k) Attach the coat hook 06F-300 with the screw 06F-310.

(l) Attach the screws 06F-290 to the aft side wall assembly 06F-010.

(m) Attach the toilet seat cover dispenser 06F-280 to the screws 06F-290.

(n) Install and assemble the handle assembly 06F-110 as follows:

1 Attach the special screws 06F-120 and the special washers 06F-140 to the aft side wall assembly 06F-010.

2 Attach the handle assembly 06F-110 to the aft side wall assembly 06F-010.

3 Attach the security pins 06F-130 to the handle assembly 06F-110.

SUB TASK 25-41-51-410-034-B01
D2549020609200 D2549030506000 R225401160-002

2. Installation of the Side Wall (06F-1)

(a) Attach the brackets 06F-013, 06F-017 to the aft side wall assembly 06F-010.

(b) Attach the fittings 06F-020 with the screws 06F-030 to the brackets 06F-013.

(c) Assemble the post assembly 06F-240 as follows:

1 Attach the screws 06F-243.

(d) Attach the post assembly 06F-240 with the screws 06F-250, 06F-270, the washers 06F-220 and the caps 06F-260.

(e) Attach the angles 06F-190 with the screws 06F-210 and the washers 06F-220 to the aft side wall assembly 06F-010.

(f) Attach the oxygen container assy 06F-200 with the screws 06F-210, 06F-215 and the washers 06F-220 to the angles 06F-190.

(g) Attach the ground cable in accordance with the Process and Material Specification PMS 01-04-58 to the oxygen container assy 06F-200.

(h) Attach the angle 06F-160 with the screws 06F-210 and the washers 06F-220 to the aft side wall assembly 06F-010.

(i) Attach the cover oxygen container assy 06F-150 with the screws 06F-170 and the nuts 06F-180 to the angle 06F-160.

(j) Attach the studs 06F-230 and the washers 06F-220 to the cover oxygen container assy 06F-150.

(k) Install and assemble the handle assembly 06F-340 as follows:

1 Attach the special screws 06F-350 and the special washers 06F-370 to the aft side wall assembly 06F-010.

2 Attach the handle assembly 06F-340 to the aft side wall assembly 06F-010.

3 Attach the security pins 06F-360 to the handle assembly 06F-110.

(l) Install and assemble the handle assembly 06F-110 as follows:

1 Attach the special screws 06F-120 and the special washers 06F-140 to the aft side wall assembly 06F-010.

2 Attach the handle assembly 06F-110 to the aft side wall assembly 06F-010.

3 Attach the security pins 06F-130 to the handle assembly 06F-110.

SUB TASK 25-41-51-410-034-C01
D2549030504000

3. Installation of the Side Wall (06F-1)

(a) Attach the brackets 06F-013, 06F-017 to the aft side wall assembly 06F-010.

(b) Attach the fittings 06F-020 with the screws 06F-030 to the brackets 06F-013.

(c) Assemble the post assembly 06F-240 as follows:

1 Attach the screws 06F-243.

(d) Attach the post assembly 06F-240 with the screws 06F-250, 06F-270, the washers 06F-220 and the caps 06F-260.

(e) Attach the angle 06F-420 with the screws 06F-440, 06F-460 and the washers 06F-430 to the lavatory structure.

(f) Attach the angles 06F-190 with the screws 06F-210 and the washers 06F-220 to the aft side wall assembly 06F-010.

(g) Attach the oxygen container assy 06F-200 with the screws 06F-210 and the washers 06F-220 to the angles 06F-190.

(h) Attach the ground cable in accordance with the Process and Material Specification PMS 01-04-58 to the oxygen container assy 06F-200.

(i) Attach the angle 06F-160 with the screws 06F-210 and the washers 06F-220 to the aft side wall assembly 06F-010.

(j) Attach the cover oxygen container assy 06F-150 with the screws 06F-170 and the nuts 06F-180 to the angle 06F-160.

(k) Attach the studs 06F-230 and the washers 06F-220 to the cover oxygen container assy 06F-150.

(l) Attach the screws 06F-290 to the aft side wall assembly 06F-010.

(m) Attach the toilet seat cover dispenser 06F-280 to the screws 06F-290.

(n) Install and assemble the handle assembly 06F-110 as follows:

1 Attach the special screws 06F-120 and the special washers 06F-140 to the aft side wall assembly 06F-010.

2 Attach the handle assembly 06F-110 to the aft side wall assembly 06F-010.

3 Attach the security pins 06F-130 to the handle assembly 06F-110.

SUB TASK 25-41-51-410-034-D01
D2549020604200 D2549020607200

4. Installation of the Side Wall (06F-1)

(a) Attach the brackets 06F-013, 06F-017 to the aft side wall assembly 06F-010.

(b) Attach the fittings 06F-020 with the screws 06F-030 to the brackets 06F-013.

(c) Assemble the post assembly 06F-240 as follows:

1 Attach the screws 06F-243.

(d) Attach the post assembly 06F-240 with the screws 06F-250, 06F-270, the washers 06F-220 and the caps 06F-260.

(e) Attach the angles 06F-190 with the screws 06F-210 and the washers 06F-220 to the aft side wall assembly 06F-010.

(f) Attach the oxygen container assy 06F-200 with the screws 06F-210 and the washers 06F-220 to the angles 06F-190.

(g) Attach the ground cable in accordance with the Process and Material Specification PMS 01-04-58 to the oxygen container assy 06F-200.

(h) Attach the angle 06F-160 with the screws 06F-210 and the washers 06F-220 to the aft side wall assembly 06F-010.

(i) Attach the cover oxygen container assy 06F-150 with the screws 06F-170 and the nuts 06F-180 to the angle 06F-160.

(j) Attach the studs 06F-230 and the washers 06F-220 to the cover oxygen container assy 06F-150.

(k) Attach the screws 06F-290 to the aft side wall assembly 06F-010.

(l) Attach the toilet seat cover dispenser 06F-280 to the screws 06F-290.

(m) Install and assemble the handle assembly 06F-110 as follows:

1 Attach the special screws 06F-120 and the special washers 06F-140 to the aft side wall assembly 06F-010.

2 Attach the handle assembly 06F-110 to the aft side wall assembly 06F-010.

3 Attach the security pins 06F-130 to the handle assembly 06F-110.

SUB TASK 25-41-51-410-034-E01
D2549020605200

5. Installation of the Side Wall (06F-1)

(a) Attach the brackets 06F-013, 06F-017 to the aft side wall assembly 06F-010.

(b) Attach the fittings 06F-020 with the screws 06F-030 to the brackets 06F-013.

(c) Assemble the post assembly 06F-240 as follows:

1 Attach the screws 06F-243.

(d) Attach the post assembly 06F-240 with the screws 06F-250, 06F-270, the washers 06F-220 and the caps 06F-260.

(e) Attach the angles 06F-190 with the screws 06F-210 and the washers 06F-220 to the aft side wall assembly 06F-010.

(f) Attach the oxygen container assy 06F-200 with the screws 06F-210 and the washers 06F-220 to the angles 06F-190.

(g) Attach the ground cable in accordance with the Process and Material Specification PMS 01-04-58 to the oxygen container assy 06F-200.

(h) Attach the angle 06F-160 with the screws 06F-210 and the washers 06F-220 to the aft side wall assembly 06F-010.

(i) Attach the cover oxygen container assy 06F-150 with the screws 06F-170 and the nuts 06F-180 to the angle 06F-160.

(j) Attach the studs 06F-230 and the washers 06F-220 to the cover oxygen container assy 06F-150.

(k) Install and assemble the handle assembly 06F-110 as follows:

1 Attach the special screws 06F-120 and the special washers 06F-140 to the aft side wall assembly 06F-010.

2 Attach the handle assembly 06F-110 to the aft side wall assembly 06F-010.

3 Attach the security pins 06F-130 to the handle assembly 06F-110.

SUB TASK 25-41-51-410-034-F01
D2549030504600

6. Installation of the Side Wall (06F-1)

(a) Attach the brackets 06F-013, 06F-017 to the aft side wall assembly 06F-010.

(b) Attach the fittings 06F-020 with the screws 06F-030 to the brackets 06F-013.

(c) Assemble the post assembly 06F-240 as follows:

1 Attach the screws 06F-243.

(d) Attach the post assembly 06F-240 with the screws 06F-250, 06F-270, the washers 06F-220 and the caps 06F-260.

(e) Attach the angles 06F-190 with the screws 06F-210 and the washers 06F-220 to the aft side wall assembly 06F-010.

(f) Attach the oxygen container assy 06F-200 with the screws 06F-210 and the washers 06F-220 to the angles 06F-190.

(g) Attach the ground cable in accordance with the Process and Material Specification PMS 01-04-58 to the oxygen container assy 06F-200.

(h) Attach the angle 06F-160 with the screws 06F-210 and the washers 06F-220 to the aft side wall assembly 06F-010.

(i) Attach the cover oxygen container assy 06F-150 with the screws 06F-170 and the nuts 06F-180 to the angle 06F-160.

(j) Attach the studs 06F-230 and the washers 06F-220 to the cover oxygen container assy 06F-150.

(k) Install and assemble the handle assembly 06F-110 as follows:

1 Attach the special screws 06F-120 and the special washers 06F-140 to the aft side wall assembly 06F-010.

2 Attach the handle assembly 06F-110 to the aft side wall assembly 06F-010.

3 Attach the security pins 06F-130 to the handle assembly 06F-110.

SUB TASK 25-41-51-410-034-G01
D2549010509400 D2549010509600 D2549030505600

7. Installation of the Side Wall (06F-1)

(a) Attach the brackets 06F-013, 06F-017 to the aft side wall assembly 06F-010.

(b) Attach the fittings 06F-020 with the screws 06F-030 to the brackets 06F-013.

(c) Assemble the post assembly 06F-240 as follows:

1 Attach the screws 06F-243.

(d) Attach the post assembly 06F-240 with the screws 06F-250, 06F-270, the washers 06F-220 and the caps 06F-260.

(e) Attach the angles 06F-190 with the screws 06F-210 and the washers 06F-220 to the aft side wall assembly 06F-010.

(f) Attach the oxygen container assy 06F-200 with the screws 06F-210 and the washers 06F-220 to the angles 06F-190.

(g) Attach the ground cable in accordance with the Process and Material Specification PMS 01-04-58 to the oxygen container assy 06F-200.

(h) Attach the angle 06F-160 with the screws 06F-210 and the washers 06F-220 to the aft side wall assembly 06F-010.

(i) Attach the cover oxygen container assy 06F-150 with the screws 06F-170 and the nuts 06F-180 to the angle 06F-160.

(j) Attach the studs 06F-230 and the washers 06F-220 to the cover oxygen container assy 06F-150.

(k) Install and assemble the handle assembly 06F-110 as follows:

1 Attach the special screws 06F-120 and the special washers 06F-140 to the aft side wall assembly 06F-010.

2 Attach the handle assembly 06F-110 to the aft side wall assembly 06F-010.

3 Attach the security pins 06F-130 to the handle assembly 06F-110.

SUB TASK 25-41-51-410-034-H01
D2549020506200

8. Installation of the Side Wall (06F-1)

(a) Attach the brackets 06F-013, 06F-017 to the aft side wall assembly 06F-010.

(b) Attach the fittings 06F-020 with the screws 06F-030 to the brackets 06F-013.

(c) Assemble the post assembly 06F-240 as follows:

1 Attach the screws 06F-243.

(d) Attach the post assembly 06F-240 with the screws 06F-250, 06F-270, the washers 06F-220 and the caps 06F-260.

(e) Attach the angle 06F-420 with the screws 06F-440, 06F-460 and the washers 06F-430 to the lavatory structure.

(f) Attach the angles 06F-190 with the screws 06F-210 and the washers 06F-220 to the aft side wall assembly 06F-010.

(g) Attach the oxygen container assy 06F-200 with the screws 06F-210 and the washers 06F-220 to the angles 06F-190.

(h) Attach the ground cable in accordance with the Process and Material Specification PMS 01-04-58 to the oxygen container assy 06F-200.

(i) Attach the angle 06F-160 with the screws 06F-210 and the washers 06F-220 to the aft side wall assembly 06F-010.

(j) Attach the cover oxygen container assy 06F-150 with the screws 06F-170 and the nuts 06F-180 to the angle 06F-160.

(k) Attach the studs 06F-230 and the washers 06F-220 to the cover oxygen container assy 06F-150.

(l) Install and assemble the handle assembly 06F-110 as follows:

1 Attach the special screws 06F-120 and the special washers 06F-140 to the aft side wall assembly 06F-010.

2 Attach the handle assembly 06F-110 to the aft side wall assembly 06F-010.

3 Attach the security pins 06F-130 to the handle assembly 06F-110.

SUB TASK 25-41-51-410-034-J01
D2549010510400

9. Installation of the Side Wall (06F-1)

(a) Attach the brackets 06F-013, 06F-017 to the aft side wall assembly 06F-010.

(b) Attach the fittings 06F-020 with the screws 06F-030 to the brackets 06F-013.

(c) Assemble the post assembly 06F-240 as follows:

1 Attach the screws 06F-243.

(d) Attach the post assembly 06F-240 with the screws 06F-250, 06F-270, the washers 06F-220 and the caps 06F-260.

(e) Attach the angles 06F-190 with the screws 06F-210 and the washers 06F-220 to the aft side wall assembly 06F-010.

(f) Attach the oxygen container assy 06F-200 with the screws 06F-210 and the washers 06F-220 to the angles 06F-190.

(g) Attach the ground cable in accordance with the Process and Material Specification PMS 01-04-58 to the oxygen container assy 06F-200.

(h) Attach the angle 06F-160 with the screws 06F-210 and the washers 06F-220 to the aft side wall assembly 06F-010.

(i) Attach the cover oxygen container assy 06F-150 with the screws 06F-170 and the nuts 06F-180 to the angle 06F-160.

(j) Attach the studs 06F-230 and the washers 06F-220 to the cover oxygen container assy 06F-150.

(k) Attach the screws 06F-290 to the aft side wall assembly 06F-010.

(l) Attach the toilet seat cover dispenser 06F-280 to the screws 06F-290.

(m) Install and assemble the handle assembly 06F-110 as follows:

1 Attach the special screws 06F-120 and the special washers 06F-140 to the aft side wall assembly 06F-010.

2 Attach the handle assembly 06F-110 to the aft side wall assembly 06F-010.

3 Attach the security pins 06F-130 to the handle assembly 06F-110.

TASK 25-41-51-400-819-H01
D2549010509800 D2549010510000 D2549010512000 D2549020604400 D2549020604800 D2549020606800 D2549020607600 D2549020608600 D2549020609000 D2549020609600 D2549020610400 D2549020701200 D2549030505800 D2549030506200 D2549030506800 D2549030507000 R225401172-002

191. Installation of the Side Wall

A. General

This task gives you the installation and assembly procedures of the component.

B. Job Set-up Information
(1) Consumable Materials

REFERENCE	DESIGNATION
08-007	Sealant, High Temperature

Table 7022
Consumable Materials

C. Procedure

WARNING: **BE CAREFUL WHEN YOU USE SOLVENTS/CLEANING AGENTS, SEALANTS AND OTHER MATERIALS. OBEY THE MATERIAL MANUFACTURER'S INSTRUCTIONS AND THE LOCAL REGULATIONS. MAKE SURE THAT THERE IS A GOOD FLOW OF AIR THROUGH THE WORK AREA. DO NOT BREATHE THE FUMES. DO NOT SMOKE. DO NOT USE THESE MATERIALS NEAR A FLAME, SPARKS OR SOURCES OF HEAT. USE PROTECTIVE CLOTHING, GOGGLES AND GLOVES. IF YOU GET ONE OF THESE MATERIALS ON YOUR SKIN OR IN YOUR EYES, FLUSH IT AWAY WITH A FLOW OF CLEAN WATER. IF YOU GET ONE OF THESE MATERIALS IN YOUR MOUTH, GET IMMEDIATE MEDICAL AID. IN GENERAL, THESE MATERIALS ARE POISONOUS, FLAMMABLE AND SKIN IRRITANTS.**

WARNING: **KEEP ALL HYDROCARBONS (FUELS, LUBRICANTS, ETC.) AWAY FROM ALL SOURCES OF OXYGEN. OXYGEN BECOMES EXPLOSIVE WHEN IT TOUCHES HYDROCARBONS.**

WARNING: **TO PREVENT CONTAMINATION OF THE OXYGEN SYSTEM, MAKE SURE THAT YOUR HANDS AND ALL THE TOOLS ARE CLEAN.**

CAUTION: **DO ALL THE WORK ON A CLEAN, SOFT SURFACE TO PREVENT DAMAGE TO THE COMPONENTS.**

CAUTION: **MAKE SURE THAT ALL THE PARTS ARE CLEAN BEFORE YOU ASSEMBLE THEM.**

SUB TASK 25-41-51-410-035-A01
D2549010509800 D2549010512000

1. Installation of the Side Wall (06G-1)

   (a) Attach the brackets 06G-013, 06G-017 to the aft side wall assembly 06G-010.

   (b) Attach the fittings 06G-020 with the screws 06G-030 to the brackets 06G-013.

   (c) Assemble the post assembly 06G-240 as follows:

      1 Attach the screws 06G-243.

   (d) Attach the post assembly 06G-240 with the screws 06G-250, 06G-270, the washers 06G-220 and the caps 06G-260.

   (e) Attach the angles 06G-190 with the screws 06G-210 and the washers 06G-220 to the aft side wall assembly 06G-010.

   (f) Attach the oxygen container assy 06G-200 with the screws 06G-210 and the washers 06G-220 to the angles 06G-190.

   (g) Attach the ground cable in accordance with the Process and Material Specification PMS 01-04-58 to the oxygen container assy 06G-200.

   (h) Attach the angle 06G-160 with the screws 06G-210 and the washers 06G-220 to the aft side wall assembly 06G-010.

   (i) Attach the cover oxygen container assy 06G-150 with the screws 06G-170 and the nuts 06G-180 to the angle 06G-160.

   (j) Attach the studs 06G-230 and the washers 06G-220 to the cover oxygen container assy 06G-150.

   (k) Attach the support 06G-300 with the screws 06G-251 and the washers 06G-221 to the aft side wall assembly 06G-010.

   (l) Install and assemble the handle assembly 06G-110 as follows:

      1 Attach the special screws 06G-120 and the special washers 06G-140 to the aft side wall assembly 06G-010.

2 Attach the handle assembly 06G-110 to the aft side wall assembly 06G-010.

3 Attach the security pins 06G-130 to the handle assembly 06G-110.

SUB TASK 25-41-51-410-035-B01
D2549020604400 D2549020608600 D2549020610400 D2549030505800 D2549030506800

2. Installation of the Side Wall (06G-1)

(a) Attach the brackets 06G-013, 06G-017 to the aft side wall assembly 06G-010.

(b) Attach the fittings 06G-020 with the screws 06G-030 to the brackets 06G-013.

(c) Assemble the post assembly 06G-240 as follows:

1 Attach the screws 06G-243.

(d) Attach the post assembly 06G-240 with the screws 06G-250, 06G-270, the washers 06G-220 and the caps 06G-260.

(e) Attach the angles 06G-190 with the screws 06G-210 and the washers 06G-220 to the aft side wall assembly 06G-010.

(f) Attach the oxygen container assy 06G-200 with the screws 06G-210 and the washers 06G-220 to the angles 06G-190.

(g) Attach the ground cable in accordance with the Process and Material Specification PMS 01-04-58 to the oxygen container assy 06G-200.

(h) Attach the angle 06G-160 with the screws 06G-210 and the washers 06G-220 to the aft side wall assembly 06G-010.

(i) Attach the cover oxygen container assy 06G-150 with the screws 06G-170 and the nuts 06G-180 to the angle 06G-160.

(j) Attach the studs 06G-230 and the washers 06G-220 to the cover oxygen container assy 06G-150.

(k) Attach the screws 06G-290 to the aft side wall assembly 06G-010.

(l) Attach the toilet seat cover dispenser 06G-280 to the screws 06G-290.

(m) Install and assemble the handle assembly 06G-110 as follows:

1 Attach the special screws 06G-120 and the special washers 06G-140 to the aft side wall assembly 06G-010.

2 Attach the handle assembly 06G-110 to the aft side wall assembly 06G-010.

3 Attach the security pins 06G-130 to the handle assembly 06G-110.

SUB TASK 25-41-51-410-035-C01
D2549020701200

3. Installation of the Side Wall (06G-1)

(a) Attach the brackets 06G-013, 06G-017 to the aft side wall assembly 06G-010.

(b) Attach the fittings 06G-020 with the screws 06G-030 to the brackets 06G-013.

(c) Assemble the post assembly 06G-240 as follows:

1 Attach the screws 06G-243.

(d) Attach the post assembly 06G-240 with the screws 06G-250, 06G-270, the washers 06G-220 and the caps 06G-260.

(e) Assemble the single door emergency unlocking device assembly 06G-320 as follows:

WARNING: BE CAREFUL WHEN YOU USE MATERIAL NO. 08-007 SEALANT, HIGH TEMPERATURE. OBEY THE MATERIAL MANUFACTURER'S INSTRUCTIONS.

1 Apply the Material No. 08-007 Sealant, High Temperature to the snap catch 06G-370 and to the pin 06G-360 and attach the emergency unlocking-device pivot 06G-350, the snap catch 06G-370 and the pin 06G-360 to the emergency unlocking-device housing 06G-330.

NOTE: Adjust the snap catch 06G-370 a half turn before stop.

WARNING: BE CAREFUL WHEN YOU USE MATERIAL NO. 08-007 SEALANT, HIGH TEMPERATURE. OBEY THE MATERIAL MANUFACTURER'S INSTRUCTIONS.

2 Apply the Material No. 08-007 Sealant, High Temperature to the bolt 06G-380 and attach the emergency unlocking-device strike 06G-340 with the bolt 06G-380 to the emergency unlocking-device housing 06G-330.

(f) Attach the single door emergency unlocking device assembly 06G-320 and the plates 06G-390 with the screws 06G-400 and the nuts 06G-410 to the post assembly 06G-240.

(g) Attach the angle 06G-420 with the screws 06G-440, 06G-460 and the washers 06G-430 to the aft side wall assembly 06G-010.

(h) Attach the angles 06G-190 with the screws 06G-210 and the washers 06G-220 to the aft side wall assembly 06G-010.

(i) Attach the oxygen container assy 06G-200 with the screws 06G-210 and the washers 06G-220 to the angles 06G-190.

(j) Attach the ground cable in accordance with the Process and Material Specification PMS 01-04-58 to the oxygen container assy 06G-200.

(k) Attach the angle 06G-160 with the screws 06G-210 and the washers 06G-220 to the aft side wall assembly 06G-010.

(l) Attach the cover oxygen container assy 06G-150 with the screws 06G-170 and the nuts 06G-180 to the angle 06G-160.

(m) Attach the studs 06G-230 and the washers 06G-220 to the cover oxygen container assy 06G-150.

(n) Install and assemble the handle assembly 06G-110 as follows:

1 Attach the special screws 06G-120 and the special washers 06G-140 to the aft side wall assembly 06G-010.

2 Attach the handle assembly 06G-110 to the aft side wall assembly 06G-010.

3 Attach the security pins 06G-130 to the handle assembly 06G-110.

SUB TASK 25-41-51-410-035-D01
D2549020606800 D2549020609600

4. Installation of the Side Wall (06G-1)

(a) Attach the brackets 06G-013, 06G-017 to the aft side wall assembly 06G-010.

(b) Attach the fittings 06G-020 with the screws 06G-030 to the brackets 06G-013.

(c) Assemble the post assembly 06G-240 as follows:

1 Attach the screws 06G-243.

(d) Attach the post assembly 06G-240 with the screws 06G-250, 06G-270, the washers 06G-220 and the caps 06G-260.

(e) Assemble the single door emergency unlocking device assembly 06G-320 as follows:

WARNING: BE CAREFUL WHEN YOU USE MATERIAL NO. 08-007 SEALANT, HIGH TEMPERATURE. OBEY THE MATERIAL MANUFACTURER'S INSTRUCTIONS.

1 Apply the Material No. 08-007 Sealant, High Temperature to the snap catch 06G-370 and to the pin 06G-360 and attach the emergency unlocking-device pivot 06G-350, the snap catch 06G-370 and the pin 06G-360 to the emergency unlocking-device housing 06G-330.

NOTE: Adjust the snap catch 06G-370 a half turn before stop.

WARNING: BE CAREFUL WHEN YOU USE MATERIAL NO. 08-007 SEALANT, HIGH TEMPERATURE. OBEY THE MATERIAL MANUFACTURER'S INSTRUCTIONS.

2 Apply the Material No. 08-007 Sealant, High Temperature to the bolt 06G-380 and attach the emergency unlocking-device strike 06G-340 with the bolt 06G-380 to the emergency unlocking-device housing 06G-330.

(f) Attach the single door emergency unlocking device assembly 06G-320 and the plates 06G-390 with the screws 06G-400 and the nuts 06G-410 to the post assembly 06G-240.

(g) Attach the angles 06G-190 with the screws 06G-210 and the washers 06G-220 to the aft side wall assembly 06G-010.

(h) Attach the oxygen container assy 06G-200 with the screws 06G-210 and the washers 06G-220 to the angles 06G-190.

(i) Attach the ground cable in accordance with the Process and Material Specification PMS 01-04-58 to the oxygen container assy 06G-200.

(j) Attach the angle 06G-160 with the screws 06G-210 and the washers 06G-220 to the aft side wall assembly 06G-010.

(k) Attach the cover oxygen container assy 06G-150 with the screws 06G-170 and the nuts 06G-180 to the angle 06G-160.

(l) Attach the studs 06G-230 and the washers 06G-220 to the cover oxygen container assy 06G-150.

(m) Install and assemble the handle assembly 06G-110 as follows:

1 Attach the special screws 06G-120 and the special washers 06G-140 to the aft side wall assembly 06G-010.

2 Attach the handle assembly 06G-110 to the aft side wall assembly 06G-010.

3 Attach the security pins 06G-130 to the handle assembly 06G-110.

SUB TASK 25-41-51-410-035-E01
D2549030507000 R225401172-002

5. Installation of the Side Wall (06G-1)

(a) Attach the brackets 06G-013, 06G-017 to the aft side wall assembly 06G-010.

(b) Attach the fittings 06G-020 with the screws 06G-030 to the brackets 06G-013.

(c) Assemble the post assembly 06G-240 as follows:

1 Attach the screws 06G-243.

(d) Attach the post assembly 06G-240 with the screws 06G-250, 06G-270, the washers 06G-220 and the caps 06G-260.

(e) Attach the angles 06G-190 with the screws 06G-210 and the washers 06G-220 to the aft side wall assembly 06G-010.

(f) Attach the oxygen container assy 06G-200 with the screws 06G-210, 06G-212 and the washers 06G-220 to the angles 06G-190.

(g) Attach the ground cable in accordance with the Process and Material Specification PMS 01-04-58 to the oxygen container assy 06G-200.

(h) Attach the angle 06G-160 with the screws 06G-210 and the washers 06G-220 to the aft side wall assembly 06G-010.

(i) Attach the cover oxygen container assy 06G-150 with the screws 06G-170 and the nuts 06G-180 to the angle 06G-160.

(j) Attach the studs 06G-230 and the washers 06G-220 to the cover oxygen container assy 06G-150.

(k) Attach the screws 06G-290 to the aft side wall assembly 06G-010.

(l) Attach the toilet seat cover dispenser 06G-280 to the screws 06G-290.

(m) Install and assemble the handle assembly 06G-110 as follows:

1 Attach the special screws 06G-120 and the special washers 06G-140 to the aft side wall assembly 06G-010.

2 Attach the handle assembly 06G-110 to the aft side wall assembly 06G-010.

3 Attach the security pins 06G-130 to the handle assembly 06G-110.

SUB TASK 25-41-51-410-035-F01
D2549010510000

6. Installation of the Side Wall (06G-1)

(a) Attach the brackets 06G-013, 06G-017 to the aft side wall assembly 06G-010.

(b) Attach the fittings 06G-020 with the screws 06G-030 to the brackets 06G-013.

(c) Assemble the post assembly 06G-240 as follows:

1 Attach the screws 06G-243.

(d) Attach the post assembly 06G-240 with the screws 06G-250, 06G-270, the washers 06G-220 and the caps 06G-260.

(e) Attach the angles 06G-190 with the screws 06G-210 and the washers 06G-220 to the aft side wall assembly 06G-010.

(f) Attach the oxygen container assy 06G-200 with the screws 06G-210 and the washers 06G-220 to the angles 06G-190.

(g) Attach the ground cable in accordance with the Process and Material Specification PMS 01-04-58 to the oxygen container assy 06G-200.

(h) Attach the angle 06G-160 with the screws 06G-210 and the washers 06G-220 to the aft side wall assembly 06G-010.

(i) Attach the cover oxygen container assy 06G-150 with the screws 06G-170 and the nuts 06G-180 to the angle 06G-160.

(j) Attach the studs 06G-230 and the washers 06G-220 to the cover oxygen container assy 06G-150.

(k) Install and assemble the handle assembly 06G-110 as follows:

1 Attach the special screws 06G-120 and the special washers 06G-140 to the aft side wall assembly 06G-010.

2 Attach the handle assembly 06G-110 to the aft side wall assembly 06G-010.

3 Attach the security pins 06G-130 to the handle assembly 06G-110.

SUB TASK 25-41-51-410-035-G01
D2549020607600 D2549020609000 D2549030506200

7. Installation of the Side Wall (06G-1)

(a) Attach the brackets 06G-013, 06G-017 to the aft side wall assembly 06G-010.

(b) Attach the fittings 06G-020 with the screws 06G-030 to the brackets 06G-013.

(c) Assemble the post assembly 06G-240 as follows:

1 Attach the screws 06G-243.

(d) Attach the post assembly 06G-240 with the screws 06G-250, 06G-270, the washers 06G-220 and the caps 06G-260.

(e) Attach the angles 06G-190 with the screws 06G-210 and the washers 06G-220 to the aft side wall assembly 06G-010.

(f) Attach the oxygen container assy 06G-200 with the screws 06G-210 and the washers 06G-220 to the angles 06G-190.

(g) Attach the ground cable in accordance with the Process and Material Specification PMS 01-04-58 to the oxygen container assy 06G-200.

(h) Attach the angle 06G-160 with the screws 06G-210 and the washers 06G-220 to the aft side wall assembly 06G-010.

(i) Attach the cover oxygen container assy 06G-150 with the screws 06G-170 and the nuts 06G-180 to the angle 06G-160.

(j) Attach the studs 06G-230 and the washers 06G-220 to the cover oxygen container assy 06G-150.

(k) Install and assemble the handle assembly 06G-110 as follows:

1 Attach the special screws 06G-120 and the special washers 06G-140 to the aft side wall assembly 06G-010.

2 Attach the handle assembly 06G-110 to the aft side wall assembly 06G-010.

3 Attach the security pins 06G-130 to the handle assembly 06G-110.

SUB TASK 25-41-51-410-035-H01
D2549020604800

8. Installation of the Side Wall (06G-1)

(a) Attach the brackets 06G-013, 06G-017 to the aft side wall assembly 06G-010.

(b) Attach the fittings 06G-020 with the screws 06G-030 to the brackets 06G-013.

(c) Assemble the post assembly 06G-240 as follows:

1 Attach the screws 06G-243.

(d) Attach the post assembly 06G-240 with the screws 06G-250, 06G-270, the washers 06G-220 and the caps 06G-260.

(e) Attach the angles 06G-190 with the screws 06G-210 and the washers 06G-220 to the aft side wall assembly 06G-010.

(f) Attach the oxygen container assy 06G-200 with the screws 06G-210 and the washers 06G-220 to the angles 06G-190.

(g) Attach the ground cable in accordance with the Process and Material Specification PMS 01-04-58 to the oxygen container assy 06G-200.

(h) Attach the angle 06G-160 with the screws 06G-210 and the washers 06G-220 to the aft side wall assembly 06G-010.

(i) Attach the cover oxygen container assy 06G-150 with the screws 06G-170 and the nuts 06G-180 to the angle 06G-160.

(j) Attach the studs 06G-230 and the washers 06G-220 to the cover oxygen container assy 06G-150.

(k) Install and assemble the handle assembly 06G-110 as follows:

1 Attach the special screws 06G-120 and the special washers 06G-140 to the aft side wall assembly 06G-010.

2 Attach the handle assembly 06G-110 to the aft side wall assembly 06G-010.

3 Attach the security pins 06G-130 to the handle assembly 06G-110.

TASK 25-41-51-400-819-J01
D2549010511600 D2549010513400 D2549010513600 D2549020602800 D2549020605000 D2549020605600 D2549020606000 D2549020607400 D2549020608200 D2549020608400 D2549020609400 D2549020610000 D2549020611200 D2549020611800 D2549020709400 D2549030510600 R225401134-000 R225401134-002 R225401134-004 R225401136-016

192. Installation of the Side Wall

A. General

This task gives you the installation and assembly procedures of the component.

B. Job Set-up Information
(1) Consumable Materials

REFERENCE	DESIGNATION
08-007	Sealant, High Temperature

Table 7023
Consumable Materials

C. Procedure

WARNING: **BE CAREFUL WHEN YOU USE SOLVENTS/CLEANING AGENTS, SEALANTS AND OTHER MATERIALS. OBEY THE MATERIAL MANUFACTURER'S INSTRUCTIONS AND THE LOCAL REGULATIONS. MAKE SURE THAT THERE IS A GOOD FLOW OF AIR THROUGH THE WORK AREA. DO NOT BREATHE THE FUMES. DO NOT SMOKE. DO NOT USE THESE MATERIALS NEAR A FLAME, SPARKS OR SOURCES OF HEAT. USE PROTECTIVE CLOTHING, GOGGLES AND GLOVES. IF YOU GET ONE OF THESE MATERIALS ON YOUR SKIN OR IN YOUR EYES, FLUSH IT AWAY WITH A FLOW OF CLEAN WATER. IF YOU GET ONE OF THESE MATERIALS IN YOUR MOUTH, GET IMMEDIATE MEDICAL AID. IN GENERAL, THESE MATERIALS ARE POISONOUS, FLAMMABLE AND SKIN IRRITANTS.**

WARNING: **KEEP ALL HYDROCARBONS (FUELS, LUBRICANTS, ETC.) AWAY FROM ALL SOURCES OF OXYGEN. OXYGEN BECOMES EXPLOSIVE WHEN IT TOUCHES HYDROCARBONS.**

WARNING: **TO PREVENT CONTAMINATION OF THE OXYGEN SYSTEM, MAKE SURE THAT YOUR HANDS AND ALL THE TOOLS ARE CLEAN.**

CAUTION: **DO ALL THE WORK ON A CLEAN, SOFT SURFACE TO PREVENT DAMAGE TO THE COMPONENTS.**

CAUTION: **MAKE SURE THAT ALL THE PARTS ARE CLEAN BEFORE YOU ASSEMBLE THEM.**

SUB TASK 25-41-51-410-036-A01
D2549020606000

1. Installation of the Side Wall (06H-1)

   (a) Attach the brackets 06H-013, 06H-017 to the aft side wall assembly 06H-010.

   (b) Attach the fittings 06H-020 with the screws 06H-030 to the brackets 06H-013.

   (c) Assemble the post assembly 06H-240 as follows:

      1 Attach the screws 06H-243.

   (d) Attach the post assembly 06H-240 with the screws 06H-250, 06H-270, the washers 06H-220 and the caps 06H-260.

   (e) Assemble the single door emergency unlocking device assembly 06H-430 as follows:

      WARNING: **BE CAREFUL WHEN YOU USE MATERIAL NO. 08-007 SEALANT, HIGH TEMPERATURE. OBEY THE MATERIAL MANUFACTURER'S INSTRUCTIONS.**

      1 Apply the Material No. 08-007 Sealant, High Temperature to the snap catch 06H-480 and to the pin 06H-470 and attach the emergency unlocking-device pivot 06H-460, the snap catch 06H-480 and the pin 06H-470 to the emergency unlocking-device housing 06H-440.

      NOTE: **Adjust the snap catch 06H-480 a half turn before stop.**

      WARNING: **BE CAREFUL WHEN YOU USE MATERIAL NO. 08-007 SEALANT, HIGH TEMPERATURE. OBEY THE MATERIAL MANUFACTURER'S INSTRUCTIONS.**

      2 Apply the Material No. 08-007 Sealant, High Temperature to the bolt 06H-490 and attach the emergency unlocking-device strike 06H-450 with the bolt 06H-490 to the emergency unlocking-device housing 06H-440.

   (f) Attach the single door emergency unlocking device assembly 06H-430 and the plates 06H-500 with the screws 06H-510 and the nuts 06H-520 to the post assembly 06H-240.

(g) Attach the angles 06H-190 with the screws 06H-210 and the washers 06H-220 to the aft side wall assembly 06H-010.

(h) Attach the oxygen container assy 06H-200 with the screws 06H-210 and the washers 06H-220 to the angles 06H-190.

(i) Attach the ground cable in accordance with the Process and Material Specification PMS 01-04-58 to the oxygen container assy 06H-200.

(j) Attach the angle 06H-160 with the screws 06H-210 and the washers 06H-220 to the aft side wall assembly 06H-010.

(k) Attach the cover oxygen container assy 06H-150 with the screws 06H-170 and the nuts 06H-180 to the angle 06H-160.

(l) Attach the studs 06H-230 and the washers 06H-220 to the cover oxygen container assy 06H-150.

(m) Attach the screws 06H-290 to the aft side wall assembly 06H-010.

(n) Attach the toilet seat cover dispenser 06H-280 to the screws 06H-290.

(o) Install and assemble the handle assembly 06H-110 as follows:

1 Attach the special screws 06H-120 and the special washers 06H-140 to the aft side wall assembly 06H-010.

2 Attach the handle assembly 06H-110 to the aft side wall assembly 06H-010.

3 Attach the security pins 06H-130 to the handle assembly 06H-110.

SUB TASK 25-41-51-410-036-B01
D2549020709400

2. Installation of the Side Wall (06H-1)

(a) Attach the brackets 06H-013, 06H-017 to the aft side wall assembly 06H-010.

(b) Attach the fittings 06H-020 with the screws 06H-030 to the brackets 06H-013.

(c) Assemble the retainer space 06H-240 as follows:

1 Attach the screws 06H-243.

(d) Attach the retainer space 06H-240 with the screws 06H-250, 06H-270, the washers 06H-220 and the caps 06H-260.

(e) Assemble the single door emergency unlocking device assembly 06H-430 as follows:

WARNING: BE CAREFUL WHEN YOU USE MATERIAL NO. 08-007 SEALANT, HIGH TEMPERATURE. OBEY THE MATERIAL MANUFACTURER'S INSTRUCTIONS.

1 Apply the Material No. 08-007 Sealant, High Temperature to the snap catch 06H-480 and to the pin 06H-470 and attach the emergency unlocking-device pivot 06H-460, the snap catch 06H-480 and the pin 06H-470 to the emergency unlocking-device housing 06H-440.

NOTE: Adjust the snap catch 06H-480 a half turn before stop.

WARNING: BE CAREFUL WHEN YOU USE MATERIAL NO. 08-007 SEALANT, HIGH TEMPERATURE. OBEY THE MATERIAL MANUFACTURER'S INSTRUCTIONS.

2 Apply the Material No. 08-007 Sealant, High Temperature to the bolt 06H-490 and attach the emergency unlocking-device strike 06H-450 with the bolt 06H-490 to the emergency unlocking-device housing 06H-440.

(f) Attach the single door emergency unlocking device assembly 06H-430 and the plates 06H-500 with the screws 06H-510 and the nuts 06H-520 to the retainer space 06H-240.

(g) Attach the angles 06H-190 with the screws 06H-210 and the washers 06H-220 to the aft side wall assembly 06H-010.

(h) Attach the oxygen container assy 06H-200 with the screws 06H-210 and the washers 06H-220 to the angles 06H-190.

(i) Attach the ground cable in accordance with the Process and Material Specification PMS 01-04-58 to the oxygen container assy 06H-200.

(j) Attach the angle 06H-160 with the screws 06H-210 and the washers 06H-220 to the aft side wall assembly 06H-010.

(k) Attach the cover oxygen container assy 06H-150 with the screws 06H-170 and the nuts 06H-180 to the angle 06H-160.

(l) Attach the studs 06H-230 and the washers 06H-220 to cover oxygen container assy 06H-150.

(m) Attach the screws 06H-290 to the aft side wall assembly 06H-010.

(n) Attach the toilet seat cover dispenser 06H-280 to the screws 06H-290.

(o) Attach the support 06H-340 with the screws 06H-350 and the washers 06H-360 to the aft side wall assembly 06H-010.

(p) Install and assemble the handle assembly 06H-300 as follows:

1 Attach the special screws 06H-310 and the special washers 06H-330 to the aft side wall assembly 06H-010.

2 Attach the handle assembly 06H-300 to the aft side wall assembly 06H-010.

3 Attach the security pins 06H-320 to the handle assembly 06H-300.

SUB TASK 25-41-51-410-036-C01
D2549030510600

3. Installation of the Side Wall (06H-1)

(a) Attach the brackets 06H-013, 06H-017 to the aft side wall assembly 06H-010.

(b) Attach the fittings 06H-020 with the screws 06H-030 to the brackets 06H-013.

(c) Assemble the retainer space 06H-240 as follows:

1 Attach the screws 06H-243.

(d) Attach the retainer space 06H-240 with the screws 06H-250, 06H-270, the washers 06H-220 and the caps 06H-260.

(e) Assemble the single door emergency unlocking device assembly 06H-430 as follows:

WARNING: **BE CAREFUL WHEN YOU USE MATERIAL NO. 08-007 SEALANT, HIGH TEMPERATURE. OBEY THE MATERIAL MANUFACTURER'S INSTRUCTIONS.**

1 Apply the Material No. 08-007 Sealant, High Temperature to the snap catch 06H-480 and to the pin 06H-470 and attach the emergency unlocking-device pivot 06H-460, the snap catch 06H-480 and the pin 06H-470 to the emergency unlocking-device housing 06H-440.

NOTE: **Adjust the snap catch 06H-480 a half turn before stop.**

WARNING: **BE CAREFUL WHEN YOU USE MATERIAL NO. 08-007 SEALANT, HIGH TEMPERATURE. OBEY THE MATERIAL MANUFACTURER'S INSTRUCTIONS.**

2 Apply the Material No. 08-007 Sealant, High Temperature to the bolt 06H-490 and attach the emergency unlocking-device strike 06H-450 with the bolt 06H-490 to the emergency unlocking-device housing 06H-440.

(f) Attach the single door emergency unlocking device assembly 06H-430 and the plates 06H-500 with the screws 06H-510 and the nuts 06H-520 to the retainer space 06H-240.

(g) Attach the angles 06H-190 with the screws 06H-210 and the washers 06H-220 to the aft side wall assembly 06H-010.

(h) Attach the oxygen container assy 06H-200 with the screws 06H-210 and the washers 06H-220 to the angles 06H-190.

(i) Attach the ground cable in accordance with the Process and Material Specification PMS 01-04-58 to the oxygen container assy 06H-200.

(j) Attach the angle 06H-160 with the screws 06H-210 and the washers 06H-220 to the aft side wall assembly 06H-010.

(k) Attach the cover oxygen container assy 06H-150 with the screws 06H-170 and the nuts 06H-180 to the angle 06H-160.

(l) Attach the studs 06H-230 and the washers 06H-220 to the cover oxygen container assy 06H-150.

(m) Attach the support 06H-340 with the screws 06H-350 and the washers 06H-360 to the aft side wall assembly 06H-010.

(n) Install and assemble the handle assembly 06H-300 as follows:

1 Attach the special screws 06H-310 and the special washers 06H-330 to the aft side wall assembly 06H-010.

2 Attach the handle assembly 06H-300 to the aft side wall assembly 06H-010.

3 Attach the security pins 06H-320 to the handle assembly 06H-300.

SUB TASK 25-41-51-410-036-D01
D2549020605000 D2549020608400 R225401136-016

4. Installation of the Side Wall (06H-1)

(a) Attach the brackets 06H-013, 06H-017 to the aft side wall assembly 06H-010.

(b) Attach the fittings 06H-020 with the screws 06H-030 to the brackets 06H-013.

(c) Assemble the post assembly 06H-240 as follows:

1 Attach the screws 06H-243.

(d) Attach the post assembly 06H-240 with the screws 06H-250, 06H-270, the washers 06H-220 and the caps 06H-260.

(e) Attach the angles 06H-190 with the screws 06H-210 and the washers 06H-220 to the aft side wall assembly 06H-010.

(f) Attach the oxygen container assy 06H-200 with the screws 06H-210, 06H-215 and the washers 06H-220 to the angles 06H-190.

(g) Attach the ground cable in accordance with the Process and Material Specification PMS 01-04-58 to the oxygen container assy 06H-200.

(h) Attach the angle 06H-160 with the screws 06H-210 and the washers 06H-220 to the aft side wall assembly 06H-010.

(i) Attach the cover oxygen container assy 06H-150 with the screws 06H-170 and the nuts 06H-180 to the angle 06H-160.

(j) Attach the studs 06H-230 and the washers 06H-220 to the cover oxygen container assy 06H-150.

(k) Install and assemble the handle assembly 06H-380 as follows:

1 Attach the special screws 06H-390 and the special washers 06H-410 to the aft side wall assembly 06H-010.

2 Attach the handle assembly 06H-380 to the aft side wall assembly 06H-010.

3 Attach the security pins 06H-400 to the handle assembly 06H-380.

(l) Install and assemble the handle assembly 06H-110 as follows:

1 Attach the special screws 06H-120 and the special washers 06H-140 to the aft side wall assembly 06H-010.

2 Attach the handle assembly 06H-110 to the aft side wall assembly 06H-010.

3 Attach the security pins 06H-130 to the handle assembly 06H-110.

SUB TASK 25-41-51-410-036-E01
D2549010513600

5. Installation of the Side Wall (06H-1)

(a) Attach the brackets 06H-013, 06H-017 to the aft side wall assembly 06H-010.

(b) Attach the fittings 06H-020 with the screws 06H-030 to the brackets 06H-013.

(c) Assemble the post assembly 06H-240 as follows:

1 Attach the screws 06H-243.

(d) Attach the post assembly 06H-240 with the screws 06H-250, 06H-270, the washers 06H-220 and the caps 06H-260.

(e) Attach the angles 06H-190 with the screws 06H-210 and the washers 06H-220 to the aft side wall assembly 06H-010.

(f) Attach the oxygen container assy 06H-200 with the screws 06H-210 and the washers 06H-220 to the angles 06H-190.

(g) Attach the ground cable in accordance with the Process and Material Specification PMS 01-04-58 to the oxygen container assy 06H-200.

(h) Attach the angle 06H-160 with the screws 06H-210 and the washers 06H-220 to the aft side wall assembly 06H-010.

(i) Attach the cover oxygen container assy 06H-150 with the screws 06H-170 and the nuts 06H-180 to the angle 06H-160.

(j) Attach the studs 06H-230 and the washers 06H-220 to the cover oxygen container assy 06H-150.

(k) Attach the screws 06H-290 to the aft side wall assembly 06H-010.

(l) Attach the toilet seat cover dispenser 06H-280 to the screws 06H-290.

(m) Install and assemble the handle assembly 06H-380 as follows:

1 Attach the special screws 06H-390 and the special washers 06H-410 to the aft side wall assembly 06H-010.

2 Attach the handle assembly 06H-380 to the aft side wall assembly 06H-010.

3 Attach the security pins 06H-400 to the handle assembly 06H-380.

(n) Install and assemble the handle assembly 06H-110 as follows:

1 Attach the special screws 06H-120 and the special washers 06H-140 to the aft side wall assembly 06H-010.

2 Attach the handle assembly 06H-110 to the aft side wall assembly 06H-010.

3 Attach the security pins 06H-130 to the handle assembly 06H-110.

SUB TASK 25-41-51-410-036-F01
D2549020610000

6. Installation of the Side Wall (06H-1)

(a) Attach the brackets 06H-013, 06H-017 to the aft side wall assembly 06H-010.

(b) Attach the fittings 06H-020 with the screws 06H-030 to the brackets 06H-013.

(c) Assemble the post assembly 06H-240 as follows:

1 Attach the screws 06H-243.

(d) Attach the post assembly 06H-240 with the screws 06H-250, 06H-270, the washers 06H-220 and the caps 06H-260.

(e) Attach the angles 06H-190 with the screws 06H-210 and the washers 06H-220 to the aft side wall assembly 06H-010.

(f) Attach the oxygen container assy 06H-200 with the screws 06H-210 and the washers 06H-220 to the angles 06H-190.

(g) Attach the ground cable in accordance with the Process and Material Specification PMS 01-04-58 to the oxygen container assy 06H-200.

(h) Attach the angle 06H-160 with the screws 06H-210 and the washers 06H-220 to the aft side wall assembly 06H-010.

(i) Attach the cover oxygen container assy 06H-150 with the screws 06H-170 and the nuts 06H-180 to the angle 06H-160.

(j) Attach the studs 06H-230 and the washers 06H-220 to the cover oxygen container assy 06H-150.

(k) Attach the support 06H-340 with the screws 06H-350 and the washers 06H-360 to the aft side wall assembly 06H-010.

(l) Install and assemble the handle assembly 06H-300 as follows:

1 Attach the special screws 06H-310 and the special washers 06H-330 to the aft side wall assembly 06H-010.

2 Attach the handle assembly 06H-300 to the aft side wall assembly 06H-010.

3 Attach the security pins 06H-320 to the handle assembly 06H-300.

SUB TASK 25-41-51-410-036-G01
D2549020602800 D2549020605600 D2549020608200 R225401134-000 R225401134-002 R225401134-004

7. Installation of the Side Wall (06H-1)

(a) Attach the brackets 06H-013, 06H-017 to the aft side wall assembly 06H-010.

(b) Attach the fittings 06H-020 with the screws 06H-030 to the brackets 06H-013.

(c) Assemble the post assembly 06H-240 as follows:

1 Attach the screws 06H-243.

(d) Attach the post assembly 06H-240 with the screws 06H-250, 06H-270, the washers 06H-220 and the caps 06H-260.

(e) Attach the angles 06H-190 with the screws 06H-210 and the washers 06H-220 to the aft side wall assembly 06H-010.

(f) Attach the oxygen container assy 06H-200 with the screws 06H-210, 06H-215 and the washers 06H-220 to the angles 06H-190.

(g) Attach the ground cable in accordance with the Process and Material Specification PMS 01-04-58 to the oxygen container assy 06H-200.

(h) Attach the angle 06H-160 with the screws 06H-210 and the washers 06H-220 to the aft side wall assembly 06H-010.

(i) Attach the cover oxygen container assy 06H-150 with the screws 06H-170 and the nuts 06H-180 to the angle 06H-160.

(j) Attach the studs 06H-230 and the washers 06H-220 to the cover oxygen container assy 06H-150.

(k) Attach the screws 06H-290 to the aft side wall assembly 06H-010.

(l) Attach the toilet seat cover dispenser 06H-280 to the screws 06H-290.

(m) Attach the support 06H-340 with the screws 06H-350 and the washers 06H-360 to the aft side wall assembly 06H-010.

(n) Install and assemble the handle assembly 06H-300 as follows:

1 Attach the special screws 06H-310 and the special washers 06H-330 to the aft side wall assembly 06H-010.

2 Attach the handle assembly 06H-300 to the aft side wall assembly 06H-010.

3 Attach the security pins 06H-320 to the handle assembly 06H-300.

SUB TASK 25-41-51-410-036-H01
D2549010513400 D2549020609400

8. Installation of the Side Wall (06H-1)

(a) Attach the brackets 06H-013, 06H-017 to the aft side wall assembly 06H-010.

(b) Attach the fittings 06H-020 with the screws 06H-030 to the brackets 06H-013.

(c) Assemble the post assembly 06H-240 as follows:

1 Attach the screws 06H-243.

(d) Attach the post assembly 06H-240 with the screws 06H-250, 06H-270, the washers 06H-220 and the caps 06H-260.

(e) Attach the angles 06H-190 with the screws 06H-210 and the washers 06H-220 to the aft side wall assembly 06H-010.

(f) Attach the oxygen container assy 06H-200 with the screws 06H-210 and the washers 06H-220 to the angles 06H-190.

(g) Attach the ground cable in accordance with the Process and Material Specification PMS 01-04-58 to the oxygen container assy 06H-200.

(h) Attach the angle 06H-160 with the screws 06H-210 and the washers 06H-220 to the aft side wall assembly 06H-010.

(i) Attach the cover oxygen container assy 06H-150 with the screws 06H-170 and the nuts 06H-180 to the angle 06H-160.

(j) Attach the studs 06H-230 and the washers 06H-220 to the cover oxygen container assy 06H-150.

(k) Attach the screws 06H-290 to the aft side wall assembly 06H-010.

(l) Attach the toilet seat cover dispenser 06H-280 to the screws 06H-290.

(m) Install and assemble the handle assembly 06H-300 as follows:

1 Attach the special screws 06H-310 and the special washers 06H-330 to the aft side wall assembly 06H-010.

2 Attach the handle assembly 06H-300 to the aft side wall assembly 06H-010.

3 Attach the security pins 06H-320 to the handle assembly 06H-300.

SUB TASK 25-41-51-410-036-J01
D2549020607400

9. Installation of the Side Wall (06H-1)

(a) Attach the brackets 06H-013, 06H-017 to the aft side wall assembly 06H-010.

(b) Attach the fittings 06H-020 with the screws 06H-030 to the brackets 06H-013.

(c) Assemble the post assembly 06H-240 as follows:

1 Attach the screws 06H-243.

(d) Attach the post assembly 06H-240 with the screws 06H-250, 06H-270, the washers 06H-220 and the caps 06H-260.

(e) Attach the angles 06H-190 with the screws 06H-210 and the washers 06H-220 to the aft side wall assembly 06H-010.

(f) Attach the oxygen container assy 06H-200 with the screws 06H-210 and the washers 06H-220 to the angles 06H-190.

(g) Attach the ground cable in accordance with the Process and Material Specification PMS 01-04-58 to the oxygen container assy 06H-200.

(h) Attach the angle 06H-160 with the screws 06H-210 and the washers 06H-220 to the aft side wall assembly 06H-010.

(i) Attach the cover oxygen container assy 06H-150 with the screws 06H-170 and the nuts 06H-180 to the angle 06H-160.

(j) Attach the studs 06H-230 and the washers 06H-220 to the cover oxygen container assy 06H-150.

(k) Install and assemble the handle assembly 06H-300 as follows:

1 Attach the special screws 06H-310 and the special washers 06H-330 to the aft side wall assembly 06H-010.

2 Attach the handle assembly 06H-300 to the aft side wall assembly 06H-010.

3 Attach the security pins 06H-320 to the handle assembly 06H-300.

SUB TASK 25-41-51-410-036-K01
D2549020611800

10. Installation of the Side Wall (06H-1)

(a) Attach the brackets 06H-013, 06H-017 to the aft side wall assembly 06H-010.

(b) Attach the fittings 06H-020 with the screws 06H-030 to the brackets 06H-013.

(c) Assemble the post assembly 06H-240 as follows:

1 Attach the screws 06H-243.

(d) Attach the post assembly 06H-240 with the screws 06H-250, 06H-270, the washers 06H-220 and the caps 06H-260.

(e) Attach the angles 06H-190 with the screws 06H-210 and the washers 06H-220 to the aft side wall assembly 06H-010.

(f) Attach the oxygen container assy 06H-200 with the screws 06H-210 and the washers 06H-220 to the angles 06H-190.

(g) Attach the ground cable in accordance with the Process and Material Specification PMS 01-04-58 to the oxygen container assy 06H-200.

(h) Attach the angle 06H-160 with the screws 06H-210 and the washers 06H-220 to the aft side wall assembly 06H-010.

(i) Attach the cover oxygen container assy 06H-150 with the screws 06H-170 and the nuts 06H-180 to the angle 06H-160.

(j) Attach the studs 06H-230 and the washers 06H-220 to the cover oxygen container assy 06H-150.

(k) Attach the screws 06H-290 to the aft side wall assembly 06H-010.

(l) Attach the toilet seat cover dispenser 06H-280 to the screws 06H-290.

(m) Install and assemble the handle assembly 06H-110 as follows:

1 Attach the special screws 06H-120 and the special washers 06H-140 to the aft side wall assembly 06H-010.

2 Attach the handle assembly 06H-110 to the aft side wall assembly 06H-010.

3 Attach the security pins 06H-130 to the handle assembly 06H-110.

SUB TASK 25-41-51-410-036-L01
D2549010511600 D2549020611200

11. Installation of the Side Wall (06H-1)

(a) Attach the brackets 06H-013, 06H-017 to the aft side wall assembly 06H-010.

(b) Attach the fittings 06H-020 with the screws 06H-030 to the brackets 06H-013.

(c) Assemble the post assembly 06H-240 as follows:

1 Attach the screws 06H-243.

(d) Attach the post assembly 06H-240 with the screws 06H-250, 06H-270, the washers 06H-220 and the caps 06H-260.

(e) Attach the angles 06H-190 with the screws 06H-210 and the washers 06H-220 to the aft side wall assembly 06H-010.

(f) Attach the oxygen container assy 06H-200 with the screws 06H-210 and the washers 06H-220 to the angles 06H-190.

(g) Attach the ground cable in accordance with the Process and Material Specification PMS 01-04-58 to the oxygen container assy 06H-200.

(h) Attach the angle 06H-160 with the screws 06H-210 and the washers 06H-220 to the aft side wall assembly 06H-010.

(i) Attach the cover oxygen container assy 06H-150 with the screws 06H-170 and the nuts 06H-180 to the angle 06H-160.

(j) Attach the studs 06H-230 and the washers 06H-220 to the cover oxygen container assy 06H-150.

(k) Attach the screws 06H-290 to the aft side wall assembly 06H-010.

(l) Attach the toilet seat cover dispenser 06H-280 to the screws 06H-290.

(m) Install and assemble the handle assembly 06H-110 as follows:

1 Attach the special screws 06H-120 and the special washers 06H-140 to the aft side wall assembly 06H-010.

2 Attach the handle assembly 06H-110 to the aft side wall assembly 06H-010.

3 Attach the security pins 06H-130 to the handle assembly 06H-110.

TASK 25-41-51-400-819-K01
D2549010511800 D2549010512400 D2549010513000 D2549010513800 D2549020506400 D2549020607800 D2549020609800 D2549020610200 D2549020611000 D2549020611400 D2549020611600 D2549030506400 D2549030506600 D2549030507200 R225401137-002 R225401175-000 R225401176-000

193. Installation of the Side Wall

A. General

This task gives you the installation and assembly procedures of the component.

B. Job Set-up Information
(1) Consumable Materials

REFERENCE	DESIGNATION
08-007	Sealant, High Temperature

Table 7024
Consumable Materials

C. Procedure

WARNING: **BE CAREFUL WHEN YOU USE SOLVENTS/CLEANING AGENTS, SEALANTS AND OTHER MATERIALS. OBEY THE MATERIAL MANUFACTURER'S INSTRUCTIONS AND THE LOCAL REGULATIONS. MAKE SURE THAT THERE IS A GOOD FLOW OF AIR THROUGH THE WORK AREA. DO NOT BREATHE THE FUMES. DO NOT SMOKE. DO NOT USE THESE MATERIALS NEAR A FLAME, SPARKS OR SOURCES OF HEAT. USE PROTECTIVE CLOTHING, GOGGLES AND GLOVES. IF YOU GET ONE OF THESE MATERIALS ON YOUR SKIN OR IN YOUR EYES, FLUSH IT AWAY WITH A FLOW OF CLEAN WATER. IF YOU GET ONE OF THESE MATERIALS IN YOUR MOUTH, GET IMMEDIATE MEDICAL AID. IN GENERAL, THESE MATERIALS ARE POISONOUS, FLAMMABLE AND SKIN IRRITANTS.**

WARNING: **KEEP ALL HYDROCARBONS (FUELS, LUBRICANTS, ETC.) AWAY FROM ALL SOURCES OF OXYGEN. OXYGEN BECOMES EXPLOSIVE WHEN IT TOUCHES HYDROCARBONS.**

WARNING: **TO PREVENT CONTAMINATION OF THE OXYGEN SYSTEM, MAKE SURE THAT YOUR HANDS AND ALL THE TOOLS ARE CLEAN.**

CAUTION: **DO ALL THE WORK ON A CLEAN, SOFT SURFACE TO PREVENT DAMAGE TO THE COMPONENTS.**

CAUTION: **MAKE SURE THAT ALL THE PARTS ARE CLEAN BEFORE YOU ASSEMBLE THEM.**

SUB TASK 25-41-51-410-037-A01
D2549020611600

1. Installation of the Side Wall (06J-1)

   (a) Attach the fittings 06J-021, 06J-025 with the screws 06J-031, 06J-035 to the aft side wall assembly 06J-010.

   (b) Assemble the post assembly 06J-250 as follows:

      1 Attach the screws 06J-260.

   (c) Attach the post assembly 06J-250 with the screws 06J-280, the washers 06J-230 and the caps 06J-290.

   (d) Assemble the single door emergency unlocking device assembly 06J-510 as follows:

      WARNING: **BE CAREFUL WHEN YOU USE MATERIAL NO. 08-007 SEALANT, HIGH TEMPERATURE. OBEY THE MATERIAL MANUFACTURER'S INSTRUCTIONS.**

      1 Apply the Material No. 08-007 Sealant, High Temperature to the snap catch 06J-560 and to the pin 06J-550 and attach the emergency unlocking-device pivot 06J-540, the snap catch 06J-560 and the pin 06J-550 to the emergency unlocking-device housing 06J-520.

      NOTE: **Adjust the snap catch 06J-560 a half turn before stop.**

      WARNING: **BE CAREFUL WHEN YOU USE MATERIAL NO. 08-007 SEALANT, HIGH TEMPERATURE. OBEY THE MATERIAL MANUFACTURER'S INSTRUCTIONS.**

      2 Apply the Material No. 08-007 Sealant, High Temperature to the bolt 06J-570 and attach the emergency unlocking-device strike 06J-530 with the bolt 06J-570 to the emergency unlocking-device housing 06J-520.

   (e) Attach the single door emergency unlocking device assembly 06J-510 and the plates 06J-580 with the screws 06J-590 and the nuts 06J-600 to the post assembly 06J-250.

   (f) Attach the angle 06J-480 with the screws 06J-490, 06J-500 and the washers 06J-231 to the aft side wall assembly 06J-010.

(g) Attach the angles 06J-200 with the screws 06J-220 and the washers 06J-230 to the aft side wall assembly 06J-010.

(h) Attach the oxygen container assy 06J-210 with the screws 06J-220 and the washers 06J-230 to the angles 06J-200.

(i) Attach the ground cable in accordance with the Process and Material Specification PMS 01-04-58 to the oxygen container assy 06J-210.

(j) Attach the angle 06J-170 with the screws 06J-220 and the washers 06J-230 to the aft side wall assembly 06J-010.

(k) Attach the cover oxygen container assy 06J-160 with the screws 06J-180 and the nuts 06J-190 to the angle 06J-170.

(l) Attach the studs 06J-240 and the washers 06J-230 to the cover oxygen container assy 06J-160.

(m) Attach the coat hook 06J-370 with the screw 06J-380.

(n) Attach the screws 06J-320 to the aft side wall assembly 06J-010.

(o) Attach the toilet seat cover dispenser 06J-310 to the screws 06J-320.

(p) Install and assemble the handle assembly 06J-120 as follows:

1 Attach the special screws 06J-130 and the special washers 06J-150 to the aft side wall assembly 06J-010.

2 Attach the handle assembly 06J-120 to the aft side wall assembly 06J-010.

3 Attach the security pins 06J-140 to the handle assembly 06J-120.

SUB TASK 25-41-51-410-037-B01
D2549020610200

2. Installation of the Side Wall (06J-1)

(a) Attach the brackets 06J-013, 06J-017 to the aft side wall assembly 06J-010.

(b) Attach the fittings 06J-020 with the screws 06J-030 to the brackets 06J-013.

(c) Assemble the post assembly 06J-250 as follows:

1 Attach the screws 06J-260.

(d) Attach the post assembly 06J-250 with the screws 06J-280, the washers 06J-230 and the caps 06J-290.

(e) Attach the angles 06J-200 with the screws 06J-220 and the washers 06J-230 to the aft side wall assembly 06J-010.

(f) Attach the oxygen container assy 06J-210 with the screws 06J-220 and the washers 06J-230 to the angles 06J-200.

(g) Attach the ground cable in accordance with the Process and Material Specification PMS 01-04-58 to the oxygen container assy 06J-210.

(h) Attach the angle 06J-170 with the screws 06J-220 and the washers 06J-230 to the aft side wall assembly 06J-010.

(i) Attach the cover oxygen container assy 06J-160 with the screws 06J-180 and the nuts 06J-190 to the angle 06J-170.

(j) Attach the studs 06J-240 and the washers 06J-230 to the cover oxygen container assy 06J-160.

(k) Install and assemble the handle assembly 06J-390 as follows:

1 Attach the special screws 06J-400 and the special washers 06J-420 to the aft side wall assembly 06J-010.

2 Attach the handle assembly 06J-390 to the aft side wall assembly 06J-010.

3 Attach the security pins 06J-410 to the handle assembly 06J-390.

(l) Install and assemble the handle assembly 06J-120 as follows:

1 Attach the special screws 06J-130 and the special washers 06J-150 to the aft side wall assembly 06J-010.

2 Attach the handle assembly 06J-120 to the aft side wall assembly 06J-010.

3 Attach the security pins 06J-140 to the handle assembly 06J-120.

SUB TASK 25-41-51-410-037-C01
D2549010511800

3. Installation of the Side Wall (06J-1)

(a) Attach the brackets 06J-013, 06J-017 to the aft side wall assembly 06J-010.

(b) Attach the fittings 06J-020 with the screws 06J-030 to the brackets 06J-013.

(c) Assemble the post assembly 06J-250 as follows:

1 Attach the screws 06J-260.

(d) Attach the post assembly 06J-250 with the screws 06J-280, the washers 06J-230 and the caps 06J-290.

(e) Attach the angles 06J-200 with the screws 06J-220 and the washers 06J-230 to the aft side wall assembly 06J-010.

(f) Attach the oxygen container assy 06J-210 with the screws 06J-220 and the washers 06J-230 to the angles 06J-200.

(g) Attach the ground cable in accordance with the Process and Material Specification PMS 01-04-58 to the oxygen container assy 06J-210.

(h) Attach the angle 06J-170 with the screws 06J-220 and the washers 06J-230 to the aft side wall assembly 06J-010.

(i) Attach the cover oxygen container assy 06J-160 with the screws 06J-180 and the nuts 06J-190 to the angle 06J-170.

(j) Attach the studs 06J-240 and the washers 06J-230 to the cover oxygen container assy 06J-160.

(k) Attach the support 06J-430 with the screws 06J-440 and the washers 06J-450 to the aft side wall assembly 06J-010.

(l) Install and assemble the handle assembly 06J-120 as follows:

1 Attach the special screws 06J-130 and the special washers 06J-150 to the aft side wall assembly 06J-010.

2 Attach the handle assembly 06J-120 to the aft side wall assembly 06J-010.

3 Attach the security pins 06J-140 to the handle assembly 06J-120.

SUB TASK 25-41-51-410-037-D01
D2549010513800 R225401175-000

4. Installation of the Side Wall (06J-1)

(a) Attach the plugs 06J-045.

(b) Attach the brackets 06J-013, 06J-017 to the aft side wall assembly 06J-010.

(c) Attach the fittings 06J-020 with the screws 06J-030 to the brackets 06J-013.

(d) Assemble the post assembly 06J-250 as follows:

1 Attach the screws 06J-260.

(e) Attach the post assembly 06J-250 with the screws 06J-280, the washers 06J-230 and the caps 06J-290.

(f) Attach the angles 06J-200 with the screws 06J-220 and the washers 06J-230 to the aft side wall assembly 06J-010.

(g) Attach the oxygen container assy 06J-210 with the screws 06J-220 and the washers 06J-230 to the angles 06J-200.

(h) Attach the ground cable in accordance with the Process and Material Specification PMS 01-04-58 to the oxygen container assy 06J-210.

(i) Attach the angle 06J-170 with the screws 06J-220 and the washers 06J-230 to the aft side wall assembly 06J-010.

(j) Attach the cover oxygen container assy 06J-160 with the screws 06J-180 and the nuts 06J-190 to the angle 06J-170.

(k) Attach the studs 06J-240 and the washers 06J-230 to the cover oxygen container assy 06J-160.

(l) Attach the screws 06J-320 to the aft side wall assembly 06J-010.

(m) Attach the toilet seat cover dispenser 06J-310 to the screws 06J-320.

(n) Attach the support 06J-430 with the screws 06J-440 and the washers 06J-450 to the aft side wall assembly 06J-010.

(o) Install and assemble the handle assembly 06J-120 as follows:

1 Attach the special screws 06J-130 and the special washers 06J-150 to the aft side wall assembly 06J-010.

2 Attach the handle assembly 06J-120 to the aft side wall assembly 06J-010.

3 Attach the security pins 06J-140 to the handle assembly 06J-120.

SUB TASK 25-41-51-410-037-E01
D2549030506400 D2549030506600 R225401137-002

5. Installation of the Side Wall (06J-1)

(a) Attach the brackets 06J-013, 06J-017 to the aft side wall assembly 06J-010.

(b) Attach the fittings 06J-020 with the screws 06J-030 to the brackets 06J-013.

(c) Assemble the post assembly 06J-250 as follows:

1 Attach the screws 06J-260.

(d) Attach the post assembly 06J-250 with the screws 06J-280, the washers 06J-230 and the caps 06J-290.

(e) Attach the angles 06J-200 with the screws 06J-220 and the washers 06J-230 to the aft side wall assembly 06J-010.

(f) Attach the oxygen container assy 06J-210 with the screws 06J-220 and the washers 06J-230 to the angles 06J-200.

(g) Attach the ground cable in accordance with the Process and Material Specification PMS 01-04-58 to the oxygen container assy 06J-210.

(h) Attach the angle 06J-170 with the screws 06J-220 and the washers 06J-230 to the aft side wall assembly 06J-010.

(i) Attach the cover oxygen container assy 06J-160 with the screws 06J-180 and the nuts 06J-190 to the angle 06J-170.

(j) Attach the studs 06J-240 and the washers 06J-230 to the cover oxygen container assy 06J-160.

(k) Attach the screws 06J-320 to the aft side wall assembly 06J-010.

(l) Attach the toilet seat cover dispenser 06J-310 to the screws 06J-320.

(m) Install and assemble the handle assembly 06J-120 as follows:

1 Attach the special screws 06J-130 and the special washers 06J-150 to the aft side wall assembly 06J-010.

2 Attach the handle assembly 06J-120 to the aft side wall assembly 06J-010.

3 Attach the security pins 06J-140 to the handle assembly 06J-120.

SUB TASK 25-41-51-410-037-F01
D2549010513000

6. Installation of the Side Wall (06J-1)

(a) Attach the brackets 06J-013, 06J-017 to the aft side wall assembly 06J-010.

(b) Attach the fittings 06J-020 with the screws 06J-030 to the brackets 06J-013.

(c) Assemble the post assembly 06J-250 as follows:

1 Attach the screws 06J-260.

(d) Attach the post assembly 06J-250 with the screws 06J-280, the washers 06J-230 and the caps 06J-290.

(e) Attach the angles 06J-200 with the screws 06J-220 and the washers 06J-230 to the aft side wall assembly 06J-010.

(f) Attach the oxygen container assy 06J-210 with the screws 06J-220 and the washers 06J-230 to the angles 06J-200.

(g) Attach the ground cable in accordance with the Process and Material Specification PMS 01-04-58 to the oxygen container assy 06J-210.

(h) Attach the angle 06J-170 with the screws 06J-220 and the washers 06J-230 to the aft side wall assembly 06J-010.

(i) Attach the cover oxygen container assy 06J-160 with the screws 06J-180 and the nuts 06J-190 to the angle 06J-170.

(j) Attach the studs 06J-240 and the washers 06J-230 to the cover oxygen container assy 06J-160.

(k) Attach the screws 06J-320 to the aft side wall assembly 06J-010.

(l) Attach the toilet seat cover dispenser 06J-310 to the screws 06J-320.

(m) Install and assemble the handle assembly 06J-120 as follows:

1 Attach the special screws 06J-130 and the special washers 06J-150 to the aft side wall assembly 06J-010.

2 Attach the handle assembly 06J-120 to the aft side wall assembly 06J-010.

3 Attach the security pins 06J-140 to the handle assembly 06J-120.

SUB TASK 25-41-51-410-037-G01
D2549010512400 D2549020506400 D2549020607800 D2549020609800 D2549020611000 D2549020611400 D2549030507200 R225401176-000

7. Installation of the Side Wall (06J-1)

(a) Attach the brackets 06J-013, 06J-017 to the aft side wall assembly 06J-010.

(b) Attach the fittings 06J-020 with the screws 06J-030 to the brackets 06J-013.

(c) Assemble the post assembly 06J-250 as follows:

1 Attach the screws 06J-260.

(d) Attach the post assembly 06J-250 with the screws 06J-280, the washers 06J-230 and the caps 06J-290.

(e) Attach the angles 06J-200 with the screws 06J-220 and the washers 06J-230 to the aft side wall assembly 06J-010.

(f) Attach the oxygen container assy 06J-210 with the screws 06J-220, 06J-225 and the washers 06J-230 to the angles 06J-200.

(g) Attach the ground cable in accordance with the Process and Material Specification PMS 01-04-58 to the oxygen container assy 06J-210.

(h) Attach the angle 06J-170 with the screws 06J-220 and the washers 06J-230 to the aft side wall assembly 06J-010.

(i) Attach the cover oxygen container assy 06J-160 with the screws 06J-180 and the nuts 06J-190 to the angle 06J-170.

(j) Attach the studs 06J-240 and the washers 06J-230 to the cover oxygen container assy 06J-160.

(k) Install and assemble the handle assembly 06J-120 as follows:

1 Attach the special screws 06J-130 and the special washers 06J-150 to the aft side wall assembly 06J-010.

2 Attach the handle assembly 06J-120 to the aft side wall assembly 06J-010.

3 Attach the security pins 06J-140 to the handle assembly 06J-120.

TASK 25-41-51-400-819-L01

D2549010510600 D2549010512200 D2549010514000 D2549010606000 D2549020508200 D2549020508400 D2549020512800 D2549020604600 D2549020605400 D2549020610800 D2549020612000 D2549020613600 D2549020614800 D2549020702800 D2549020703600 D2549020703800 D2549020704600 D2549020705600 D2549020706800 D2549020709200 D2549020711200 D2549020712200 D2549030504200 D2549030507800 D2549030508200 D2549030508400 D2549030509400 D2549030510000 D2549030602800 D2549030604800 D2549030607000 D2549030610600 R225401134-006 R225401134-008 R225401134-010 R225401134-016 R225401134-020 R225401134-022 R225401134-024 R225401134-026 R225401172-004

194. Installation of the Side Wall

A. General

This task gives you the installation and assembly procedures of the component.

B. Job Set-up Information

(1) Consumable Materials

REFERENCE	DESIGNATION
08-007	Sealant, High Temperature

Table 7025
Consumable Materials

C. Procedure

WARNING: **BE CAREFUL WHEN YOU USE SOLVENTS/CLEANING AGENTS, SEALANTS AND OTHER MATERIALS. OBEY THE MATERIAL MANUFACTURER'S INSTRUCTIONS AND THE LOCAL REGULATIONS. MAKE SURE THAT THERE IS A GOOD FLOW OF AIR THROUGH THE WORK AREA. DO NOT BREATHE THE FUMES. DO NOT SMOKE. DO NOT USE THESE MATERIALS NEAR A FLAME, SPARKS OR SOURCES OF HEAT. USE PROTECTIVE CLOTHING, GOGGLES AND GLOVES. IF YOU GET ONE OF THESE MATERIALS ON YOUR SKIN OR IN YOUR EYES, FLUSH IT AWAY WITH A FLOW OF CLEAN WATER. IF YOU GET ONE OF THESE MATERIALS IN YOUR MOUTH, GET IMMEDIATE MEDICAL AID. IN GENERAL, THESE MATERIALS ARE POISONOUS, FLAMMABLE AND SKIN IRRITANTS.**

WARNING: **KEEP ALL HYDROCARBONS (FUELS, LUBRICANTS, ETC.) AWAY FROM ALL SOURCES OF OXYGEN. OXYGEN BECOMES EXPLOSIVE WHEN IT TOUCHES HYDROCARBONS.**

WARNING: TO PREVENT CONTAMINATION OF THE OXYGEN SYSTEM, MAKE SURE THAT YOUR HANDS AND ALL THE TOOLS ARE CLEAN.

CAUTION: DO ALL THE WORK ON A CLEAN, SOFT SURFACE TO PREVENT DAMAGE TO THE COMPONENTS.

CAUTION: MAKE SURE THAT ALL THE PARTS ARE CLEAN BEFORE YOU ASSEMBLE THEM.

SUB TASK 25-41-51-410-038-A01
D2549020614800 D2549020705600 D2549020709200

1. Installation of the Side Wall (06K-1)

   (a) Attach the brackets 06K-013, 06K-017 to the aft side wall assembly 06K-010.

   (b) Attach the fittings 06K-020 with the screws 06K-030 to the brackets 06K-013.

   (c) Assemble the post assembly 06K-250 as follows:

      1 Attach the screws 06K-253.

   (d) Attach the post assembly 06K-250 with the screws 06K-260, 06K-280, the washers 06K-230 and the caps 06K-270.

   (e) Assemble the single door emergency unlocking device assembly 06K-380 as follows:

      WARNING: BE CAREFUL WHEN YOU USE MATERIAL NO. 08-007 SEALANT, HIGH TEMPERATURE. OBEY THE MATERIAL MANUFACTURER'S INSTRUCTIONS.

      1 Apply the Material No. 08-007 Sealant, High Temperature to the snap catch 06K-430 and to the pin 06K-420 and attach the emergency unlocking-device pivot 06K-410, the snap catch 06K-430 and the pin 06K-420 to the emergency unlocking-device housing 06K-390.

      NOTE: Adjust the snap catch 06K-430 a half turn before stop.

      WARNING: BE CAREFUL WHEN YOU USE MATERIAL NO. 08-007 SEALANT, HIGH TEMPERATURE. OBEY THE MATERIAL MANUFACTURER'S INSTRUCTIONS.

      2 Apply the Material No. 08-007 Sealant, High Temperature to the bolt 06K-440 and attach the emergency unlocking-device strike 06K-400 with the bolt 06K-440 to the emergency unlocking-device housing 06K-390.

(f) Attach the single door emergency unlocking device assembly 06K-380 and the plates 06K-450 with the screws 06K-460 and the nuts 06K-470 to the post assembly 06K-250.

(g) Attach the angles 06K-200 with the screws 06K-220 and the washers 06K-230 to the aft side wall assembly 06K-010.

(h) Attach the oxygen container assy 06K-210 with the screws 06K-220 and the washers 06K-230 to the angles 06K-200.

(i) Attach the ground cable in accordance with the Process and Material Specification PMS 01-04-58 to the oxygen container assy 06K-210.

(j) Attach the angle 06K-170 with the screws 06K-220 and the washers 06K-230 to the aft side wall assembly 06K-010.

(k) Attach the cover oxygen container assy 06K-160 with the screws 06K-180 and the nuts 06K-190 to the angle 06K-170.

(l) Attach the studs 06K-240 and the washers 06K-230 to the cover oxygen container assy 06K-160.

(m) Attach the support 06K-350 with the screws 06K-261 and the washers 06K-231 to the aft side wall assembly 06K-010.

(n) Install and assemble the handle assembly 06K-120 as follows:

1 Attach the special screws 06K-130 and the special washers 06K-150 to the aft side wall assembly 06K-010.

2 Attach the handle assembly 06K-120 to the aft side wall assembly 06K-010.

3 Attach the security pins 06K-140 to the handle assembly 06K-120.

SUB TASK 25-41-51-410-038-B01

D2549020508200 D2549020512800 D2549020613600 D2549030507800 D2549030509400 D2549030602800 D2549030604800 D2549030607000 D2549030610600 R225401134-006 R225401134-008 R225401134-010 R225401134-016 R225401134-020 R225401134-022 R225401134-024 R225401134-026

2. Installation of the Side Wall (06K-1)

(a) Attach the brackets 06K-013, 06K-017 to the aft side wall assembly 06K-010.

(b) Attach the fittings 06K-020 with the screws 06K-030 to the brackets 06K-013.

(c) Assemble the post assembly 06K-250 as follows:

1 Attach the screws 06K-253.

(d) Attach the post assembly 06K-250 with the screws 06K-260, 06K-280, the washers 06K-230 and the caps 06K-270.

(e) Attach the angles 06K-200 with the screws 06K-220 and the washers 06K-230 to the aft side wall assembly 06K-010.

(f) Attach the oxygen container assy 06K-210 with the screws 06K-220, 06K-222 and the washers 06K-230 to the angles 06K-200.

(g) Attach the ground cable in accordance with the Process and Material Specification PMS 01-04-58 to the oxygen container assy 06K-210.

(h) Attach the angle 06K-170 with the screws 06K-220 and the washers 06K-230 to the aft side wall assembly 06K-010.

(i) Attach the cover oxygen container assy 06K-160 with the screws 06K-180 and the nuts 06K-190 to the angle 06K-170.

(j) Attach the studs 06K-240 and the washers 06K-230 to the cover oxygen container assy 06K-160.

(k) Attach the screws 06K-300 to the aft side wall assembly 06K-010.

(l) Attach the toilet seat cover dispenser 06K-290 to the screws 06K-300.

(m) Attach the support 06K-350 with the screws 06K-261 and the washers 06K-231 to the aft side wall assembly 06K-010.

(n) Install and assemble the handle assembly 06K-120 as follows:

1 Attach the special screws 06K-130 and the special washers 06K-150 to the aft side wall assembly 06K-010.

2 Attach the handle assembly 06K-120 to the aft side wall assembly 06K-010.

3 Attach the security pins 06K-140 to the handle assembly 06K-120.

SUB TASK 25-41-51-410-038-C01
D2549030504200

3. Installation of the Side Wall (06K-1)

(a) Attach the brackets 06K-013, 06K-017 to the aft side wall assembly 06K-010.

(b) Attach the fittings 06K-020 with the screws 06K-030 to the brackets 06K-013.

(c) Assemble the post assembly 06K-250 as follows:

1 Attach the screws 06K-253.

(d) Attach the post assembly 06K-250 with the screws 06K-260, 06K-280, the washers 06K-230 and the caps 06K-270.

(e) Attach the angles 06K-200 with the screws 06K-220 and the washers 06K-230 to the aft side wall assembly 06K-010.

(f) Attach the oxygen container assy 06K-210 with the screws 06K-220 and the washers 06K-230 to the angles 06K-200.

(g) Attach the ground cable in accordance with the Process and Material Specification PMS 01-04-58 to the oxygen container assy 06K-210.

(h) Attach the angle 06K-170 with the screws 06K-220 and the washers 06K-230 to the aft side wall assembly 06K-010.

(i) Attach the cover oxygen container assy 06K-160 with the screws 06K-180 and the nuts 06K-190 to the angle 06K-170.

(j) Attach the studs 06K-240 and the washers 06K-230 to the cover oxygen container assy 06K-160.

(k) Attach the support 06K-350 with the screws 06K-261 and the washers 06K-231 to the aft side wall assembly 06K-010.

(l) Install and assemble the handle assembly 06K-120 as follows:

1 Attach the special screws 06K-130 and the special washers 06K-150 to the aft side wall assembly 06K-010.

2 Attach the handle assembly 06K-120 to the aft side wall assembly 06K-010.

3 Attach the security pins 06K-140 to the handle assembly 06K-120.

SUB TASK 25-41-51-410-038-D01
D2549010606000 D2549020508400 D2549020703600 D2549020703800 D2549020706800 D2549020711200 D2549020712200

4. Installation of the Side Wall (06K-1)

(a) Attach the brackets 06K-013, 06K-017 to the aft side wall assembly 06K-010.

(b) Attach the fittings 06K-020 with the screws 06K-030 to the brackets 06K-013.

(c) Assemble the post assembly 06K-250 as follows:

1 Attach the screws 06K-253.

(d) Attach the post assembly 06K-250 with the screws 06K-260, 06K-280, the washers 06K-230 and the caps 06K-270.

(e) Attach the angles 06K-200 with the screws 06K-220 and the washers 06K-230 to the aft side wall assembly 06K-010.

(f) Attach the oxygen container assy 06K-210 with the screws 06K-220 and the washers 06K-230 to the angles 06K-200.

(g) Attach the ground cable in accordance with the Process and Material Specification PMS 01-04-58 to the oxygen container assy 06K-210.

(h) Attach the angle 06K-170 with the screws 06K-220 and the washers 06K-230 to the aft side wall assembly 06K-010.

(i) Attach the cover oxygen container assy 06K-160 with the screws 06K-180 and the nuts 06K-190 to the angle 06K-170.

(j) Attach the studs 06K-240 and the washers 06K-230 to the cover oxygen container assy 06K-160.

(k) Attach the support 06K-350 with the screws 06K-261 and the washers 06K-231 to the aft side wall assembly 06K-010.

(l) Install and assemble the handle assembly 06K-120 as follows:

1 Attach the special screws 06K-130 and the special washers 06K-150 to the aft side wall assembly 06K-010.

2 Attach the handle assembly 06K-120 to the aft side wall assembly 06K-010.

3 Attach the security pins 06K-140 to the handle assembly 06K-120.

SUB TASK 25-41-51-410-038-E01
D2549020605400

5. Installation of the Side Wall (06K-1)

(a) Attach the brackets 06K-013, 06K-017 to the aft side wall assembly 06K-010.

(b) Attach the fittings 06K-020 with the screws 06K-030 to the brackets 06K-013.

(c) Assemble the post assembly 06K-250 as follows:

1 Attach the screws 06K-253.

(d) Attach the post assembly 06K-250 with the screws 06K-260, 06K-280, the washers 06K-230 and the caps 06K-270.

(e) Attach the angles 06K-200 with the screws 06K-220 and the washers 06K-230 to the aft side wall assembly 06K-010.

(f) Attach the oxygen container assy 06K-210 with the screws 06K-220 and the washers 06K-230 to the angles 06K-200.

(g) Attach the ground cable in accordance with the Process and Material Specification PMS 01-04-58 to the oxygen container assy 06K-210.

(h) Attach the angle 06K-170 with the screws 06K-220 and the washers 06K-230 to the aft side wall assembly 06K-010.

(i) Attach the cover oxygen container assy 06K-160 with the screws 06K-180 and the nuts 06K-190 to the angle 06K-170.

(j) Attach the studs 06K-240 and the washers 06K-230 to the cover oxygen container assy 06K-160.

(k) Attach the screws 06K-300 to the aft side wall assembly 06K-010.

(l) Attach the toilet seat cover dispenser 06K-290 to the screws 06K-300.

(m) Install and assemble the handle assembly 06K-120 as follows:

1 Attach the special screws 06K-130 and the special washers 06K-150 to the aft side wall assembly 06K-010.

2 Attach the handle assembly 06K-120 to the aft side wall assembly 06K-010.

3 Attach the security pins 06K-140 to the handle assembly 06K-120.

SUB TASK 25-41-51-410-038-F01
D2549020604600

6. Installation of the Side Wall (06K-1)

(a) Attach the brackets 06K-013, 06K-017 to the aft side wall assembly 06K-010.

(b) Attach the fittings 06K-020 with the screws 06K-030 to the brackets 06K-013.

(c) Assemble the post assembly 06K-250 as follows:

1 Attach the screws 06K-253.

(d) Attach the post assembly 06K-250 with the screws 06K-260, 06K-280, the washers 06K-230 and the caps 06K-270.

(e) Attach the angles 06K-200 with the screws 06K-220 and the washers 06K-230 to the aft side wall assembly 06K-010.

(f) Attach the oxygen container assy 06K-210 with the screws 06K-220 and the washers 06K-230 to the angles 06K-200.

(g) Attach the ground cable in accordance with the Process and Material Specification PMS 01-04-58 to the oxygen container assy 06K-210.

(h) Attach the angle 06K-170 with the screws 06K-220 and the washers 06K-230 to the aft side wall assembly 06K-010.

(i) Attach the cover oxygen container assy 06K-160 with the screws 06K-180 and the nuts 06K-190 to the angle 06K-170.

(j) Attach the studs 06K-240 and the washers 06K-230 to the cover oxygen container assy 06K-160.

(k) Attach the screws 06K-300 to the aft side wall assembly 06K-010.

(l) Attach the toilet seat cover dispenser 06K-290 to the screws 06K-300.

(m) Install and assemble the handle assembly 06K-120 as follows:

1 Attach the special screws 06K-130 and the special washers 06K-150 to the aft side wall assembly 06K-010.

2 Attach the handle assembly 06K-120 to the aft side wall assembly 06K-010.

3 Attach the security pins 06K-140 to the handle assembly 06K-120.

SUB TASK 25-41-51-410-038-G01
D2549030508200 R225401172-004

7. Installation of the Side Wall (06K-1)

(a) Attach the brackets 06K-013, 06K-017 to the aft side wall assembly 06K-010.

(b) Attach the fittings 06K-020 with the screws 06K-030 to the brackets 06K-013.

(c) Assemble the post assembly 06K-250 as follows:

1 Attach the screws 06K-253.

(d) Attach the post assembly 06K-250 with the screws 06K-260, 06K-280, the washers 06K-230 and the caps 06K-270.

(e) Attach the angles 06K-200 with the screws 06K-220 and the washers 06K-230 to the aft side wall assembly 06K-010.

(f) Attach the oxygen container assy 06K-210 with the screws 06K-220, 06K-222 and the washers 06K-230 to the angles 06K-200.

(g) Attach the ground cable in accordance with the Process and Material Specification PMS 01-04-58 to the oxygen container assy 06K-210.

(h) Attach the angle 06K-170 with the screws 06K-220 and the washers 06K-230 to the aft side wall assembly 06K-010.

(i) Attach the cover oxygen container assy 06K-160 with the screws 06K-180 and the nuts 06K-190 to the angle 06K-170.

(j) Attach the studs 06K-240 and the washers 06K-230 to the cover oxygen container assy 06K-160.

(k) Attach the screws 06K-300 to the aft side wall assembly 06K-010.

(l) Attach the toilet seat cover dispenser 06K-290 to the screws 06K-300.

(m) Install and assemble the handle assembly 06K-310 as follows:

1 Attach the special screws 06K-320 and the special washers 06K-340 to the aft side wall assembly 06K-010.

2 Attach the handle assembly 06K-310 to the aft side wall assembly 06K-010.

3 Attach the security pins 06K-330 to the handle assembly 06K-310.

(n) Install and assemble the handle assembly 06K-120 as follows:

1 Attach the special screws 06K-130 and the special washers 06K-150 to the aft side wall assembly 06K-010.

2 Attach the handle assembly 06K-120 to the aft side wall assembly 06K-010.

3 Attach the security pins 06K-140 to the handle assembly 06K-120.

SUB TASK 25-41-51-410-038-H01
D2549010510600 D2549010512200 D2549010514000 D2549020612000
D2549020702800 D2549020704600 D2549030508400 D2549030510000

8. Installation of the Side Wall (06K-1)

(a) Attach the brackets 06K-013, 06K-017 to the aft side wall assembly 06K-010.

(b) Attach the fittings 06K-020 with the screws 06K-030 to the brackets 06K-013.

(c) Assemble the post assembly 06K-250 as follows:

1 Attach the screws 06K-253.

(d) Attach the post assembly 06K-250 with the screws 06K-260, 06K-280, the washers 06K-230 and the caps 06K-270.

(e) Attach the angles 06K-200 with the screws 06K-220 and the washers 06K-230 to the aft side wall assembly 06K-010.

(f) Attach the oxygen container assy 06K-210 with the screws 06K-220 and the washers 06K-230 to the angles 06K-200.

(g) Attach the ground cable in accordance with the Process and Material Specification PMS 01-04-58 to the oxygen container assy 06K-210.

(h) Attach the angle 06K-170 with the screws 06K-220 and the washers 06K-230 to the aft side wall assembly 06K-010.

(i) Attach the cover oxygen container assy 06K-160 with the screws 06K-180 and the nuts 06K-190 to the angle 06K-170.

(j) Attach the studs 06K-240 and the washers 06K-230 to the cover oxygen container assy 06K-160.

(k) Install and assemble the handle assembly 06K-310 as follows:

1 Attach the special screws 06K-320 and the special washers 06K-340 to the aft side wall assembly 06K-010.

2 Attach the handle assembly 06K-310 to the aft side wall assembly 06K-010.

3 Attach the security pins 06K-330 to the handle assembly 06K-310.

(l) Install and assemble the handle assembly 06K-120 as follows:

1 Attach the special screws 06K-130 and the special washers 06K-150 to the aft side wall assembly 06K-010.

2 Attach the handle assembly 06K-120 to the aft side wall assembly 06K-010.

3 Attach the security pins 06K-140 to the handle assembly 06K-120.

SUB TASK 25-41-51-410-038-J01
D2549020610800

9. Installation of the Side Wall (06K-1)

(a) Attach the brackets 06K-013, 06K-017 to the aft side wall assembly 06K-010.

(b) Attach the fittings 06K-020 with the screws 06K-030 to the brackets 06K-013.

(c) Assemble the post assembly 06K-250 as follows:

1 Attach the screws 06K-253.

(d) Attach the post assembly 06K-250 with the screws 06K-260, 06K-280, the washers 06K-230 and the caps 06K-270.

(e) Attach the angle 06K-480 with the screws 06K-500, 06K-510 and the washers 06K-490 to the aft side wall assembly 06K-010.

(f) Attach the angles 06K-200 with the screws 06K-220 and the washers 06K-230 to the aft side wall assembly 06K-010.

(g) Attach the oxygen container assy 06K-210 with the screws 06K-220 and the washers 06K-230 to the angles 06K-200.

(h) Attach the ground cable in accordance with the Process and Material Specification PMS 01-04-58 to the oxygen container assy 06K-210.

(i) Attach the angle 06K-170 with the screws 06K-220 and the washers 06K-230 to the aft side wall assembly 06K-010.

(j) Attach the cover oxygen container assy 06K-160 with the screws 06K-180 and the nuts 06K-190 to the angle 06K-170.

(k) Attach the studs 06K-240 and the washers 06K-230 to the cover oxygen container assy 06K-160.

(l) Attach the screws 06K-300 to the aft side wall assembly 06K-010.

(m) Attach the toilet seat cover dispenser 06K-290 to the screws 06K-300.

(n) Install and assemble the handle assembly 06K-120 as follows:

1 Attach the special screws 06K-130 and the special washers 06K-150 to the aft side wall assembly 06K-010.

2 Attach the handle assembly 06K-120 to the aft side wall assembly 06K-010.

3 Attach the security pins 06K-140 to the handle assembly 06K-120.

TASK 25-41-51-400-819-M01

D2549010514400 D2549010600000 D2549010600200 D2549010600400 D2549020506600 D2549020506800 D2549020514000 D2549020612200 D2549020612600 D2549020614400 D2549020614600 D2549020700000 D2549020700800 D2549020701800 D2549020704000 D2549020705400 D2549020707000 D2549020707400 D2549020708000 D2549020709600 D2549020711000 D2549030507600 D2549030508600 D2549030508800 D2549030509600 D2549030514000 D2549030514400 D2549030601200 D2549030602600 D2549030603400 D2549030605200 D2549030605400 D2549030607600 D2549030611400 R225401175-002

195. Installation of the Side Wall

A. General

This task gives you the installation and assembly procedures of the component.

B. Job Set-up Information

(1) Not applicable

C. Procedure

WARNING: BE CAREFUL WHEN YOU USE SOLVENTS/CLEANING AGENTS, SEALANTS AND OTHER MATERIALS. OBEY THE MATERIAL MANUFACTURER'S INSTRUCTIONS AND THE LOCAL REGULATIONS. MAKE SURE THAT THERE IS A GOOD FLOW OF AIR THROUGH THE WORK AREA. DO NOT BREATHE THE FUMES. DO NOT SMOKE. DO NOT USE THESE MATERIALS NEAR A FLAME, SPARKS OR SOURCES OF HEAT. USE PROTECTIVE CLOTHING, GOGGLES AND GLOVES. IF YOU GET ONE OF THESE MATERIALS ON YOUR SKIN OR IN YOUR EYES, FLUSH IT AWAY WITH A FLOW OF CLEAN WATER. IF YOU GET ONE OF THESE MATERIALS IN YOUR MOUTH, GET IMMEDIATE MEDICAL AID. IN GENERAL, THESE MATERIALS ARE POISONOUS, FLAMMABLE AND SKIN IRRITANTS.

WARNING: KEEP ALL HYDROCARBONS (FUELS, LUBRICANTS, ETC.) AWAY FROM ALL SOURCES OF OXYGEN. OXYGEN BECOMES EXPLOSIVE WHEN IT TOUCHES HYDROCARBONS.

WARNING: TO PREVENT CONTAMINATION OF THE OXYGEN SYSTEM, MAKE SURE THAT YOUR HANDS AND ALL THE TOOLS ARE CLEAN.

CAUTION: DO ALL THE WORK ON A CLEAN, SOFT SURFACE TO PREVENT DAMAGE TO THE COMPONENTS.

CAUTION: MAKE SURE THAT ALL THE PARTS ARE CLEAN BEFORE YOU ASSEMBLE THEM.

SUB TASK 25-41-51-410-039-A01
D2549020612600

1. Installation of the Side Wall (06L-1)

   (a) Attach the brackets 06L-013, 06L-017 to the aft side wall assembly 06L-010.

   (b) Attach the fittings 06L-020 with the screws 06L-030 to the brackets 06L-013.

   (c) Assemble the post assembly 06L-250 as follows:

      1 Attach the screws 06L-260.

   (d) Attach the post assembly 06L-250 with the screws 06L-280, 06L-300, the washers 06L-230 and the caps 06L-290.

   (e) Attach the angles 06L-200 with the screws 06L-220 and the washers 06L-230 to the aft side wall assembly 06L-010.

   (f) Attach the oxygen container assy 06L-210 with the screws 06L-220 and the washers 06L-230 to the angles 06L-200.

   (g) Attach the ground cable in accordance with the Process and Material Specification PMS 01-04-58 to the oxygen container assy 06L-210.

   (h) Attach the angle 06L-170 with the screws 06L-220 and the washers 06L-230 to the aft side wall assembly 06L-010.

   (i) Attach the cover oxygen container assy 06L-160 with the screws 06L-180 and the nuts 06L-190 to the angle 06L-170.

   (j) Attach the studs 06L-240 and the washers 06L-230 to the cover oxygen container assy 06L-160.

   (k) Attach the coat hook 06L-380 with the screw 06L-390.

   (l) Attach the screws 06L-330 to the aft side wall assembly 06L-010.

   (m) Attach the toilet seat cover dispenser 06L-320 to the screws 06L-330.

   (n) Attach the support 06L-310 with the screws 06L-281 and the washers 06L-231 to the aft side wall assembly 06L-010.

   (o) Install and assemble the handle assembly 06L-120 as follows:

1 Attach the special screws 06L-130 and the special washers 06L-150 to the aft side wall assembly 06L-010.

2 Attach the handle assembly 06L-120 to the aft side wall assembly 06L-010.

3 Attach the security pins 06L-140 to the handle assembly 06L-120.

SUB TASK 25-41-51-410-039-B01
D2549020614600 D2549020707000

2. Installation of the Side Wall (06L-1)

(a) Attach the brackets 06L-013, 06L-017 to the aft side wall assembly 06L-010.

(b) Attach the fittings 06L-020 with the screws 06L-030 to the brackets 06L-013.

(c) Assemble the post assembly 06L-250 as follows:

1 Attach the screws 06L-260.

(d) Attach the post assembly 06L-250 with the screws 06L-280, 06L-300, the washers 06L-230 and the caps 06L-290.

(e) Attach the angles 06L-200 with the screws 06L-220 and the washers 06L-230 to the aft side wall assembly 06L-010.

(f) Attach the oxygen container assy 06L-210 with the screws 06L-220 and the washers 06L-230 to the angles 06L-200.

(g) Attach the ground cable in accordance with the Process and Material Specification PMS 01-04-58 to the oxygen container assy 06L-210.

(h) Attach the angle 06L-170 with the screws 06L-220 and the washers 06L-230 to the aft side wall assembly 06L-010.

(i) Attach the cover oxygen container assy 06L-160 with the screws 06L-180 and the nuts 06L-190 to the angle 06L-170.

(j) Attach the studs 06L-240 and the washers 06L-230 to the cover oxygen container assy 06L-160.

(k) Attach the screws 06L-330 to the aft side wall assembly 06L-010.

(l) Attach the toilet seat cover dispenser 06L-320 to the screws 06L-330.

(m) Install and assemble the handle assemblies 06L-340 as follows:

1 Attach the special screws 06L-350 and the special washers 06L-370 to the aft side wall assembly 06L-010.

2 Attach the handle assemblies 06L-340 to the aft side wall assembly 06L-010.

3 Attach the security pins 06L-360 to the handle assemblies 06L-340.

SUB TASK 25-41-51-410-039-C01
D2549020701800 D2549030508800

3. Installation of the Side Wall (06L-1)

(a) Attach the brackets 06L-013, 06L-017 to the aft side wall assembly 06L-010.

(b) Attach the fittings 06L-020 with the screws 06L-030 to the brackets 06L-013.

(c) Assemble the post assembly 06L-250 as follows:

1 Attach the screws 06L-260.

(d) Attach the post assembly 06L-250 with the screws 06L-280, 06L-300, the washers 06L-230 and the caps 06L-290.

(e) Attach the angles 06L-200 with the screws 06L-220 and the washers 06L-230 to the aft side wall assembly 06L-010.

(f) Attach the oxygen container assy 06L-210 with the screws 06L-220 and the washers 06L-230 to the angles 06L-200.

(g) Attach the ground cable in accordance with the Process and Material Specification PMS 01-04-58 to the oxygen container assy 06L-210.

(h) Attach the angle 06L-170 with the screws 06L-220 and the washers 06L-230 to the aft side wall assembly 06L-010.

(i) Attach the cover oxygen container assy 06L-160 with the screws 06L-180 and the nuts 06L-190 to the angle 06L-170.

(j) Attach the studs 06L-240 and the washers 06L-230 to the cover oxygen container assy 06L-160.

(k) Attach the screws 06L-330 to the aft side wall assembly 06L-010.

(l) Attach the toilet seat cover dispenser 06L-320 to the screws 06L-330.

(m) Install and assemble the handle assemblies 06L-340 as follows:

1 Attach the special screws 06L-350 and the special washers 06L-370 to the aft side wall assembly 06L-010.

2 Attach the handle assemblies 06L-340 to the aft side wall assembly 06L-010.

3 Attach the security pins 06L-360 to the handle assemblies 06L-340.

SUB TASK 25-41-51-410-039-D01
D2549010514400 D2549010600200 D2549030507600 R225401175-002

4. Installation of the Side Wall (06L-1)

(a) Attach the plugs 06L-045.

(b) Attach the brackets 06L-013, 06L-017 to the aft side wall assembly 06L-010.

(c) Attach the fittings 06L-020 with the screws 06L-030 to the brackets 06L-013.

(d) Assemble the post assembly 06L-250 as follows:

1 Attach the screws 06L-260.

(e) Attach the post assembly 06L-250 with the screws 06L-280, 06L-300, the washers 06L-230 and the caps 06L-290.

(f) Attach the angles 06L-200 with the screws 06L-220 and the washers 06L-230 to the aft side wall assembly 06L-010.

(g) Attach the oxygen container assy 06L-210 with the screws 06L-220 and the washers 06L-230 to the angles 06L-200.

(h) Attach the ground cable in accordance with the Process and Material Specification PMS 01-04-58 to the oxygen container assy 06L-210.

(i) Attach the angle 06L-170 with the screws 06L-220 and the washers 06L-230 to the aft side wall assembly 06L-010.

(j) Attach the cover oxygen container assy 06L-160 with the screws 06L-180 and the nuts 06L-190 to the angle 06L-170.

(k) Attach the studs 06L-240 and the washers 06L-230 to the cover oxygen container assy 06L-160.

(l) Attach the screws 06L-330 to the aft side wall assembly 06L-010.

(m) Attach the toilet seat cover dispenser 06L-320 to the screws 06L-330.

(n) Attach the support 06L-310 with the screws 06L-281 and the washers 06L-231 to the aft side wall assembly 06L-010.

(o) Install and assemble the handle assembly 06L-120 as follows:

1 Attach the special screws 06L-130 and the special washers 06L-150 to the aft side wall assembly 06L-010.

2 Attach the handle assembly 06L-120 to the aft side wall assembly 06L-010.

3 Attach the security pins 06L-140 to the handle assembly 06L-120.

SUB TASK 25-41-51-410-039-E01
D2549020514000 D2549020614400 D2549020700800 D2549020704000 D2549020709600 D2549020711000 D2549030509600 D2549030514000 D2549030514400 D2549030601200 D2549030603400 D2549030605200 D2549030605400 D2549030607600 D2549030611400

5. Installation of the Side Wall (06L-1)

(a) Attach the brackets 06L-013, 06L-017 to the aft side wall assembly 06L-010.

(b) Attach the fittings 06L-020 with the screws 06L-030 to the brackets 06L-013.

(c) Assemble the post assembly 06L-250 as follows:

1 Attach the screws 06L-260.

(d) Attach the post assembly 06L-250 with the screws 06L-280, 06L-300, the washers 06L-230 and the caps 06L-290.

(e) Attach the angles 06L-200 with the screws 06L-220 and the washers 06L-230 to the aft side wall assembly 06L-010.

(f) Attach the oxygen container assy 06L-210 with the screws 06L-220 and the washers 06L-230 to the angles 06L-200.

(g) Attach the ground cable in accordance with the Process and Material Specification PMS 01-04-58 to the oxygen container assy 06L-210.

(h) Attach the angle 06L-170 with the screws 06L-220 and the washers 06L-230 to the aft side wall assembly 06L-010.

(i) Attach the cover oxygen container assy 06L-160 with the screws 06L-180 and the nuts 06L-190 to the angle 06L-170.

(j) Attach the studs 06L-240 and the washers 06L-230 to the cover oxygen container assy 06L-160.

(k) Attach the screws 06L-330 to the aft side wall assembly 06L-010.

(l) Attach the toilet seat cover dispenser 06L-320 to the screws 06L-330.

(m) Attach the support 06L-310 with the screws 06L-281 and the washers 06L-231 to the aft side wall assembly 06L-010.

(n) Install and assemble the handle assembly 06L-120 as follows:

1 Attach the special screws 06L-130 and the special washers 06L-150 to the aft side wall assembly 06L-010.

2 Attach the handle assembly 06L-120 to the aft side wall assembly 06L-010.

3 Attach the security pins 06L-140 to the handle assembly 06L-120.

SUB TASK 25-41-51-410-039-F01
D2549020506800

6. Installation of the Side Wall (06L-1)

(a) Attach the brackets 06L-013, 06L-017 to the aft side wall assembly 06L-010.

(b) Attach the fittings 06L-020 with the screws 06L-030 to the brackets 06L-013.

(c) Assemble the post assembly 06L-250 as follows:

1 Attach the screws 06L-260.

(d) Attach the post assembly 06L-250 with the screws 06L-280, 06L-300, the washers 06L-230 and the caps 06L-290.

(e) Attach the angles 06L-200 with the screws 06L-220 and the washers 06L-230 to the aft side wall assembly 06L-010.

(f) Attach the oxygen container assy 06L-210 with the screws 06L-220 and the washers 06L-230 to the angles 06L-200.

(g) Attach the ground cable in accordance with the Process and Material Specification PMS 01-04-58 to the oxygen container assy 06L-210.

(h) Attach the angle 06L-170 with the screws 06L-220 and the washers 06L-230 to the aft side wall assembly 06L-010.

(i) Attach the cover oxygen container assy 06L-160 with the screws 06L-180 and the nuts 06L-190 to the angle 06L-170.

(j) Attach the studs 06L-240 and the washers 06L-230 to the cover oxygen container assy 06L-160.

(k) Attach the support 06L-310 with the screws 06L-281 and the washers 06L-231 to the aft side wall assembly 06L-010.

(l) Install and assemble the handle assembly 06L-120 as follows:

1 Attach the special screws 06L-130 and the special washers 06L-150 to the aft side wall assembly 06L-010.

2 Attach the handle assembly 06L-120 to the aft side wall assembly 06L-010.

3 Attach the security pins 06L-140 to the handle assembly 06L-120.

SUB TASK 25-41-51-410-039-G01
D2549010600000 D2549010600400 D2549020506600

7. Installation of the Side Wall (06L-1)

(a) Attach the brackets 06L-013, 06L-017 to the aft side wall assembly 06L-010.

(b) Attach the fittings 06L-020 with the screws 06L-030 to the brackets 06L-013.

(c) Assemble the post assembly 06L-250 as follows:

1 Attach the screws 06L-260.

(d) Attach the post assembly 06L-250 with the screws 06L-280, 06L-300, the washers 06L-230 and the caps 06L-290.

(e) Attach the angles 06L-200 with the screws 06L-220 and the washers 06L-230 to the aft side wall assembly 06L-010.

(f) Attach the oxygen container assy 06L-210 with the screws 06L-220 and the washers 06L-230 to the angles 06L-200.

(g) Attach the ground cable in accordance with the Process and Material Specification PMS 01-04-58 to the oxygen container assy 06L-210.

(h) Attach the angle 06L-170 with the screws 06L-220 and the washers 06L-230 to the aft side wall assembly 06L-010.

(i) Attach the cover oxygen container assy 06L-160 with the screws 06L-180 and the nuts 06L-190 to the angle 06L-170.

(j) Attach the studs 06L-240 and the washers 06L-230 to the cover oxygen container assy 06L-160.

(k) Attach the support 06L-310 with the screws 06L-281 and the washers 06L-231 to the aft side wall assembly 06L-010.

(l) Install and assemble the handle assembly 06L-120 as follows:

1 Attach the special screws 06L-130 and the special washers 06L-150 to the aft side wall assembly 06L-010.

2 Attach the handle assembly 06L-120 to the aft side wall assembly 06L-010.

3 Attach the security pins 06L-140 to the handle assembly 06L-120.

SUB TASK 25-41-51-410-039-H01
D2549020612200 D2549020700000 D2549020705400 D2549020707400 D2549020708000 D2549030602600

8. Installation of the Side Wall (06L-1)

(a) Attach the brackets 06L-013, 06L-017 to the aft side wall assembly 06L-010.

(b) Attach the fittings 06L-020 with the screws 06L-030 to the brackets 06L-013.

(c) Assemble the post assembly 06L-250 as follows:

1 Attach the screws 06L-260.

(d) Attach the post assembly 06L-250 with the screws 06L-280, 06L-300, the washers 06L-230 and the caps 06L-290.

(e) Attach the angles 06L-200 with the screws 06L-220 and the washers 06L-230 to the aft side wall assembly 06L-010.

(f) Attach the oxygen container assy 06L-210 with the screws 06L-220 and the washers 06L-230 to the angles 06L-200.

(g) Attach the ground cable in accordance with the Process and Material Specification PMS 01-04-58 to the oxygen container assy 06L-210.

(h) Attach the angle 06L-170 with the screws 06L-220 and the washers 06L-230 to the aft side wall assembly 06L-010.

(i) Attach the cover oxygen container assy 06L-160 with the screws 06L-180 and the nuts 06L-190 to the angle 06L-170.

(j) Attach the studs 06L-240 and the washers 06L-230 to the cover oxygen container assy 06L-160.

(k) Install and assemble the handle assemblies 06L-340 as follows:

1 Attach the special screws 06L-350 and the special washers 06L-370 to the aft side wall assembly 06L-010.

2 Attach the handle assemblies 06L-340 to the aft side wall assembly 06L-010.

3 Attach the security pins 06L-360 to the handle assemblies 06L-340.

SUB TASK 25-41-51-410-039-J01
D2549030508600

9. Installation of the Side Wall (06L-1)

(a) Attach the brackets 06L-013, 06L-017 to the aft side wall assembly 06L-010.

(b) Attach the fittings 06L-020 with the screws 06L-030 to the brackets 06L-013.

(c) Assemble the post assembly 06L-250 as follows:

1 Attach the screws 06L-260.

(d) Attach the post assembly 06L-250 with the screws 06L-280, 06L-300, the washers 06L-230 and the caps 06L-290.

(e) Attach the angles 06L-200 with the screws 06L-220 and the washers 06L-230 to the aft side wall assembly 06L-010.

(f) Attach the oxygen container assy 06L-210 with the screws 06L-220 and the washers 06L-230 to the angles 06L-200.

(g) Attach the ground cable in accordance with the Process and Material Specification PMS 01-04-58 to the oxygen container assy 06L-210.

(h) Attach the angle 06L-170 with the screws 06L-220 and the washers 06L-230 to the aft side wall assembly 06L-010.

(i) Attach the cover oxygen container assy 06L-160 with the screws 06L-180 and the nuts 06L-190 to the angle 06L-170.

(j) Attach the studs 06L-240 and the washers 06L-230 to the cover oxygen container assy 06L-160.

(k) Install and assemble the handle assemblies 06L-340 as follows:

1 Attach the special screws 06L-350 and the special washers 06L-370 to the aft side wall assembly 06L-010.

2 Attach the handle assemblies 06L-340 to the aft side wall assembly 06L-010.

3 Attach the security pins 06L-360 to the handle assemblies 06L-340.

TASK 25-41-51-400-819-N01

D2549010514800 D2549010600600 D2549010601200 D2549010602800 D2549010603200 D2549010603800 D2549010604200 D2549010604800 D2549010606400 D2549010607800 D2549020507000 D2549020507200 D2549020508000 D2549020508600 D2549020509000 D2549020509200 D2549020512600 D2549020514200 D2549020514600 D2549020602200 D2549020612400 D2549020613000 D2549020613200 D2549020700200 D2549020701400 D2549020702000 D2549020702400 D2549020703200 D2549020706200 D2549020706600 D2549020708200 D2549020709000 D2549020710200 D2549020710400 D2549020714400 D2549030508000 D2549030509200 D2549030510800 D2549030511400 D2549030511800 D2549030513400 D2549030513600 D2549030600400 D2549030603000 D2549030607200 D2549030608600 R225401136-000 R225401136-010 R225401136-020 R225401136-022 R225401137-004 R225401137-006 R225401137-008 R225401137-012 R225401137-014 R225401153-000 R225401183-000 R225401183-008 R225401600-000 R225401600-002 R225401603-000 R225401619-002

196. Installation of the Side Wall

A. General

This task gives you the installation and assembly procedures of the component.

B. Job Set-up Information
(1) Consumable Materials

REFERENCE	DESIGNATION
08-007	Sealant, High Temperature

Table 7026
Consumable Materials

C. Procedure

WARNING: BE CAREFUL WHEN YOU USE SOLVENTS/CLEANING AGENTS, SEALANTS AND OTHER MATERIALS. OBEY THE MATERIAL MANUFACTURER'S INSTRUCTIONS AND THE LOCAL REGULATIONS. MAKE SURE THAT THERE IS A GOOD FLOW OF AIR THROUGH THE WORK AREA. DO NOT BREATHE THE FUMES. DO NOT SMOKE. DO NOT USE THESE MATERIALS NEAR A FLAME, SPARKS OR SOURCES OF HEAT. USE PROTECTIVE CLOTHING, GOGGLES AND GLOVES. IF YOU GET ONE OF THESE MATERIALS ON YOUR SKIN OR IN YOUR EYES, FLUSH IT AWAY WITH A FLOW OF CLEAN WATER. IF YOU GET ONE OF THESE MATERIALS IN YOUR MOUTH, GET IMMEDIATE MEDICAL AID. IN GENERAL, THESE MATERIALS ARE POISONOUS, FLAMMABLE AND SKIN IRRITANTS.

WARNING: **KEEP ALL HYDROCARBONS (FUELS, LUBRICANTS, ETC.) AWAY FROM ALL SOURCES OF OXYGEN. OXYGEN BECOMES EXPLOSIVE WHEN IT TOUCHES HYDROCARBONS.**

WARNING: **TO PREVENT CONTAMINATION OF THE OXYGEN SYSTEM, MAKE SURE THAT YOUR HANDS AND ALL THE TOOLS ARE CLEAN.**

CAUTION: **DO ALL THE WORK ON A CLEAN, SOFT SURFACE TO PREVENT DAMAGE TO THE COMPONENTS.**

CAUTION: **MAKE SURE THAT ALL THE PARTS ARE CLEAN BEFORE YOU ASSEMBLE THEM.**

SUB TASK 25-41-51-410-040-A01
D2549020613000

1. Installation of the Side Wall (06M-1)

   (a) Attach the fittings 06M-021, 06M-025 with the screws 06M-030, 06M-031, 06M-035 to the aft side wall assembly 06M-010.

   (b) Assemble the post assembly 06M-250 as follows:

      1 Attach the screws 06M-260.

   (c) Attach the post assembly 06M-250 with the screws 06M-280, 06M-300, the washers 06M-230 and the caps 06M-290.

   (d) Assemble the single door emergency unlocking device assembly 06M-410 as follows:

      WARNING: **BE CAREFUL WHEN YOU USE MATERIAL NO. 08-007 SEALANT, HIGH TEMPERATURE. OBEY THE MATERIAL MANUFACTURER'S INSTRUCTIONS.**

      1 Apply the Material No. 08-007 Sealant, High Temperature to the snap catch 06M-460 and to the pin 06M-450 and attach the emergency unlocking-device pivot 06M-440, the snap catch 06M-460 and the pin 06M-450 to the emergency unlocking-device housing 06M-420.

      NOTE: **Adjust the snap catch 06M-460 a half turn before stop.**

WARNING: **BE CAREFUL WHEN YOU USE MATERIAL NO. 08-007 SEALANT, HIGH TEMPERATURE. OBEY THE MATERIAL MANUFACTURER'S INSTRUCTIONS.**

2 Apply the Material No. 08-007 Sealant, High Temperature to the bolt 06M-470 and attach the emergency unlocking-device strike 06M-430 with the bolt 06M-470 to the emergency unlocking-device housing 06M-420.

(e) Attach the single door emergency unlocking device assembly 06M-410 and the plates 06M-480 with the screws 06M-490 and the nuts 06M-500 to the post assembly 06M-250.

(f) Attach the angle 06M-380 with the screws 06M-390, 06M-400 and the washers 06M-233 to the aft side wall assembly 06M-010.

(g) Attach the angles 06M-200 with the screws 06M-220 and the washers 06M-230 to the aft side wall assembly 06M-010.

(h) Attach the oxygen container assy 06M-210 with the screws 06M-220 and the washers 06M-230 to the angles 06M-200.

(i) Attach the ground cable in accordance with the Process and Material Specification PMS 01-04-58 to the oxygen container assy 06M-210.

(j) Attach the angle 06M-170 with the screws 06M-220 and the washers 06M-230 to the aft side wall assembly 06M-010.

(k) Attach the cover oxygen container assy 06M-160 with the screws 06M-180 and the nuts 06M-190 to the angle 06M-170.

(l) Attach the studs 06M-240 and the washers 06M-230 to the cover oxygen container assy 06M-160.

(m) Attach the screws 06M-330 to the aft side wall assembly 06M-010.

(n) Attach the toilet seat cover dispenser 06M-320 to the screws 06M-330.

(o) Install and assemble the handle assemblies 06M-340 as follows:

1 Attach the special screws 06M-350 and the special washers 06M-370 to the aft side wall assembly 06M-010.

2 Attach the handle assemblies 06M-340 to the aft side wall assembly 06M-010.

3 Attach the security pins 06M-360 to the handle assemblies 06M-340.

SUB TASK 25-41-51-410-040-B01
D2549020706200

2. Installation of the Side Wall (06M-1)

(a) Attach the brackets 06M-013, 06M-017 to the aft side wall assembly 06M-010.

(b) Attach the fittings 06M-020 with the screws 06M-030 to the brackets 06M-013.

(c) Assemble the post assembly 06M-250 as follows:

1 Attach the screws 06M-260.

(d) Attach the post assembly 06M-250 with the screws 06M-280, 06M-300, the washers 06M-230 and the caps 06M-290.

(e) Assemble the single door emergency unlocking device assembly 06M-410 as follows:

WARNING: BE CAREFUL WHEN YOU USE MATERIAL NO. 08-007 SEALANT, HIGH TEMPERATURE. OBEY THE MATERIAL MANUFACTURER'S INSTRUCTIONS.

1 Apply the Material No. 08-007 Sealant, High Temperature to the snap catch 06M-460 and to the pin 06M-450 and attach the emergency unlocking-device pivot 06M-440, the snap catch 06M-460 and the pin 06M-450 to the emergency unlocking-device housing 06M-420.

NOTE: Adjust the snap catch 06M-460 a half turn before stop.

WARNING: BE CAREFUL WHEN YOU USE MATERIAL NO. 08-007 SEALANT, HIGH TEMPERATURE. OBEY THE MATERIAL MANUFACTURER'S INSTRUCTIONS.

2 Apply the Material No. 08-007 Sealant, High Temperature to the bolt 06M-470 and attach the emergency unlocking-device strike 06M-430 with the bolt 06M-470 to the emergency unlocking-device housing 06M-420.

(f) Attach the single door emergency unlocking device assembly 06M-410 and the plates 06M-480 with the screws 06M-490 and the nuts 06M-500 to the post assembly 06M-250.

(g) Attach the angles 06M-200 with the screws 06M-220 and the washers 06M-230 to the aft side wall assembly 06M-010.

(h) Attach the oxygen container assy 06M-210 with the screws 06M-220 and the washers 06M-230 to the angles 06M-200.

(i) Attach the ground cable in accordance with the Process and Material Specification PMS 01-04-58 to the oxygen container assy 06M-210.

(j) Attach the angle 06M-170 with the screws 06M-220 and the washers 06M-230 to the aft side wall assembly 06M-010.

(k) Attach the cover oxygen container assy 06M-160 with the screws 06M-180 and the nuts 06M-190 to the angle 06M-170.

(l) Attach the studs 06M-240 and the washers 06M-230 to the cover oxygen container assy 06M-160.

(m) Install and assemble the handle assemblies 06M-340 as follows:

1 Attach the special screws 06M-350 and the special washers 06M-370 to the aft side wall assembly 06M-010.

2 Attach the handle assemblies 06M-340 to the aft side wall assembly 06M-010.

3 Attach the security pins 06M-360 to the handle assemblies 06M-340.

SUB TASK 25-41-51-410-040-C01
D2549010603800 D2549010604200 D2549020702400 D2549020703200 D2549030509200 D2549030513600 R225401137-004 R225401137-006 R225401137-008 R225401137-012 R225401137-014 R225401600-000 R225401600-002

3. Installation of the Side Wall (06M-1)

(a) Attach the brackets 06M-013, 06M-017 to the aft side wall assembly 06M-010.

(b) Attach the fittings 06M-020 with the screws 06M-030 to the brackets 06M-013.

(c) Assemble the post assembly 06M-250 as follows:

1 Attach the screws 06M-260.

(d) Attach the post assembly 06M-250 with the screws 06M-280, 06M-300, the washers 06M-230 and the caps 06M-290.

(e) Attach the angles 06M-200 with the screws 06M-220 and the washers 06M-230 to the aft side wall assembly 06M-010.

(f) Attach the oxygen container assy 06M-210 with the screws 06M-220 and the washers 06M-230 to the angles 06M-200.

(g) Attach the ground cable in accordance with the Process and Material Specification PMS 01-04-58 to the oxygen container assy 06M-210.

(h) Attach the angle 06M-170 with the screws 06M-220 and the washers 06M-230 to the aft side wall assembly 06M-010.

(i) Attach the cover oxygen container assy 06M-160 with the screws 06M-180 and the nuts 06M-190 to the angle 06M-170.

(j) Attach the studs 06M-240 and the washers 06M-230 to the cover oxygen container assy 06M-160.

(k) Attach the screws 06M-330 to the aft side wall assembly 06M-010.

(l) Attach the toilet seat cover dispenser 06M-320 to the screws 06M-330.

(m) Attach the support 06M-310 with the screws 06M-221 and the washers 06M-231 to the aft side wall assembly 06M-010.

(n) Install and assemble the handle assembly 06M-120 as follows:

1 Attach the special screws 06M-130 and the special washers 06M-150 to the aft side wall assembly 06M-010.

2 Attach the handle assembly 06M-120 to the aft side wall assembly 06M-010.

3 Attach the security pins 06M-140 to the handle assembly 06M-120.

SUB TASK 25-41-51-410-040-D01
D2549020509000 D2549020702000 D2549020714400 D2549030511800 D2549030600400 D2549030603000 D2549030607200

4. Installation of the Side Wall (06M-1)

(a) Attach the brackets 06M-013, 06M-017 to the aft side wall assembly 06M-010.

(b) Attach the fittings 06M-020 with the screws 06M-030 to the brackets 06M-013.

(c) Assemble the post assembly 06M-250 as follows:

1 Attach the screws 06M-260.

(d) Attach the post assembly 06M-250 with the screws 06M-280, 06M-300, the washers 06M-230 and the caps 06M-290.

(e) Attach the angles 06M-200 with the screws 06M-220 and the washers 06M-230 to the aft side wall assembly 06M-010.

(f) Attach the oxygen container assy 06M-210 with the screws 06M-220 and the washers 06M-230 to the angles 06M-200.

(g) Attach the ground cable in accordance with the Process and Material Specification PMS 01-04-58 to the oxygen container assy 06M-210.

(h) Attach the angle 06M-170 with the screws 06M-220 and the washers 06M-230 to the aft side wall assembly 06M-010.

(i) Attach the cover oxygen container assy 06M-160 with the screws 06M-180 and the nuts 06M-190 to the angle 06M-170.

(j) Attach the studs 06M-240 and the washers 06M-230 to the cover oxygen container assy 06M-160.

(k) Attach the screws 06M-330 to the aft side wall assembly 06M-010.

(l) Attach the toilet seat cover dispenser 06M-320 to the screws 06M-330.

(m) Attach the support 06M-310 with the screws 06M-221 and the washers 06M-231 to the aft side wall assembly 06M-010.

(n) Install and assemble the handle assembly 06M-120 as follows:

1 Attach the special screws 06M-130 and the special washers 06M-150 to the aft side wall assembly 06M-010.

2 Attach the handle assembly 06M-120 to the aft side wall assembly 06M-010.

3 Attach the security pins 06M-140 to the handle assembly 06M-120.

SUB TASK 25-41-51-410-040-E01

D2549010601200 D2549010603200 D2549010604800 D2549010606400 D2549010607800 D2549020508000 D2549020512600 D2549020701400 D2549020706600 D2549020709000 R225401183-000 R225401183-008 R225401603-000

5. Installation of the Side Wall (06M-1)

(a) Attach the brackets 06M-013, 06M-017 to the aft side wall assembly 06M-010.

(b) Attach the fittings 06M-020 with the screws 06M-030 to the brackets 06M-013.

(c) Assemble the post assembly 06M-250 as follows:

1 Attach the screws 06M-260.

(d) Attach the post assembly 06M-250 with the screws 06M-280, 06M-300, the washers 06M-230 and the caps 06M-290.

(e) Attach the angles 06M-200 with the screws 06M-220 and the washers 06M-230 to the aft side wall assembly 06M-010.

(f) Attach the oxygen container assy 06M-210 with the screws 06M-220, 06M-225 and the washers 06M-230 to the angles 06M-200.

(g) Attach the ground cable in accordance with the Process and Material Specification PMS 01-04-58 to the oxygen container assy 06M-210.

(h) Attach the angle 06M-170 with the screws 06M-220 and the washers 06M-230 to the aft side wall assembly 06M-010.

(i) Attach the cover oxygen container assy 06M-160 with the screws 06M-180 and the nuts 06M-190 to the angle 06M-170.

(j) Attach the studs 06M-240 and the washers 06M-230 to the cover oxygen container assy 06M-160.

(k) Attach the screws 06M-330 to the aft side wall assembly 06M-010.

(l) Attach the toilet seat cover dispenser 06M-320 to the screws 06M-330.

(m) Install and assemble the handle assemblies 06M-340 as follows:

1 Attach the special screws 06M-350 and the special washers 06M-370 to the aft side wall assembly 06M-010.

2 Attach the handle assemblies 06M-340 to the aft side wall assembly 06M-010.

3 Attach the security pins 06M-360 to the handle assemblies 06M-340.

SUB TASK 25-41-51-410-040-F01
D2549020508600 D2549020710200 D2549020710400 D2549030510800 D2549030513400 D2549030608600 R225401136-000 R225401136-010 R225401136-020 R225401136-022

6. Installation of the Side Wall (06M-1)

(a) Attach the brackets 06M-013, 06M-017 to the aft side wall assembly 06M-010.

(b) Attach the fittings 06M-020 with the screws 06M-030 to the brackets 06M-013.

(c) Assemble the post assembly 06M-250 as follows:

1 Attach the screws 06M-260.

(d) Attach the post assembly 06M-250 with the screws 06M-280, 06M-300, the washers 06M-230 and the caps 06M-290.

(e) Attach the angles 06M-200 with the screws 06M-220 and the washers 06M-230 to the aft side wall assembly 06M-010.

(f) Attach the oxygen container assy 06M-210 with the screws 06M-220, 06M-225 and the washers 06M-230 to the angles 06M-200.

(g) Attach the ground cable in accordance with the Process and Material Specification PMS 01-04-58 to the oxygen container assy 06M-210.

(h) Attach the angle 06M-170 with the screws 06M-220 and the washers 06M-230 to the aft side wall assembly 06M-010.

(i) Attach the cover oxygen container assy 06M-160 with the screws 06M-180 and the nuts 06M-190 to the angle 06M-170.

(j) Attach the studs 06M-240 and the washers 06M-230 to the cover oxygen container assy 06M-160.

(k) Install and assemble the handle assemblies 06M-340 as follows:

1 Attach the special screws 06M-350 and the special washers 06M-370 to the aft side wall assembly 06M-010.

2 Attach the handle assemblies 06M-340 to the aft side wall assembly 06M-010.

3 Attach the security pins 06M-360 to the handle assemblies 06M-340.

SUB TASK 25-41-51-410-040-G01
D2549020514200 D2549020514600 D2549020602200 D2549020613200 R225401619-002

7. Installation of the Side Wall (06M-1)

(a) Attach the brackets 06M-013, 06M-017 to the aft side wall assembly 06M-010.

(b) Attach the fittings 06M-020 with the screws 06M-030 to the brackets 06M-013.

(c) Assemble the post assembly 06M-250 as follows:

1 Attach the screws 06M-260.

(d) Attach the post assembly 06M-250 with the screws 06M-280, 06M-300, the washers 06M-230 and the caps 06M-290.

(e) Attach the angles 06M-200 with the screws 06M-220 and the washers 06M-230 to the aft side wall assembly 06M-010.

(f) Attach the oxygen container assy 06M-210 with the screws 06M-220 and the washers 06M-230 to the angles 06M-200.

(g) Attach the ground cable in accordance with the Process and Material Specification PMS 01-04-58 to the oxygen container assy 06M-210.

(h) Attach the angle 06M-170 with the screws 06M-220 and the washers 06M-230 to the aft side wall assembly 06M-010.

(i) Attach the cover oxygen container assy 06M-160 with the screws 06M-180 and the nuts 06M-190 to the angle 06M-170.

(j) Attach the studs 06M-240 and the washers 06M-230 to the cover oxygen container assy 06M-160.

(k) Install and assemble the handle assemblies 06M-340 as follows:

1 Attach the special screws 06M-350 and the special washers 06M-370 to the aft side wall assembly 06M-010.

2 Attach the handle assemblies 06M-340 to the aft side wall assembly 06M-010.

3 Attach the security pins 06M-360 to the handle assemblies 06M-340.

SUB TASK 25-41-51-410-040-H01
D2549010514800 D2549010600600 D2549010602800 D2549020509200 D2549020612400 D2549020700200 D2549020708200 D2549030508000 D2549030511400 R225401153-000

8. Installation of the Side Wall (06M-1)

(a) Attach the brackets 06M-013, 06M-017 to the aft side wall assembly 06M-010.

(b) Attach the fittings 06M-020 with the screws 06M-030 to the brackets 06M-013.

(c) Assemble the post assembly 06M-250 as follows:

1 Attach the screws 06M-260.

(d) Attach the post assembly 06M-250 with the screws 06M-280, 06M-300, the washers 06M-230 and the caps 06M-290.

(e) Attach the angles 06M-200 with the screws 06M-220 and the washers 06M-230 to the aft side wall assembly 06M-010.

(f) Attach the oxygen container assy 06M-210 with the screws 06M-220, 06M-225 and the washers 06M-230 to the angles 06M-200.

(g) Attach the ground cable in accordance with the Process and Material Specification PMS 01-04-58 to the oxygen container assy 06M-210.

(h) Attach the angle 06M-170 with the screws 06M-220 and the washers 06M-230 to the aft side wall assembly 06M-010.

(i) Attach the cover oxygen container assy 06M-160 with the screws 06M-180 and the nuts 06M-190 to the angle 06M-170.

(j) Attach the studs 06M-240 and the washers 06M-230 to the cover oxygen container assy 06M-160.

(k) Attach the support 06M-310 with the screws 06M-221 and the washers 06M-231 to the aft side wall assembly 06M-010.

(l) Install and assemble the handle assembly 06M-120 as follows:

1 Attach the special screws 06M-130 and the special washers 06M-150 to the aft side wall assembly 06M-010.

2 Attach the handle assembly 06M-120 to the aft side wall assembly 06M-010.

3 Attach the security pins 06M-140 to the handle assembly 06M-120.

SUB TASK 25-41-51-410-040-J01
D2549020507000 D2549020507200

9. Installation of the Side Wall (06M-1)

(a) Attach the brackets 06M-013, 06M-017 to the aft side wall assembly 06M-010.

(b) Attach the fittings 06M-020 with the screws 06M-030 to the brackets 06M-013.

(c) Assemble the post assembly 06M-250 as follows:

1 Attach the screws 06M-260.

(d) Attach the post assembly 06M-250 with the screws 06M-280, 06M-300, the washers 06M-230 and the caps 06M-290.

(e) Attach the angles 06M-200 with the screws 06M-220 and the washers 06M-230 to the aft side wall assembly 06M-010.

(f) Attach the oxygen container assy 06M-210 with the screws 06M-220 and the washers 06M-230 to the angles 06M-200.

(g) Attach the ground cable in accordance with the Process and Material Specification PMS 01-04-58 to the oxygen container assy 06M-210.

(h) Attach the angle 06M-170 with the screws 06M-220 and the washers 06M-230 to the aft side wall assembly 06M-010.

(i) Attach the cover oxygen container assy 06M-160 with the screws 06M-180 and the nuts 06M-190 to the angle 06M-170.

(j) Attach the studs 06M-240 and the washers 06M-230 to the cover oxygen container assy 06M-160.

(k) Attach the support 06M-310 with the screws 06M-221 and the washers 06M-231 to the aft side wall assembly 06M-010.

(l) Install and assemble the handle assembly 06M-120 as follows:

1 Attach the special screws 06M-130 and the special washers 06M-150 to the aft side wall assembly 06M-010.

2 Attach the handle assembly 06M-120 to the aft side wall assembly 06M-010.

3 Attach the security pins 06M-140 to the handle assembly 06M-120.

TASK 25-41-51-400-819-P01

D2549010514600 D2549010601400 D2549010602000 D2549010602200 D2549010603000
D2549010603400 D2549010604400 D2549010604600 D2549010605000 D2549010605800
D2549010607200 D2549020514400 D2549020612800 D2549020613800 D2549020614000
D2549020700400 D2549020700600 D2549020701000 D2549020706000 D2549020707800
D2549020710600 D2549020713800 D2549030507400 D2549030509800 D2549030510200
D2549030511000 D2549030511200 D2549030511600 D2549030512000 D2549030512200
D2549030512800 D2549030514800 D2549030600000 D2549030600800 D2549030601000
D2549030601600 D2549030602000 D2549030603600 D2549030604600 D2549030605000
D2549030606200 D2549030606600 D2549030607800 D2549030609200 D2549030611600
R225401145-002 R225401145-004 R225401145-006 R225401145-012 R225401168-000
R225401168-004 R225401168-006 R225401168-014 R225401168-016 R225401168-018
R225401168-020 R225401168-028 R225401172-006 R225401172-008 R225401172-010
R225401172-012 R225401172-014 R225401172-016 R225401619-000

197. Installation of the Side Wall

A. General

This task gives you the installation and assembly procedures of the component.

B. Job Set-up Information

(1) Not applicable

C. Procedure

WARNING: BE CAREFUL WHEN YOU USE SOLVENTS/CLEANING AGENTS, SEALANTS AND OTHER MATERIALS. OBEY THE MATERIAL MANUFACTURER'S INSTRUCTIONS AND THE LOCAL REGULATIONS. MAKE SURE THAT THERE IS A GOOD FLOW OF AIR THROUGH THE WORK AREA. DO NOT BREATHE THE FUMES. DO NOT SMOKE. DO NOT USE THESE MATERIALS NEAR A FLAME, SPARKS OR SOURCES OF HEAT. USE PROTECTIVE CLOTHING, GOGGLES AND GLOVES. IF YOU GET ONE OF THESE MATERIALS ON YOUR SKIN OR IN YOUR EYES, FLUSH IT AWAY WITH A FLOW OF CLEAN WATER. IF YOU GET ONE OF THESE MATERIALS IN YOUR MOUTH, GET IMMEDIATE MEDICAL AID. IN GENERAL, THESE MATERIALS ARE POISONOUS, FLAMMABLE AND SKIN IRRITANTS.

WARNING: KEEP ALL HYDROCARBONS (FUELS, LUBRICANTS, ETC.) AWAY FROM ALL SOURCES OF OXYGEN. OXYGEN BECOMES EXPLOSIVE WHEN IT TOUCHES HYDROCARBONS.

WARNING: TO PREVENT CONTAMINATION OF THE OXYGEN SYSTEM, MAKE SURE THAT YOUR HANDS AND ALL THE TOOLS ARE CLEAN.

CAUTION: **DO ALL THE WORK ON A CLEAN, SOFT SURFACE TO PREVENT DAMAGE TO THE COMPONENTS.**

CAUTION: **MAKE SURE THAT ALL THE PARTS ARE CLEAN BEFORE YOU ASSEMBLE THEM.**

SUB TASK 25-41-51-410-041-A01
D2549020707800

1. Installation of the Side Wall (06N-1)

   (a) Attach the brackets 06N-013, 06N-017 to the aft side wall assembly 06N-010.

   (b) Attach the fittings 06N-020 with the screws 06N-030 to the brackets 06N-013.

   (c) Assemble the post assembly 06N-250 as follows:

      1 Attach the screws 06N-260.

   (d) Attach the post assembly 06N-250 with the screws 06N-280, 06N-300, the washers 06N-230 and the caps 06N-290.

   (e) Attach the angles 06N-200 with the screws 06N-220 and the washers 06N-230 to the aft side wall assembly 06N-010.

   (f) Attach the oxygen container assy 06N-210 with the screws 06N-220 and the washers 06N-230 to the angles 06N-200.

   (g) Attach the ground cable in accordance with the Process and Material Specification PMS 01-04-58 to the oxygen container assy 06N-210.

   (h) Attach the angle 06N-170 with the screws 06N-220 and the washers 06N-230 to the aft side wall assembly 06N-010.

   (i) Attach the cover oxygen container assy 06N-160 with the screws 06N-180 and the nuts 06N-190 to the angle 06N-170.

   (j) Attach the studs 06N-240 and the washers 06N-230 to the cover oxygen container assy 06N-160.

   (k) Attach the screws 06N-330 to the aft side wall assembly 06N-010.

   (l) Attach the toilet seat cover dispenser 06N-320 to the screws 06N-330.

   (m) Install and assemble the handle assemblies 06N-120 as follows:

1 Attach the special screws 06N-130 and the special washers 06N-150 to the aft side wall assembly 06N-010.

2 Attach the handle assemblies 06N-120 to the aft side wall assembly 06N-010.

3 Attach the security pins 06N-140 to the handle assemblies 06N-120.

SUB TASK 25-41-51-410-041-B01
D2549010514600 D2549010604400 D2549010605000 D2549010607200 D2549020710600 D2549030511200 D2549030512800 R225401145-002 R225401145-004 R225401145-006 R225401145-012

2. Installation of the Side Wall (06N-1)

(a) Attach the brackets 06N-013, 06N-017 to the aft side wall assembly 06N-010.

(b) Attach the fittings 06N-020 with the screws 06N-030 to the brackets 06N-013.

(c) Assemble the post assembly 06N-250 as follows:

1 Attach the screws 06N-260.

(d) Attach the post assembly 06N-250 with the screws 06N-280, 06N-300, the washers 06N-230 and the caps 06N-290.

(e) Attach the angles 06N-200 with the screws 06N-220 and the washers 06N-230 to the aft side wall assembly 06N-010.

(f) Attach the oxygen container assy 06N-210 with the screws 06N-220, 06N-222 and the washers 06N-230 to the angles 06N-200.

(g) Attach the ground cable in accordance with the Process and Material Specification PMS 01-04-58 to the oxygen container assy 06N-210.

(h) Attach the angle 06N-170 with the screws 06N-220 and the washers 06N-230 to the aft side wall assembly 06N-010.

(i) Attach the cover oxygen container assy 06N-160 with the screws 06N-180 and the nuts 06N-190 to the angle 06N-170.

(j) Attach the studs 06N-240 and the washers 06N-230 to the cover oxygen container assy 06N-160.

(k) Attach the screws 06N-330 to the aft side wall assembly 06N-010.

(l) Attach the toilet seat cover dispenser 06N-320 to the screws 06N-330.

(m) Attach the support 06N-310 with the screws 06N-221 and the washers 06N-231 to the aft side wall assembly 06N-010.

(n) Install and assemble the handle assembly 06N-340 as follows:

1 Attach the special screws 06N-350 and the special washers 06N-370 to the aft side wall assembly 06N-010.

2 Attach the handle assembly 06N-340 to the aft side wall assembly 06N-010.

3 Attach the security pins 06N-360 to the handle assembly 06N-340.

SUB TASK 25-41-51-410-041-C01
D2549010601400 D2549020612800 D2549020713800 D2549030509800 D2549030511000 D2549030512000 D2549030514800 D2549030602000 D2549030605000 D2549030606200 D2549030609200 D2549030611600 R225401172-006 R225401172-008 R225401172-010 R225401172-012 R225401172-014 R225401172-016

3. Installation of the Side Wall (06N-1)

(a) Attach the brackets 06N-013, 06N-017 to the aft side wall assembly 06N-010.

(b) Attach the fittings 06N-020 with the screws 06N-030 to the brackets 06N-013.

(c) Assemble the post assembly 06N-250 as follows:

1 Attach the screws 06N-260.

(d) Attach the post assembly 06N-250 with the screws 06N-280, 06N-300, the washers 06N-230 and the caps 06N-290.

(e) Attach the angles 06N-200 with the screws 06N-220 and the washers 06N-230 to the aft side wall assembly 06N-010.

(f) Attach the oxygen container assy 06N-210, with the screws 06N-220, 06N-222 and the washers 06N-230 to the angles 06N-200.

(g) Attach the ground cable in accordance with the Process and Material Specification PMS 01-04-58 to the oxygen container assy 06N-210.

(h) Attach the angle 06N-170 with the screws 06N-220 and the washers 06N-230 to the aft side wall assembly 06N-010.

(i) Attach the cover oxygen container assy 06N-160 with the screws 06N-180 and the nuts 06N-190 to the angle 06N-170.

(j) Attach the studs 06N-240 and the washers 06N-230 to the cover oxygen container assy 06N-160.

(k) Attach the screws 06N-330 to the aft side wall assembly 06N-010.

(l) Attach the toilet seat cover dispenser 06N-320 to the screws 06N-330.

(m) Install and assemble the handle assemblies 06N-120 as follows:

1 Attach the special screws 06N-130 and the special washers 06N-150 to the aft side wall assembly 06N-010.

2 Attach the handle assemblies 06N-120 to the aft side wall assembly 06N-010.

3 Attach the security pins 06N-140 to the handle assemblies 06N-120.

SUB TASK 25-41-51-410-041-D01
D2549020613800

4. Installation of the Side Wall (06N-1)

(a) Attach the brackets 06N-013, 06N-017 to the aft side wall assembly 06N-010.

(b) Attach the fittings 06N-020 with the screws 06N-030 to the brackets 06N-013.

(c) Assemble the post assembly 06N-250 as follows:

1 Attach the screws 06N-260.

(d) Attach the post assembly 06N-250 with the screws 06N-280, 06N-300, the washers 06N-230 and the caps 06N-290.

(e) Attach the angles 06N-200 with the screws 06N-220 and the washers 06N-230 to the aft side wall assembly 06N-010.

(f) Attach the oxygen container assy 06N-210 with the screws 06N-220 and the washers 06N-230 to the angles 06N-200.

(g) Attach the ground cable in accordance with the Process and Material Specification PMS 01-04-58 to the oxygen container assy 06N-210.

(h) Attach the angle 06N-170 with the screws 06N-220 and the washers 06N-230 to the aft side wall assembly 06N-010.

(i) Attach the cover oxygen container assy 06N-160 with the screws 06N-180 and the nuts 06N-190 to the angle 06N-170.

(j) Attach the studs 06N-240 and the washers 06N-230 to the cover oxygen container assy 06N-160.

(k) Attach the support 06N-310 with the screws 06N-221 and the washers 06N-231 to the aft side wall assembly 06N-010.

(l) Install and assemble the handle assembly 06N-340 as follows:

1 Attach the special screws 06N-350 and the special washers 06N-370 to the aft side wall assembly 06N-010.

2 Attach the handle assembly 06N-340 to the aft side wall assembly 06N-010.

3 Attach the security pins 06N-360 to the handle assembly 06N-340.

SUB TASK 25-41-51-410-041-E01
D2549010602000 D2549010602200 D2549010604600 D2549020701000

5. Installation of the Side Wall (06N-1)

(a) Attach the brackets 06N-013, 06N-017 to the aft side wall assembly 06N-010.

(b) Attach the fittings 06N-020 with the screws 06N-030 to the brackets 06N-013.

(c) Assemble the post assembly 06N-250 as follows:

1 Attach the screws 06N-260.

(d) Attach the post assembly 06N-250 with the screws 06N-280, 06N-300, the washers 06N-230 and the caps 06N-290.

(e) Attach the angles 06N-200 with the screws 06N-220 and the washers 06N-230 to the aft side wall assembly 06N-010.

(f) Attach the oxygen container assy 06N-210 with the screws 06N-220 and the washers 06N-230 to the angles 06N-200.

(g) Attach the ground cable in accordance with the Process and Material Specification PMS 01-04-58 to the oxygen container assy 06N-210.

(h) Attach the angle 06N-170 with the screws 06N-220 and the washers 06N-230 to the aft side wall assembly 06N-010.

(i) Attach the cover oxygen container assy 06N-160 with the screws 06N-180 and the nuts 06N-190 to the angle 06N-170.

(j) Attach the studs 06N-240 and the washers 06N-230 to the cover oxygen container assy 06N-160.

(k) Attach the support 06N-310 with the screws 06N-221 and the washers 06N-231 to the aft side wall assembly 06N-010.

(l) Install and assemble the handle assembly 06N-340 as follows:

1 Attach the special screws 06N-350 and the special washers 06N-370 to the aft side wall assembly 06N-010.

2 Attach the handle assembly 06N-340 to the aft side wall assembly 06N-010.

3 Attach the security pins 06N-360 to the handle assembly 06N-340.

SUB TASK 25-41-51-410-041-F01
D2549010603000 D2549010603400 D2549010605800 D2549020514400 D2549020614000 D2549020700400 D2549020700600 D2549020706000 D2549030601000 D2549030606600 R225401619-000

6. Installation of the Side Wall (06N-1)

(a) Attach the brackets 06N-013, 06N-017 to the aft side wall assembly 06N-010.

(b) Attach the fittings 06N-020 with the screws 06N-030 to the brackets 06N-013.

(c) Assemble the post assembly 06N-250 as follows:

1 Attach the screws 06N-260.

(d) Attach the post assembly 06N-250 with the screws 06N-280, 06N-300, the washers 06N-230 and the caps 06N-290.

(e) Attach the angles 06N-200 with the screws 06N-220 and the washers 06N-230 to the aft side wall assembly 06N-010.

(f) Attach the oxygen container assy 06N-210 with the screws 06N-220 and the washers 06N-230 to the angles 06N-200.

(g) Attach the ground cable in accordance with the Process and Material Specification PMS 01-04-58 to the oxygen container assy 06N-210.

(h) Attach the angle 06N-170 with the screws 06N-220 and the washers 06N-230 to the aft side wall assembly 06N-010.

(i) Attach the cover oxygen container assy 06N-160 with the screws 06N-180 and the nuts 06N-190 to the angle 06N-170.

(j) Attach the studs 06N-240 and the washers 06N-230 to the cover oxygen container assy 06N-160.

(k) Install and assemble the handle assemblies 06N-120 as follows:

1 Attach the special screws 06N-130 and the special washers 06N-150 to the aft side wall assembly 06N-010.

2 Attach the handle assemblies 06N-120 to the aft side wall assembly 06N-010.

3 Attach the security pins 06N-140 to the handle assemblies 06N-120.

SUB TASK 25-41-51-410-041-G01
D2549030511600 D2549030512200 D2549030600000 D2549030604600

7. Installation of the Side Wall (06N-1)

(a) Attach the brackets 06N-013, 06N-017 to the aft side wall assembly 06N-010.

(b) Attach the fittings 06N-020 with the screws 06N-030 to the brackets 06N-013.

(c) Assemble the post assembly 06N-250 as follows:

1 Attach the screws 06N-260.

(d) Attach the post assembly 06N-250 with the screws 06N-280, 06N-300, the washers 06N-230 and the caps 06N-290.

(e) Attach the angles 06N-200 with the screws 06N-220 and the washers 06N-230 to the aft side wall assembly 06N-010.

(f) Attach the oxygen container assy 06N-210 with the screws 06N-220 and the washers 06N-230 to the angles 06N-200.

(g) Attach the ground cable in accordance with the Process and Material Specification PMS 01-04-58 to the oxygen container assy 06N-210.

(h) Attach the angle 06N-170 with the screws 06N-220 and the washers 06N-230 to the aft side wall assembly 06N-010.

(i) Attach the cover oxygen container assy 06N-160 with the screws 06N-180 and the nuts 06N-190 to the angle 06N-170.

(j) Attach the studs 06N-240 and the washers 06N-230 to the cover oxygen container assy 06N-160.

(k) Install and assemble the handle assemblies 06N-120 as follows:

1 Attach the special screws 06N-130 and the special washers 06N-150 to the aft side wall assembly 06N-010.

2 Attach the handle assemblies 06N-120 to the aft side wall assembly 06N-010.

3 Attach the security pins 06N-140 to the handle assemblies 06N-120.

SUB TASK 25-41-51-410-041-H01
D2549030507400 D2549030510200 D2549030600800 D2549030601600 D2549030603600 D2549030607800 R225401168-000 R225401168-004 R225401168-006 R225401168-014 R225401168-016 R225401168-018 R225401168-020 R225401168-028

8. Installation of the Side Wall (06N-1)

(a) Attach the brackets 06N-013, 06N-017 to the aft side wall assembly 06N-010.

(b) Attach the fittings 06N-020 with the screws 06N-030 to the brackets 06N-013.

(c) Assemble the post assembly 06N-250 as follows:

1 Attach the screws 06N-260.

(d) Attach the post assembly 06N-250 with the screws 06N-280, 06N-300, the washers 06N-230 and the caps 06N-290.

(e) Attach the angles 06N-200 with the screws 06N-220 and the washers 06N-230 to the aft side wall assembly 06N-010.

(f) Attach the oxygen container assy 06N-210 with the screws 06N-220, 06N-222 and the washers 06N-230 to the angles 06N-200.

(g) Attach the ground cable in accordance with the Process and Material Specification PMS 01-04-58 to the oxygen container assy 06N-210.

(h) Attach the angle 06N-170 with the screws 06N-220 and the washers 06N-230 to the aft side wall assembly 06N-010.

(i) Attach the cover oxygen container assy 06N-160 with the screws 06N-180 and the nuts 06N-190 to the angle 06N-170.

(j) Attach the studs 06N-240 and the washers 06N-230 to the cover oxygen container assy 06N-160.

(k) Install and assemble the handle assemblies 06N-120 as follows:

1 Attach the special screws 06N-130 and the special washers 06N-150 to the aft side wall assembly 06N-010.

2 Attach the handle assemblies 06N-120 to the aft side wall assembly 06N-010.

3 Attach the security pins 06N-140 to the handle assemblies 06N-120.

TASK 25-41-51-400-819-Q01

D2549010601600 D2549010602400 D2549010602600 D2549010606200 D2549020508800 D2549020512000 D2549020610600 D2549020702600 D2549020703400 D2549020704200 D2549020704400 D2549020705200 D2549020709800 D2549020711400 D2549020713200 D2549030512400 D2549030513000 D2549030513800 D2549030514200 D2549030514600 D2549030600600 D2549030601800 D2549030603800 D2549030604200 D2549030605600 D2549030605800 D2549030607400 D2549030608800 D2549030611200 R225401134-018 R225401137-010 R225401142-000 R225401142-002 R225401152-000 R225401152-002 R225401152-004 R225401152-006 R225401196-000 R225401196-002 R225401196-004 R225401196-034 R225401196-036 R225401196-046 R225401196-048 R225401196-050

198. Installation of the Side Wall

A. General

This task gives you the installation and assembly procedures of the component.

B. Job Set-up Information

(1) Consumable Materials

REFERENCE	DESIGNATION
08-007	Sealant, High Temperature

Table 7027
Consumable Materials

C. Procedure

WARNING: **BE CAREFUL WHEN YOU USE SOLVENTS/CLEANING AGENTS, SEALANTS AND OTHER MATERIALS. OBEY THE MATERIAL MANUFACTURER'S INSTRUCTIONS AND THE LOCAL REGULATIONS. MAKE SURE THAT THERE IS A GOOD FLOW OF AIR THROUGH THE WORK AREA. DO NOT BREATHE THE FUMES. DO NOT SMOKE. DO NOT USE THESE MATERIALS NEAR A FLAME, SPARKS OR SOURCES OF HEAT. USE PROTECTIVE CLOTHING, GOGGLES AND GLOVES. IF YOU GET ONE OF THESE MATERIALS ON YOUR SKIN OR IN YOUR EYES, FLUSH IT AWAY WITH A FLOW OF CLEAN WATER. IF YOU GET ONE OF THESE MATERIALS IN YOUR MOUTH, GET IMMEDIATE MEDICAL AID. IN GENERAL, THESE MATERIALS ARE POISONOUS, FLAMMABLE AND SKIN IRRITANTS.**

WARNING: **KEEP ALL HYDROCARBONS (FUELS, LUBRICANTS, ETC.) AWAY FROM ALL SOURCES OF OXYGEN. OXYGEN BECOMES EXPLOSIVE WHEN IT TOUCHES HYDROCARBONS.**

WARNING: **TO PREVENT CONTAMINATION OF THE OXYGEN SYSTEM, MAKE SURE THAT YOUR HANDS AND ALL THE TOOLS ARE CLEAN.**

CAUTION: **DO ALL THE WORK ON A CLEAN, SOFT SURFACE TO PREVENT DAMAGE TO THE COMPONENTS.**

CAUTION: **MAKE SURE THAT ALL THE PARTS ARE CLEAN BEFORE YOU ASSEMBLE THEM.**

SUB TASK 25-41-51-410-042-A01
D2549010606200

1. Installation of the Side Wall (06P-1)

   (a) Attach the brackets 06P-013, 06P-017 to the aft side wall assembly 06P-010.

   (b) Attach the fittings 06P-020 with the screws 06P-030 to the brackets 06P-013.

   (c) Assemble the post assembly 06P-260 as follows:

      1 Attach the screws 06P-270.

   (d) Attach the post assembly 06P-260 with the screws 06P-290, 06P-310, the washers 06P-240 and the caps 06P-300.

   (e) Assemble the single door emergency unlocking device assembly 06P-390 as follows:

      WARNING: **BE CAREFUL WHEN YOU USE MATERIAL NO. 08-007 SEALANT, HIGH TEMPERATURE. OBEY THE MATERIAL MANUFACTURER'S INSTRUCTIONS.**

      1 Apply the Material No. 08-007 Sealant, High Temperature to the snap catch 06P-440 and to the pin 06P-430 and attach the emergency unlocking-device pivot 06P-420, the snap catch 06P-440 and the pin 06P-430 to the emergency unlocking-device housing 06P-400.

      NOTE: **Adjust the snap catch 06P-440 a half turn before stop.**

      WARNING: **BE CAREFUL WHEN YOU USE MATERIAL NO. 08-007 SEALANT, HIGH TEMPERATURE. OBEY THE MATERIAL MANUFACTURER'S INSTRUCTIONS.**

      2 Apply the Material No. 08-007 Sealant, High Temperature to the bolt 06P-450 and attach the emergency unlocking-device strike 06P-410 with the bolt 06P-450 to the emergency unlocking-device housing 06P-400.

(f) Attach the single door emergency unlocking device assembly 06P-390 and the plates 06P-460 with the screws 06P-470 and the nuts 06P-480 to the post assembly 06P-260.

(g) Attach the angles 06P-200 with the screws 06P-220 and the washers 06P-240 to the aft side wall assembly 06P-010.

(h) Attach the oxygen container assy 06P-210 with the screws 06P-220 and the washers 06P-240 to the angles 06P-200.

(i) Attach the ground cable in accordance with the Process and Material Specification PMS 01-04-58 to the oxygen container assy 06P-210.

(j) Attach the angle 06P-170 with the screws 06P-220 and the washers 06P-240 to the aft side wall assembly 06P-010.

(k) Attach the cover oxygen container assy 06P-160 with the screws 06P-180 and the nuts 06P-190 to the angle 06P-170.

(l) Attach the studs 06P-250 and the washers 06P-240 to the cover oxygen container assy 06P-160.

(m) Attach the support 06P-320 with the screws 06P-230 and the washers 06P-241 to the aft side wall assembly 06P-010.

(n) Install and assemble the handle assembly 06P-120 as follows:

1 Attach the special screws 06P-130 and the special washers 06P-150 to the aft side wall assembly 06P-010.

2 Attach the handle assembly 06P-120 to the aft side wall assembly 06P-010.

3 Attach the security pins 06P-140 to the handle assembly 06P-120.

SUB TASK 25-41-51-410-042-B01
D2549030514200 D2549030600600 D2549030605800

2. Installation of the Side Wall (06P-1)

(a) Attach the brackets 06P-013, 06P-017 to the aft side wall assembly 06P-010.

(b) Attach the fittings 06P-020 with the screws 06P-030 to the brackets 06P-013.

(c) Assemble the post assembly 06P-260 as follows:

1 Attach the screws 06P-270.

(d) Attach the post assembly 06P-260 with the screws 06P-290, 06P-310, the washers 06P-240 and the caps 06P-300.

(e) Attach the angles 06P-200 with the screws 06P-220 and the washers 06P-240 to the aft side wall assembly 06P-010.

(f) Attach the oxygen container assy 06P-210 with the screws 06P-220 and the washers 06P-240 to the angles 06P-200.

(g) Attach the ground cable in accordance with the Process and Material Specification PMS 01-04-58 to the oxygen container assy 06P-210.

(h) Attach the angle 06P-170 with the screws 06P-220 and the washers 06P-240 to the aft side wall assembly 06P-010.

(i) Attach the cover oxygen container assy 06P-160 with the screws 06P-180 and the nuts 06P-190 to the angle 06P-170.

(j) Attach the studs 06P-250 and the washers 06P-240 to the cover oxygen container assy 06P-160.

(k) Attach the screws 06P-340 to the aft side wall assembly 06P-010.

(l) Attach the toilet seat cover dispenser 06P-330 to the screws 06P-340.

(m) Install and assemble the handle assemblies 06P-350 as follows:

1 Attach the special screws 06P-360 and the special washers 06P-380 to the aft side wall assembly 06P-010.

2 Attach the handle assemblies 06P-350 to the aft side wall assembly 06P-010.

3 Attach the security pins 06P-370 to the handle assemblies 06P-350.

SUB TASK 25-41-51-410-042-C01
D2549010602600

3. Installation of the Side Wall (06P-1)

(a) Attach the brackets 06P-013, 06P-017 to the aft side wall assembly 06P-010.

(b) Attach the fittings 06P-020 with the screws 06P-030 to the brackets 06P-013.

(c) Assemble the post assembly 06P-260 as follows:

1 Attach the screws 06P-270.

(d) Attach the post assembly 06P-260 with the screws 06P-290, 06P-310, the washers 06P-240 and the caps 06P-300.

(e) Attach the angles 06P-200 with the screws 06P-220 and the washers 06P-240 to the aft side wall assembly 06P-010.

(f) Attach the oxygen container assy 06P-210 with the screws 06P-220 and the washers 06P-240 to the angles 06P-200.

(g) Attach the ground cable in accordance with the Process and Material Specification PMS 01-04-58 to the oxygen container assy 06P-210.

(h) Attach the angle 06P-170 with the screws 06P-220 and the washers 06P-240 to the aft side wall assembly 06P-010.

(i) Attach the cover oxygen container assy 06P-160 with the screws 06P-180 and the nuts 06P-190 to the angle 06P-170.

(j) Attach the studs 06P-250 and the washers 06P-240 to the cover oxygen container assy 06P-160.

(k) Attach the screws 06P-340 to the aft side wall assembly 06P-010.

(l) Attach the toilet seat cover dispenser 06P-330 to the screws 06P-340.

(m) Install and assemble the handle assemblies 06P-350 as follows:

1 Attach the special screws 06P-360 and the special washers 06P-380 to the aft side wall assembly 06P-010.

2 Attach the handle assemblies 06P-350 to the aft side wall assembly 06P-010.

3 Attach the security pins 06P-370 to the handle assemblies 06P-350.

SUB TASK 25-41-51-410-042-D01

D2549020704200 D2549020704400 D2549030513800 D2549030601800 D2549030603800 D2549030607400 D2549030608800 D2549030611200 R225401142-000 R225401142-002

4. Installation of the Side Wall (06P-1)

(a) Attach the brackets 06P-013, 06P-017 to the aft side wall assembly 06P-010.

(b) Attach the fittings 06P-020 with the screws 06P-030 to the brackets 06P-013.

(c) Assemble the post assembly 06P-260 as follows:

1 Attach the screws 06P-270.

(d) Attach the post assembly 06P-260 with the screws 06P-290, 06P-310, the washers 06P-240 and the caps 06P-300.

(e) Attach the angles 06P-200 with the screws 06P-220 and the washers 06P-240 to the aft side wall assembly 06P-010.

(f) Attach the oxygen container assy 06P-210 with the screws 06P-220, 06P-225 and the washers 06P-240, 06P-245 to the angles 06P-200.

(g) Attach the ground cable in accordance with the Process and Material Specification PMS 01-04-58 to the oxygen container assy 06P-210.

(h) Attach the angle 06P-170 with the screws 06P-220 and the washers 06P-240 to the aft side wall assembly 06P-010.

(i) Attach the cover oxygen container assy 06P-160 with the screws 06P-180 and the nuts 06P-190 to the angle 06P-170.

(j) Attach the studs 06P-250 and the washers 06P-240 to the cover oxygen container assy 06P-160.

(k) Attach the screws 06P-340 to the aft side wall assembly 06P-010.

(l) Attach the toilet seat cover dispenser 06P-330 to the screws 06P-340.

(m) Attach the support 06P-320 with the screws 06P-230 and the washers 06P-241 to the aft side wall assembly 06P-010.

(n) Install and assemble the handle assembly 06P-120 as follows:

1 Attach the special screws 06P-130 and the special washers 06P-150 to the aft side wall assembly 06P-010.

2 Attach the handle assembly 06P-120 to the aft side wall assembly 06P-010.

3 Attach the security pins 06P-140 to the handle assembly 06P-120.

SUB TASK 25-41-51-410-042-E01
D2549020508800 D2549020512000 D2549020703400 D2549020705200 D2549020709800 D2549020711400 D2549020713200 D2549030513000 R225401134-018 R225401152-000 R225401152-002 R225401152-004 R225401152-006 R225401196-000 R225401196-002 R225401196-004 R225401196-034 R225401196-036 R225401196-046 R225401196-048 R225401196-050

5. Installation of the Side Wall (06P-1)

(a) Attach the bushings 06P-385.

(b) If removed, attach the kick strip 06P-490 to the aft side wall assembly 06P-010.

(c) Attach the brackets 06P-013, 06P-017 to the aft side wall assembly 06P-010.

(d) Attach the fittings 06P-020 with the screws 06P-030 to the brackets 06P-013.

(e) Assemble the post assembly 06P-260 as follows:

1 Attach the screws 06P-270.

(f) Attach the post assembly 06P-260 with the screws 06P-290, 06P-310, the washers 06P-240 and the caps 06P-300.

(g) Attach the angles 06P-200 with the screws 06P-220 and the washers 06P-240 to the aft side wall assembly 06P-010.

(h) Attach the oxygen container assy 06P-210 with the screws 06P-220, 06P-225 and the washers 06P-240, 06P-245 to the angles 06P-200.

(i) Attach the ground cable in accordance with the Process and Material Specification PMS 01-04-58 to the oxygen container assy 06P-210.

(j) Attach the angle 06P-170 with the screws 06P-220 and the washers 06P-240 to the aft side wall assembly 06P-010.

(k) Attach the cover oxygen container assy 06P-160 with the screws 06P-180 and the nuts 06P-190 to the angle 06P-170.

(l) Attach the studs 06P-250 and the washers 06P-240 to the cover oxygen container assy 06P-160.

(m) Attach the screws 06P-340 to the aft side wall assembly 06P-010.

(n) Attach the toilet seat cover dispenser 06P-330 to the screws 06P-340.

(o) Attach the support 06P-320 with the screws 06P-230 and the washers 06P-241 to the aft side wall assembly 06P-010.

(p) Install and assemble the handle assembly 06P-120 as follows:

1 Attach the special screws 06P-130 and the special washers 06P-150 to the aft side wall assembly 06P-010.

2 Attach the handle assembly 06P-120 to the aft side wall assembly 06P-010.

3 Attach the security pins 06P-140 to the handle assembly 06P-120.

SUB TASK 25-41-51-410-042-F01
D2549020610600 R225401137-010

6. Installation of the Side Wall (06P-1)

(a) Attach the brackets 06P-013, 06P-017 to the aft side wall assembly 06P-010.

(b) Attach the fittings 06P-020 with the screws 06P-030 to the brackets 06P-013.

(c) Assemble the post assembly 06P-260 as follows:

1 Attach the screws 06P-270.

(d) Attach the post assembly 06P-260 with the screws 06P-290, 06P-310, the washers 06P-240 and the caps 06P-300.

(e) Attach the angles 06P-200 with the screws 06P-220 and the washers 06P-240 to the aft side wall assembly 06P-010.

(f) Attach the oxygen container assy 06P-210 with the screws 06P-220 and the washers 06P-240 to the angles 06P-200.

(g) Attach the ground cable in accordance with the Process and Material Specification PMS 01-04-58 to the oxygen container assy 06P-210.

(h) Attach the angle 06P-170 with the screws 06P-220 and the washers 06P-240 to the aft side wall assembly 06P-010.

(i) Attach the cover oxygen container assy 06P-160 with the screws 06P-180 and the nuts 06P-190 to the angle 06P-170.

(j) Attach the studs 06P-250 and the washers 06P-240 to the cover oxygen container assy 06P-160.

(k) Attach the screws 06P-340 to the aft side wall assembly 06P-010.

(l) Attach the toilet seat cover dispenser 06P-330 to the screws 06P-340.

(m) Install and assemble the handle assembly 06P-120 as follows:

1 Attach the special screws 06P-130 and the special washers 06P-150 to the aft side wall assembly 06P-010.

2 Attach the handle assembly 06P-120 to the aft side wall assembly 06P-010.

3 Attach the security pins 06P-140 to the handle assembly 06P-120.

SUB TASK 25-41-51-410-042-G01
D2549010601600 D2549010602400 D2549030512400

7. Installation of the Side Wall (06P-1)

(a) Attach the brackets 06P-013, 06P-017 to the aft side wall assembly 06P-010.

(b) Attach the fittings 06P-020 with the screws 06P-030 to the brackets 06P-013.

(c) Assemble the post assembly 06P-260 as follows:

1 Attach the screws 06P-270.

(d) Attach the post assembly 06P-260 with the screws 06P-290, 06P-310, the washers 06P-240 and the caps 06P-300.

(e) Attach the angles 06P-200 with the screws 06P-220 and the washers 06P-240 to the aft side wall assembly 06P-010.

(f) Attach the oxygen container assy 06P-210 with the screws 06P-220 and the washers 06P-240 to the angles 06P-200.

(g) Attach the ground cable in accordance with the Process and Material Specification PMS 01-04-58 to the oxygen container assy 06P-210.

(h) Attach the angle 06P-170 with the screws 06P-220 and the washers 06P-240 to the aft side wall assembly 06P-010.

(i) Attach the cover oxygen container assy 06P-160 with the screws 06P-180 and the nuts 06P-190 to the angle 06P-170.

(j) Attach the studs 06P-250 and the washers 06P-240 to the cover oxygen container assy 06P-160.

(k) Attach the support 06P-320 with the screws 06P-230 and the washers 06P-241 to the aft side wall assembly 06P-010.

(l) Install and assemble the handle assembly 06P-120 as follows:

1 Attach the special screws 06P-130 and the special washers 06P-150 to the aft side wall assembly 06P-010.

2 Attach the handle assembly 06P-120 to the aft side wall assembly 06P-010.

3 Attach the security pins 06P-140 to the handle assembly 06P-120.

SUB TASK 25-41-51-410-042-H01
D2549020702600 D2549030514600 D2549030604200 D2549030605600

8. Installation of the Side Wall (06P-1)

(a) Attach the brackets 06P-013, 06P-017 to the aft side wall assembly 06P-010.

(b) Attach the fittings 06P-020 with the screws 06P-030 to the brackets 06P-013.

(c) Assemble the post assembly 06P-260 as follows:

1 Attach the screws 06P-270.

(d) Attach the post assembly 06P-260 with the screws 06P-290, 06P-310, the washers 06P-240 and the caps 06P-300.

(e) Attach the angles 06P-200 with the screws 06P-220 and the washers 06P-240 to the aft side wall assembly 06P-010.

(f) Attach the oxygen container assy 06P-210 with the screws 06P-220 and the washers 06P-240 to the angles 06P-200.

(g) Attach the ground cable in accordance with the Process and Material Specification PMS 01-04-58 to the oxygen container assy 06P-210.

(h) Attach the angle 06P-170 with the screws 06P-220 and the washers 06P-240 to the aft side wall assembly 06P-010.

(i) Attach the cover oxygen container assy 06P-160 with the screws 06P-180 and the nuts 06P-190 to the angle 06P-170.

(j) Attach the studs 06P-250 and the washers 06P-240 to the cover oxygen container assy 06P-160.

(k) Attach the support 06P-320 with the screws 06P-230 and the washers 06P-241 to the aft side wall assembly 06P-010.

(l) Install and assemble the handle assembly 06P-120 as follows:

1 Attach the special screws 06P-130 and the special washers 06P-150 to the aft side wall assembly 06P-010.

2 Attach the handle assembly 06P-120 to the aft side wall assembly 06P-010.

3 Attach the security pins 06P-140 to the handle assembly 06P-120.

TASK 25-41-51-400-819-R01

D2549010600800 D2549010603600 D2549010607400 D2549020502200 D2549020507600 D2549020507800 D2549020511000 D2549020512200 D2549020702200 D2549020704800 D2549020705000 D2549020707200 D2549020707600 D2549020708400 D2549020708600 D2549020708800 D2549020710000 D2549020710800 D2549020712400 D2549020712800 D2549020713400 D2549020812800 D2549030510400 D2549030601400 D2549030602200 D2549030604400 D2549030608200 R225401160-000 R225401195-000

199. Installation of the Side Wall

A. General

This task gives you the installation and assembly procedures of the component.

B. Job Set-up Information

(1) Not applicable

C. Procedure

WARNING: BE CAREFUL WHEN YOU USE SOLVENTS/CLEANING AGENTS, SEALANTS AND OTHER MATERIALS. OBEY THE MATERIAL MANUFACTURER'S INSTRUCTIONS AND THE LOCAL REGULATIONS. MAKE SURE THAT THERE IS A GOOD FLOW OF AIR THROUGH THE WORK AREA. DO NOT BREATHE THE FUMES. DO NOT SMOKE. DO NOT USE THESE MATERIALS NEAR A FLAME, SPARKS OR SOURCES OF HEAT. USE PROTECTIVE CLOTHING, GOGGLES AND GLOVES. IF YOU GET ONE OF THESE MATERIALS ON YOUR SKIN OR IN YOUR EYES, FLUSH IT AWAY WITH A FLOW OF CLEAN WATER. IF YOU GET ONE OF THESE MATERIALS IN YOUR MOUTH, GET IMMEDIATE MEDICAL AID. IN GENERAL, THESE MATERIALS ARE POISONOUS, FLAMMABLE AND SKIN IRRITANTS.

WARNING: KEEP ALL HYDROCARBONS (FUELS, LUBRICANTS, ETC.) AWAY FROM ALL SOURCES OF OXYGEN. OXYGEN BECOMES EXPLOSIVE WHEN IT TOUCHES HYDROCARBONS.

WARNING: TO PREVENT CONTAMINATION OF THE OXYGEN SYSTEM, MAKE SURE THAT YOUR HANDS AND ALL THE TOOLS ARE CLEAN.

CAUTION: DO ALL THE WORK ON A CLEAN, SOFT SURFACE TO PREVENT DAMAGE TO THE COMPONENTS.

CAUTION: MAKE SURE THAT ALL THE PARTS ARE CLEAN BEFORE YOU ASSEMBLE THEM.

SUB TASK 25-41-51-410-043-A01
D2549020708800

1. Installation of the Side Wall (06Q-1)

   (a) Attach the brackets 06Q-013, 06Q-017 to the aft side wall assembly 06Q-010.

   (b) Attach the fittings 06Q-020, 06Q-025 with the screws 06Q-030, 06Q-035 to the brackets 06Q-013.

   (c) Assemble the post assembly 06Q-260 as follows:

      1 Attach the screws 06Q-270.

   (d) Attach the post assembly 06Q-260 with the screws 06Q-290, 06Q-310, the washers 06Q-240 and the caps 06Q-300.

   (e) Attach the angle 06Q-410 with the screws 06Q-290 and the washers 06Q-240 to the lavatory structure.

   (f) Attach the angles 06Q-200 with the screws 06Q-220 and the washers 06Q-240 to the aft side wall assembly 06Q-010.

   (g) Attach the oxygen container assy 06Q-210 with the screws 06Q-220 and the washers 06Q-240 to the angles 06Q-200.

   (h) Attach the ground cable in accordance with the Process and Material Specification PMS 01-04-58 to the oxygen container assy 06Q-210.

   (i) Attach the angle 06Q-170 with the screws 06Q-220 and the washers 06Q-240 to the aft side wall assembly 06Q-010.

   (j) Attach the cover oxygen container assy 06Q-160 with the screws 06Q-180 and the nuts 06Q-190 to the angle 06Q-170.

   (k) Attach the studs 06Q-250 and the washers 06Q-240 to the cover oxygen container assy 06Q-160.

   (l) Attach the screws 06Q-340 to the aft side wall assembly 06Q-010.

   (m) Attach the toilet seat cover dispenser 06Q-330 to the screws 06Q-340.

   (n) Install and assemble the handle assemblies 06Q-350 as follows:

1 Attach the special screws 06Q-360 and the special washers 06Q-380 to the aft side wall assembly 06Q-010.

2 Attach the handle assemblies 06Q-350 to the aft side wall assembly 06Q-010.

3 Attach the security pins 06Q-370 to the handle assemblies 06Q-350.

SUB TASK 25-41-51-410-043-B01
D2549020702200

2. Installation of the Side Wall (06Q-1)

(a) Attach the brackets 06Q-013, 06Q-017 to the aft side wall assembly 06Q-010.

(b) Attach the fittings 06Q-020, 06Q-025 with the screws 06Q-030, 06Q-035 to the brackets 06Q-013.

(c) Assemble the post assembly 06Q-260 as follows:

1 Attach the screws 06Q-270.

(d) Attach the post assembly 06Q-260 with the screws 06Q-290, 06Q-310, the washers 06Q-240 and the caps 06Q-300.

(e) Attach the angle 06Q-410 with the screws 06Q-290 and the washers 06Q-240 to the lavatory structure.

(f) Attach the angles 06Q-200 with the screws 06Q-220 and the washers 06Q-240 to the aft side wall assembly 06Q-010.

(g) Attach the oxygen container assy 06Q-210 with the screws 06Q-220 and the washers 06Q-240 to the angles 06Q-200.

(h) Attach the ground cable in accordance with the Process and Material Specification PMS 01-04-58 to the oxygen container assy 06Q-210.

(i) Attach the angle 06Q-170 with the screws 06Q-220 and the washers 06Q-240 to the aft side wall assembly 06Q-010.

(j) Attach the cover oxygen container assy 06Q-160 with the screws 06Q-180 and the nuts 06Q-190 to the angle 06Q-170.

(k) Attach the studs 06Q-250 and the washers 06Q-240 to the cover oxygen container assy 06Q-160.

(l) Attach the screws 06Q-340 to the aft side wall assembly 06Q-010.

(m) Attach the toilet seat cover dispenser 06Q-330 to the screws 06Q-340.

(n) Attach the support 06Q-320 with the screws 06Q-230 and the washers 06Q-241 to the aft side wall assembly 06Q-010.

(o) Install and assemble the handle assembly 06Q-120 as follows:

1 Attach the special screws 06Q-130 and the special washers 06Q-150 to the aft side wall assembly 06Q-010.

2 Attach the handle assembly 06Q-120 to the aft side wall assembly 06Q-010.

3 Attach the security pins 06Q-140 to the handle assembly 06Q-120.

SUB TASK 25-41-51-410-043-C01
D2549010607400 D2549020707600 D2549030601400 D2549030602200 D2549030604400 D2549030608200 R225401160-000

3. Installation of the Side Wall (06Q-1)

(a) Attach the brackets 06Q-013, 06Q-017 to the aft side wall assembly 06Q-010.

(b) Attach the fittings 06Q-020, 06Q-025 with the screws 06Q-030, 06Q-035 to the brackets 06Q-013.

(c) Assemble the post assembly 06Q-260 as follows:

1 Attach the screws 06Q-270.

(d) Attach the post assembly 06Q-260 with the screws 06Q-290, 06Q-310, the washers 06Q-240 and the caps 06Q-300.

(e) Attach the angle 06Q-410 with the screws 06Q-290 and the washers 06Q-240 to the lavatory structure.

(f) Attach the angles 06Q-200 with the screws 06Q-220 and the washers 06Q-240 to the aft side wall assembly 06Q-010.

(g) Attach the oxygen container assy 06Q-210 with the screws 06Q-220, 06Q-222 and the washers 06Q-240 to the angles 06Q-200.

(h) Attach the ground cable in accordance with the Process and Material Specification PMS 01-04-58 to the oxygen container assy 06Q-210.

(i) Attach the angle 06Q-170 with the screws 06Q-220 and the washers 06Q-240 to the aft side wall assembly 06Q-010.

(j) Attach the cover oxygen container assy 06Q-160 with the screws 06Q-180 and the nuts 06Q-190 to the angle 06Q-170.

(k) Attach the studs 06Q-250 and the washers 06Q-240 to the cover oxygen container assy 06Q-160.

(l) Attach the screws 06Q-345 and the washers 06Q-390 to the aft side wall assembly 06Q-010.

(m) Attach the toilet seat cover dispenser 06Q-330 to the screws 06Q-345.

(n) Install and assemble the handle assemblies 06Q-350 as follows:

1 Attach the special screws 06Q-360 and the special washers 06Q-380 to the aft side wall assembly 06Q-010.

2 Attach the handle assemblies 06Q-350 to the aft side wall assembly 06Q-010.

3 Attach the security pins 06Q-370 to the handle assemblies 06Q-350.

SUB TASK 25-41-51-410-043-D01

D2549010603600 D2549020512200 D2549020704800 D2549020705000 D2549020710000 D2549020712400 D2549020712800 D2549030510400 R225401195-000

4. Installation of the Side Wall (06Q-1)

(a) Attach the brackets 06Q-013, 06Q-017 to the aft side wall assembly 06Q-010.

(b) Attach the fittings 06Q-020, 06Q-025 with the screws 06Q-030, 06Q-035 to the brackets 06Q-013.

(c) Assemble the post assembly 06Q-260 as follows:

1 Attach the screws 06Q-270.

(d) Attach the post assembly 06Q-260 with the screws 06Q-290, 06Q-310, the washers 06Q-240 and the caps 06Q-300.

(e) Attach the angle 06Q-410 with the screws 06Q-290 and the washers 06Q-240 to the lavatory structure.

(f) Attach the angles 06Q-200 with the screws 06Q-220 and the washers 06Q-240 to the aft side wall assembly 06Q-010.

(g) Attach the oxygen container assy 06Q-210 with the screws 06Q-220, 06Q-222 and the washers 06Q-240 to the angles 06Q-200.

(h) Attach the ground cable in accordance with the Process and Material Specification PMS 01-04-58 to the oxygen container assy 06Q-210.

(i) Attach the angle 06Q-170 with the screws 06Q-220 and the washers 06Q-240 to the aft side wall assembly 06Q-010.

(j) Attach the cover oxygen container assy 06Q-160 with the screws 06Q-180 and the nuts 06Q-190 to the angle 06Q-170.

(k) Attach the studs 06Q-250 and the washers 06Q-240 to the cover oxygen container assy 06Q-160.

(l) Attach the screws 06Q-340 to the aft side wall assembly 06Q-010.

(m) Attach the toilet seat cover dispenser 06Q-330 to the screws 06Q-340.

(n) Install and assemble the handle assemblies 06Q-350 as follows:

1 Attach the special screws 06Q-360 and the special washers 06Q-380 to the aft side wall assembly 06Q-010.

2 Attach the handle assemblies 06Q-350 to the aft side wall assembly 06Q-010.

3 Attach the security pins 06Q-370 to the handle assemblies 06Q-350.

SUB TASK 25-41-51-410-043-E01
D2549020507800 D2549020708400 D2549020812800

5. Installation of the Side Wall (06Q-1)

(a) Attach the fitting 06Q-020 with the screws 06Q-030, 06Q-035 to the aft side wall assembly 06Q-010.

(b) Assemble the post assembly 06Q-260 as follows:

1 Attach the screws 06Q-270.

(c) Attach the post assembly 06Q-260 with the screws 06Q-290, 06Q-310, the washers 06Q-240 and the caps 06Q-300.

(d) Attach the angle 06Q-410 with the screws 06Q-290 and the washers 06Q-240 to the lavatory structure.

(e) Attach the angles 06Q-200 with the screws 06Q-220 and the washers 06Q-240 to the aft side wall assembly 06Q-010.

(f) Attach the oxygen container assy 06Q-210 with the screws 06Q-220 and the washers 06Q-240 to the angles 06Q-200.

(g) Attach the ground cable in accordance with the Process and Material Specification PMS 01-04-58 to the oxygen container assy 06Q-210.

(h) Attach the angle 06Q-170 with the screws 06Q-220 and the washers 06Q-240 to the aft side wall assembly 06Q-010.

(i) Attach the cover oxygen container assy 06Q-160 with the screws 06Q-180 and the nuts 06Q-190 to the angle 06Q-170.

(j) Attach the studs 06Q-250 and the washers 06Q-240 to the cover oxygen container assy 06Q-160.

(k) Attach the screws 06Q-340 to the aft side wall assembly 06Q-010.

(l) Attach the toilet seat cover dispenser 06Q-330 to the screws 06Q-340.

(m) Install and assemble the handle assemblies 06Q-350 as follows:

1 Attach the special screws 06Q-360 and the special washers 06Q-380 to the aft side wall assembly 06Q-010.

2 Attach the handle assemblies 06Q-350 to the aft side wall assembly 06Q-010.

3 Attach the security pins 06Q-370 to the handle assemblies 06Q-350.

SUB TASK 25-41-51-410-043-F01
D2549020507600 D2549020707200 D2549020708600

6. Installation of the Side Wall (06Q-1)

(a) Attach the brackets 06Q-013, 06Q-017 to the aft side wall assembly 06Q-010.

(b) Attach the fittings 06Q-020, 06Q-025 with the screws 06Q-030, 06Q-035 to the brackets 06Q-013.

(c) Assemble the post assembly 06Q-260 as follows:

1 Attach the screws 06Q-270.

(d) Attach the post assembly 06Q-260 with the screws 06Q-290, 06Q-310, the washers 06Q-240 and the caps 06Q-300.

(e) Attach the angle 06Q-410 with the screws 06Q-290 and the washers 06Q-240 to the lavatory structure.

(f) Attach the angles 06Q-200 with the screws 06Q-220 and the washers 06Q-240 to the aft side wall assembly 06Q-010.

(g) Attach the oxygen container assy 06Q-210 with the screws 06Q-220 and the washers 06Q-240 to the angles 06Q-200.

(h) Attach the ground cable in accordance with the Process and Material Specification PMS 01-04-58 to the oxygen container assy 06Q-210.

(i) Attach the angle 06Q-170 with the screws 06Q-220 and the washers 06Q-240 to the aft side wall assembly 06Q-010.

(j) Attach the cover oxygen container assy 06Q-160 with the screws 06Q-180 and the nuts 06Q-190 to the angle 06Q-170.

(k) Attach the studs 06Q-250 and the washers 06Q-240 to the cover oxygen container assy 06Q-160.

(l) Install and assemble the handle assemblies 06Q-350 as follows:

1 Attach the special screws 06Q-360 and the special washers 06Q-380 to the aft side wall assembly 06Q-010.

2 Attach the handle assemblies 06Q-350 to the aft side wall assembly 06Q-010.

3 Attach the security pins 06Q-370 to the handle assemblies 06Q-350.

SUB TASK 25-41-51-410-043-G01
D2549010600800 D2549020502200 D2549020511000 D2549020710800 D2549020713400

7. Installation of the Side Wall (06Q-1)

(a) Attach the brackets 06Q-013, 06Q-017 to the aft side wall assembly 06Q-010.

(b) Attach the fittings 06Q-020, 06Q-025 with the screws 06Q-030, 06Q-035 to the brackets 06Q-013.

(c) Assemble the post assembly 06Q-260 as follows:

1 Attach the screws 06Q-270.

(d) Attach the post assembly 06Q-260 with the screws 06Q-290, 06Q-310, the washers 06Q-240 and the caps 06Q-300.

(e) Attach the angle 06Q-410 with the screws 06Q-290 and the washers 06Q-240 to the lavatory structure.

(f) Attach the angles 06Q-200 with the screws 06Q-220 and the washers 06Q-240 to the aft side wall assembly 06Q-010.

(g) Attach the oxygen container assy 06Q-210 with the screws 06Q-220 and the washers 06Q-240 to the angles 06Q-200.

(h) Attach the ground cable in accordance with the Process and Material Specification PMS 01-04-58 to the oxygen container assy 06Q-210.

(i) Attach the angle 06Q-170 with the screws 06Q-220 and the washers 06Q-240 to the aft side wall assembly 06Q-010.

(j) Attach the cover oxygen container assy 06Q-160 with the screws 06Q-180 and the nuts 06Q-190 to the angle 06Q-170.

(k) Attach the studs 06Q-250 and the washers 06Q-240 to the cover oxygen container assy 06Q-160.

(l) Install and assemble the handle assemblies 06Q-350 as follows:

1 Attach the special screws 06Q-360 and the special washers 06Q-380 to the aft side wall assembly 06Q-010.

2 Attach the handle assemblies 06Q-350 to the aft side wall assembly 06Q-010.

3 Attach the security pins 06Q-370 to the handle assemblies 06Q-350.

TASK 25-41-51-400-819-S01
D2549010605600 D2549010609800 D2549010611800 D2549020404800 D2549020405000 D2549020514800 D2549020805000 D2549020808200 D2549020809800 D2549020814200 D2549030602400 D2549030606400

200. Installation of the Side Wall

A. General

This task gives you the installation and assembly procedures of the component.

B. Job Set-up Information

(1) Not applicable

C. Procedure

WARNING: BE CAREFUL WHEN YOU USE SOLVENTS/CLEANING AGENTS, SEALANTS AND OTHER MATERIALS. OBEY THE MATERIAL MANUFACTURER'S INSTRUCTIONS AND THE LOCAL REGULATIONS. MAKE SURE THAT THERE IS A GOOD FLOW OF AIR THROUGH THE WORK AREA. DO NOT BREATHE THE FUMES. DO NOT SMOKE. DO NOT USE THESE MATERIALS NEAR A FLAME, SPARKS OR SOURCES OF HEAT. USE PROTECTIVE CLOTHING, GOGGLES AND GLOVES. IF YOU GET ONE OF THESE MATERIALS ON YOUR SKIN OR IN YOUR EYES, FLUSH IT AWAY WITH A FLOW OF CLEAN WATER. IF YOU GET ONE OF THESE MATERIALS IN YOUR MOUTH, GET IMMEDIATE MEDICAL AID. IN GENERAL, THESE MATERIALS ARE POISONOUS, FLAMMABLE AND SKIN IRRITANTS.

WARNING: KEEP ALL HYDROCARBONS (FUELS, LUBRICANTS, ETC.) AWAY FROM ALL SOURCES OF OXYGEN. OXYGEN BECOMES EXPLOSIVE WHEN IT TOUCHES HYDROCARBONS.

WARNING: TO PREVENT CONTAMINATION OF THE OXYGEN SYSTEM, MAKE SURE THAT YOUR HANDS AND ALL THE TOOLS ARE CLEAN.

CAUTION: DO ALL THE WORK ON A CLEAN, SOFT SURFACE TO PREVENT DAMAGE TO THE COMPONENTS.

CAUTION: MAKE SURE THAT ALL THE PARTS ARE CLEAN BEFORE YOU ASSEMBLE THEM.

SUB TASK 25-41-51-410-044-A01
D2549010605600 D2549030602400 D2549030606400

1. Installation of the Side Wall (06R-1)

(a) Attach the brackets 06R-013, 06R-017 to the aft side wall assembly 06R-010.

(b) Attach the fittings 06R-020 with the screws 06R-030 to the brackets 06R-013.

(c) Assemble the post assembly 06R-250 as follows:

1 Attach the screws 06R-260.

(d) Attach the post assembly 06R-250 with the screws 06R-280, 06R-300, the washers 06R-230 and the caps 06R-290.

(e) Attach the angles 06R-200 with the screws 06R-220 and the washers 06R-230 to the aft side wall assembly 06R-010.

(f) Attach the oxygen container assy 06R-210 with the screws 06R-220 and the washers 06R-230 to the angles 06R-200.

(g) Attach the ground cable in accordance with the Process and Material Specification PMS 01-04-58 to the oxygen container assy 06R-210.

(h) Attach the angle 06R-170 with the screws 06R-220 and the washers 06R-230 to the aft side wall assembly 06R-010.

(i) Attach the cover oxygen container assy 06R-160 with the screws 06R-180 and the nuts 06R-190 to the angle 06R-170.

(j) Attach the studs 06R-240 and the washers 06R-230 to the cover oxygen container assy 06R-160.

(k) Attach the lavatory picture frame kit 06R-310 with the screws 06R-320 to the aft side wall assembly 06R-010.

(l) Install and assemble the handle assemblies 06R-120 as follows:

1 Attach the special screws 06R-130 and the special washers 06R-150 to the aft side wall assembly 06R-010.

2 Attach the handle assemblies 06R-120 to the aft side wall assembly 06R-010.

3 Attach the security pins 06R-140 to the handle assemblies 06R-120.

SUB TASK 25-41-51-410-044-B01
D2549010609800

2. Installation of the Side Wall (06R-1)

(a) Attach the fittings 06R-020 with the screws 06R-030 to the aft side wall assembly 06R-010.

(b) Assemble the post assembly 06R-250 as follows:

1 Attach the screws 06R-260.

(c) Attach the post assembly 06R-250 with the screws 06R-280, 06R-300, the washers 06R-230 and the caps 06R-290.

(d) Attach the angle 06R-380 with the screws 06R-390 and the washers 06R-400 to the aft side wall assembly 06R-010.

(e) Attach the angles 06R-200 with the screws 06R-220 and the washers 06R-230 to the aft side wall assembly 06R-010.

(f) Attach the oxygen container assy 06R-210 with the screws 06R-220 and the washers 06R-230 to the angles 06R-200.

(g) Attach the ground cable in accordance with the Process and Material Specification PMS 01-04-58 to the oxygen container assy 06R-210.

(h) Attach the angle 06R-170 with the screws 06R-220 and the washers 06R-230 to the aft side wall assembly 06R-010.

(i) Attach the cover oxygen container assy 06R-160 with the screws 06R-180 and the nuts 06R-190 to the angle 06R-170.

(j) Attach the studs 06R-240 and the washers 06R-230 to the cover oxygen container assy 06R-160.

(k) Attach the lavatory picture frame kit 06R-310 with the screws 06R-320 to the aft side wall assembly 06R-010.

(l) Attach the support 06R-330 with the screws 06R-410 and the washers 06R-231 to the aft side wall assembly 06R-010.

(m) Install and assemble the handle assembly 06R-340 as follows:

1 Attach the special screws 06R-350 and the special washers 06R-370 to the aft side wall assembly 06R-010.

2 Attach the handle assembly 06R-340 to the aft side wall assembly 06R-010.

3 Attach the security pins 06R-360 to the handle assembly 06R-340.

SUB TASK 25-41-51-410-044-C01
D2549020404800 D2549020405000 D2549020514800 D2549020805000 D2549020808200 D2549020809800 D2549020814200

3. Installation of the Side Wall (06R-1)

(a) Attach the fittings 06R-020 with the screws 06R-030 to the aft side wall assembly 06R-010.

(b) Assemble the post assembly 06R-250 as follows:

1 Attach the screws 06R-260.

(c) Attach the post assembly 06R-250 with the screws 06R-280, 06R-300, the washers 06R-230 and the caps 06R-290.

(d) Attach the angle 06R-380 with the screws 06R-390 and the washers 06R-400 to the aft side wall assembly 06R-010.

(e) Attach the angles 06R-200 with the screws 06R-220 and the washers 06R-230 to the aft side wall assembly 06R-010.

(f) Attach the oxygen container assy 06R-210 with the screws 06R-220 and the washers 06R-230 to the angles 06R-200.

(g) Attach the ground cable in accordance with the Process and Material Specification PMS 01-04-58 to the oxygen container assy 06R-210.

(h) Attach the angle 06R-170 with the screws 06R-220 and the washers 06R-230 to the aft side wall assembly 06R-010.

(i) Attach the cover oxygen container assy 06R-160 with the screws 06R-180 and the nuts 06R-190 to the angle 06R-170.

(j) Attach the studs 06R-240 and the washers 06R-230 to the cover oxygen container assy 06R-160.

(k) Attach the lavatory picture frame kit 06R-310 with the screws 06R-320 to the aft side wall assembly 06R-010.

(l) Install and assemble the handle assemblies 06R-120 as follows:

1 Attach the special screws 06R-130 and the special washers 06R-150 to the aft side wall assembly 06R-010.

2 Attach the handle assemblies 06R-120 to the aft side wall assembly 06R-010.

3 Attach the security pins 06R-140 to the handle assemblies 06R-120.

SUB TASK 25-41-51-410-044-D01
D2549010611800

4. Installation of the Side Wall (06R-1)

(a) Assemble the post assembly 06R-250 as follows:

1 Attach the screws 06R-260.

(b) Attach the post assembly 06R-250 with the screws 06R-280, 06R-300, the washers 06R-230 and the caps 06R-290.

(c) Attach the angle 06R-380 with the screws 06R-390 and the washers 06R-400 to the aft side wall assembly 06R-010.

(d) Attach the angles 06R-200 with the screws 06R-220 and the washers 06R-230 to the aft side wall assembly 06R-010.

(e) Attach the oxygen container assy 06R-210 with the screws 06R-220 and the washers 06R-230 to the angles 06R-200.

(f) Attach the ground cable in accordance with the Process and Material Specification PMS 01-04-58 to the oxygen container assy 06R-210.

(g) Attach the angle 06R-170 with the screws 06R-220 and the washers 06R-230 to the aft side wall assembly 06R-010.

(h) Attach the cover oxygen container assy 06R-160 with the screws 06R-180 and the nuts 06R-190 to the angle 06R-170.

(i) Attach the studs 06R-240 and the washers 06R-230 to the cover oxygen container assy 06R-160.

(j) Attach the lavatory picture frame kit 06R-310 with the screws 06R-320 to the aft side wall assembly 06R-010.

(k) Install and assemble the handle assemblies 06R-120 as follows:

1 Attach the special screws 06R-130 and the special washers 06R-150 to the aft side wall assembly 06R-010.

2 Attach the handle assemblies 06R-120 to the aft side wall assembly 06R-010.

3 Attach the security pins 06R-140 to the handle assemblies 06R-120.

TASK 25-41-51-400-819-T01
D2549020712000 D2549020712600

201. Installation of the Side Wall

A. General

This task gives you the installation and assembly procedures of the component.

B. Procedure

WARNING: **BE CAREFUL WHEN YOU USE SOLVENTS/CLEANING AGENTS, SEALANTS AND OTHER MATERIALS. OBEY THE MATERIAL MANUFACTURER'S INSTRUCTIONS AND THE LOCAL REGULATIONS. MAKE SURE THAT THERE IS A GOOD FLOW OF AIR THROUGH THE WORK AREA. DO NOT BREATHE THE FUMES. DO NOT SMOKE. DO NOT USE THESE MATERIALS NEAR A FLAME, SPARKS OR SOURCES OF HEAT. USE PROTECTIVE CLOTHING, GOGGLES AND GLOVES. IF YOU GET ONE OF THESE MATERIALS ON YOUR SKIN OR IN YOUR EYES, FLUSH IT AWAY WITH A FLOW OF CLEAN WATER. IF YOU GET ONE OF THESE MATERIALS IN YOUR MOUTH, GET IMMEDIATE MEDICAL AID. IN GENERAL, THESE MATERIALS ARE POISONOUS, FLAMMABLE AND SKIN IRRITANTS.**

CAUTION: **DO ALL THE WORK ON A CLEAN, SOFT SURFACE TO PREVENT DAMAGE TO THE COMPONENTS.**

CAUTION: **MAKE SURE THAT ALL THE PARTS ARE CLEAN BEFORE YOU ASSEMBLE THEM.**

SUB TASK 25-41-51-410-045-A01
1. Installation of the Side Wall (06S-1)

(a) Attach the brackets 06S-013, 06S-017 to the aft side wall assembly 06S-010.

(b) Attach the fittings 06S-020 with the screws 06S-030 to the brackets 06S-013.

(c) Assemble the post assembly 06S-200 as follows:

1 Attach the screws 06S-210.

(d) Attach the post assembly 06S-200 with the screws 06S-230, 06S-250, the washers 06S-180 and the caps 06S-240.

(e) Attach the angles 06S-160 with the screws 06S-170 and the washers 06S-180 to the aft side wall assembly 06S-010.

(f) Attach the angle 06S-130 with the screws 06S-170 and the washers 06S-180 to the aft side wall assembly 06S-010.

(g) Attach the cover oxygen container assy 06S-120 with the screws 06S-140 and the nuts 06S-150 to the angle 06S-130.

(h) Attach the studs 06S-190 and the washers 06S-180 to the cover oxygen container assy 06S-120.

(i) Attach the bracket 06S-300 with the screws 06S-310 to the aft side wall assembly 06S-010.

(j) Attach the wardrobe-rail 06S-320 to the bracket 06S-300.

(k) Attach the L-angles 06S-260 with the screws 06S-270 and the washers 06S-280 to the aft side wall assembly 06S-010.

(l) Attach the overhead storage compartment assembly 06S-290 with the screws 06S-270 and the washers 06S-280 to the aft side wall assembly 06S-010.

TASK 25-41-51-400-819-U01

D2549010605200 D2549010606600 D2549020507400 D2549020509600 D2549020509800 D2549020511600 D2549020513000 D2549020606400 D2549020701600 D2549020705800 D2549020713600 D2549020714600 D2549030513200 D2549030600200 D2549030609000 D2549030610200 R225401115-000 R225401605-000 R225401613-000

202. Installation of the Side Wall

A. General

This task gives you the installation and assembly procedures of the component.

B. Job Set-up Information

(1) Not applicable

C. Procedure

WARNING: BE CAREFUL WHEN YOU USE SOLVENTS/CLEANING AGENTS, SEALANTS AND OTHER MATERIALS. OBEY THE MATERIAL MANUFACTURER'S INSTRUCTIONS AND THE LOCAL REGULATIONS. MAKE SURE THAT THERE IS A GOOD FLOW OF AIR THROUGH THE WORK AREA. DO NOT BREATHE THE FUMES. DO NOT SMOKE. DO NOT USE THESE MATERIALS NEAR A FLAME, SPARKS OR SOURCES OF HEAT. USE PROTECTIVE CLOTHING, GOGGLES AND GLOVES. IF YOU GET ONE OF THESE MATERIALS ON YOUR SKIN OR IN YOUR EYES, FLUSH IT AWAY WITH A FLOW OF CLEAN WATER. IF YOU GET ONE OF THESE MATERIALS IN YOUR MOUTH, GET IMMEDIATE MEDICAL AID. IN GENERAL, THESE MATERIALS ARE POISONOUS, FLAMMABLE AND SKIN IRRITANTS.

WARNING: KEEP ALL HYDROCARBONS (FUELS, LUBRICANTS, ETC.) AWAY FROM ALL SOURCES OF OXYGEN. OXYGEN BECOMES EXPLOSIVE WHEN IT TOUCHES HYDROCARBONS.

WARNING: TO PREVENT CONTAMINATION OF THE OXYGEN SYSTEM, MAKE SURE THAT YOUR HANDS AND ALL THE TOOLS ARE CLEAN.

CAUTION: DO ALL THE WORK ON A CLEAN, SOFT SURFACE TO PREVENT DAMAGE TO THE COMPONENTS.

CAUTION: MAKE SURE THAT ALL THE PARTS ARE CLEAN BEFORE YOU ASSEMBLE THEM.

SUB TASK 25-41-51-410-046-A01
D2549020509800 D2549020714600 R225401605-000

1. Installation of the Side Wall (06T-1)

   (a) Attach the brackets 06T-013, 06T-017, 06T-019 to the aft side wall assembly 06T-010.

   (b) Attach the fittings 06T-020 with the screws 06T-030 to the brackets 06T-013.

   (c) Assemble the post assembly 06T-250 as follows:

      1 Attach the screws 06T-260.

   (d) Attach the post assembly 06T-250 with the screws 06T-280, 06T-300, the washers 06T-230 and the caps 06T-290.

   (e) Attach the angles 06T-200 with the screws 06T-220 and the washers 06T-230 to the aft side wall assembly 06T-010.

   (f) Attach the oxygen container assy 06T-210 with the screws 06T-220 and the washers 06T-230 to the angles 06T-200.

   (g) Attach the ground cable in accordance with the Process and Material Specification PMS 01-04-58 to the oxygen container assy 06T-210.

   (h) Attach the angle 06T-170 with the screws 06T-220 and the washers 06T-230 to the aft side wall assembly 06T-010.

   (i) Attach the cover oxygen container assy 06T-160 with the screws 06T-180 and the nuts 06T-190 to the angle 06T-170.

   (j) Attach the studs 06T-240 and the washers 06T-230 to the cover oxygen container assy 06T-160.

   (k) Attach the coat hook 06T-380 with the screw 06T-390.

   (l) Install and assemble the handle assemblies 06T-120 as follows:

      1 Attach the special screws 06T-130 and the special washers 06T-150 to the aft side wall assembly 06T-010.

      2 Attach the handle assemblies 06T-120 to the aft side wall assembly 06T-010.

3 Attach the security pins 06T-140 to the handle assemblies 06T-120.

SUB TASK 25-41-51-410-046-B01
D2549030609000

2. Installation of the Side Wall (06T-1)

(a) Attach the brackets 06T-013, 06T-017 to the aft side wall assembly 06T-010.

(b) Attach the fittings 06T-020 with the screws 06T-030 to the brackets 06T-013.

(c) Assemble the post assembly 06T-250 as follows:

1 Attach the screws 06T-260.

(d) Attach the post assembly 06T-250 with the screws 06T-280, 06T-300, the washers 06T-230 and the caps 06T-290.

(e) Attach the angle 06T-420 with the screws 06T-440, 06T-460 and the washers 06T-430 to the aft side wall assembly 06T-010.

(f) Attach the angles 06T-200 with the screws 06T-220 and the washers 06T-230 to the aft side wall assembly 06T-010.

(g) Attach the oxygen container assy 06T-210 with the screws 06T-220 and the washers 06T-230 to the angles 06T-200.

(h) Attach the ground cable in accordance with the Process and Material Specification PMS 01-04-58 to the oxygen container assy 06T-210.

(i) Attach the angle 06T-170 with the screws 06T-220 and the washers 06T-230 to the aft side wall assembly 06T-010.

(j) Attach the cover oxygen container assy 06T-160 with the screws 06T-180 and the nuts 06T-190 to the angle 06T-170.

(k) Attach the studs 06T-240 and the washers 06T-230 to the cover oxygen container assy 06T-160.

(l) Attach the screws 06T-320 to the aft side wall assembly 06T-010.

(m) Attach the toilet seat cover dispenser 06T-310 to the screws 06T-320.

(n) Attach the support 06T-330 with the screws 06T-281 and the washers 06T-231 to the aft side wall assembly 06T-010.

(o) Install and assemble the handle assembly 06T-340 as follows:

1 Attach the special screws 06T-350 and the special washers 06T-370 to the aft side wall assembly 06T-010.

2 Attach the handle assembly 06T-340 to the aft side wall assembly 06T-010.

3 Attach the security pins 06T-360 to the handle assembly 06T-340.

SUB TASK 25-41-51-410-046-C01
D2549020509600 D2549020513000 D2549020701600 D2549020705800 R225401613-000

3. Installation of the Side Wall (06T-1)

(a) Attach the brackets 06T-013, 06T-017 to the aft side wall assembly 06T-010.

(b) Attach the fittings 06T-020 with the screws 06T-030 to the brackets 06T-013.

(c) Assemble the post assembly 06T-250 as follows:

1 Attach the screws 06T-260.

(d) Attach the post assembly 06T-250 with the screws 06T-280, 06T-300, the washers 06T-230 and the caps 06T-290.

(e) Attach the angles 06T-200 with the screws 06T-220 and the washers 06T-230 to the aft side wall assembly 06T-010.

(f) Attach the oxygen container assy 06T-210 with the screws 06T-220, 06T-222 and the washers 06T-230 to the angles 06T-200.

(g) Attach the ground cable in accordance with the Process and Material Specification PMS 01-04-58 to the oxygen container assy 06T-210.

(h) Attach the angle 06T-170 with the screws 06T-220 and the washers 06T-230 to the aft side wall assembly 06T-010.

(i) Attach the cover oxygen container assy 06T-160 with the screws 06T-180 and the nuts 06T-190 to the angle 06T-170.

(j) Attach the studs 06T-240 and the washers 06T-230 to the cover oxygen container assy 06T-160.

(k) Attach the screws 06T-320 to the aft side wall assembly 06T-010.

(l) Attach the toilet seat cover dispenser 06T-310 to the screws 06T-320.

(m) Install and assemble the handle assemblies 06T-120 as follows:

1 Attach the special screws 06T-130 and the special washers 06T-150 to the aft side wall assembly 06T-010.

2 Attach the handle assemblies 06T-120 to the aft side wall assembly 06T-010.

3 Attach the security pins 06T-140 to the handle assemblies 06T-120.

SUB TASK 25-41-51-410-046-D01
D2549030610200

4. Installation of the Side Wall (06T-1)

(a) Attach the brackets 06T-013, 06T-017 to the aft side wall assembly 06T-010.

(b) Attach the fittings 06T-020 with the screws 06T-030 to the brackets 06T-013.

(c) Assemble the post assembly 06T-250 as follows:

1 Attach the screws 06T-260.

(d) Attach the post assembly 06T-250 with the screws 06T-280, 06T-300, the washers 06T-230 and the caps 06T-290.

(e) Attach the angles 06T-200 with the screws 06T-220 and the washers 06T-230 to the aft side wall assembly 06T-010.

(f) Attach the oxygen container assy 06T-210 with the screws 06T-220 and the washers 06T-230 to the angles 06T-200.

(g) Attach the ground cable in accordance with the Process and Material Specification PMS 01-04-58 to the oxygen container assy 06T-210.

(h) Attach the angle 06T-170 with the screws 06T-220 and the washers 06T-230 to the aft side wall assembly 06T-010.

(i) Attach the cover oxygen container assy 06T-160 with the screws 06T-180 and the nuts 06T-190 to the angle 06T-170.

(j) Attach the studs 06T-240 and the washers 06T-230 to the cover oxygen container assy 06T-160.

(k) Attach the screws 06T-320 to the aft side wall assembly 06T-010.

(l) Attach the toilet seat cover dispenser 06T-310 to the screws 06T-320.

(m) Install and assemble the handle assemblies 06T-120 as follows:

1 Attach the special screws 06T-130 and the special washers 06T-150 to the aft side wall assembly 06T-010.

2 Attach the handle assemblies 06T-120 to the aft side wall assembly 06T-010.

3 Attach the security pins 06T-140 to the handle assemblies 06T-120.

SUB TASK 25-41-51-410-046-E01
D2549010605200 D2549010606600 D2549030513200

5. Installation of the Side Wall (06T-1)

(a) Attach the brackets 06T-013, 06T-017 to the aft side wall assembly 06T-010.

(b) Attach the fittings 06T-020 with the screws 06T-030 to the brackets 06T-013.

(c) Assemble the post assembly 06T-250 as follows:

1 Attach the screws 06T-260.

(d) Attach the post assembly 06T-250 with the screws 06T-280, 06T-300, the washers 06T-230 and the caps 06T-290.

(e) Attach the angles 06T-200 with the screws 06T-220 and the washers 06T-230 to the aft side wall assembly 06T-010.

(f) Attach the oxygen container assy 06T-210 with the screws 06T-220 and the washers 06T-230 to the angles 06T-200.

(g) Attach the ground cable in accordance with the Process and Material Specification PMS 01-04-58 to the oxygen container assy 06T-210.

(h) Attach the angle 06T-170 with the screws 06T-220 and the washers 06T-230 to the aft side wall assembly 06T-010.

(i) Attach the cover oxygen container assy 06T-160 with the screws 06T-180 and the nuts 06T-190 to the angle 06T-170.

(j) Attach the studs 06T-240 and the washers 06T-230 to the cover oxygen container assy 06T-160.

(k) Attach the screws 06T-320 to the aft side wall assembly 06T-010.

(l) Attach the toilet seat cover dispenser 06T-310 to the screws 06T-320.

(m) Attach the support 06T-330 with the screws 06T-281 and the washers 06T-231 to the aft side wall assembly 06T-010.

(n) Install and assemble the handle assembly 06T-340 as follows:

1 Attach the special screws 06T-350 and the special washers 06T-370 to the aft side wall assembly 06T-010.

2 Attach the handle assembly 06T-340 to the aft side wall assembly 06T-010.

3 Attach the security pins 06T-360 to the handle assembly 06T-340.

SUB TASK 25-41-51-410-046-F01
D2549030600200

6. Installation of the Side Wall (06T-1)

(a) Attach the brackets 06T-013, 06T-017 to the aft side wall assembly 06T-010.

(b) Attach the fittings 06T-020 with the screws 06T-030 to the brackets 06T-013.

(c) Assemble the post assembly 06T-250 as follows:

1 Attach the screws 06T-260.

(d) Attach the post assembly 06T-250 with the screws 06T-280, 06T-300, the washers 06T-230 and the caps 06T-290.

(e) Attach the angles 06T-200 with the screws 06T-220 and the washers 06T-230 to the aft side wall assembly 06T-010.

(f) Attach the oxygen container assy 06T-210 with the screws 06T-220 and the washers 06T-230 to the angles 06T-200.

(g) Attach the ground cable in accordance with the Process and Material Specification PMS 01-04-58 to the oxygen container assy 06T-210.

(h) Attach the angle 06T-170 with the screws 06T-220 and the washers 06T-230 to the aft side wall assembly 06T-010.

(i) Attach the cover oxygen container assy 06T-160 with the screws 06T-180 and the nuts 06T-190 to the angle 06T-170.

(j) Attach the studs 06T-240 and the washers 06T-230 to the cover oxygen container assy 06T-160.

(k) Attach the screws 06T-320 to the aft side wall assembly 06T-010.

(l) Attach the toilet seat cover dispenser 06T-310 to the screws 06T-320.

(m) Attach the support 06T-330 with the screws 06T-281 and the washers 06T-231 to the aft side wall assembly 06T-010.

(n) Install and assemble the handle assembly 06T-340 as follows:

1 Attach the special screws 06T-350 and the special washers 06T-370 to the aft side wall assembly 06T-010.

2 Attach the handle assembly 06T-340 to the aft side wall assembly 06T-010.

3 Attach the security pins 06T-360 to the handle assembly 06T-340.

SUB TASK 25-41-51-410-046-G01
D2549020713600

7. Installation of the Side Wall (06T-1)

(a) Attach the brackets 06T-013, 06T-017 to the aft side wall assembly 06T-010.

(b) Attach the fittings 06T-020 with the screws 06T-030 to the brackets 06T-013.

(c) Assemble the post assembly 06T-250 as follows:

1 Attach the screws 06T-260.

(d) Attach the post assembly 06T-250 with the screws 06T-280, 06T-300, the washers 06T-230 and the caps 06T-290.

(e) Attach the angles 06T-200 with the screws 06T-220 and the washers 06T-230 to the aft side wall assembly 06T-010.

(f) Attach the oxygen container assy 06T-210 with the screws 06T-220 and the washers 06T-230 to the angles 06T-200.

(g) Attach the ground cable in accordance with the Process and Material Specification PMS 01-04-58 to the oxygen container assy 06T-210.

(h) Attach the angle 06T-170 with the screws 06T-220 and the washers 06T-230 to the aft side wall assembly 06T-010.

(i) Attach the cover oxygen container assy 06T-160 with the screws 06T-180 and the nuts 06T-190 to the angle 06T-170.

(j) Attach the studs 06T-240 and the washers 06T-230 to the cover oxygen container assy 06T-160.

(k) Install and assemble the handle assemblies 06T-120 as follows:

1 Attach the special screws 06T-130 and the special washers 06T-150 to the aft side wall assembly 06T-010.

2 Attach the handle assemblies 06T-120 to the aft side wall assembly 06T-010.

3 Attach the security pins 06T-140 to the handle assemblies 06T-120.

SUB TASK 25-41-51-410-046-H01
D2549020511600 D2549020606400

8. Installation of the Side Wall (06T-1)

(a) Attach the brackets 06T-013, 06T-017 to the aft side wall assembly 06T-010.

(b) Attach the fittings 06T-020 with the screws 06T-030 to the brackets 06T-013.

(c) Assemble the post assembly 06T-250 as follows:

1 Attach the screws 06T-260.

(d) Attach the post assembly 06T-250 with the screws 06T-280, 06T-300, the washers 06T-230 and the caps 06T-290.

(e) Attach the angles 06T-200 with the screws 06T-220 and the washers 06T-230 to the aft side wall assembly 06T-010.

(f) Attach the oxygen container assy 06T-210 with the screws 06T-220 and the washers 06T-230 to the angles 06T-200.

(g) Attach the ground cable in accordance with the Process and Material Specification PMS 01-04-58 to the oxygen container assy 06T-210.

(h) Attach the angle 06T-170 with the screws 06T-220 and the washers 06T-230 to the aft side wall assembly 06T-010.

(i) Attach the cover oxygen container assy 06T-160 with the screws 06T-180 and the nuts 06T-190 to the angle 06T-170.

(j) Attach the studs 06T-240 and the washers 06T-230 to the cover oxygen container assy 06T-160.

(k) Install and assemble the handle assemblies 06T-120 as follows:

1 Attach the special screws 06T-130 and the special washers 06T-150 to the aft side wall assembly 06T-010.

2 Attach the handle assemblies 06T-120 to the aft side wall assembly 06T-010.

3 Attach the security pins 06T-140 to the handle assemblies 06T-120.

SUB TASK 25-41-51-410-046-J01
D2549020507400 R225401115-000

9. Installation of the Side Wall (06T-1)

(a) Attach the brackets 06T-013, 06T-017 to the aft side wall assembly 06T-010.

(b) Attach the fittings 06T-020 with the screws 06T-030 to the brackets 06T-013.

(c) Assemble the post assembly 06T-250 as follows:

1 Attach the screws 06T-260.

(d) Attach the post assembly 06T-250 with the screws 06T-280, 06T-300, the washers 06T-230 and the caps 06T-290.

(e) Attach the angles 06T-200 with the screws 06T-220 and the washers 06T-230 to the aft side wall assembly 06T-010.

(f) Attach the oxygen container assy 06T-210 with the screws 06T-220, 06T-222 and the washers 06T-230 to the angles 06T-200.

(g) Attach the ground cable in accordance with the Process and Material Specification PMS 01-04-58 to the oxygen container assy 06T-210.

(h) Attach the angle 06T-170 with the screws 06T-220 and the washers 06T-230 to the aft side wall assembly 06T-010.

(i) Attach the cover oxygen container assy 06T-160 with the screws 06T-180 and the nuts 06T-190 to the angle 06T-170.

(j) Attach the studs 06T-240 and the washers 06T-230 to the cover oxygen container assy 06T-160.

(k) Attach the support 06T-330 with the screws 06T-281 and the washers 06T-231 to the aft side wall assembly 06T-010.

(l) Install and assemble the handle assembly 06T-340 as follows:

1 Attach the special screws 06T-350 and the special washers 06T-370 to the aft side wall assembly 06T-010.

2 Attach the handle assembly 06T-340 to the aft side wall assembly 06T-010.

3 Attach the security pins 06T-360 to the handle assembly 06T-340.

TASK 25-41-51-400-819-V01
D2549010606800 D2549010607000 D2549010609000 D2549020505600 D2549020510000 D2549020801000 D2549020803600 D2549030400200 D2549030400400 D2549030403800 D2549030606800 D2549030608000 D2549030609800 D2549030611000 D2549030612800 D2549030613400 D2549030614200 D2549030614400 R225401134-012 R225401134-028 R225401172-000 R225401192-000 R225401614-000 R225401618-000 R225401618-002 R225401625-000

203. Installation of the Side Wall

A. General

This task gives you the installation and assembly procedures of the component.

B. Job Set-up Information
(1) Consumable Materials

REFERENCE	DESIGNATION
08-007	Sealant, High Temperature

Table 7028
Consumable Materials

C. Procedure

WARNING: **BE CAREFUL WHEN YOU USE SOLVENTS/CLEANING AGENTS, SEALANTS AND OTHER MATERIALS. OBEY THE MATERIAL MANUFACTURER'S INSTRUCTIONS AND THE LOCAL REGULATIONS. MAKE SURE THAT THERE IS A GOOD FLOW OF AIR THROUGH THE WORK AREA. DO NOT BREATHE THE FUMES. DO NOT SMOKE. DO NOT USE THESE MATERIALS NEAR A FLAME, SPARKS OR SOURCES OF HEAT. USE PROTECTIVE CLOTHING, GOGGLES AND GLOVES. IF YOU GET ONE OF THESE MATERIALS ON YOUR SKIN OR IN YOUR EYES, FLUSH IT AWAY WITH A FLOW OF CLEAN WATER. IF YOU GET ONE OF THESE MATERIALS IN YOUR MOUTH, GET IMMEDIATE MEDICAL AID. IN GENERAL, THESE MATERIALS ARE POISONOUS, FLAMMABLE AND SKIN IRRITANTS.**

WARNING: **KEEP ALL HYDROCARBONS (FUELS, LUBRICANTS, ETC.) AWAY FROM ALL SOURCES OF OXYGEN. OXYGEN BECOMES EXPLOSIVE WHEN IT TOUCHES HYDROCARBONS.**

WARNING: **TO PREVENT CONTAMINATION OF THE OXYGEN SYSTEM, MAKE SURE THAT YOUR HANDS AND ALL THE TOOLS ARE CLEAN.**

CAUTION: **DO ALL THE WORK ON A CLEAN, SOFT SURFACE TO PREVENT DAMAGE TO THE COMPONENTS.**

CAUTION: **MAKE SURE THAT ALL THE PARTS ARE CLEAN BEFORE YOU ASSEMBLE THEM.**

SUB TASK 25-41-51-410-047-A01
D2549010609000

1. Installation of the Side Wall (06U-1)

   (a) Attach the fittings 06U-020 with the screws 06U-030 to the aft side wall assembly 06U-010.

   (b) Assemble the post assembly 06U-250 as follows:

      1 Attach the screws 06U-253.

   (c) Attach the post assembly 06U-250 with the screws 06U-260, 06U-280, the washers 06U-230 and the caps 06U-270.

   (d) Attach the angle 06U-370 with the screws 06U-380 and the washers 06U-390 to the aft side wall assembly 06U-010.

   (e) Attach the angles 06U-200 with the screws 06U-220 and the washers 06U-230 to the aft side wall assembly 06U-010.

   (f) Attach the oxygen container assy 06U-210 with the screws 06U-220 and the washers 06U-230 to the angles 06U-200.

   (g) Attach the ground cable in accordance with the Process and Material Specification PMS 01-04-58 to the oxygen container assy 06U-210.

   (h) Attach the angle 06U-170 with the screws 06U-220 and the washers 06U-230 to the aft side wall assembly 06U-010.

   (i) Attach the cover oxygen container assy 06U-160 with the screws 06U-180 and the nuts 06U-190 to the angle 06U-170.

   (j) Attach the studs 06U-240 and the washers 06U-230 to the cover oxygen container assy 06U-160.

   (k) Attach the screws 06U-305 and the washers 06U-360 to the aft side wall assembly 06U-010.

   (l) Attach the toilet seat cover dispenser 06U-290 to the screws 06U-305.

(m) Install and assemble the handle assemblies 06U-120 as follows:

1 Attach the special screws 06U-130 and the special washers 06U-150 to the aft side wall assembly 06U-010.

2 Attach the handle assemblies 06U-120 to the aft side wall assembly 06U-010.

3 Attach the security pins 06U-140 to the handle assemblies 06U-120.

SUB TASK 25-41-51-410-047-B01
D2549030400200 D2549030613400

2. Installation of the Side Wall (06U-1)

(a) Attach the fittings 06U-020 with the screws 06U-030 to the aft side wall assembly 06U-010.

(b) Assemble the post assembly 06U-250 as follows:

1 Attach the screws 06U-253.

(c) Attach the post assembly 06U-250 with the screws 06U-260, 06U-280, the washers 06U-230 and the caps 06U-270.

(d) Assemble the single door emergency unlocking device assembly 06U-410 as follows:

WARNING: BE CAREFUL WHEN YOU USE MATERIAL NO. 08-007 SEALANT, HIGH TEMPERATURE. OBEY THE MATERIAL MANUFACTURER'S INSTRUCTIONS.

1 Apply the Material No. 08-007 Sealant, High Temperature to the snap catch 06U-460 and to the pin 06U-450 and attach the emergency unlocking-device pivot 06U-440, the snap catch 06U-460 and the pin 06U-450 to the emergency unlocking-device housing 06U-420.

NOTE: Adjust the snap catch 06U-460 a half turn before stop.

WARNING: BE CAREFUL WHEN YOU USE MATERIAL NO. 08-007 SEALANT, HIGH TEMPERATURE. OBEY THE MATERIAL MANUFACTURER'S INSTRUCTIONS.

2 Apply the Material No. 08-007 Sealant, High Temperature to the bolt 06U-470 and attach the emergency unlocking-device strike 06U-430 with the bolt 06U-470 to the emergency unlocking-device housing 06U-420.

(e) Attach the single door emergency unlocking device assembly 06U-410 and the plates 06U-480 with the screws 06U-490 and the nuts 06U-500 to the post assembly 06U-250.

(f) Attach the angle 06U-370 with the screws 06U-380 and the washers 06U-390 to the aft side wall assembly 06U-010.

(g) Attach the angles 06U-200 with the screws 06U-220 and the washers 06U-230 to the aft side wall assembly 06U-010.

(h) Attach the oxygen container assy 06U-210 with the screws 06U-220 and the washers 06U-230 to the angles 06U-200.

(i) Attach the ground cable in accordance with the Process and Material Specification PMS 01-04-58 to the oxygen container assy 06U-210.

(j) Attach the angle 06U-170 with the screws 06U-220 and the washers 06U-230 to the aft side wall assembly 06U-010.

(k) Attach the cover oxygen container assy 06U-160 with the screws 06U-180 and the nuts 06U-190 to the angle 06U-170.

(l) Attach the studs 06U-240 and the washers 06U-230 to the cover oxygen container assy 06U-160.

(m) Install and assemble the handle assemblies 06U-120 as follows:

1 Attach the special screws 06U-130 and the special washers 06U-150 to the aft side wall assembly 06U-010.

2 Attach the handle assemblies 06U-120 to the aft side wall assembly 06U-010.

3 Attach the security pins 06U-140 to the handle assemblies 06U-120.

SUB TASK 25-41-51-410-047-C01
D2549020510000 D2549030606800 R225401192-000 R225401618-000 R225401618-002

3. Installation of the Side Wall (06U-1)

(a) Attach the brackets 06U-013, 06U-017 to the aft side wall assembly 06U-010.

(b) Attach the fittings 06U-020 with the screws 06U-030 to the brackets 06U-013.

(c) Assemble the post assembly 06U-250 as follows:

1 Attach the screws 06U-253.

(d) Attach the post assembly 06U-250 with the screws 06U-260, 06U-280, the washers 06U-230 and the caps 06U-270.

(e) Attach the angles 06U-200 with the screws 06U-220 and the washers 06U-230 to the aft side wall assembly 06U-010.

(f) Attach the oxygen container assy 06U-210 with the screws 06U-220, 06U-222 and the washers 06U-230 to the angles 06U-200.

(g) Attach the ground cable in accordance with the Process and Material Specification PMS 01-04-58 to the oxygen container assy 06U-210.

(h) Attach the angle 06U-170 with the screws 06U-220 and the washers 06U-230 to the aft side wall assembly 06U-010.

(i) Attach the cover oxygen container assy 06U-160 with the screws 06U-180 and the nuts 06U-190 to the angle 06U-170.

(j) Attach the studs 06U-240 and the washers 06U-230 to the cover oxygen container assy 06U-160.

(k) Install and assemble the handle assemblies 06U-120 as follows:

1 Attach the special screws 06U-130 and the special washers 06U-150 to the aft side wall assembly 06U-010.

2 Attach the handle assemblies 06U-120 to the aft side wall assembly 06U-010.

3 Attach the security pins 06U-140 to the handle assemblies 06U-120.

SUB TASK 25-41-51-410-047-D01
D2549010606800 D2549010607000

4. Installation of the Side Wall (06U-1)

(a) Attach the brackets 06U-013, 06U-017 to the aft side wall assembly 06U-010.

(b) Attach the fittings 06U-020 with the screws 06U-030 to the brackets 06U-013.

(c) Assemble the post assembly 06U-250 as follows:

1 Attach the screws 06U-253.

(d) Attach the post assembly 06U-250 with the screws 06U-260, 06U-280, the washers 06U-230 and the caps 06U-270.

(e) Attach the angles 06U-200 with the screws 06U-220 and the washers 06U-230 to the aft side wall assembly 06U-010.

(f) Attach the oxygen container assy 06U-210 with the screws 06U-220 and the washers 06U-230 to the angles 06U-200.

(g) Attach the ground cable in accordance with the Process and Material Specification PMS 01-04-58 to the oxygen container assy 06U-210.

(h) Attach the angle 06U-170 with the screws 06U-220 and the washers 06U-230 to the aft side wall assembly 06U-010.

(i) Attach the cover oxygen container assy 06U-160 with the screws 06U-180 and the nuts 06U-190 to the angle 06U-170.

(j) Attach the studs 06U-240 and the washers 06U-230 to the cover oxygen container assy 06U-160.

(k) Attach the screws 06U-300 to the aft side wall assembly 06U-010.

(l) Attach the toilet seat cover dispenser 06U-290 to the screws 06U-300.

(m) Install and assemble the handle assemblies 06U-120 as follows:

1 Attach the special screws 06U-130 and the special washers 06U-150 to the aft side wall assembly 06U-010.

2 Attach the handle assemblies 06U-120 to the aft side wall assembly 06U-010.

3 Attach the security pins 06U-140 to the handle assemblies 06U-120.

SUB TASK 25-41-51-410-047-E01
D2549020505600

5. Installation of the Side Wall (06U-1)

(a) Attach the brackets 06U-013, 06U-017 to the aft side wall assembly 06U-010.

(b) Attach the fittings 06U-020 with the screws 06U-030 to the brackets 06U-013.

(c) Assemble the post assembly 06U-250 as follows:

1 Attach the screws 06U-253.

(d) Attach the post assembly 06U-250 with the screws 06U-260, 06U-280, the washers 06U-230 and the caps 06U-270.

(e) Attach the angles 06U-200 with the screws 06U-220 and the washers 06U-230 to the aft side wall assembly 06U-010.

(f) Attach the oxygen container assy 06U-210 with the screws 06U-220 and the washers 06U-230 to the angles 06U-200.

(g) Attach the ground cable in accordance with the Process and Material Specification PMS 01-04-58 to the oxygen container assy 06U-210.

(h) Attach the angle 06U-170 with the screws 06U-220 and the washers 06U-230 to the aft side wall assembly 06U-010.

(i) Attach the cover oxygen container assy 06U-160 with the screws 06U-180 and the nuts 06U-190 to the angle 06U-170.

(j) Attach the studs 06U-240 and the washers 06U-230 to the cover oxygen container assy 06U-160.

(k) Attach the support 06U-350 with the screws 06U-261 and the washers 06U-231 to the aft side wall assembly 06U-010.

(l) Install and assemble the handle assembly 06U-310 as follows:

1 Attach the special screws 06U-320 and the special washers 06U-340 to the aft side wall assembly 06U-010.

2 Attach the handle assembly 06U-310 to the aft side wall assembly 06U-010.

3 Attach the security pins 06U-330 to the handle assembly 06U-310.

SUB TASK 25-41-51-410-047-F01
D2549030614200 D2549030614400 R225401625-000

6. Installation of the Side Wall (06U-1)

(a) Attach the brackets 06U-013, 06U-017 to the aft side wall assembly 06U-010.

(b) Attach the fittings 06U-020 with the screws 06U-030 to the brackets 06U-013.

(c) Assemble the post assembly 06U-250 as follows:

1 Attach the screws 06U-253.

(d) Attach the post assembly 06U-250 with the screws 06U-260, 06U-280, the washers 06U-230 and the caps 06U-270.

(e) Attach the angles 06U-200 with the screws 06U-220 and the washers 06U-230 to the aft side wall assembly 06U-010.

(f) Attach the oxygen container assy 06U-210 with the screws 06U-220, 06U-222 and the washers 06U-230 to the angles 06U-200.

(g) Attach the ground cable in accordance with the Process and Material Specification PMS 01-04-58 to the oxygen container assy 06U-210.

(h) Attach the angle 06U-170 with the screws 06U-220 and the washers 06U-230 to the aft side wall assembly 06U-010.

(i) Attach the cover oxygen container assy 06U-160 with the screws 06U-180 and the nuts 06U-190 to the angle 06U-170.

(j) Attach the studs 06U-240 and the washers 06U-230 to the cover oxygen container assy 06U-160.

(k) Attach the screws 06U-300 to the aft side wall assembly 06U-010.

(l) Attach the toilet seat cover dispenser 06U-290 to the screws 06U-300.

(m) Attach the support 06U-350 with the screws 06U-261 and the washers 06U-231 to the aft side wall assembly 06U-010.

(n) Install and assemble the handle assembly 06U-310 as follows:

1 Attach the special screws 06U-320 and the special washers 06U-340 to the aft side wall assembly 06U-010.

2 Attach the handle assembly 06U-310 to the aft side wall assembly 06U-010.

3 Attach the security pins 06U-330 to the handle assembly 06U-310.

SUB TASK 25-41-51-410-047-G01
D2549030611000

7. Installation of the Side Wall (06U-1)

(a) Attach the fittings 06U-020 with the screws 06U-030 to the aft side wall assembly 06U-010.

(b) Assemble the post assembly 06U-250 as follows:

1 Attach the screws 06U-253.

(c) Attach the post assembly 06U-250 with the screws 06U-260, 06U-280, the washers 06U-230 and the caps 06U-270.

(d) Attach the angle 06U-370 with the screws 06U-380 and the washers 06U-390 to the aft side wall assembly 06U-010.

(e) Attach the angles 06U-200 with the screws 06U-220 and the washers 06U-230 to the aft side wall assembly 06U-010.

(f) Attach the oxygen container assy 06U-210 with the screws 06U-220 and the washers 06U-230 to the angles 06U-200.

(g) Attach the ground cable in accordance with the Process and Material Specification PMS 01-04-58 to the oxygen container assy 06U-210.

(h) Attach the angle 06U-170 with the screws 06U-220 and the washers 06U-230 to the aft side wall assembly 06U-010.

(i) Attach the cover oxygen container assy 06U-160 with the screws 06U-180 and the nuts 06U-190 to the angle 06U-170.

(j) Attach the studs 06U-240 and the washers 06U-230 to the cover oxygen container assy 06U-160.

(k) Install and assemble the handle assemblies 06U-120 as follows:

1 Attach the special screws 06U-130 and the special washers 06U-150 to the aft side wall assembly 06U-010.

2 Attach the handle assemblies 06U-120 to the aft side wall assembly 06U-010.

3 Attach the security pins 06U-140 to the handle assemblies 06U-120.

SUB TASK 25-41-51-410-047-H01
D2549020803600 D2549030609800

8. Installation of the Side Wall (06U-1)

(a) Attach the fittings 06U-020 with the screws 06U-030 to the aft side wall assembly 06U-010.

(b) Assemble the post assembly 06U-250 as follows:

1 Attach the screws 06U-253.

(c) Attach the post assembly 06U-250 with the screws 06U-260, 06U-280, the washers 06U-230 and the caps 06U-270.

(d) Attach the angle 06U-370 with the screws 06U-380 and the washers 06U-390 to the aft side wall assembly 06U-010.

(e) Attach the angles 06U-200 with the screws 06U-220 and the washers 06U-230 to the aft side wall assembly 06U-010.

(f) Attach the oxygen container assy 06U-210 with the screws 06U-220 and the washers 06U-230 to the angles 06U-200.

(g) Attach the ground cable in accordance with the Process and Material Specification PMS 01-04-58 to the oxygen container assy 06U-210.

(h) Attach the angle 06U-170 with the screws 06U-220 and the washers 06U-230 to the aft side wall assembly 06U-010.

(i) Attach the cover oxygen container assy 06U-160 with the screws 06U-180 and the nuts 06U-190 to the angle 06U-170.

(j) Attach the studs 06U-240 and the washers 06U-230 to the cover oxygen container assy 06U-160.

(k) Install and assemble the handle assemblies 06U-120 as follows:

1 Attach the special screws 06U-130 and the special washers 06U-150 to the aft side wall assembly 06U-010.

2 Attach the handle assemblies 06U-120 to the aft side wall assembly 06U-010.

3 Attach the security pins 06U-140 to the handle assemblies 06U-120.

SUB TASK 25-41-51-410-047-J01
D2549030403800 R225401172-000

9. Installation of the Side Wall (06U-1)

(a) Attach the fittings 06U-020 with the screws 06U-030 to the aft side wall assembly 06U-010.

(b) Assemble the post assembly 06U-250 as follows:

1 Attach the screws 06U-253.

(c) Attach the post assembly 06U-250 with the screws 06U-260, 06U-280, the washers 06U-230 and the caps 06U-270.

(d) Attach the angle 06U-370 with the screws 06U-380 and the washers 06U-390 to the aft side wall assembly 06U-010.

(e) Attach the angles 06U-200 with the screws 06U-220 and the washers 06U-230 to the aft side wall assembly 06U-010.

(f) Attach the oxygen container assy 06U-210 with the screws 06U-220, 06U-222 and the washers 06U-230 to the angles 06U-200.

(g) Attach the ground cable in accordance with the Process and Material Specification PMS 01-04-58 to the oxygen container assy 06U-210.

(h) Attach the angle 06U-170 with the screws 06U-220 and the washers 06U-230 to the aft side wall assembly 06U-010.

(i) Attach the cover oxygen container assy 06U-160 with the screws 06U-180 and the nuts 06U-190 to the angle 06U-170.

(j) Attach the studs 06U-240 and the washers 06U-230 to the cover oxygen container assy 06U-160.

(k) Attach the screws 06U-300 to the aft side wall assembly 06U-010.

(l) Attach the toilet seat cover dispenser 06U-290 to the screws 06U-300.

(m) Install and assemble the handle assemblies 06U-120 as follows:

1 Attach the special screws 06U-130 and the special washers 06U-150 to the aft side wall assembly 06U-010.

2 Attach the handle assemblies 06U-120 to the aft side wall assembly 06U-010.

3 Attach the security pins 06U-140 to the handle assemblies 06U-120.

SUB TASK 25-41-51-410-047-K01
D2549020801000 D2549030400400 D2549030608000 D2549030612800 R225401134-012 R225401134-028 R225401614-000

10. Installation of the Side Wall (06U-1)

(a) If removed, attach the kick strip 06U-510 to the aft side wall assembly 06U-010 with the adhesive (FASTBOND 10).

(b) Attach the fittings 06U-020 with the screws 06U-030 to the aft side wall assembly 06U-010.

(c) Assemble the post assembly 06U-250 as follows:

1 Attach the screws 06U-253.

(d) Attach the post assembly 06U-250 with the screws 06U-260, 06U-280, the washers 06U-230 and the caps 06U-270.

(e) Attach the angle 06U-370 with the screws 06U-380 and the washers 06U-390 to the aft side wall assembly 06U-010.

(f) Attach the angles 06U-200 with the screws 06U-220 and the washers 06U-230 to the aft side wall assembly 06U-010.

(g) Attach the oxygen container assy 06U-210 with the screws 06U-220, 06U-222 and the washers 06U-230 to the angles 06U-200.

(h) Attach the ground cable in accordance with the Process and Material Specification PMS 01-04-58 to the oxygen container assy 06U-210.

(i) Attach the angle 06U-170 with the screws 06U-220 and the washers 06U-230 to the aft side wall assembly 06U-010.

(j) Attach the cover oxygen container assy 06U-160 with the screws 06U-180 and the nuts 06U-190 to the angle 06U-170.

(k) Attach the studs 06U-240 and the washers 06U-230 to the cover oxygen container assy 06U-160.

(l) Attach the screws 06U-300 to the aft side wall assembly 06U-010.

(m) Attach the toilet seat cover dispenser 06U-290 to the screws 06U-300.

(n) Attach the support 06U-350 with the screws 06U-261 and the washers 06U-231 to the aft side wall assembly 06U-010.

(o) Install and assemble the handle assembly 06U-310 as follows:

1 Attach the special screws 06U-320 and the special washers 06U-340 to the aft side wall assembly 06U-010.

2 Attach the handle assembly 06U-310 to the aft side wall assembly 06U-010.

3 Attach the security pins 06U-330 to the handle assembly 06U-310.

TASK 25-41-51-400-819-W01
D2549010608200 D2549010608400 D2549010609400 D2549020510800 D2549020511200 D2549020511800 D2549020512400 D2549020802800 D2549030503800 D2549030611800 D2549030614600 R225401168-002 R225401168-022 R225401183-002 R225401605-002

204. Installation of the Side Wall

A. General

This task gives you the installation and assembly procedures of the component.

B. Job Set-up Information
(1) Consumable Materials

REFERENCE	DESIGNATION
08-007	Sealant, High Temperature

Table 7029
Consumable Materials

C. Procedure

WARNING: BE CAREFUL WHEN YOU USE SOLVENTS/CLEANING AGENTS, SEALANTS AND OTHER MATERIALS. OBEY THE MATERIAL MANUFACTURER'S INSTRUCTIONS AND THE LOCAL REGULATIONS. MAKE SURE THAT THERE IS A GOOD FLOW OF AIR THROUGH THE WORK AREA. DO NOT BREATHE THE FUMES. DO NOT SMOKE. DO NOT USE THESE MATERIALS NEAR A FLAME, SPARKS OR SOURCES OF HEAT. USE PROTECTIVE CLOTHING, GOGGLES AND GLOVES. IF YOU GET ONE OF THESE MATERIALS ON YOUR SKIN OR IN YOUR EYES, FLUSH IT AWAY WITH A FLOW OF CLEAN WATER. IF YOU GET ONE OF THESE MATERIALS IN YOUR MOUTH, GET IMMEDIATE MEDICAL AID. IN GENERAL, THESE MATERIALS ARE POISONOUS, FLAMMABLE AND SKIN IRRITANTS.

WARNING: KEEP ALL HYDROCARBONS (FUELS, LUBRICANTS, ETC.) AWAY FROM ALL SOURCES OF OXYGEN. OXYGEN BECOMES EXPLOSIVE WHEN IT TOUCHES HYDROCARBONS.

WARNING: TO PREVENT CONTAMINATION OF THE OXYGEN SYSTEM, MAKE SURE THAT YOUR HANDS AND ALL THE TOOLS ARE CLEAN.

CAUTION: DO ALL THE WORK ON A CLEAN, SOFT SURFACE TO PREVENT DAMAGE TO THE COMPONENTS.

CAUTION: **MAKE SURE THAT ALL THE PARTS ARE CLEAN BEFORE YOU ASSEMBLE THEM.**

SUB TASK 25-41-51-410-090-A01
D2549020802000 D2549030611800 R225401629-000

1. Installation of the Side Wall (06V-1)

   (a) Attach the brackets 06V-013, 06V-017 to the aft side wall assembly 06V-010.

   (b) Attach the fittings 06V-020 with the screws 06V-030 to the brackets 06V-013.

   (c) Assemble the post assembly 06V-250 as follows:

      1 Attach the screws 06V-260.

   (d) Attach the post assembly 06V-250 with the screws 06V-280, 06V-300, the washers 06V-230 and the caps 06V-290.

   (e) Assemble the single door emergency unlocking device assembly 06V-380 as follows:

      WARNING: **BE CAREFUL WHEN YOU USE MATERIAL NO. 08-007 SEALANT, HIGH TEMPERATURE. OBEY THE MATERIAL MANUFACTURER'S INSTRUCTIONS.**

      1 Apply the Material No. 08-007 Sealant, High Temperature to the snap catch 06V-430 and to the pin 06V-420 and attach the emergency unlocking-device pivot 06V-410, the snap catch 06V-430 and the pin 06V-420 to the emergency unlocking-device housing 06V-390.

      NOTE: **Adjust the snap catch 06V-430 a half turn before stop.**

      WARNING: **BE CAREFUL WHEN YOU USE MATERIAL NO. 08-007 SEALANT, HIGH TEMPERATURE. OBEY THE MATERIAL MANUFACTURER'S INSTRUCTIONS.**

      2 Apply the Material No. 08-007 Sealant, High Temperature to the bolt 06V-440 and attach the emergency unlocking-device strike 06V-400 with the bolt 06V-440 to the emergency unlocking-device housing 06V-390.

   (f) Attach the single door emergency unlocking device assembly 06V-380 and the plates 06V-450 with the screws 06V-460 and the nuts 06V-470 to the post assembly 06V-250.

(g) Attach the angles 06V-200 with the screws 06V-220 and the washers 06V-230 to the aft side wall assembly 06V-010.

(h) Attach the oxygen container assy 06V-210 with the screws 06V-220, 06V-222 and the washers 06V-230 to the angles 06V-200.

(i) Attach the ground cable in accordance with the Process and Material Specification PMS 01-04-58 to the oxygen container assy 06V-210.

(j) Attach the angle 06V-170 with the screws 06V-220 and the washers 06V-230 to the aft side wall assembly 06V-010.

(k) Attach the cover oxygen container assy 06V-160 with the screws 06V-180 and the nuts 06V-190 to the angle 06V-170.

(l) Attach the studs 06V-240 and the washers 06V-230 to the cover oxygen container assy 06V-160.

(m) Install and assemble the handle assemblies 06V-120 as follows:

1 Attach the special screws 06V-130 and the special washers 06V-150 to the aft side wall assembly 06V-010.

2 Attach the handle assemblies 06V-120 to the aft side wall assembly 06V-010.

3 Attach the security pins 06V-140 to the handle assemblies 06V-120.

SUB TASK 25-41-51-410-090-B01
D2549020511800 R225401605-002

2. Installation of the Side Wall (06V-1)

(a) Attach the fittings 06V-020 with the screws 06V-030 to the aft side wall assembly 06V-010.

(b) Assemble the post assembly 06V-250 as follows:

1 Attach the screws 06V-260.

(c) Attach the post assembly 06V-250 with the screws 06V-280, 06V-300, the washers 06V-230 and the caps 06V-290.

(d) Attach the angle 06V-350 with the screws 06V-360 and the washers 06V-370 to the aft side wall assembly 06V-010.

(e) Attach the angles 06V-200 with the screws 06V-220 and the washers 06V-230 to the aft side wall assembly 06V-010.

(f) Attach the oxygen container assy 06V-210 with the screws 06V-220 and the washers 06V-230 to the angles 06V-200.

(g) Attach the ground cable in accordance with the Process and Material Specification PMS 01-04-58 to the oxygen container assy 06V-210.

(h) Attach the angle 06V-170 with the screws 06V-220 and the washers 06V-230 to the aft side wall assembly 06V-010.

(i) Attach the cover oxygen container assy 06V-160 with the screws 06V-180 and the nuts 06V-190 to the angle 06V-170.

(j) Attach the studs 06V-240 and the washers 06V-230 to the cover oxygen container assy 06V-160.

(k) Attach the coat hook 06V-330 with the screw 06V-340.

(l) Install and assemble the handle assemblies 06V-120 as follows:

1 Attach the special screws 06V-130 and the special washers 06V-150 to the aft side wall assembly 06V-010.

2 Attach the handle assemblies 06V-120 to the aft side wall assembly 06V-010.

3 Attach the security pins 06V-140 to the handle assemblies 06V-120.

SUB TASK 25-41-51-410-090-C01
D2549010608400 D2549030503800

3. Installation of the Side Wall (06V-1)

(a) Attach the brackets 06V-013, 06V-017 to the aft side wall assembly 06V-010.

(b) Attach the fittings 06V-020 with the screws 06V-030 to the brackets 06V-013.

(c) Assemble the post assembly 06V-250 as follows:

1 Attach the screws 06V-260.

(d) Attach the post assembly 06V-250 with the screws 06V-280, 06V-300, the washers 06V-230 and the caps 06V-290.

(e) Attach the angles 06V-200 with the screws 06V-220 and the washers 06V-230 to the aft side wall assembly 06V-010.

(f) Attach the oxygen container assy 06V-210 with the screws 06V-220 and the washers 06V-230 to the angles 06V-200.

(g) Attach the ground cable in accordance with the Process and Material Specification PMS 01-04-58 to the oxygen container assy 06V-210.

(h) Attach the angle 06V-170 with the screws 06V-220 and the washers 06V-230 to the aft side wall assembly 06V-010.

(i) Attach the cover oxygen container assy 06V-160 with the screws 06V-180 and the nuts 06V-190 to the angle 06V-170.

(j) Attach the studs 06V-240 and the washers 06V-230 to the cover oxygen container assy 06V-160.

(k) Attach the screws 06V-320 to the aft side wall assembly 06V-010.

(l) Attach the toilet seat cover dispenser 06V-310 to the screws 06V-320.

(m) Install and assemble the handle assemblies 06V-120 as follows:

1 Attach the special screws 06V-130 and the special washers 06V-150 to the aft side wall assembly 06V-010.

2 Attach the handle assemblies 06V-120 to the aft side wall assembly 06V-010.

3 Attach the security pins 06V-140 to the handle assemblies 06V-120.

SUB TASK 25-41-51-410-090-D01
D2549010608200

4. Installation of the Side Wall (06V-1)

(a) Attach the brackets 06V-013, 06V-017 to the aft side wall assembly 06V-010.

(b) Attach the fittings 06V-020 with the screws 06V-030 to the brackets 06V-013.

(c) Assemble the post assembly 06V-250 as follows:

1 Attach the screws 06V-260.

(d) Attach the post assembly 06V-250 with the screws 06V-280, 06V-300, the washers 06V-230 and the caps 06V-290.

(e) Attach the angles 06V-200 with the screws 06V-220 and the washers 06V-230 to the aft side wall assembly 06V-010.

(f) Attach the oxygen container assy 06V-210 with the screws 06V-220 and the washers 06V-230 to the angles 06V-200.

(g) Attach the ground cable in accordance with the Process and Material Specification PMS 01-04-58 to the oxygen container assy 06V-210.

(h) Attach the angle 06V-170 with the screws 06V-220 and the washers 06V-230 to the aft side wall assembly 06V-010.

(i) Attach the cover oxygen container assy 06V-160 with the screws 06V-180 and the nuts 06V-190 to the angle 06V-170.

(j) Attach the studs 06V-240 and the washers 06V-230 to the cover oxygen container assy 06V-160.

(k) Install and assemble the handle assemblies 06V-120 as follows:

1 Attach the special screws 06V-130 and the special washers 06V-150 to the aft side wall assembly 06V-010.

2 Attach the handle assemblies 06V-120 to the aft side wall assembly 06V-010.

3 Attach the security pins 06V-140 to the handle assemblies 06V-120.

SUB TASK 25-41-51-410-090-E01
D2549010609400 D2549020802800 R225401183-002

5. Installation of the Side Wall (06V-1)

(a) Attach the fittings 06V-020 with the screws 06V-030 to the aft side wall assembly 06V-010.

(b) Assemble the post assembly 06V-250 as follows:

1 Attach the screws 06V-260.

(c) Attach the post assembly 06V-250 with the screws 06V-280, 06V-300, the washers 06V-230 and the caps 06V-290.

(d) Attach the angle 06V-350 with the screws 06V-360 and the washers 06V-370 to the aft side wall assembly 06V-010.

(e) Attach the angles 06V-200 with the screws 06V-220 and the washers 06V-230 to the aft side wall assembly 06V-010.

(f) Attach the oxygen container assy 06V-210 with the screws 06V-220, 06V-222 and the washers 06V-230 to the angles 06V-200.

(g) Attach the ground cable in accordance with the Process and Material Specification PMS 01-04-58 to the oxygen container assy 06V-210.

(h) Attach the angle 06V-170 with the screws 06V-220 and the washers 06V-230 to the aft side wall assembly 06V-010.

(i) Attach the cover oxygen container assy 06V-160 with the screws 06V-180 and the nuts 06V-190 to the angle 06V-170.

(j) Attach the studs 06V-240 and the washers 06V-230 to the cover oxygen container assy 06V-160.

(k) Attach the screws 06V-320 to the aft side wall assembly 06V-010.

(l) Attach the toilet seat cover dispenser 06V-310 to the screws 06V-320.

(m) Install and assemble the handle assemblies 06V-120 as follows:

1 Attach the special screws 06V-130 and the special washers 06V-150 to the aft side wall assembly 06V-010.

2 Attach the handle assemblies 06V-120 to the aft side wall assembly 06V-010.

3 Attach the security pins 06V-140 to the handle assemblies 06V-120.

SUB TASK 25-41-51-410-090-F01
D2549020512400 R225401168-002 R225401168-022

6. Installation of the Side Wall (06V-1)

(a) Attach the fittings 06V-020 with the screws 06V-030 to the aft side wall assembly 06V-010.

(b) Assemble the post assembly 06V-250 as follows:

1 Attach the screws 06V-260.

(c) Attach the post assembly 06V-250 with the screws 06V-280, 06V-300, the washers 06V-230 and the caps 06V-290.

(d) Attach the angle 06V-350 with the screws 06V-360 and the washers 06V-370 to the aft side wall assembly 06V-010.

(e) Attach the angles 06V-200 with the screws 06V-220 and the washers 06V-230 to the aft side wall assembly 06V-010.

(f) Attach the oxygen container assy 06V-210 with the screws 06V-220 and the washers 06V-230 to the angles 06V-200.

(g) Attach the ground cable in accordance with the Process and Material Specification PMS 01-04-58 to the oxygen container assy 06V-210.

(h) Attach the angle 06V-170 with the screws 06V-220 and the washers 06V-230 to the aft side wall assembly 06V-010.

(i) Attach the cover oxygen container assy 06V-160 with the screws 06V-180 and the nuts 06V-190 to the angle 06V-170.

(j) Attach the studs 06V-240 and the washers 06V-230 to the cover oxygen container assy 06V-160.

(k) Install and assemble the handle assemblies 06V-120 as follows:

1 Attach the special screws 06V-130 and the special washers 06V-150 to the aft side wall assembly 06V-010.

2 Attach the handle assemblies 06V-120 to the aft side wall assembly 06V-010.

3 Attach the security pins 06V-140 to the handle assemblies 06V-120.

SUB TASK 25-41-51-410-090-G01
D2549020511200

7. Installation of the Side Wall (06V-1)

(a) Attach the fittings 06V-020 with the screws 06V-030 to the aft side wall assembly 06V-010.

(b) Assemble the post assembly 06V-250 as follows:

1 Attach the screws 06V-260.

(c) Attach the post assembly 06V-250 with the screws 06V-280, 06V-300, the washers 06V-230 and the caps 06V-290.

(d) Attach the angle 06V-350 with the screws 06V-360 and the washers 06V-370 to the aft side wall assembly 06V-010.

(e) Attach the angles 06V-200 with the screws 06V-220 and the washers 06V-230 to the aft side wall assembly 06V-010.

(f) Attach the oxygen container assy 06V-210 with the screws 06V-220 and the washers 06V-230 to the angles 06V-200.

(g) Attach the ground cable in accordance with the Process and Material Specification PMS 01-04-58 to the oxygen container assy 06V-210.

(h) Attach the angle 06V-170 with the screws 06V-220 and the washers 06V-230 to the aft side wall assembly 06V-010.

(i) Attach the cover oxygen container assy 06V-160 with the screws 06V-180 and the nuts 06V-190 to the angle 06V-170.

(j) Attach the studs 06V-240 and the washers 06V-230 to the cover oxygen container assy 06V-160.

(k) Install and assemble the handle assemblies 06V-120 as follows:

1 Attach the special screws 06V-130 and the special washers 06V-150 to the aft side wall assembly 06V-010.

2 Attach the handle assemblies 06V-120 to the aft side wall assembly 06V-010.

3 Attach the security pins 06V-140 to the handle assemblies 06V-120.

SUB TASK 25-41-51-410-090-H01
D2549020510800 D2549030614600

8. Installation of the Side Wall (06V-1)

(a) Attach the fittings 06V-020 with the screws 06V-030 to the aft side wall assembly 06V-010.

(b) Assemble the post assembly 06V-250 as follows:

1 Attach the screws 06V-260.

(c) Attach the post assembly 06V-250 with the screws 06V-280, 06V-300, the washers 06V-230 and the caps 06V-290.

(d) Attach the angle 06V-350 with the screws 06V-360 and the washers 06V-370 to the aft side wall assembly 06V-010.

(e) Attach the angles 06V-200 with the screws 06V-220 and the washers 06V-230 to the aft side wall assembly 06V-010.

(f) Attach the oxygen container assy 06V-210 with the screws 06V-220 and the washers 06V-230 to the angles 06V-200.

(g) Attach the ground cable in accordance with the Process and Material Specification PMS 01-04-58 to the oxygen container assy 06V-210.

(h) Attach the angle 06V-170 with the screws 06V-220 and the washers 06V-230 to the aft side wall assembly 06V-010.

(i) Attach the cover oxygen container assy 06V-160 with the screws 06V-180 and the nuts 06V-190 to the angle 06V-170.

(j) Attach the studs 06V-240 and the washers 06V-230 to the cover oxygen container assy 06V-160.

(k) Install and assemble the handle assemblies 06V-120 as follows:

1 Attach the special screws 06V-130 and the special washers 06V-150 to the aft side wall assembly 06V-010.

2 Attach the handle assemblies 06V-120 to the aft side wall assembly 06V-010.

3 Attach the security pins 06V-140 to the handle assemblies 06V-120.

TASK 25-41-51-400-819-X01
D2549010610000 D2549010610200 D2549010610400 D2549020510400 D2549020513600 D2549020711600 D2549020800800 D2549020801600 D2549020802200 D2549020803000 D2549020803800 D2549030610400 D2549030613200 D2549030613800 R225401172-018

205. Installation of the Side Wall

A. General

This task gives you the installation and assembly procedures of the component.

B. Job Set-up Information
(1) Consumable Materials

REFERENCE	DESIGNATION
08-007	Sealant, High Temperature

Table 7030
Consumable Materials

C. Procedure

WARNING: **BE CAREFUL WHEN YOU USE SOLVENTS/CLEANING AGENTS, SEALANTS AND OTHER MATERIALS. OBEY THE MATERIAL MANUFACTURER'S INSTRUCTIONS AND THE LOCAL REGULATIONS. MAKE SURE THAT THERE IS A GOOD FLOW OF AIR THROUGH THE WORK AREA. DO NOT BREATHE THE FUMES. DO NOT SMOKE. DO NOT USE THESE MATERIALS NEAR A FLAME, SPARKS OR SOURCES OF HEAT. USE PROTECTIVE CLOTHING, GOGGLES AND GLOVES. IF YOU GET ONE OF THESE MATERIALS ON YOUR SKIN OR IN YOUR EYES, FLUSH IT AWAY WITH A FLOW OF CLEAN WATER. IF YOU GET ONE OF THESE MATERIALS IN YOUR MOUTH, GET IMMEDIATE MEDICAL AID. IN GENERAL, THESE MATERIALS ARE POISONOUS, FLAMMABLE AND SKIN IRRITANTS.**

WARNING: **KEEP ALL HYDROCARBONS (FUELS, LUBRICANTS, ETC.) AWAY FROM ALL SOURCES OF OXYGEN. OXYGEN BECOMES EXPLOSIVE WHEN IT TOUCHES HYDROCARBONS.**

WARNING: **TO PREVENT CONTAMINATION OF THE OXYGEN SYSTEM, MAKE SURE THAT YOUR HANDS AND ALL THE TOOLS ARE CLEAN.**

CAUTION: **DO ALL THE WORK ON A CLEAN, SOFT SURFACE TO PREVENT DAMAGE TO THE COMPONENTS.**

CAUTION: **MAKE SURE THAT ALL THE PARTS ARE CLEAN BEFORE YOU ASSEMBLE THEM.**

SUB TASK 25-41-51-410-091-A01
D2549010610000

1. Installation of the Side Wall (06W-1)

   (a) Attach the fittings 06W-040 with the screws 06W-050 to the aft side wall assembly 06W-010.

   (b) Assemble the post assembly 06W-270 as follows:

      1 Attach the screws 06W-273.

   (c) Attach the post assembly 06W-270 with the screws 06W-280, 06W-300, the washers 06W-250 and the caps 06W-290.

   (d) Assemble the single door emergency unlocking device assembly 06W-410 as follows:

      WARNING: **BE CAREFUL WHEN YOU USE MATERIAL NO. 08-007 SEALANT, HIGH TEMPERATURE. OBEY THE MATERIAL MANUFACTURER'S INSTRUCTIONS.**

      1 Apply the Material No. 08-007 Sealant, High Temperature to the snap catch 06W-460 and to the pin 06W-450 and attach the emergency unlocking-device pivot 06W-440, the snap catch 06W-460 and the pin 06W-450 to the emergency unlocking-device housing 06W-420.

      NOTE: **Adjust the snap catch 06W-460 a half turn before stop.**

      WARNING: **BE CAREFUL WHEN YOU USE MATERIAL NO. 08-007 SEALANT, HIGH TEMPERATURE. OBEY THE MATERIAL MANUFACTURER'S INSTRUCTIONS.**

      2 Apply the Material No. 08-007 Sealant, High Temperature to the bolt 06W-470 and attach the emergency unlocking-device strike 06W-430 with the bolt 06W-470 to the emergency unlocking-device housing 06W-420.

   (e) Attach the single door emergency unlocking device assembly 06W-410 and the plates 06W-480 with the screws 06W-490 and the nuts 06W-500 to the post assembly 06W-270.

   (f) Attach the angle 06W-380 with the screws 06W-390 and the washers 06W-400 to the aft side wall assembly 06W-010.

(g) Attach the angles 06W-220 with the screws 06W-240 and the washers 06W-250 to the aft side wall assembly 06W-010.

(h) Attach the oxygen container assy 06W-230 with the screws 06W-240 and the washers 06W-250 to the angles 06W-220.

(i) Attach the ground cable in accordance with the Process and Material Specification PMS 01-04-58 to the oxygen container assy 06W-230.

(j) Attach the angle 06W-190 with the screws 06W-240 and the washers 06W-250 to the aft side wall assembly 06W-010.

(k) Attach the cover oxygen container assy 06W-180 with the screws 06W-200 and the nuts 06W-210 to the angle 06W-190.

(l) Attach the studs 06W-260 and the washers 06W-250 to the cover oxygen container assy 06W-180.

(m) Attach the screws 06W-320 to the aft side wall assembly 06W-010.

(n) Attach the toilet seat cover dispenser 06W-310 to the screws 06W-320.

(o) Attach the support 06W-330 with the screws 06W-281 and the washers 06W-251 to the aft side wall assembly 06W-010.

(p) Install and assemble the handle assembly 06W-140 as follows:

1 Attach the special screws 06W-150 and the special washers 06W-170 to the aft side wall assembly 06W-010.

2 Attach the handle assembly 06W-140 to the aft side wall assembly 06W-010.

3 Attach the bushing 06W-145 to the aft side wall assembly 06W-010.

4 Attach the security pins 06W-160 to the handle assembly 06W-140.

SUB TASK 25-41-51-410-091-B01
D2549030610400 D2549030613200

2. Installation of the Side Wall (06W-1)

(a) Attach the fittings 06W-040 with the screws 06W-050 to the aft side wall assembly 06W-010.

(b) Assemble the post assembly 06W-270 as follows:

1 Attach the screws 06W-273.

(c) Attach the post assembly 06W-270 with the screws 06W-280, 06W-300, the washers 06W-250 and the caps 06W-290.

(d) Attach the angle 06W-380 with the screws 06W-390 and the washers 06W-400 to the aft side wall assembly 06W-010.

(e) Attach the angles 06W-220 with the screws 06W-240 and the washers 06W-250 to the aft side wall assembly 06W-010.

(f) Attach the oxygen container assy 06W-230 with the screws 06W-240 and the washers 06W-250 to the angles 06W-220.

(g) Attach the ground cable in accordance with the Process and Material Specification PMS 01-04-58 to the oxygen container assy 06W-230.

(h) Attach the angle 06W-190 with the screws 06W-240 and the washers 06W-250 to the aft side wall assembly 06W-010.

(i) Attach the cover oxygen container assy 06W-180 with the screws 06W-200 and the nuts 06W-210 to the angle 06W-190.

(j) Attach the studs 06W-260 and the washers 06W-250 to the cover oxygen container assy 06W-180.

(k) Attach the screws 06W-320 to the aft side wall assembly 06W-010.

(l) Attach the toilet seat cover dispenser 06W-310 to the screws 06W-320.

(m) Attach the support 06W-330 with the screws 06W-281 and the washers 06W-251 to the aft side wall assembly 06W-010.

(n) Install and assemble the handle assembly 06W-140 as follows:

1 Attach the special screws 06W-150 and the special washers 06W-170 to the aft side wall assembly 06W-010.

2 Attach the handle assembly 06W-140 to the aft side wall assembly 06W-010.

3 Attach the bushing 06W-145 to the aft side wall assembly 06W-010.

4 Attach the security pins 06W-160 to the handle assembly 06W-140.

SUB TASK 25-41-51-410-091-C01
D2549020801600

3. Installation of the Side Wall (06W-1)

(a) Attach the fittings 06W-040 with the screws 06W-050 to the aft side wall assembly 06W-010.

(b) Assemble the post assembly 06W-270 as follows:

1 Attach the screws 06W-273.

(c) Attach the post assembly 06W-270 with the screws 06W-280, 06W-300, the washers 06W-250 and the caps 06W-290.

(d) Attach the angle 06W-380 with the screws 06W-390 and the washers 06W-400 to the aft side wall assembly 06W-010.

(e) Attach the angles 06W-220 with the screws 06W-240 and the washers 06W-250 to the aft side wall assembly 06W-010.

(f) Attach the oxygen container assy 06W-230 with the screws 06W-240 and the washers 06W-250 to the angles 06W-220.

(g) Attach the ground cable in accordance with the Process and Material Specification PMS 01-04-58 to the oxygen container assy 06W-230.

(h) Attach the angle 06W-190 with the screws 06W-240 and the washers 06W-250 to the aft side wall assembly 06W-010.

(i) Attach the cover oxygen container assy 06W-180 with the screws 06W-200 and the nuts 06W-210 to the angle 06W-190.

(j) Attach the studs 06W-260 and the washers 06W-250 to the cover oxygen container assy 06W-180.

(k) Attach the screws 06W-320 to the aft side wall assembly 06W-010.

(l) Attach the toilet seat cover dispenser 06W-310 to the screws 06W-320.

(m) Attach the support 06W-330 with the screws 06W-281 and the washers 06W-251 to the aft side wall assembly 06W-010.

(n) Install and assemble the handle assembly 06W-140 as follows:

1 Attach the special screws 06W-150 and the special washers 06W-170 to the aft side wall assembly 06W-010.

2 Attach the handle assembly 06W-140 to the aft side wall assembly 06W-010.

3 Attach the bushing 06W-145 to the aft side wall assembly 06W-010.

4 Attach the security pins 06W-160 to the handle assembly 06W-140.

SUB TASK 25-41-51-410-091-D01
D2549020513600

4. Installation of the Side Wall (06W-1)

(a) Attach the fittings 06W-040 with the screws 06W-050 to the aft side wall assembly 06W-010.

(b) Assemble the post assembly 06W-270 as follows:

1 Attach the screws 06W-273.

(c) Attach the post assembly 06W-270 with the screws 06W-280, 06W-300, the washers 06W-250 and the caps 06W-290.

(d) Attach the angle 06W-380 with the screws 06W-390 and the washers 06W-400 to the aft side wall assembly 06W-010.

(e) Attach the angles 06W-220 with the screws 06W-240 and the washers 06W-250 to the aft side wall assembly 06W-010.

(f) Attach the oxygen container assy 06W-230 with the screws 06W-240 and the washers 06W-250 to the angles 06W-220.

(g) Attach the ground cable in accordance with the Process and Material Specification PMS 01-04-58 to the oxygen container assy 06W-230.

(h) Attach the angle 06W-190 with the screws 06W-240 and the washers 06W-250 to the aft side wall assembly 06W-010.

(i) Attach the cover oxygen container assy 06W-180 with the screws 06W-200 and the nuts 06W-210 to the angle 06W-190.

(j) Attach the studs 06W-260 and the washers 06W-250 to the cover oxygen container assy 06W-180.

(k) Attach the support 06W-330 with the screws 06W-281 and the washers 06W-251 to the aft side wall assembly 06W-010.

(l) Install and assemble the handle assembly 06W-140 as follows:

1 Attach the special screws 06W-150 and the special washers 06W-170 to the aft side wall assembly 06W-010.

2 Attach the handle assembly 06W-140 to the aft side wall assembly 06W-010.

3 Attach the bushing 06W-145 to the aft side wall assembly 06W-010.

4 Attach the security pins 06W-160 to the handle assembly 06W-140.

SUB TASK 25-41-51-410-091-E01
D2549020802200

5. Installation of the Side Wall (06W-1)

(a) Attach the fittings 06W-040 with the screws 06W-050 to the aft side wall assembly 06W-010.

(b) Assemble the post assembly 06W-270 as follows:

1 Attach the screws 06W-273.

(c) Attach the post assembly 06W-270 with the screws 06W-280, 06W-300, the washers 06W-250 and the caps 06W-290.

(d) Attach the angle 06W-380 with the screws 06W-390 and the washers 06W-400 to the aft side wall assembly 06W-010.

(e) Attach the angles 06W-220 with the screws 06W-240 and the washers 06W-250 to the aft side wall assembly 06W-010.

(f) Attach the oxygen container assy 06W-230 with the screws 06W-240 and the washers 06W-250 to the angles 06W-220.

(g) Attach the ground cable in accordance with the Process and Material Specification PMS 01-04-58 to the oxygen container assy 06W-230.

(h) Attach the angle 06W-190 with the screws 06W-240 and the washers 06W-250 to the aft side wall assembly 06W-010.

(i) Attach the cover oxygen container assy 06W-180 with the screws 06W-200 and the nuts 06W-210 to the angle 06W-190.

(j) Attach the studs 06W-260 and the washers 06W-250 to the cover oxygen container assy 06W-180.

(k) Attach the screws 06W-320 to the aft side wall assembly 06W-010.

(l) Attach the toilet seat cover dispenser 06W-310 to the screws 06W-320.

(m) Install and assemble the handle assemblies 06W-340 as follows:

1 Attach the special screws 06W-350 and the special washers 06W-370 to the aft side wall assembly 06W-010.

2 Attach the handle assemblies 06W-340 to the aft side wall assembly 06W-010.

3 Attach the security pins 06W-360 to the handle assemblies 06W-340.

SUB TASK 25-41-51-410-091-F01
D2549020510400 D2549020800800 D2549020803800 D2549030613800 R225401172-018

6. Installation of the Side Wall (06W-1)

(a) Attach the fittings 06W-040 with the screws 06W-050 to the aft side wall assembly 06W-010.

(b) Assemble the post assembly 06W-270 as follows:

1 Attach the screws 06W-273.

(c) Attach the post assembly 06W-270 with the screws 06W-280, 06W-300, the washers 06W-250 and the caps 06W-290.

(d) Attach the angle 06W-380 with the screws 06W-390 and the washers 06W-400 to the aft side wall assembly 06W-010.

(e) Attach the angles 06W-220 with the screws 06W-240 and the washers 06W-250 to the aft side wall assembly 06W-010.

(f) Attach the oxygen container assy 06W-230 with the screws 06W-240, 06W-242 and the washers 06W-250 to the angles 06W-220.

(g) Attach the ground cable in accordance with the Process and Material Specification PMS 01-04-58 to the oxygen container assy 06W-230.

(h) Attach the angle 06W-190 with the screws 06W-240 and the washers 06W-250 to the aft side wall assembly 06W-010.

(i) Attach the cover oxygen container assy 06W-180 with the screws 06W-200 and the nuts 06W-210 to the angle 06W-190.

(j) Attach the studs 06W-260 and the washers 06W-250 to the cover oxygen container assy 06W-180.

(k) Attach the screws 06W-320 to the aft side wall assembly 06W-010.

(l) Attach the toilet seat cover dispenser 06W-310 to the screws 06W-320.

(m) Install and assemble the handle assemblies 06W-340 as follows:

1 Attach the special screws 06W-350 and the special washers 06W-370 to the aft side wall assembly 06W-010.

2 Attach the handle assemblies 06W-340 to the aft side wall assembly 06W-010.

3 Attach the security pins 06W-360 to the handle assemblies 06W-340.

SUB TASK 25-41-51-410-091-G01
D2549010610200 D2549010610400 D2549020711600 D2549020803000

7. Installation of the Side Wall (06W-1)

(a) Attach the fittings 06W-040 with the screws 06W-050 to the aft side wall assembly 06W-010.

(b) Assemble the post assembly 06W-270 as follows:

1 Attach the screws 06W-273.

(c) Attach the post assembly 06W-270 with the screws 06W-280, 06W-300, the washers 06W-250 and the caps 06W-290.

(d) Attach the angle 06W-380 with the screws 06W-390 and the washers 06W-400 to the aft side wall assembly 06W-010.

(e) Attach the angles 06W-220 with the screws 06W-240 and the washers 06W-250 to the aft side wall assembly 06W-010.

(f) Attach the oxygen container assy 06W-230 with the screws 06W-240 and the washers 06W-250 to the angles 06W-220.

(g) Attach the ground cable in accordance with the Process and Material Specification PMS 01-04-58 to the oxygen container assy 06W-230.

(h) Attach the angle 06W-190 with the screws 06W-240 and the washers 06W-250 to the aft side wall assembly 06W-010.

(i) Attach the cover oxygen container assy 06W-180 with the screws 06W-200 and the nuts 06W-210 to the angle 06W-190.

(j) Attach the studs 06W-260 and the washers 06W-250 to the cover oxygen container assy 06W-180.

(k) Install and assemble the handle assemblies 06W-340 as follows:

1 Attach the special screws 06W-350 and the special washers 06W-370 to the aft side wall assembly 06W-010.

2 Attach the handle assemblies 06W-340 to the aft side wall assembly 06W-010.

3 Attach the security pins 06W-360 to the handle assemblies 06W-340.

TASK 25-41-51-400-819-Y01
D2549010607600 D2549010608600 D2549010608800 D2549010609600 D2549020510600 D2549020513400 D2549020800000 D2549020800400 D2549020800600 D2549020803200 D2549020803400 D2549030400000 D2549030610000 D2549030614800 R225401137-016 R225401145-008 R225401145-014 R225401196-006 R225401196-038 R225401196-052 R225401199-004 R225401600-004 R225401693-000

206. Installation of the Side Wall

A. General

This task gives you the installation and assembly procedures of the component.

B. Job Set-up Information
(1) Consumable Materials

REFERENCE	DESIGNATION
08-007	Sealant, High Temperature

Table 7031
Consumable Materials

C. Procedure

WARNING: **BE CAREFUL WHEN YOU USE SOLVENTS/CLEANING AGENTS, SEALANTS AND OTHER MATERIALS. OBEY THE MATERIAL MANUFACTURER'S INSTRUCTIONS AND THE LOCAL REGULATIONS. MAKE SURE THAT THERE IS A GOOD FLOW OF AIR THROUGH THE WORK AREA. DO NOT BREATHE THE FUMES. DO NOT SMOKE. DO NOT USE THESE MATERIALS NEAR A FLAME, SPARKS OR SOURCES OF HEAT. USE PROTECTIVE CLOTHING, GOGGLES AND GLOVES. IF YOU GET ONE OF THESE MATERIALS ON YOUR SKIN OR IN YOUR EYES, FLUSH IT AWAY WITH A FLOW OF CLEAN WATER. IF YOU GET ONE OF THESE MATERIALS IN YOUR MOUTH, GET IMMEDIATE MEDICAL AID. IN GENERAL, THESE MATERIALS ARE POISONOUS, FLAMMABLE AND SKIN IRRITANTS.**

WARNING: **KEEP ALL HYDROCARBONS (FUELS, LUBRICANTS, ETC.) AWAY FROM ALL SOURCES OF OXYGEN. OXYGEN BECOMES EXPLOSIVE WHEN IT TOUCHES HYDROCARBONS.**

WARNING: **TO PREVENT CONTAMINATION OF THE OXYGEN SYSTEM, MAKE SURE THAT YOUR HANDS AND ALL THE TOOLS ARE CLEAN.**

CAUTION: **DO ALL THE WORK ON A CLEAN, SOFT SURFACE TO PREVENT DAMAGE TO THE COMPONENTS.**

CAUTION: **MAKE SURE THAT ALL THE PARTS ARE CLEAN BEFORE YOU ASSEMBLE THEM.**

SUB TASK 25-41-51-410-092-A01
D2549030614800

1. Installation of the Side Wall (06X-1)

   (a) Attach the fittings 06X-020 with the screws 06X-030 to the aft side wall assembly 06X-010.

   (b) Assemble the post assembly 06X-250 as follows:

      1 Attach the screws 06X-260.

   (c) Attach the post assembly 06X-250 with the screws 06X-280, 06X-300, the washers 06X-230 and the caps 06X-290.

   (d) Assemble the single door emergency unlocking device assembly 06X-410 as follows:

      WARNING: **BE CAREFUL WHEN YOU USE MATERIAL NO. 08-007 SEALANT, HIGH TEMPERATURE. OBEY THE MATERIAL MANUFACTURER'S INSTRUCTIONS.**

      1 Apply the Material No. 08-007 Sealant, High Temperature to the snap catch 06X-460 and to the pin 06X-450 and attach the emergency unlocking-device pivot 06X-440, the snap catch 06X-460 and the pin 06X-450 to the emergency unlocking-device housing 06X-420.

      NOTE: **Adjust the snap catch 06X-460 a half turn before stop.**

      WARNING: **BE CAREFUL WHEN YOU USE MATERIAL NO. 08-007 SEALANT, HIGH TEMPERATURE. OBEY THE MATERIAL MANUFACTURER'S INSTRUCTIONS.**

      2 Apply the Material No. 08-007 Sealant, High Temperature to the bolt 06X-470 and attach the emergency unlocking-device strike 06X-430 with the bolt 06X-470 to the emergency unlocking-device housing 06X-420.

   (e) Attach the single door emergency unlocking device assembly 06X-410 and the plates 06X-480 with the screws 06X-490 and the nuts 06X-500 to the post assembly 06X-250.

   (f) Attach the angle 06X-340 with the screws 06X-280 and the washers 06X-230 to the aft side wall assembly 06X-010.

(g) Attach the angles 06X-200 with the screws 06X-220 and the washers 06X-230 to the aft side wall assembly 06X-010.

(h) Attach the oxygen container assy 06X-210 with the screws 06X-220 and the washers 06X-230 to the angles 06X-200.

(i) Attach the ground cable in accordance with the Process and Material Specification PMS 01-04-58 to the oxygen container assy 06X-210.

(j) Attach the angle 06X-170 with the screws 06X-220 and the washers 06X-230 to the aft side wall assembly 06X-010.

(k) Attach the cover oxygen container assy 06X-160 with the screws 06X-180 and the nuts 06X-190 to the angle 06X-170.

(l) Attach the studs 06X-240 and the washers 06X-230 to the cover oxygen container assy 06X-160.

(m) Attach the coat hook 06X-390 with the screw 06X-400.

(n) Attach the screws 06X-320 to the aft side wall assembly 06X-010.

(o) Attach the toilet seat cover dispenser 06X-310 to the screws 06X-320.

(p) Install and assemble the handle assemblies 06X-350 as follows:

1 Attach the special screws 06X-360 and the special washers 06X-380 to the aft side wall assembly 06X-010.

2 Attach the handle assemblies 06X-350 to the aft side wall assembly 06X-010.

3 Attach the security pins 06X-370 to the handle assemblies 06X-350.

SUB TASK 25-41-51-410-092-B01
D2549010609600 D2549020513400 D2549020800600 R225401137-016 R225401196-006 R225401196-038 R225401196-052 R225401600-004

2. Installation of the Side Wall (06X-1)

(a) Attach the bushing 06X-385.

(b) If removed, attach the kick strip 06X-510 to the aft side wall assembly 06X-010.

(c) Attach the fittings 06X-020 with the screws 06X-030 to the aft side wall assembly 06X-010.

(d) Assemble the post assembly 06X-250 as follows:

1 Attach the screws 06X-260.

(e) Attach the post assembly 06X-250 with the screws 06X-280, 06X-300, the washers 06X-230 and the caps 06X-290.

(f) Attach the angle 06X-340 with the screws 06X-280 and the washers 06X-230 to the aft side wall assembly 06X-010.

(g) Attach the angles 06X-200 with the screws 06X-220 and the washers 06X-230 to the aft side wall assembly 06X-010.

(h) Attach the oxygen container assy 06X-210 with the screws 06X-220, 06X-225 and the washers 06X-227, 06X-230 to the angles 06X-200.

(i) Attach the ground cable in accordance with the Process and Material Specification PMS 01-04-58 to the oxygen container assy 06X-210.

(j) Attach the angle 06X-170 with the screws 06X-220 and the washers 06X-230 to the aft side wall assembly 06X-010.

(k) Attach the cover oxygen container assy 06X-160 with the screws 06X-180 and the nuts 06X-190 to the angle 06X-170.

(l) Attach the studs 06X-240 and the washers 06X-230 to the cover oxygen container assy 06X-160.

(m) Attach the coat hook 06X-390 with the screw 06X-400.

(n) Attach the screws 06X-320 to the aft side wall assembly 06X-010.

(o) Attach the toilet seat cover dispenser 06X-310 to the screws 06X-320.

(p) Attach the support 06X-330 with the screws 06X-281 and the washers 06X-231 to the aft side wall assembly 06X-010.

(q) Install and assemble the handle assembly 06X-120 as follows:

1 Attach the special screws 06X-130 and the special washers 06X-150 to the aft side wall assembly 06X-010.

2 Attach the handle assembly 06X-120 to the aft side wall assembly 06X-010.

3 Attach the security pins 06X-140 to the handle assembly 06X-120.

SUB TASK 25-41-51-410-092-C01
D2549010607600 D2549010608800 R225401145-008 R225401145-014

3. Installation of the Side Wall (06X-1)

(a) Attach the fittings 06X-020 with the screws 06X-030 to the aft side wall assembly 06X-010.

(b) Assemble the post assembly 06X-250 as follows:

1 Attach the screws 06X-260.

(c) Attach the post assembly 06X-250 with the screws 06X-280, 06X-300, the washers 06X-230 and the caps 06X-290.

(d) Attach the angle 06X-340 with the screws 06X-280 and the washers 06X-230 to the aft side wall assembly 06X-010.

(e) Attach the angles 06X-200 with the screws 06X-220 and the washers 06X-230 to the aft side wall assembly 06X-010.

(f) Attach the oxygen container assy 06X-210 with the screws 06X-220, 06X-225 and the washers 06X-230 to the angles 06X-200.

(g) Attach the ground cable in accordance with the Process and Material Specification PMS 01-04-58 to the oxygen container assy 06X-210.

(h) Attach the angle 06X-170 with the screws 06X-220 and the washers 06X-230 to the aft side wall assembly 06X-010.

(i) Attach the cover oxygen container assy 06X-160 with the screws 06X-180 and the nuts 06X-190 to the angle 06X-170.

(j) Attach the studs 06X-240 and the washers 06X-230 to the cover oxygen container assy 06X-160.

(k) Attach the coat hook 06X-390 with the screw 06X-400.

(l) Attach the screws 06X-320 to the aft side wall assembly 06X-010.

(m) Attach the toilet seat cover dispenser 06X-310 to the screws 06X-320.

(n) Attach the support 06X-330 with the screws 06X-281 and the washers 06X-231 to the aft side wall assembly 06X-010.

(o) Install and assemble the handle assembly 06X-120 as follows:

1 Attach the special screws 06X-130 and the special washers 06X-150 to the aft side wall assembly 06X-010.

2 Attach the handle assembly 06X-120 to the aft side wall assembly 06X-010.

3 Attach the security pins 06X-140 to the handle assembly 06X-120.

SUB TASK 25-41-51-410-092-D01
D2549020510600

4. Installation of the Side Wall (06X-1)

(a) Attach the fittings 06X-020 with the screws 06X-030 to the aft side wall assembly 06X-010.

(b) Assemble the post assembly 06X-250 as follows:

1 Attach the screws 06X-260.

(c) Attach the post assembly 06X-250 with the screws 06X-280, 06X-300, the washers 06X-230 and the caps 06X-290.

(d) Attach the angle 06X-340 with the screws 06X-280 and the washers 06X-230 to the aft side wall assembly 06X-010.

(e) Attach the angles 06X-200 with the screws 06X-220 and the washers 06X-230 to the aft side wall assembly 06X-010.

(f) Attach the oxygen container assy 06X-210 with the screws 06X-220 and the washers 06X-230 to the angles 06X-200.

(g) Attach the ground cable in accordance with the Process and Material Specification PMS 01-04-58 to the oxygen container assy 06X-210.

(h) Attach the angle 06X-170 with the screws 06X-220 and the washers 06X-230 to the aft side wall assembly 06X-010.

(i) Attach the cover oxygen container assy 06X-160 with the screws 06X-180 and the nuts 06X-190 to the angle 06X-170.

(j) Attach the studs 06X-240 and the washers 06X-230 to the cover oxygen container assy 06X-160.

(k) Attach the coat hook 06X-390 with the screw 06X-400.

(l) Attach the support 06X-330 with the screws 06X-281 and the washers 06X-231 to the aft side wall assembly 06X-010.

(m) Install and assemble the handle assembly 06X-120 as follows:

1 Attach the special screws 06X-130 and the special washers 06X-150 to the aft side wall assembly 06X-010.

2 Attach the handle assembly 06X-120 to the aft side wall assembly 06X-010.

3 Attach the security pins 06X-140 to the handle assembly 06X-120.

SUB TASK 25-41-51-410-092-E01
D2549010608600 D2549020800000 D2549020800400 D2549020803400

5. Installation of the Side Wall (06X-1)

(a) If removed, attach the kick strip 06X-510 to the aft side wall assembly 06X-010.

(b) Attach the fittings 06X-020 with the screws 06X-030 to the aft side wall assembly 06X-010.

(c) Assemble the post assembly 06X-250 as follows:

1 Attach the screws 06X-260.

(d) Attach the post assembly 06X-250 with the screws 06X-280, 06X-300, the washers 06X-230 and the caps 06X-290.

(e) Attach the angle 06X-340 with the screws 06X-280 and the washers 06X-230 to the aft side wall assembly 06X-010.

(f) Attach the angles 06X-200 with the screws 06X-220 and the washers 06X-230 to the aft side wall assembly 06X-010.

(g) Attach the oxygen container assy 06X-210 with the screws 06X-220 and the washers 06X-230 to the angles 06X-200.

(h) Attach the ground cable in accordance with the Process and Material Specification PMS 01-04-58 to the oxygen container assy 06X-210.

(i) Attach the angle 06X-170 with the screws 06X-220 and the washers 06X-230 to the aft side wall assembly 06X-010.

(j) Attach the cover oxygen container assy 06X-160 with the screws 06X-180 and the nuts 06X-190 to the angle 06X-170.

(k) Attach the studs 06X-240 and the washers 06X-230 to the cover oxygen container assy 06X-160.

(l) Attach the coat hook 06X-390 with the screw 06X-400.

(m) Attach the screws 06X-320 to the aft side wall assembly 06X-010.

(n) Attach the toilet seat cover dispenser 06X-310 to the screws 06X-320.

(o) Install and assemble the handle assemblies 06X-350 as follows:

1 Attach the special screws 06X-360 and the special washers 06X-380 to the aft side wall assembly 06X-010.

2 Attach the handle assemblies 06X-350 to the aft side wall assembly 06X-010.

3 Attach the security pins 06X-370 to the handle assemblies 06X-350.

SUB TASK 25-41-51-410-092-F01
D2549020803200 D2549030400000 R225401693-000

6. Installation of the Side Wall (06X-1)

(a) Attach the fittings 06X-020 with the screws 06X-030 to the aft side wall assembly 06X-010.

(b) Assemble the post assembly 06X-250 as follows:

1 Attach the screws 06X-260.

(c) Attach the post assembly 06X-250 with the screws 06X-280, 06X-300, the washers 06X-230 and the caps 06X-290.

(d) Attach the angle 06X-340 with the screws 06X-280 and the washers 06X-230 to the aft side wall assembly 06X-010.

(e) Attach the angles 06X-200 with the screws 06X-220 and the washers 06X-230 to the aft side wall assembly 06X-010.

(f) Attach the oxygen container assy 06X-210 with the screws 06X-220, 06X-225 and the washers 06X-230 to the angles 06X-200.

(g) Attach the ground cable in accordance with the Process and Material Specification PMS 01-04-58 to the oxygen container assy 06X-210.

(h) Attach the angle 06X-170 with the screws 06X-220 and the washers 06X-230 to the aft side wall assembly 06X-010.

(i) Attach the cover oxygen container assy 06X-160 with the screws 06X-180 and the nuts 06X-190 to the angle 06X-170.

(j) Attach the studs 06X-240 and the washers 06X-230 to the cover oxygen container assy 06X-160.

(k) Attach the coat hook 06X-390 with the screw 06X-400.

(l) Attach the screws 06X-320 to the aft side wall assembly 06X-010.

(m) Attach the toilet seat cover dispenser 06X-310 to the screws 06X-320.

(n) Install and assemble the handle assemblies 06X-350 as follows:

1 Attach the special screws 06X-360 and the special washers 06X-380 to the aft side wall assembly 06X-010.

2 Attach the handle assemblies 06X-350 to the aft side wall assembly 06X-010.

3 Attach the security pins 06X-370 to the handle assemblies 06X-350.

SUB TASK 25-41-51-410-092-G01
D2549030610000 R225401199-004

7. Installation of the Side Wall (06X-1)

(a) Attach the fittings 06X-020 with the screws 06X-030 to the aft side wall assembly 06X-010.

(b) Assemble the post assembly 06X-250 as follows:

1 Attach the screws 06X-260.

(c) Attach the post assembly 06X-250 with the screws 06X-280, 06X-300, the washers 06X-230 and the caps 06X-290.

(d) Attach the angle 06X-340 with the screws 06X-280 and the washers 06X-230 to the aft side wall assembly 06X-010.

(e) Attach the angles 06X-200 with the screws 06X-220 and the washers 06X-230 to the aft side wall assembly 06X-010.

(f) Attach the oxygen container assy 06X-210 with the screws 06X-220 and the washers 06X-230 to the angles 06X-200.

(g) Attach the ground cable in accordance with the Process and Material Specification PMS 01-04-58 to the oxygen container assy 06X-210.

(h) Attach the angle 06X-170 with the screws 06X-220 and the washers 06X-230 to the aft side wall assembly 06X-010.

(i) Attach the cover oxygen container assy 06X-160 with the screws 06X-180 and the nuts 06X-190 to the angle 06X-170.

(j) Attach the studs 06X-240 and the washers 06X-230 to the cover oxygen container assy 06X-160.

(k) Attach the coat hook 06X-390 with the screw 06X-400.

(l) Install and assemble the handle assemblies 06X-350 as follows:

1 Attach the special screws 06X-360 and the special washers 06X-380 to the aft side wall assembly 06X-010.

2 Attach the handle assemblies 06X-350 to the aft side wall assembly 06X-010.

3 Attach the security pins 06X-370 to the handle assemblies 06X-350.

TASK 25-41-51-400-819-Z01

D2547160900200 D2547160900400 D2547161903000 D2549010400000 D2549010400200
D2549010400400 D2549010400600 D2549010400800 D2549010401000 D2549010401400
D2549010401600 D2549010401800 D2549010402000 D2549010402200 D2549010402400
D2549010402600 D2549010402800 D2549010403000 D2549010403200 D2549010403400
D2549010403600 D2549010403800 D2549010404000 D2549010404200 D2549010404400
D2549010404600 D2549010404800 D2549010405000 D2549010405200 D2549010405400
D2549010405600 D2549010405800 D2549010406000 D2549010406200 D2549010406400
D2549010406800 D2549010407000 D2549010504200 D2549010504400 D2549010507400
D2549010511200 D2549010512600 D2549010514200 D2549010601800 D2549010609200
D2549010610600 D2549010610800 D2549010611000 D2549010611200 D2549010611400
D2549010611600 D2549010612000 D2549010612200 D2549010612400 D2549010612600
D2549010613000 D2549010613200 D2549010613400 D2549010613600 D2549010613800
D2549010614200 D2549010614400 D2549010614600 D2549010614800 D2549020300000
D2549020300400 D2549020300600 D2549020300800 D2549020301000 D2549020301600
D2549020301800 D2549020302000 D2549020302800 D2549020400000 D2549020400200
D2549020400400 D2549020400600 D2549020400800 D2549020401000 D2549020401200
D2549020401400 D2549020401600 D2549020402000 D2549020402200 D2549020402400
D2549020402600 D2549020403000 D2549020403200 D2549020403400 D2549020403600
D2549020403800 D2549020404000 D2549020404200 D2549020404400 D2549020404600
D2549020405200 D2549020405400 D2549020405600 D2549020405800 D2549020406000
D2549020406200 D2549020406400 D2549020406600 D2549020406800 D2549020407000
D2549020407200 D2549020407400 D2549020407600 D2549020407800 D2549020408000
D2549020408200 D2549020408600 D2549020408800 D2549020409000 D2549020409200
D2549020409400 D2549020409600 D2549020409800 D2549020410200 D2549020410400
D2549020410600 D2549020410800 D2549020411000 D2549020411200 D2549020411400
D2549020411600 D2549020411800 D2549020412000 D2549020412200 D2549020412400
D2549020412600 D2549020412800 D2549020413000 D2549020413200 D2549020413400
D2549020413600 D2549020413800 D2549020414000 D2549020414200 D2549020414600
D2549020414800 D2549020505400 D2549020505800 D2549020513200 D2549020513800
D2549020603200 D2549020608800 D2549020706400 D2549020713000 D2549020714000
D2549020800200 D2549020801200 D2549020801400 D2549020801800 D2549020802400
D2549020802600 D2549020804000 D2549020804200 D2549020804400 D2549020804800
D2549020805200 D2549020805400 D2549020805600 D2549020805800 D2549020806000
D2549020806200 D2549020806400 D2549020806600 D2549020806800 D2549020807000
D2549020807200 D2549020807400 D2549020807600 D2549020807800 D2549020808400
D2549020808600 D2549020808800 D2549020809000 D2549020809400 D2549020809600
D2549020810000 D2549020810200 D2549020810400 D2549020810600 D2549020810800
D2549020811200 D2549020811400 D2549020811600 D2549020811800 D2549020812000
D2549020812200 D2549020812400 D2549020812600 D2549020813000 D2549020813200
D2549020813400 D2549020813600 D2549020813800 D2549020814000 D2549020814400
D2549020814600 D2549020814800 D2549030400600 D2549030401000 D2549030401200
D2549030401400 D2549030401800 D2549030402000 D2549030402200 D2549030402400
D2549030402600 D2549030402800 D2549030403400 D2549030403600 D2549030404000
D2549030404200 D2549030404400 D2549030404600 D2549030404800 D2549030405000
D2549030405200 D2549030405400 D2549030405600 D2549030405800 D2549030406000
D2549030406400 D2549030406600 D2549030406800 D2549030407000 D2549030407200

D2549030407600 D2549030407800 D2549030408000 D2549030408200 D2549030408400
D2549030408600 D2549030409000 D2549030409200 D2549030409400 D2549030409600
D2549030409800 D2549030410000 D2549030410200 D2549030410400 D2549030410600
D2549030410800 D2549030411200 D2549030411400 D2549030411600 D2549030411800
D2549030412000 D2549030412200 D2549030412400 D2549030412600 D2549030412800
D2549030413000 D2549030413200 D2549030413400 D2549030413600 D2549030414000
D2549030414200 D2549030414400 D2549030414600 D2549030414800 D2549030502200
D2549030509000 D2549030603200 D2549030608400 D2549030612000 D2549030612200
D2549030612400 D2549030612600 D2549030613600 D2549030614000 D2549030700000
D2549030700200 D2549030700400 D2549030700600 D2549030700800 D2549030701000
D2549030701200 D2549030701400 D2549030701600 D2549030701800 D2549030702000
D2549030702200 D2549030702400 D2549030702600 D2549030702800 D2549030703000
D2549030703200 D2549030703400 D2549030703600 D2549030703800 D2549030704000
D2549030704200 D2549030704400 D2549030704600 D2549030704800 D2549030705200
D2549030705600 D2549040500200 D2549040500400 D2549040500600 D2549040500800
D2549040501000 D2549040501200 D2549040501400 D2549040501600 D2549040501800
D2549040502000 R225401107-002 R225401134-014 R225401134-030 R225401134-032
R225401134-034 R225401134-036 R225401134-038 R225401136-004 R225401136-006
R225401136-008 R225401136-012 R225401136-014 R225401136-018 R225401136-024
R225401145-010 R225401152-008 R225401152-010 R225401168-008 R225401168-010
R225401168-012 R225401168-024 R225401168-026 R225401183-004 R225401183-006
R225401192-002 R225401196-008 R225401196-010 R225401196-012 R225401196-014
R225401196-016 R225401196-018 R225401196-020 R225401196-022 R225401196-024
R225401196-040 R225401196-042 R225401196-044 R225401196-054 R225401196-056
R225401196-058 R225401196-060 R225401196-062 R225401196-064 R225401196-066
R225401196-068 R225401196-070 R225401199-002 R225401199-006 R225401199-012
R225401602-000 R225401609-000 R225401611-000 R225401611-006 R225401611-010
R225401611-012 R225401611-014 R225401611-016 R225401611-018 R225401611-020
R225401622-000 R225401622-002 R225401624-000 R225401627-000 R225401627-002
R225401627-004 R225401639-000 R225401639-002 R225401643-000 R225401643-002
R225401643-004 R225401643-006 R225401643-008 R225401646-000 R225401646-002
R225401647-000 R225401648-000 R225401648-002 R225401648-004 R225401648-006
R225401648-008 R225401649-000 R225401656-000 R225401656-002 R225401658-000
R225401662-000 R225401662-002 R225401671-000 R225401671-002 R225401673-000
R225401673-002 R225401673-004 R225401673-006 R225401675-000 R225401676-000
R225401683-000 R225401685-000 R225401685-002 R225401688-000 R225401689-004
R225401689-006 R225401691-000 R225401691-002 R225401697-000 R225401697-002
R225401803-000 R225401803-002 R225401808-000 R225401811-000 R225401814-000

207. Installation of the Side Wall

A. General

This task gives you the installation and assembly procedures of the component.

B. Job Set-up Information

(1) Not applicable

C. Procedure

WARNING: **BE CAREFUL WHEN YOU USE SOLVENTS/CLEANING AGENTS, SEALANTS AND OTHER MATERIALS. OBEY THE MATERIAL MANUFACTURER'S INSTRUCTIONS AND THE LOCAL REGULATIONS. MAKE SURE THAT THERE IS A GOOD FLOW OF AIR THROUGH THE WORK AREA. DO NOT BREATHE THE FUMES. DO NOT SMOKE. DO NOT USE THESE MATERIALS NEAR A FLAME, SPARKS OR SOURCES OF HEAT. USE PROTECTIVE CLOTHING, GOGGLES AND GLOVES. IF YOU GET ONE OF THESE MATERIALS ON YOUR SKIN OR IN YOUR EYES, FLUSH IT AWAY WITH A FLOW OF CLEAN WATER. IF YOU GET ONE OF THESE MATERIALS IN YOUR MOUTH, GET IMMEDIATE MEDICAL AID. IN GENERAL, THESE MATERIALS ARE POISONOUS, FLAMMABLE AND SKIN IRRITANTS.**

WARNING: **KEEP ALL HYDROCARBONS (FUELS, LUBRICANTS, ETC.) AWAY FROM ALL SOURCES OF OXYGEN. OXYGEN BECOMES EXPLOSIVE WHEN IT TOUCHES HYDROCARBONS.**

WARNING: **TO PREVENT CONTAMINATION OF THE OXYGEN SYSTEM, MAKE SURE THAT YOUR HANDS AND ALL THE TOOLS ARE CLEAN.**

CAUTION: **DO ALL THE WORK ON A CLEAN, SOFT SURFACE TO PREVENT DAMAGE TO THE COMPONENTS.**

CAUTION: **MAKE SURE THAT ALL THE PARTS ARE CLEAN BEFORE YOU ASSEMBLE THEM.**

SUB TASK 25-41-51-410-093-A01
D2549010611600 D2549010612000

1. Installation of the Side Wall (06Y-1)

(a) Attach the fittings 06Y-020 with the screws 06Y-030 to the aft side wall assembly 06Y-010.

(b) Assemble the post assembly 06Y-210 as follows:

1 Attach the screws 06Y-220.

(c) Attach the post assembly 06Y-210 with the screws 06Y-240, 06Y-260, the washers 06Y-190 and the caps 06Y-250.

(d) Attach the angle 06Y-320 with the screws 06Y-240 and the washers 06Y-190 to the aft side wall assembly 06Y-010.

(e) Attach the angles 06Y-160 with the screws 06Y-180 and the washers 06Y-190 to the aft side wall assembly 06Y-010.

(f) Attach the oxygen container assy 06Y-170 with the screws 06Y-180 and the washers 06Y-190 to the angles 06Y-160.

(g) Attach the ground cable in accordance with the Process and Material Specification PMS 01-04-58 to the oxygen container assy 06Y-170.

(h) Attach the angle 06Y-130 with the screws 06Y-180 and the washers 06Y-190 to the aft side wall assembly 06Y-010.

(i) Attach the cover oxygen container assy 06Y-120 with the screws 06Y-140 and the nuts 06Y-150 to the angle 06Y-130.

(j) Attach the studs 06Y-200 and the washers 06Y-190 to the cover oxygen container assy 06Y-120.

(k) Attach the screws 06Y-390 and the washers 06Y-400 to the aft side wall assembly 06Y-010.

(l) Attach the toilet seat cover dispenser 06Y-370 to the screws 06Y-390.

(m) Install and assemble the handle assemblies 06Y-330 as follows:

1 Attach the special screws 06Y-340 and the special washers 06Y-360 to the aft side wall assembly 06Y-010.

2 Attach the handle assemblies 06Y-330 to the aft side wall assembly 06Y-010.

3 Attach the security pins 06Y-350 to the handle assemblies 06Y-330.

SUB TASK 25-41-51-410-093-B01
D2549030402000 D2549030402600 D2549030403400 D2549030404600 D2549030405200 R225401134-030 R225401134-032 R225401134-034 R225401134-036

2. Installation of the Side Wall (06Y-1)

(a) Attach the fittings 06Y-020 with the screws 06Y-030 to the aft side wall assembly 06Y-010.

(b) Assemble the post assembly 06Y-210 as follows:

1 Attach the screws 06Y-220.

(c) Attach the post assembly 06Y-210 with the screws 06Y-240, 06Y-260, the washers 06Y-190 and the caps 06Y-250.

(d) Attach the angle 06Y-320 with the screws 06Y-240 and the washers 06Y-190 to the aft side wall assembly 06Y-010.

(e) Attach the angles 06Y-160 with the screws 06Y-180 and the washers 06Y-190 to the aft side wall assembly 06Y-010.

(f) Attach the oxygen container assy 06Y-170 with the screws 06Y-180, 06Y-182 and the washers 06Y-190 to the angles 06Y-160.

(g) Attach the ground cable in accordance with the Process and Material Specification PMS 01-04-58 to the oxygen container assy 06Y-170.

(h) Attach the angle 06Y-130 with the screws 06Y-180 and the washers 06Y-190 to the aft side wall assembly 06Y-010.

(i) Attach the cover oxygen container assy 06Y-120 with the screws 06Y-140 and the nuts 06Y-150 to the angle 06Y-130.

(j) Attach the studs 06Y-200 and the washers 06Y-190 to the cover oxygen container assy 06Y-120.

(k) Attach the screws 06Y-380 to the aft side wall assembly 06Y-010.

(l) Attach the toilet seat cover dispenser 06Y-370 to the screws 06Y-380.

(m) Attach the support 06Y-310 with the screws 06Y-241 and the washers 06Y-191 to the aft side wall assembly 06Y-010.

(n) Install and assemble the handle assembly 06Y-270 as follows:

1 Attach the special screws 06Y-280 and the special washers 06Y-300 to the aft side wall assembly 06Y-010.

2 Attach the handle assembly 06Y-270 to the aft side wall assembly 06Y-010.

3 Attach the security pins 06Y-290 to the handle assembly 06Y-270.

SUB TASK 25-41-51-410-093-C01
D2549010609200

3. Installation of the Side Wall (06Y-1)

(a) Attach the fittings 06Y-020 with the screws 06Y-030 to the aft side wall assembly 06Y-010.

(b) Assemble the post assembly 06Y-210 as follows:

1 Attach the screws 06Y-220.

(c) Attach the post assembly 06Y-210 with the screws 06Y-240, 06Y-260, the washers 06Y-190 and the caps 06Y-250.

(d) Attach the angle 06Y-320 with the screws 06Y-240 and the washers 06Y-190 to the aft side wall assembly 06Y-010.

(e) Attach the angles 06Y-160 with the screws 06Y-180 and the washers 06Y-190 to the aft side wall assembly 06Y-010.

(f) Attach the oxygen container assy 06Y-170 with the screws 06Y-180 and the washers 06Y-190 to the angles 06Y-160.

(g) Attach the ground cable in accordance with the Process and Material Specification PMS 01-04-58 to the oxygen container assy 06Y-170.

(h) Attach the angle 06Y-130 with the screws 06Y-180 and the washers 06Y-190 to the aft side wall assembly 06Y-010.

(i) Attach the cover oxygen container assy 06Y-120 with the screws 06Y-140 and the nuts 06Y-150 to the angle 06Y-130.

(j) Attach the studs 06Y-200 and the washers 06Y-190 to the cover oxygen container assy 06Y-120.

(k) Attach the screws 06Y-380 to the aft side wall assembly 06Y-010.

(l) Attach the toilet seat cover dispenser 06Y-370 to the screws 06Y-380.

(m) Attach the support 06Y-310 with the screws 06Y-241 and the washers 06Y-191 to the aft side wall assembly 06Y-010.

(n) Install and assemble the handle assembly 06Y-270 as follows:

1 Attach the special screws 06Y-280 and the special washers 06Y-300 to the aft side wall assembly 06Y-010.

2 Attach the handle assembly 06Y-270 to the aft side wall assembly 06Y-010.

3 Attach the security pins 06Y-290 to the handle assembly 06Y-270.

SUB TASK 25-41-51-410-093-D01
D2549010614400 D2549020801200 D2549020805400 D2549030404000 D2549030603200 D2549030613600

4. Installation of the Side Wall (06Y-1)

(a) Attach the fittings 06Y-020 with the screws 06Y-030 to the aft side wall assembly 06Y-010.

(b) Assemble the post assembly 06Y-210 as follows:

1 Attach the screws 06Y-220.

(c) Attach the post assembly 06Y-210 with the screws 06Y-240, 06Y-260, the washers 06Y-190 and the caps 06Y-250.

(d) Attach the angle 06Y-320 with the screws 06Y-240 and the washers 06Y-190 to the aft side wall assembly 06Y-010.

(e) Attach the angles 06Y-160 with the screws 06Y-180 and the washers 06Y-190 to the aft side wall assembly 06Y-010.

(f) Attach the oxygen container assy 06Y-170 with the screws 06Y-180 and the washers 06Y-190 to the angles 06Y-160.

(g) Attach the ground cable in accordance with the Process and Material Specification PMS 01-04-58 to the oxygen container assy 06Y-170.

(h) Attach the angle 06Y-130 with the screws 06Y-180 and the washers 06Y-190 to the aft side wall assembly 06Y-010.

(i) Attach the cover oxygen container assy 06Y-120 with the screws 06Y-140 and the nuts 06Y-150 to the angle 06Y-130.

(j) Attach the studs 06Y-200 and the washers 06Y-190 to the cover oxygen container assy 06Y-120.

(k) Attach the screws 06Y-380 to the aft side wall assembly 06Y-010.

(l) Attach the toilet seat cover dispenser 06Y-370 to the screws 06Y-380.

(m) Install and assemble the handle assemblies 06Y-330 as follows:

1 Attach the special screws 06Y-340 and the special washers 06Y-360 to the aft side wall assembly 06Y-010.

2 Attach the handle assemblies 06Y-330 to the aft side wall assembly 06Y-010.

3 Attach the security pins 06Y-350 to the handle assemblies 06Y-330.

SUB TASK 25-41-51-410-093-E01
D2549030401200 D2549030402800 D2549030612400

5. Installation of the Side Wall (06Y-1)

(a) Attach the fittings 06Y-020 with the screws 06Y-030 to the aft side wall assembly 06Y-010.

(b) Assemble the post assembly 06Y-210 as follows:

1 Attach the screws 06Y-220.

(c) Attach the post assembly 06Y-210 with the screws 06Y-240, 06Y-260, the washers 06Y-190 and the caps 06Y-250.

(d) Attach the angle 06Y-320 with the screws 06Y-240 and the washers 06Y-190 to the aft side wall assembly 06Y-010.

(e) Attach the angles 06Y-160 with the screws 06Y-180 and the washers 06Y-190 to the aft side wall assembly 06Y-010.

(f) Attach the oxygen container assy 06Y-170 with the screws 06Y-180 and the washers 06Y-190 to the angles 06Y-160.

(g) Attach the ground cable in accordance with the Process and Material Specification PMS 01-04-58 to the oxygen container assy 06Y-170.

(h) Attach the angle 06Y-130 with the screws 06Y-180 and the washers 06Y-190 to the aft side wall assembly 06Y-010.

(i) Attach the cover oxygen container assy 06Y-120 with the screws 06Y-140 and the nuts 06Y-150 to the angle 06Y-130.

(j) Attach the studs 06Y-200 and the washers 06Y-190 to the cover oxygen container assy 06Y-120.

(k) Attach the support 06Y-310 with the screws 06Y-241 and the washers 06Y-191 to the aft side wall assembly 06Y-010.

(l) Install and assemble the handle assembly 06Y-270 as follows:

1 Attach the special screws 06Y-280 and the special washers 06Y-300 to the aft side wall assembly 06Y-010.

2 Attach the handle assembly 06Y-270 to the aft side wall assembly 06Y-010.

3 Attach the security pins 06Y-290 to the handle assembly 06Y-270.

SUB TASK 25-41-51-410-093-F01
D2549020807400 D2549020809400 D2549030402200 D2549030405400 D2549030407200 D2549030612600 R225401168-008 R225401168-010 R225401168-012 R225401168-024 R225401168-026

6. Installation of the Side Wall (06Y-1)

(a) Attach the fittings 06Y-020 with the screws 06Y-030 to the aft side wall assembly 06Y-010.

(b) Assemble the post assembly 06Y-210 as follows:

1 Attach the screws 06Y-220.

(c) Attach the post assembly 06Y-210 with the screws 06Y-240, 06Y-260, the washers 06Y-190 and the caps 06Y-250.

(d) Attach the angle 06Y-320 with the screws 06Y-240 and the washers 06Y-190 to the aft side wall assembly 06Y-010.

(e) Attach the angles 06Y-160 with the screws 06Y-180 and the washers 06Y-190 to the aft side wall assembly 06Y-010.

(f) Attach the oxygen container assy 06Y-170 with the screws 06Y-180, 06Y-182 and the washers 06Y-190 to the angles 06Y-160.

(g) Attach the ground cable in accordance with the Process and Material Specification PMS 01-04-58 to the oxygen container assy 06Y-170.

(h) Attach the angle 06Y-130 with the screws 06Y-180 and the washers 06Y-190 to the aft side wall assembly 06Y-010.

(i) Attach the cover oxygen container assy 06Y-120 with the screws 06Y-140 and the nuts 06Y-150 to the angle 06Y-130.

(j) Attach the studs 06Y-200 and the washers 06Y-190 to the cover oxygen container assy 06Y-120.

(k) Install and assemble the handle assemblies 06Y-330 as follows:

1 Attach the special screws 06Y-340 and the special washers 06Y-360 to the aft side wall assembly 06Y-010.

2 Attach the handle assemblies 06Y-330 to the aft side wall assembly 06Y-010.

3 Attach the security pins 06Y-350 to the handle assemblies 06Y-330.

SUB TASK 25-41-51-410-093-G01
D2549020800200 D2549030612000 D2549030612200 R225401199-006 R225401611-010

7. Installation of the Side Wall (06Y-1)

(a) Attach the fittings 06Y-020 with the screws 06Y-030 to the aft side wall assembly 06Y-010.

(b) Assemble the post assembly 06Y-210 as follows:

1 Attach the screws 06Y-220.

(c) Attach the post assembly 06Y-210 with the screws 06Y-240, 06Y-260, the washers 06Y-190 and the caps 06Y-250.

(d) Attach the angle 06Y-320 with the screws 06Y-240 and the washers 06Y-190 to the aft side wall assembly 06Y-010.

(e) Attach the angles 06Y-160 with the screws 06Y-180 and the washers 06Y-190 to the aft side wall assembly 06Y-010.

(f) Attach the oxygen container assy 06Y-170 with the screws 06Y-180, 06Y-182 and the washers 06Y-190 to the angles 06Y-160.

(g) Attach the ground cable in accordance with the Process and Material Specification PMS 01-04-58 to the oxygen container assy 06Y-170.

(h) Attach the angle 06Y-130 with the screws 06Y-180 and the washers 06Y-190 to the aft side wall assembly 06Y-010.

(i) Attach the cover oxygen container assy 06Y-120 with the screws 06Y-140 and the nuts 06Y-150 to the angle 06Y-130.

(j) Attach the studs 06Y-200 and the washers 06Y-190 to the cover oxygen container assy 06Y-120.

(k) Install and assemble the handle assemblies 06Y-330 as follows:

1 Attach the special screws 06Y-340 and the special washers 06Y-360 to the aft side wall assembly 06Y-010.

2 Attach the handle assemblies 06Y-330 to the aft side wall assembly 06Y-010.

3 Attach the security pins 06Y-350 to the handle assemblies 06Y-330.

SUB TASK 25-41-51-410-093-H01

D2547160900200 D2547160900400 D2547161903000 D2549010400000
D2549010400200 D2549010400400 D2549010400600 D2549010400800
D2549010401000 D2549010401400 D2549010401600 D2549010401800
D2549010402000 D2549010402200 D2549010402400 D2549010402600
D2549010402800 D2549010403000 D2549010403200 D2549010403400
D2549010403600 D2549010403800 D2549010404000 D2549010404200
D2549010404400 D2549010404600 D2549010404800 D2549010405000
D2549010405200 D2549010405400 D2549010405600 D2549010405800
D2549010406000 D2549010406200 D2549010406400 D2549010406800
D2549010407000 D2549010504200 D2549010504400 D2549010507400
D2549010511200 D2549010512600 D2549010514200 D2549010601800
D2549010610600 D2549010610800 D2549010611000 D2549010611200
D2549010611400 D2549010612200 D2549010612400 D2549010612600
D2549010613000 D2549010613200 D2549010613400 D2549010613600
D2549010613800 D2549010614200 D2549010614600 D2549010614800
D2549020300000 D2549020300400 D2549020300600 D2549020300800
D2549020301000 D2549020301600 D2549020301800 D2549020302000
D2549020302800 D2549020400000 D2549020400200 D2549020400400
D2549020400600 D2549020400800 D2549020401000 D2549020401200
D2549020401400 D2549020401600 D2549020402000 D2549020402200
D2549020402400 D2549020402600 D2549020403000 D2549020403200
D2549020403400 D2549020403600 D2549020403800 D2549020404000
D2549020404200 D2549020404400 D2549020404600 D2549020405200
D2549020405400 D2549020405600 D2549020405800 D2549020406000
D2549020406200 D2549020406400 D2549020406600 D2549020406800
D2549020407000 D2549020407200 D2549020407400 D2549020407600

D2549020407800 D2549020408000 D2549020408200 D2549020408600
D2549020408800 D2549020409000 D2549020409200 D2549020409400
D2549020409600 D2549020409800 D2549020410200 D2549020410400
D2549020410600 D2549020410800 D2549020411000 D2549020411200
D2549020411400 D2549020411600 D2549020411800 D2549020412000
D2549020412200 D2549020412400 D2549020412600 D2549020412800
D2549020413000 D2549020413200 D2549020413400 D2549020413600
D2549020413800 D2549020414000 D2549020414200 D2549020414600
D2549020414800 D2549020505400 D2549020505800 D2549020513200
D2549020513800 D2549020603200 D2549020608800 D2549020706400
D2549020713000 D2549020714000 D2549020801400 D2549020801800
D2549020802400 D2549020802600 D2549020804000 D2549020804200
D2549020804400 D2549020804800 D2549020805200 D2549020805600
D2549020805800 D2549020806000 D2549020806200 D2549020806400
D2549020806600 D2549020806800 D2549020807000 D2549020807200
D2549020807600 D2549020807800 D2549020808400 D2549020808600
D2549020808800 D2549020809000 D2549020809600 D2549020810000
D2549020810200 D2549020810400 D2549020810600 D2549020810800
D2549020811200 D2549020811400 D2549020811600 D2549020811800
D2549020812000 D2549020812200 D2549020812400 D2549020812600
D2549020813000 D2549020813200 D2549020813400 D2549020813600
D2549020813800 D2549020814000 D2549020814400 D2549020814600
D2549020814800 D2549030400600 D2549030401000 D2549030401400
D2549030401800 D2549030402400 D2549030403600 D2549030404200
D2549030404400 D2549030404800 D2549030405000 D2549030405600
D2549030405800 D2549030406000 D2549030406400 D2549030406600
D2549030406800 D2549030407000 D2549030407600 D2549030407800
D2549030408000 D2549030408200 D2549030408400 D2549030408600
D2549030409000 D2549030409200 D2549030409400 D2549030409600
D2549030409800 D2549030410000 D2549030410200 D2549030410400
D2549030410600 D2549030410800 D2549030411200 D2549030411400
D2549030411600 D2549030411800 D2549030412000 D2549030412200
D2549030412400 D2549030412600 D2549030412800 D2549030413000
D2549030413200 D2549030413400 D2549030413600 D2549030414000
D2549030414200 D2549030414400 D2549030414600 D2549030414800
D2549030502200 D2549030509000 D2549030608400 D2549030614000
D2549030700000 D2549030700200 D2549030700400 D2549030700600
D2549030700800 D2549030701000 D2549030701200 D2549030701400
D2549030701600 D2549030701800 D2549030702000 D2549030702200
D2549030702400 D2549030702600 D2549030702800 D2549030703000
D2549030703200 D2549030703400 D2549030703600 D2549030703800
D2549030704000 D2549030704200 D2549030704400 D2549030704600
D2549030704800 D2549030705200 D2549030705600 D2549040500200
D2549040500400 D2549040500600 D2549040500800 D2549040501000
D2549040501200 D2549040501400 D2549040501600 D2549040501800
D2549040502000 R225401107-002 R225401134-014 R225401134-038 R225401136-
004 R225401136-006 R225401136-008 R225401136-012 R225401136-014 R225401136-

018 R225401136-024 R225401145-010 R225401152-008 R225401152-010 R225401183-004 R225401183-006 R225401192-002 R225401196-008 R225401196-010 R225401196-012 R225401196-014 R225401196-016 R225401196-018 R225401196-020 R225401196-022 R225401196-024 R225401196-040 R225401196-042 R225401196-044 R225401196-054 R225401196-056 R225401196-058 R225401196-060 R225401196-062 R225401196-064 R225401196-066 R225401196-068 R225401196-070 R225401199-002 R225401199-012 R225401602-000 R225401609-000 R225401611-000 R225401611-006 R225401611-012 R225401611-014 R225401611-016 R225401611-018 R225401611-020 R225401622-000 R225401622-002 R225401624-000 R225401627-000 R225401627-002 R225401627-004 R225401639-000 R225401639-002 R225401643-000 R225401643-002 R225401643-004 R225401643-006 R225401643-008 R225401646-000 R225401646-002 R225401647-000 R225401648-000 R225401648-002 R225401648-004 R225401648-006 R225401648-008 R225401649-000 R225401656-000 R225401656-002 R225401658-000 R225401662-000 R225401662-002 R225401671-000 R225401671-002 R225401673-000 R225401673-002 R225401673-004 R225401673-006 R225401675-000 R225401676-000 R225401683-000 R225401685-000 R225401685-002 R225401688-000 R225401689-004 R225401689-006 R225401691-000 R225401691-002 R225401697-000 R225401697-002 R225401803-000 R225401803-002 R225401808-000 R225401811-000 R225401814-000

8. Installation of the Side Wall

   (a) Not applicable.

TASK 25-41-51-400-820-A01

D2549010500000 D2549010500400 D2549010500600 D2549010500800 D2549010501200 D2549010501400 D2549010501600 D2549010501800 D2549010502200 D2549010502600 D2549010502800 D2549010503200 D2549010503400 D2549010503600 D2549010503800 D2549010504600 D2549010504800 D2549010505000 D2549010505200 D2549010505400 D2549010505600 D2549010505800 D2549010506000 D2549010506200 D2549010506400 D2549010506800 D2549010507000 D2549010507200 D2549010507600 D2549010507800 D2549010508200 D2549010508400 D2549010508600 D2549010508800 D2549010509000 D2549010509200 D2549010509400 D2549010509600 D2549010509800 D2549010510800 D2549010511000 D2549010511400 D2549010512000 D2549010512200 D2549010512400 D2549010513400 D2549010513600 D2549020500000 D2549020500200 D2549020500400 D2549020500600 D2549020500800 D2549020501000 D2549020501200 D2549020501400 D2549020501800 D2549020502000 D2549020502400 D2549020502600 D2549020502800 D2549020503200 D2549020503600 D2549020504200 D2549020504600 D2549020504800 D2549020505000 D2549020505200 D2549020506000 D2549020506200 D2549020506400 D2549020600000 D2549020600200 D2549020600800 D2549020601000 D2549020601400 D2549020601600 D2549020601800 D2549020602000 D2549020602400 D2549020602600 D2549020602800 D2549020603400 D2549020603600 D2549020603800 D2549020604000 D2549020604200 D2549020604400 D2549020605000 D2549020605200 D2549020605400 D2549020605600 D2549020606400 D2549020606600 D2549020607000 D2549020607200 D2549020607400 D2549020607800 D2549020608400 D2549020609200 D2549020609400 D2549020610400 D2549020611400 D2549020611800 D2549030500400 D2549030500600 D2549030500800 D2549030501000 D2549030501200 D2549030501400 D2549030502000 D2549030502600 D2549030502800 D2549030503000 D2549030503400 D2549030503600 D2549030504000 D2549030504600 D2549030504800 D2549030505200 D2549030505600 D2549030506000 D2549030506400 D2549030507000 R225401133-000 R225401134-000 R225401134-002 R225401136-016 R225401137-000 R225401137-002 R225401139-000 R225401145-000 R225401146-000 R225401146-002 R225401159-000 R225401160-002 R225401172-002 R225401188-000 R225401188-002 R225401188-004 R225401188-006

208. Installation of the Rear Wall

A. General

This task gives you the installation and assembly procedures of the component.

B. Procedure

WARNING: **BE CAREFUL WHEN YOU USE SOLVENTS/CLEANING AGENTS, SEALANTS AND OTHER MATERIALS. OBEY THE MATERIAL MANUFACTURER'S INSTRUCTIONS AND THE LOCAL REGULATIONS. MAKE SURE THAT THERE IS A GOOD FLOW OF AIR THROUGH THE WORK AREA. DO NOT BREATHE THE FUMES. DO NOT SMOKE. DO NOT USE THESE MATERIALS NEAR A FLAME, SPARKS OR SOURCES OF HEAT. USE PROTECTIVE CLOTHING, GOGGLES AND GLOVES. IF YOU GET ONE OF THESE MATERIALS ON YOUR SKIN OR IN YOUR EYES, FLUSH IT AWAY WITH A FLOW OF CLEAN WATER. IF YOU GET ONE OF THESE MATERIALS IN YOUR MOUTH, GET IMMEDIATE MEDICAL AID. IN GENERAL, THESE MATERIALS ARE POISONOUS, FLAMMABLE AND SKIN IRRITANTS.**

CAUTION: **DO ALL THE WORK ON A CLEAN, SOFT SURFACE TO PREVENT DAMAGE TO THE COMPONENTS.**

CAUTION: **MAKE SURE THAT ALL THE PARTS ARE CLEAN BEFORE YOU ASSEMBLE THEM.**

SUB TASK 25-41-51-400-086-A01

D2549010500000 D2549010500600 D2549010500800 D2549010501200
D2549010501400 D2549010501800 D2549010502200 D2549010502600
D2549010503200 D2549010503600 D2549010503800 D2549010504600
D2549010504800 D2549010505000 D2549010505200 D2549010505400
D2549010505600 D2549010505800 D2549010506000 D2549010506400
D2549010507200 D2549010507600 D2549010507800 D2549010508200
D2549010508400 D2549010508600 D2549010508800 D2549010509200
D2549010509600 D2549010510800 D2549010511000 D2549010511400
D2549010512400 D2549010513400 D2549020500000 D2549020500200
D2549020500400 D2549020500600 D2549020500800 D2549020501000
D2549020501200 D2549020501400 D2549020501800 D2549020502000
D2549020502400 D2549020502600 D2549020502800 D2549020503200
D2549020503600 D2549020504200 D2549020504600 D2549020504800
D2549020505000 D2549020505200 D2549020506000 D2549020506200
D2549020506400 D2549020600000 D2549020600200 D2549020600800
D2549020601000 D2549020601400 D2549020601600 D2549020601800
D2549020602400 D2549020602600 D2549020603400 D2549020603600
D2549020603800 D2549020604000 D2549020604200 D2549020604400
D2549020605200 D2549020605400 D2549020606400 D2549020606600
D2549020607000 D2549020607200 D2549020607400 D2549020607800
D2549020609400 D2549020610400 D2549020611400 D2549020611800
D2549030500400 D2549030500600 D2549030500800 D2549030501000
D2549030501200 D2549030501400 D2549030502000 D2549030502600
D2549030502800 D2549030503000 D2549030503400 D2549030503600
D2549030504000 D2549030504600 D2549030504800 D2549030505200
D2549030505600 D2549030506400 D2549030507000 R225401133-000 R225401137-000 R225401137-002 R225401139-000 R225401145-000 R225401146-000 R225401146-

002 R225401159-000 R225401172-002 R225401188-000 R225401188-002 R225401188-004 R225401188-006

1. Installation of the Rear Wall (05-1)

   (a) Attach the rear wall assembly 05-010 with the screws 05-050, 05-060 and the washers 05-070 to the lavatory structure.

   (b) Install and assemble the toilet switch assembly 05-110 as follows:

      1 Attach the frame 05-113 with the screws 05-120 to the rear wall assembly 05-010.

      2 Attach the front plate 05-115 to the frame 05-113.

SUB TASK 25-41-51-400-086-B01

D2549010500400 D2549010501600 D2549010502800 D2549010503400 D2549010506200 D2549010506800 D2549010507000 D2549010509000 D2549010509400 D2549010509800 D2549010512000 D2549010512200 D2549010513600 D2549020602000 D2549020602800 D2549020605000 D2549020605600 D2549020608400 D2549020609200 D2549030506000 R225401134-000 R225401134-002 R225401136-016 R225401160-002

2. Installation of the Rear Wall (05-1)

   (a) Attach the rear wall assembly 05-010 with the screws 05-050, 05-060 and the washers 05-070 to the lavatory structure.

   (b) Install and assemble the toilet switch assembly 05-110 as follows:

      1 Attach the frame 05-113 and the spacer 05-130 with the screws 05-120 to the rear wall assembly 05-010.

      2 Attach the front plate 05-115 to the frame 05-113.

TASK 25-41-51-400-820-B01
D2549010502400 D2549010504200 D2549010504400 D2549010507400 D2549010508000 D2549010510200 D2549010510400 D2549010511200 D2549010511800 D2549010512600 D2549010513200 D2549010513800 D2549010514200 D2549010601000 D2549010601800 D2549020503800 D2549020504000 D2549020505400 D2549020505800 D2549020600400 D2549020601200 D2549020603000 D2549020603200 D2549020608800 D2549020610800 D2549020611600 D2549020613000 D2549020706400 D2549030501800 D2549030502200 D2549030502400 D2549030503200 D2549030505400 D2549030506600 D2549030509000 R225401107-002 R225401107-004 R225401128-000 R225401175-000

209. Installation of the Rear Wall

A. General

This task gives you the installation and assembly procedures of the component.

B. Procedure

WARNING: BE CAREFUL WHEN YOU USE SOLVENTS/CLEANING AGENTS, SEALANTS AND OTHER MATERIALS. OBEY THE MATERIAL MANUFACTURER'S INSTRUCTIONS AND THE LOCAL REGULATIONS. MAKE SURE THAT THERE IS A GOOD FLOW OF AIR THROUGH THE WORK AREA. DO NOT BREATHE THE FUMES. DO NOT SMOKE. DO NOT USE THESE MATERIALS NEAR A FLAME, SPARKS OR SOURCES OF HEAT. USE PROTECTIVE CLOTHING, GOGGLES AND GLOVES. IF YOU GET ONE OF THESE MATERIALS ON YOUR SKIN OR IN YOUR EYES, FLUSH IT AWAY WITH A FLOW OF CLEAN WATER. IF YOU GET ONE OF THESE MATERIALS IN YOUR MOUTH, GET IMMEDIATE MEDICAL AID. IN GENERAL, THESE MATERIALS ARE POISONOUS, FLAMMABLE AND SKIN IRRITANTS.

CAUTION: DO ALL THE WORK ON A CLEAN, SOFT SURFACE TO PREVENT DAMAGE TO THE COMPONENTS.

CAUTION: MAKE SURE THAT ALL THE PARTS ARE CLEAN BEFORE YOU ASSEMBLE THEM.

SUB TASK 25-41-51-400-087-A01
D2549010508000 D2549010510400 D2549010511800 D2549020504000 D2549020610800 D2549030501800 D2549030502400 D2549030505400 D2549030506600

1. Installation of the Rear Wall (05A-1)

(a) Attach the rear wall assembly 05A-010 with the screws 05A-050, 05A-060 and the washers 05A-070, 05A-190 to the lavatory structure.

(b) Install and assemble the toilet switch assembly 05A-100 as follows:

1 Attach the frame 05A-103 with the screws 05A-110 to the rear wall assembly 05A-010.

2 Attach the front plate 05A-105 to the frame 05A-103.

(c) Install and assemble the plastic cup dispenser 05A-120 as follows:

1 Attach the plastic-cup dispenser holder 05A-140 with the screws 05A-170 and the washers 05A-180 to the rear wall assembly 05A-010.

2 Attach the tube 05A-160 to the plastic-cup dispenser holder 05A-140.

3 Attach the plastic-cup dispenser cover 05A-130 with the retaining washers 05A-150 to the plastic-cup dispenser holder 05A-140.

SUB TASK 25-41-51-400-087-B01
D2549010502400 D2549010513800 D2549020600400 D2549020603000 R225401128-000 R225401175-000

2. Installation of the Rear Wall (05A-1)

(a) Attach the rear wall assembly 05A-010 with the screws 05A-050, 05A-060 and the washers 05A-070, 05A-190 to the lavatory structure.

(b) Install and assemble the toilet switch assembly 05A-100 as follows:

1 Attach the frame 05A-103 and the spacer 05A-115 with the screws 05A-110 to the rear wall assembly 05A-010.

2 Attach the front plate 05A-105 to the frame 05A-103.

(c) Install and assemble the plastic cup dispenser 05A-120 as follows:

1 Attach the plastic-cup dispenser holder 05A-140 with the screws 05A-170 and the washers 05A-180 to the rear wall assembly 05A-010.

2 Attach the tube 05A-160 to the plastic-cup dispenser holder 05A-140.

3 Attach the plastic-cup dispenser cover 05A-130 with the retaining washers 05A-150 to the plastic-cup dispenser holder 05A-140.

SUB TASK 25-41-51-400-087-C01
D2549020601200

3. Installation of the Rear Wall (05A-1)

(a) Attach the rear wall assembly 05A-010 with the screws 05A-050, 05A-060 and the washers 05A-070, 05A-190 to the lavatory structure.

(b) Attach the sheet 05A-260 with the screws 05A-050, 05A-250 and the washers 05A-240 to the rear wall assembly 05A-010.

(c) Install and assemble the toilet switch assembly 05A-100 as follows:

1 Attach the frame 05A-103 with the screws 05A-110 to the rear wall assembly 05A-010.

2 Attach the front plate 05A-105 to the frame 05A-103.

(d) Install and assemble the plastic cup dispenser 05A-120 as follows:

1 Attach the plastic-cup dispenser holder 05A-140 with the screws 05A-170 and the washers 05A-180 to the rear wall assembly 05A-010.

2 Attach the tube 05A-160 to the plastic-cup dispenser holder 05A-140.

3 Attach the plastic-cup dispenser cover 05A-130 with the retaining washers 05A-150 to the plastic-cup dispenser holder 05A-140.

SUB TASK 25-41-51-400-087-D01
D2549010504200 D2549010504400 D2549010507400 D2549010513200 D2549010514200 D2549010601000 D2549020603200 D2549020608800 D2549020611600 D2549020613000 D2549020706400

4. Installation of the Rear Wall (05A-1)

(a) Attach the rear wall assembly 05A-010 with the screws 05A-050, 05A-060 and the washers 05A-070, 05A-190 to the lavatory structure.

(b) Attach the sheet 05A-260 with the screws 05A-050, 05A-250 and the washers 05A-240 to the rear wall assembly 05A-010.

(c) Install and assemble the toilet switch assembly 05A-100 as follows:

1 Attach the frame 05A-103 and the spacer 05A-115 with the screws 05A-110 to the rear wall assembly 05A-010.

2 Attach the front plate 05A-105 to the frame 05A-103.

SUB TASK 25-41-51-400-087-E01
D2549010510200 D2549010511200 D2549010512600 D2549010601800 D2549020503800 D2549020505400 D2549020505800 D2549030502200 D2549030503200 D2549030509000 R225401107-002 R225401107-004

5. Installation of the Rear Wall (05A-1)

(a) Attach the rear wall assembly 05A-010 with the screws 05A-050, 05A-060 and the washers 05A-070, 05A-190 to the lavatory structure.

(b) Attach the angle 05A-270 with the screws 05A-280, 05A-300 and the washers 05A-290 to the rear wall assembly 05A-010.

(c) Attach the sheet 05A-260 with the screws 05A-050, 05A-250 and the washers 05A-240 to the rear wall assembly 05A-010.

(d) Install and assemble the toilet switch assembly 05A-100 as follows:

1 Attach the frame 05A-103 with the screws 05A-110 to the rear wall assembly 05A-010.

2 Attach the front plate 05A-105 to the frame 05A-103.

TASK 25-41-51-400-820-C01

D2549010501000 D2549010502000 D2549010510000 D2549010510600 D2549010511600
D2549010513000 D2549010514000 D2549010514400 D2549010514600 D2549010514800
D2549010600000 D2549010600400 D2549010600600 D2549010600800 D2549010601400
D2549010601600 D2549010602000 D2549010602200 D2549010602400 D2549010602600
D2549010602800 D2549010603000 D2549010603400 D2549010603600 D2549010603800
D2549010604000 D2549010604200 D2549010604400 D2549010604600 D2549010605000
D2549010605200 D2549010605600 D2549010605800 D2549010606200 D2549010606600
D2549010607200 D2549010608200 D2549010608400 D2549020501600 D2549020502200
D2549020503000 D2549020503400 D2549020504400 D2549020505600 D2549020506600
D2549020506800 D2549020507000 D2549020507200 D2549020507400 D2549020507600
D2549020507800 D2549020508000 D2549020508200 D2549020508600 D2549020508800
D2549020509200 D2549020509800 D2549020510000 D2549020511000 D2549020512000
D2549020512200 D2549020512600 D2549020512800 D2549020514000 D2549020514200
D2549020514400 D2549020514600 D2549020602200 D2549020604600 D2549020604800
D2549020605800 D2549020606000 D2549020606800 D2549020607600 D2549020608600
D2549020609000 D2549020609600 D2549020609800 D2549020610000 D2549020610200
D2549020610600 D2549020611000 D2549020611200 D2549020612000 D2549020612400
D2549020612600 D2549020612800 D2549020613200 D2549020613600 D2549020613800
D2549020614000 D2549020614400 D2549020614600 D2549020700200 D2549020700400
D2549020700600 D2549020700800 D2549020701000 D2549020701200 D2549020701400
D2549020701600 D2549020701800 D2549020702200 D2549020702400 D2549020702600
D2549020702800 D2549020703200 D2549020703400 D2549020703600 D2549020703800
D2549020704000 D2549020704200 D2549020704400 D2549020704600 D2549020704800
D2549020705000 D2549020705200 D2549020706000 D2549020706200 D2549020706600
D2549020706800 D2549020707000 D2549020707200 D2549020707800 D2549020708200
D2549020708400 D2549020708600 D2549020708800 D2549020709000 D2549020709600
D2549020709800 D2549020710200 D2549020710400 D2549020710600 D2549020710800
D2549020711000 D2549020711200 D2549020711400 D2549020712200 D2549020712400
D2549020712800 D2549020713200 D2549020713400 D2549020713600 D2549020713800
D2549020714600 D2549030500200 D2549030501600 D2549030503800 D2549030504200
D2549030505800 D2549030506200 D2549030506800 D2549030507200 D2549030507400
D2549030507800 D2549030508000 D2549030508200 D2549030508400 D2549030508600
D2549030508800 D2549030509200 D2549030509600 D2549030509800 D2549030510000
D2549030510200 D2549030510400 D2549030510600 D2549030510800 D2549030511000
D2549030511200 D2549030511400 D2549030511600 D2549030512000 D2549030512200
D2549030512400 D2549030512800 D2549030513000 D2549030513400 D2549030513600
D2549030514000 D2549030514200 D2549030514400 D2549030514600 D2549030514800
D2549030600000 D2549030600200 D2549030600600 D2549030600800 D2549030601000
D2549030601200 D2549030602000 D2549030602400 D2549030602800 D2549030603400
D2549030603600 D2549030604200 D2549030604600 D2549030604800 D2549030605000
D2549030605200 D2549030605400 D2549030605600 D2549030605800 D2549030606200
D2549030606400 D2549030606600 D2549030606800 D2549030607000 D2549030607600
D2549030608600 D2549030609000 D2549030610200 D2549030610600 D2549030611400
D2549030611800 R225401107-000 R225401115-000 R225401115-002 R225401134-006
R225401134-008 R225401134-010 R225401134-016 R225401134-018 R225401134-020
R225401134-022 R225401134-024 R225401134-026 R225401136-000 R225401136-010

R225401136-020 R225401136-022 R225401137-004 R225401137-006 R225401137-008 R225401137-010 R225401137-012 R225401137-014 R225401142-000 R225401142-002 R225401145-002 R225401145-004 R225401145-006 R225401145-012 R225401152-000 R225401152-002 R225401152-004 R225401152-006 R225401153-000 R225401168-004 R225401168-006 R225401168-016 R225401168-018 R225401172-004 R225401172-006 R225401172-008 R225401172-010 R225401172-012 R225401176-000 R225401192-000 R225401195-000 R225401196-000 R225401196-002 R225401196-004 R225401196-034 R225401196-036 R225401196-046 R225401196-048 R225401196-050 R225401600-000 R225401600-002 R225401605-000 R225401618-000 R225401618-002 R225401619-000 R225401619-002

210. Installation of the Rear Wall

A. General

This task gives you the installation and assembly procedures of the component.

B. Procedure

WARNING: BE CAREFUL WHEN YOU USE SOLVENTS/CLEANING AGENTS, SEALANTS AND OTHER MATERIALS. OBEY THE MATERIAL MANUFACTURER'S INSTRUCTIONS AND THE LOCAL REGULATIONS. MAKE SURE THAT THERE IS A GOOD FLOW OF AIR THROUGH THE WORK AREA. DO NOT BREATHE THE FUMES. DO NOT SMOKE. DO NOT USE THESE MATERIALS NEAR A FLAME, SPARKS OR SOURCES OF HEAT. USE PROTECTIVE CLOTHING, GOGGLES AND GLOVES. IF YOU GET ONE OF THESE MATERIALS ON YOUR SKIN OR IN YOUR EYES, FLUSH IT AWAY WITH A FLOW OF CLEAN WATER. IF YOU GET ONE OF THESE MATERIALS IN YOUR MOUTH, GET IMMEDIATE MEDICAL AID. IN GENERAL, THESE MATERIALS ARE POISONOUS, FLAMMABLE AND SKIN IRRITANTS.

CAUTION: DO ALL THE WORK ON A CLEAN, SOFT SURFACE TO PREVENT DAMAGE TO THE COMPONENTS.

CAUTION: MAKE SURE THAT ALL THE PARTS ARE CLEAN BEFORE YOU ASSEMBLE THEM.

SUB TASK 25-41-51-400-089-A01

D2549010510000 D2549010511600 D2549010513000 D2549020604600 D2549020604800 D2549020605800 D2549020606000 D2549020606800 D2549020607600 D2549020608600 D2549020609000 D2549020609600 D2549020609800 D2549020610600 D2549020611000 D2549020611200 D2549020701200 D2549030505800 D2549030506200 D2549030506800 D2549030507200 R225401137-010 R225401176-000

1. Installation of the Rear Wall (05B-1)

(a) Attach the rear wall assembly 05B-010 with the screws 05B-050, 05B-060 and the washers 05B-070 to the lavatory structure.

(b) Install and assemble the toilet switch assembly 05B-080 as follows:

1 Attach the frame 05B-085 with the screws 05B-110 to the rear wall assembly 05B-010.

2 Attach the front plate 05B-090 to the frame 05B-085.

SUB TASK 25-41-51-400-089-B01

D2549010501000 D2549010502000 D2549010510600 D2549010514000
D2549010514400 D2549010514600 D2549010514800 D2549010600000
D2549010600400 D2549010600600 D2549010600800 D2549010601400
D2549010601600 D2549010602000 D2549010602200 D2549010602400
D2549010602600 D2549010602800 D2549010603000 D2549010603400
D2549010603600 D2549010603800 D2549010604000 D2549010604200
D2549010604400 D2549010604600 D2549010605000 D2549010605200
D2549010605600 D2549010605800 D2549010606200 D2549010606600
D2549010607200 D2549010608200 D2549010608400 D2549020501600
D2549020502200 D2549020503000 D2549020503400 D2549020504400
D2549020505600 D2549020506600 D2549020506800 D2549020507000
D2549020507200 D2549020507400 D2549020507600 D2549020507800
D2549020508000 D2549020508200 D2549020508600 D2549020508800
D2549020509200 D2549020509800 D2549020510000 D2549020511000
D2549020512000 D2549020512200 D2549020512600 D2549020512800
D2549020514000 D2549020514200 D2549020514400 D2549020514600
D2549020602200 D2549020610000 D2549020610200 D2549020612000
D2549020612400 D2549020612600 D2549020612800 D2549020613200
D2549020613600 D2549020613800 D2549020614000 D2549020614400
D2549020614600 D2549020700200 D2549020700400 D2549020700600
D2549020700800 D2549020701000 D2549020701400 D2549020701600
D2549020701800 D2549020702200 D2549020702400 D2549020702600
D2549020702800 D2549020703200 D2549020703400 D2549020703600
D2549020703800 D2549020704000 D2549020704200 D2549020704400
D2549020704600 D2549020704800 D2549020705000 D2549020705200
D2549020706000 D2549020706200 D2549020706600 D2549020706800
D2549020707000 D2549020707200 D2549020707800 D2549020708200
D2549020708400 D2549020708600 D2549020708800 D2549020709000
D2549020709600 D2549020709800 D2549020710200 D2549020710400
D2549020710600 D2549020710800 D2549020711000 D2549020711200
D2549020711400 D2549020712200 D2549020712400 D2549020712800
D2549020713200 D2549020713400 D2549020713600 D2549020713800
D2549020714600 D2549030500200 D2549030501600 D2549030503800
D2549030504200 D2549030507400 D2549030507800 D2549030508000
D2549030508200 D2549030508400 D2549030508600 D2549030508800
D2549030509200 D2549030509600 D2549030509800 D2549030510000

D2549030510200 D2549030510400 D2549030510600 D2549030510800 D2549030511000 D2549030511200 D2549030511400 D2549030511600 D2549030512000 D2549030512200 D2549030512400 D2549030512800 D2549030513000 D2549030513400 D2549030513600 D2549030514000 D2549030514200 D2549030514400 D2549030514600 D2549030514800 D2549030600000 D2549030600200 D2549030600600 D2549030600800 D2549030601000 D2549030601200 D2549030602000 D2549030602400 D2549030602800 D2549030603400 D2549030603600 D2549030604200 D2549030604600 D2549030604800 D2549030605000 D2549030605200 D2549030605400 D2549030605600 D2549030605800 D2549030606200 D2549030606400 D2549030606600 D2549030606800 D2549030607000 D2549030607600 D2549030608600 D2549030609000 D2549030610200 D2549030610600 D2549030611400 D2549030611800 R225401107-000 R225401115-000 R225401115-002 R225401134-006 R225401134-008 R225401134-010 R225401134-016 R225401134-018 R225401134-020 R225401134-022 R225401134-024 R225401134-026 R225401136-000 R225401136-010 R225401136-020 R225401136-022 R225401137-004 R225401137-006 R225401137-008 R225401137-012 R225401137-014 R225401142-000 R225401142-002 R225401145-002 R225401145-004 R225401145-006 R225401145-012 R225401152-000 R225401152-002 R225401152-004 R225401152-006 R225401153-000 R225401168-004 R225401168-006 R225401168-016 R225401168-018 R225401172-004 R225401172-006 R225401172-008 R225401172-010 R225401172-012 R225401192-000 R225401195-000 R225401196-000 R225401196-002 R225401196-004 R225401196-034 R225401196-036 R225401196-046 R225401196-048 R225401196-050 R225401600-000 R225401600-002 R225401605-000 R225401618-000 R225401618-002 R225401619-000 R225401619-002

2. Installation of the Rear Wall (05B-1)

   (a) Attach the rear wall assembly 05B-010 with the screws 05B-050, 05B-060 and the washers 05B-070 to the lavatory structure.

   (b) Install and assemble the toilet switch assembly 05B-080 as follows:

      1 Attach the frame 05B-085 and the spacer 05B-130 with the screws 05B-110 to the rear wall assembly 05B-010.

      2 Attach the front plate 05B-090 to the frame 05B-085.

TASK 25-41-51-400-820-D01

D2547161903000 D2549010606800 D2549010607000 D2549010607400 D2549010607600
D2549010608600 D2549010608800 D2549010609000 D2549010609200 D2549010609600
D2549010609800 D2549010610000 D2549010610400 D2549020509600 D2549020510400
D2549020510800 D2549020511200 D2549020511600 D2549020511800 D2549020512400
D2549020513400 D2549020514800 D2549020608200 D2549020612200 D2549020700000
D2549020705400 D2549020707400 D2549020707600 D2549020708000 D2549020710000
D2549020713000 D2549020800000 D2549020800200 D2549020800400 D2549020800600
D2549020800800 D2549020801000 D2549020801600 D2549020802000 D2549020802200
D2549020802600 D2549020803000 D2549020803200 D2549020803400 D2549020803600
D2549020803800 D2549030400000 D2549030400200 D2549030400400 D2549030403800
D2549030601400 D2549030601600 D2549030602200 D2549030604400 D2549030607800
D2549030608000 D2549030608200 D2549030609200 D2549030609800 D2549030610000
D2549030610400 D2549030611000 D2549030611600 D2549030612000 D2549030612200
D2549030612400 D2549030612800 D2549030613400 D2549030613800 D2549030614800
R225401134-004 R225401134-012 R225401134-028 R225401137-016 R225401145-008
R225401145-014 R225401160-000 R225401168-000 R225401168-002 R225401168-014
R225401168-020 R225401168-022 R225401168-028 R225401172-000 R225401172-014
R225401172-016 R225401172-018 R225401196-006 R225401196-038 R225401196-052
R225401199-004 R225401199-006 R225401600-004 R225401605-002 R225401611-010
R225401613-000 R225401614-000 R225401629-000 R225401629-002 R225401693-000

211. Installation of the Rear Wall

A. General

This task gives you the installation and assembly procedures of the component.

B. Procedure

WARNING: **BE CAREFUL WHEN YOU USE SOLVENTS/CLEANING AGENTS, SEALANTS AND OTHER MATERIALS. OBEY THE MATERIAL MANUFACTURER'S INSTRUCTIONS AND THE LOCAL REGULATIONS. MAKE SURE THAT THERE IS A GOOD FLOW OF AIR THROUGH THE WORK AREA. DO NOT BREATHE THE FUMES. DO NOT SMOKE. DO NOT USE THESE MATERIALS NEAR A FLAME, SPARKS OR SOURCES OF HEAT. USE PROTECTIVE CLOTHING, GOGGLES AND GLOVES. IF YOU GET ONE OF THESE MATERIALS ON YOUR SKIN OR IN YOUR EYES, FLUSH IT AWAY WITH A FLOW OF CLEAN WATER. IF YOU GET ONE OF THESE MATERIALS IN YOUR MOUTH, GET IMMEDIATE MEDICAL AID. IN GENERAL, THESE MATERIALS ARE POISONOUS, FLAMMABLE AND SKIN IRRITANTS.**

CAUTION: **DO ALL THE WORK ON A CLEAN, SOFT SURFACE TO PREVENT DAMAGE TO THE COMPONENTS.**

CAUTION: **MAKE SURE THAT ALL THE PARTS ARE CLEAN BEFORE YOU ASSEMBLE THEM.**

SUB TASK 25-41-51-400-090-A01

D2549010606800 D2549010607000 D2549010607400 D2549010607600 D2549010608600 D2549010608800 D2549010609000 D2549010609200 D2549010609600 D2549010609800 D2549010610000 D2549010610400 D2549020509600 D2549020510400 D2549020510800 D2549020511200 D2549020511600 D2549020511800 D2549020512400 D2549020513400 D2549020514800 D2549020608200 D2549020612200 D2549020700000 D2549020705400 D2549020707400 D2549020707600 D2549020708000 D2549020710000 D2549020713000 D2549020800000 D2549020800200 D2549020800400 D2549020800600 D2549020800800 D2549020801000 D2549020801600 D2549020802000 D2549020802200 D2549020802600 D2549020803000 D2549020803200 D2549020803400 D2549020803600 D2549020803800 D2549030400000 D2549030400200 D2549030400400 D2549030403800 D2549030601400 D2549030601600 D2549030602200 D2549030604400 D2549030607800 D2549030608000 D2549030608200 D2549030609200 D2549030609800 D2549030610000 D2549030610400 D2549030611000 D2549030611600 D2549030612000 D2549030612200 D2549030612400 D2549030612800 D2549030613400 D2549030613800 D2549030614800 R225401134-004 R225401134-012 R225401134-028 R225401137-016 R225401145-008 R225401145-014 R225401160-000 R225401168-000 R225401168-002 R225401168-014 R225401168-020 R225401168-022 R225401168-028 R225401172-000 R225401172-014 R225401172-016 R225401172-018 R225401196-006 R225401196-038 R225401196-052 R225401199-004 R225401199-006 R225401600-004 R225401605-002 R225401611-010 R225401613-000 R225401614-000 R225401629-000 R225401629-002 R225401693-000

1. Installation of the Rear Wall (05C-1)

   (a) Attach the rear wall assembly 05C-010 with the screws 05C-060, 05C-070 and the washers 05C-080 to the lavatory structure.

   (b) Install and assemble the toilet switch assembly 05C-090 as follows:

      1 Attach the frame 05C-095 and the spacer 05C-130 with the screws 05C-120 to the rear wall assembly 05C-010.

      2 Attach the front plate 05C-100 to the frame 05C-095.

SUB TASK 25-41-51-400-090-B01

D2547161903000

2. Installation of the Rear Wall (05C-1)

(a) Attach the rear wall assembly 05C-010 with the screws 05C-060, 05C-070 and the washers 05C-080 to the lavatory structure.

(b) Install and assemble the toilet switch assembly 05C-090 as follows:

1 Attach the frame 05C-095 with the screws 05C-120 to the rear wall assembly 05C-010.

2 Attach the front plate 05C-100 to the frame 05C-095.

TASK 25-41-51-400-820-E01
D2549010600200 D2549010601200 D2549010603200 D2549010604800 D2549010606000 D2549010606400 D2549010607800 D2549010609400 D2549020508400 D2549020509000 D2549020513000 D2549020614800 D2549020702000 D2549020705600 D2549020705800 D2549020709200 D2549020709400 D2549020711600 D2549020714400 D2549020801200 D2549020802800 D2549030507600 D2549030509400 D2549030511800 D2549030513200 D2549030513800 D2549030600400 D2549030601800 D2549030603000 D2549030603800 D2549030607200 D2549030607400 D2549030608800 D2549030611200 D2549030614200 D2549030614400 R225401175-002 R225401183-000 R225401183-002 R225401183-008 R225401603-000 R225401625-000

212. Installation of the Rear Wall

A. General

This task gives you the installation and assembly procedures of the component.

B. Procedure

WARNING: BE CAREFUL WHEN YOU USE SOLVENTS/CLEANING AGENTS, SEALANTS AND OTHER MATERIALS. OBEY THE MATERIAL MANUFACTURER'S INSTRUCTIONS AND THE LOCAL REGULATIONS. MAKE SURE THAT THERE IS A GOOD FLOW OF AIR THROUGH THE WORK AREA. DO NOT BREATHE THE FUMES. DO NOT SMOKE. DO NOT USE THESE MATERIALS NEAR A FLAME, SPARKS OR SOURCES OF HEAT. USE PROTECTIVE CLOTHING, GOGGLES AND GLOVES. IF YOU GET ONE OF THESE MATERIALS ON YOUR SKIN OR IN YOUR EYES, FLUSH IT AWAY WITH A FLOW OF CLEAN WATER. IF YOU GET ONE OF THESE MATERIALS IN YOUR MOUTH, GET IMMEDIATE MEDICAL AID. IN GENERAL, THESE MATERIALS ARE POISONOUS, FLAMMABLE AND SKIN IRRITANTS.

CAUTION: DO ALL THE WORK ON A CLEAN, SOFT SURFACE TO PREVENT DAMAGE TO THE COMPONENTS.

CAUTION: MAKE SURE THAT ALL THE PARTS ARE CLEAN BEFORE YOU ASSEMBLE THEM.

SUB TASK 25-41-51-400-091-A01
D2549020711600

1. Installation of the Rear Wall (05D-1)

(a) Attach the rear wall assembly 05D-010 with the screws 05D-060, 05D-070 and the washers 05D-080 to the lavatory structure.

(b) Install and assemble the toilet switch assembly 05D-090 as follows:

1 Attach the frame 05D-095 and the spacer 05D-130 with the screws 05D-120 to the rear wall assembly 05D-010.

2 Attach the front plate 05D-100 to the frame 05D-095.

SUB TASK 25-41-51-400-091-B01

D2549010600200 D2549010601200 D2549010603200 D2549010604800 D2549010606000 D2549010606400 D2549010607800 D2549010609400 D2549020508400 D2549020509000 D2549020513000 D2549020614800 D2549020702000 D2549020705600 D2549020705800 D2549020709200 D2549020709400 D2549020714400 D2549020801200 D2549020802800 D2549030507600 D2549030509400 D2549030511800 D2549030513200 D2549030513800 D2549030600400 D2549030601800 D2549030603000 D2549030603800 D2549030607200 D2549030607400 D2549030608800 D2549030611200 D2549030614200 D2549030614400 R225401175-002 R225401183-000 R225401183-002 R225401183-008 R225401603-000 R225401625-000

2. Installation of the Rear Wall (05D-1)

(a) Attach the rear wall assembly 05D-010 with the screws 05D-060, 05D-070 and the washers 05D-080 to the lavatory structure.

(b) Install and assemble the toilet switch assembly 05D-090 as follows:

1 Attach the frame 05D-095 and the spacer 05D-130 with the screws 05D-120 to the rear wall assembly 05D-010.

2 Attach the front plate 05D-100 to the frame 05D-095.

(c) Install and assemble the plastic cup dispenser 05D-140 as follows:

1 Attach the plastic-cup dispenser holder 05D-160 with the screws 05D-190 and the washers 05D-200 to the rear wall assembly 05D-010.

2 Attach the tube 05D-180 to the plastic-cup dispenser holder 05D-160.

3 Attach the plastic-cup dispenser cover 05D-150 with the retaining washers 05D-170 to the plastic-cup dispenser holder 05D-160.

TASK 25-41-51-400-820-F01
D2549020712000 D2549020712600

213. Installation of the Rear Wall

A. General

This task gives you the installation and assembly procedures of the component.

B. Procedure

WARNING: BE CAREFUL WHEN YOU USE SOLVENTS/CLEANING AGENTS, SEALANTS AND OTHER MATERIALS. OBEY THE MATERIAL MANUFACTURER'S INSTRUCTIONS AND THE LOCAL REGULATIONS. MAKE SURE THAT THERE IS A GOOD FLOW OF AIR THROUGH THE WORK AREA. DO NOT BREATHE THE FUMES. DO NOT SMOKE. DO NOT USE THESE MATERIALS NEAR A FLAME, SPARKS OR SOURCES OF HEAT. USE PROTECTIVE CLOTHING, GOGGLES AND GLOVES. IF YOU GET ONE OF THESE MATERIALS ON YOUR SKIN OR IN YOUR EYES, FLUSH IT AWAY WITH A FLOW OF CLEAN WATER. IF YOU GET ONE OF THESE MATERIALS IN YOUR MOUTH, GET IMMEDIATE MEDICAL AID. IN GENERAL, THESE MATERIALS ARE POISONOUS, FLAMMABLE AND SKIN IRRITANTS.

CAUTION: DO ALL THE WORK ON A CLEAN, SOFT SURFACE TO PREVENT DAMAGE TO THE COMPONENTS.

CAUTION: MAKE SURE THAT ALL THE PARTS ARE CLEAN BEFORE YOU ASSEMBLE THEM.

SUB TASK 25-41-51-400-092-A01

1. Installation of the Rear Wall (05E-1)

(a) Attach the rear wall assembly 05E-010 with the screws 05E-050, 05E-060 and the washers 05E-070 to the lavatory structure.

(b) Attach the L-angles 05E-110, 05E-120 with the screws 05E-130 and the washers 05E-140 to the rear wall lining panel assembly 05E-100.

(c) Attach the rear wall lining panel assembly 05E-100 and the L-angles 05E-110, 05E-120 with the screws 05E-130 and the washers 05E-140 to the lavatory structure.

(d) Attach the cover assembly 05E-080 with the screws 05E-090 and the washers 05E-150 to the rear wall assembly 05E-010.

TASK 25-41-51-400-820-G01

D2549010402400 D2549010403200 D2549010403400 D2549010404600 D2549010404800 D2549010406400 D2549010610600 D2549020300000 D2549020301600 D2549020302000 D2549020400800 D2549020401400 D2549020403200 D2549020407400 D2549020407600 D2549020408200 D2549020410800 D2549020411800 D2549020412200 D2549020412800 D2549020801800 D2549020806800 D2549020813200 D2549020814800 D2549030402400 D2549030403600 D2549030404400 D2549030404800 D2549030406400 D2549030408000 D2549030408400 D2549030410200 D2549030410400 D2549030411400 D2549030411800 D2549030412400 D2549030412800 D2549030414600 D2549030613200 D2549030701200 D2549030702000 D2549030703200 D2549030703600 D2549030705200 D2549030705600 D2549040501800 D2549040502000 R225401183-004 R225401183-006 R225401627-000 R225401627-002 R225401648-000 R225401648-002 R225401648-004 R225401648-006 R225401648-008 R225401662-000 R225401662-002 R225401675-000 R225401683-000 R225401685-000 R225401685-002 R225401689-004 R225401689-006 R225401803-000 R225401803-002 R225401811-000

214. Installation of the Rear Wall

A. General

This task gives you the installation and assembly procedures of the component.

B. Procedure

WARNING: BE CAREFUL WHEN YOU USE SOLVENTS/CLEANING AGENTS, SEALANTS AND OTHER MATERIALS. OBEY THE MATERIAL MANUFACTURER'S INSTRUCTIONS AND THE LOCAL REGULATIONS. MAKE SURE THAT THERE IS A GOOD FLOW OF AIR THROUGH THE WORK AREA. DO NOT BREATHE THE FUMES. DO NOT SMOKE. DO NOT USE THESE MATERIALS NEAR A FLAME, SPARKS OR SOURCES OF HEAT. USE PROTECTIVE CLOTHING, GOGGLES AND GLOVES. IF YOU GET ONE OF THESE MATERIALS ON YOUR SKIN OR IN YOUR EYES, FLUSH IT AWAY WITH A FLOW OF CLEAN WATER. IF YOU GET ONE OF THESE MATERIALS IN YOUR MOUTH, GET IMMEDIATE MEDICAL AID. IN GENERAL, THESE MATERIALS ARE POISONOUS, FLAMMABLE AND SKIN IRRITANTS.

CAUTION: DO ALL THE WORK ON A CLEAN, SOFT SURFACE TO PREVENT DAMAGE TO THE COMPONENTS.

CAUTION: MAKE SURE THAT ALL THE PARTS ARE CLEAN BEFORE YOU ASSEMBLE THEM.

SUB TASK 25-41-51-400-093-A01

1. Installation of the Rear Wall (05F-1)

(a) Attach the rear wall assembly 05F-010 with the screws 05F-060, 05F-070 and the washers 05F-080 to the lavatory structure.

(b) Install and assemble the toilet switch assembly 05F-090 as follows:

1 Attach the frame 05F-100 and the spacer 05F-140 with the screws 05F-130 to the rear wall assembly 05F-010.

2 Attach the front plate 05F-110 to the frame 05F-100.

(c) Install and assemble the plastic cup dispenser 05F-150 as follows:

1 Attach the plastic-cup dispenser holder 05F-170 with the screws 05F-200 and the washers 05F-210 to the rear wall assembly 05F-010.

2 Attach the tube 05F-190 to the plastic-cup dispenser holder 05F-170.

3 Attach the plastic-cup dispenser cover 05F-160 with the retaining washers 05F-180 to the plastic-cup dispenser holder 05F-170.

TASK 25-41-51-400-820-H01

D2549010400200 D2549010610200 D2549010610800 D2549010611000 D2549010611200 D2549010611600 D2549010611800 D2549010612000 D2549010612200 D2549010612400 D2549010613400 D2549020510600 D2549020513200 D2549020513600 D2549020714000 D2549020801400 D2549020802400 D2549020804000 D2549020804200 D2549020804800 D2549020805000 D2549020805600 D2549020806000 D2549020806200 D2549020806400 D2549020807000 D2549020807400 D2549020807600 D2549020808200 D2549020808400 D2549020808600 D2549020808800 D2549020809000 D2549020809400 D2549020809800 D2549020810000 D2549020810200 D2549020810600 D2549020811400 D2549020811600 D2549020811800 D2549020812000 D2549030400600 D2549030401000 D2549030401200 D2549030401400 D2549030401600 D2549030402000 D2549030402200 D2549030402600 D2549030402800 D2549030403000 D2549030403400 D2549030404200 D2549030405200 D2549030405400 D2549030405600 D2549030407200 D2549030603200 D2549030606000 D2549030608400 D2549030612600 D2549030613600 D2549030614600 R225401134-030 R225401134-032 R225401134-034 R225401145-010 R225401168-008 R225401168-010 R225401168-012 R225401168-024 R225401168-026 R225401192-002 R225401196-008 R225401196-010 R225401196-012 R225401196-040 R225401196-044 R225401196-054 R225401196-056 R225401196-058 R225401199-000 R225401199-002 R225401199-008 R225401609-000 R225401611-008 R225401622-000 R225401622-002 R225401646-000 R225401647-000

215. Installation of the Rear Wall

A. General

This task gives you the installation and assembly procedures of the component.

B. Procedure

WARNING: BE CAREFUL WHEN YOU USE SOLVENTS/CLEANING AGENTS, SEALANTS AND OTHER MATERIALS. OBEY THE MATERIAL MANUFACTURER'S INSTRUCTIONS AND THE LOCAL REGULATIONS. MAKE SURE THAT THERE IS A GOOD FLOW OF AIR THROUGH THE WORK AREA. DO NOT BREATHE THE FUMES. DO NOT SMOKE. DO NOT USE THESE MATERIALS NEAR A FLAME, SPARKS OR SOURCES OF HEAT. USE PROTECTIVE CLOTHING, GOGGLES AND GLOVES. IF YOU GET ONE OF THESE MATERIALS ON YOUR SKIN OR IN YOUR EYES, FLUSH IT AWAY WITH A FLOW OF CLEAN WATER. IF YOU GET ONE OF THESE MATERIALS IN YOUR MOUTH, GET IMMEDIATE MEDICAL AID. IN GENERAL, THESE MATERIALS ARE POISONOUS, FLAMMABLE AND SKIN IRRITANTS.

CAUTION: DO ALL THE WORK ON A CLEAN, SOFT SURFACE TO PREVENT DAMAGE TO THE COMPONENTS.

CAUTION: MAKE SURE THAT ALL THE PARTS ARE CLEAN BEFORE YOU ASSEMBLE THEM.

SUB TASK 25-41-51-400-094-A01

D2549010400200 D2549010610200 D2549010610800 D2549010611000 D2549010611200 D2549010611600 D2549010611800 D2549010612000 D2549010612200 D2549010612400 D2549010613400 D2549020510600 D2549020513200 D2549020513600 D2549020714000 D2549020801400 D2549020802400 D2549020804000 D2549020804200 D2549020804800 D2549020805000 D2549020805600 D2549020806000 D2549020806200 D2549020806400 D2549020807000 D2549020807400 D2549020807600 D2549020808200 D2549020808400 D2549020808600 D2549020808800 D2549020809000 D2549020809400 D2549020809800 D2549020810000 D2549020810200 D2549020810600 D2549020811400 D2549020811600 D2549020811800 D2549020812000 D2549030400600 D2549030401000 D2549030401200 D2549030401400 D2549030401600 D2549030402000 D2549030402200 D2549030402600 D2549030402800 D2549030403000 D2549030403400 D2549030404200 D2549030405200 D2549030405400 D2549030405600 D2549030407200 D2549030603200 D2549030612600 D2549030613600 D2549030614600 R225401134-030 R225401134-032 R225401134-034 R225401145-010 R225401168-008 R225401168-010 R225401168-012 R225401168-024 R225401168-026 R225401192-002 R225401196-008 R225401196-010 R225401196-012 R225401196-040 R225401196-044 R225401196-054 R225401196-056 R225401196-058 R225401199-000 R225401199-008 R225401609-000 R225401622-000 R225401622-002 R225401646-000 R225401647-000

1. Installation of the Rear Wall (05G-1)

   (a) Attach the rear wall assembly 05G-010 with the screws 05G-060, 05G-070 and the washers 05G-080 to the lavatory structure.

   (b) Install and assemble the toilet switch assembly 05G-090 as follows:

      1 Attach the frame 05G-100 and the spacer 05G-140 with the screws 05G-130 to the rear wall assembly 05G-010.

      2 Attach the front plate 05G-110 to the frame 05G-100.

SUB TASK 25-41-51-400-094-B01

D2549030606000 D2549030608400 R225401199-002 R225401611-008

2. Installation of the Rear Wall (05G-1)

   (a) Attach the rear wall assembly 05G-010 with the screws 05G-060, 05G-070 and the washers 05G-080 to the lavatory structure.

   (b) Attach the angles 05G-150, 05G-190 with the screws 05G-160, 05G-180 and the washers 05G-170 to the rear wall assembly 05G-010.

(c) Install and assemble the toilet switch assembly 05G-090 as follows:

1 Attach the frame 05G-100 and the spacer 05G-140 with the screws 05G-130 to the rear wall assembly 05G-010.

2 Attach the front plate 05G-110 to the frame 05G-100.

TASK 25-41-51-400-820-J01

D2549010400000 D2549010400400 D2549010400600 D2549010401000 D2549010401400
D2549010401600 D2549010401800 D2549010402000 D2549010402200 D2549010402800
D2549010403000 D2549010403600 D2549010403800 D2549010404000 D2549010404200
D2549010404400 D2549010405000 D2549010405200 D2549010405400 D2549010405600
D2549010405800 D2549010406000 D2549010406200 D2549010406800 D2549010407000
D2549010611400 D2549010612600 D2549010613000 D2549010613200 D2549010613600
D2549010613800 D2549010614200 D2549010614400 D2549010614600 D2549010614800
D2549020300400 D2549020300600 D2549020301800 D2549020302800 D2549020400000
D2549020400200 D2549020400400 D2549020400600 D2549020401000 D2549020401200
D2549020401600 D2549020402000 D2549020402400 D2549020402600 D2549020403000
D2549020403600 D2549020403800 D2549020404000 D2549020404200 D2549020404400
D2549020404600 D2549020404800 D2549020405000 D2549020405200 D2549020405400
D2549020405600 D2549020405800 D2549020406000 D2549020406200 D2549020406400
D2549020406600 D2549020406800 D2549020407000 D2549020407800 D2549020408000
D2549020408600 D2549020408800 D2549020409000 D2549020409200 D2549020409400
D2549020409800 D2549020410200 D2549020410600 D2549020411000 D2549020411400
D2549020411600 D2549020413000 D2549020413400 D2549020413600 D2549020413800
D2549020414200 D2549020414600 D2549020414800 D2549020513800 D2549020804400
D2549020805200 D2549020805400 D2549020805800 D2549020806600 D2549020807200
D2549020807800 D2549020809600 D2549020810400 D2549020810800 D2549020811200
D2549020812200 D2549020812400 D2549020812600 D2549020812800 D2549020813000
D2549020813400 D2549020813600 D2549020813800 D2549020814000 D2549020814200
D2549020814400 D2549020814600 D2549030401800 D2549030404000 D2549030404600
D2549030405000 D2549030405800 D2549030406000 D2549030406600 D2549030406800
D2549030407000 D2549030407400 D2549030407600 D2549030407800 D2549030408600
D2549030409000 D2549030409200 D2549030409400 D2549030409600 D2549030409800
D2549030410000 D2549030410600 D2549030410800 D2549030411600 D2549030412600
D2549030413000 D2549030413200 D2549030413400 D2549030413600 D2549030414000
D2549030414200 D2549030414400 D2549030414800 D2549030614000 D2549030700000
D2549030700200 D2549030700400 D2549030700600 D2549030700800 D2549030701600
D2549030701800 D2549030702200 D2549030702400 D2549030702600 D2549030702800
D2549030703000 D2549030703800 D2549030704000 D2549030704400 D2549030704600
D2549030704800 D2549040500200 D2549040500400 D2549040500600 D2549040500800
D2549040501000 D2549040501200 D2549040501400 D2549040501600 R225401134-014
R225401134-036 R225401134-038 R225401136-004 R225401136-006 R225401136-008
R225401136-014 R225401136-018 R225401152-008 R225401152-010 R225401196-014
R225401196-016 R225401196-018 R225401196-020 R225401196-022 R225401196-024
R225401196-042 R225401196-060 R225401196-062 R225401196-064 R225401196-066
R225401196-068 R225401196-070 R225401199-010 R225401199-012 R225401602-000
R225401611-000 R225401611-006 R225401611-012 R225401611-014 R225401611-016
R225401611-018 R225401624-000 R225401627-004 R225401639-000 R225401639-002
R225401643-000 R225401643-002 R225401643-004 R225401643-006 R225401643-008
R225401646-002 R225401649-000 R225401656-000 R225401656-002 R225401658-000
R225401671-000 R225401671-002 R225401673-000 R225401673-002 R225401673-004

R225401673-006 R225401676-000 R225401688-000 R225401691-000 R225401691-002
R225401697-000 R225401697-002 R225401808-000 R225401814-000

216. Installation of the Rear Wall

A. General

This task gives you the installation and assembly procedures of the component.

B. Procedure

WARNING: BE CAREFUL WHEN YOU USE SOLVENTS/CLEANING AGENTS, SEALANTS AND OTHER MATERIALS. OBEY THE MATERIAL MANUFACTURER'S INSTRUCTIONS AND THE LOCAL REGULATIONS. MAKE SURE THAT THERE IS A GOOD FLOW OF AIR THROUGH THE WORK AREA. DO NOT BREATHE THE FUMES. DO NOT SMOKE. DO NOT USE THESE MATERIALS NEAR A FLAME, SPARKS OR SOURCES OF HEAT. USE PROTECTIVE CLOTHING, GOGGLES AND GLOVES. IF YOU GET ONE OF THESE MATERIALS ON YOUR SKIN OR IN YOUR EYES, FLUSH IT AWAY WITH A FLOW OF CLEAN WATER. IF YOU GET ONE OF THESE MATERIALS IN YOUR MOUTH, GET IMMEDIATE MEDICAL AID. IN GENERAL, THESE MATERIALS ARE POISONOUS, FLAMMABLE AND SKIN IRRITANTS.

CAUTION: DO ALL THE WORK ON A CLEAN, SOFT SURFACE TO PREVENT DAMAGE TO THE COMPONENTS.

CAUTION: MAKE SURE THAT ALL THE PARTS ARE CLEAN BEFORE YOU ASSEMBLE THEM.

SUB TASK 25-41-51-400-095-A01
D2549010400000 D2549010400400 D2549010400600 D2549010401000
D2549010401400 D2549010401600 D2549010401800 D2549010402000
D2549010402200 D2549010402800 D2549010403000 D2549010403600
D2549010403800 D2549010404000 D2549010404200 D2549010404400
D2549010405000 D2549010405200 D2549010405400 D2549010405600
D2549010405800 D2549010406000 D2549010406200 D2549010406800
D2549010407000 D2549010611400 D2549010612600 D2549010613000
D2549010613200 D2549010613600 D2549010613800 D2549010614200
D2549010614400 D2549010614600 D2549010614800 D2549020300400
D2549020300600 D2549020301800 D2549020302800 D2549020400000
D2549020400200 D2549020400400 D2549020400600 D2549020401000
D2549020401200 D2549020401600 D2549020402000 D2549020402400
D2549020402600 D2549020403000 D2549020403600 D2549020403800
D2549020404000 D2549020404200 D2549020404400 D2549020404600
D2549020404800 D2549020405000 D2549020405200 D2549020405400
D2549020405600 D2549020405800 D2549020406000 D2549020406200

D2549020406400 D2549020406600 D2549020406800 D2549020407000 D2549020407800 D2549020408000 D2549020408600 D2549020408800 D2549020409000 D2549020409200 D2549020409400 D2549020409800 D2549020410200 D2549020410600 D2549020411000 D2549020411400 D2549020411600 D2549020413000 D2549020413400 D2549020413600 D2549020413800 D2549020414200 D2549020414600 D2549020414800 D2549020513800 D2549020804400 D2549020805200 D2549020805400 D2549020805800 D2549020806600 D2549020807200 D2549020807800 D2549020809600 D2549020810400 D2549020810800 D2549020811200 D2549020812200 D2549020812400 D2549020812600 D2549020812800 D2549020813000 D2549020813400 D2549020813600 D2549020813800 D2549020814000 D2549020814200 D2549020814400 D2549020814600 D2549030401800 D2549030404000 D2549030404600 D2549030405000 D2549030405800 D2549030406000 D2549030406600 D2549030406800 D2549030407000 D2549030407400 D2549030407600 D2549030407800 D2549030408600 D2549030409000 D2549030409200 D2549030409400 D2549030409600 D2549030409800 D2549030410000 D2549030410600 D2549030410800 D2549030411600 D2549030412600 D2549030413000 D2549030413200 D2549030413400 D2549030413600 D2549030414000 D2549030414200 D2549030414400 D2549030414800 D2549030614000 D2549030700000 D2549030700200 D2549030700400 D2549030700600 D2549030700800 D2549030701600 D2549030701800 D2549030702200 D2549030702400 D2549030702600 D2549030702800 D2549030703000 D2549030703800 D2549030704000 D2549030704400 D2549030704600 D2549030704800 D2549040500200 D2549040500400 D2549040500600 D2549040500800 D2549040501000 D2549040501200 D2549040501400 D2549040501600 R225401134-014 R225401134-036 R225401134-038 R225401136-004 R225401136-006 R225401136-008 R225401136-014 R225401136-018 R225401196-042 R225401199-010 R225401199-012 R225401602-000 R225401611-012 R225401611-014 R225401611-016 R225401611-018 R225401624-000 R225401627-004 R225401643-002 R225401643-004 R225401643-006 R225401643-008 R225401646-002 R225401649-000 R225401656-000 R225401656-002 R225401658-000 R225401671-000 R225401671-002 R225401673-000 R225401673-002 R225401673-004 R225401673-006 R225401691-000 R225401691-002 R225401697-002 R225401808-000 R225401814-000

1. Installation of the Rear Wall (05H-1)

   (a) Attach the rear wall assembly 05H-010 with the screws 05H-060, 05H-070 and the washers 05H-080 to the lavatory structure.

   (b) Install and assemble the toilet switch assembly 05H-090 as follows:

      1 Attach the frame 05H-100 and the spacer 05H-140 with the screws 05H-130 to the rear wall assembly 05H-010.

      2 Attach the front plate 05H-110 to the frame 05H-100.

TASK 25-41-51-400-820-K01
D2547160900200 D2547160900400 D2549010400800 D2549010402600 D2549020300800 D2549020301000 D2549020402200 D2549020403400 D2549020407200 D2549020409600 D2549020410400 D2549020411200 D2549020412000 D2549020412400 D2549020412600 D2549020413200 D2549020414000 D2549030408200 D2549030411200 D2549030412000 D2549030412200 D2549030701000 D2549030701400 D2549030703400 D2549030704200 R225401136-012 R225401136-024 R225401611-020

217. Installation of the Rear Wall

A. General

This task gives you the installation and assembly procedures of the component.

B. Procedure

WARNING: BE CAREFUL WHEN YOU USE SOLVENTS/CLEANING AGENTS, SEALANTS AND OTHER MATERIALS. OBEY THE MATERIAL MANUFACTURER'S INSTRUCTIONS AND THE LOCAL REGULATIONS. MAKE SURE THAT THERE IS A GOOD FLOW OF AIR THROUGH THE WORK AREA. DO NOT BREATHE THE FUMES. DO NOT SMOKE. DO NOT USE THESE MATERIALS NEAR A FLAME, SPARKS OR SOURCES OF HEAT. USE PROTECTIVE CLOTHING, GOGGLES AND GLOVES. IF YOU GET ONE OF THESE MATERIALS ON YOUR SKIN OR IN YOUR EYES, FLUSH IT AWAY WITH A FLOW OF CLEAN WATER. IF YOU GET ONE OF THESE MATERIALS IN YOUR MOUTH, GET IMMEDIATE MEDICAL AID. IN GENERAL, THESE MATERIALS ARE POISONOUS, FLAMMABLE AND SKIN IRRITANTS.

CAUTION: DO ALL THE WORK ON A CLEAN, SOFT SURFACE TO PREVENT DAMAGE TO THE COMPONENTS.

CAUTION: MAKE SURE THAT ALL THE PARTS ARE CLEAN BEFORE YOU ASSEMBLE THEM.

SUB TASK 25-41-51-400-096-A01
D2547160900200 D2547160900400 D2549010400800 D2549010402600 D2549020300800 D2549020301000 D2549020402200 D2549020403400 D2549020407200 D2549020409600 D2549020410400 D2549020411200 D2549020412000 D2549020412400 D2549020412600 D2549020413200 D2549020414000 D2549030408200 D2549030411200 D2549030412000 D2549030412200 D2549030701000 D2549030701400 D2549030703400 D2549030704200 R225401136-012 R225401136-024 R225401611-020

1. Installation of the Rear Wall (05J-1)

(a) Attach the rear wall assembly 05J-010 with the screws 05J-060, 05J-070 and the washers 05J-080 to the lavatory structure.

(b) Install and assemble the toilet switch assembly 05J-090 as follows:

1 Attach the frame 05J-100 and the spacer 05J-140 with the screws 05J-130 to the rear wall assembly 05J-010.

2 Attach the front plate 05J-110 to the frame 05J-100.

TASK 25-41-51-400-820-L01
D2549030602600

218. Installation of the Rear Wall

A. General

- Not applicable

B. Procedure

SUB TASK 25-41-51-400-097-A01
D2549030602600

1. Installation of the Rear Wall

(a) Not applicable.

TASK 25-41-51-400-821-A01

D2547160900200 D2547160900400 D2547161903000 D2549010400000 D2549010400200
D2549010400400 D2549010400600 D2549010400800 D2549010401000 D2549010401400
D2549010402000 D2549010402200 D2549010402400 D2549010402600 D2549010402800
D2549010403000 D2549010403200 D2549010403400 D2549010403600 D2549010403800
D2549010404000 D2549010404200 D2549010404400 D2549010404600 D2549010404800
D2549010405000 D2549010405400 D2549010405800 D2549010406000 D2549010406200
D2549010406400 D2549010406800 D2549010407000 D2549010500000 D2549010500400
D2549010500600 D2549010500800 D2549010501000 D2549010501200 D2549010501400
D2549010501600 D2549010501800 D2549010502000 D2549010502200 D2549010502400
D2549010502600 D2549010502800 D2549010503200 D2549010503400 D2549010503600
D2549010503800 D2549010504200 D2549010504400 D2549010504600 D2549010504800
D2549010505000 D2549010505200 D2549010505400 D2549010505600 D2549010505800
D2549010506000 D2549010506200 D2549010506400 D2549010506800 D2549010507000
D2549010507200 D2549010507400 D2549010507600 D2549010507800 D2549010508000
D2549010508200 D2549010508400 D2549010508600 D2549010508800 D2549010509000
D2549010509200 D2549010509400 D2549010509600 D2549010509800 D2549010510000
D2549010510200 D2549010510400 D2549010510600 D2549010510800 D2549010511000
D2549010511200 D2549010511400 D2549010511600 D2549010511800 D2549010512000
D2549010512200 D2549010512400 D2549010512600 D2549010513000 D2549010513200
D2549010513400 D2549010513600 D2549010513800 D2549010514000 D2549010514200
D2549010514400 D2549010514600 D2549010514800 D2549010600000 D2549010600200
D2549010600400 D2549010600600 D2549010600800 D2549010601000 D2549010601200
D2549010601400 D2549010601600 D2549010601800 D2549010602000 D2549010602200
D2549010602400 D2549010602600 D2549010602800 D2549010603000 D2549010603200
D2549010603400 D2549010603600 D2549010603800 D2549010604000 D2549010604200
D2549010604400 D2549010604600 D2549010604800 D2549010605000 D2549010605200
D2549010605600 D2549010605800 D2549010606000 D2549010606200 D2549010606400
D2549010606600 D2549010606800 D2549010607000 D2549010607200 D2549010607400
D2549010607600 D2549010607800 D2549010608200 D2549010608400 D2549010608600
D2549010608800 D2549010609000 D2549010609200 D2549010609400 D2549010609600
D2549010609800 D2549010610000 D2549010610200 D2549010610400 D2549010610600
D2549010610800 D2549010611000 D2549010611200 D2549010611600 D2549010611800
D2549010612000 D2549010612200 D2549010612400 D2549010612600 D2549010613000
D2549010613200 D2549010613400 D2549010613600 D2549010613800 D2549010614200
D2549010614400 D2549010614600 D2549010614800 D2549020300400 D2549020300600
D2549020300800 D2549020301000 D2549020301800 D2549020302000 D2549020302800
D2549020400000 D2549020400200 D2549020400400 D2549020400600 D2549020400800
D2549020401000 D2549020401200 D2549020401400 D2549020401600 D2549020402000
D2549020402200 D2549020402400 D2549020402600 D2549020403200 D2549020403400
D2549020403600 D2549020403800 D2549020404000 D2549020404200 D2549020404400
D2549020404600 D2549020404800 D2549020405000 D2549020405200 D2549020405400
D2549020405600 D2549020405800 D2549020406000 D2549020406200 D2549020406400
D2549020406600 D2549020406800 D2549020407000 D2549020407200 D2549020407400
D2549020407600 D2549020407800 D2549020408000 D2549020408200 D2549020408600
D2549020408800 D2549020409000 D2549020409200 D2549020409400 D2549020409600
D2549020409800 D2549020410200 D2549020410400 D2549020410600 D2549020410800

D2549020411000 D2549020411400 D2549020411600 D2549020412600 D2549020412800
D2549020413000 D2549020413400 D2549020414200 D2549020500000 D2549020500200
D2549020500400 D2549020500600 D2549020500800 D2549020501000 D2549020501200
D2549020501400 D2549020501600 D2549020501800 D2549020502000 D2549020502200
D2549020502400 D2549020502600 D2549020502800 D2549020503000 D2549020503200
D2549020503400 D2549020503600 D2549020503800 D2549020504000 D2549020504200
D2549020504400 D2549020504600 D2549020504800 D2549020505000 D2549020505200
D2549020505400 D2549020505600 D2549020505800 D2549020506000 D2549020506200
D2549020506400 D2549020506600 D2549020506800 D2549020507000 D2549020507200
D2549020507400 D2549020507600 D2549020507800 D2549020508000 D2549020508200
D2549020508400 D2549020508600 D2549020508800 D2549020509000 D2549020509200
D2549020509600 D2549020509800 D2549020510000 D2549020510400 D2549020510600
D2549020510800 D2549020511000 D2549020511200 D2549020511600 D2549020511800
D2549020512000 D2549020512200 D2549020512400 D2549020512600 D2549020512800
D2549020513000 D2549020513200 D2549020513400 D2549020513600 D2549020513800
D2549020514000 D2549020514200 D2549020514400 D2549020514600 D2549020514800
D2549020600000 D2549020600200 D2549020600400 D2549020600800 D2549020601000
D2549020601200 D2549020601400 D2549020601600 D2549020601800 D2549020602000
D2549020602200 D2549020602400 D2549020602600 D2549020602800 D2549020603000
D2549020603200 D2549020603400 D2549020603600 D2549020603800 D2549020604000
D2549020604200 D2549020604400 D2549020604600 D2549020604800 D2549020605000
D2549020605200 D2549020605400 D2549020605600 D2549020605800 D2549020606000
D2549020606400 D2549020606600 D2549020606800 D2549020607000 D2549020607200
D2549020607400 D2549020607600 D2549020607800 D2549020608200 D2549020608400
D2549020608600 D2549020608800 D2549020609000 D2549020609200 D2549020609400
D2549020609600 D2549020609800 D2549020610000 D2549020610200 D2549020610400
D2549020610600 D2549020610800 D2549020611000 D2549020611200 D2549020611400
D2549020611600 D2549020611800 D2549020612000 D2549020612200 D2549020612400
D2549020612600 D2549020612800 D2549020613000 D2549020613200 D2549020613600
D2549020613800 D2549020614000 D2549020614400 D2549020614600 D2549020614800
D2549020700000 D2549020700200 D2549020700400 D2549020700600 D2549020700800
D2549020701000 D2549020701200 D2549020701400 D2549020701600 D2549020701800
D2549020702000 D2549020702200 D2549020702400 D2549020702600 D2549020702800
D2549020703200 D2549020703400 D2549020703600 D2549020703800 D2549020704000
D2549020704200 D2549020704400 D2549020704600 D2549020704800 D2549020705000
D2549020705200 D2549020705400 D2549020705600 D2549020705800 D2549020706000
D2549020706200 D2549020706400 D2549020706600 D2549020706800 D2549020707000
D2549020707200 D2549020707400 D2549020707600 D2549020707800 D2549020708000
D2549020708200 D2549020708400 D2549020708600 D2549020708800 D2549020709000
D2549020709200 D2549020709400 D2549020709600 D2549020709800 D2549020710000
D2549020710200 D2549020710400 D2549020710600 D2549020710800 D2549020711000
D2549020711200 D2549020711400 D2549020711600 D2549020712000 D2549020712200
D2549020712400 D2549020712600 D2549020712800 D2549020713000 D2549020713200
D2549020713400 D2549020713600 D2549020713800 D2549020714000 D2549020714400
D2549020714600 D2549020800000 D2549020800200 D2549020800400 D2549020800600
D2549020800800 D2549020801000 D2549020801200 D2549020801400 D2549020801600
D2549020801800 D2549020802000 D2549020802200 D2549020802400 D2549020802600

D2549020802800 D2549020803000 D2549020803200 D2549020803400 D2549020803600
D2549020803800 D2549020804000 D2549020804200 D2549020804400 D2549020804800
D2549020805000 D2549020805400 D2549020805600 D2549020805800 D2549020806000
D2549020806200 D2549020806400 D2549020806600 D2549020806800 D2549020807000
D2549020807200 D2549020807600 D2549020807800 D2549020808200 D2549020808400
D2549020808600 D2549020808800 D2549020809000 D2549020809400 D2549020809600
D2549020809800 D2549020810000 D2549020810200 D2549020810400 D2549020810600
D2549020810800 D2549020811200 D2549020811400 D2549020811600 D2549020811800
D2549020812000 D2549020812200 D2549020812400 D2549020812600 D2549020812800
D2549020813000 D2549020813200 D2549020813400 D2549020813600 D2549020813800
D2549020814000 D2549020814200 D2549020814400 D2549020814600 D2549020814800
D2549030400000 D2549030400200 D2549030400400 D2549030400600 D2549030401000
D2549030401200 D2549030401400 D2549030401600 D2549030401800 D2549030402600
D2549030402800 D2549030403000 D2549030403400 D2549030403600 D2549030403800
D2549030404000 D2549030404200 D2549030404400 D2549030404600 D2549030404800
D2549030405000 D2549030405600 D2549030405800 D2549030406000 D2549030406400
D2549030406600 D2549030406800 D2549030407000 D2549030407400 D2549030407600
D2549030407800 D2549030408000 D2549030408400 D2549030409200 D2549030409800
D2549030410000 D2549030410400 D2549030411200 D2549030411400 D2549030411600
D2549030411800 D2549030412000 D2549030412400 D2549030412600 D2549030412800
D2549030413200 D2549030413600 D2549030414400 D2549030414800 D2549030500200
D2549030500400 D2549030500600 D2549030500800 D2549030501000 D2549030501200
D2549030501400 D2549030501600 D2549030501800 D2549030502000 D2549030502200
D2549030502400 D2549030502600 D2549030502800 D2549030503000 D2549030503200
D2549030503400 D2549030503600 D2549030503800 D2549030504000 D2549030504200
D2549030504600 D2549030504800 D2549030505200 D2549030505400 D2549030505600
D2549030505800 D2549030506000 D2549030506200 D2549030506400 D2549030506600
D2549030506800 D2549030507000 D2549030507200 D2549030507400 D2549030507600
D2549030507800 D2549030508000 D2549030508200 D2549030508400 D2549030508600
D2549030508800 D2549030509000 D2549030509200 D2549030509400 D2549030509600
D2549030509800 D2549030510000 D2549030510200 D2549030510400 D2549030510600
D2549030510800 D2549030511000 D2549030511200 D2549030511400 D2549030511600
D2549030511800 D2549030512000 D2549030512200 D2549030512400 D2549030512800
D2549030513000 D2549030513200 D2549030513400 D2549030513600 D2549030513800
D2549030514000 D2549030514200 D2549030514400 D2549030514600 D2549030514800
D2549030600000 D2549030600200 D2549030600400 D2549030600600 D2549030600800
D2549030601000 D2549030601200 D2549030601400 D2549030601600 D2549030601800
D2549030602000 D2549030602200 D2549030602400 D2549030602600 D2549030602800
D2549030603000 D2549030603200 D2549030603400 D2549030603600 D2549030603800
D2549030604200 D2549030604400 D2549030604600 D2549030604800 D2549030605000
D2549030605200 D2549030605400 D2549030605600 D2549030605800 D2549030606000
D2549030606200 D2549030606400 D2549030606600 D2549030606800 D2549030607000
D2549030607200 D2549030607400 D2549030607600 D2549030607800 D2549030608000
D2549030608200 D2549030608400 D2549030608600 D2549030608800 D2549030609000
D2549030609200 D2549030609800 D2549030610000 D2549030610200 D2549030610400
D2549030610600 D2549030611000 D2549030611200 D2549030611400 D2549030611600
D2549030611800 D2549030612000 D2549030612200 D2549030612400 D2549030612600

D2549030612800 D2549030613200 D2549030613400 D2549030613600 D2549030613800
D2549030614000 D2549030614200 D2549030614400 D2549030614600 D2549030614800
D2549030700200 D2549030700400 D2549030701000 D2549030701200 D2549030702600
D2549030703400 D2549030703600 D2549030705200 D2549040500200 R225401107-000
R225401107-002 R225401107-004 R225401115-000 R225401115-002 R225401128-000
R225401133-000 R225401134-000 R225401134-002 R225401134-004 R225401134-006
R225401134-008 R225401134-010 R225401134-012 R225401134-016 R225401134-018
R225401134-020 R225401134-022 R225401134-024 R225401134-026 R225401134-028
R225401134-030 R225401134-036 R225401136-000 R225401136-004 R225401136-006
R225401136-010 R225401136-012 R225401136-016 R225401136-018 R225401136-020
R225401136-022 R225401136-024 R225401137-000 R225401137-002 R225401137-004
R225401137-006 R225401137-008 R225401137-010 R225401137-012 R225401137-014
R225401137-016 R225401139-000 R225401142-000 R225401142-002 R225401145-000
R225401145-002 R225401145-004 R225401145-006 R225401145-008 R225401145-010
R225401145-012 R225401145-014 R225401146-000 R225401146-002 R225401152-000
R225401152-002 R225401152-004 R225401152-006 R225401152-008 R225401152-010
R225401153-000 R225401159-000 R225401160-000 R225401160-002 R225401168-000
R225401168-002 R225401168-004 R225401168-006 R225401168-008 R225401168-014
R225401168-016 R225401168-018 R225401168-020 R225401168-022 R225401168-024
R225401168-028 R225401172-000 R225401172-002 R225401172-004 R225401172-006
R225401172-008 R225401172-010 R225401172-012 R225401172-014 R225401172-016
R225401172-018 R225401175-000 R225401175-002 R225401176-000 R225401183-000
R225401183-002 R225401183-004 R225401183-006 R225401183-008 R225401188-000
R225401188-002 R225401188-004 R225401188-006 R225401192-000 R225401192-002
R225401195-000 R225401196-000 R225401196-002 R225401196-004 R225401196-006
R225401196-008 R225401196-010 R225401196-012 R225401196-014 R225401196-016
R225401196-018 R225401196-020 R225401196-022 R225401196-024 R225401196-034
R225401196-036 R225401196-038 R225401196-040 R225401196-042 R225401196-044
R225401196-046 R225401196-048 R225401196-050 R225401196-052 R225401196-054
R225401196-056 R225401196-058 R225401196-060 R225401196-062 R225401196-064
R225401196-066 R225401196-068 R225401196-070 R225401199-000 R225401199-002
R225401199-004 R225401199-006 R225401199-008 R225401199-010 R225401199-012
R225401600-000 R225401600-002 R225401600-004 R225401602-000 R225401603-000
R225401605-000 R225401605-002 R225401609-000 R225401611-000 R225401611-006
R225401611-008 R225401611-010 R225401611-012 R225401611-014 R225401611-016
R225401611-018 R225401613-000 R225401614-000 R225401618-000 R225401618-002
R225401619-000 R225401619-002 R225401622-000 R225401622-002 R225401624-000
R225401625-000 R225401627-000 R225401627-002 R225401627-004 R225401629-000
R225401629-002 R225401639-000 R225401639-002 R225401643-000 R225401643-002
R225401643-004 R225401643-006 R225401643-008 R225401646-000 R225401646-002
R225401647-000 R225401648-000 R225401648-002 R225401648-004 R225401648-006
R225401648-008 R225401649-000 R225401656-000 R225401656-002 R225401658-000
R225401662-000 R225401662-002 R225401676-000 R225401683-000 R225401685-000

R225401685-002 R225401688-000 R225401689-004 R225401689-006 R225401693-000 R225401811-000

219. Installation of the Ceiling Panel

A. General

This task gives you the installation and assembly procedures of the component.

B. Procedure

WARNING: BE CAREFUL WHEN YOU USE SOLVENTS/CLEANING AGENTS, SEALANTS AND OTHER MATERIALS. OBEY THE MATERIAL MANUFACTURER'S INSTRUCTIONS AND THE LOCAL REGULATIONS. MAKE SURE THAT THERE IS A GOOD FLOW OF AIR THROUGH THE WORK AREA. DO NOT BREATHE THE FUMES. DO NOT SMOKE. DO NOT USE THESE MATERIALS NEAR A FLAME, SPARKS OR SOURCES OF HEAT. USE PROTECTIVE CLOTHING, GOGGLES AND GLOVES. IF YOU GET ONE OF THESE MATERIALS ON YOUR SKIN OR IN YOUR EYES, FLUSH IT AWAY WITH A FLOW OF CLEAN WATER. IF YOU GET ONE OF THESE MATERIALS IN YOUR MOUTH, GET IMMEDIATE MEDICAL AID. IN GENERAL, THESE MATERIALS ARE POISONOUS, FLAMMABLE AND SKIN IRRITANTS.

CAUTION: DO ALL THE WORK ON A CLEAN, SOFT SURFACE TO PREVENT DAMAGE TO THE COMPONENTS.

CAUTION: MAKE SURE THAT ALL THE PARTS ARE CLEAN BEFORE YOU ASSEMBLE THEM.

SUB TASK 25-41-51-400-064-A01

D2547160900200 D2547160900400 D2547161903000 D2549010400000
D2549010400200 D2549010400400 D2549010400600 D2549010400800
D2549010401000 D2549010401400 D2549010402000 D2549010402200
D2549010402400 D2549010402600 D2549010402800 D2549010403000
D2549010403200 D2549010403400 D2549010403600 D2549010403800
D2549010404000 D2549010404200 D2549010404400 D2549010404600
D2549010404800 D2549010405000 D2549010405400 D2549010405800
D2549010406000 D2549010406200 D2549010406400 D2549010406800
D2549010407000 D2549010500000 D2549010500400 D2549010500600
D2549010500800 D2549010501000 D2549010501200 D2549010501400
D2549010501600 D2549010501800 D2549010502000 D2549010502200
D2549010502400 D2549010502600 D2549010502800 D2549010503200
D2549010503400 D2549010503600 D2549010503800 D2549010504200
D2549010504400 D2549010504600 D2549010504800 D2549010505000
D2549010505200 D2549010505400 D2549010505600 D2549010505800
D2549010506000 D2549010506200 D2549010506400 D2549010506800

D2549010507000 D2549010507200 D2549010507400 D2549010507600
D2549010507800 D2549010508000 D2549010508200 D2549010508400
D2549010508600 D2549010508800 D2549010509000 D2549010509200
D2549010509400 D2549010509600 D2549010509800 D2549010510000
D2549010510200 D2549010510400 D2549010510600 D2549010510800
D2549010511000 D2549010511200 D2549010511400 D2549010511600
D2549010511800 D2549010512000 D2549010512200 D2549010512400
D2549010512600 D2549010513000 D2549010513200 D2549010513400
D2549010513600 D2549010513800 D2549010514000 D2549010514200
D2549010514400 D2549010514600 D2549010514800 D2549010600000
D2549010600200 D2549010600400 D2549010600600 D2549010600800
D2549010601000 D2549010601200 D2549010601400 D2549010601600
D2549010601800 D2549010602000 D2549010602200 D2549010602400
D2549010602600 D2549010602800 D2549010603000 D2549010603200
D2549010603400 D2549010603600 D2549010603800 D2549010604000
D2549010604200 D2549010604400 D2549010604600 D2549010604800
D2549010605000 D2549010605200 D2549010605600 D2549010605800
D2549010606000 D2549010606200 D2549010606400 D2549010606600
D2549010606800 D2549010607000 D2549010607200 D2549010607400
D2549010607600 D2549010607800 D2549010608200 D2549010608400
D2549010608600 D2549010608800 D2549010609000 D2549010609200
D2549010609400 D2549010609600 D2549010609800 D2549010610000
D2549010610200 D2549010610400 D2549010610600 D2549010610800
D2549010611000 D2549010611200 D2549010611600 D2549010611800
D2549010612000 D2549010612200 D2549010612400 D2549010612600
D2549010613000 D2549010613200 D2549010613400 D2549010613600
D2549010613800 D2549010614200 D2549010614400 D2549010614600
D2549010614800 D2549020300400 D2549020300600 D2549020300800
D2549020301000 D2549020301800 D2549020302000 D2549020302800
D2549020400000 D2549020400200 D2549020400400 D2549020400600
D2549020400800 D2549020401000 D2549020401200 D2549020401400
D2549020401600 D2549020402000 D2549020402200 D2549020402400
D2549020402600 D2549020403200 D2549020403400 D2549020403600
D2549020403800 D2549020404000 D2549020404200 D2549020404400
D2549020404600 D2549020404800 D2549020405000 D2549020405200
D2549020405400 D2549020405600 D2549020405800 D2549020406000
D2549020406200 D2549020406400 D2549020406600 D2549020406800
D2549020407000 D2549020407200 D2549020407400 D2549020407600
D2549020407800 D2549020408000 D2549020408200 D2549020408600
D2549020408800 D2549020409000 D2549020409200 D2549020409400
D2549020409600 D2549020409800 D2549020410200 D2549020410400
D2549020410600 D2549020410800 D2549020411000 D2549020411400
D2549020411600 D2549020412600 D2549020412800 D2549020413000
D2549020413400 D2549020414200 D2549020500000 D2549020500200
D2549020500400 D2549020500600 D2549020500800 D2549020501000
D2549020501200 D2549020501400 D2549020501600 D2549020501800
D2549020502000 D2549020502200 D2549020502400 D2549020502600

D2549020502800 D2549020503000 D2549020503200 D2549020503400
D2549020503600 D2549020503800 D2549020504000 D2549020504200
D2549020504400 D2549020504600 D2549020504800 D2549020505000
D2549020505200 D2549020505400 D2549020505600 D2549020505800
D2549020506000 D2549020506200 D2549020506400 D2549020506600
D2549020506800 D2549020507000 D2549020507200 D2549020507400
D2549020507600 D2549020507800 D2549020508000 D2549020508200
D2549020508400 D2549020508600 D2549020508800 D2549020509000
D2549020509200 D2549020509600 D2549020509800 D2549020510000
D2549020510400 D2549020510600 D2549020510800 D2549020511000
D2549020511200 D2549020511600 D2549020511800 D2549020512000
D2549020512200 D2549020512400 D2549020512600 D2549020512800
D2549020513000 D2549020513200 D2549020513400 D2549020513600
D2549020513800 D2549020514000 D2549020514200 D2549020514400
D2549020514600 D2549020514800 D2549020600000 D2549020600200
D2549020600400 D2549020600800 D2549020601000 D2549020601200
D2549020601400 D2549020601600 D2549020601800 D2549020602000
D2549020602200 D2549020602400 D2549020602600 D2549020602800
D2549020603000 D2549020603200 D2549020603400 D2549020603600
D2549020603800 D2549020604000 D2549020604200 D2549020604400
D2549020604600 D2549020604800 D2549020605000 D2549020605200
D2549020605400 D2549020605600 D2549020605800 D2549020606000
D2549020606400 D2549020606600 D2549020606800 D2549020607000
D2549020607200 D2549020607400 D2549020607600 D2549020607800
D2549020608200 D2549020608400 D2549020608600 D2549020608800
D2549020609000 D2549020609200 D2549020609400 D2549020609600
D2549020609800 D2549020610000 D2549020610200 D2549020610400
D2549020610600 D2549020610800 D2549020611000 D2549020611200
D2549020611400 D2549020611600 D2549020611800 D2549020612000
D2549020612200 D2549020612400 D2549020612600 D2549020612800
D2549020613000 D2549020613200 D2549020613600 D2549020613800
D2549020614000 D2549020614400 D2549020614600 D2549020614800
D2549020700000 D2549020700200 D2549020700400 D2549020700600
D2549020700800 D2549020701000 D2549020701200 D2549020701400
D2549020701600 D2549020701800 D2549020702000 D2549020702200
D2549020702400 D2549020702600 D2549020702800 D2549020703200
D2549020703400 D2549020703600 D2549020703800 D2549020704000
D2549020704200 D2549020704400 D2549020704600 D2549020704800
D2549020705000 D2549020705200 D2549020705400 D2549020705600
D2549020705800 D2549020706000 D2549020706200 D2549020706400
D2549020706600 D2549020706800 D2549020707000 D2549020707200
D2549020707400 D2549020707600 D2549020707800 D2549020708000
D2549020708200 D2549020708400 D2549020708600 D2549020708800
D2549020709000 D2549020709200 D2549020709400 D2549020709600
D2549020709800 D2549020710000 D2549020710200 D2549020710400
D2549020710600 D2549020710800 D2549020711000 D2549020711200
D2549020711400 D2549020711600 D2549020712000 D2549020712200

D2549020712400 D2549020712600 D2549020712800 D2549020713000
D2549020713200 D2549020713400 D2549020713600 D2549020713800
D2549020714000 D2549020714400 D2549020714600 D2549020800000
D2549020800200 D2549020800400 D2549020800600 D2549020800800
D2549020801000 D2549020801200 D2549020801400 D2549020801600
D2549020801800 D2549020802000 D2549020802200 D2549020802400
D2549020802600 D2549020802800 D2549020803000 D2549020803200
D2549020803400 D2549020803600 D2549020803800 D2549020804000
D2549020804200 D2549020804400 D2549020804800 D2549020805000
D2549020805400 D2549020805600 D2549020805800 D2549020806000
D2549020806200 D2549020806400 D2549020806600 D2549020806800
D2549020807000 D2549020807200 D2549020807600 D2549020807800
D2549020808200 D2549020808400 D2549020808600 D2549020808800
D2549020809000 D2549020809400 D2549020809600 D2549020809800
D2549020810000 D2549020810200 D2549020810400 D2549020810600
D2549020810800 D2549020811200 D2549020811400 D2549020811600
D2549020811800 D2549020812000 D2549020812200 D2549020812400
D2549020812600 D2549020812800 D2549020813000 D2549020813200
D2549020813400 D2549020813600 D2549020813800 D2549020814000
D2549020814200 D2549020814400 D2549020814600 D2549020814800
D2549030400000 D2549030400200 D2549030400400 D2549030400600
D2549030401000 D2549030401200 D2549030401400 D2549030401600
D2549030401800 D2549030402600 D2549030402800 D2549030403000
D2549030403400 D2549030403600 D2549030403800 D2549030404000
D2549030404200 D2549030404400 D2549030404600 D2549030404800
D2549030405000 D2549030405600 D2549030405800 D2549030406000
D2549030406400 D2549030406600 D2549030406800 D2549030407000
D2549030407400 D2549030407600 D2549030407800 D2549030408000
D2549030408400 D2549030409200 D2549030409800 D2549030410000
D2549030410400 D2549030411200 D2549030411400 D2549030411600
D2549030411800 D2549030412000 D2549030412400 D2549030412600
D2549030412800 D2549030413200 D2549030413600 D2549030414400
D2549030414800 D2549030500200 D2549030500400 D2549030500600
D2549030500800 D2549030501000 D2549030501200 D2549030501400
D2549030501600 D2549030501800 D2549030502000 D2549030502200
D2549030502400 D2549030502600 D2549030502800 D2549030503000
D2549030503200 D2549030503400 D2549030503600 D2549030503800
D2549030504000 D2549030504200 D2549030504600 D2549030504800
D2549030505200 D2549030505400 D2549030505600 D2549030505800
D2549030506000 D2549030506200 D2549030506400 D2549030506600
D2549030506800 D2549030507000 D2549030507200 D2549030507400
D2549030507600 D2549030507800 D2549030508000 D2549030508200
D2549030508400 D2549030508600 D2549030508800 D2549030509000
D2549030509200 D2549030509400 D2549030509600 D2549030509800
D2549030510000 D2549030510200 D2549030510400 D2549030510600
D2549030510800 D2549030511000 D2549030511200 D2549030511400
D2549030511600 D2549030511800 D2549030512000 D2549030512200

D2549030512400 D2549030512800 D2549030513000 D2549030513200
D2549030513400 D2549030513600 D2549030513800 D2549030514000
D2549030514200 D2549030514400 D2549030514600 D2549030514800
D2549030600000 D2549030600200 D2549030600400 D2549030600600
D2549030600800 D2549030601000 D2549030601200 D2549030601400
D2549030601600 D2549030601800 D2549030602000 D2549030602200
D2549030602400 D2549030602600 D2549030602800 D2549030603000
D2549030603200 D2549030603400 D2549030603600 D2549030603800
D2549030604200 D2549030604400 D2549030604600 D2549030604800
D2549030605000 D2549030605200 D2549030605400 D2549030605600
D2549030605800 D2549030606000 D2549030606200 D2549030606400
D2549030606600 D2549030606800 D2549030607000 D2549030607200
D2549030607400 D2549030607600 D2549030607800 D2549030608000
D2549030608200 D2549030608400 D2549030608600 D2549030608800
D2549030609000 D2549030609200 D2549030609800 D2549030610000
D2549030610200 D2549030610400 D2549030610600 D2549030611000
D2549030611200 D2549030611400 D2549030611600 D2549030611800
D2549030612000 D2549030612200 D2549030612400 D2549030612600
D2549030612800 D2549030613200 D2549030613400 D2549030613600
D2549030613800 D2549030614000 D2549030614200 D2549030614400
D2549030614600 D2549030614800 D2549030700200 D2549030700400
D2549030701000 D2549030701200 D2549030702600 D2549030703400
D2549030703600 D2549030705200 D2549040500200 R225401107-000 R225401107-
002 R225401107-004 R225401115-000 R225401115-002 R225401128-000 R225401133-
000 R225401134-000 R225401134-002 R225401134-004 R225401134-006 R225401134-
008 R225401134-010 R225401134-012 R225401134-016 R225401134-018 R225401134-
020 R225401134-022 R225401134-024 R225401134-026 R225401134-028 R225401134-
030 R225401134-036 R225401136-000 R225401136-004 R225401136-006 R225401136-
010 R225401136-012 R225401136-016 R225401136-018 R225401136-020 R225401136-
022 R225401136-024 R225401137-000 R225401137-002 R225401137-004 R225401137-
006 R225401137-008 R225401137-010 R225401137-012 R225401137-014 R225401137-
016 R225401139-000 R225401142-000 R225401142-002 R225401145-000 R225401145-
002 R225401145-004 R225401145-006 R225401145-008 R225401145-010 R225401145-
012 R225401145-014 R225401146-000 R225401146-002 R225401152-000 R225401152-
002 R225401152-004 R225401152-006 R225401152-008 R225401152-010 R225401153-
000 R225401159-000 R225401160-000 R225401160-002 R225401168-000 R225401168-
002 R225401168-004 R225401168-006 R225401168-008 R225401168-014 R225401168-
016 R225401168-018 R225401168-020 R225401168-022 R225401168-024 R225401168-
028 R225401172-000 R225401172-002 R225401172-004 R225401172-006 R225401172-
008 R225401172-010 R225401172-012 R225401172-014 R225401172-016 R225401172-
018 R225401175-000 R225401175-002 R225401176-000 R225401183-000 R225401183-
002 R225401183-004 R225401183-006 R225401183-008 R225401188-000 R225401188-
002 R225401188-004 R225401188-006 R225401192-000 R225401192-002 R225401195-
000 R225401196-000 R225401196-002 R225401196-004 R225401196-006 R225401196-
008 R225401196-010 R225401196-012 R225401196-014 R225401196-016 R225401196-
018 R225401196-020 R225401196-022 R225401196-024 R225401196-034 R225401196-
036 R225401196-038 R225401196-040 R225401196-042 R225401196-044 R225401196-

046 R225401196-048 R225401196-050 R225401196-052 R225401196-054 R225401196-056 R225401196-058 R225401196-060 R225401196-062 R225401196-064 R225401196-066 R225401196-068 R225401196-070 R225401199-000 R225401199-002 R225401199-004 R225401199-006 R225401199-008 R225401199-010 R225401199-012 R225401600-000 R225401600-002 R225401600-004 R225401602-000 R225401603-000 R225401605-000 R225401605-002 R225401609-000 R225401611-000 R225401611-006 R225401611-008 R225401611-010 R225401611-012 R225401611-014 R225401611-016 R225401611-018 R225401613-000 R225401614-000 R225401618-000 R225401618-002 R225401619-000 R225401619-002 R225401622-000 R225401622-002 R225401624-000 R225401625-000 R225401627-000 R225401627-002 R225401627-004 R225401629-000 R225401629-002 R225401639-000 R225401639-002 R225401643-000 R225401643-002 R225401643-004 R225401643-006 R225401643-008 R225401646-000 R225401646-002 R225401647-000 R225401648-000 R225401648-002 R225401648-004 R225401648-006 R225401648-008 R225401649-000 R225401656-000 R225401656-002 R225401658-000 R225401662-000 R225401662-002 R225401676-000 R225401683-000 R225401685-000 R225401685-002 R225401688-000 R225401689-004 R225401689-006 R225401693-000 R225401811-000

1. Installation of the Ceiling Panel (04-1)

   (a) Attach the lavatory ceiling panel 04-010 with the screws 04-020, 04-040 and the washers 04-030 to the lavatory structure.

   (b) Attach the rivets 04-060 and the nuts 04-050.

TASK 25-41-51-400-821-B01

D2549010401600 D2549010401800 D2549010405200 D2549010405600 D2549010611400
D2549020300000 D2549020301600 D2549020403000 D2549020411200 D2549020411800
D2549020412000 D2549020412200 D2549020412400 D2549020413200 D2549020413600
D2549020413800 D2549020414000 D2549020414600 D2549020414800 D2549020805200
D2549020807400 D2549030402000 D2549030402200 D2549030402400 D2549030405200
D2549030405400 D2549030407200 D2549030408200 D2549030408600 D2549030409000
D2549030409400 D2549030409600 D2549030410200 D2549030410600 D2549030410800
D2549030412200 D2549030413000 D2549030413400 D2549030414000 D2549030414200
D2549030414600 D2549030700000 D2549030700600 D2549030700800 D2549030701400
D2549030701600 D2549030701800 D2549030702000 D2549030702200 D2549030702400
D2549030702800 D2549030703000 D2549030703200 D2549030703800 D2549030704000
D2549030704200 D2549030704400 D2549030704600 D2549030704800 D2549030705600
D2549040500400 D2549040500600 D2549040500800 D2549040501000 D2549040501200
D2549040501400 D2549040501600 D2549040501800 D2549040502000 R225401134-014
R225401134-032 R225401134-034 R225401134-038 R225401136-008 R225401136-014
R225401168-010 R225401168-012 R225401168-026 R225401611-020 R225401671-000
R225401671-002 R225401673-000 R225401673-002 R225401673-004 R225401673-006
R225401675-000 R225401691-000 R225401691-002 R225401697-000 R225401697-002
R225401803-000 R225401803-002 R225401808-000 R225401814-000

220. Installation of the Ceiling Panel

A. General

This task gives you the installation and assembly procedures of the component.

B. Procedure

WARNING: BE CAREFUL WHEN YOU USE SOLVENTS/CLEANING AGENTS, SEALANTS AND OTHER MATERIALS. OBEY THE MATERIAL MANUFACTURER'S INSTRUCTIONS AND THE LOCAL REGULATIONS. MAKE SURE THAT THERE IS A GOOD FLOW OF AIR THROUGH THE WORK AREA. DO NOT BREATHE THE FUMES. DO NOT SMOKE. DO NOT USE THESE MATERIALS NEAR A FLAME, SPARKS OR SOURCES OF HEAT. USE PROTECTIVE CLOTHING, GOGGLES AND GLOVES. IF YOU GET ONE OF THESE MATERIALS ON YOUR SKIN OR IN YOUR EYES, FLUSH IT AWAY WITH A FLOW OF CLEAN WATER. IF YOU GET ONE OF THESE MATERIALS IN YOUR MOUTH, GET IMMEDIATE MEDICAL AID. IN GENERAL, THESE MATERIALS ARE POISONOUS, FLAMMABLE AND SKIN IRRITANTS.

CAUTION: DO ALL THE WORK ON A CLEAN, SOFT SURFACE TO PREVENT DAMAGE TO THE COMPONENTS.

CAUTION: MAKE SURE THAT ALL THE PARTS ARE CLEAN BEFORE YOU ASSEMBLE THEM.

SUB TASK 25-41-51-400-065-A01

D2549010401600 D2549010401800 D2549010405200 D2549010405600 D2549010611400 D2549020300000 D2549020301600 D2549020403000 D2549020411200 D2549020411800 D2549020412000 D2549020412200 D2549020412400 D2549020413200 D2549020413600 D2549020413800 D2549020414000 D2549020414600 D2549020414800 D2549020805200 D2549020807400 D2549030402000 D2549030402200 D2549030402400 D2549030405200 D2549030405400 D2549030407200 D2549030408200 D2549030408600 D2549030409000 D2549030409400 D2549030409600 D2549030410200 D2549030410600 D2549030410800 D2549030412200 D2549030413000 D2549030413400 D2549030414000 D2549030414200 D2549030414600 D2549030700000 D2549030700600 D2549030700800 D2549030701400 D2549030701600 D2549030701800 D2549030702000 D2549030702200 D2549030702400 D2549030702800 D2549030703000 D2549030703200 D2549030703800 D2549030704000 D2549030704200 D2549030704400 D2549030704600 D2549030704800 D2549030705600 D2549040500400 D2549040500600 D2549040500800 D2549040501000 D2549040501200 D2549040501400 D2549040501600 D2549040501800 D2549040502000 R225401134-014 R225401134-032 R225401134-034 R225401134-038 R225401136-008 R225401136-014 R225401168-010 R225401168-012 R225401168-026 R225401611-020 R225401671-000 R225401671-002 R225401673-000 R225401673-002 R225401673-004 R225401673-006 R225401675-000 R225401691-000 R225401691-002 R225401697-000 R225401697-002 R225401803-000 R225401803-002 R225401808-000 R225401814-000

1. Installation of the Ceiling Panel (04A-1)

   (a) Attach the ceiling assembly 04A-010 with the screws 04A-020, 04A-040 and the washers 04A-030 to the lavatory structure.

TASK 25-41-51-400-822-A01

D2547161903000 D2549010500000 D2549010500400 D2549010500600 D2549010500800
D2549010501000 D2549010501200 D2549010501400 D2549010501600 D2549010501800
D2549010502000 D2549010502200 D2549010502600 D2549010502800 D2549010503200
D2549010503400 D2549010503600 D2549010503800 D2549010504200 D2549010504400
D2549010504600 D2549010504800 D2549010505000 D2549010505200 D2549010505400
D2549010505600 D2549010505800 D2549010506000 D2549010506200 D2549010506400
D2549010506800 D2549010507000 D2549010507200 D2549010507400 D2549010507600
D2549010507800 D2549010508000 D2549010508200 D2549010508400 D2549010508600
D2549010508800 D2549010509000 D2549010509200 D2549010509400 D2549010509600
D2549010509800 D2549010510000 D2549010510400 D2549010510600 D2549010510800
D2549010511000 D2549010511400 D2549010511600 D2549010511800 D2549010512000
D2549010512200 D2549010512400 D2549010513000 D2549010513200 D2549010513400
D2549010513600 D2549010513800 D2549010514000 D2549010514400 D2549010600000
D2549010600200 D2549010600400 D2549010600600 D2549010601000 D2549010601200
D2549010602000 D2549010602400 D2549020500000 D2549020500400 D2549020500600
D2549020500800 D2549020501000 D2549020501200 D2549020501400 D2549020501600
D2549020501800 D2549020502000 D2549020502400 D2549020502600 D2549020502800
D2549020503000 D2549020503200 D2549020503400 D2549020503600 D2549020504000
D2549020504200 D2549020504400 D2549020504600 D2549020504800 D2549020505000
D2549020505200 D2549020506000 D2549020506200 D2549020506400 D2549020506600
D2549020506800 D2549020507000 D2549020510800 D2549020600000 D2549020600200
D2549020600400 D2549020600800 D2549020601000 D2549020601400 D2549020601600
D2549020601800 D2549020602000 D2549020602200 D2549020602400 D2549020602800
D2549020603400 D2549020603800 D2549020604200 D2549020604400 D2549020604600
D2549020604800 D2549020605000 D2549020605200 D2549020605600 D2549020606400
D2549020606600 D2549020606800 D2549020607000 D2549020607400 D2549020607600
D2549020607800 D2549020608200 D2549020608400 D2549020608600 D2549020609000
D2549020609200 D2549020609400 D2549020609600 D2549020609800 D2549020610200
D2549020610600 D2549020611000 D2549020611200 D2549020611400 D2549020611800
D2549020612000 D2549020612200 D2549020612400 D2549020612600 D2549020612800
D2549020613200 D2549020613600 D2549020613800 D2549020614000 D2549020614600
D2549020701000 D2549020701200 D2549020701400 D2549020701800 D2549020702000
D2549020703200 D2549020703600 D2549020704200 D2549020704600 D2549030500200
D2549030500400 D2549030500600 D2549030500800 D2549030501000 D2549030501200
D2549030501400 D2549030501600 D2549030501800 D2549030502000 D2549030502400
D2549030502600 D2549030502800 D2549030503000 D2549030503400 D2549030503600
D2549030504000 D2549030504200 D2549030504600 D2549030504800 D2549030505200
D2549030505400 D2549030505600 D2549030506000 D2549030506200 D2549030506400
D2549030506600 D2549030507000 D2549030507200 D2549030507400 D2549030507600
D2549030507800 D2549030508200 D2549030508400 D2549030508600 D2549030508800
D2549030509200 D2549030509400 D2549030510600 D2549030510800 D2549030511000
D2549030511200 D2549030511800 R225401107-000 R225401115-002 R225401128-000
R225401133-000 R225401134-000 R225401134-002 R225401134-004 R225401134-006
R225401134-016 R225401136-016 R225401137-000 R225401137-002 R225401137-004
R225401137-010 R225401137-012 R225401139-000 R225401142-000 R225401145-000
R225401146-000 R225401146-002 R225401159-000 R225401160-002 R225401168-004

R225401172-002 R225401172-004 R225401175-000 R225401175-002 R225401176-000
R225401188-000 R225401188-002 R225401188-004 R225401188-006

221. Installation of the Lavatory Attachment

A. General

This task gives you the installation and assembly procedures of the component.

B. Procedure

WARNING: **BE CAREFUL WHEN YOU USE SOLVENTS/CLEANING AGENTS, SEALANTS AND OTHER MATERIALS. OBEY THE MATERIAL MANUFACTURER'S INSTRUCTIONS AND THE LOCAL REGULATIONS. MAKE SURE THAT THERE IS A GOOD FLOW OF AIR THROUGH THE WORK AREA. DO NOT BREATHE THE FUMES. DO NOT SMOKE. DO NOT USE THESE MATERIALS NEAR A FLAME, SPARKS OR SOURCES OF HEAT. USE PROTECTIVE CLOTHING, GOGGLES AND GLOVES. IF YOU GET ONE OF THESE MATERIALS ON YOUR SKIN OR IN YOUR EYES, FLUSH IT AWAY WITH A FLOW OF CLEAN WATER. IF YOU GET ONE OF THESE MATERIALS IN YOUR MOUTH, GET IMMEDIATE MEDICAL AID. IN GENERAL, THESE MATERIALS ARE POISONOUS, FLAMMABLE AND SKIN IRRITANTS.**

CAUTION: **DO ALL THE WORK ON A CLEAN, SOFT SURFACE TO PREVENT DAMAGE TO THE COMPONENTS.**

CAUTION: **MAKE SURE THAT ALL THE PARTS ARE CLEAN BEFORE YOU ASSEMBLE THEM.**

SUB TASK 25-41-51-400-071-A01

D2547161903000 D2549010500000 D2549010500400 D2549010500600
D2549010500800 D2549010501000 D2549010501200 D2549010501400
D2549010501600 D2549010501800 D2549010502000 D2549010502200
D2549010502600 D2549010502800 D2549010503200 D2549010503400
D2549010503600 D2549010503800 D2549010504200 D2549010504400
D2549010504600 D2549010504800 D2549010505000 D2549010505200
D2549010505400 D2549010505600 D2549010505800 D2549010506000
D2549010506200 D2549010506400 D2549010506800 D2549010507000
D2549010507200 D2549010507400 D2549010507600 D2549010507800
D2549010508000 D2549010508200 D2549010508400 D2549010508600
D2549010508800 D2549010509000 D2549010509200 D2549010509400
D2549010509600 D2549010509800 D2549010510000 D2549010510400
D2549010510600 D2549010510800 D2549010511000 D2549010511400
D2549010511600 D2549010511800 D2549010512000 D2549010512200
D2549010512400 D2549010513000 D2549010513200 D2549010513400
D2549010513600 D2549010513800 D2549010514000 D2549010514400

D2549010600000 D2549010600200 D2549010600400 D2549010600600
D2549010601000 D2549010601200 D2549010602000 D2549010602400
D2549020500000 D2549020500400 D2549020500600 D2549020500800
D2549020501000 D2549020501200 D2549020501400 D2549020501600
D2549020501800 D2549020502000 D2549020502400 D2549020502600
D2549020502800 D2549020503000 D2549020503200 D2549020503400
D2549020503600 D2549020504000 D2549020504200 D2549020504400
D2549020504600 D2549020504800 D2549020505000 D2549020505200
D2549020506000 D2549020506200 D2549020506400 D2549020506600
D2549020506800 D2549020507000 D2549020600000 D2549020600200
D2549020600400 D2549020600800 D2549020601000 D2549020601400
D2549020601600 D2549020601800 D2549020602000 D2549020602200
D2549020602400 D2549020602800 D2549020603400 D2549020603800
D2549020604200 D2549020604400 D2549020604600 D2549020604800
D2549020605000 D2549020605200 D2549020605600 D2549020606400
D2549020606600 D2549020606800 D2549020607000 D2549020607400
D2549020607600 D2549020607800 D2549020608200 D2549020608400
D2549020608600 D2549020609000 D2549020609200 D2549020609400
D2549020609600 D2549020609800 D2549020610200 D2549020610600
D2549020611000 D2549020611200 D2549020611400 D2549020611800
D2549020612000 D2549020612200 D2549020612400 D2549020612600
D2549020612800 D2549020613200 D2549020613600 D2549020613800
D2549020614000 D2549020614600 D2549020701000 D2549020701200
D2549020701400 D2549020701800 D2549020702000 D2549020703200
D2549020703600 D2549020704200 D2549020704600 D2549030500200
D2549030500400 D2549030500600 D2549030500800 D2549030501000
D2549030501200 D2549030501400 D2549030501600 D2549030501800
D2549030502000 D2549030502400 D2549030502600 D2549030502800
D2549030503000 D2549030503400 D2549030503600 D2549030504000
D2549030504200 D2549030504600 D2549030504800 D2549030505200
D2549030505400 D2549030505600 D2549030506000 D2549030506200
D2549030506400 D2549030506600 D2549030507000 D2549030507200
D2549030507400 D2549030507600 D2549030507800 D2549030508200
D2549030508400 D2549030508600 D2549030508800 D2549030509200
D2549030509400 D2549030510600 D2549030510800 D2549030511000
D2549030511200 D2549030511800 R225401107-000 R225401115-002 R225401128-000 R225401133-000 R225401134-000 R225401134-002 R225401134-004 R225401134-006 R225401134-016 R225401136-016 R225401137-000 R225401137-002 R225401137-004 R225401137-010 R225401137-012 R225401139-000 R225401142-000 R225401145-000 R225401146-000 R225401146-002 R225401159-000 R225401160-002 R225401168-004 R225401172-002 R225401172-004 R225401175-000 R225401175-002 R225401176-000 R225401188-000 R225401188-002 R225401188-004 R225401188-006

1. Installation of the Lavatory Attachment (02-1)

   (a) Attach the part of the double spring ball catches 02-280 with the screws 02-290 and the washers 02-300 to the flap 02-240.

(b) Attach the part of the double spring ball catches 02-280 with the screws 02-310, the washers 02-320 and the nuts 02-330 to the angles 02-250.

(c) Attach the lanyard 02-340 with the screw 02-350 to the flap 02-240.

(d) Attach the angles 02-250 and the lanyard 02-340 with the screws 02-260 and the washers 02-270 to the lavatory structure.

(e) Attach the bushing 02-170, the bolt 02-220, the washer 02-230 and the packing 02-180.

(f) Attach the retainer 02-210 and the nut 02-200 to the lavatory structure.

(g) Attach the packings 02-180, the bushings 02-150, 02-160, 02-170 and the bolts 02-140.

(h) Attach the fitting 02-120 with the bolts 02-090, the screws 02-100 and the washers 02-110 to the lavatory structure.

(i) Assemble the strut assemblies 02-020 as follows:

1 Attach the rod end 02-050, the washer 02-040 and the nut 02-060 to the strut 02-080.

2 Attach the rod end 02-070 and the nut 02-030 to the strut 02-080.

(j) Attach the bushings 02-190, the quick release pins 02-010, the lanyards 02-130 and the strut assembly 02-020 to the fitting 02-120.

(k) Attach the bushings 02-190, the quick release pins 02-010, the lanyards 02-130 and the strut assembly 02-020 to the lavatory structure.

SUB TASK 25-41-51-400-071-B01
D2549020510800

2. Installation of the Lavatory Attachment (02-1)

(a) Attach the part of the double spring ball catches 02-280 with the screws 02-290 and the washers 02-300 to the flap 02-240.

(b) Attach the part of the double spring ball catches 02-280 with the screws 02-310, the washers 02-320 and the nuts 02-330 to the angles 02-250.

(c) Attach the lanyard 02-340 with the screw 02-350 to the flap 02-240.

(d) Attach the angles 02-250 and the lanyard 02-340 with the screws 02-260 and the washers 02-270 to the lavatory structure.

(e) Attach the bushing 02-170, the bolt 02-220, the washer 02-230 and the packing 02-180.

(f) Attach the retainer 02-210 and the nut 02-200 to the lavatory structure.

(g) Attach the packings 02-180, the bushings 02-150, 02-160, 02-170 and the bolts 02-140.

(h) Attach the fitting 02-120 with the bolts 02-090, 02-095 to the lavatory structure.

(i) Assemble the strut assemblies 02-020 as follows:

1 Attach the rod end 02-050, the washer 02-040 and the nut 02-060 to the strut 02-080.

2 Attach the rod end 02-070 and the nut 02-030 to the strut 02-080.

(j) Attach the bushings 02-190, the quick release pins 02-010, the lanyards 02-130 and the strut assembly 02-020 to the fitting 02-120.

(k) Attach the bushings 02-190, the quick release pins 02-010, the lanyards 02-130 and the strut assembly 02-020 to the lavatory structure.

TASK 25-41-51-400-822-B01

D2549010402600 D2549010514600 D2549010514800 D2549010600800 D2549010601400
D2549010601600 D2549010602200 D2549010602600 D2549010602800 D2549010603000
D2549010603200 D2549010603400 D2549010603800 D2549010604000 D2549010604200
D2549010604400 D2549010604600 D2549010604800 D2549010605000 D2549010605200
D2549010605600 D2549010605800 D2549010606000 D2549010606200 D2549010606400
D2549010606600 D2549010606800 D2549010607000 D2549010607200 D2549010607800
D2549010608200 D2549010608400 D2549010609400 D2549020407200 D2549020502200
D2549020505600 D2549020507200 D2549020507400 D2549020507600 D2549020508000
D2549020508400 D2549020508600 D2549020508800 D2549020509000 D2549020509200
D2549020509600 D2549020509800 D2549020510000 D2549020511000 D2549020511800
D2549020512000 D2549020512600 D2549020513600 D2549020514200 D2549020514400
D2549020514600 D2549020700000 D2549020700200 D2549020700400 D2549020700600
D2549020701600 D2549020702200 D2549020702400 D2549020702600 D2549020702800
D2549020703400 D2549020703800 D2549020704400 D2549020704800 D2549020705000
D2549020705200 D2549020705400 D2549020706000 D2549020706200 D2549020706600
D2549020706800 D2549020707000 D2549020707200 D2549020707400 D2549020707600
D2549020707800 D2549020708200 D2549020708600 D2549020708800 D2549020709000
D2549020709800 D2549020710000 D2549020710200 D2549020710400 D2549020710600
D2549020710800 D2549020711200 D2549020711400 D2549020712000 D2549020712200
D2549020712600 D2549020713000 D2549020713200 D2549020713400 D2549020713600
D2549020713800 D2549020714600 D2549030503800 D2549030508000 D2549030509800
D2549030510000 D2549030510200 D2549030510400 D2549030511400 D2549030512000
D2549030512400 D2549030512800 D2549030513000 D2549030513200 D2549030513400
D2549030513600 D2549030513800 D2549030514200 D2549030514600 D2549030514800
D2549030600200 D2549030600400 D2549030600600 D2549030600800 D2549030601000
D2549030601400 D2549030601800 D2549030602000 D2549030602200 D2549030602600
D2549030602800 D2549030603000 D2549030603600 D2549030603800 D2549030604400
D2549030604800 D2549030605000 D2549030605600 D2549030605800 D2549030606200
D2549030606600 D2549030606800 D2549030607200 D2549030608600 D2549030609000
D2549030609200 D2549030610200 D2549030611600 D2549030611800 D2549030614000
D2549030614200 D2549030614400 R225401115-000 R225401134-018 R225401134-020
R225401134-022 R225401136-000 R225401136-010 R225401136-020 R225401136-022
R225401137-006 R225401137-008 R225401137-014 R225401142-002 R225401145-002
R225401145-004 R225401145-006 R225401145-012 R225401152-000 R225401152-002
R225401152-004 R225401152-006 R225401153-000 R225401160-000 R225401168-006
R225401168-016 R225401168-018 R225401172-006 R225401172-008 R225401172-010
R225401172-012 R225401172-014 R225401172-016 R225401183-000 R225401183-002
R225401183-008 R225401192-000 R225401195-000 R225401196-000 R225401196-002
R225401196-004 R225401196-034 R225401196-036 R225401196-046 R225401196-048
R225401196-050 R225401600-000 R225401600-002 R225401603-000 R225401605-000
R225401605-002 R225401613-000 R225401618-000 R225401618-002 R225401619-000
R225401619-002 R225401625-000

222. Installation of the Lavatory Attachment

A. General

This task gives you the installation and assembly procedures of the component.

B. Procedure

WARNING: **BE CAREFUL WHEN YOU USE SOLVENTS/CLEANING AGENTS, SEALANTS AND OTHER MATERIALS. OBEY THE MATERIAL MANUFACTURER'S INSTRUCTIONS AND THE LOCAL REGULATIONS. MAKE SURE THAT THERE IS A GOOD FLOW OF AIR THROUGH THE WORK AREA. DO NOT BREATHE THE FUMES. DO NOT SMOKE. DO NOT USE THESE MATERIALS NEAR A FLAME, SPARKS OR SOURCES OF HEAT. USE PROTECTIVE CLOTHING, GOGGLES AND GLOVES. IF YOU GET ONE OF THESE MATERIALS ON YOUR SKIN OR IN YOUR EYES, FLUSH IT AWAY WITH A FLOW OF CLEAN WATER. IF YOU GET ONE OF THESE MATERIALS IN YOUR MOUTH, GET IMMEDIATE MEDICAL AID. IN GENERAL, THESE MATERIALS ARE POISONOUS, FLAMMABLE AND SKIN IRRITANTS.**

CAUTION: **DO ALL THE WORK ON A CLEAN, SOFT SURFACE TO PREVENT DAMAGE TO THE COMPONENTS.**

CAUTION: **MAKE SURE THAT ALL THE PARTS ARE CLEAN BEFORE YOU ASSEMBLE THEM.**

SUB TASK 25-41-51-400-072-A01

D2549010402600 D2549010514600 D2549010514800 D2549010600800
D2549010601400 D2549010601600 D2549010602200 D2549010602600
D2549010602800 D2549010603000 D2549010603200 D2549010603400
D2549010603800 D2549010604000 D2549010604200 D2549010604400
D2549010604600 D2549010604800 D2549010605000 D2549010605200
D2549010605600 D2549010605800 D2549010606000 D2549010606200
D2549010606400 D2549010606600 D2549010606800 D2549010607000
D2549010607200 D2549010607800 D2549010608200 D2549010608400
D2549010609400 D2549020407200 D2549020502200 D2549020505600
D2549020507200 D2549020507400 D2549020507600 D2549020508000
D2549020508400 D2549020508600 D2549020508800 D2549020509000
D2549020509200 D2549020509600 D2549020509800 D2549020510000
D2549020511000 D2549020511800 D2549020512000 D2549020512600
D2549020513600 D2549020514200 D2549020514400 D2549020514600
D2549020700000 D2549020700200 D2549020700400 D2549020700600
D2549020701600 D2549020702200 D2549020702400 D2549020702600
D2549020702800 D2549020703400 D2549020703800 D2549020704400
D2549020704800 D2549020705000 D2549020705200 D2549020705400
D2549020706000 D2549020706200 D2549020706600 D2549020706800
D2549020707000 D2549020707200 D2549020707400 D2549020707600
D2549020707800 D2549020708200 D2549020708600 D2549020708800
D2549020709000 D2549020709800 D2549020710000 D2549020710200
D2549020710400 D2549020710600 D2549020710800 D2549020711200

D2549020711400 D2549020712000 D2549020712200 D2549020712600 D2549020713000 D2549020713200 D2549020713400 D2549020713600 D2549020713800 D2549020714600 D2549030503800 D2549030508000 D2549030509800 D2549030510000 D2549030510200 D2549030510400 D2549030511400 D2549030512000 D2549030512400 D2549030512800 D2549030513000 D2549030513200 D2549030513400 D2549030513600 D2549030513800 D2549030514200 D2549030514600 D2549030514800 D2549030600200 D2549030600400 D2549030600600 D2549030600800 D2549030601000 D2549030601400 D2549030601800 D2549030602000 D2549030602200 D2549030602600 D2549030602800 D2549030603000 D2549030603600 D2549030603800 D2549030604400 D2549030604800 D2549030605000 D2549030605600 D2549030605800 D2549030606200 D2549030606600 D2549030606800 D2549030607200 D2549030608600 D2549030609000 D2549030609200 D2549030610200 D2549030611600 D2549030611800 D2549030614000 D2549030614200 D2549030614400 R225401115-000 R225401134-018 R225401134-020 R225401134-022 R225401136-000 R225401136-010 R225401136-020 R225401136-022 R225401137-006 R225401137-008 R225401137-014 R225401142-002 R225401145-002 R225401145-004 R225401145-006 R225401145-012 R225401152-000 R225401152-002 R225401152-004 R225401152-006 R225401153-000 R225401160-000 R225401168-006 R225401168-016 R225401168-018 R225401172-006 R225401172-008 R225401172-010 R225401172-012 R225401172-014 R225401172-016 R225401183-000 R225401183-002 R225401183-008 R225401192-000 R225401195-000 R225401196-000 R225401196-002 R225401196-004 R225401196-034 R225401196-036 R225401196-046 R225401196-048 R225401196-050 R225401600-000 R225401600-002 R225401603-000 R225401605-000 R225401605-002 R225401613-000 R225401618-000 R225401618-002 R225401619-000 R225401619-002 R225401625-000

1. Installation of the Lavatory Attachment (02A-1)

   (a) Attach the part of the double spring ball catches 02A-280 with the screws 02A-290 and the washers 02A-300 to the flap 02A-240.

   (b) Attach the part of the double spring ball catches 02A-280 with the screws 02A-310, the washers 02A-320 and the nuts 02A-330 to the angles 02A-250.

   (c) Attach the lanyard 02A-340 with the screw 02A-350 to the flap 02A-240.

   (d) Attach the angles 02A-250 and the lanyard 02A-340 with the screws 02A-260 and the washers 02A-270 to the lavatory structure.

   (e) Attach the bushing 02A-170, the bolt 02A-220, the washer 02A-230 and the packing 02A-180.

   (f) Attach the retainer 02A-210 and the nut 02A-200 to the lavatory structure.

(g) Attach the packings 02A-180, the bushings 02A-150, 02A-160, 02A-170 and the bolts 02A-140.

(h) Attach the fitting 02A-120 with the bolts 02A-090, the screws 02A-100, 02A-102, 02A-104 and the washers 02A-110 to the lavatory structure.

(i) Assemble the strut assemblies 02A-020 as follows:

1 Attach the rod end 02A-050, the washer 02A-040 and the nut 02A-060 to the strut 02A-080.

2 Attach the rod end 02A-070 and the nut 02A-030 to the strut 02A-080.

(j) Attach the quick release pin 02A-010, the lanyard 02A-130 and the strut assembly 02A-020 to the fitting 02A-120.

(k) Attach the quick release pin 02A-010, the lanyard 02A-130 and the strut assembly 02A-020 to the lavatory structure.

TASK 25-41-51-400-822-C01

D2549010401600 D2549010402400 D2549010403200 D2549010404200 D2549010405200 D2549010405600 D2549010406000 D2549010406200 D2549010607400 D2549010614200 D2549020300000 D2549020301000 D2549020301600 D2549020302000 D2549020400800 D2549020401400 D2549020402600 D2549020409200 D2549020409800 D2549020410400 D2549020410600 D2549020411000 D2549020411400 D2549020411600 D2549020411800 D2549020412200 D2549020413000 D2549020414000 D2549020414200 D2549020414800 D2549020508200 D2549020708000 D2549020709400 D2549020714400 D2549020807200 D2549030411200 D2549030412600 D2549030412800 D2549030413000 D2549030413200 D2549030414000 D2549030604200 D2549030607000 D2549030607400 D2549030608200 D2549030608800 D2549030610600 D2549030611200 D2549030700000 D2549030700200 D2549030700400 D2549030700600 D2549030700800 D2549030701200 D2549030701800 D2549030702400 D2549030702800 D2549030703800 D2549030704800 D2549040500400 D2549040500800 D2549040501000 D2549040501200 D2549040501600 R225401134-008 R225401134-024 R225401134-026 R225401196-018 R225401196-064 R225401611-000 R225401611-014 R225401611-016 R225401611-018 R225401627-000 R225401627-002 R225401627-004 R225401671-000 R225401671-002 R225401673-002 R225401673-004 R225401685-000 R225401689-004 R225401691-000 R225401691-002 R225401697-000 R225401697-002 R225401808-000 R225401814-000

223. Installation of the Lavatory Attachment

A. General

This task gives you the installation and assembly procedures of the component.

B. Procedure

WARNING: BE CAREFUL WHEN YOU USE SOLVENTS/CLEANING AGENTS, SEALANTS AND OTHER MATERIALS. OBEY THE MATERIAL MANUFACTURER'S INSTRUCTIONS AND THE LOCAL REGULATIONS. MAKE SURE THAT THERE IS A GOOD FLOW OF AIR THROUGH THE WORK AREA. DO NOT BREATHE THE FUMES. DO NOT SMOKE. DO NOT USE THESE MATERIALS NEAR A FLAME, SPARKS OR SOURCES OF HEAT. USE PROTECTIVE CLOTHING, GOGGLES AND GLOVES. IF YOU GET ONE OF THESE MATERIALS ON YOUR SKIN OR IN YOUR EYES, FLUSH IT AWAY WITH A FLOW OF CLEAN WATER. IF YOU GET ONE OF THESE MATERIALS IN YOUR MOUTH, GET IMMEDIATE MEDICAL AID. IN GENERAL, THESE MATERIALS ARE POISONOUS, FLAMMABLE AND SKIN IRRITANTS.

CAUTION: DO ALL THE WORK ON A CLEAN, SOFT SURFACE TO PREVENT DAMAGE TO THE COMPONENTS.

CAUTION: MAKE SURE THAT ALL THE PARTS ARE CLEAN BEFORE YOU ASSEMBLE THEM.

SUB TASK 25-41-51-400-073-A01

D2549010401600 D2549010402400 D2549010403200 D2549010404200 D2549010405200 D2549010405600 D2549010406000 D2549010406200 D2549010607400 D2549010614200 D2549020300000 D2549020301000 D2549020301600 D2549020302000 D2549020400800 D2549020401400 D2549020402600 D2549020409200 D2549020409800 D2549020410400 D2549020410600 D2549020411000 D2549020411400 D2549020411600 D2549020411800 D2549020412200 D2549020413000 D2549020414000 D2549020414200 D2549020414800 D2549020508200 D2549020708000 D2549020709400 D2549020714400 D2549020807200 D2549030411200 D2549030412600 D2549030412800 D2549030413000 D2549030413200 D2549030414000 D2549030604200 D2549030607000 D2549030607400 D2549030608200 D2549030608800 D2549030610600 D2549030611200 D2549030700000 D2549030700200 D2549030700400 D2549030700600 D2549030700800 D2549030701200 D2549030701800 D2549030702400 D2549030702800 D2549030703800 D2549030704800 D2549040500400 D2549040500800 D2549040501000 D2549040501200 D2549040501600 R225401134-008 R225401134-024 R225401134-026 R225401196-018 R225401196-064 R225401611-000 R225401611-014 R225401611-016 R225401611-018 R225401627-000 R225401627-002 R225401627-004 R225401671-000 R225401671-002 R225401673-002 R225401673-004 R225401685-000 R225401689-004 R225401691-000 R225401691-002 R225401697-000 R225401697-002 R225401808-000 R225401814-000

1. Installation of the Lavatory Attachment (02B-1)

   (a) Attach the part of the double spring ball catches 02B-270 with the screws 02B-280 and the washers 02B-290 to the flap 02B-230.

   (b) Attach the part of the double spring ball catches 02B-270 with the screws 02B-300, the washers 02B-310 and the nuts 02B-320 to the angles 02B-240.

   (c) Attach the lanyard 02B-330 with the screw 02B-340 to the flap 02B-230.

   (d) Attach the lanyard 02B-330 and the angles 02B-240 with the screws 02B-250 and the washers 02B-260 to the lavatory structure.

   (e) Attach the bushing 02B-170, the bolt 02B-210, the washer 02B-220 and the packing 02B-180.

   (f) Attach the retainer 02B-200 and the nut 02B-190 to the lavatory structure.

   (g) Attach the packings 02B-180, the bushings 02B-150, 02B-160, 02B-170 and the bolts 02B-140.

(h) Attach the fitting 02B-120 with the bolts 02B-090, the screws 02B-100 and the washers 02B-110 to the lavatory structure.

(i) Assemble the strut assemblies 02B-020 as follows:

1 Attach the rod end 02B-050, the washer 02B-040 and the nut 02B-060 to the strut 02B-080.

2 Attach the rod end 02B-070 and the nut 02B-030 to the strut 02B-080.

(j) Attach the quick release pin 02B-010, the lanyard 02B-130 and the strut assembly 02B-020 to the fitting 02B-120.

(k) Attach the quick release pin 02B-010, the lanyard 02B-130 and the strut assembly 02B-020 to the lavatory structure.

TASK 25-41-51-400-822-D01

D2547160900200 D2547160900400 D2549010400000 D2549010400200 D2549010400400
D2549010400600 D2549010400800 D2549010401000 D2549010401400 D2549010401800
D2549010402000 D2549010402200 D2549010402800 D2549010403000 D2549010403400
D2549010403600 D2549010403800 D2549010404000 D2549010404400 D2549010404600
D2549010404800 D2549010607600 D2549010608600 D2549010608800 D2549010609000
D2549010609200 D2549010609600 D2549010609800 D2549010610000 D2549010610200
D2549010610400 D2549010610600 D2549010610800 D2549010611000 D2549010611200
D2549010611400 D2549010611600 D2549010611800 D2549010612000 D2549010612200
D2549010612400 D2549010612600 D2549010613000 D2549010613200 D2549010613400
D2549010613800 D2549010614400 D2549010614600 D2549010614800 D2549020400000
D2549020400200 D2549020400400 D2549020400600 D2549020401000 D2549020401200
D2549020401600 D2549020402000 D2549020402200 D2549020402400 D2549020403000
D2549020403200 D2549020403400 D2549020403600 D2549020403800 D2549020404000
D2549020404200 D2549020404400 D2549020404600 D2549020404800 D2549020405000
D2549020405200 D2549020405400 D2549020405600 D2549020405800 D2549020406000
D2549020406200 D2549020406400 D2549020406600 D2549020406800 D2549020407000
D2549020407400 D2549020407600 D2549020407800 D2549020408000 D2549020408200
D2549020408600 D2549020408800 D2549020409000 D2549020409400 D2549020409600
D2549020410200 D2549020510400 D2549020510600 D2549020511200 D2549020511600
D2549020512400 D2549020512800 D2549020513200 D2549020513400 D2549020513800
D2549020514800 D2549020601200 D2549020711600 D2549020800000 D2549020800200
D2549020800400 D2549020800600 D2549020801000 D2549020801400 D2549020801800
D2549020802000 D2549020802200 D2549020802400 D2549020802600 D2549020802800
D2549020803000 D2549020803200 D2549020803400 D2549020803600 D2549020804000
D2549020804200 D2549020804400 D2549020804800 D2549020805200 D2549020805400
D2549020805600 D2549020805800 D2549020806000 D2549020806400 D2549020806600
D2549020806800 D2549020807400 D2549020807600 D2549020807800 D2549020808400
D2549020808600 D2549020809000 D2549020809400 D2549020809600 D2549020810000
D2549020810200 D2549020810400 D2549020810600 D2549020810800 D2549020811200
D2549020811400 D2549020811600 D2549020811800 D2549020812000 D2549020812200
D2549020812400 D2549020812600 D2549020812800 D2549020813000 D2549020813200
D2549020813400 D2549020813600 D2549020813800 D2549020814000 D2549020814200
D2549020814400 D2549020814600 D2549020814800 D2549030400000 D2549030400200
D2549030400400 D2549030400600 D2549030401200 D2549030401800 D2549030402000
D2549030402200 D2549030402400 D2549030402600 D2549030402800 D2549030403400
D2549030403600 D2549030403800 D2549030404000 D2549030404200 D2549030404400
D2549030404600 D2549030404800 D2549030405000 D2549030405200 D2549030405400
D2549030405800 D2549030406000 D2549030406400 D2549030406600 D2549030406800
D2549030407000 D2549030407200 D2549030407400 D2549030407600 D2549030407800
D2549030408000 D2549030408200 D2549030408400 D2549030408600 D2549030409000
D2549030409400 D2549030409600 D2549030409800 D2549030410000 D2549030410200
D2549030410400 D2549030410600 D2549030411400 D2549030411600 D2549030411800
D2549030412000 D2549030412200 D2549030412400 D2549030413600 D2549030414400
D2549030414800 D2549030601600 D2549030603200 D2549030607800 D2549030608000
D2549030609800 D2549030610400 D2549030611000 D2549030612200 D2549030612400
D2549030612600 D2549030612800 D2549030613200 D2549030613400 D2549030613600

D2549030613800 D2549030614600 D2549030614800 D2549040500200 D2549040500600
R225401134-010 R225401134-012 R225401134-014 R225401134-028 R225401134-030
R225401134-032 R225401134-034 R225401134-036 R225401134-038 R225401136-004
R225401136-012 R225401136-018 R225401136-024 R225401137-016 R225401145-008
R225401145-010 R225401145-014 R225401152-008 R225401152-010 R225401168-000
R225401168-002 R225401168-008 R225401168-010 R225401168-012 R225401168-014
R225401168-020 R225401168-022 R225401168-024 R225401168-026 R225401168-028
R225401172-000 R225401172-018 R225401183-004 R225401183-006 R225401192-002
R225401196-006 R225401196-008 R225401196-010 R225401196-012 R225401196-014
R225401196-016 R225401196-020 R225401196-022 R225401196-038 R225401196-040
R225401196-042 R225401196-044 R225401196-052 R225401196-054 R225401196-056
R225401196-058 R225401196-060 R225401196-062 R225401196-066 R225401196-068
R225401199-006 R225401199-010 R225401199-012 R225401600-004 R225401602-000
R225401611-006 R225401611-012 R225401614-000 R225401622-000 R225401622-002
R225401624-000 R225401629-000 R225401629-002 R225401639-000 R225401639-002
R225401643-000 R225401643-002 R225401643-004 R225401643-006 R225401643-008
R225401646-000 R225401646-002 R225401647-000 R225401648-000 R225401648-002
R225401648-004 R225401648-006 R225401648-008 R225401649-000 R225401656-000
R225401656-002 R225401658-000 R225401662-000 R225401662-002 R225401673-000
R225401675-000 R225401676-000 R225401683-000 R225401685-002 R225401688-000
R225401693-000

224. Installation of the Lavatory Attachment

A. General

This task gives you the installation and assembly procedures of the component.

B. Procedure

WARNING: **BE CAREFUL WHEN YOU USE SOLVENTS/CLEANING AGENTS, SEALANTS AND OTHER MATERIALS. OBEY THE MATERIAL MANUFACTURER'S INSTRUCTIONS AND THE LOCAL REGULATIONS. MAKE SURE THAT THERE IS A GOOD FLOW OF AIR THROUGH THE WORK AREA. DO NOT BREATHE THE FUMES. DO NOT SMOKE. DO NOT USE THESE MATERIALS NEAR A FLAME, SPARKS OR SOURCES OF HEAT. USE PROTECTIVE CLOTHING, GOGGLES AND GLOVES. IF YOU GET ONE OF THESE MATERIALS ON YOUR SKIN OR IN YOUR EYES, FLUSH IT AWAY WITH A FLOW OF CLEAN WATER. IF YOU GET ONE OF THESE MATERIALS IN YOUR MOUTH, GET IMMEDIATE MEDICAL AID. IN GENERAL, THESE MATERIALS ARE POISONOUS, FLAMMABLE AND SKIN IRRITANTS.**

CAUTION: **DO ALL THE WORK ON A CLEAN, SOFT SURFACE TO PREVENT DAMAGE TO THE COMPONENTS.**

CAUTION: **MAKE SURE THAT ALL THE PARTS ARE CLEAN BEFORE YOU ASSEMBLE THEM.**

SUB TASK 25-41-51-400-070-A01

D2547160900200 D2547160900400 D2549010400000 D2549010400200
D2549010400400 D2549010400600 D2549010400800 D2549010401000
D2549010401400 D2549010401800 D2549010402000 D2549010402200
D2549010402800 D2549010403000 D2549010403400 D2549010403600
D2549010403800 D2549010404000 D2549010404400 D2549010404600
D2549010404800 D2549010607600 D2549010608600 D2549010608800
D2549010609000 D2549010609200 D2549010609600 D2549010609800
D2549010610000 D2549010610200 D2549010610400 D2549010610600
D2549010610800 D2549010611000 D2549010611200 D2549010611400
D2549010611600 D2549010611800 D2549010612000 D2549010612200
D2549010612400 D2549010612600 D2549010613000 D2549010613200
D2549010613400 D2549010613800 D2549010614400 D2549010614600
D2549010614800 D2549020400000 D2549020400200 D2549020400400
D2549020400600 D2549020401000 D2549020401200 D2549020401600
D2549020402000 D2549020402200 D2549020402400 D2549020403000
D2549020403200 D2549020403400 D2549020403600 D2549020403800
D2549020404000 D2549020404200 D2549020404400 D2549020404600
D2549020404800 D2549020405000 D2549020405200 D2549020405400
D2549020405600 D2549020405800 D2549020406000 D2549020406200
D2549020406400 D2549020406600 D2549020406800 D2549020407000
D2549020407400 D2549020407600 D2549020407800 D2549020408000
D2549020408200 D2549020408600 D2549020408800 D2549020409000
D2549020409400 D2549020409600 D2549020410200 D2549020510400
D2549020510600 D2549020511200 D2549020511600 D2549020512400
D2549020512800 D2549020513200 D2549020513400 D2549020513800
D2549020514800 D2549020601200 D2549020711600 D2549020800000
D2549020800200 D2549020800400 D2549020800600 D2549020801000
D2549020801400 D2549020801800 D2549020802000 D2549020802200
D2549020802400 D2549020802600 D2549020802800 D2549020803000
D2549020803200 D2549020803400 D2549020803600 D2549020804000
D2549020804200 D2549020804400 D2549020804800 D2549020805200
D2549020805400 D2549020805600 D2549020805800 D2549020806000
D2549020806400 D2549020806600 D2549020806800 D2549020807400
D2549020807600 D2549020807800 D2549020808400 D2549020808600
D2549020809000 D2549020809400 D2549020809600 D2549020810000
D2549020810200 D2549020810400 D2549020810600 D2549020810800
D2549020811200 D2549020811400 D2549020811600 D2549020811800
D2549020812000 D2549020812200 D2549020812400 D2549020812600
D2549020812800 D2549020813000 D2549020813200 D2549020813400
D2549020813600 D2549020813800 D2549020814000 D2549020814200
D2549020814400 D2549020814600 D2549020814800 D2549030400000
D2549030400200 D2549030400400 D2549030400600 D2549030401200
D2549030401800 D2549030402000 D2549030402200 D2549030402400

D2549030402600 D2549030402800 D2549030403400 D2549030403600 D2549030403800 D2549030404000 D2549030404200 D2549030404400 D2549030404600 D2549030404800 D2549030405000 D2549030405200 D2549030405400 D2549030405800 D2549030406000 D2549030406400 D2549030406600 D2549030406800 D2549030407000 D2549030407200 D2549030407400 D2549030407600 D2549030407800 D2549030408000 D2549030408200 D2549030408400 D2549030408600 D2549030409000 D2549030409400 D2549030409600 D2549030409800 D2549030410000 D2549030410200 D2549030410400 D2549030410600 D2549030411400 D2549030411600 D2549030411800 D2549030412000 D2549030412200 D2549030412400 D2549030413600 D2549030414400 D2549030414800 D2549030601600 D2549030603200 D2549030607800 D2549030608000 D2549030609800 D2549030610400 D2549030611000 D2549030612200 D2549030612400 D2549030612600 D2549030612800 D2549030613200 D2549030613400 D2549030613600 D2549030613800 D2549030614600 D2549030614800 D2549040500200 D2549040500600 R225401134-010 R225401134-012 R225401134-014 R225401134-028 R225401134-030 R225401134-032 R225401134-034 R225401134-036 R225401134-038 R225401136-004 R225401136-012 R225401136-018 R225401136-024 R225401137-016 R225401145-008 R225401145-010 R225401145-014 R225401152-008 R225401152-010 R225401168-000 R225401168-002 R225401168-008 R225401168-010 R225401168-012 R225401168-014 R225401168-020 R225401168-022 R225401168-024 R225401168-026 R225401168-028 R225401172-000 R225401172-018 R225401183-004 R225401183-006 R225401192-002 R225401196-006 R225401196-008 R225401196-010 R225401196-012 R225401196-014 R225401196-016 R225401196-020 R225401196-022 R225401196-038 R225401196-040 R225401196-042 R225401196-044 R225401196-052 R225401196-054 R225401196-056 R225401196-058 R225401196-060 R225401196-062 R225401196-066 R225401196-068 R225401199-006 R225401199-010 R225401199-012 R225401600-004 R225401602-000 R225401611-006 R225401611-012 R225401614-000 R225401622-000 R225401622-002 R225401624-000 R225401629-000 R225401629-002 R225401639-000 R225401639-002 R225401643-000 R225401643-002 R225401643-004 R225401643-006 R225401643-008 R225401646-000 R225401646-002 R225401647-000 R225401648-000 R225401648-002 R225401648-004 R225401648-006 R225401648-008 R225401649-000 R225401656-000 R225401656-002 R225401658-000 R225401662-000 R225401662-002 R225401673-000 R225401675-000 R225401676-000 R225401683-000 R225401685-002 R225401688-000 R225401693-000

1. Installation of the Lavatory Attachment (02C-1)

   (a) Attach the part of the double spring ball catches 02C-260 with the screws 02C-270 and the washers 02C-280 to the flap 02C-220.

   (b) Attach the part of the double spring ball catches 02C-260 with the screws 02C-290, the washers 02C-300 and the nuts 02C-310 to the angles 02C-230.

   (c) Attach the lanyard 02C-320 with the screw 02C-330 to the flap 02C-220.

(d) Attach the angles 02C-230 and the lanyard 02C-320 with the screws 02C-240 and the washers 02C-250 to the lavatory structure.

(e) Attach the bushing 02C-160, the bolt 02C-200, the washer 02C-210 and the packing 02C-170.

(f) Attach the retainer 02C-190 and the nut 02C-180 to the lavatory structure.

(g) Attach the packings 02C-170, the bushings 02C-140, 02C-150, 02C-160 and the bolts 02C-130, 02C-135.

(h) Attach the fitting 02C-100 with the bolts 02C-090, the screws 02C-092, 02C-094 and the washers 02C-096 to the lavatory structure.

(i) Assemble the strut assemblies 02C-020 as follows:

1 Attach the rod end 02C-050, the washer 02C-040 and the nut 02C-060 to the strut 02C-080.

2 Attach the rod end 02C-070 and the nut 02C-030 to the strut 02C-080.

(j) Attach the quick release pin 02C-010, the lanyard 02C-110 and the strut assembly 02C-020 to the fitting 02C-100.

(k) Attach the quick release pin 02C-010, the lanyard 02C-110 and the strut assembly 02C-020 to the lavatory structure.

TASK 25-41-51-400-822-E01

D2549010405000 D2549010405400 D2549010405800 D2549010406400 D2549010406800 D2549010407000 D2549010502400 D2549010511200 D2549010512600 D2549010514200 D2549010601800 D2549010603600 D2549010613600 D2549020300400 D2549020300600 D2549020300800 D2549020301800 D2549020302800 D2549020410800 D2549020411200 D2549020412000 D2549020412400 D2549020412600 D2549020412800 D2549020413200 D2549020413400 D2549020413600 D2549020413800 D2549020414600 D2549020500200 D2549020503800 D2549020505400 D2549020505800 D2549020507800 D2549020512200 D2549020513000 D2549020514000 D2549020602600 D2549020603000 D2549020603200 D2549020603600 D2549020604000 D2549020605400 D2549020605800 D2549020606000 D2549020607200 D2549020608800 D2549020610000 D2549020610400 D2549020610800 D2549020611600 D2549020613000 D2549020614400 D2549020614800 D2549020700800 D2549020704000 D2549020705600 D2549020705800 D2549020706400 D2549020708400 D2549020709200 D2549020709600 D2549020711000 D2549020712400 D2549020712800 D2549020714000 D2549020800800 D2549020801200 D2549020801600 D2549020803800 D2549020805000 D2549020806200 D2549020807000 D2549020808200 D2549020808800 D2549020809800 D2549030401000 D2549030401400 D2549030401600 D2549030403000 D2549030405600 D2549030409200 D2549030410800 D2549030413400 D2549030414200 D2549030414600 D2549030502200 D2549030503200 D2549030505800 D2549030506800 D2549030509000 D2549030509600 D2549030511600 D2549030512200 D2549030514000 D2549030514400 D2549030600000 D2549030601200 D2549030602400 D2549030603400 D2549030604600 D2549030605200 D2549030605400 D2549030606000 D2549030606400 D2549030607600 D2549030608400 D2549030610000 D2549030611400 D2549030612000 D2549030701000 D2549030701400 D2549030701600 D2549030702000 D2549030702200 D2549030702600 D2549030703000 D2549030703200 D2549030703400 D2549030703600 D2549030704000 D2549030704200 D2549030704400 D2549030704600 D2549030705200 D2549030705600 D2549040501400 D2549040501800 D2549040502000 R225401107-002 R225401136-006 R225401136-008 R225401136-014 R225401196-024 R225401196-070 R225401199-000 R225401199-002 R225401199-004 R225401199-008 R225401609-000 R225401611-008 R225401611-010 R225401611-020 R225401673-006 R225401689-006 R225401803-000 R225401803-002 R225401811-000

225. Installation of the Lavatory Attachment

A. General

This task gives you the installation and assembly procedures of the component.

B. Procedure

WARNING: **BE CAREFUL WHEN YOU USE SOLVENTS/CLEANING AGENTS, SEALANTS AND OTHER MATERIALS. OBEY THE MATERIAL MANUFACTURER'S INSTRUCTIONS AND THE LOCAL REGULATIONS. MAKE SURE THAT THERE IS A GOOD FLOW OF AIR THROUGH THE WORK AREA. DO NOT BREATHE THE FUMES. DO NOT SMOKE. DO NOT USE THESE MATERIALS NEAR A FLAME, SPARKS OR SOURCES OF HEAT. USE PROTECTIVE CLOTHING, GOGGLES AND GLOVES. IF YOU GET ONE OF THESE MATERIALS ON YOUR SKIN OR IN YOUR EYES, FLUSH IT AWAY WITH A FLOW OF CLEAN WATER. IF YOU GET ONE OF THESE MATERIALS IN YOUR MOUTH, GET IMMEDIATE MEDICAL AID. IN GENERAL, THESE MATERIALS ARE POISONOUS, FLAMMABLE AND SKIN IRRITANTS.**

CAUTION: **DO ALL THE WORK ON A CLEAN, SOFT SURFACE TO PREVENT DAMAGE TO THE COMPONENTS.**

CAUTION: **MAKE SURE THAT ALL THE PARTS ARE CLEAN BEFORE YOU ASSEMBLE THEM.**

SUB TASK 25-41-51-400-074-A01
D2549020302800 D2549020714000 D2549020806200 D2549020807000 R225401196-024 R225401196-070 R225401609-000

1. Installation of the Lavatory Attachment (02D-1)

   (a) Attach the angles 02D-220 with the screws 02D-230 and the washers 02D-240 to the flap 02D-215.

   (b) Attach the angles 02D-220 with the screws 02D-230 and the washers 02D-240 to the lavatory structure.

   (c) Attach the flap 02D-215 with the screws 02D-260, the washers 02D-240 and the nuts 02D-270 to the angles 02D-220.

   (d) Attach the bushing 02D-150, the bolt 02D-190, the washer 02D-200 and the packing 02D-160.

   (e) Attach the retainer 02D-180 and the nut 02D-170 to the lavatory structure.

   (f) Attach the packings 02D-160, the bushings 02D-130, 02D-140, 02D-150 and the bolts 02D-120, 02D-125.

   (g) Attach the fitting 02D-100 with the bolts 02D-090, 02D-095 to the lavatory structure.

   (h) Assemble the strut assemblies 02D-020 as follows:

1 Attach the rod end 02D-050, the washer 02D-040 and the nut 02D-060 to the strut 02D-080.

2 Attach the rod end 02D-070 and the nut 02D-030 to the strut 02D-080.

(i) Attach the quick release pin 02D-010, the lanyard 02D-110 and the strut assembly 02D-020 to the fitting 02D-100.

(j) Attach the quick release pin 02D-010, the lanyard 02D-110 and the strut assembly 02D-020 to the lavatory structure.

SUB TASK 25-41-51-400-074-B01

D2549010405000 D2549010405400 D2549010405800 D2549010406400 D2549010406800 D2549010407000 D2549010514200 D2549010613600 D2549020300400 D2549020300600 D2549020300800 D2549020301800 D2549020410800 D2549020411200 D2549020412000 D2549020412400 D2549020412600 D2549020412800 D2549020413200 D2549020413400 D2549020413600 D2549020413800 D2549020414600 D2549020603200 D2549020608800 D2549020706400 D2549020800800 D2549020801200 D2549020801600 D2549020803800 D2549020805000 D2549020808200 D2549020808800 D2549020809800 D2549030401400 D2549030401600 D2549030403000 D2549030405600 D2549030409200 D2549030410800 D2549030413400 D2549030414200 D2549030414600 D2549030610000 D2549030612000 D2549030701000 D2549030701400 D2549030701600 D2549030702000 D2549030702200 D2549030702600 D2549030703000 D2549030703200 D2549030703400 D2549030703600 D2549030704000 D2549030704200 D2549030704400 D2549030704600 D2549030705200 D2549030705600 D2549040501400 D2549040501800 D2549040502000 R225401136-006 R225401136-008 R225401136-014 R225401199-000 R225401199-004 R225401199-008 R225401611-010 R225401611-020 R225401673-006 R225401689-006 R225401803-000 R225401803-002 R225401811-000

2. Installation of the Lavatory Attachment (02D-1)

(a) Attach the part of the double spring ball catches 02D-280 with the screws 02D-290 and the washers 02D-300 to the flap 02D-210.

(b) Attach the part of the double spring ball catches 02D-280 with the screws 02D-310, the washers 02D-320 and the nuts 02D-330 to the angles 02D-221.

(c) Attach the lanyard 02D-340 with the screw 02D-350 to the flap 02D-210.

(d) Attach the angles 02D-221 and the lanyard 02D-340 with the screws 02D-231 and the washers 02D-241 to the lavatory structure.

(e) Attach the bushing 02D-150, the bolt 02D-190, the washer 02D-200 and the packing 02D-160.

(f) Attach the retainer 02D-180 and the nut 02D-170 to the lavatory structure.

(g) Attach the packings 02D-160, the bushings 02D-130, 02D-140, 02D-150 and the bolts 02D-120, 02D-125.

(h) Attach the fitting 02D-100 with the bolts 02D-090, 02D-095 to the lavatory structure.

(i) Assemble the strut assemblies 02D-020 as follows:

1 Attach the rod end 02D-050, the washer 02D-040 and the nut 02D-060 to the strut 02D-080.

2 Attach the rod end 02D-070 and the nut 02D-030 to the strut 02D-080.

(j) Attach the quick release pin 02D-010, the lanyard 02D-110 and the strut assembly 02D-020 to the fitting 02D-100.

(k) Attach the quick release pin 02D-010, the lanyard 02D-110 and the strut assembly 02D-020 to the lavatory structure.

SUB TASK 25-41-51-400-074-C01

D2549010502400 D2549010601800 D2549010603600 D2549020512200
D2549020513000 D2549020514000 D2549020602600 D2549020603000
D2549020606000 D2549020614800 D2549020700800 D2549020705600
D2549020705800 D2549020709200 D2549020709600 D2549020711000
D2549020712400 D2549020712800 D2549030401000 D2549030503200
D2549030512200 D2549030514000 D2549030600000 D2549030601200
D2549030602400 D2549030603400 D2549030604600 D2549030605200
D2549030605400 D2549030606000 D2549030606400 D2549030607600
D2549030608400 D2549030611400 R225401199-002 R225401611-008

3. Installation of the Lavatory Attachment (02D-1)

(a) Attach the part of the double spring ball catches 02D-280 with the screws 02D-290 and the washers 02D-300 to the flap 02D-210.

(b) Attach the part of the double spring ball catches 02D-280 with the screws 02D-310, the washers 02D-320 and the nuts 02D-330 to the angles 02D-221.

(c) Attach the lanyard 02D-340 with the screw 02D-350 to the flap 02D-210.

(d) Attach the angles 02D-221 and the lanyard 02D-340 with the screws 02D-231 and the washers 02D-241 to the lavatory structure.

(e) Attach the bushing 02D-150, the bolt 02D-190, the washer 02D-200 and the packing 02D-160.

(f) Attach the retainer 02D-180 and the nut 02D-170 to the lavatory structure.

(g) Attach the packings 02D-160, the bushings 02D-130, 02D-140, 02D-150 and the bolts 02D-120, 02D-125.

(h) Attach the fitting 02D-100 with the bolts 02D-090, the screws 02D-360, 02D-362, 02D-364 and the washers 02D-370 to the lavatory structure.

(i) Assemble the strut assemblies 02D-020 as follows:

1 Attach the rod end 02D-050, the washer 02D-040 and the nut 02D-060 to the strut 02D-080.

2 Attach the rod end 02D-070 and the nut 02D-030 to the strut 02D-080.

(j) Attach the quick release pin 02D-010, the lanyard 02D-110 and the strut assembly 02D-020 to the fitting 02D-100.

(k) Attach the quick release pin 02D-010, the lanyard 02D-110 and the strut assembly 02D-020 to the lavatory structure.

SUB TASK 25-41-51-400-074-D01

D2549010511200 D2549010512600 D2549020500200 D2549020503800 D2549020505400 D2549020505800 D2549020507800 D2549020603600 D2549020604000 D2549020605400 D2549020605800 D2549020607200 D2549020610000 D2549020610400 D2549020610800 D2549020611600 D2549020613000 D2549020614400 D2549020704000 D2549020708400 D2549030502200 D2549030505800 D2549030506800 D2549030509000 D2549030509600 D2549030511600 D2549030514400 R225401107-002

4. Installation of the Lavatory Attachment (02D-1)

(a) Attach the part of the double spring ball catches 02D-280 with the screws 02D-290 and the washers 02D-300 to the flap 02D-210.

(b) Attach the part of the double spring ball catches 02D-280 with the screws 02D-310, the washers 02D-320 and the nuts 02D-330 to the angles 02D-221.

(c) Attach the lanyard 02D-340 with the screw 02D-350 to the flap 02D-210.

(d) Attach the angles 02D-221 and the lanyard 02D-340 with the screws 02D-231 and the washers 02D-241 to the lavatory structure.

(e) Attach the bushing 02D-150, the bolt 02D-190, the washer 02D-200 and the packing 02D-160.

(f) Attach the retainer 02D-180 and the nut 02D-170 to the lavatory structure.

(g) Attach the packings 02D-160, the bushings 02D-130, 02D-140, 02D-150 and the bolts 02D-120, 02D-125.

(h) Attach the fitting 02D-100 with the bolts 02D-090, 02D-095, the screws 02D-360 and the washers 02D-370 to the lavatory structure.

(i) Assemble the strut assemblies 02D-020 as follows:

1 Attach the rod end 02D-050, the washer 02D-040 and the nut 02D-060 to the strut 02D-080.

2 Attach the rod end 02D-070 and the nut 02D-030 to the strut 02D-080.

(j) Attach the quick release pin 02D-010, the lanyard 02D-110 and the strut assembly 02D-020 to the fitting 02D-100.

(k) Attach the quick release pin 02D-010, the lanyard 02D-110 and the strut assembly 02D-020 to the lavatory structure.

TASK 25-41-51-400-822-F01
D2549010510200 R225401107-004

226. Installation of the Lavatory Attachment

A. General

- Not applicable

B. Procedure

SUB TASK 25-41-51-400-098-A01
D2549010510200 R225401107-004

1. Installation of the Lavatory Attachment

(a) Not applicable.

TASK 25-41-51-400-823-A01

D2549010610800 D2549010611000 D2549010611200 D2549010611600 D2549010611800
D2549010612000 D2549010612200 D2549010612400 D2549010612600 D2549010613200
D2549010613400 D2549020513200 D2549020714000 D2549020801400 D2549020802400
D2549020804000 D2549020804200 D2549020804800 D2549020805000 D2549020805400
D2549020805600 D2549020805800 D2549020806000 D2549020806200 D2549020806400
D2549020806800 D2549020807000 D2549020807400 D2549020807600 D2549020808200
D2549020808400 D2549020808600 D2549020808800 D2549020809000 D2549020809400
D2549020809800 D2549020810000 D2549020810200 D2549020810600 D2549020811400
D2549020811600 D2549020811800 D2549020812000 D2549030400600 D2549030401000
D2549030401200 D2549030401400 D2549030401600 D2549030401800 D2549030402000
D2549030402200 D2549030402400 D2549030402600 D2549030402800 D2549030403000
D2549030403400 D2549030403600 D2549030404200 D2549030404400 D2549030404800
D2549030405000 D2549030405200 D2549030405400 D2549030405600 D2549030603200
D2549030612600 D2549030613600 R225401134-030 R225401134-032 R225401134-034
R225401145-010 R225401152-008 R225401168-008 R225401168-010 R225401168-012
R225401168-024 R225401168-026 R225401192-002 R225401196-008 R225401196-010
R225401196-012 R225401196-040 R225401196-044 R225401196-054 R225401196-056
R225401196-058 R225401199-000 R225401199-008 R225401609-000 R225401622-000
R225401622-002 R225401646-000 R225401647-000 R225401648-000

227. Assembly of the Electrical System of the Cockpit Door Locking

A. General

This task gives you the installation and assembly procedures of the component.

B. Procedure

WARNING: BE CAREFUL WHEN YOU USE SOLVENTS/CLEANING AGENTS, SEALANTS AND OTHER MATERIALS. OBEY THE MATERIAL MANUFACTURER'S INSTRUCTIONS AND THE LOCAL REGULATIONS. MAKE SURE THAT THERE IS A GOOD FLOW OF AIR THROUGH THE WORK AREA. DO NOT BREATHE THE FUMES. DO NOT SMOKE. DO NOT USE THESE MATERIALS NEAR A FLAME, SPARKS OR SOURCES OF HEAT. USE PROTECTIVE CLOTHING, GOGGLES AND GLOVES. IF YOU GET ONE OF THESE MATERIALS ON YOUR SKIN OR IN YOUR EYES, FLUSH IT AWAY WITH A FLOW OF CLEAN WATER. IF YOU GET ONE OF THESE MATERIALS IN YOUR MOUTH, GET IMMEDIATE MEDICAL AID. IN GENERAL, THESE MATERIALS ARE POISONOUS, FLAMMABLE AND SKIN IRRITANTS.

CAUTION: DO ALL THE WORK ON A CLEAN, SOFT SURFACE TO PREVENT DAMAGE TO THE COMPONENTS.

CAUTION: MAKE SURE THAT ALL THE PARTS ARE CLEAN BEFORE YOU ASSEMBLE THEM.

SUB TASK 25-41-51-400-083-A01

D2549010610800 D2549010611000 D2549010611200 D2549010611600 D2549010611800 D2549010612000 D2549010612200 D2549010612400 D2549010612600 D2549010613200 D2549010613400 D2549020513200 D2549020714000 D2549020801400 D2549020802400 D2549020804000 D2549020804200 D2549020804800 D2549020805000 D2549020805400 D2549020805600 D2549020805800 D2549020806000 D2549020806200 D2549020806400 D2549020806800 D2549020807000 D2549020807400 D2549020807600 D2549020808200 D2549020808400 D2549020808600 D2549020808800 D2549020809000 D2549020809400 D2549020809800 D2549020810000 D2549020810200 D2549020810600 D2549020811400 D2549020811600 D2549020811800 D2549020812000 D2549030400600 D2549030401000 D2549030401200 D2549030401400 D2549030401600 D2549030401800 D2549030402000 D2549030402200 D2549030402400 D2549030402600 D2549030402800 D2549030403000 D2549030403400 D2549030403600 D2549030404200 D2549030404400 D2549030404800 D2549030405000 D2549030405200 D2549030405400 D2549030405600 D2549030603200 D2549030612600 D2549030613600 R225401134-030 R225401134-032 R225401134-034 R225401145-010 R225401152-008 R225401168-008 R225401168-010 R225401168-012 R225401168-024 R225401168-026 R225401192-002 R225401196-008 R225401196-010 R225401196-012 R225401196-040 R225401196-044 R225401196-054 R225401196-056 R225401196-058 R225401199-000 R225401199-008 R225401609-000 R225401622-000 R225401622-002 R225401646-000 R225401647-000 R225401648-000

1. Assembly of the Electrical System of the Cockpit Door Locking (31-1)

   (a) Attach the screws 31-240 and the washers 31-250.

   (b) Attach the spring sheets 31-230.

   (c) Install and assemble the cable harness assembly 31-010 as follows:

      1 Attach the bracket 31-030, the receptacle connector 31-020 and the connector backshell 31-060 with the screws 31-040 and the nuts 31-050.

      2 Attach the identification ties 31-070 and the identification sleeves 31-120.

TASK 25-41-51-400-823-B01

D2549010400000 D2549010400200 D2549010400400 D2549010400600 D2549010400800 D2549010402000 D2549010402600 D2549010402800 D2549010403000 D2549010611400 D2549010613000 D2549010613800 D2549010614200 D2549010614400 D2549010614600 D2549010614800 D2549020400000 D2549020400200 D2549020403800 D2549020404200 D2549020404400 D2549020404600 D2549020404800 D2549020405000 D2549020405200 D2549020405400 D2549020405600 D2549020405800 D2549020406200 D2549020513800 D2549020801800 D2549020805200 D2549020806600 D2549020807800 D2549020810400 D2549020810800 D2549020811200 D2549020812200 D2549020812400 D2549020812600 D2549020812800 D2549020813000 D2549020813200 D2549020813400 D2549020813600 D2549020813800 D2549020814000 D2549020814200 D2549020814400 D2549020814600 D2549020814800 D2549030404000 D2549030404600 D2549030405800 D2549030406000 D2549030406400 D2549030406600 D2549030406800 D2549030407000 D2549030407200 D2549030407400 D2549030407600 D2549030407800 D2549030408000 D2549030408200 D2549030408400 D2549030409800 D2549030614000 D2549040500200 R225401134-036 R225401136-004 R225401136-018 R225401196-014 R225401196-016 R225401196-060 R225401196-062 R225401199-010 R225401611-006 R225401611-012 R225401639-000 R225401639-002 R225401643-000 R225401643-004 R225401648-002 R225401656-000 R225401656-002 R225401658-000 R225401662-000

228. Assembly of the Electrical System of the Cockpit Door Locking

A. General

This task gives you the installation and assembly procedures of the component.

B. Procedure

WARNING: BE CAREFUL WHEN YOU USE SOLVENTS/CLEANING AGENTS, SEALANTS AND OTHER MATERIALS. OBEY THE MATERIAL MANUFACTURER'S INSTRUCTIONS AND THE LOCAL REGULATIONS. MAKE SURE THAT THERE IS A GOOD FLOW OF AIR THROUGH THE WORK AREA. DO NOT BREATHE THE FUMES. DO NOT SMOKE. DO NOT USE THESE MATERIALS NEAR A FLAME, SPARKS OR SOURCES OF HEAT. USE PROTECTIVE CLOTHING, GOGGLES AND GLOVES. IF YOU GET ONE OF THESE MATERIALS ON YOUR SKIN OR IN YOUR EYES, FLUSH IT AWAY WITH A FLOW OF CLEAN WATER. IF YOU GET ONE OF THESE MATERIALS IN YOUR MOUTH, GET IMMEDIATE MEDICAL AID. IN GENERAL, THESE MATERIALS ARE POISONOUS, FLAMMABLE AND SKIN IRRITANTS.

CAUTION: DO ALL THE WORK ON A CLEAN, SOFT SURFACE TO PREVENT DAMAGE TO THE COMPONENTS.

CAUTION: MAKE SURE THAT ALL THE PARTS ARE CLEAN BEFORE YOU ASSEMBLE THEM.

SUB TASK 25-41-51-400-084-A01

D2549010400000 D2549010400200 D2549010400400 D2549010400600 D2549010400800 D2549010402000 D2549010402600 D2549010402800 D2549010403000 D2549010611400 D2549010613000 D2549010613800 D2549010614200 D2549010614400 D2549010614600 D2549010614800 D2549020400000 D2549020400200 D2549020403800 D2549020404200 D2549020404400 D2549020404600 D2549020404800 D2549020405000 D2549020405200 D2549020405400 D2549020405600 D2549020405800 D2549020406200 D2549020513800 D2549020801800 D2549020805200 D2549020806600 D2549020807800 D2549020810400 D2549020810800 D2549020811200 D2549020812200 D2549020812400 D2549020812600 D2549020812800 D2549020813000 D2549020813200 D2549020813400 D2549020813600 D2549020813800 D2549020814000 D2549020814200 D2549020814400 D2549020814600 D2549020814800 D2549030404000 D2549030404600 D2549030405800 D2549030406000 D2549030406400 D2549030406600 D2549030406800 D2549030407000 D2549030407200 D2549030407400 D2549030407600 D2549030407800 D2549030408000 D2549030408200 D2549030408400 D2549030409800 D2549030614000 D2549040500200 R225401134-036 R225401136-004 R225401136-018 R225401196-014 R225401196-016 R225401196-060 R225401196-062 R225401199-010 R225401611-006 R225401611-012 R225401639-000 R225401639-002 R225401643-000 R225401643-004 R225401648-002 R225401656-000 R225401656-002 R225401658-000 R225401662-000

1. Assembly of the Electrical System of the Cockpit Door Locking (31A-1)

   (a) Attach the clamp 31A-150 with the screw 31A-160 and the washer 31A-170.

   (b) Attach the clamp 31A-140 with the screw 31A-160 and the washer 31A-170.

   (c) Attach the spring sheets 31A-180.

   (d) Install and assemble the cable harness assembly 31A-010 as follows:

      1 Attach the cable ties 31A-040, the receptacle connector 31A-050 and the backshell 31A-060 with the coupling screws 31A-070.

      2 Attach the cable ties 31A-040 and the identification sleeves 31A-190.

      3 Attach the plug connector 31A-020 and the connector backshell 31A-030.

TASK 25-41-51-400-823-C01

D2547160900200 D2547160900400 D2549010401000 D2549010401400 D2549010401600
D2549010401800 D2549010402200 D2549010402400 D2549010403200 D2549010403400
D2549010403600 D2549010403800 D2549010404000 D2549010404200 D2549010404400
D2549010404600 D2549010404800 D2549010405200 D2549010405400 D2549010405600
D2549010406000 D2549010406200 D2549010406400 D2549010406800 D2549010610600
D2549010613600 D2549020300000 D2549020300400 D2549020300600 D2549020300800
D2549020301000 D2549020301600 D2549020301800 D2549020302800 D2549020400400
D2549020400600 D2549020400800 D2549020401000 D2549020401200 D2549020401600
D2549020402000 D2549020402200 D2549020402400 D2549020402600 D2549020403000
D2549020403200 D2549020403400 D2549020403600 D2549020404000 D2549020406000
D2549020406400 D2549020406600 D2549020406800 D2549020407000 D2549020407200
D2549020407400 D2549020407800 D2549020408000 D2549020408200 D2549020408600
D2549020408800 D2549020409000 D2549020409200 D2549020409400 D2549020409600
D2549020409800 D2549020410200 D2549020410400 D2549020410600 D2549020410800
D2549020411200 D2549020411400 D2549020411800 D2549020412000 D2549020412200
D2549020412400 D2549020412600 D2549020412800 D2549020413000 D2549020413600
D2549020414200 D2549020414600 D2549020414800 D2549020804400 D2549020807200
D2549020809600 D2549030408600 D2549030409000 D2549030409200 D2549030409400
D2549030409600 D2549030410000 D2549030410200 D2549030410400 D2549030410600
D2549030410800 D2549030411200 D2549030411400 D2549030411600 D2549030411800
D2549030412000 D2549030412200 D2549030412400 D2549030412600 D2549030412800
D2549030413000 D2549030413200 D2549030413400 D2549030413600 D2549030414000
D2549030414200 D2549030414400 D2549030414600 D2549030414800 D2549030610200
D2549030700000 D2549030700200 D2549030700400 D2549030700600 D2549030700800
D2549030701200 D2549030701400 D2549030701800 D2549030702000 D2549030702200
D2549030702800 D2549030703000 D2549030703200 D2549030703600 D2549030703800
D2549030704200 D2549030704400 D2549030704600 D2549030704800 D2549030705200
D2549030705600 D2549040500400 D2549040500600 D2549040500800 D2549040501200
D2549040501600 D2549040501800 D2549040502000 R225401134-014 R225401134-038
R225401136-006 R225401136-008 R225401136-012 R225401136-014 R225401136-024
R225401152-010 R225401183-004 R225401183-006 R225401196-018 R225401196-020
R225401196-022 R225401196-024 R225401196-042 R225401196-064 R225401196-066
R225401196-068 R225401196-070 R225401199-012 R225401602-000 R225401611-000
R225401611-014 R225401611-016 R225401611-018 R225401611-020 R225401624-000
R225401643-002 R225401643-006 R225401643-008 R225401646-002 R225401648-004
R225401648-006 R225401648-008 R225401649-000 R225401662-002 R225401671-000
R225401671-002 R225401673-000 R225401673-002 R225401675-000 R225401676-000
R225401685-000 R225401685-002 R225401688-000 R225401689-004 R225401689-006
R225401691-000 R225401697-000 R225401697-002 R225401803-000 R225401803-002
R225401808-000 R225401811-000 R225401814-000

229. Assembly of the Electrical System of the Cockpit Door Locking

A. General

This task gives you the installation and assembly procedures of the component.

B. Job Set-up Information

(1) Not applicable

C. Procedure

WARNING: **BE CAREFUL WHEN YOU USE SOLVENTS/CLEANING AGENTS, SEALANTS AND OTHER MATERIALS. OBEY THE MATERIAL MANUFACTURER'S INSTRUCTIONS AND THE LOCAL REGULATIONS. MAKE SURE THAT THERE IS A GOOD FLOW OF AIR THROUGH THE WORK AREA. DO NOT BREATHE THE FUMES. DO NOT SMOKE. DO NOT USE THESE MATERIALS NEAR A FLAME, SPARKS OR SOURCES OF HEAT. USE PROTECTIVE CLOTHING, GOGGLES AND GLOVES. IF YOU GET ONE OF THESE MATERIALS ON YOUR SKIN OR IN YOUR EYES, FLUSH IT AWAY WITH A FLOW OF CLEAN WATER. IF YOU GET ONE OF THESE MATERIALS IN YOUR MOUTH, GET IMMEDIATE MEDICAL AID. IN GENERAL, THESE MATERIALS ARE POISONOUS, FLAMMABLE AND SKIN IRRITANTS.**

CAUTION: **DO ALL THE WORK ON A CLEAN, SOFT SURFACE TO PREVENT DAMAGE TO THE COMPONENTS.**

CAUTION: **MAKE SURE THAT ALL THE PARTS ARE CLEAN BEFORE YOU ASSEMBLE THEM.**

SUB TASK 25-41-51-440-130-A01

D2547160900200 D2547160900400 D2549010401000 D2549010401400
D2549010401600 D2549010401800 D2549010402200 D2549010402400
D2549010403200 D2549010403400 D2549010403600 D2549010403800
D2549010404000 D2549010404200 D2549010404400 D2549010404600
D2549010404800 D2549010405200 D2549010405400 D2549010405600
D2549010406000 D2549010406200 D2549010406400 D2549010406800
D2549010610600 D2549010613600 D2549020300000 D2549020300400
D2549020300600 D2549020300800 D2549020301000 D2549020301600
D2549020301800 D2549020302800 D2549020400400 D2549020400600
D2549020400800 D2549020401000 D2549020401200 D2549020401600
D2549020402000 D2549020402200 D2549020402400 D2549020402600
D2549020403000 D2549020403200 D2549020403400 D2549020403600
D2549020404000 D2549020406000 D2549020406400 D2549020406600
D2549020406800 D2549020407000 D2549020407200 D2549020407400
D2549020407800 D2549020408000 D2549020408200 D2549020408600
D2549020408800 D2549020409000 D2549020409200 D2549020409400
D2549020409600 D2549020409800 D2549020410200 D2549020410400
D2549020410600 D2549020410800 D2549020411200 D2549020411400
D2549020411800 D2549020412000 D2549020412200 D2549020412400
D2549020412600 D2549020412800 D2549020413000 D2549020413600

D2549020414200 D2549020414600 D2549020414800 D2549020804400 D2549020807200 D2549020809600 D2549030408600 D2549030409000 D2549030409200 D2549030409400 D2549030409600 D2549030410000 D2549030410200 D2549030410400 D2549030410600 D2549030410800 D2549030411200 D2549030411400 D2549030411600 D2549030411800 D2549030412000 D2549030412200 D2549030412400 D2549030412600 D2549030412800 D2549030413000 D2549030413200 D2549030413400 D2549030413600 D2549030414000 D2549030414200 D2549030414400 D2549030414600 D2549030414800 D2549030610200 D2549030700000 D2549030700200 D2549030700400 D2549030700600 D2549030700800 D2549030701200 D2549030701400 D2549030701800 D2549030702000 D2549030702200 D2549030702800 D2549030703000 D2549030703200 D2549030703600 D2549030703800 D2549030704200 D2549030704400 D2549030704600 D2549030704800 D2549030705200 D2549030705600 D2549040500400 D2549040500600 D2549040500800 D2549040501200 D2549040501600 D2549040501800 D2549040502000 R225401134-014 R225401134-038 R225401136-006 R225401136-008 R225401136-012 R225401136-014 R225401136-024 R225401152-010 R225401183-004 R225401183-006 R225401196-018 R225401196-020 R225401196-022 R225401196-024 R225401196-042 R225401196-064 R225401196-066 R225401196-068 R225401196-070 R225401199-012 R225401602-000 R225401611-000 R225401611-014 R225401611-016 R225401611-018 R225401611-020 R225401624-000 R225401643-002 R225401643-006 R225401643-008 R225401646-002 R225401648-004 R225401648-006 R225401648-008 R225401649-000 R225401662-002 R225401671-000 R225401671-002 R225401673-000 R225401673-002 R225401675-000 R225401676-000 R225401685-000 R225401685-002 R225401688-000 R225401689-004 R225401689-006 R225401691-000 R225401697-000 R225401697-002 R225401803-000 R225401803-002 R225401808-000 R225401811-000 R225401814-000

1. Assembly of the Electrical System of the Cockpit Door Locking (31B-1)

   (a) Attach the center electric strike 31B-270, the sheets 31B-210, 31B-220, the protective sleeve 31B-230 and the grommet 31B-260 with the screws 31B-240, 31B-250.

   NOTE: For further instructions, see CMMV 25-20-22_80477 (center electric strike).

   (b) Attach the electric strikes 31B-200, the sheets 31B-210, 31B-220, the protective sleeves 31B-230 and the grommets 31B-260 with the screws 31B-240, 31B-250.

   NOTE: For further instructions, see CMMV 25-20-22_80477 (electric strike).

   (c) Attach the clamp 31B-150 with the screw 31B-160 and the washer 31B-170.

(d) Attach the clamp 31B-140 with the screw 31B-160 and the washer 31B-170.

(e) Attach the spring sheets 31B-180.

(f) Install and assemble the cable harness assembly 31B-010 as follows:

1 Attach the cable ties 31B-040, the receptacle connector 31B-050 and the backshell 31B-060 with the coupling screws 31B-070.

2 Attach the cable ties 31B-040.

3 Attach the plug connector 31B-020 and the connector backshell 31B-030.

TASK 25-41-51-400-823-D01

D2547161903000 D2549010405000 D2549010405800 D2549010407000 D2549010500000
D2549010500400 D2549010500600 D2549010500800 D2549010501000 D2549010501200
D2549010501400 D2549010501600 D2549010501800 D2549010502000 D2549010502200
D2549010502400 D2549010502600 D2549010502800 D2549010503200 D2549010503400
D2549010503600 D2549010503800 D2549010504200 D2549010504400 D2549010504600
D2549010504800 D2549010505000 D2549010505200 D2549010505400 D2549010505600
D2549010505800 D2549010506000 D2549010506200 D2549010506400 D2549010506800
D2549010507000 D2549010507200 D2549010507400 D2549010507600 D2549010507800
D2549010508000 D2549010508200 D2549010508400 D2549010508600 D2549010508800
D2549010509000 D2549010509200 D2549010509400 D2549010509600 D2549010509800
D2549010510000 D2549010510200 D2549010510400 D2549010510600 D2549010510800
D2549010511000 D2549010511200 D2549010511400 D2549010511600 D2549010511800
D2549010512000 D2549010512200 D2549010512400 D2549010512600 D2549010513000
D2549010513200 D2549010513400 D2549010513600 D2549010513800 D2549010514000
D2549010514200 D2549010514400 D2549010514600 D2549010514800 D2549010600000
D2549010600200 D2549010600400 D2549010600600 D2549010600800 D2549010601000
D2549010601200 D2549010601400 D2549010601600 D2549010601800 D2549010602000
D2549010602200 D2549010602400 D2549010602600 D2549010602800 D2549010603000
D2549010603200 D2549010603400 D2549010603600 D2549010603800 D2549010604000
D2549010604200 D2549010604400 D2549010604600 D2549010604800 D2549010605000
D2549010605200 D2549010605600 D2549010605800 D2549010606000 D2549010606200
D2549010606400 D2549010606600 D2549010606800 D2549010607000 D2549010607200
D2549010607400 D2549010607600 D2549010607800 D2549010608200 D2549010608400
D2549010608600 D2549010608800 D2549010609000 D2549010609200 D2549010609400
D2549010609600 D2549010609800 D2549010610000 D2549010610200 D2549010610400
D2549020302000 D2549020401400 D2549020407600 D2549020411000 D2549020411600
D2549020413200 D2549020413400 D2549020413800 D2549020414000 D2549020500000
D2549020500200 D2549020500400 D2549020500600 D2549020500800 D2549020501000
D2549020501200 D2549020501400 D2549020501600 D2549020501800 D2549020502000
D2549020502200 D2549020502400 D2549020502600 D2549020502800 D2549020503000
D2549020503200 D2549020503400 D2549020503600 D2549020503800 D2549020504000
D2549020504200 D2549020504400 D2549020504600 D2549020505000 D2549020505200
D2549020505400 D2549020505600 D2549020505800 D2549020506000 D2549020506200
D2549020506400 D2549020506600 D2549020506800 D2549020507000 D2549020507200
D2549020507400 D2549020507600 D2549020507800 D2549020508000 D2549020508200
D2549020508400 D2549020508600 D2549020508800 D2549020509000 D2549020509200
D2549020509600 D2549020509800 D2549020510000 D2549020510400 D2549020510600
D2549020510800 D2549020511000 D2549020511200 D2549020511600 D2549020511800
D2549020512000 D2549020512200 D2549020512400 D2549020512600 D2549020512800
D2549020513000 D2549020513400 D2549020513600 D2549020514000 D2549020514200
D2549020514400 D2549020514600 D2549020514800 D2549020600000 D2549020600200
D2549020600400 D2549020600800 D2549020601000 D2549020601200 D2549020601400
D2549020601600 D2549020601800 D2549020602000 D2549020602200 D2549020602400
D2549020602600 D2549020602800 D2549020603000 D2549020603200 D2549020603400
D2549020603600 D2549020603800 D2549020604000 D2549020604200 D2549020604400
D2549020604600 D2549020604800 D2549020605000 D2549020605200 D2549020605400

D2549020605600 D2549020605800 D2549020606000 D2549020606400 D2549020606600
D2549020606800 D2549020607000 D2549020607200 D2549020607400 D2549020607600
D2549020607800 D2549020608200 D2549020608400 D2549020608600 D2549020608800
D2549020609000 D2549020609200 D2549020609400 D2549020609600 D2549020609800
D2549020610000 D2549020610200 D2549020610400 D2549020610600 D2549020610800
D2549020611000 D2549020611200 D2549020611400 D2549020611600 D2549020611800
D2549020612000 D2549020612200 D2549020612400 D2549020612600 D2549020612800
D2549020613000 D2549020613200 D2549020613600 D2549020613800 D2549020614000
D2549020614400 D2549020614600 D2549020614800 D2549020700000 D2549020700200
D2549020700400 D2549020700600 D2549020700800 D2549020701000 D2549020701200
D2549020701400 D2549020701600 D2549020701800 D2549020702000 D2549020702200
D2549020702400 D2549020702600 D2549020702800 D2549020703200 D2549020703400
D2549020703600 D2549020703800 D2549020704000 D2549020704200 D2549020704400
D2549020704600 D2549020704800 D2549020705000 D2549020705200 D2549020705400
D2549020705600 D2549020705800 D2549020706000 D2549020706200 D2549020706400
D2549020706600 D2549020706800 D2549020707000 D2549020707200 D2549020707400
D2549020707600 D2549020707800 D2549020708000 D2549020708200 D2549020708400
D2549020708600 D2549020708800 D2549020709000 D2549020709200 D2549020709400
D2549020709600 D2549020709800 D2549020710000 D2549020710200 D2549020710400
D2549020710600 D2549020710800 D2549020711000 D2549020711200 D2549020711400
D2549020711600 D2549020712000 D2549020712200 D2549020712400 D2549020712600
D2549020712800 D2549020713000 D2549020713200 D2549020713400 D2549020713600
D2549020713800 D2549020714400 D2549020714600 D2549020800000 D2549020800200
D2549020800400 D2549020800600 D2549020800800 D2549020801000 D2549020801200
D2549020801600 D2549020802000 D2549020802200 D2549020802600 D2549020802800
D2549020803000 D2549020803200 D2549020803400 D2549020803600 D2549020803800
D2549030400000 D2549030400200 D2549030400400 D2549030403800 D2549030500200
D2549030500400 D2549030500600 D2549030500800 D2549030501000 D2549030501200
D2549030501400 D2549030501600 D2549030501800 D2549030502000 D2549030502200
D2549030502400 D2549030502600 D2549030502800 D2549030503000 D2549030503200
D2549030503400 D2549030503600 D2549030503800 D2549030504000 D2549030504200
D2549030504600 D2549030504800 D2549030505200 D2549030505400 D2549030505600
D2549030505800 D2549030506000 D2549030506200 D2549030506400 D2549030506600
D2549030506800 D2549030507000 D2549030507200 D2549030507400 D2549030507600
D2549030507800 D2549030508000 D2549030508200 D2549030508400 D2549030508600
D2549030508800 D2549030509000 D2549030509200 D2549030509400 D2549030509600
D2549030509800 D2549030510000 D2549030510200 D2549030510400 D2549030510600
D2549030510800 D2549030511000 D2549030511200 D2549030511400 D2549030511600
D2549030511800 D2549030512000 D2549030512200 D2549030512400 D2549030512800
D2549030513000 D2549030513200 D2549030513400 D2549030513600 D2549030513800
D2549030514000 D2549030514200 D2549030514400 D2549030514600 D2549030514800
D2549030600000 D2549030600200 D2549030600400 D2549030600600 D2549030600800
D2549030601000 D2549030601200 D2549030601400 D2549030601600 D2549030601800
D2549030602000 D2549030602200 D2549030602400 D2549030602600 D2549030602800
D2549030603000 D2549030603400 D2549030603600 D2549030603800 D2549030604200
D2549030604400 D2549030604600 D2549030604800 D2549030605000 D2549030605200
D2549030605400 D2549030605600 D2549030605800 D2549030606000 D2549030606200

D2549030606400 D2549030606600 D2549030606800 D2549030607000 D2549030607200
D2549030607400 D2549030607600 D2549030607800 D2549030608000 D2549030608200
D2549030608400 D2549030608600 D2549030608800 D2549030609000 D2549030609200
D2549030609800 D2549030610000 D2549030610400 D2549030610600 D2549030611000
D2549030611200 D2549030611400 D2549030611600 D2549030611800 D2549030612000
D2549030612200 D2549030612400 D2549030612800 D2549030613200 D2549030613400
D2549030613800 D2549030614200 D2549030614400 D2549030614600 D2549030614800
D2549030701000 D2549030701600 D2549030702400 D2549030702600 D2549030703400
D2549030704000 D2549040501000 D2549040501400 R225401107-000 R225401107-002
R225401107-004 R225401115-000 R225401115-002 R225401128-000 R225401133-000
R225401134-000 R225401134-002 R225401134-004 R225401134-006 R225401134-008
R225401134-010 R225401134-012 R225401134-016 R225401134-018 R225401134-020
R225401134-022 R225401134-024 R225401134-026 R225401134-028 R225401136-000
R225401136-010 R225401136-016 R225401136-020 R225401136-022 R225401137-000
R225401137-002 R225401137-004 R225401137-006 R225401137-008 R225401137-010
R225401137-012 R225401137-014 R225401137-016 R225401139-000 R225401142-000
R225401142-002 R225401145-000 R225401145-002 R225401145-004 R225401145-006
R225401145-008 R225401145-012 R225401145-014 R225401146-000 R225401146-002
R225401152-000 R225401152-002 R225401152-004 R225401152-006 R225401153-000
R225401159-000 R225401160-000 R225401160-002 R225401168-000 R225401168-002
R225401168-004 R225401168-006 R225401168-014 R225401168-016 R225401168-018
R225401168-020 R225401168-022 R225401168-028 R225401172-000 R225401172-002
R225401172-004 R225401172-006 R225401172-008 R225401172-010 R225401172-012
R225401172-014 R225401172-016 R225401172-018 R225401175-000 R225401175-002
R225401176-000 R225401183-000 R225401183-002 R225401183-008 R225401188-000
R225401188-002 R225401188-004 R225401188-006 R225401192-000 R225401195-000
R225401196-000 R225401196-002 R225401196-004 R225401196-006 R225401196-034
R225401196-036 R225401196-038 R225401196-046 R225401196-048 R225401196-050
R225401196-052 R225401199-002 R225401199-004 R225401199-006 R225401600-000
R225401600-002 R225401600-004 R225401603-000 R225401605-000 R225401605-002
R225401611-008 R225401611-010 R225401613-000 R225401614-000 R225401618-000
R225401618-002 R225401619-000 R225401619-002 R225401625-000 R225401627-000
R225401627-002 R225401627-004 R225401629-000 R225401629-002 R225401673-004
R225401673-006 R225401683-000 R225401691-002 R225401693-000

230. Assembly of the Electrical System of the Cockpit Door Locking

A. General

This task gives you the installation and assembly procedures of the component.

B. Job Set-up Information

(1) Not applicable

C. Procedure

WARNING: **BE CAREFUL WHEN YOU USE SOLVENTS/CLEANING AGENTS, SEALANTS AND OTHER MATERIALS. OBEY THE MATERIAL MANUFACTURER'S INSTRUCTIONS AND THE LOCAL REGULATIONS. MAKE SURE THAT THERE IS A GOOD FLOW OF AIR THROUGH THE WORK AREA. DO NOT BREATHE THE FUMES. DO NOT SMOKE. DO NOT USE THESE MATERIALS NEAR A FLAME, SPARKS OR SOURCES OF HEAT. USE PROTECTIVE CLOTHING, GOGGLES AND GLOVES. IF YOU GET ONE OF THESE MATERIALS ON YOUR SKIN OR IN YOUR EYES, FLUSH IT AWAY WITH A FLOW OF CLEAN WATER. IF YOU GET ONE OF THESE MATERIALS IN YOUR MOUTH, GET IMMEDIATE MEDICAL AID. IN GENERAL, THESE MATERIALS ARE POISONOUS, FLAMMABLE AND SKIN IRRITANTS.**

CAUTION: **DO ALL THE WORK ON A CLEAN, SOFT SURFACE TO PREVENT DAMAGE TO THE COMPONENTS.**

CAUTION: **MAKE SURE THAT ALL THE PARTS ARE CLEAN BEFORE YOU ASSEMBLE THEM.**

SUB TASK 25-41-51-440-133-A01

D2549010405000 D2549010405800 D2549010407000 D2549020302000 D2549020401400 D2549020407600 D2549020411000 D2549020411600 D2549020413200 D2549020413400 D2549020413800 D2549020414000 D2549030701000 D2549030701600 D2549030702400 D2549030702600 D2549030703400 D2549030704000 D2549040501000 D2549040501400 R225401627-000 R225401627-002 R225401627-004 R225401673-004 R225401673-006 R225401683-000 R225401691-002

1. Assembly of the Electrical System of the Cockpit Door Locking (31C-1)

   (a) Attach the center electric strike 31C-270, the sheets 31C-210, 31C-220, the protective sleeve 31C-230, the grommet 31C-260 and the dead bolt assembly 31C-280 with the screws 31C-240, 31C-250.

   NOTE: **For further instructions, see CMMV 25-20-22_80477 (center electric strike).**

   (b) Attach the electric strikes 31C-200, the sheets 31C-210, 31C-220, the protective sleeves 31C-230 and the grommets 31C-260 with the screws 31C-240, 31C-250.

   NOTE: **For further instructions, see CMMV 25-20-22_80477 (electric strike).**

   (c) Attach the clamp 31C-160 with the screw 31C-170 and the washer 31C-180.

   (d) Attach the clamp 31C-150 with the screw 31C-170 and the washer 31C-180.

(e) Attach the spring sheets 31C-190.

(f) Install and assemble the cable harness assembly 31C-010 as follows:

1 Attach the cable ties 31C-040, the receptacle connector 31C-050 and the backshell 31C-060 with the coupling screws 31C-070.

2 Attach the cable ties 31C-040.

3 Attach the plug connector 31C-020 and the connector backshell 31C-030.

SUB TASK 25-41-51-440-133-B01

D2547161903000 D2549010500000 D2549010500400 D2549010500600
D2549010500800 D2549010501000 D2549010501200 D2549010501400
D2549010501600 D2549010501800 D2549010502000 D2549010502200
D2549010502400 D2549010502600 D2549010502800 D2549010503200
D2549010503400 D2549010503600 D2549010503800 D2549010504200
D2549010504400 D2549010504600 D2549010504800 D2549010505000
D2549010505200 D2549010505400 D2549010505600 D2549010505800
D2549010506000 D2549010506200 D2549010506400 D2549010506800
D2549010507000 D2549010507200 D2549010507400 D2549010507600
D2549010507800 D2549010508000 D2549010508200 D2549010508400
D2549010508600 D2549010508800 D2549010509000 D2549010509200
D2549010509400 D2549010509600 D2549010509800 D2549010510000
D2549010510200 D2549010510400 D2549010510600 D2549010510800
D2549010511000 D2549010511200 D2549010511400 D2549010511600
D2549010511800 D2549010512000 D2549010512200 D2549010512400
D2549010512600 D2549010513000 D2549010513200 D2549010513400
D2549010513600 D2549010513800 D2549010514000 D2549010514200
D2549010514400 D2549010514600 D2549010514800 D2549010600000
D2549010600200 D2549010600400 D2549010600600 D2549010600800
D2549010601000 D2549010601200 D2549010601400 D2549010601600
D2549010601800 D2549010602000 D2549010602200 D2549010602400
D2549010602600 D2549010602800 D2549010603000 D2549010603200
D2549010603400 D2549010603600 D2549010603800 D2549010604000
D2549010604200 D2549010604400 D2549010604600 D2549010604800
D2549010605000 D2549010605200 D2549010605600 D2549010605800
D2549010606000 D2549010606200 D2549010606400 D2549010606600
D2549010606800 D2549010607000 D2549010607200 D2549010607400
D2549010607600 D2549010607800 D2549010608200 D2549010608400
D2549010608600 D2549010608800 D2549010609000 D2549010609200
D2549010609400 D2549010609600 D2549010609800 D2549010610000
D2549010610200 D2549010610400 D2549020500000 D2549020500200
D2549020500400 D2549020500600 D2549020500800 D2549020501000
D2549020501200 D2549020501400 D2549020501600 D2549020501800
D2549020502000 D2549020502200 D2549020502400 D2549020502600
D2549020502800 D2549020503000 D2549020503200 D2549020503400

D2549020503600 D2549020503800 D2549020504000 D2549020504200
D2549020504400 D2549020504600 D2549020505000 D2549020505200
D2549020505400 D2549020505600 D2549020505800 D2549020506000
D2549020506200 D2549020506400 D2549020506600 D2549020506800
D2549020507000 D2549020507200 D2549020507400 D2549020507600
D2549020507800 D2549020508000 D2549020508200 D2549020508400
D2549020508600 D2549020508800 D2549020509000 D2549020509200
D2549020509600 D2549020509800 D2549020510000 D2549020510400
D2549020510600 D2549020510800 D2549020511000 D2549020511200
D2549020511600 D2549020511800 D2549020512000 D2549020512200
D2549020512400 D2549020512600 D2549020512800 D2549020513000
D2549020513400 D2549020513600 D2549020514000 D2549020514200
D2549020514400 D2549020514600 D2549020514800 D2549020600000
D2549020600200 D2549020600400 D2549020600800 D2549020601000
D2549020601200 D2549020601400 D2549020601600 D2549020601800
D2549020602000 D2549020602200 D2549020602400 D2549020602600
D2549020602800 D2549020603000 D2549020603200 D2549020603400
D2549020603600 D2549020603800 D2549020604000 D2549020604200
D2549020604400 D2549020604600 D2549020604800 D2549020605000
D2549020605200 D2549020605400 D2549020605600 D2549020605800
D2549020606000 D2549020606400 D2549020606600 D2549020606800
D2549020607000 D2549020607200 D2549020607400 D2549020607600
D2549020607800 D2549020608200 D2549020608400 D2549020608600
D2549020608800 D2549020609000 D2549020609200 D2549020609400
D2549020609600 D2549020609800 D2549020610000 D2549020610200
D2549020610400 D2549020610600 D2549020610800 D2549020611000
D2549020611200 D2549020611400 D2549020611600 D2549020611800
D2549020612000 D2549020612200 D2549020612400 D2549020612600
D2549020612800 D2549020613000 D2549020613200 D2549020613600
D2549020613800 D2549020614000 D2549020614400 D2549020614600
D2549020614800 D2549020700000 D2549020700200 D2549020700400
D2549020700600 D2549020700800 D2549020701000 D2549020701200
D2549020701400 D2549020701600 D2549020701800 D2549020702000
D2549020702200 D2549020702400 D2549020702600 D2549020702800
D2549020703200 D2549020703400 D2549020703600 D2549020703800
D2549020704000 D2549020704200 D2549020704400 D2549020704600
D2549020704800 D2549020705000 D2549020705200 D2549020705400
D2549020705600 D2549020705800 D2549020706000 D2549020706200
D2549020706400 D2549020706600 D2549020706800 D2549020707000
D2549020707200 D2549020707400 D2549020707600 D2549020707800
D2549020708000 D2549020708200 D2549020708400 D2549020708600
D2549020708800 D2549020709000 D2549020709200 D2549020709400
D2549020709600 D2549020709800 D2549020710000 D2549020710200
D2549020710400 D2549020710600 D2549020710800 D2549020711000
D2549020711200 D2549020711400 D2549020711600 D2549020712000
D2549020712200 D2549020712400 D2549020712600 D2549020712800
D2549020713000 D2549020713200 D2549020713400 D2549020713600

D2549020713800 D2549020714400 D2549020714600 D2549020800000
D2549020800200 D2549020800400 D2549020800600 D2549020800800
D2549020801000 D2549020801200 D2549020801600 D2549020802000
D2549020802200 D2549020802600 D2549020802800 D2549020803000
D2549020803200 D2549020803400 D2549020803600 D2549020803800
D2549030400000 D2549030400200 D2549030400400 D2549030403800
D2549030500200 D2549030500400 D2549030500600 D2549030500800
D2549030501000 D2549030501200 D2549030501400 D2549030501600
D2549030501800 D2549030502000 D2549030502200 D2549030502400
D2549030502600 D2549030502800 D2549030503000 D2549030503200
D2549030503400 D2549030503600 D2549030503800 D2549030504000
D2549030504200 D2549030504600 D2549030504800 D2549030505200
D2549030505400 D2549030505600 D2549030505800 D2549030506000
D2549030506200 D2549030506400 D2549030506600 D2549030506800
D2549030507000 D2549030507200 D2549030507400 D2549030507600
D2549030507800 D2549030508000 D2549030508200 D2549030508400
D2549030508600 D2549030508800 D2549030509000 D2549030509200
D2549030509400 D2549030509600 D2549030509800 D2549030510000
D2549030510200 D2549030510400 D2549030510600 D2549030510800
D2549030511000 D2549030511200 D2549030511400 D2549030511600
D2549030511800 D2549030512000 D2549030512200 D2549030512400
D2549030512800 D2549030513000 D2549030513200 D2549030513400
D2549030513600 D2549030513800 D2549030514000 D2549030514200
D2549030514400 D2549030514600 D2549030514800 D2549030600000
D2549030600200 D2549030600400 D2549030600600 D2549030600800
D2549030601000 D2549030601200 D2549030601400 D2549030601600
D2549030601800 D2549030602000 D2549030602200 D2549030602400
D2549030602600 D2549030602800 D2549030603000 D2549030603400
D2549030603600 D2549030603800 D2549030604200 D2549030604400
D2549030604600 D2549030604800 D2549030605000 D2549030605200
D2549030605400 D2549030605600 D2549030605800 D2549030606000
D2549030606200 D2549030606400 D2549030606600 D2549030606800
D2549030607000 D2549030607200 D2549030607400 D2549030607600
D2549030607800 D2549030608000 D2549030608200 D2549030608400
D2549030608600 D2549030608800 D2549030609000 D2549030609200
D2549030609800 D2549030610000 D2549030610400 D2549030610600
D2549030611000 D2549030611200 D2549030611400 D2549030611600
D2549030611800 D2549030612000 D2549030612200 D2549030612400
D2549030612800 D2549030613200 D2549030613400 D2549030613800
D2549030614200 D2549030614400 D2549030614600 D2549030614800 R225401107-
000 R225401107-002 R225401107-004 R225401115-000 R225401115-002 R225401128-
000 R225401133-000 R225401134-000 R225401134-002 R225401134-004 R225401134-
006 R225401134-008 R225401134-010 R225401134-012 R225401134-016 R225401134-
018 R225401134-020 R225401134-022 R225401134-024 R225401134-026 R225401134-
028 R225401136-000 R225401136-010 R225401136-016 R225401136-020 R225401136-
022 R225401137-000 R225401137-002 R225401137-004 R225401137-006 R225401137-
008 R225401137-010 R225401137-012 R225401137-014 R225401137-016 R225401139-

000 R225401142-000 R225401142-002 R225401145-000 R225401145-002 R225401145-004 R225401145-006 R225401145-008 R225401145-012 R225401145-014 R225401146-000 R225401146-002 R225401152-000 R225401152-002 R225401152-004 R225401152-006 R225401153-000 R225401159-000 R225401160-000 R225401160-002 R225401168-000 R225401168-002 R225401168-004 R225401168-006 R225401168-014 R225401168-016 R225401168-018 R225401168-020 R225401168-022 R225401168-028 R225401172-000 R225401172-002 R225401172-004 R225401172-006 R225401172-008 R225401172-010 R225401172-012 R225401172-014 R225401172-016 R225401172-018 R225401175-000 R225401175-002 R225401176-000 R225401183-000 R225401183-002 R225401183-008 R225401188-000 R225401188-002 R225401188-004 R225401188-006 R225401192-000 R225401195-000 R225401196-000 R225401196-002 R225401196-004 R225401196-006 R225401196-034 R225401196-036 R225401196-038 R225401196-046 R225401196-048 R225401196-050 R225401196-052 R225401199-002 R225401199-004 R225401199-006 R225401600-000 R225401600-002 R225401600-004 R225401603-000 R225401605-000 R225401605-002 R225401611-008 R225401611-010 R225401613-000 R225401614-000 R225401618-000 R225401618-002 R225401619-000 R225401619-002 R225401625-000 R225401629-000 R225401629-002 R225401693-000

2. Assembly of the Electrical System of the Cockpit Door Locking

(a) Not applicable.

TASK 25-41-51-400-823-E01
D2549020504800

231. Assembly of the Electrical System of the Cockpit Door Locking

A. General

- Not applicable

B. Procedure

SUB TASK 25-41-51-400-082-A01
1. Assembly of the Electrical System of the Cockpit Door Locking

(a) Not applicable.

TASK 25-41-51-400-824-A01
D2549010403200 D2549010404600 D2549010404800 D2549010500000 D2549010500800 D2549010501200 D2549010610600 D2549020300400 D2549020301000 D2549020302000 D2549020401400 D2549020401600 D2549020402000 D2549020402400 D2549020406800 D2549020408200 D2549020408800 D2549020409200 D2549020412800 D2549020413000 D2549020601200 D2549020804400 D2549030410600 D2549030410800 D2549030411600 D2549030411800 D2549030412200 D2549030414200 D2549030414800 D2549030703600 D2549030704200 R225401183-004 R225401183-006 R225401602-000 R225401624-000 R225401627-000 R225401627-002 R225401646-002 R225401685-000 R225401685-002 R225401811-000

232. Installation of the Housing

A. General

This task gives you the installation and assembly procedures of the component.

B. Job Set-up Information

(1) Not applicable

C. Procedure

WARNING: BE CAREFUL WHEN YOU USE SOLVENTS/CLEANING AGENTS, SEALANTS AND OTHER MATERIALS. OBEY THE MATERIAL MANUFACTURER'S INSTRUCTIONS AND THE LOCAL REGULATIONS. MAKE SURE THAT THERE IS A GOOD FLOW OF AIR THROUGH THE WORK AREA. DO NOT BREATHE THE FUMES. DO NOT SMOKE. DO NOT USE THESE MATERIALS NEAR A FLAME, SPARKS OR SOURCES OF HEAT. USE PROTECTIVE CLOTHING, GOGGLES AND GLOVES. IF YOU GET ONE OF THESE MATERIALS ON YOUR SKIN OR IN YOUR EYES, FLUSH IT AWAY WITH A FLOW OF CLEAN WATER. IF YOU GET ONE OF THESE MATERIALS IN YOUR MOUTH, GET IMMEDIATE MEDICAL AID. IN GENERAL, THESE MATERIALS ARE POISONOUS, FLAMMABLE AND SKIN IRRITANTS.

CAUTION: DO ALL THE WORK ON A CLEAN, SOFT SURFACE TO PREVENT DAMAGE TO THE COMPONENTS.

CAUTION: MAKE SURE THAT ALL THE PARTS ARE CLEAN BEFORE YOU ASSEMBLE THEM.

SUB TASK 25-41-51-410-085-A01
D2549010403200 D2549010404600 D2549010404800 D2549010610600 D2549020300400 D2549020301000 D2549020401600 D2549020402000 D2549020402400 D2549020406800 D2549020408800 D2549020409200 D2549020412800 D2549020413000 D2549020804400 D2549030410600

D2549030410800 D2549030411600 D2549030411800 D2549030412200 D2549030414200 D2549030414800 D2549030703600 D2549030704200 R225401183-004 R225401183-006 R225401602-000 R225401624-000 R225401646-002 R225401685-000 R225401685-002 R225401811-000

1. Installation of the Housing (07Z-1)

   (a) Attach the fittings 07Z-050 with the screws 07Z-060.

   (b) Attach the decor covers 07Z-260 with the screws 07Z-270 to the housing assembly 07Z-010.

   (c) Attach the screws 07Z-190 to the housing assembly 07Z-010.

   (d) Attach the glass mirror 07Z-170 to the screws 07Z-190.

   (e) Attach the stud 07Z-180 to the housing assembly 07Z-010.

   (f) Attach the housing assembly 07Z-010 with the screws 07Z-130, 07Z-140, 07Z-240 and the washers 07Z-150, 07Z-250 to the lavatory structure.

SUB TASK 25-41-51-410-085-B01
D2549010500000 D2549010500800 D2549010501200 D2549020302000 D2549020401400 D2549020601200 R225401627-000 R225401627-002

2. Installation of the Housing (07Z-1)

   (a) Attach the fittings 07Z-050 with the screws 07Z-060.

   (b) Attach the decor covers 07Z-300, 07Z-310 with the screws 07Z-270 to the housing assembly 07Z-010.

   (c) Attach the screws 07Z-190 to the housing assembly 07Z-010.

   (d) Attach the glass mirror 07Z-170 to the screws 07Z-190.

   (e) Attach the stud 07Z-180 to the housing assembly 07Z-010.

   (f) Attach the housing assembly 07Z-010 with the screws 07Z-130, 07Z-140, 07Z-240 and the washers 07Z-150, 07Z-250 to the lavatory structure.

SUB TASK 25-41-51-410-085-C01
D2549020408200

3. Installation of the Housing (07Z-1)

(a) Attach the fittings 07Z-050 with the screws 07Z-060.

(b) Attach the cosmetics holder 07Z-280.

NOTE: For further instructions, see CMMV 25-20-08_C5307 (cosmetics holder).

(c) Attach the decor covers 07Z-260 with the screws 07Z-270 to the housing assembly 07Z-010.

(d) Attach the screws 07Z-190 to the housing assembly 07Z-010.

(e) Attach the glass mirror 07Z-170 to the screws 07Z-190.

(f) Attach the stud 07Z-180 to the housing assembly 07Z-010.

(g) Attach the housing assembly 07Z-010 with the screws 07Z-130, 07Z-140, 07Z-240 and the washers 07Z-150, 07Z-160, 07Z-250 to the lavatory structure.

TASK 25-41-51-400-824-B01
D2549010402400 D2549010403800 D2549010405000 D2549010405200 D2549010405800 D2549010406400 D2549010407000 D2549020409400 D2549020410400 D2549020411200 D2549020411600 D2549020414200 D2549030413400 D2549030414600 D2549030700600 D2549030700800 D2549030704400 D2549030704600 D2549030705600 R225401627-004

233. Installation of the Housing

A. General

This task gives you the installation and assembly procedures of the component.

B. Procedure

WARNING: BE CAREFUL WHEN YOU USE SOLVENTS/CLEANING AGENTS, SEALANTS AND OTHER MATERIALS. OBEY THE MATERIAL MANUFACTURER'S INSTRUCTIONS AND THE LOCAL REGULATIONS. MAKE SURE THAT THERE IS A GOOD FLOW OF AIR THROUGH THE WORK AREA. DO NOT BREATHE THE FUMES. DO NOT SMOKE. DO NOT USE THESE MATERIALS NEAR A FLAME, SPARKS OR SOURCES OF HEAT. USE PROTECTIVE CLOTHING, GOGGLES AND GLOVES. IF YOU GET ONE OF THESE MATERIALS ON YOUR SKIN OR IN YOUR EYES, FLUSH IT AWAY WITH A FLOW OF CLEAN WATER. IF YOU GET ONE OF THESE MATERIALS IN YOUR MOUTH, GET IMMEDIATE MEDICAL AID. IN GENERAL, THESE MATERIALS ARE POISONOUS, FLAMMABLE AND SKIN IRRITANTS.

CAUTION: DO ALL THE WORK ON A CLEAN, SOFT SURFACE TO PREVENT DAMAGE TO THE COMPONENTS.

CAUTION: MAKE SURE THAT ALL THE PARTS ARE CLEAN BEFORE YOU ASSEMBLE THEM.

SUB TASK 25-41-51-400-040-A01
D2549010403800 D2549010405200 D2549020409400 D2549020410400 D2549020411200 D2549020414200 D2549030413400 D2549030414600 D2549030700600 D2549030700800 D2549030704400 D2549030704600 D2549030705600

1. Installation of the Housing (49-1)

(a) Attach the fittings 49-050 with the screws 49-060.

(b) Attach the decor covers 49-260 with the screws 49-270 to the housing assembly 49-010.

(c) Attach the screws 49-190 to the housing assembly 49-010.

(d) Attach the glass mirror 49-170 to the screws 49-190.

(e) Attach the stud 49-180 to the housing assembly 49-010.

(f) Attach the housing assembly 49-010 with the screws 49-130, 49-140, 49-240 and the washers 49-150, 49-160, 49-250 to the lavatory structure.

SUB TASK 25-41-51-400-040-B01
D2549010405000 D2549010405800 D2549010407000 D2549020411600 R225401627-004

2. Installation of the Housing (49-1)

(a) Attach the fittings 49-050 with the screws 49-060.

(b) Attach the decor covers 49-310, 49-320 with the screws 49-270 to the housing assembly 49-010.

(c) Attach the screws 49-190 to the housing assembly 49-010.

(d) Attach the glass mirror 49-170 to the screws 49-190.

(e) Attach the stud 49-180 to the housing assembly 49-010.

(f) Attach the housing assembly 49-010 with the screws 49-130, 49-140, 49-240 and the washers 49-150, 49-160, 49-250 to the lavatory structure.

SUB TASK 25-41-51-400-040-C01
D2549010402400 D2549010406400

3. Installation of the Housing (49-1)

(a) Attach the fittings 49-050 with the screws 49-060.

(b) Attach the vase 49-300 with the screws 49-290 to the housing assembly 49-010.

(c) Attach the perfume holder 49-280 with the screws 49-290 to the housing assembly 49-010.

(d) Attach the decor covers 49-260 with the screws 49-270 to the housing assembly 49-010.

(e) Attach the screws 49-190 to the housing assembly 49-010.

(f) Attach the glass mirror 49-170 to the screws 49-190.

(g) Attach the stud 49-180 to the housing assembly 49-010.

(h) Attach the housing assembly 49-010 with the screws 49-130, 49-140, 49-240 and the washers 49-150, 49-160, 49-250 to the lavatory structure.

TASK 25-41-51-400-824-C01
D2549010401600 D2549010405600 D2549020301600 D2549020411000 D2549020411400 D2549020411800 D2549020412000 D2549020412200 D2549020412400 D2549020413200 D2549020413600 D2549030701000 D2549030701600 D2549030701800 D2549030702000 D2549030702200 D2549030702400 D2549030703200 D2549030703400 D2549030704000 D2549040501400 R225401136-008 R225401136-014 R225401673-006 R225401691-002 R225401808-000 R225401814-000

234. Installation of the Housing

A. General

This task gives you the installation and assembly procedures of the component.

B. Job Set-up Information

(1) Not applicable

C. Procedure

WARNING: BE CAREFUL WHEN YOU USE SOLVENTS/CLEANING AGENTS, SEALANTS AND OTHER MATERIALS. OBEY THE MATERIAL MANUFACTURER'S INSTRUCTIONS AND THE LOCAL REGULATIONS. MAKE SURE THAT THERE IS A GOOD FLOW OF AIR THROUGH THE WORK AREA. DO NOT BREATHE THE FUMES. DO NOT SMOKE. DO NOT USE THESE MATERIALS NEAR A FLAME, SPARKS OR SOURCES OF HEAT. USE PROTECTIVE CLOTHING, GOGGLES AND GLOVES. IF YOU GET ONE OF THESE MATERIALS ON YOUR SKIN OR IN YOUR EYES, FLUSH IT AWAY WITH A FLOW OF CLEAN WATER. IF YOU GET ONE OF THESE MATERIALS IN YOUR MOUTH, GET IMMEDIATE MEDICAL AID. IN GENERAL, THESE MATERIALS ARE POISONOUS, FLAMMABLE AND SKIN IRRITANTS.

CAUTION: DO ALL THE WORK ON A CLEAN, SOFT SURFACE TO PREVENT DAMAGE TO THE COMPONENTS.

CAUTION: MAKE SURE THAT ALL THE PARTS ARE CLEAN BEFORE YOU ASSEMBLE THEM.

SUB TASK 25-41-51-410-086-A01
D2549010405600 D2549020301600 D2549020411800 D2549020412000 D2549020412200 D2549020412400 D2549020413600 D2549030701800 D2549030702200 D2549030703200 R225401136-008 R225401136-014 R225401808-000 R225401814-000

1. Installation of the Housing (49A-1)

(a) Attach the fittings 49A-050 with the screws 49A-060.

(b) Attach the decor covers 49A-260 with the screws 49A-270 to the housing assembly 49A-010.

(c) Attach the screws 49A-190 to the housing assembly 49A-010.

(d) Attach the glass mirror 49A-170 to the screws 49A-190.

(e) Attach the stud 49A-180 to the housing assembly 49A-010.

(f) Attach the housing assembly 49A-010 with the screws 49A-130, 49A-140, 49A-240 and the washers 49A-150, 49A-160, 49A-250 to the lavatory structure.

SUB TASK 25-41-51-410-086-B01
D2549010401600 D2549020411000 D2549020411400 D2549020413200 D2549030701000 D2549030701600 D2549030702400 D2549030703400 D2549030704000 D2549040501400 R225401673-006 R225401691-002

2. Installation of the Housing (49A-1)

(a) Attach the fittings 49A-050 with the screws 49A-060.

(b) Attach the decor covers 49A-280, 49A-290 with the screws 49A-270 to the housing assembly 49A-010.

(c) Attach the screws 49A-190 to the housing assembly 49A-010.

(d) Attach the glass mirror 49A-170 to the screws 49A-190.

(e) Attach the stud 49A-180 to the housing assembly 49A-010.

(f) Attach the housing assembly 49A-010 with the screws 49A-130, 49A-140, 49A-240 and the washers 49A-150, 49A-160, 49A-250 to the lavatory structure.

SUB TASK 25-41-51-410-086-C01
D2549030702000

3. Installation of the Housing (49A-1)

(a) Attach the fittings 49A-050 with the screws 49A-060.

(b) Attach the cosmetics holder 49A-300 with the screws 49A-310 and the washers 49A-320.

NOTE: For further instructions, see CMMV 25-20-08_C5307 (cosmetics holder).

(c) Attach the decor covers 49A-260 with the screws 49A-270 to the housing assembly 49A-010.

(d) Attach the screws 49A-190 to the housing assembly 49A-010.

(e) Attach the glass mirror 49A-170 to the screws 49A-190.

(f) Attach the stud 49A-180 to the housing assembly 49A-010.

(g) Attach the housing assembly 49A-010 with the screws 49A-130, 49A-140, 49A-240 and the washers 49A-150, 49A-160, 49A-250 to the lavatory structure.

TASK 25-41-51-400-824-D01
D2549010402000 D2549010402800 D2549010504800 D2549010613600 D2549010613800 D2549020302800 D2549020410600 D2549020413400 D2549020413800 D2549020414000 D2549020414600 D2549020513200 D2549020707800 D2549020708800 D2549030702600 D2549030702800 D2549030703000 R225401196-024 R225401196-070

235. Installation of the Housing

A. General

This task gives you the installation and assembly procedures of the component.

B. Procedure

WARNING: BE CAREFUL WHEN YOU USE SOLVENTS/CLEANING AGENTS, SEALANTS AND OTHER MATERIALS. OBEY THE MATERIAL MANUFACTURER'S INSTRUCTIONS AND THE LOCAL REGULATIONS. MAKE SURE THAT THERE IS A GOOD FLOW OF AIR THROUGH THE WORK AREA. DO NOT BREATHE THE FUMES. DO NOT SMOKE. DO NOT USE THESE MATERIALS NEAR A FLAME, SPARKS OR SOURCES OF HEAT. USE PROTECTIVE CLOTHING, GOGGLES AND GLOVES. IF YOU GET ONE OF THESE MATERIALS ON YOUR SKIN OR IN YOUR EYES, FLUSH IT AWAY WITH A FLOW OF CLEAN WATER. IF YOU GET ONE OF THESE MATERIALS IN YOUR MOUTH, GET IMMEDIATE MEDICAL AID. IN GENERAL, THESE MATERIALS ARE POISONOUS, FLAMMABLE AND SKIN IRRITANTS.

CAUTION: DO ALL THE WORK ON A CLEAN, SOFT SURFACE TO PREVENT DAMAGE TO THE COMPONENTS.

CAUTION: MAKE SURE THAT ALL THE PARTS ARE CLEAN BEFORE YOU ASSEMBLE THEM.

SUB TASK 25-41-51-400-042-A01
D2549010402000 D2549010402800 D2549010504800 D2549010613600 D2549010613800 D2549020302800 D2549020410600 D2549020414600 D2549020513200 D2549020707800 D2549020708800 D2549030702800 D2549030703000 R225401196-024 R225401196-070

1. Installation of the Housing (49B-1)

(a) Attach the fittings 49B-050 with the screws 49B-060.

(b) Attach the decor covers 49B-290 with the screws 49B-270 to the housing assembly 49B-010.

(c) Attach the screws 49B-190 to the housing assembly 49B-010.

(d) Attach the mirror assembly 49B-170 to the screws 49B-190.

(e) Attach the stud 49B-180 to the housing assembly 49B-010.

(f) Attach the housing assembly 49B-010 with the screws 49B-130, 49B-140, 49B-240 and the washers 49B-150, 49B-160, 49B-250 to the lavatory structure.

SUB TASK 25-41-51-400-042-B01
D2549020413400 D2549020413800 D2549020414000 D2549030702600

2. Installation of the Housing (49B-1)

(a) Attach the fittings 49B-050 with the screws 49B-060.

(b) Attach the decor covers 49B-260, 49B-280 with the screws 49B-270 to the housing assembly 49B-010.

(c) Attach the screws 49B-190 to the housing assembly 49B-010.

(d) Attach the mirror assembly 49B-170 to the screws 49B-190.

(e) Attach the stud 49B-180 to the housing assembly 49B-010.

(f) Attach the housing assembly 49B-010 with the screws 49B-130, 49B-140, 49B-240 and the washers 49B-150, 49B-160, 49B-250 to the lavatory structure.

TASK 25-41-51-400-824-E01

D2547160900200 D2547160900400 D2547161903000 D2549010400000 D2549010400200
D2549010400400 D2549010400600 D2549010400800 D2549010401000 D2549010401400
D2549010401800 D2549010402200 D2549010402600 D2549010403000 D2549010403400
D2549010403600 D2549010404000 D2549010404200 D2549010404400 D2549010405400
D2549010406000 D2549010406200 D2549010406800 D2549010500400 D2549010500600
D2549010501000 D2549010501400 D2549010501600 D2549010501800 D2549010502000
D2549010502200 D2549010502400 D2549010502600 D2549010502800 D2549010503200
D2549010503400 D2549010503600 D2549010503800 D2549010504200 D2549010504400
D2549010504600 D2549010505000 D2549010505200 D2549010505400 D2549010505600
D2549010505800 D2549010506000 D2549010506200 D2549010506400 D2549010506800
D2549010507000 D2549010507200 D2549010507400 D2549010507600 D2549010507800
D2549010508000 D2549010508200 D2549010508400 D2549010508600 D2549010508800
D2549010509000 D2549010509200 D2549010509400 D2549010509600 D2549010509800
D2549010510000 D2549010510200 D2549010510400 D2549010510600 D2549010510800
D2549010511000 D2549010511200 D2549010511400 D2549010511600 D2549010511800
D2549010512000 D2549010512200 D2549010512400 D2549010512600 D2549010513000
D2549010513200 D2549010513400 D2549010513600 D2549010513800 D2549010514000
D2549010514200 D2549010514400 D2549010514600 D2549010514800 D2549010600000
D2549010600200 D2549010600400 D2549010600600 D2549010600800 D2549010601000
D2549010601200 D2549010601400 D2549010601600 D2549010601800 D2549010602000
D2549010602200 D2549010602400 D2549010602600 D2549010602800 D2549010603000
D2549010603200 D2549010603400 D2549010603600 D2549010603800 D2549010604000
D2549010604200 D2549010604400 D2549010604600 D2549010604800 D2549010605000
D2549010605200 D2549010605600 D2549010605800 D2549010606000 D2549010606200
D2549010606400 D2549010606600 D2549010606800 D2549010607000 D2549010607200
D2549010607400 D2549010607600 D2549010607800 D2549010608200 D2549010608400
D2549010608600 D2549010608800 D2549010609000 D2549010609200 D2549010609400
D2549010609600 D2549010609800 D2549010610000 D2549010610200 D2549010610400
D2549010610800 D2549010611000 D2549010611200 D2549010611400 D2549010611600
D2549010611800 D2549010612000 D2549010612200 D2549010612400 D2549010612600
D2549010613000 D2549010613200 D2549010613400 D2549010614200 D2549010614400
D2549010614600 D2549010614800 D2549020300000 D2549020300600 D2549020300800
D2549020301800 D2549020400000 D2549020400200 D2549020400400 D2549020400600
D2549020400800 D2549020401000 D2549020401200 D2549020402200 D2549020402600
D2549020403000 D2549020403200 D2549020403400 D2549020403600 D2549020403800
D2549020404000 D2549020404200 D2549020404400 D2549020404600 D2549020404800
D2549020405000 D2549020405200 D2549020405400 D2549020405600 D2549020405800
D2549020406000 D2549020406200 D2549020406400 D2549020406600 D2549020407000
D2549020407200 D2549020407400 D2549020407600 D2549020407800 D2549020408000
D2549020408600 D2549020409000 D2549020409600 D2549020409800 D2549020410200
D2549020410800 D2549020412600 D2549020414800 D2549020500000 D2549020500200
D2549020500400 D2549020500600 D2549020500800 D2549020501000 D2549020501200
D2549020501400 D2549020501600 D2549020501800 D2549020502000 D2549020502200
D2549020502400 D2549020502600 D2549020502800 D2549020503000 D2549020503200
D2549020503400 D2549020503600 D2549020503800 D2549020504000 D2549020504200
D2549020504400 D2549020504600 D2549020504800 D2549020505000 D2549020505200

D2549020505400 D2549020505600 D2549020505800 D2549020506000 D2549020506200
D2549020506400 D2549020506600 D2549020506800 D2549020507000 D2549020507200
D2549020507400 D2549020507600 D2549020507800 D2549020508000 D2549020508200
D2549020508400 D2549020508600 D2549020508800 D2549020509000 D2549020509200
D2549020509600 D2549020509800 D2549020510000 D2549020510400 D2549020510600
D2549020510800 D2549020511000 D2549020511200 D2549020511600 D2549020511800
D2549020512000 D2549020512200 D2549020512400 D2549020512600 D2549020512800
D2549020513000 D2549020513400 D2549020513600 D2549020513800 D2549020514000
D2549020514200 D2549020514400 D2549020514600 D2549020514800 D2549020600000
D2549020600200 D2549020600400 D2549020600800 D2549020601000 D2549020601400
D2549020601600 D2549020601800 D2549020602000 D2549020602200 D2549020602400
D2549020602600 D2549020602800 D2549020603000 D2549020603200 D2549020603400
D2549020603600 D2549020603800 D2549020604000 D2549020604200 D2549020604400
D2549020604600 D2549020604800 D2549020605000 D2549020605200 D2549020605400
D2549020605600 D2549020605800 D2549020606000 D2549020606400 D2549020606600
D2549020606800 D2549020607000 D2549020607200 D2549020607400 D2549020607600
D2549020607800 D2549020608200 D2549020608400 D2549020608600 D2549020608800
D2549020609000 D2549020609200 D2549020609400 D2549020609600 D2549020609800
D2549020610000 D2549020610200 D2549020610400 D2549020610600 D2549020610800
D2549020611000 D2549020611200 D2549020611400 D2549020611600 D2549020611800
D2549020612000 D2549020612200 D2549020612400 D2549020612600 D2549020612800
D2549020613000 D2549020613200 D2549020613600 D2549020613800 D2549020614000
D2549020614400 D2549020614600 D2549020614800 D2549020700000 D2549020700200
D2549020700400 D2549020700600 D2549020700800 D2549020701000 D2549020701200
D2549020701400 D2549020701600 D2549020701800 D2549020702000 D2549020702200
D2549020702400 D2549020702600 D2549020702800 D2549020703200 D2549020703400
D2549020703600 D2549020703800 D2549020704000 D2549020704200 D2549020704400
D2549020704600 D2549020704800 D2549020705000 D2549020705200 D2549020705400
D2549020705600 D2549020705800 D2549020706000 D2549020706200 D2549020706400
D2549020706600 D2549020706800 D2549020707000 D2549020707200 D2549020707400
D2549020707600 D2549020708000 D2549020708200 D2549020708400 D2549020708600
D2549020709000 D2549020709200 D2549020709400 D2549020709600 D2549020709800
D2549020710000 D2549020710200 D2549020710400 D2549020710600 D2549020710800
D2549020711000 D2549020711200 D2549020711400 D2549020711600 D2549020712000
D2549020712200 D2549020712400 D2549020712600 D2549020712800 D2549020713000
D2549020713200 D2549020713400 D2549020713600 D2549020713800 D2549020714000
D2549020714400 D2549020714600 D2549020800000 D2549020800200 D2549020800400
D2549020800600 D2549020800800 D2549020801000 D2549020801200 D2549020801400
D2549020801600 D2549020801800 D2549020802000 D2549020802200 D2549020802400
D2549020802600 D2549020802800 D2549020803000 D2549020803200 D2549020803400
D2549020803600 D2549020803800 D2549020804000 D2549020804200 D2549020804800
D2549020805000 D2549020805200 D2549020805400 D2549020805600 D2549020805800
D2549020806000 D2549020806200 D2549020806400 D2549020806600 D2549020806800
D2549020807000 D2549020807200 D2549020807400 D2549020807600 D2549020807800
D2549020808200 D2549020808400 D2549020808600 D2549020808800 D2549020809000
D2549020809400 D2549020809600 D2549020809800 D2549020810000 D2549020810200
D2549020810400 D2549020810600 D2549020810800 D2549020811200 D2549020811400

D2549020811600 D2549020811800 D2549020812000 D2549020812200 D2549020812400
D2549020812600 D2549020812800 D2549020813000 D2549020813200 D2549020813400
D2549020813600 D2549020813800 D2549020814000 D2549020814200 D2549020814400
D2549020814600 D2549020814800 D2549030400000 D2549030400200 D2549030400400
D2549030400600 D2549030401000 D2549030401200 D2549030401400 D2549030401600
D2549030401800 D2549030402000 D2549030402200 D2549030402400 D2549030402600
D2549030402800 D2549030403000 D2549030403400 D2549030403600 D2549030403800
D2549030404000 D2549030404200 D2549030404400 D2549030404600 D2549030404800
D2549030405000 D2549030405200 D2549030405400 D2549030405600 D2549030405800
D2549030406000 D2549030406400 D2549030406600 D2549030406800 D2549030407000
D2549030407200 D2549030407400 D2549030407600 D2549030407800 D2549030408000
D2549030408200 D2549030408400 D2549030408600 D2549030409000 D2549030409200
D2549030409400 D2549030409600 D2549030409800 D2549030410000 D2549030410200
D2549030410400 D2549030411200 D2549030411400 D2549030412000 D2549030412400
D2549030412600 D2549030412800 D2549030413000 D2549030413200 D2549030413600
D2549030414000 D2549030414400 D2549030500200 D2549030500400 D2549030500600
D2549030500800 D2549030501000 D2549030501200 D2549030501400 D2549030501600
D2549030501800 D2549030502000 D2549030502200 D2549030502400 D2549030502600
D2549030502800 D2549030503000 D2549030503200 D2549030503400 D2549030503600
D2549030503800 D2549030504000 D2549030504200 D2549030504600 D2549030504800
D2549030505200 D2549030505400 D2549030505600 D2549030505800 D2549030506000
D2549030506200 D2549030506400 D2549030506600 D2549030506800 D2549030507000
D2549030507200 D2549030507400 D2549030507600 D2549030507800 D2549030508000
D2549030508200 D2549030508400 D2549030508600 D2549030508800 D2549030509000
D2549030509200 D2549030509400 D2549030509600 D2549030509800 D2549030510000
D2549030510200 D2549030510400 D2549030510600 D2549030510800 D2549030511000
D2549030511200 D2549030511400 D2549030511600 D2549030511800 D2549030512000
D2549030512200 D2549030512400 D2549030512800 D2549030513000 D2549030513200
D2549030513400 D2549030513600 D2549030513800 D2549030514000 D2549030514200
D2549030514400 D2549030514600 D2549030514800 D2549030600000 D2549030600200
D2549030600400 D2549030600600 D2549030600800 D2549030601000 D2549030601200
D2549030601400 D2549030601600 D2549030601800 D2549030602000 D2549030602200
D2549030602400 D2549030602600 D2549030602800 D2549030603000 D2549030603200
D2549030603400 D2549030603600 D2549030603800 D2549030604200 D2549030604400
D2549030604600 D2549030604800 D2549030605000 D2549030605200 D2549030605400
D2549030605600 D2549030605800 D2549030606000 D2549030606200 D2549030606400
D2549030606600 D2549030606800 D2549030607000 D2549030607200 D2549030607400
D2549030607600 D2549030607800 D2549030608000 D2549030608200 D2549030608400
D2549030608600 D2549030608800 D2549030609000 D2549030609200 D2549030609800
D2549030610000 D2549030610200 D2549030610400 D2549030610600 D2549030611000
D2549030611200 D2549030611400 D2549030611600 D2549030611800 D2549030612000
D2549030612200 D2549030612400 D2549030612600 D2549030612800 D2549030613200
D2549030613400 D2549030613600 D2549030613800 D2549030614000 D2549030614200
D2549030614400 D2549030614600 D2549030614800 D2549030700000 D2549030700200
D2549030700400 D2549030701200 D2549030701400 D2549030703800 D2549030704800
D2549030705200 D2549040500200 D2549040500400 D2549040500600 D2549040500800
D2549040501000 D2549040501200 D2549040501600 D2549040501800 D2549040502000

R225401107-000 R225401107-002 R225401107-004 R225401115-000 R225401115-002
R225401128-000 R225401133-000 R225401134-000 R225401134-002 R225401134-004
R225401134-006 R225401134-008 R225401134-010 R225401134-012 R225401134-014
R225401134-016 R225401134-018 R225401134-020 R225401134-022 R225401134-024
R225401134-026 R225401134-028 R225401134-030 R225401134-032 R225401134-034
R225401134-036 R225401134-038 R225401136-000 R225401136-004 R225401136-006
R225401136-010 R225401136-012 R225401136-016 R225401136-018 R225401136-020
R225401136-022 R225401136-024 R225401137-000 R225401137-002 R225401137-004
R225401137-006 R225401137-008 R225401137-010 R225401137-012 R225401137-014
R225401137-016 R225401139-000 R225401142-000 R225401142-002 R225401145-000
R225401145-002 R225401145-004 R225401145-006 R225401145-008 R225401145-010
R225401145-012 R225401145-014 R225401146-000 R225401146-002 R225401152-000
R225401152-002 R225401152-004 R225401152-006 R225401152-008 R225401152-010
R225401153-000 R225401159-000 R225401160-000 R225401160-002 R225401168-000
R225401168-002 R225401168-004 R225401168-006 R225401168-008 R225401168-010
R225401168-012 R225401168-014 R225401168-016 R225401168-018 R225401168-020
R225401168-022 R225401168-024 R225401168-026 R225401168-028 R225401172-000
R225401172-002 R225401172-004 R225401172-006 R225401172-008 R225401172-010
R225401172-012 R225401172-014 R225401172-016 R225401172-018 R225401175-000
R225401175-002 R225401176-000 R225401183-000 R225401183-002 R225401183-008
R225401188-000 R225401188-002 R225401188-004 R225401188-006 R225401192-000
R225401192-002 R225401195-000 R225401196-000 R225401196-002 R225401196-004
R225401196-006 R225401196-008 R225401196-010 R225401196-012 R225401196-014
R225401196-016 R225401196-018 R225401196-020 R225401196-022 R225401196-034
R225401196-036 R225401196-038 R225401196-040 R225401196-042 R225401196-044
R225401196-046 R225401196-048 R225401196-050 R225401196-052 R225401196-054
R225401196-056 R225401196-058 R225401196-060 R225401196-062 R225401196-064
R225401196-066 R225401196-068 R225401199-000 R225401199-002 R225401199-004
R225401199-006 R225401199-008 R225401199-010 R225401199-012 R225401600-000
R225401600-002 R225401600-004 R225401603-000 R225401605-000 R225401605-002
R225401609-000 R225401611-000 R225401611-006 R225401611-008 R225401611-010
R225401611-012 R225401611-014 R225401611-016 R225401611-018 R225401611-020
R225401613-000 R225401614-000 R225401618-000 R225401618-002 R225401619-000
R225401619-002 R225401622-000 R225401622-002 R225401625-000 R225401629-000
R225401629-002 R225401639-000 R225401639-002 R225401643-000 R225401643-002
R225401643-004 R225401643-006 R225401643-008 R225401646-000 R225401647-000
R225401648-000 R225401648-002 R225401648-004 R225401648-006 R225401648-008
R225401649-000 R225401656-000 R225401656-002 R225401658-000 R225401662-000
R225401662-002 R225401671-000 R225401671-002 R225401673-000 R225401673-002
R225401673-004 R225401675-000 R225401676-000 R225401683-000 R225401688-000
R225401689-004 R225401689-006 R225401691-000 R225401693-000 R225401697-000
R225401697-002 R225401803-000 R225401803-002

236. Installation of the Housing

A. General

This task gives you the installation and assembly procedures of the component.

B. Procedure

WARNING: **BE CAREFUL WHEN YOU USE SOLVENTS/CLEANING AGENTS, SEALANTS AND OTHER MATERIALS. OBEY THE MATERIAL MANUFACTURER'S INSTRUCTIONS AND THE LOCAL REGULATIONS. MAKE SURE THAT THERE IS A GOOD FLOW OF AIR THROUGH THE WORK AREA. DO NOT BREATHE THE FUMES. DO NOT SMOKE. DO NOT USE THESE MATERIALS NEAR A FLAME, SPARKS OR SOURCES OF HEAT. USE PROTECTIVE CLOTHING, GOGGLES AND GLOVES. IF YOU GET ONE OF THESE MATERIALS ON YOUR SKIN OR IN YOUR EYES, FLUSH IT AWAY WITH A FLOW OF CLEAN WATER. IF YOU GET ONE OF THESE MATERIALS IN YOUR MOUTH, GET IMMEDIATE MEDICAL AID. IN GENERAL, THESE MATERIALS ARE POISONOUS, FLAMMABLE AND SKIN IRRITANTS.**

CAUTION: **DO ALL THE WORK ON A CLEAN, SOFT SURFACE TO PREVENT DAMAGE TO THE COMPONENTS.**

CAUTION: **MAKE SURE THAT ALL THE PARTS ARE CLEAN BEFORE YOU ASSEMBLE THEM.**

SUB TASK 25-41-51-400-044-A01
D2549010610000 D2549020407600 D2549020408000 D2549020410200 D2549020603200 D2549020606000 D2549020608800 D2549020706400 D2549020800000 D2549030610200 D2549030701200 R225401683-000

1. Installation of the Housing (49C-1)

   (a) Attach the label 49C-320 and the protecting film 49C-330.

   (b) Attach the fittings 49C-050 with the screws 49C-060.

   (c) Attach the decor covers 49C-260, 49C-280 with the screws 49C-270 to the housing assembly 49C-010.

   (d) Attach the screws 49C-190 to the housing assembly 49C-010.

   (e) Attach the glass mirror 49C-170 to the screws 49C-190.

   (f) Attach the stud 49C-180 to the housing assembly 49C-010.

   (g) Attach the housing assembly 49C-010 with the screws 49C-140 and the washers 49C-160 to the lavatory structure.

(h) Attach the upper fitting assembly 49C-125 as follows:

1 Attach the upper fitting 49C-127 with the screws 49C-130, 49C-240 and the washers 49C-150, 49C-250 to the housing assembly 49C-010.

SUB TASK 25-41-51-400-044-B01

D2547160900200 D2547160900400 D2547161903000 D2549010400000
D2549010400200 D2549010400400 D2549010400600 D2549010400800
D2549010401000 D2549010401400 D2549010401800 D2549010402200
D2549010402600 D2549010403000 D2549010403400 D2549010403600
D2549010404000 D2549010404200 D2549010404400 D2549010405400
D2549010406000 D2549010406200 D2549010406800 D2549010500400
D2549010500600 D2549010501000 D2549010501400 D2549010501600
D2549010501800 D2549010502000 D2549010502200 D2549010502400
D2549010502600 D2549010502800 D2549010503200 D2549010503400
D2549010503600 D2549010503800 D2549010504200 D2549010504400
D2549010504600 D2549010505000 D2549010505200 D2549010505400
D2549010505600 D2549010505800 D2549010506000 D2549010506200
D2549010506400 D2549010506800 D2549010507000 D2549010507200
D2549010507400 D2549010507600 D2549010507800 D2549010508000
D2549010508200 D2549010508400 D2549010508600 D2549010508800
D2549010509000 D2549010509200 D2549010509400 D2549010509600
D2549010509800 D2549010510000 D2549010510200 D2549010510400
D2549010510600 D2549010510800 D2549010511000 D2549010511200
D2549010511400 D2549010511600 D2549010511800 D2549010512000
D2549010512200 D2549010512400 D2549010512600 D2549010513000
D2549010513200 D2549010513400 D2549010513600 D2549010513800
D2549010514000 D2549010514200 D2549010514400 D2549010514600
D2549010514800 D2549010600000 D2549010600200 D2549010600400
D2549010600600 D2549010600800 D2549010601000 D2549010601200
D2549010601400 D2549010601600 D2549010601800 D2549010602000
D2549010602200 D2549010602400 D2549010602600 D2549010602800
D2549010603000 D2549010603200 D2549010603400 D2549010603600
D2549010603800 D2549010604000 D2549010604200 D2549010604400
D2549010604600 D2549010604800 D2549010605000 D2549010605200
D2549010605600 D2549010605800 D2549010606000 D2549010606200
D2549010606400 D2549010606600 D2549010606800 D2549010607000
D2549010607200 D2549010607400 D2549010607600 D2549010607800
D2549010608200 D2549010608400 D2549010608600 D2549010608800
D2549010609000 D2549010609200 D2549010609400 D2549010609600
D2549010609800 D2549010610200 D2549010610400 D2549010610800
D2549010611000 D2549010611200 D2549010611400 D2549010611600
D2549010611800 D2549010612000 D2549010612200 D2549010612400
D2549010612600 D2549010613000 D2549010613200 D2549010613400
D2549010614200 D2549010614400 D2549010614600 D2549010614800
D2549020300000 D2549020300600 D2549020300800 D2549020301800
D2549020400000 D2549020400200 D2549020400400 D2549020400600

D2549020400800 D2549020401000 D2549020401200 D2549020402200
D2549020402600 D2549020403000 D2549020403200 D2549020403400
D2549020403600 D2549020403800 D2549020404000 D2549020404200
D2549020404400 D2549020404600 D2549020404800 D2549020405000
D2549020405200 D2549020405400 D2549020405600 D2549020405800
D2549020406000 D2549020406200 D2549020406400 D2549020406600
D2549020407000 D2549020407200 D2549020407400 D2549020407800
D2549020408600 D2549020409000 D2549020409600 D2549020409800
D2549020410800 D2549020412600 D2549020414800 D2549020500000
D2549020500200 D2549020500400 D2549020500600 D2549020500800
D2549020501000 D2549020501200 D2549020501400 D2549020501600
D2549020501800 D2549020502000 D2549020502200 D2549020502400
D2549020502600 D2549020502800 D2549020503000 D2549020503200
D2549020503400 D2549020503600 D2549020503800 D2549020504000
D2549020504200 D2549020504400 D2549020504600 D2549020504800
D2549020505000 D2549020505200 D2549020505400 D2549020505600
D2549020505800 D2549020506000 D2549020506200 D2549020506400
D2549020506600 D2549020506800 D2549020507000 D2549020507200
D2549020507400 D2549020507600 D2549020507800 D2549020508000
D2549020508200 D2549020508400 D2549020508600 D2549020508800
D2549020509000 D2549020509200 D2549020509600 D2549020509800
D2549020510000 D2549020510400 D2549020510600 D2549020510800
D2549020511000 D2549020511200 D2549020511600 D2549020511800
D2549020512000 D2549020512200 D2549020512400 D2549020512600
D2549020512800 D2549020513000 D2549020513400 D2549020513600
D2549020513800 D2549020514000 D2549020514200 D2549020514400
D2549020514600 D2549020514800 D2549020600000 D2549020600200
D2549020600400 D2549020600800 D2549020601000 D2549020601400
D2549020601600 D2549020601800 D2549020602000 D2549020602200
D2549020602400 D2549020602600 D2549020602800 D2549020603000
D2549020603400 D2549020603600 D2549020603800 D2549020604000
D2549020604200 D2549020604400 D2549020604600 D2549020604800
D2549020605000 D2549020605200 D2549020605400 D2549020605600
D2549020605800 D2549020606400 D2549020606600 D2549020606800
D2549020607000 D2549020607200 D2549020607400 D2549020607600
D2549020607800 D2549020608200 D2549020608400 D2549020608600
D2549020609000 D2549020609200 D2549020609400 D2549020609600
D2549020609800 D2549020610000 D2549020610200 D2549020610400
D2549020610600 D2549020610800 D2549020611000 D2549020611200
D2549020611400 D2549020611600 D2549020611800 D2549020612000
D2549020612200 D2549020612400 D2549020612600 D2549020612800
D2549020613000 D2549020613200 D2549020613600 D2549020613800
D2549020614000 D2549020614400 D2549020614600 D2549020614800
D2549020700000 D2549020700200 D2549020700400 D2549020700600
D2549020700800 D2549020701000 D2549020701200 D2549020701400
D2549020701600 D2549020701800 D2549020702000 D2549020702200
D2549020702400 D2549020702600 D2549020702800 D2549020703200

D2549020703400 D2549020703600 D2549020703800 D2549020704000
D2549020704200 D2549020704400 D2549020704600 D2549020704800
D2549020705000 D2549020705200 D2549020705400 D2549020705600
D2549020705800 D2549020706000 D2549020706200 D2549020706600
D2549020706800 D2549020707000 D2549020707200 D2549020707400
D2549020707600 D2549020708000 D2549020708200 D2549020708400
D2549020708600 D2549020709000 D2549020709200 D2549020709400
D2549020709600 D2549020709800 D2549020710000 D2549020710200
D2549020710400 D2549020710600 D2549020710800 D2549020711000
D2549020711200 D2549020711400 D2549020711600 D2549020712000
D2549020712200 D2549020712400 D2549020712600 D2549020712800
D2549020713000 D2549020713200 D2549020713400 D2549020713600
D2549020713800 D2549020714000 D2549020714400 D2549020714600
D2549020800200 D2549020800400 D2549020800600 D2549020800800
D2549020801000 D2549020801200 D2549020801400 D2549020801600
D2549020801800 D2549020802000 D2549020802200 D2549020802400
D2549020802600 D2549020802800 D2549020803000 D2549020803200
D2549020803400 D2549020803600 D2549020803800 D2549020804000
D2549020804200 D2549020804800 D2549020805000 D2549020805200
D2549020805400 D2549020805600 D2549020805800 D2549020806000
D2549020806200 D2549020806400 D2549020806600 D2549020806800
D2549020807000 D2549020807200 D2549020807400 D2549020807600
D2549020807800 D2549020808200 D2549020808400 D2549020808600
D2549020808800 D2549020809000 D2549020809400 D2549020809600
D2549020809800 D2549020810000 D2549020810200 D2549020810400
D2549020810600 D2549020810800 D2549020811200 D2549020811400
D2549020811600 D2549020811800 D2549020812000 D2549020812200
D2549020812400 D2549020812600 D2549020812800 D2549020813000
D2549020813200 D2549020813400 D2549020813600 D2549020813800
D2549020814000 D2549020814200 D2549020814400 D2549020814600
D2549020814800 D2549030400000 D2549030400200 D2549030400400
D2549030400600 D2549030401000 D2549030401200 D2549030401400
D2549030401600 D2549030401800 D2549030402000 D2549030402200
D2549030402400 D2549030402600 D2549030402800 D2549030403000
D2549030403400 D2549030403600 D2549030403800 D2549030404000
D2549030404200 D2549030404400 D2549030404600 D2549030404800
D2549030405000 D2549030405200 D2549030405400 D2549030405600
D2549030405800 D2549030406000 D2549030406400 D2549030406600
D2549030406800 D2549030407000 D2549030407200 D2549030407400
D2549030407600 D2549030407800 D2549030408000 D2549030408200
D2549030408400 D2549030408600 D2549030409000 D2549030409200
D2549030409400 D2549030409600 D2549030409800 D2549030410000
D2549030410200 D2549030410400 D2549030411200 D2549030411400
D2549030412000 D2549030412400 D2549030412600 D2549030412800
D2549030413000 D2549030413200 D2549030413600 D2549030414000
D2549030414400 D2549030500200 D2549030500400 D2549030500600
D2549030500800 D2549030501000 D2549030501200 D2549030501400

D2549030501600 D2549030501800 D2549030502000 D2549030502200
D2549030502400 D2549030502600 D2549030502800 D2549030503000
D2549030503200 D2549030503400 D2549030503600 D2549030503800
D2549030504000 D2549030504200 D2549030504600 D2549030504800
D2549030505200 D2549030505400 D2549030505600 D2549030505800
D2549030506000 D2549030506200 D2549030506400 D2549030506600
D2549030506800 D2549030507000 D2549030507200 D2549030507400
D2549030507600 D2549030507800 D2549030508000 D2549030508200
D2549030508400 D2549030508600 D2549030508800 D2549030509000
D2549030509200 D2549030509400 D2549030509600 D2549030509800
D2549030510000 D2549030510200 D2549030510400 D2549030510600
D2549030510800 D2549030511000 D2549030511200 D2549030511400
D2549030511600 D2549030511800 D2549030512000 D2549030512200
D2549030512400 D2549030512800 D2549030513000 D2549030513200
D2549030513400 D2549030513600 D2549030513800 D2549030514000
D2549030514200 D2549030514400 D2549030514600 D2549030514800
D2549030600000 D2549030600200 D2549030600400 D2549030600600
D2549030600800 D2549030601000 D2549030601200 D2549030601400
D2549030601600 D2549030601800 D2549030602000 D2549030602200
D2549030602400 D2549030602600 D2549030602800 D2549030603000
D2549030603200 D2549030603400 D2549030603600 D2549030603800
D2549030604200 D2549030604400 D2549030604600 D2549030604800
D2549030605000 D2549030605200 D2549030605400 D2549030605600
D2549030605800 D2549030606000 D2549030606200 D2549030606400
D2549030606600 D2549030606800 D2549030607000 D2549030607200
D2549030607400 D2549030607600 D2549030607800 D2549030608000
D2549030608200 D2549030608400 D2549030608600 D2549030608800
D2549030609000 D2549030609200 D2549030609800 D2549030610000
D2549030610400 D2549030610600 D2549030611000 D2549030611200
D2549030611400 D2549030611600 D2549030611800 D2549030612000
D2549030612200 D2549030612400 D2549030612600 D2549030612800
D2549030613200 D2549030613400 D2549030613600 D2549030613800
D2549030614000 D2549030614200 D2549030614400 D2549030614600
D2549030614800 D2549030700000 D2549030700200 D2549030700400
D2549030701400 D2549030703800 D2549030704800 D2549030705200
D2549040500200 D2549040500400 D2549040500600 D2549040500800
D2549040501000 D2549040501200 D2549040501600 D2549040501800
D2549040502000 R225401107-000 R225401107-002 R225401107-004 R225401115-000
R225401115-002 R225401128-000 R225401133-000 R225401134-000 R225401134-002
R225401134-004 R225401134-006 R225401134-008 R225401134-010 R225401134-012
R225401134-014 R225401134-016 R225401134-018 R225401134-020 R225401134-022
R225401134-024 R225401134-026 R225401134-028 R225401134-030 R225401134-032
R225401134-034 R225401134-036 R225401134-038 R225401136-000 R225401136-004
R225401136-006 R225401136-010 R225401136-012 R225401136-016 R225401136-018
R225401136-020 R225401136-022 R225401136-024 R225401137-000 R225401137-002
R225401137-004 R225401137-006 R225401137-008 R225401137-010 R225401137-012
R225401137-014 R225401137-016 R225401139-000 R225401142-000 R225401142-002

R225401145-000 R225401145-002 R225401145-004 R225401145-006 R225401145-008 R225401145-010 R225401145-012 R225401145-014 R225401146-000 R225401146-002 R225401152-000 R225401152-002 R225401152-004 R225401152-006 R225401152-008 R225401152-010 R225401153-000 R225401159-000 R225401160-000 R225401160-002 R225401168-000 R225401168-002 R225401168-004 R225401168-006 R225401168-008 R225401168-010 R225401168-012 R225401168-014 R225401168-016 R225401168-018 R225401168-020 R225401168-022 R225401168-024 R225401168-026 R225401168-028 R225401172-000 R225401172-002 R225401172-004 R225401172-006 R225401172-008 R225401172-010 R225401172-012 R225401172-014 R225401172-016 R225401172-018 R225401175-000 R225401175-002 R225401176-000 R225401183-000 R225401183-002 R225401183-008 R225401188-000 R225401188-002 R225401188-004 R225401188-006 R225401192-000 R225401192-002 R225401195-000 R225401196-000 R225401196-002 R225401196-004 R225401196-006 R225401196-008 R225401196-010 R225401196-012 R225401196-014 R225401196-016 R225401196-018 R225401196-020 R225401196-022 R225401196-034 R225401196-036 R225401196-038 R225401196-040 R225401196-042 R225401196-044 R225401196-046 R225401196-048 R225401196-050 R225401196-052 R225401196-054 R225401196-056 R225401196-058 R225401196-060 R225401196-062 R225401196-064 R225401196-066 R225401196-068 R225401199-000 R225401199-002 R225401199-004 R225401199-006 R225401199-008 R225401199-010 R225401199-012 R225401600-000 R225401600-002 R225401600-004 R225401603-000 R225401605-000 R225401605-002 R225401609-000 R225401611-000 R225401611-006 R225401611-008 R225401611-010 R225401611-012 R225401611-014 R225401611-016 R225401611-018 R225401611-020 R225401613-000 R225401614-000 R225401618-000 R225401618-002 R225401619-000 R225401619-002 R225401622-000 R225401622-002 R225401625-000 R225401629-000 R225401629-002 R225401639-000 R225401639-002 R225401643-000 R225401643-002 R225401643-004 R225401643-006 R225401643-008 R225401646-000 R225401647-000 R225401648-000 R225401648-002 R225401648-004 R225401648-006 R225401648-008 R225401649-000 R225401656-000 R225401656-002 R225401658-000 R225401662-000 R225401662-002 R225401671-000 R225401671-002 R225401673-000 R225401673-002 R225401673-004 R225401675-000 R225401676-000 R225401688-000 R225401689-004 R225401689-006 R225401691-000 R225401693-000 R225401697-000 R225401697-002 R225401803-000 R225401803-002

2. Installation of the Housing

(a) Not applicable.

TASK 25-41-51-400-825-A01

D2549010402000 D2549010611000 D2549010612200 D2549010613800 D2549010614200 D2549010614800 D2549020400400 D2549020404200 D2549020405400 D2549020405600 D2549020713000 D2549020714000 D2549020802400 D2549020804000 D2549020804200 D2549020805600 D2549020806200 D2549020806400 D2549020806600 D2549020807000 D2549020807600 D2549020807800 D2549020808400 D2549020808800 D2549020809000 D2549020810000 D2549020810400 D2549020810600 D2549020811400 D2549020812200 D2549020814000 D2549020814400 D2549030401400 D2549030401600 D2549030403000 D2549030404200 D2549030405000 D2549030405600 D2549030405800 D2549030407000 D2549030407400 D2549030407600 R225401192-002 R225401199-000 R225401199-008 R225401199-010 R225401609-000 R225401611-006 R225401611-012 R225401639-000 R225401639-002 R225401643-000 R225401643-002 R225401643-004 R225401646-000 R225401647-000 R225401656-000 R225401656-002

237. Installation of the Side Wall

A. General

This task gives you the installation and assembly procedures of the component.

B. Job Set-up Information

(1) Not applicable

C. Procedure

WARNING: BE CAREFUL WHEN YOU USE SOLVENTS/CLEANING AGENTS, SEALANTS AND OTHER MATERIALS. OBEY THE MATERIAL MANUFACTURER'S INSTRUCTIONS AND THE LOCAL REGULATIONS. MAKE SURE THAT THERE IS A GOOD FLOW OF AIR THROUGH THE WORK AREA. DO NOT BREATHE THE FUMES. DO NOT SMOKE. DO NOT USE THESE MATERIALS NEAR A FLAME, SPARKS OR SOURCES OF HEAT. USE PROTECTIVE CLOTHING, GOGGLES AND GLOVES. IF YOU GET ONE OF THESE MATERIALS ON YOUR SKIN OR IN YOUR EYES, FLUSH IT AWAY WITH A FLOW OF CLEAN WATER. IF YOU GET ONE OF THESE MATERIALS IN YOUR MOUTH, GET IMMEDIATE MEDICAL AID. IN GENERAL, THESE MATERIALS ARE POISONOUS, FLAMMABLE AND SKIN IRRITANTS.

WARNING: KEEP ALL HYDROCARBONS (FUELS, LUBRICANTS, ETC.) AWAY FROM ALL SOURCES OF OXYGEN. OXYGEN BECOMES EXPLOSIVE WHEN IT TOUCHES HYDROCARBONS.

WARNING: TO PREVENT CONTAMINATION OF THE OXYGEN SYSTEM, MAKE SURE THAT YOUR HANDS AND ALL THE TOOLS ARE CLEAN.

CAUTION: DO ALL THE WORK ON A CLEAN, SOFT SURFACE TO PREVENT DAMAGE TO THE COMPONENTS.

CAUTION: **MAKE SURE THAT ALL THE PARTS ARE CLEAN BEFORE YOU ASSEMBLE THEM.**

SUB TASK 25-41-51-410-071-A01
D2549020405400 D2549020713000 D2549020802400 D2549020806400 D2549020806600 D2549020809000 R225401639-000 R225401639-002

1. Installation of the Side Wall (06Z-1)

   (a) Attach the fittings 06Z-020, 06Z-025 with the screws 06Z-030, 06Z-035 to the aft side wall assembly 06Z-010.

   (b) Assemble the post assembly 06Z-210 as follows:

      1 Attach the screws 06Z-220.

   (c) Attach the post assembly 06Z-210 with the screws 06Z-240, 06Z-260, the washers 06Z-190 and the caps 06Z-250.

   (d) Attach the angle 06Z-310 with the screws 06Z-240 and the washers 06Z-190 to the aft side wall assembly 06Z-010.

   (e) Attach the angles 06Z-160 with the screws 06Z-180 and the washers 06Z-190 to the aft side wall assembly 06Z-010.

   (f) Attach the oxygen container assy 06Z-170 with the screws 06Z-180 and the washers 06Z-190 to the angles 06Z-160.

   (g) Attach the ground cable in accordance with the Process and Material Specification PMS 01-04-58 to the oxygen container assy 06Z-170.

   (h) Attach the angle 06Z-130 with the screws 06Z-180 and the washers 06Z-190 to the aft side wall assembly 06Z-010.

   (i) Attach the cover oxygen container assy 06Z-120 with the screws 06Z-140 and the nuts 06Z-150 to the angle 06Z-130.

   (j) Attach the studs 06Z-200 and the washers 06Z-190 to the cover oxygen container assy 06Z-120.

   (k) Attach the coat hook 06Z-340 with the screw 06Z-350.

   (l) Attach the screws 06Z-330 to the aft side wall assembly 06Z-010.

   (m) Attach the toilet seat cover dispenser 06Z-320 to the screws 06Z-330.

(n) Install and assemble the handle assemblies 06Z-270 as follows:

1 Attach the special screws 06Z-280 and the special washers 06Z-300 to the aft side wall assembly 06Z-010.

2 Attach the handle assemblies 06Z-270 to the aft side wall assembly 06Z-010.

3 Attach the security pins 06Z-290 to the handle assemblies 06Z-270.

SUB TASK 25-41-51-410-071-B01
D2549010402000 D2549010612200 D2549010613800 D2549010614800
D2549020404200 D2549020804000 D2549020804200 D2549020814000

2. Installation of the Side Wall (06Z-1)

(a) Attach the fittings 06Z-020, 06Z-025 with the screws 06Z-030, 06Z-035 to the aft side wall assembly 06Z-010.

(b) Assemble the post assembly 06Z-210 as follows:

1 Attach the screws 06Z-220.

(c) Attach the post assembly 06Z-210 with the screws 06Z-240, 06Z-260, the washers 06Z-190 and the caps 06Z-250.

(d) Attach the angle 06Z-310 with the screws 06Z-240 and the washers 06Z-190 to the aft side wall assembly 06Z-010.

(e) Attach the angles 06Z-160 with the screws 06Z-180 and the washers 06Z-190 to the aft side wall assembly 06Z-010.

(f) Attach the oxygen container assy 06Z-170 with the screws 06Z-180 and the washers 06Z-190 to the angles 06Z-160.

(g) Attach the ground cable in accordance with the Process and Material Specification PMS 01-04-58 to the oxygen container assy 06Z-170.

(h) Attach the angle 06Z-130 with the screws 06Z-180 and the washers 06Z-190 to the aft side wall assembly 06Z-010.

(i) Attach the cover oxygen container assy 06Z-120 with the screws 06Z-140 and the nuts 06Z-150 to the angle 06Z-130.

(j) Attach the studs 06Z-200 and the washers 06Z-190 to the cover oxygen container assy 06Z-120.

(k) Attach the screws 06Z-330 to the aft side wall assembly 06Z-010.

(l) Attach the toilet seat cover dispenser 06Z-320 to the screws 06Z-330.

(m) Install and assemble the handle assemblies 06Z-270 as follows:

1 Attach the special screws 06Z-280 and the special washers 06Z-300 to the aft side wall assembly 06Z-010.

2 Attach the handle assemblies 06Z-270 to the aft side wall assembly 06Z-010.

3 Attach the security pins 06Z-290 to the handle assemblies 06Z-270.

SUB TASK 25-41-51-410-071-C01
D2549010611000 D2549010614200 D2549020405600 D2549020714000 D2549020806200 D2549020807000 D2549020808800 D2549020810000 D2549020810600 D2549020811400 D2549020812200 D2549020814400 D2549030405800 R225401609-000 R225401646-000 R225401647-000 R225401656-000 R225401656-002

3. Installation of the Side Wall (06Z-1)

(a) Attach the fittings 06Z-020, 06Z-025 with the screws 06Z-030, 06Z-035 to the aft side wall assembly 06Z-010.

(b) Assemble the post assembly 06Z-210 as follows:

1 Attach the screws 06Z-220.

(c) Attach the post assembly 06Z-210 with the screws 06Z-240, 06Z-260, the washers 06Z-190 and the caps 06Z-250.

(d) Attach the angle 06Z-310 with the screws 06Z-240 and the washers 06Z-190 to the aft side wall assembly 06Z-010.

(e) Attach the angles 06Z-160 with the screws 06Z-180 and the washers 06Z-190 to the aft side wall assembly 06Z-010.

(f) Attach the oxygen container assy 06Z-170 with the screws 06Z-180, 06Z-182 and the washers 06Z-190 to the angles 06Z-160.

(g) Attach the ground cable in accordance with the Process and Material Specification PMS 01-04-58 to the oxygen container assy 06Z-170.

(h) Attach the angle 06Z-130 with the screws 06Z-180 and the washers 06Z-190 to the aft side wall assembly 06Z-010.

(i) Attach the cover oxygen container assy 06Z-120 with the screws 06Z-140 and the nuts 06Z-150 to the angle 06Z-130.

(j) Attach the studs 06Z-200 and the washers 06Z-190 to the cover oxygen container assy 06Z-120.

(k) Attach the screws 06Z-330 to the aft side wall assembly 06Z-010.

(l) Attach the toilet seat cover dispenser 06Z-320 to the screws 06Z-330.

(m) Install and assemble the handle assemblies 06Z-270 as follows:

1 Attach the special screws 06Z-280 and the special washers 06Z-300 to the aft side wall assembly 06Z-010.

2 Attach the handle assemblies 06Z-270 to the aft side wall assembly 06Z-010.

3 Attach the security pins 06Z-290 to the handle assemblies 06Z-270.

SUB TASK 25-41-51-410-071-D01
D2549020805600 D2549020808400 D2549030401400 D2549030401600 D2549030403000 D2549030404200 D2549030405000 D2549030405600 D2549030407000 D2549030407400 D2549030407600 R225401192-002 R225401199-000 R225401199-008 R225401199-010 R225401611-006 R225401611-012

4. Installation of the Side Wall (06Z-1)

(a) Attach the fittings 06Z-020, 06Z-025 with the screws 06Z-030, 06Z-035 to the aft side wall assembly 06Z-010.

(b) Assemble the post assembly 06Z-210 as follows:

1 Attach the screws 06Z-220.

(c) Attach the post assembly 06Z-210 with the screws 06Z-240, 06Z-260, the washers 06Z-190 and the caps 06Z-250.

(d) Attach the angle 06Z-310 with the screws 06Z-240 and the washers 06Z-190 to the aft side wall assembly 06Z-010.

(e) Attach the angles 06Z-160 with the screws 06Z-180 and the washers 06Z-190 to the aft side wall assembly 06Z-010.

(f) Attach the oxygen container assy 06Z-170 with the screws 06Z-180, 06Z-182 and the washers 06Z-190 to the angles 06Z-160.

(g) Attach the ground cable in accordance with the Process and Material Specification PMS 01-04-58 to the oxygen container assy 06Z-170.

(h) Attach the angle 06Z-130 with the screws 06Z-180 and the washers 06Z-190 to the aft side wall assembly 06Z-010.

(i) Attach the cover oxygen container assy 06Z-120 with the screws 06Z-140 and the nuts 06Z-150 to the angle 06Z-130.

(j) Attach the studs 06Z-200 and the washers 06Z-190 to the cover oxygen container assy 06Z-120.

(k) Install and assemble the handle assemblies 06Z-270 as follows:

1 Attach the special screws 06Z-280 and the special washers 06Z-300 to the aft side wall assembly 06Z-010.

2 Attach the handle assemblies 06Z-270 to the aft side wall assembly 06Z-010.

3 Attach the security pins 06Z-290 to the handle assemblies 06Z-270.

SUB TASK 25-41-51-410-071-E01
D2549020400400 D2549020807600 D2549020807800 D2549020810400 R225401643-000 R225401643-002 R225401643-004

5. Installation of the Side Wall (06Z-1)

(a) Attach the bracket 06Z-001 to the aft side wall assembly 06Z-010

(b) Attach the fittings 06Z-020, 06Z-025 with the screws 06Z-030, 06Z-035 to the aft side wall assembly 06Z-010.

(c) Assemble the post assembly 06Z-210 as follows:

1 Attach the screws 06Z-220.

(d) Attach the post assembly 06Z-210 with the screws 06Z-240, 06Z-260, the washers 06Z-190 and the caps 06Z-250.

(e) Attach the angle 06Z-310 with the screws 06Z-240 and the washers 06Z-190 to the aft side wall assembly 06Z-010.

(f) Attach the angles 06Z-160 with the screws 06Z-180 and the washers 06Z-190 to the aft side wall assembly 06Z-010.

(g) Attach the oxygen container assy 06Z-170 with the screws 06Z-180 and the washers 06Z-190 to the angles 06Z-160.

(h) Attach the ground cable in accordance with the Process and Material Specification PMS 01-04-58 to the oxygen container assy 06Z-170.

(i) Attach the angle 06Z-130 with the screws 06Z-180 and the washers 06Z-190 to the aft side wall assembly 06Z-010.

(j) Attach the cover oxygen container assy 06Z-120 with the screws 06Z-140 and the nuts 06Z-150 to the angle 06Z-130.

(k) Attach the studs 06Z-200 and the washers 06Z-190 to the cover oxygen container assy 06Z-120.

(l) Install and assemble the handle assemblies 06Z-270 as follows:

1 Attach the special screws 06Z-280 and the special washers 06Z-300 to the aft side wall assembly 06Z-010.

2 Attach the handle assemblies 06Z-270 to the aft side wall assembly 06Z-010.

3 Attach the security pins 06Z-290 to the handle assemblies 06Z-270.

TASK 25-41-51-400-825-B01

D2549010403000 D2549010610800 D2549010611200 D2549010613000 D2549010613200 D2549020406200 D2549020801400 D2549020804800 D2549020805800 D2549020806000 D2549020808600 D2549020810200 D2549020811200 D2549020811800 D2549020813800 D2549030400600 D2549030401000 D2549030402400 D2549030403600 D2549030404400 D2549030404800 D2549030406400 D2549030406800 R225401145-010 R225401152-008 R225401196-008 R225401196-010 R225401196-012 R225401196-014 R225401196-016 R225401196-040 R225401196-044 R225401196-054 R225401196-056 R225401196-058 R225401196-060 R225401196-062 R225401622-000 R225401622-002 R225401648-000 R225401648-002

238. Installation of the Side Wall

A. General

This task gives you the installation and assembly procedures of the component.

B. Job Set-up Information

(1) Not applicable

C. Procedure

WARNING: BE CAREFUL WHEN YOU USE SOLVENTS/CLEANING AGENTS, SEALANTS AND OTHER MATERIALS. OBEY THE MATERIAL MANUFACTURER'S INSTRUCTIONS AND THE LOCAL REGULATIONS. MAKE SURE THAT THERE IS A GOOD FLOW OF AIR THROUGH THE WORK AREA. DO NOT BREATHE THE FUMES. DO NOT SMOKE. DO NOT USE THESE MATERIALS NEAR A FLAME, SPARKS OR SOURCES OF HEAT. USE PROTECTIVE CLOTHING, GOGGLES AND GLOVES. IF YOU GET ONE OF THESE MATERIALS ON YOUR SKIN OR IN YOUR EYES, FLUSH IT AWAY WITH A FLOW OF CLEAN WATER. IF YOU GET ONE OF THESE MATERIALS IN YOUR MOUTH, GET IMMEDIATE MEDICAL AID. IN GENERAL, THESE MATERIALS ARE POISONOUS, FLAMMABLE AND SKIN IRRITANTS.

WARNING: KEEP ALL HYDROCARBONS (FUELS, LUBRICANTS, ETC.) AWAY FROM ALL SOURCES OF OXYGEN. OXYGEN BECOMES EXPLOSIVE WHEN IT TOUCHES HYDROCARBONS.

WARNING: TO PREVENT CONTAMINATION OF THE OXYGEN SYSTEM, MAKE SURE THAT YOUR HANDS AND ALL THE TOOLS ARE CLEAN.

CAUTION: DO ALL THE WORK ON A CLEAN, SOFT SURFACE TO PREVENT DAMAGE TO THE COMPONENTS.

CAUTION: MAKE SURE THAT ALL THE PARTS ARE CLEAN BEFORE YOU ASSEMBLE THEM.

SUB TASK 25-41-51-410-072-A01
D2549020801400 D2549020804800 R225401622-000 R225401622-002

1. Installation of the Side Wall (48-1)

   (a) Attach the fittings 48-020 with the screws 48-030 to the aft side wall assembly 48-010.

   (b) Assemble the post assembly 48-210 as follows:

      1 Attach the screws 48-220.

   (c) Attach the post assembly 48-210 with the screws 48-240, 48-260, the washers 48-190 and the caps 48-250.

   (d) Attach the angle 48-320 with the screws 48-240 and the washers 48-190 to the aft side wall assembly 48-010.

   (e) Attach the angles 48-160 with the screws 48-180 and the washers 48-190 to the aft side wall assembly 48-010.

   (f) Attach the oxygen container assy 48-170 with the screws 48-180 and the washers 48-190 to the angles 48-160.

   (g) Attach the ground cable in accordance with the Process and Material Specification PMS 01-04-58 to the oxygen container assy 48-170.

   (h) Attach the angle 48-130 with the screws 48-180 and the washers 48-190 to the aft side wall assembly 48-010.

   (i) Attach the cover oxygen container assy 48-120 with the screws 48-140 and the nuts 48-150 to the angle 48-130.

   (j) Attach the studs 48-200 and the washers 48-190 to the cover oxygen container assy 48-120.

   (k) Attach the support 48-310 with the screws 48-240 and the washers 48-190 to the aft side wall assembly 48-010.

   (l) Install and assemble the handle assembly 48-270 as follows:

      1 Attach the special screws 48-280 and the special washers 48-300 to the aft side wall assembly 48-010.

      2 Attach the handle assembly 48-270 to the aft side wall assembly 48-010.

3 Attach the security pins 48-290 to the handle assembly 48-270.

SUB TASK 25-41-51-410-072-B01
D2549020406200 D2549020805800 D2549020806000 D2549020808600 D2549020810200 D2549020811200 D2549020811800 D2549020813800 D2549030400600 D2549030401000 D2549030406800 R225401152-008 R225401196-008 R225401196-010 R225401196-012 R225401196-014 R225401196-016 R225401196-040 R225401196-044 R225401196-054 R225401196-056 R225401196-058 R225401196-060 R225401196-062

2. Installation of the Side Wall (48-1)

(a) If removed, attach the kick strip 48-350 to the aft side wall assembly 48-010.

(b) Remove the bushing 48-305.

(c) Attach the fittings 48-020 with the screws 48-030 to the aft side wall assembly 48-010.

(d) Assemble the post assembly 48-210 as follows:

1 Attach the screws 48-220.

(e) Attach the post assembly 48-210 with the screws 48-240, 48-260, the washers 48-190 and the caps 48-250.

(f) Attach the angle 48-320 with the screws 48-240 and the washers 48-190 to the aft side wall assembly 48-010.

(g) Attach the angles 48-160 with the screws 48-180 and the washers 48-190 to the aft side wall assembly 48-010.

(h) Attach the oxygen container assy 48-170 with the screws 48-180, 48-185 and the washers 48-190, 48-195 to the angles 48-160.

(i) Attach the ground cable in accordance with the Process and Material Specification PMS 01-04-58 to the oxygen container assy 48-170.

(j) Attach the angle 48-130 with the screws 48-180 and the washers 48-190 to the aft side wall assembly 48-010.

(k) Attach the cover oxygen container assy 48-120 with the screws 48-140 and the nuts 48-150 to the angle 48-130.

(l) Attach the studs 48-200 and the washers 48-190 to the cover oxygen container assy 48-120.

(m) Attach the screws 48-340 to the aft side wall assembly 48-010.

(n) Attach the toilet seat cover dispenser 48-330 to the screws 48-340.

(o) Attach the support 48-310 with the screws 48-240 and the washers 48-190 to the aft side wall assembly 48-010.

(p) Install and assemble the handle assembly 48-270 as follows:

1 Attach the special screws 48-280 and the special washers 48-300 to the aft side wall assembly 48-010.

2 Attach the handle assembly 48-270 to the aft side wall assembly 48-010.

3 Attach the security pins 48-290 to the handle assembly 48-270.

SUB TASK 25-41-51-410-072-C01
D2549010403000 D2549010610800 D2549010611200 D2549010613000 D2549010613200 D2549030402400 D2549030403600 D2549030404400 D2549030404800 D2549030406400 R225401145-010 R225401648-000 R225401648-002

3. Installation of the Side Wall (48-1)

(a) Attach the fittings 48-020 with the screws 48-030 to the aft side wall assembly 48-010.

(b) Assemble the post assembly 48-210 as follows:

1 Attach the screws 48-220.

(c) Attach the post assembly 48-210 with the screws 48-240, 48-260, the washers 48-190 and the caps 48-250.

(d) Attach the angle 48-320 with the screws 48-240 and the washers 48-190 to the aft side wall assembly 48-010.

(e) Attach the angles 48-160 with the screws 48-180 and the washers 48-190 to the aft side wall assembly 48-010.

(f) Attach the oxygen container assy 48-170 with the screws 48-180, 48-185 and the washers 48-190 to the angles 48-160.

(g) Attach the ground cable in accordance with the Process and Material Specification PMS 01-04-58 to the oxygen container assy 48-170.

(h) Attach the angle 48-130 with the screws 48-180 and the washers 48-190 to the aft side wall assembly 48-010.

(i) Attach the cover oxygen container assy 48-120 with the screws 48-140 and the nuts 48-150 to the angle 48-130.

(j) Attach the studs 48-200 and the washers 48-190 to the cover oxygen container assy 48-120.

(k) Attach the screws 48-340 to the aft side wall assembly 48-010.

(l) Attach the toilet seat cover dispenser 48-330 to the screws 48-340.

(m) Attach the support 48-310 with the screws 48-240 and the washers 48-190 to the aft side wall assembly 48-010.

(n) Install and assemble the handle assembly 48-270 as follows:

1 Attach the special screws 48-280 and the special washers 48-300 to the aft side wall assembly 48-010.

2 Attach the handle assembly 48-270 to the aft side wall assembly 48-010.

3 Attach the security pins 48-290 to the handle assembly 48-270.

TASK 25-41-51-400-825-C01

D2549010405200 D2549010405600 D2549020411200 D2549020412000 D2549020412200 D2549020800000 D2549030410800 D2549030414200 D2549030606000 D2549030608400 D2549030700800 D2549030701400 D2549030701600 D2549030701800 D2549030704000 D2549030704600 D2549040500200 D2549040500400 D2549040500800 D2549040501000 D2549040501200 D2549040501400 D2549040501600 R225401199-002 R225401611-008 R225401611-020 R225401673-002 R225401673-004 R225401673-006 R225401808-000 R225401814-000

239. Installation of the Side Wall

A. General

This task gives you the installation and assembly procedures of the component.

B. Job Set-up Information

(1) Consumable Materials

REFERENCE	DESIGNATION
08-007	Sealant, High Temperature

Table 7032
Consumable Materials

C. Procedure

WARNING: BE CAREFUL WHEN YOU USE SOLVENTS/CLEANING AGENTS, SEALANTS AND OTHER MATERIALS. OBEY THE MATERIAL MANUFACTURER'S INSTRUCTIONS AND THE LOCAL REGULATIONS. MAKE SURE THAT THERE IS A GOOD FLOW OF AIR THROUGH THE WORK AREA. DO NOT BREATHE THE FUMES. DO NOT SMOKE. DO NOT USE THESE MATERIALS NEAR A FLAME, SPARKS OR SOURCES OF HEAT. USE PROTECTIVE CLOTHING, GOGGLES AND GLOVES. IF YOU GET ONE OF THESE MATERIALS ON YOUR SKIN OR IN YOUR EYES, FLUSH IT AWAY WITH A FLOW OF CLEAN WATER. IF YOU GET ONE OF THESE MATERIALS IN YOUR MOUTH, GET IMMEDIATE MEDICAL AID. IN GENERAL, THESE MATERIALS ARE POISONOUS, FLAMMABLE AND SKIN IRRITANTS.

WARNING: KEEP ALL HYDROCARBONS (FUELS, LUBRICANTS, ETC.) AWAY FROM ALL SOURCES OF OXYGEN. OXYGEN BECOMES EXPLOSIVE WHEN IT TOUCHES HYDROCARBONS.

WARNING: TO PREVENT CONTAMINATION OF THE OXYGEN SYSTEM, MAKE SURE THAT YOUR HANDS AND ALL THE TOOLS ARE CLEAN.

CAUTION: **DO ALL THE WORK ON A CLEAN, SOFT SURFACE TO PREVENT DAMAGE TO THE COMPONENTS.**

CAUTION: **MAKE SURE THAT ALL THE PARTS ARE CLEAN BEFORE YOU ASSEMBLE THEM.**

SUB TASK 25-41-51-410-073-A01
D2549020800000

1. Installation of the Side Wall (48A-1)

   (a) If removed, attach the kick strip 48A-550 to the aft side wall assembly 48A-010.

   (b) Attach the fittings 48A-020 with the screws 48A-030 to the aft side wall assembly 48A-010.

   (c) Assemble the post assembly 48A-250 as follows:

      1 Attach the screws 48A-260.

   (d) Attach the post assembly 48A-250 with the screws 48A-280, 48A-300, the washers 48A-230 and the caps 48A-290.

   (e) Assemble the single door emergency unlocking device assembly 48A-350 as follows:

      WARNING: **BE CAREFUL WHEN YOU USE MATERIAL NO. 08-007 SEALANT, HIGH TEMPERATURE. OBEY THE MATERIAL MANUFACTURER'S INSTRUCTIONS.**

      1 Apply the Material No. 08-007 Sealant, High Temperature to the snap catch 48A-400 and to the pin 48A-390 and attach the emergency unlocking device pivot 48A-380, the snap catch 48A-400 and the pin 48A-390 to the emergency unlocking device housing 48A-360.

      NOTE: **Adjust the snap catch 48A-400 a half turn before stop.**

      WARNING: **BE CAREFUL WHEN YOU USE MATERIAL NO. 08-007 SEALANT, HIGH TEMPERATURE. OBEY THE MATERIAL MANUFACTURER'S INSTRUCTIONS.**

      2 Apply the Material No. 08-007 Sealant, High Temperature to the bolt 48A-410 and attach the emergency unlocking device strike 48A-370 with the bolt 48A-410 to the emergency unlocking device housing 48A-360.

(f) Attach the single door emergency unlocking device assembly 48A-350 and the plates 48A-530 with the screws 48A-421 and the nuts 48A-540 to the post assembly 48A-250.

(g) Attach the angle 48A-310 with the screws 48A-320, 48A-340 and the washers 48A-330.

(h) Attach the angles 48A-200 with the screws 48A-220 and the washers 48A-230 to the aft side wall assembly 48A-010.

(i) Attach the oxygen container assy 48A-210 with the screws 48A-220 and the washers 48A-230 to the angles 48A-200.

(j) Attach the ground cable in accordance with the Process and Material Specification PMS 01-04-58 to the oxygen container assy 48A-210.

(k) Attach the angle 48A-170 with the screws 48A-220 and the washers 48A-230 to the aft side wall assembly 48A-010.

(l) Attach the cover oxygen container assy 48A-160 with the screws 48A-180 and the nuts 48A-190 to the angle 48A-170.

(m) Attach the studs 48A-240 and the washers 48A-230 to the cover oxygen container assy 48A-160.

(n) Install and assemble the handle assemblies 48A-120 as follows:

1 Attach the special screws 48A-130 and the special washers 48A-150 to the aft side wall assembly 48A-010.

2 Attach the handle assemblies 48A-120 to the aft side wall assembly 48A-010.

3 Attach the security pins 48A-140 to the handle assemblies 48A-120.

SUB TASK 25-41-51-410-073-B01
D2549030606000 D2549030608400 R225401199-002 R225401611-008

2. Installation of the Side Wall (48A-1)

(a) Attach the fittings 48A-020 with the screws 48A-030 to the aft side wall assembly 48A-010.

(b) Assemble the post assembly 48A-250 as follows:

1 Attach the screws 48A-260.

(c) Attach the post assembly 48A-250 with the screws 48A-280, 48A-300, the washers 48A-230 and the caps 48A-290.

(d) Attach the angle 48A-310 with the screws 48A-320, 48A-340 and the washers 48A-330.

(e) Attach the angles 48A-200 with the screws 48A-220 and the washers 48A-230 to the aft side wall assembly 48A-010.

(f) Attach the oxygen container assy 48A-210 with the screws 48A-220 and the washers 48A-230 to the angles 48A-200.

(g) Attach the ground cable in accordance with the Process and Material Specification PMS 01-04-58 to the oxygen container assy 48A-210.

(h) Attach the angle 48A-170 with the screws 48A-220 and the washers 48A-230 to the aft side wall assembly 48A-010.

(i) Attach the cover oxygen container assy 48A-160 with the screws 48A-180 and the nuts 48A-190 to the angle 48A-170.

(j) Attach the studs 48A-240 and the washers 48A-230 to the cover oxygen container assy 48A-160.

(k) Install and assemble the handle assemblies 48A-120 as follows:

1 Attach the special screws 48A-130 and the special washers 48A-150 to the aft side wall assembly 48A-010.

2 Attach the handle assemblies 48A-120 to the aft side wall assembly 48A-010.

3 Attach the security pins 48A-140 to the handle assemblies 48A-120.

SUB TASK 25-41-51-410-073-C01
D2549030700800 D2549030704600

3. Installation of the Side Wall (48A-1)

(a) Attach the fittings 48A-023, 48A-025 with the screws 48A-030 to the aft side wall assembly 48A-010.

(b) Assemble the post assembly 48A-250 as follows:

1 Attach the screws 48A-260.

(c) Attach the post assembly 48A-250 with the screws 48A-280, 48A-300, the washers 48A-230 and the caps 48A-290.

(d) Assemble the single door emergency unlocking device assembly 48A-350 as follows:

WARNING: BE CAREFUL WHEN YOU USE MATERIAL NO. 08-007 SEALANT, HIGH TEMPERATURE. OBEY THE MATERIAL MANUFACTURER'S INSTRUCTIONS.

1 Apply the Material No. 08-007 Sealant, High Temperature to the snap catch 48A-400 and to the pin 48A-390 and attach the emergency unlocking device pivot 48A-380, the snap catch 48A-400 and the pin 48A-390 to the emergency unlocking device housing 48A-360.

NOTE: Adjust the snap catch 48A-400 a half turn before stop.

WARNING: BE CAREFUL WHEN YOU USE MATERIAL NO. 08-007 SEALANT, HIGH TEMPERATURE. OBEY THE MATERIAL MANUFACTURER'S INSTRUCTIONS.

2 Apply the Material No. 08-007 Sealant, High Temperature to the bolt 48A-410 and attach the emergency unlocking device strike 48A-370 with the bolt 48A-410 to the emergency unlocking device housing 48A-360.

(e) Attach the single door emergency unlocking device assembly 48A-350 with the screws 48A-420 to the post assembly 48A-250.

(f) Attach the angle 48A-310 with the screws 48A-320, 48A-340 and the washers 48A-330.

(g) Attach the angles 48A-200 with the screws 48A-220 and the washers 48A-230 to the aft side wall assembly 48A-010.

(h) Attach the oxygen container assy 48A-210 with the screws 48A-220 and the washers 48A-230 to the angles 48A-200.

(i) Attach the ground cable in accordance with the Process and Material Specification PMS 01-04-58 to the oxygen container assy 48A-210.

(j) Attach the hose 48A-450 to the oxygen container assy 48A-210.

(k) Attach the hose 48A-450 with the clamps 48A-480, the screws 48A-460 and the washers 48A-470 to the aft side wall assembly 48A-010.

(l) Attach the angle 48A-170 with the screws 48A-220 and the washers 48A-230 to the aft side wall assembly 48A-010.

(m) Attach the cover oxygen container assy 48A-160 with the screws 48A-180 and the nuts 48A-190 to the angle 48A-170.

(n) Attach the studs 48A-240 and the washers 48A-230 to the cover oxygen container assy 48A-160.

(o) Attach the screws 48A-440 to the aft side wall assembly 48A-010.

(p) Attach the toilet seat cover dispenser 48A-430 to the screws 48A-440.

(q) Install and assemble the handle assemblies 48A-120 as follows:

1 Attach the special screws 48A-130 and the special washers 48A-150 to the aft side wall assembly 48A-010.

2 Attach the handle assemblies 48A-120 to the aft side wall assembly 48A-010.

3 Attach the security pins 48A-140 to the handle assemblies 48A-120.

SUB TASK 25-41-51-410-073-D01
D2549020411200

4. Installation of the Side Wall (48A-1)

(a) Attach the fittings 48A-023, 48A-025 with the screws 48A-030 to the aft side wall assembly 48A-010.

(b) Assemble the post assembly 48A-250 as follows:

1 Attach the screws 48A-260.

(c) Attach the post assembly 48A-250 with the screws 48A-280, 48A-300, the washers 48A-230 and the caps 48A-290.

(d) Assemble the single door emergency unlocking device assembly 48A-350 as follows:

WARNING: **BE CAREFUL WHEN YOU USE MATERIAL NO. 08-007 SEALANT, HIGH TEMPERATURE. OBEY THE MATERIAL MANUFACTURER'S INSTRUCTIONS.**

1 Apply the Material No. 08-007 Sealant, High Temperature to the snap catch 48A-400 and to the pin 48A-390 and attach the emergency unlocking device pivot 48A-380, the snap catch 48A-400 and the pin 48A-390 to the emergency unlocking device housing 48A-360.

NOTE: **Adjust the snap catch 48A-400 a half turn before stop.**

WARNING: **BE CAREFUL WHEN YOU USE MATERIAL NO. 08-007 SEALANT, HIGH TEMPERATURE. OBEY THE MATERIAL MANUFACTURER'S INSTRUCTIONS.**

2 Apply the Material No. 08-007 Sealant, High Temperature to the bolt 48A-410 and attach the emergency unlocking device strike 48A-370 with the bolt 48A-410 to the emergency unlocking device housing 48A-360.

(e) Attach the single door emergency unlocking device assembly 48A-350 with the screws 48A-420 to the post assembly 48A-250.

(f) Attach the angle 48A-310 with the screws 48A-320, 48A-340 and the washers 48A-330.

(g) Attach the angles 48A-200 with the screws 48A-220 and the washers 48A-230 to the aft side wall assembly 48A-010.

(h) Attach the oxygen container assy 48A-210 with the screws 48A-220 and the washers 48A-230 to the angles 48A-200.

(i) Attach the ground cable in accordance with the Process and Material Specification PMS 01-04-58 to the oxygen container assy 48A-210.

(j) Attach the angle 48A-170 with the screws 48A-220 and the washers 48A-230 to the aft side wall assembly 48A-010.

(k) Attach the cover oxygen container assy 48A-160 with the screws 48A-180 and the nuts 48A-190 to the angle 48A-170.

(l) Attach the studs 48A-240 and the washers 48A-230 to the cover oxygen container assy 48A-160.

(m) Install and assemble the handle assemblies 48A-490 as follows:

1 Attach the screws 48A-500 and the washers 48A-510 to the aft side wall assembly 48A-010.

2 Attach the handle 48A-495 to the aft side wall assembly 48A-010.

3 Attach the setscrews 48A-520 to the handle 48A-495.

SUB TASK 25-41-51-410-073-E01
D2549020412000 D2549040500800 D2549040501000 D2549040501400 R225401673-002 R225401673-004 R225401673-006

5. Installation of the Side Wall (48A-1)

(a) Attach the fittings 48A-023, 48A-025 with the screws 48A-030 to the aft side wall assembly 48A-010.

(b) Assemble the post assembly 48A-250 as follows:

1 Attach the screws 48A-260.

(c) Attach the post assembly 48A-250 with the screws 48A-280, 48A-300, the washers 48A-230 and the caps 48A-290.

(d) Assemble the single door emergency unlocking device assembly 48A-350 as follows:

WARNING: BE CAREFUL WHEN YOU USE MATERIAL NO. 08-007 SEALANT, HIGH TEMPERATURE. OBEY THE MATERIAL MANUFACTURER'S INSTRUCTIONS.

1 Apply the Material No. 08-007 Sealant, High Temperature to the snap catch 48A-400 and to the pin 48A-390 and attach the emergency unlocking device pivot 48A-380, the snap catch 48A-400 and the pin 48A-390 to the emergency unlocking device housing 48A-360.

NOTE: Adjust the snap catch 48A-400 a half turn before stop.

WARNING: BE CAREFUL WHEN YOU USE MATERIAL NO. 08-007 SEALANT, HIGH TEMPERATURE. OBEY THE MATERIAL MANUFACTURER'S INSTRUCTIONS.

2 Apply the Material No. 08-007 Sealant, High Temperature to the bolt 48A-410 and attach the emergency unlocking device strike 48A-370 with the bolt 48A-410 to the emergency unlocking device housing 48A-360.

(e) Attach the single door emergency unlocking device assembly 48A-350 with the screws 48A-420 to the post assembly 48A-250.

(f) Attach the angle 48A-310 with the screws 48A-320, 48A-340 and the washers 48A-330.

(g) Attach the angles 48A-200 with the screws 48A-220 and the washers 48A-230 to the aft side wall assembly 48A-010.

(h) Attach the oxygen container assy 48A-210 with the screws 48A-220, 48A-225 and the washers 48A-230 to the angles 48A-200.

(i) Attach the ground cable in accordance with the Process and Material Specification PMS 01-04-58 to the oxygen container assy 48A-210.

(j) Attach the angle 48A-170 with the screws 48A-220 and the washers 48A-230 to the aft side wall assembly 48A-010.

(k) Attach the cover oxygen container assy 48A-160 with the screws 48A-180 and the nuts 48A-190 to the angle 48A-170.

(l) Attach the studs 48A-240 and the washers 48A-230 to the cover oxygen container assy 48A-160.

(m) Attach the screws 48A-440 to the aft side wall assembly 48A-010.

(n) Attach the toilet seat cover dispenser 48A-430 to the screws 48A-440.

(o) Install and assemble the handle assemblies 48A-120 as follows:

1 Attach the special screws 48A-130 and the special washers 48A-150 to the aft side wall assembly 48A-010.

2 Attach the handle assemblies 48A-120 to the aft side wall assembly 48A-010.

3 Attach the security pins 48A-140 to the handle assemblies 48A-120.

SUB TASK 25-41-51-410-073-F01
D2549010405200 D2549020412200

6. Installation of the Side Wall (48A-1)

(a) Attach the fittings 48A-023, 48A-025 with the screws 48A-030 to the aft side wall assembly 48A-010.

(b) Assemble the post assembly 48A-250 as follows:

1 Attach the screws 48A-260.

(c) Attach the post assembly 48A-250 with the screws 48A-280, 48A-300, the washers 48A-230 and the caps 48A-290.

(d) Assemble the single door emergency unlocking device assembly 48A-350 as follows:

WARNING: BE CAREFUL WHEN YOU USE MATERIAL NO. 08-007 SEALANT, HIGH TEMPERATURE. OBEY THE MATERIAL MANUFACTURER'S INSTRUCTIONS.

1 Apply the Material No. 08-007 Sealant, High Temperature to the snap catch 48A-400 and to the pin 48A-390 and attach the emergency unlocking device pivot 48A-380, the snap catch 48A-400 and the pin 48A-390 to the emergency unlocking device housing 48A-360.

NOTE: Adjust the snap catch 48A-400 a half turn before stop.

WARNING: BE CAREFUL WHEN YOU USE MATERIAL NO. 08-007 SEALANT, HIGH TEMPERATURE. OBEY THE MATERIAL MANUFACTURER'S INSTRUCTIONS.

2 Apply the Material No. 08-007 Sealant, High Temperature to the bolt 48A-410 and attach the emergency unlocking device strike 48A-370 with the bolt 48A-410 to the emergency unlocking device housing 48A-360.

(e) Attach the single door emergency unlocking device assembly 48A-350 with the screws 48A-420 to the post assembly 48A-250.

(f) Attach the angle 48A-310 with the screws 48A-320, 48A-340 and the washers 48A-330.

(g) Attach the angles 48A-200 with the screws 48A-220 and the washers 48A-230 to the aft side wall assembly 48A-010.

(h) Attach the oxygen container assy 48A-210 with the screws 48A-220 and the washers 48A-230 to the angles 48A-200.

(i) Attach the ground cable in accordance with the Process and Material Specification PMS 01-04-58 to the oxygen container assy 48A-210.

(j) Attach the angle 48A-170 with the screws 48A-220 and the washers 48A-230 to the aft side wall assembly 48A-010.

(k) Attach the cover oxygen container assy 48A-160 with the screws 48A-180 and the nuts 48A-190 to the angle 48A-170.

(l) Attach the studs 48A-240 and the washers 48A-230 to the cover oxygen container assy 48A-160.

(m) Attach the screws 48A-440 to the aft side wall assembly 48A-010.

(n) Attach the toilet seat cover dispenser 48A-430 to the screws 48A-440.

(o) Install and assemble the handle assemblies 48A-120 as follows:

1 Attach the special screws 48A-130 and the special washers 48A-150 to the aft side wall assembly 48A-010.

2 Attach the handle assemblies 48A-120 to the aft side wall assembly 48A-010.

3 Attach the security pins 48A-140 to the handle assemblies 48A-120.

SUB TASK 25-41-51-410-073-G01
D2549010405600 D2549030701800 R225401808-000 R225401814-000

7. Installation of the Side Wall (48A-1)

(a) Attach the fitting 48A-025 with the screws 48A-030 to the aft side wall assembly 48A-010.

(b) Assemble the post assembly 48A-250 as follows:

1 Attach the screws 48A-260.

(c) Attach the post assembly 48A-250 with the screws 48A-280, 48A-300, the washers 48A-230 and the caps 48A-290.

(d) Assemble the single door emergency unlocking device assembly 48A-350 as follows:

WARNING: **BE CAREFUL WHEN YOU USE MATERIAL NO. 08-007 SEALANT, HIGH TEMPERATURE. OBEY THE MATERIAL MANUFACTURER'S INSTRUCTIONS.**

1 Apply the Material No. 08-007 Sealant, High Temperature to the snap catch 48A-400 and to the pin 48A-390 and attach the emergency unlocking device pivot 48A-380, the snap catch 48A-400 and the pin 48A-390 to the emergency unlocking device housing 48A-360.

NOTE: **Adjust the snap catch 48A-400 a half turn before stop.**

WARNING: **BE CAREFUL WHEN YOU USE MATERIAL NO. 08-007 SEALANT, HIGH TEMPERATURE. OBEY THE MATERIAL MANUFACTURER'S INSTRUCTIONS.**

2 Apply the Material No. 08-007 Sealant, High Temperature to the bolt 48A-410 and attach the emergency unlocking device strike 48A-370 with the bolt 48A-410 to the emergency unlocking device housing 48A-360.

(e) Attach the single door emergency unlocking device assembly 48A-350 with the screws 48A-420 to the post assembly 48A-250.

(f) Attach the angle 48A-310 with the screws 48A-320, 48A-340 and the washers 48A-330.

(g) Attach the angles 48A-200 with the screws 48A-220 and the washers 48A-230 to the aft side wall assembly 48A-010.

(h) Attach the oxygen container assy 48A-210 with the screws 48A-220, 48A-225 and the washers 48A-230, 48A-235 to the angles 48A-200.

(i) Attach the ground cable in accordance with the Process and Material Specification PMS 01-04-58 to the oxygen container assy 48A-210.

(j) Attach the angle 48A-170 with the screws 48A-220 and the washers 48A-230 to the aft side wall assembly 48A-010.

(k) Attach the cover oxygen container assy 48A-160 with the screws 48A-180 and the nuts 48A-190 to the angle 48A-170.

(l) Attach the studs 48A-240 and the washers 48A-230 to the cover oxygen container assy 48A-160.

(m) Attach the screws 48A-440 to the aft side wall assembly 48A-010.

(n) Attach the toilet seat cover dispenser 48A-430 to the screws 48A-440.

(o) Install and assemble the handle assemblies 48A-120 as follows:

1 Attach the special screws 48A-130 and the special washers 48A-150 to the aft side wall assembly 48A-010.

2 Attach the handle assemblies 48A-120 to the aft side wall assembly 48A-010.

3 Attach the security pins 48A-140 to the handle assemblies 48A-120.

SUB TASK 25-41-51-410-073-H01
D2549030410800 D2549030414200 D2549030701400 D2549030701600 D2549030704000 D2549040500200 D2549040500400 D2549040501200 D2549040501600 R225401611-020

8. Installation of the Side Wall (48A-1)

(a) Attach the fittings 48A-023, 48A-025 with the screws 48A-030 to the aft side wall assembly 48A-010.

(b) Assemble the post assembly 48A-250 as follows:

1 Attach the screws 48A-260.

(c) Attach the post assembly 48A-250 with the screws 48A-280, 48A-300, the washers 48A-230 and the caps 48A-290.

(d) Assemble the single door emergency unlocking device assembly 48A-350 as follows:

WARNING: BE CAREFUL WHEN YOU USE MATERIAL NO. 08-007 SEALANT, HIGH TEMPERATURE. OBEY THE MATERIAL MANUFACTURER'S INSTRUCTIONS.

1 Apply the Material No. 08-007 Sealant, High Temperature to the snap catch 48A-400 and to the pin 48A-390 and attach the emergency unlocking device pivot 48A-380, the snap catch 48A-400 and the pin 48A-390 to the emergency unlocking device housing 48A-360.

NOTE: Adjust the snap catch 48A-400 a half turn before stop.

WARNING: **BE CAREFUL WHEN YOU USE MATERIAL NO. 08-007 SEALANT, HIGH TEMPERATURE. OBEY THE MATERIAL MANUFACTURER'S INSTRUCTIONS.**

2 Apply the Material No. 08-007 Sealant, High Temperature to the bolt 48A-410 and attach the emergency unlocking device strike 48A-370 with the bolt 48A-410 to the emergency unlocking device housing 48A-360.

(e) Attach the single door emergency unlocking device assembly 48A-350 with the screws 48A-420 to the post assembly 48A-250.

(f) Attach the angle 48A-310 with the screws 48A-320, 48A-340 and the washers 48A-330.

(g) Attach the angles 48A-200 with the screws 48A-220 and the washers 48A-230 to the aft side wall assembly 48A-010.

(h) Attach the oxygen container assy 48A-210 with the screws 48A-220 and the washers 48A-230 to the angles 48A-200.

(i) Attach the ground cable in accordance with the Process and Material Specification PMS 01-04-58 to the oxygen container assy 48A-210.

(j) Attach the angle 48A-170 with the screws 48A-220 and the washers 48A-230 to the aft side wall assembly 48A-010.

(k) Attach the cover oxygen container assy 48A-160 with the screws 48A-180 and the nuts 48A-190 to the angle 48A-170.

(l) Attach the studs 48A-240 and the washers 48A-230 to the cover oxygen container assy 48A-160.

(m) Install and assemble the handle assemblies 48A-120 as follows:

1 Attach the special screws 48A-130 and the special washers 48A-150 to the aft side wall assembly 48A-010.

2 Attach the handle assemblies 48A-120 to the aft side wall assembly 48A-010.

3 Attach the security pins 48A-140 to the handle assemblies 48A-120.

TASK 25-41-51-400-825-D01
D2549010400200 D2549010400400 D2549010400600 D2549010611400 D2549010612400 D2549010612600 D2549010613400 D2549020404400 D2549020405200 D2549020405800 D2549020513800 D2549020801800 D2549020806800 D2549020811600 D2549020812000 D2549020812400 D2549020812800 D2549020813000 D2549020813400 D2549020814600 D2549020814800 D2549030401800 D2549030406000 D2549030408000 D2549030410400 D2549030614000 R225401662-000 R225401662-002

240. Installation of the Side Wall

A. General

This task gives you the installation and assembly procedures of the component.

B. Job Set-up Information
(1) Consumable Materials

REFERENCE	DESIGNATION
08-007	Sealant, High Temperature

Table 7033
Consumable Materials

C. Procedure

WARNING: BE CAREFUL WHEN YOU USE SOLVENTS/CLEANING AGENTS, SEALANTS AND OTHER MATERIALS. OBEY THE MATERIAL MANUFACTURER'S INSTRUCTIONS AND THE LOCAL REGULATIONS. MAKE SURE THAT THERE IS A GOOD FLOW OF AIR THROUGH THE WORK AREA. DO NOT BREATHE THE FUMES. DO NOT SMOKE. DO NOT USE THESE MATERIALS NEAR A FLAME, SPARKS OR SOURCES OF HEAT. USE PROTECTIVE CLOTHING, GOGGLES AND GLOVES. IF YOU GET ONE OF THESE MATERIALS ON YOUR SKIN OR IN YOUR EYES, FLUSH IT AWAY WITH A FLOW OF CLEAN WATER. IF YOU GET ONE OF THESE MATERIALS IN YOUR MOUTH, GET IMMEDIATE MEDICAL AID. IN GENERAL, THESE MATERIALS ARE POISONOUS, FLAMMABLE AND SKIN IRRITANTS.

WARNING: KEEP ALL HYDROCARBONS (FUELS, LUBRICANTS, ETC.) AWAY FROM ALL SOURCES OF OXYGEN. OXYGEN BECOMES EXPLOSIVE WHEN IT TOUCHES HYDROCARBONS.

WARNING: TO PREVENT CONTAMINATION OF THE OXYGEN SYSTEM, MAKE SURE THAT YOUR HANDS AND ALL THE TOOLS ARE CLEAN.

CAUTION: **DO ALL THE WORK ON A CLEAN, SOFT SURFACE TO PREVENT DAMAGE TO THE COMPONENTS.**

CAUTION: **MAKE SURE THAT ALL THE PARTS ARE CLEAN BEFORE YOU ASSEMBLE THEM.**

SUB TASK 25-41-51-410-074-A01
D2549020405800 D2549020813000

1. Installation of the Side Wall (48B-1)

(a) Attach the fittings 48B-020, 48B-030 with the screws 48B-040, 48B-050 to the aft side wall assembly 48B-010.

(b) Assemble the post assembly 48B-260 as follows:

1 Attach the screws 48B-270.

(c) Attach the post assembly 48B-260 with the screws 48B-290, 48B-310, the washers 48B-240 and the caps 48B-300.

(d) Assemble the single door emergency unlocking device assembly 48B-390 as follows:

WARNING: **BE CAREFUL WHEN YOU USE MATERIAL NO. 08-007 SEALANT, HIGH TEMPERATURE. OBEY THE MATERIAL MANUFACTURER'S INSTRUCTIONS.**

1 Apply the Material No. 08-007 Sealant, High Temperature to the snap catch 48B-440 and to the pin 48B-430 and attach the emergency unlocking device pivot 48B-420, the snap catch 48B-440 and the pin 48B-430 to the emergency unlocking device housing 48B-400.

NOTE: **Adjust the snap catch 48B-440 a half turn before stop.**

WARNING: **BE CAREFUL WHEN YOU USE MATERIAL NO. 08-007 SEALANT, HIGH TEMPERATURE. OBEY THE MATERIAL MANUFACTURER'S INSTRUCTIONS.**

2 Apply the Material No. 08-007 Sealant, High Temperature to the bolt 48B-450 and attach the emergency unlocking device strike 48B-410 with the bolt 48B-450 to the emergency unlocking device housing 48B-400.

(e) Attach the single door emergency unlocking device assembly 48B-390 and the plates 48B-460 with the screws 48B-470, the nuts 48B-480 to the post assembly 48B-260.

(f) Attach the angle 48B-340 with the screws 48B-350 and the washers 48B-360.

(g) Attach the angles 48B-210 with the screws 48B-230 and the washers 48B-240 to the aft side wall assembly 48B-010.

(h) Attach the oxygen container assy 48B-220 with the screws 48B-230 and the washers 48B-240 to the angles 48B-210.

(i) Attach the ground cable in accordance with the Process and Material Specification PMS 01-04-58 to the oxygen container assy 48B-220.

(j) Attach the angle 48B-180 with the screws 48B-230 and the washers 48B-240 to the aft side wall assembly 48B-010.

(k) Attach the cover oxygen container assy 48B-170 with the screws 48B-190 and the nuts 48B-200 to the angle 48B-180.

(l) Attach the studs 48B-250 and the washers 48B-240 to the cover oxygen container assy 48B-170.

(m) Install and assemble the handle assemblies 48B-130 as follows:

1 Attach the special screws 48B-140 and the special washers 48B-160 to the aft side wall assembly 48B-010.

2 Attach the handle assemblies 48B-130 to the aft side wall assembly 48B-010.

3 Attach the security pins 48B-150 to the handle assemblies 48B-130.

SUB TASK 25-41-51-410-074-B01
D2549020813400

2. Installation of the Side Wall (48B-1)

(a) Attach the fittings 48B-020, 48B-030 with the screws 48B-040, 48B-050 to the aft side wall assembly 48B-010.

(b) Assemble the post assembly 48B-260 as follows:

1 Attach the screws 48B-270.

(c) Attach the post assembly 48B-260 with the screws 48B-290, 48B-310, the washers 48B-240 and the caps 48B-300.

(d) Attach the angle 48B-340 with the screws 48B-350 and the washers 48B-360.

(e) Attach the angles 48B-210 with the screws 48B-230 and the washers 48B-240 to the aft side wall assembly 48B-010.

(f) Attach the oxygen container assy 48B-220 with the screws 48B-230 and the washers 48B-240 to the angles 48B-210.

(g) Attach the ground cable in accordance with the Process and Material Specification PMS 01-04-58 to the oxygen container assy 48B-220.

(h) Attach the angle 48B-180 with the screws 48B-230 and the washers 48B-240 to the aft side wall assembly 48B-010.

(i) Attach the cover oxygen container assy 48B-170 with the screws 48B-190 and the nuts 48B-200 to the angle 48B-180.

(j) Attach the studs 48B-250 and the washers 48B-240 to the cover oxygen container assy 48B-170.

(k) Attach the lavatory picture frame kit 48B-370 with the screws 48B-380 to the aft side wall assembly 48B-010.

(l) Attach the screws 48B-330 to the aft side wall assembly 48B-010.

(m) Attach the toilet seat cover dispenser 48B-320 to the screws 48B-330.

(n) Install and assemble the handle assemblies 48B-130 as follows:

1 Attach the special screws 48B-140 and the special washers 48B-160 to the aft side wall assembly 48B-010.

2 Attach the handle assemblies 48B-130 to the aft side wall assembly 48B-010.

3 Attach the security pins 48B-150 to the handle assemblies 48B-130.

SUB TASK 25-41-51-410-074-C01
D2549020405200 D2549020801800 D2549020812000 D2549020814600

3. Installation of the Side Wall (48B-1)

(a) Attach the fittings 48B-020, 48B-030 with the screws 48B-040, 48B-050 to the aft side wall assembly 48B-010.

(b) Assemble the post assembly 48B-260 as follows:

1 Attach the screws 48B-270.

(c) Attach the post assembly 48B-260 with the screws 48B-290, 48B-310, the washers 48B-240 and the caps 48B-300.

(d) Attach the angle 48B-340 with the screws 48B-350 and the washers 48B-360.

(e) Attach the angles 48B-210 with the screws 48B-230 and the washers 48B-240 to the aft side wall assembly 48B-010.

(f) Attach the oxygen container assy 48B-220 with the screws 48B-230 and the washers 48B-240 to the angles 48B-210.

(g) Attach the ground cable in accordance with the Process and Material Specification PMS 01-04-58 to the oxygen container assy 48B-220.

(h) Attach the angle 48B-180 with the screws 48B-230 and the washers 48B-240 to the aft side wall assembly 48B-010.

(i) Attach the cover oxygen container assy 48B-170 with the screws 48B-190 and the nuts 48B-200 to the angle 48B-180.

(j) Attach the studs 48B-250 and the washers 48B-240 to the cover oxygen container assy 48B-170.

(k) Attach the screws 48B-330 to the aft side wall assembly 48B-010.

(l) Attach the toilet seat cover dispenser 48B-320 to the screws 48B-330.

(m) Install and assemble the handle assemblies 48B-130 as follows:

1 Attach the special screws 48B-140 and the special washers 48B-160 to the aft side wall assembly 48B-010.

2 Attach the handle assemblies 48B-130 to the aft side wall assembly 48B-010.

3 Attach the security pins 48B-150 to the handle assemblies 48B-130.

SUB TASK 25-41-51-410-074-D01

D2549010400400 D2549010612400 D2549020806800 D2549020812800

D2549020814800 D2549030401800 D2549030408000 D2549030410400
D2549030614000 R225401662-000 R225401662-002

4. Installation of the Side Wall (48B-1)

(a) Attach the kick strip 48B-490.

(b) Attach the fittings 48B-020, 48B-030 with the screws 48B-040, 48B-050 to the aft side wall assembly 48B-010.

(c) Assemble the post assembly 48B-260 as follows:

1 Attach the screws 48B-270.

(d) Attach the post assembly 48B-260 with the screws 48B-290, 48B-310, the washers 48B-240 and the caps 48B-300.

(e) Attach the angle 48B-340 with the screws 48B-350 and the washers 48B-360.

(f) Attach the angles 48B-210 with the screws 48B-230 and the washers 48B-240 to the aft side wall assembly 48B-010.

(g) Attach the oxygen container assy 48B-220 with the screws 48B-230 and the washers 48B-240 to the angles 48B-210.

(h) Attach the ground cable in accordance with the Process and Material Specification PMS 01-04-58 to the oxygen container assy 48B-220.

(i) Attach the angle 48B-180 with the screws 48B-230 and the washers 48B-240 to the aft side wall assembly 48B-010.

(j) Attach the cover oxygen container assy 48B-170 with the screws 48B-190 and the nuts 48B-200 to the angle 48B-180.

(k) Attach the studs 48B-250 and the washers 48B-240 to the cover oxygen container assy 48B-170.

(l) Attach the screws 48B-330 to the aft side wall assembly 48B-010.

(m) Attach the toilet seat cover dispenser 48B-320 to the screws 48B-330.

(n) Install and assemble the handle assemblies 48B-130 as follows:

1 Attach the special screws 48B-140 and the special washers 48B-160 to the aft side wall assembly 48B-010.

2 Attach the handle assemblies 48B-130 to the aft side wall assembly 48B-010.

3 Attach the security pins 48B-150 to the handle assemblies 48B-130.

SUB TASK 25-41-51-410-074-E01
D2549010400200 D2549010400600 D2549010612600 D2549010613400 D2549020404400 D2549020811600 D2549020812400

5. Installation of the Side Wall (48B-1)

(a) Attach the fittings 48B-020, 48B-030 with the screws 48B-040, 48B-050 to the aft side wall assembly 48B-010.

(b) Assemble the post assembly 48B-260 as follows:

1 Attach the screws 48B-270.

(c) Attach the post assembly 48B-260 with the screws 48B-290, 48B-310, the washers 48B-240 and the caps 48B-300.

(d) Attach the angle 48B-340 with the screws 48B-350 and the washers 48B-360.

(e) Attach the angles 48B-210 with the screws 48B-230 and the washers 48B-240 to the aft side wall assembly 48B-010.

(f) Attach the oxygen container assy 48B-220 with the screws 48B-230 and the washers 48B-240 to the angles 48B-210.

(g) Attach the ground cable in accordance with the Process and Material Specification PMS 01-04-58 to the oxygen container assy 48B-220.

(h) Attach the angle 48B-180 with the screws 48B-230 and the washers 48B-240 to the aft side wall assembly 48B-010.

(i) Attach the cover oxygen container assy 48B-170 with the screws 48B-190 and the nuts 48B-200 to the angle 48B-180.

(j) Attach the studs 48B-250 and the washers 48B-240 to the cover oxygen container assy 48B-170.

(k) Install and assemble the handle assemblies 48B-130 as follows:

1 Attach the special screws 48B-140 and the special washers 48B-160 to the aft side wall assembly 48B-010.

2 Attach the handle assemblies 48B-130 to the aft side wall assembly 48B-010.

3 Attach the security pins 48B-150 to the handle assemblies 48B-130.

SUB TASK 25-41-51-410-074-F01
D2549010611400 D2549020513800 D2549030406000

6. Installation of the Side Wall (48B-1)

(a) Attach the fittings 48B-020, 48B-030 with the screws 48B-040, 48B-050 to the aft side wall assembly 48B-010.

(b) Assemble the post assembly 48B-260 as follows:

1 Attach the screws 48B-270.

(c) Attach the post assembly 48B-260 with the screws 48B-290, 48B-310, the washers 48B-240 and the caps 48B-300.

(d) Attach the angle 48B-340 with the screws 48B-350 and the washers 48B-360.

(e) Attach the angles 48B-210 with the screws 48B-230 and the washers 48B-240 to the aft side wall assembly 48B-010.

(f) Attach the oxygen container assy 48B-220 with the screws 48B-230 and the washers 48B-240 to the angles 48B-210.

(g) Attach the ground cable in accordance with the Process and Material Specification PMS 01-04-58 to the oxygen container assy 48B-220.

(h) Attach the angle 48B-180 with the screws 48B-230 and the washers 48B-240 to the aft side wall assembly 48B-010.

(i) Attach the cover oxygen container assy 48B-170 with the screws 48B-190 and the nuts 48B-200 to the angle 48B-180.

(j) Attach the studs 48B-250 and the washers 48B-240 to the cover oxygen container assy 48B-170.

(k) Install and assemble the handle assemblies 48B-130 as follows:

1 Attach the special screws 48B-140 and the special washers 48B-160 to the aft side wall assembly 48B-010.

2 Attach the handle assemblies 48B-130 to the aft side wall assembly 48B-010.

3 Attach the security pins 48B-150 to the handle assemblies 48B-130.

TASK 25-41-51-400-825-E01

D2549010400800 D2549010402800 D2549010614600 D2549020301800 D2549020400000 D2549020400200 D2549020400600 D2549020403800 D2549020404000 D2549020404600 D2549020513200 D2549020810800 D2549020812600 D2549020813200 D2549020813600 D2549030406600 D2549030408200 D2549030408400 R225401136-004 R225401136-018 R225401658-000

241. Installation of the Side Wall

A. General

This task gives you the installation and assembly procedures of the component.

B. Job Set-up Information

(1) Consumable Materials

REFERENCE	DESIGNATION
08-007	Sealant, High Temperature

Table 7034
Consumable Materials

C. Procedure

WARNING: **BE CAREFUL WHEN YOU USE SOLVENTS/CLEANING AGENTS, SEALANTS AND OTHER MATERIALS. OBEY THE MATERIAL MANUFACTURER'S INSTRUCTIONS AND THE LOCAL REGULATIONS. MAKE SURE THAT THERE IS A GOOD FLOW OF AIR THROUGH THE WORK AREA. DO NOT BREATHE THE FUMES. DO NOT SMOKE. DO NOT USE THESE MATERIALS NEAR A FLAME, SPARKS OR SOURCES OF HEAT. USE PROTECTIVE CLOTHING, GOGGLES AND GLOVES. IF YOU GET ONE OF THESE MATERIALS ON YOUR SKIN OR IN YOUR EYES, FLUSH IT AWAY WITH A FLOW OF CLEAN WATER. IF YOU GET ONE OF THESE MATERIALS IN YOUR MOUTH, GET IMMEDIATE MEDICAL AID. IN GENERAL, THESE MATERIALS ARE POISONOUS, FLAMMABLE AND SKIN IRRITANTS.**

WARNING: **KEEP ALL HYDROCARBONS (FUELS, LUBRICANTS, ETC.) AWAY FROM ALL SOURCES OF OXYGEN. OXYGEN BECOMES EXPLOSIVE WHEN IT TOUCHES HYDROCARBONS.**

WARNING: **TO PREVENT CONTAMINATION OF THE OXYGEN SYSTEM, MAKE SURE THAT YOUR HANDS AND ALL THE TOOLS ARE CLEAN.**

CAUTION: **DO ALL THE WORK ON A CLEAN, SOFT SURFACE TO PREVENT DAMAGE TO THE COMPONENTS.**

CAUTION: **MAKE SURE THAT ALL THE PARTS ARE CLEAN BEFORE YOU ASSEMBLE THEM.**

SUB TASK 25-41-51-410-075-A01
D2549030408200

1. Installation of the Side Wall (48C-1)

   (a) Attach the fittings 48C-020, 48C-030 with the screws 48C-040, 48C-050 to the aft side wall assembly 48C-010.

   (b) Assemble the post assembly 48C-270 as follows:

      1 Attach the screws 48C-280.

   (c) Attach the post assembly 48C-270 with the screws 48C-300, 48C-320, the washers 48C-250 and the caps 48C-310.

   (d) Assemble the single door emergency unlocking device assembly 48C-400 as follows:

      WARNING: **BE CAREFUL WHEN YOU USE MATERIAL NO. 08-007 SEALANT, HIGH TEMPERATURE. OBEY THE MATERIAL MANUFACTURER'S INSTRUCTIONS.**

      1 Apply the Material No. 08-007 Sealant, High Temperature to the snap catch 48C-450 and to the pin 48C-440 and attach the emergency unlocking device pivot 48C-430, the snap catch 48C-450 and the pin 48C-440 to the emergency unlocking device housing 48C-410.

      NOTE: **Adjust the snap catch 48C-450 a half turn before stop.**

      WARNING: **BE CAREFUL WHEN YOU USE MATERIAL NO. 08-007 SEALANT, HIGH TEMPERATURE. OBEY THE MATERIAL MANUFACTURER'S INSTRUCTIONS.**

      2 Apply the Material No. 08-007 Sealant, High Temperature to the bolt 48C-460 and attach the emergency unlocking device strike 48C-420 with the bolt 48C-460 to the emergency unlocking device housing 48C-410.

   (e) Attach the single door emergency unlocking device assembly 48C-400 and the plates 48C-480 with the screws 48C-470, 48C-471, the nuts 48C-490 to the post assembly 48C-270.

   (f) Attach the angle 48C-350 with the screws 48C-360 and the washers 48C-370 to the aft side wall assembly 48C-010.

(g) Attach the angles 48C-220 with the screws 48C-240 and the washers 48C-250 to the aft side wall assembly 48C-010.

(h) Attach the oxygen container assy 48C-230 with the screws 48C-240 and the washers 48C-250 to the angles 48C-220.

(i) Attach the ground cable in accordance with the Process and Material Specification PMS 01-04-58 to the oxygen container assy 48C-230.

(j) Attach the angle 48C-190 with the screws 48C-240 and the washers 48C-250 to the aft side wall assembly 48C-010.

(k) Attach the cover oxygen container assy 48C-180 with the screws 48C-200 and the nuts 48C-210 to the angle 48C-190.

(l) Attach the studs 48C-260 and the washers 48C-250 to the cover oxygen container assy 48C-180.

(m) Attach the screws 48C-340 to the aft side wall assembly 48C-010.

(n) Attach the toilet seat cover dispenser 48C-330 to the screws 48C-340.

(o) Install and assemble the handle assemblies 48C-140 as follows:

1 Attach the special screws 48C-150 and the special washers 48C-170 to the aft side wall assembly 48C-010.

2 Attach the handle assemblies 48C-140 to the aft side wall assembly 48C-010.

3 Attach the security pins 48C-160 to the handle assemblies 48C-140.

SUB TASK 25-41-51-410-075-B01
D2549010402800 D2549020403800

2. Installation of the Side Wall (48C-1)

(a) Attach the fittings 48C-020, 48C-030 with the screws 48C-040, 48C-050 to the aft side wall assembly 48C-010.

(b) Assemble the post assembly 48C-270 as follows:

1 Attach the screws 48C-280.

(c) Attach the post assembly 48C-270 with the screws 48C-300, 48C-320, the washers 48C-250 and the caps 48C-310.

(d) Attach the angle 48C-350 with the screws 48C-360 and the washers 48C-370 to the aft side wall assembly 48C-010.

(e) Attach the angles 48C-220 with the screws 48C-240 and the washers 48C-250 to the aft side wall assembly 48C-010.

(f) Attach the oxygen container assy 48C-230 with the screws 48C-240 and the washers 48C-250 to the angles 48C-220.

(g) Attach the ground cable in accordance with the Process and Material Specification PMS 01-04-58 to the oxygen container assy 48C-230.

(h) Attach the angle 48C-190 with the screws 48C-240 and the washers 48C-250 to the aft side wall assembly 48C-010.

(i) Attach the cover oxygen container assy 48C-180 with the screws 48C-200 and the nuts 48C-210 to the angle 48C-190.

(j) Attach the studs 48C-260 and the washers 48C-250 to the cover oxygen container assy 48C-180.

(k) Attach the screws 48C-340 to the aft side wall assembly 48C-010.

(l) Attach the toilet seat cover dispenser 48C-330 to the screws 48C-340.

(m) Install and assemble the handle assemblies 48C-140 as follows:

1 Attach the special screws 48C-150 and the special washers 48C-170 to the aft side wall assembly 48C-010.

2 Attach the handle assemblies 48C-140 to the aft side wall assembly 48C-010.

3 Attach the security pins 48C-160 to the handle assemblies 48C-140.

SUB TASK 25-41-51-410-075-C01
D2549010614600 D2549020400200 D2549020404600 D2549020812600 D2549020813600 R225401658-000

3. Installation of the Side Wall (48C-1)

(a) Attach the fittings 48C-020, 48C-030 with the screws 48C-040, 48C-050 to the aft side wall assembly 48C-010.

(b) Assemble the post assembly 48C-270 as follows:

1 Attach the screws 48C-280.

(c) Attach the post assembly 48C-270 with the screws 48C-300, 48C-320, the washers 48C-250 and the caps 48C-310.

(d) Attach the angle 48C-350 with the screws 48C-360 and the washers 48C-370 to the aft side wall assembly 48C-010.

(e) Attach the angles 48C-220 with the screws 48C-240 and the washers 48C-250 to the aft side wall assembly 48C-010.

(f) Attach the oxygen container assy 48C-230 with the screws 48C-240, 48C-245 and the washers 48C-250 to the angles 48C-220.

(g) Attach the ground cable in accordance with the Process and Material Specification PMS 01-04-58 to the oxygen container assy 48C-230.

(h) Attach the angle 48C-190 with the screws 48C-240 and the washers 48C-250 to the aft side wall assembly 48C-010.

(i) Attach the cover oxygen container assy 48C-180 with the screws 48C-200 and the nuts 48C-210 to the angle 48C-190.

(j) Attach the studs 48C-260 and the washers 48C-250 to the cover oxygen container assy 48C-180.

(k) Attach the screws 48C-340 to the aft side wall assembly 48C-010.

(l) Attach the toilet seat cover dispenser 48C-330 to the screws 48C-340.

(m) Install and assemble the handle assemblies 48C-140 as follows:

1 Attach the special screws 48C-150 and the special washers 48C-170 to the aft side wall assembly 48C-010.

2 Attach the handle assemblies 48C-140 to the aft side wall assembly 48C-010.

3 Attach the security pins 48C-160 to the handle assemblies 48C-140.

SUB TASK 25-41-51-410-075-D01
D2549020301800 D2549020400600 D2549020404000 D2549020813200

4. Installation of the Side Wall (48C-1)

(a) Attach the fittings 48C-020, 48C-030 with the screws 48C-040, 48C-050 to the aft side wall assembly 48C-010.

(b) Assemble the post assembly 48C-270 as follows:

1 Attach the screws 48C-280.

(c) Attach the post assembly 48C-270 with the screws 48C-300, 48C-320, the washers 48C-250 and the caps 48C-310.

(d) Assemble the single door emergency unlocking device assembly 48C-400 as follows:

WARNING: BE CAREFUL WHEN YOU USE MATERIAL NO. 08-007 SEALANT, HIGH TEMPERATURE. OBEY THE MATERIAL MANUFACTURER'S INSTRUCTIONS.

1 Apply the Material No. 08-007 Sealant, High Temperature to the snap catch 48C-450 and to the pin 48C-440 and attach the emergency unlocking device pivot 48C-430, the snap catch 48C-450 and the pin 48C-440 to the emergency unlocking device housing 48C-410.

NOTE: Adjust the snap catch 48C-450 a half turn before stop.

WARNING: BE CAREFUL WHEN YOU USE MATERIAL NO. 08-007 SEALANT, HIGH TEMPERATURE. OBEY THE MATERIAL MANUFACTURER'S INSTRUCTIONS.

2 Apply the Material No. 08-007 Sealant, High Temperature to the bolt 48C-460 and attach the emergency unlocking device strike 48C-420 with the bolt 48C-460 to the emergency unlocking device housing 48C-410.

(e) Attach the single door emergency unlocking device assembly 48C-400 with the screws 48C-470 to the post assembly 48C-270.

(f) Attach the angle 48C-350 with the screws 48C-360 and the washers 48C-370 to the aft side wall assembly 48C-010.

(g) Attach the angles 48C-220 with the screws 48C-240 and the washers 48C-250 to the aft side wall assembly 48C-010.

(h) Attach the oxygen container assy 48C-230 with the screws 48C-240 and the washers 48C-250 to the angles 48C-220.

(i) Attach the ground cable in accordance with the Process and Material Specification PMS 01-04-58 to the oxygen container assy 48C-230.

(j) Attach the angle 48C-190 with the screws 48C-240 and the washers 48C-250 to the aft side wall assembly 48C-010.

(k) Attach the cover oxygen container assy 48C-180 with the screws 48C-200 and the nuts 48C-210 to the angle 48C-190.

(l) Attach the studs 48C-260 and the washers 48C-250 to the cover oxygen container assy 48C-180.

(m) Attach the screws 48C-340 to the aft side wall assembly 48C-010.

(n) Attach the toilet seat cover dispenser 48C-330 to the screws 48C-340.

(o) Install and assemble the handle assemblies 48C-140 as follows:

1 Attach the special screws 48C-150 and the special washers 48C-170 to the aft side wall assembly 48C-010.

2 Attach the handle assemblies 48C-140 to the aft side wall assembly 48C-010.

3 Attach the security pins 48C-160 to the handle assemblies 48C-140.

SUB TASK 25-41-51-410-075-E01
D2549020400000 D2549030408400

5. Installation of the Side Wall (48C-1)

(a) Attach the fittings 48C-020, 48C-030 with the screws 48C-040, 48C-050 to the aft side wall assembly 48C-010.

(b) Assemble the post assembly 48C-270 as follows:

1 Attach the screws 48C-280.

(c) Attach the post assembly 48C-270 with the screws 48C-300, 48C-320, the washers 48C-250 and the caps 48C-310.

(d) Attach the angle 48C-350 with the screws 48C-360 and the washers 48C-370 to the aft side wall assembly 48C-010.

(e) Attach the angles 48C-220 with the screws 48C-240 and the washers 48C-250 to the aft side wall assembly 48C-010.

(f) Attach the oxygen container assy 48C-230 with the screws 48C-240 and the washers 48C-250 to the angles 48C-220.

(g) Attach the ground cable in accordance with the Process and Material Specification PMS 01-04-58 to the oxygen container assy 48C-230.

(h) Attach the angle 48C-190 with the screws 48C-240 and the washers 48C-250 to the aft side wall assembly 48C-010.

(i) Attach the cover oxygen container assy 48C-180 with the screws 48C-200 and the nuts 48C-210 to the angle 48C-190.

(j) Attach the studs 48C-260 and the washers 48C-250 to the cover oxygen container assy 48C-180.

(k) Attach the coat hook 48C-380 with the screw 48C-390.

(l) Attach the screws 48C-340 to the aft side wall assembly 48C-010.

(m) Attach the toilet seat cover dispenser 48C-330 to the screws 48C-340.

(n) Install and assemble the handle assemblies 48C-140 as follows:

1 Attach the special screws 48C-150 and the special washers 48C-170 to the aft side wall assembly 48C-010.

2 Attach the handle assemblies 48C-140 to the aft side wall assembly 48C-010.

3 Attach the security pins 48C-160 to the handle assemblies 48C-140.

SUB TASK 25-41-51-410-075-F01
D2549010400800

6. Installation of the Side Wall (48C-1)

(a) Attach the fittings 48C-020, 48C-030 with the screws 48C-040, 48C-050 to the aft side wall assembly 48C-010.

(b) Assemble the post assembly 48C-270 as follows:

1 Attach the screws 48C-280.

(c) Attach the post assembly 48C-270 with the screws 48C-300, 48C-320, the washers 48C-250 and the caps 48C-310.

(d) Attach the angle 48C-350 with the screws 48C-360 and the washers 48C-370 to the aft side wall assembly 48C-010.

(e) Attach the angles 48C-220 with the screws 48C-240 and the washers 48C-250 to the aft side wall assembly 48C-010.

(f) Attach the oxygen container assy 48C-230 with the screws 48C-240 and the washers 48C-250 to the angles 48C-220.

(g) Attach the ground cable in accordance with the Process and Material Specification PMS 01-04-58 to the oxygen container assy 48C-230.

(h) Attach the angle 48C-190 with the screws 48C-240 and the washers 48C-250 to the aft side wall assembly 48C-010.

(i) Attach the cover oxygen container assy 48C-180 with the screws 48C-200 and the nuts 48C-210 to the angle 48C-190.

(j) Attach the studs 48C-260 and the washers 48C-250 to the cover oxygen container assy 48C-180.

(k) Attach the coat hook 48C-380 with the screw 48C-390.

(l) Install and assemble the handle assemblies 48C-140 as follows:

1 Attach the special screws 48C-150 and the special washers 48C-170 to the aft side wall assembly 48C-010.

2 Attach the handle assemblies 48C-140 to the aft side wall assembly 48C-010.

3 Attach the security pins 48C-160 to the handle assemblies 48C-140.

SUB TASK 25-41-51-410-075-G01
D2549020810800

7. Installation of the Side Wall (48C-1)

(a) Attach the fittings 48C-020, 48C-030 with the screws 48C-040, 48C-050 to the aft side wall assembly 48C-010.

(b) Assemble the post assembly 48C-270 as follows:

1 Attach the screws 48C-280.

(c) Attach the post assembly 48C-270 with the screws 48C-300, 48C-320, the washers 48C-250 and the caps 48C-310.

(d) Attach the angle 48C-350 with the screws 48C-360 and the washers 48C-370 to the aft side wall assembly 48C-010.

(e) Attach the angles 48C-220 with the screws 48C-240 and the washers 48C-250 to the aft side wall assembly 48C-010.

(f) Attach the oxygen container assy 48C-230 with the screws 48C-240 and the washers 48C-250 to the angles 48C-220.

(g) Attach the ground cable in accordance with the Process and Material Specification PMS 01-04-58 to the oxygen container assy 48C-230.

(h) Attach the angle 48C-190 with the screws 48C-240 and the washers 48C-250 to the aft side wall assembly 48C-010.

(i) Attach the cover oxygen container assy 48C-180 with the screws 48C-200 and the nuts 48C-210 to the angle 48C-190.

(j) Attach the studs 48C-260 and the washers 48C-250 to the cover oxygen container assy 48C-180.

(k) Install and assemble the handle assemblies 48C-140 as follows:

1 Attach the special screws 48C-150 and the special washers 48C-170 to the aft side wall assembly 48C-010.

2 Attach the handle assemblies 48C-140 to the aft side wall assembly 48C-010.

3 Attach the security pins 48C-160 to the handle assemblies 48C-140.

SUB TASK 25-41-51-410-075-H01
D2549020513200 D2549030406600 R225401136-004 R225401136-018

8. Installation of the Side Wall (48C-1)

(a) Attach the fittings 48C-020, 48C-030 with the screws 48C-040, 48C-050 to the aft side wall assembly 48C-010.

(b) Assemble the post assembly 48C-270 as follows:

1 Attach the screws 48C-280.

(c) Attach the post assembly 48C-270 with the screws 48C-300, 48C-320, the washers 48C-250 and the caps 48C-310.

(d) Attach the angle 48C-350 with the screws 48C-360 and the washers 48C-370 to the aft side wall assembly 48C-010.

(e) Attach the angles 48C-220 with the screws 48C-240 and the washers 48C-250 to the aft side wall assembly 48C-010.

(f) Attach the oxygen container assy 48C-230 with the screws 48C-240, 48C-245 and the washers 48C-250 to the angles 48C-220.

(g) Attach the ground cable in accordance with the Process and Material Specification PMS 01-04-58 to the oxygen container assy 48C-230.

(h) Attach the angle 48C-190 with the screws 48C-240 and the washers 48C-250 to the aft side wall assembly 48C-010.

(i) Attach the cover oxygen container assy 48C-180 with the screws 48C-200 and the nuts 48C-210 to the angle 48C-190.

(j) Attach the studs 48C-260 and the washers 48C-250 to the cover oxygen container assy 48C-180.

(k) Install and assemble the handle assemblies 48C-140 as follows:

1 Attach the special screws 48C-150 and the special washers 48C-170 to the aft side wall assembly 48C-010.

2 Attach the handle assemblies 48C-140 to the aft side wall assembly 48C-010.

3 Attach the security pins 48C-160 to the handle assemblies 48C-140.

TASK 25-41-51-400-825-F01

D2547161903000 D2549010400000 D2549010401800 D2549010402200 D2549010402600 D2549010403600 D2549010406800 D2549020302800 D2549020401200 D2549020402600 D2549020403000 D2549020407000 D2549020407600 D2549020407800 D2549020409000 D2549020413400 D2549020805200 D2549020807200 D2549030407800 D2549030409000 D2549030409800 D2549030411400 D2549030412400 D2549030700200 D2549030702600 R225401134-014 R225401134-038 R225401152-010 R225401196-018 R225401196-020 R225401196-022 R225401196-024 R225401196-042 R225401196-064 R225401196-066 R225401196-068 R225401196-070 R225401648-004 R225401648-006 R225401648-008 R225401676-000 R225401683-000

242. Installation of the Side Wall

A. General

This task gives you the installation and assembly procedures of the component.

B. Job Set-up Information

(1) Consumable Materials

REFERENCE	DESIGNATION
08-007	Sealant, High Temperature

Table 7035
Consumable Materials

C. Procedure

WARNING: **BE CAREFUL WHEN YOU USE SOLVENTS/CLEANING AGENTS, SEALANTS AND OTHER MATERIALS. OBEY THE MATERIAL MANUFACTURER'S INSTRUCTIONS AND THE LOCAL REGULATIONS. MAKE SURE THAT THERE IS A GOOD FLOW OF AIR THROUGH THE WORK AREA. DO NOT BREATHE THE FUMES. DO NOT SMOKE. DO NOT USE THESE MATERIALS NEAR A FLAME, SPARKS OR SOURCES OF HEAT. USE PROTECTIVE CLOTHING, GOGGLES AND GLOVES. IF YOU GET ONE OF THESE MATERIALS ON YOUR SKIN OR IN YOUR EYES, FLUSH IT AWAY WITH A FLOW OF CLEAN WATER. IF YOU GET ONE OF THESE MATERIALS IN YOUR MOUTH, GET IMMEDIATE MEDICAL AID. IN GENERAL, THESE MATERIALS ARE POISONOUS, FLAMMABLE AND SKIN IRRITANTS.**

WARNING: **KEEP ALL HYDROCARBONS (FUELS, LUBRICANTS, ETC.) AWAY FROM ALL SOURCES OF OXYGEN. OXYGEN BECOMES EXPLOSIVE WHEN IT TOUCHES HYDROCARBONS.**

WARNING: **TO PREVENT CONTAMINATION OF THE OXYGEN SYSTEM, MAKE SURE THAT YOUR HANDS AND ALL THE TOOLS ARE CLEAN.**

CAUTION: **DO ALL THE WORK ON A CLEAN, SOFT SURFACE TO PREVENT DAMAGE TO THE COMPONENTS.**

CAUTION: **MAKE SURE THAT ALL THE PARTS ARE CLEAN BEFORE YOU ASSEMBLE THEM.**

SUB TASK 25-41-51-410-076-A01
D2549010400000 D2549010402600

1. Installation of the Side Wall (48D-1)

   (a) Attach the fittings 48D-020, 48D-025 with the screws 48D-030, 48D-035 to the aft side wall assembly 48D-010.

   (b) Assemble the post assembly 48D-210 as follows:

      1 Attach the plates 48D-215 with the screws 48D-220.

   (c) Attach the post assembly 48D-210 with the screws 48D-240, 48D-260, the washers 48D-190 and the caps 48D-250.

   (d) Assemble the single door emergency unlocking device assembly 48D-350 as follows:

      WARNING: **BE CAREFUL WHEN YOU USE MATERIAL NO. 08-007 SEALANT, HIGH TEMPERATURE. OBEY THE MATERIAL MANUFACTURER'S INSTRUCTIONS.**

      1 Apply the Material No. 08-007 Sealant, High Temperature to the snap catch 48D-400 and to the pin 48D-390 and attach the emergency unlocking device pivot 48D-380, the snap catch 48D-400 and the pin 48D-390 to the emergency unlocking device housing 48D-360.

      NOTE: **Adjust the snap catch 48D-400 a half turn before stop.**

      WARNING: **BE CAREFUL WHEN YOU USE MATERIAL NO. 08-007 SEALANT, HIGH TEMPERATURE. OBEY THE MATERIAL MANUFACTURER'S INSTRUCTIONS.**

      2 Apply the Material No. 08-007 Sealant, High Temperature to the bolt 48D-410 and attach the emergency unlocking device strike 48D-370 with the bolt 48D-410 to the emergency unlocking device housing 48D-360.

(e) Attach the single door emergency unlocking device assembly 48D-350 and the plates 48D-430 with the screws 48D-421 and the nuts 48D-440 to the post assembly 48D-210.

(f) Attach the angle 48D-320 with the screws 48D-240 and the washers 48D-190 to the aft side wall assembly 48D-010.

(g) Attach the angles 48D-160 with the screws 48D-180 and the washers 48D-190 to the aft side wall assembly 48D-010.

(h) Attach the oxygen container assy 48D-170 with the screws 48D-180, 48D-185, 48D-187 and the washers 48D-190, 48D-195 to the angles 48D-160.

(i) Attach the ground cable in accordance with the Process and Material Specification PMS 01-04-58 to the oxygen container assy 48D-170.

(j) Attach the angle 48D-130 with the screws 48D-180 and the washers 48D-190 to the aft side wall assembly 48D-010.

(k) Attach the cover oxygen container assy 48D-120 with the screws 48D-140 and the nuts 48D-150 to the angle 48D-130.

(l) Attach the studs 48D-200 to the oxygen container assy 48D-120.

(m) Attach the screws 48D-340 to the aft side wall assembly 48D-010.

(n) Attach the toilet seat cover dispenser 48D-330 to the screws 48D-340.

(o) Attach the support 48D-310 with the screws 48D-245 and the washers 48D-190 to the aft side wall assembly 48D-010.

(p) Install and assemble the handle assembly 48D-270 as follows:

1 Attach the special screws 48D-280 and the special washers 48D-300 to the aft side wall assembly 48D-010.

2 Attach the bushings 48D-305 to the aft side wall assembly 48D-010.

3 Attach the handle assembly 48D-270 to the aft side wall assembly 48D-010.

4 Attach the security pins 48D-290 to the handle assembly 48D-270.

SUB TASK 25-41-51-410-076-B01
D2549010402200 R225401676-000

2. Installation of the Side Wall (48D-1)

(a) Attach the fittings 48D-020, 48D-025 with the screws 48D-030, 48D-035 to the aft side wall assembly 48D-010.

(b) Assemble the post assembly 48D-210 as follows:

1 Attach the plates 48D-217 with the screws 48D-225.

2 Attach the plates 48D-215 with the screws 48D-220.

(c) Attach the post assembly 48D-210 with the screws 48D-240, 48D-260, the washers 48D-190 and the caps 48D-250.

(d) Assemble the single door emergency unlocking device assembly 48D-350 as follows:

WARNING: BE CAREFUL WHEN YOU USE MATERIAL NO. 08-007 SEALANT, HIGH TEMPERATURE. OBEY THE MATERIAL MANUFACTURER'S INSTRUCTIONS.

1 Apply the Material No. 08-007 Sealant, High Temperature to the snap catch 48D-400 and to the pin 48D-390 and attach the emergency unlocking device pivot 48D-380, the snap catch 48D-400 and the pin 48D-390 to the emergency unlocking device housing 48D-360.

NOTE: Adjust the snap catch 48D-400 a half turn before stop.

WARNING: BE CAREFUL WHEN YOU USE MATERIAL NO. 08-007 SEALANT, HIGH TEMPERATURE. OBEY THE MATERIAL MANUFACTURER'S INSTRUCTIONS.

2 Apply the Material No. 08-007 Sealant, High Temperature to the bolt 48D-410 and attach the emergency unlocking device strike 48D-370 with the bolt 48D-410 to the emergency unlocking device housing 48D-360.

(e) Attach the single door emergency unlocking device assembly 48D-350 with the screws 48D-420 to the post assembly 48D-210.

(f) Attach the angle 48D-320 with the screws 48D-240 and the washers 48D-190 to the aft side wall assembly 48D-010.

(g) Attach the angles 48D-160 with the screws 48D-180 and the washers 48D-190 to the aft side wall assembly 48D-010.

(h) Attach the oxygen container assy 48D-170 with the screws 48D-180 and the washers 48D-190 to the angles 48D-160.

(i) Attach the ground cable in accordance with the Process and Material Specification PMS 01-04-58 to the oxygen container assy 48D-170.

(j) Attach the angle 48D-130 with the screws 48D-180 and the washers 48D-190 to the aft side wall assembly 48D-010.

(k) Attach the cover oxygen container assy 48D-120 with the screws 48D-140 and the nuts 48D-150 to the angle 48D-130.

(l) Attach the studs 48D-200 to the oxygen container assy 48D-120.

(m) Attach the support 48D-310 with the screws 48D-245 and the washers 48D-190 to the aft side wall assembly 48D-010.

(n) Install and assemble the handle assembly 48D-270 as follows:

1 Attach the special screws 48D-280 and the special washers 48D-300 to the aft side wall assembly 48D-010.

2 Attach the bushing 48D-305 to the aft side wall assembly 48D-010.

3 Attach the handle assembly 48D-270 to the aft side wall assembly 48D-010.

4 Attach the security pins 48D-290 to the handle assembly 48D-270.

SUB TASK 25-41-51-410-076-C01

D2549020302800 D2549020401200 D2549020402600 D2549020403000 D2549020407000 D2549020407800 D2549020409000 D2549020413400 D2549030409000 D2549030700200 D2549030702600 R225401134-014 R225401134-038 R225401152-010 R225401196-018 R225401196-020 R225401196-022 R225401196-024 R225401196-042 R225401196-064 R225401196-066 R225401196-068 R225401196-070

3. Installation of the Side Wall (48D-1)

(a) If removed, attach the kick strip 48D-580.

(b) Attach the fittings 48D-020, 48D-025 with the screws 48D-030, 48D-035 to the aft side wall assembly 48D-010.

(c) Assemble the post assembly 48D-210 as follows:

1 Attach the plates 48D-217 with the screws 48D-225.

2 Attach the plates 48D-215 with the screws 48D-220.

(d) Attach the post assembly 48D-210 with the screws 48D-240, 48D-260, the washers 48D-190 and the caps 48D-250.

(e) Assemble the single door emergency unlocking device assembly 48D-350 as follows:

WARNING: BE CAREFUL WHEN YOU USE MATERIAL NO. 08-007 SEALANT, HIGH TEMPERATURE. OBEY THE MATERIAL MANUFACTURER'S INSTRUCTIONS.

1 Apply the Material No. 08-007 Sealant, High Temperature to the snap catch 48D-400 and to the pin 48D-390 and attach the emergency unlocking device pivot 48D-380, the snap catch 48D-400 and the pin 48D-390 to the emergency unlocking device housing 48D-360.

NOTE: Adjust the snap catch 48D-400 a half turn before stop.

WARNING: BE CAREFUL WHEN YOU USE MATERIAL NO. 08-007 SEALANT, HIGH TEMPERATURE. OBEY THE MATERIAL MANUFACTURER'S INSTRUCTIONS.

2 Apply the Material No. 08-007 Sealant, High Temperature to the bolt 48D-410 and attach the emergency unlocking device strike 48D-370 with the bolt 48D-410 to the emergency unlocking device housing 48D-360.

(f) Attach the single door emergency unlocking device assembly 48D-350 with the screws 48D-420 to the post assembly 48D-210.

(g) Attach the angle 48D-320 with the screws 48D-240 and the washers 48D-190 to the aft side wall assembly 48D-010.

(h) Attach the angles 48D-160 with the screws 48D-180 and the washers 48D-190 to the aft side wall assembly 48D-010.

(i) Attach the oxygen container assy 48D-170 with the screws 48D-180, 48D-187 and the washers 48D-190, 48D-195 to the angles 48D-160.

(j) Attach the ground cable in accordance with the Process and Material Specification PMS 01-04-58 to the oxygen container assy 48D-170.

(k) Attach the angle 48D-130 with the screws 48D-180 and the washers 48D-190 to the aft side wall assembly 48D-010.

(l) Attach the cover oxygen container assy 48D-120 with the screws 48D-140 and the nuts 48D-150 to the angle 48D-130.

(m) Attach the studs 48D-200 to the oxygen container assy 48D-120.

(n) Attach the screws 48D-340 to the aft side wall assembly 48D-010.

(o) Attach the toilet seat cover dispenser 48D-330 to the screws 48D-340.

(p) Attach the support 48D-310 with the screws 48D-245 and the washers 48D-190 to the aft side wall assembly 48D-010.

(q) Install and assemble the handle assembly 48D-270 as follows:

1 Attach the special screws 48D-280 and the special washers 48D-300 to the aft side wall assembly 48D-010.

2 Attach the bushing 48D-305 to the aft side wall assembly 48D-010.

3 Attach the handle assembly 48D-270 to the aft side wall assembly 48D-010.

4 Attach the security pins 48D-290 to the handle assembly 48D-270.

SUB TASK 25-41-51-410-076-D01
D2549010401800 D2549010403600 D2549010406800 D2549020407600 D2549030411400 D2549030412400 R225401648-004 R225401648-006 R225401648-008 R225401683-000

4. Installation of the Side Wall (48D-1)

(a) Attach the fittings 48D-020, 48D-025 with the screws 48D-030, 48D-035 to the aft side wall assembly 48D-010.

(b) Assemble the post assembly 48D-210 as follows:

1 Attach the plates 48D-217 with the screws 48D-225.

2 Attach the plates 48D-215 with the screws 48D-220.

(c) Attach the post assembly 48D-210 with the screws 48D-240, 48D-260, the washers 48D-190 and the caps 48D-250.

(d) Assemble the single door emergency unlocking device assembly 48D-350 as follows:

WARNING: BE CAREFUL WHEN YOU USE MATERIAL NO. 08-007 SEALANT, HIGH TEMPERATURE. OBEY THE MATERIAL MANUFACTURER'S INSTRUCTIONS.

1 Apply the Material No. 08-007 Sealant, High Temperature to the snap catch 48D-400 and to the pin 48D-390 and attach the emergency unlocking device pivot 48D-380, the snap catch 48D-400 and the pin 48D-390 to the emergency unlocking device housing 48D-360.

NOTE: Adjust the snap catch 48D-400 a half turn before stop.

WARNING: BE CAREFUL WHEN YOU USE MATERIAL NO. 08-007 SEALANT, HIGH TEMPERATURE. OBEY THE MATERIAL MANUFACTURER'S INSTRUCTIONS.

2 Apply the Material No. 08-007 Sealant, High Temperature to the bolt 48D-410 and attach the emergency unlocking device strike 48D-370 with the bolt 48D-410 to the emergency unlocking device housing 48D-360.

(e) Attach the single door emergency unlocking device assembly 48D-350 with the screws 48D-420 to the post assembly 48D-210.

(f) Attach the angle 48D-320 with the screws 48D-240 and the washers 48D-190 to the aft side wall assembly 48D-010.

(g) Attach the angles 48D-160 with the screws 48D-180 and the washers 48D-190 to the aft side wall assembly 48D-010.

(h) Attach the oxygen container assy 48D-170 with the screws 48D-180, 48D-187 and the washers 48D-190 to the angles 48D-160.

(i) Attach the ground cable in accordance with the Process and Material Specification PMS 01-04-58 to the oxygen container assy 48D-170.

(j) Attach the angle 48D-130 with the screws 48D-180 and the washers 48D-190 to the aft side wall assembly 48D-010.

(k) Attach the cover oxygen container assy 48D-120 with the screws 48D-140 and the nuts 48D-150 to the angle 48D-130.

(l) Attach the studs 48D-200 to the oxygen container assy 48D-120.

(m) Attach the screws 48D-340 to the aft side wall assembly 48D-010.

(n) Attach the toilet seat cover dispenser 48D-330 to the screws 48D-340.

(o) Attach the support 48D-310 with the screws 48D-245 and the washers 48D-190 to the aft side wall assembly 48D-010.

(p) Install and assemble the handle assembly 48D-270 as follows:

1 Attach the special screws 48D-280 and the special washers 48D-300 to the aft side wall assembly 48D-010.

2 Attach the bushing 48D-305 to the aft side wall assembly 48D-010.

3 Attach the handle assembly 48D-270 to the aft side wall assembly 48D-010.

4 Attach the security pins 48D-290 to the handle assembly 48D-270.

SUB TASK 25-41-51-410-076-E01
D2549020805200 D2549030407800 D2549030409800

5. Installation of the Side Wall (48D-1)

(a) Attach the fittings 48D-020, 48D-025 with the screws 48D-030, 48D-035 to the aft side wall assembly 48D-010.

(b) Assemble the post assembly 48D-210 as follows:

1 Attach the plates 48D-215 with the screws 48D-220.

(c) Attach the post assembly 48D-210 with the screws 48D-240, 48D-260, the washers 48D-190 and the caps 48D-250.

(d) Attach the angle 48D-320 with the screws 48D-240 and the washers 48D-190 to the aft side wall assembly 48D-010.

(e) Attach the angles 48D-160 with the screws 48D-180 and the washers 48D-190 to the aft side wall assembly 48D-010.

(f) Attach the oxygen container assy 48D-170 with the screws 48D-180 and the washers 48D-190 to the angles 48D-160.

(g) Attach the ground cable in accordance with the Process and Material Specification PMS 01-04-58 to the oxygen container assy 48D-170.

(h) Attach the angle 48D-130 with the screws 48D-180 and the washers 48D-190 to the aft side wall assembly 48D-010.

(i) Attach the cover oxygen container assy 48D-120 with the screws 48D-140 and the nuts 48D-150 to the angle 48D-130.

(j) Attach the studs 48D-200 to the oxygen container assy 48D-120.

(k) Attach the support 48D-310 with the screws 48D-245 and the washers 48D-190 to the aft side wall assembly 48D-010.

(l) Install and assemble the handle assembly 48D-270 as follows:

1 Attach the special screws 48D-280 and the special washers 48D-300 to the aft side wall assembly 48D-010.

2 Attach the bushing 48D-305 to the aft side wall assembly 48D-010.

3 Attach the handle assembly 48D-270 to the aft side wall assembly 48D-010.

4 Attach the security pins 48D-290 to the handle assembly 48D-270.

SUB TASK 25-41-51-410-076-F01
D2547161903000

6. Installation of the Side Wall (48D-1)

(a) Attach the fittings 48D-020, 48D-025 with the screws 48D-030, 48D-035 to the aft side wall assembly 48D-010.

(b) Assemble the post assembly 48D-210 as follows:

1 Attach the plates 48D-215 with the screws 48D-220.

(c) Attach the post assembly 48D-210 with the screws 48D-240, 48D-260, the washers 48D-190 and the caps 48D-250.

(d) Attach the screws 48D-240 and the washers 48D-190 to the aft side wall assembly 48D-010.

(e) Attach the angles 48D-160 with the screws 48D-180 and the washers 48D-190 to the aft side wall assembly 48D-010.

(f) Attach the oxygen container assy 48D-170 with the screws 48D-180 and the washers 48D-190 to the angles 48D-160.

(g) Attach the ground cable in accordance with the Process and Material Specification PMS 01-04-58 to the oxygen container assy 48D-170.

(h) Attach the angle 48D-130 with the screws 48D-180 and the washers 48D-190 to the aft side wall assembly 48D-010.

(i) Attach the cover oxygen container assy 48D-120 with the screws 48D-140 and the nuts 48D-150 to the angle 48D-130.

(j) Attach the studs 48D-200 to the oxygen container assy 48D-120.

(k) Attach the screws 48D-340 to the aft side wall assembly 48D-010.

(l) Attach the toilet seat cover dispenser 48D-330 to the screws 48D-340.

(m) Attach the support 48D-310 with the screws 48D-245 and the washers 48D-190 to the aft side wall assembly 48D-010.

(n) Install and assemble the handle assembly 48D-270 as follows:

1 Attach the special screws 48D-280 and the special washers 48D-300 to the aft side wall assembly 48D-010.

2 Attach the bushing 48D-305 to the aft side wall assembly 48D-010.

3 Attach the handle assembly 48D-270 to the aft side wall assembly 48D-010.

4 Attach the security pins 48D-290 to the handle assembly 48D-270.

SUB TASK 25-41-51-410-076-G01
D2549020807200

7. Installation of the Side Wall (48D-1)

(a) Attach the fittings 48D-020, 48D-025 with the screws 48D-030, 48D-035 to the aft side wall assembly 48D-010.

(b) Assemble the post assembly 48D-210 as follows:

1 Attach the plates 48D-217 with the screws 48D-225.

2 Attach the plates 48D-215 with the screws 48D-220.

(c) Attach the post assembly 48D-210 with the screws 48D-240, 48D-260, the washers 48D-190 and the caps 48D-250.

(d) Assemble the single door emergency unlocking device assembly 48D-350 as follows:

WARNING: BE CAREFUL WHEN YOU USE MATERIAL NO. 08-007 SEALANT, HIGH TEMPERATURE. OBEY THE MATERIAL MANUFACTURER'S INSTRUCTIONS.

1 Apply the Material No. 08-007 Sealant, High Temperature to the snap catch 48D-400 and to the pin 48D-390 and attach the emergency unlocking device pivot 48D-380, the snap catch 48D-400 and the pin 48D-390 to the emergency unlocking device housing 48D-360.

NOTE: Adjust the snap catch 48D-400 a half turn before stop.

WARNING: BE CAREFUL WHEN YOU USE MATERIAL NO. 08-007 SEALANT, HIGH TEMPERATURE. OBEY THE MATERIAL MANUFACTURER'S INSTRUCTIONS.

2 Apply the Material No. 08-007 Sealant, High Temperature to the bolt 48D-410 and attach the emergency unlocking device strike 48D-370 with the bolt 48D-410 to the emergency unlocking device housing 48D-360.

(e) Attach the single door emergency unlocking device assembly 48D-350 with the screws 48D-420 to the post assembly 48D-210.

(f) Attach the angle 48D-320 with the screws 48D-240 and the washers 48D-190 to the aft side wall assembly 48D-010.

(g) Attach the angles 48D-160 with the screws 48D-180 and the washers 48D-190 to the aft side wall assembly 48D-010.

(h) Attach the oxygen container assy 48D-170 with the screws 48D-180 and the washers 48D-190 to the angles 48D-160.

(i) Attach the ground cable in accordance with the Process and Material Specification PMS 01-04-58 to the oxygen container assy 48D-170.

(j) Attach the angle 48D-130 with the screws 48D-180 and the washers 48D-190 to the aft side wall assembly 48D-010.

(k) Attach the cover oxygen container assy 48D-120 with the screws 48D-140 and the nuts 48D-150 to the angle 48D-130.

(l) Attach the studs 48D-200 to the oxygen container assy 48D-120.

(m) Attach the screws 48D-340 to the aft side wall assembly 48D-010.

(n) Attach the toilet seat cover dispenser 48D-330 to the screws 48D-340.

(o) Attach the support 48D-310 with the screws 48D-245 and the washers 48D-190 to the aft side wall assembly 48D-010.

(p) Install and assemble the handle assembly 48D-270 as follows:

1 Attach the special screws 48D-280 and the special washers 48D-300 to the aft side wall assembly 48D-010.

2 Attach the handle assembly 48D-270 to the aft side wall assembly 48D-010.

3 Attach the security pins 48D-290 to the handle assembly 48D-270.

4 Attach the bushing 48D-305 to the aft side wall assembly 48D-010.

(q) Attach the section 48D-520 with the screws 48D-530 to the aft side wall assembly 48D-010.

(r) Attach the screws 48D-480 and the washers 48D-490 to the mirror assembly 48D-450.

(s) Attach the screws 48D-540 to the aft side wall assembly 48D-010.

(t) Attach the mirror assembly 48D-450 to the screws 48D-540.

(u) Attach the stud 48D-550 to the aft side wall assembly 48D-010.

TASK 25-41-51-400-825-G01

D2549010501000 D2549010504200 D2549010504400 D2549010504800 D2549010507400 D2549010509000 D2549010511200 D2549010512600 D2549010513200 D2549010514200 D2549010601000 D2549010601800 D2549010604000 D2549020503400 D2549020505400 D2549020505800 D2549020601200 D2549020603200 D2549020608800 D2549020706400 D2549030500200 D2549030501600 D2549030502200 D2549030503200 D2549030509000 R225401107-000 R225401107-002

243. Installation of the Side Wall

A. General

This task gives you the installation and assembly procedures of the component.

B. Job Set-up Information

(1) Consumable Materials

REFERENCE	DESIGNATION
08-007	Sealant, High Temperature

Table 7036
Consumable Materials

C. Procedure

WARNING: BE CAREFUL WHEN YOU USE SOLVENTS/CLEANING AGENTS, SEALANTS AND OTHER MATERIALS. OBEY THE MATERIAL MANUFACTURER'S INSTRUCTIONS AND THE LOCAL REGULATIONS. MAKE SURE THAT THERE IS A GOOD FLOW OF AIR THROUGH THE WORK AREA. DO NOT BREATHE THE FUMES. DO NOT SMOKE. DO NOT USE THESE MATERIALS NEAR A FLAME, SPARKS OR SOURCES OF HEAT. USE PROTECTIVE CLOTHING, GOGGLES AND GLOVES. IF YOU GET ONE OF THESE MATERIALS ON YOUR SKIN OR IN YOUR EYES, FLUSH IT AWAY WITH A FLOW OF CLEAN WATER. IF YOU GET ONE OF THESE MATERIALS IN YOUR MOUTH, GET IMMEDIATE MEDICAL AID. IN GENERAL, THESE MATERIALS ARE POISONOUS, FLAMMABLE AND SKIN IRRITANTS.

WARNING: KEEP ALL HYDROCARBONS (FUELS, LUBRICANTS, ETC.) AWAY FROM ALL SOURCES OF OXYGEN. OXYGEN BECOMES EXPLOSIVE WHEN IT TOUCHES HYDROCARBONS.

WARNING: TO PREVENT CONTAMINATION OF THE OXYGEN SYSTEM, MAKE SURE THAT YOUR HANDS AND ALL THE TOOLS ARE CLEAN.

CAUTION: **DO ALL THE WORK ON A CLEAN, SOFT SURFACE TO PREVENT DAMAGE TO THE COMPONENTS.**

CAUTION: **MAKE SURE THAT ALL THE PARTS ARE CLEAN BEFORE YOU ASSEMBLE THEM.**

SUB TASK 25-41-51-410-078-A01
D2549010509000 D2549010513200 D2549010601000 D2549010604000

1. Installation of the Side Wall (48E-1)

   (a) Attach the fittings 48E-020, 48E-030 with the screws 48E-040, 48E-050 to the aft side wall assembly 48E-010.

   (b) Assemble the post assembly 48E-270 as follows:

      1 Attach the screws 48E-280.

   (c) Attach the post assembly 48E-270 with the screws 48E-300, 48E-320, the washers 48E-250 and the caps 48E-310.

   (d) Assemble the single door emergency unlocking device assembly 48E-380 as follows:

      WARNING: **BE CAREFUL WHEN YOU USE MATERIAL NO. 08-007 SEALANT, HIGH TEMPERATURE. OBEY THE MATERIAL MANUFACTURER'S INSTRUCTIONS.**

      1 Apply the Material No. 08-007 Sealant, High Temperature to the snap catch 48E-430 and to the pin 48E-420 and attach the emergency unlocking device pivot 48E-410, the snap catch 48E-430 and the pin 48E-420 to the emergency unlocking device housing 48E-390.

      NOTE: **Adjust the snap catch 48E-430 a half turn before stop.**

      WARNING: **BE CAREFUL WHEN YOU USE MATERIAL NO. 08-007 SEALANT, HIGH TEMPERATURE. OBEY THE MATERIAL MANUFACTURER'S INSTRUCTIONS.**

      2 Apply the Material No. 08-007 Sealant, High Temperature to the bolt 48E-440 and attach the emergency unlocking device strike 48E-400 with the bolt 48E-440 to the emergency unlocking device housing 48E-390.

   (e) Attach the single door emergency unlocking device assembly 48E-380 and the plates 48E-450 with the screws 48E-460, 48E-461 and the nuts 48E-470 to the post assembly 48E-270.

(f) Attach the angle 48E-330 with the screws 48E-340, 48E-350 and the washers 48E-250 to the aft side wall assembly 48E-010.

(g) Attach the angles 48E-220 with the screws 48E-240 and the washers 48E-250 to the aft side wall assembly 48E-010.

(h) Attach the oxygen container assy 48E-230 with the screws 48E-240 and the washers 48E-250 to the angles 48E-220.

(i) Attach the ground cable in accordance with the Process and Material Specification PMS 01-04-58 to the oxygen container assy 48E-230.

(j) Attach the angle 48E-190 with the screws 48E-240 and the washers 48E-250 to the aft side wall assembly 48E-010.

(k) Attach the cover oxygen container assy 48E-180 with the screws 48E-200 and the nuts 48E-210 to the angle 48E-190.

(l) Attach the studs 48E-260 and the washers 48E-250 to the cover oxygen container assy 48E-180.

(m) Attach the support 48E-480 with the screws 48E-490 and the washers 48E-500 to the aft side wall assembly 48E-010.

(n) Install and assemble the handle assembly 48E-140 as follows:

1 Attach the special screws 48E-150 and the special washers 48E-170 to the aft side wall assembly 48E-010.

2 Attach the handle assembly 48E-140 to the aft side wall assembly 48E-010.

3 Attach the security pins 48E-160 to the handle assembly 48E-140.

SUB TASK 25-41-51-410-078-B01
D2549010514200 D2549020603200 D2549020706400

2. Installation of the Side Wall (48E-1)

(a) Attach the fittings 48E-020, 48E-030 with the screws 48E-040, 48E-050 to the aft side wall assembly 48E-010.

(b) Assemble the post assembly 48E-270 as follows:

1 Attach the screws 48E-280.

(c) Attach the post assembly 48E-270 with the screws 48E-300, 48E-320, the washers 48E-250 and the caps 48E-310.

(d) Assemble the single door emergency unlocking device assembly 48E-380 as follows:

WARNING: BE CAREFUL WHEN YOU USE MATERIAL NO. 08-007 SEALANT, HIGH TEMPERATURE. OBEY THE MATERIAL MANUFACTURER'S INSTRUCTIONS.

1 Apply the Material No. 08-007 Sealant, High Temperature to the snap catch 48E-430 and to the pin 48E-420 and attach the emergency unlocking device pivot 48E-410, the snap catch 48E-430 and the pin 48E-420 to the emergency unlocking device housing 48E-390.

NOTE: Adjust the snap catch 48E-430 a half turn before stop.

WARNING: BE CAREFUL WHEN YOU USE MATERIAL NO. 08-007 SEALANT, HIGH TEMPERATURE. OBEY THE MATERIAL MANUFACTURER'S INSTRUCTIONS.

2 Apply the Material No. 08-007 Sealant, High Temperature to the bolt 48E-440 and attach the emergency unlocking device strike 48E-400 with the bolt 48E-440 to the emergency unlocking device housing 48E-390.

(e) Attach the single door emergency unlocking device assembly 48E-380 and the plates 48E-450 with the screws 48E-460, 48E-461 and the nuts 48E-470 to the post assembly 48E-270.

(f) Attach the angle 48E-330 with the screws 48E-340, 48E-350 and the washers 48E-250 to the aft side wall assembly 48E-010.

(g) Attach the angles 48E-220 with the screws 48E-240 and the washers 48E-250 to the aft side wall assembly 48E-010.

(h) Attach the oxygen container assy 48E-230 with the screws 48E-240 and the washers 48E-250 to the angles 48E-220.

(i) Attach the ground cable in accordance with the Process and Material Specification PMS 01-04-58 to the oxygen container assy 48E-230.

(j) Attach the angle 48E-190 with the screws 48E-240 and the washers 48E-250 to the aft side wall assembly 48E-010.

(k) Attach the cover oxygen container assy 48E-180 with the screws 48E-200 and the nuts 48E-210 to the angle 48E-190.

(l) Attach the studs 48E-260 and the washers 48E-250 to the cover oxygen container assy 48E-180.

(m) Attach the screws 48E-370 to the aft side wall assembly 48E-010.

(n) Attach the toilet seat cover dispenser 48E-360 to the screws 48E-370.

(o) Install and assemble the handle assembly 48E-140 as follows:

1 Attach the special screws 48E-150 and the special washers 48E-170 to the aft side wall assembly 48E-010.

2 Attach the handle assembly 48E-140 to the aft side wall assembly 48E-010.

3 Attach the security pins 48E-160 to the handle assembly 48E-140.

SUB TASK 25-41-51-410-078-C01
D2549020608800

3. Installation of the Side Wall (48E-1)

(a) If removed, attach the kick strip 48E-520 to the aft side wall assembly 48E-010.

(b) Attach the fittings 48E-020, 48E-030 with the screws 48E-040, 48E-050 to the aft side wall assembly 48E-010.

(c) Assemble the post assembly 48E-270 as follows:

1 Attach the screws 48E-280.

(d) Attach the post assembly 48E-270 with the screws 48E-300, 48E-320, the washers 48E-250 and the caps 48E-310.

(e) Attach the angle 48E-330 with the screws 48E-340, 48E-350 and the washers 48E-250 to the aft side wall assembly 48E-010.

(f) Attach the angles 48E-220 with the screws 48E-240 and the washers 48E-250 to the aft side wall assembly 48E-010.

(g) Attach the oxygen container assy 48E-230 with the screws 48E-240 and the washers 48E-250 to the angles 48E-220.

(h) Attach the ground cable in accordance with the Process and Material Specification PMS 01-04-58 to the oxygen container assy 48E-230.

(i) Attach the angle 48E-190 with the screws 48E-240 and the washers 48E-250 to the aft side wall assembly 48E-010.

(j) Attach the cover oxygen container assy 48E-180 with the screws 48E-200 and the nuts 48E-210 to the angle 48E-190.

(k) Attach the studs 48E-260 and the washers 48E-250 to the cover oxygen container assy 48E-180.

(l) Attach the screws 48E-370 to the aft side wall assembly 48E-010.

(m) Attach the toilet seat cover dispenser 48E-360 to the screws 48E-370.

(n) Install and assemble the handle assembly 48E-140 as follows:

1 Attach the special screws 48E-150 and the special washers 48E-170 to the aft side wall assembly 48E-010.

2 Attach the handle assembly 48E-140 to the aft side wall assembly 48E-010.

3 Attach the security pins 48E-160 to the handle assembly 48E-140.

SUB TASK 25-41-51-410-078-D01
D2549020601200

4. Installation of the Side Wall (48E-1)

(a) Attach the fittings 48E-020, 48E-030 with the screws 48E-040, 48E-050 to the aft side wall assembly 48E-010.

(b) Assemble the post assembly 48E-270 as follows:

1 Attach the screws 48E-280.

(c) Attach the post assembly 48E-270 with the screws 48E-300, 48E-320, the washers 48E-250 and the caps 48E-310.

(d) Attach the angle 48E-330 with the screws 48E-340, 48E-350 and the washers 48E-250 to the aft side wall assembly 48E-010.

(e) Attach the angles 48E-220 with the screws 48E-240 and the washers 48E-250 to the aft side wall assembly 48E-010.

(f) Attach the oxygen container assy 48E-230 with the screws 48E-240 and the washers 48E-250 to the angles 48E-220.

(g) Attach the ground cable in accordance with the Process and Material Specification PMS 01-04-58 to the oxygen container assy 48E-230.

(h) Attach the angle 48E-190 with the screws 48E-240 and the washers 48E-250 to the aft side wall assembly 48E-010.

(i) Attach the cover oxygen container assy 48E-180 with the screws 48E-200 and the nuts 48E-210 to the angle 48E-190.

(j) Attach the studs 48E-260 and the washers 48E-250 to the cover oxygen container assy 48E-180.

(k) Attach the screws 48E-370 to the aft side wall assembly 48E-010.

(l) Attach the toilet seat cover dispenser 48E-360 to the screws 48E-370.

(m) Install and assemble the handle assembly 48E-140 as follows:

1 Attach the special screws 48E-150 and the special washers 48E-170 to the aft side wall assembly 48E-010.

2 Attach the handle assembly 48E-140 to the aft side wall assembly 48E-010.

3 Attach the security pins 48E-160 to the handle assembly 48E-140.

SUB TASK 25-41-51-410-078-E01
D2549010504200

5. Installation of the Side Wall (48E-1)

(a) Attach the fittings 48E-020, 48E-030 with the screws 48E-040, 48E-050 to the aft side wall assembly 48E-010.

(b) Assemble the post assembly 48E-270 as follows:

1 Attach the screws 48E-280.

(c) Attach the post assembly 48E-270 with the screws 48E-300, 48E-320, the washers 48E-250 and the caps 48E-310.

(d) Assemble the single door emergency unlocking device assembly 48E-380 as follows:

WARNING: **BE CAREFUL WHEN YOU USE MATERIAL NO. 08-007 SEALANT, HIGH TEMPERATURE. OBEY THE MATERIAL MANUFACTURER'S INSTRUCTIONS.**

1 Apply the Material No. 08-007 Sealant, High Temperature to the snap catch 48E-430 and to the pin 48E-420 and attach the emergency unlocking device pivot 48E-410, the snap catch 48E-430 and the pin 48E-420 to the emergency unlocking device housing 48E-390.

NOTE: **Adjust the snap catch 48E-430 a half turn before stop.**

WARNING: **BE CAREFUL WHEN YOU USE MATERIAL NO. 08-007 SEALANT, HIGH TEMPERATURE. OBEY THE MATERIAL MANUFACTURER'S INSTRUCTIONS.**

2 Apply the Material No. 08-007 Sealant, High Temperature to the bolt 48E-440 and attach the emergency unlocking device strike 48E-400 with the bolt 48E-440 to the emergency unlocking device housing 48E-390.

(e) Attach the single door emergency unlocking device assembly 48E-380 and the plates 48E-450 with the screws 48E-460, 48E-461 and the nuts 48E-470 to the post assembly 48E-270.

(f) Attach the angle 48E-330 with the screws 48E-340, 48E-350 and the washers 48E-250 to the aft side wall assembly 48E-010.

(g) Attach the angles 48E-220 with the screws 48E-240 and the washers 48E-250 to the aft side wall assembly 48E-010.

(h) Attach the oxygen container assy 48E-230 with the screws 48E-240 and the washers 48E-250 to the angles 48E-220.

(i) Attach the ground cable in accordance with the Process and Material Specification PMS 01-04-58 to the oxygen container assy 48E-230.

(j) Attach the angle 48E-190 with the screws 48E-240 and the washers 48E-250 to the aft side wall assembly 48E-010.

(k) Attach the cover oxygen container assy 48E-180 with the screws 48E-200 and the nuts 48E-210 to the angle 48E-190.

(l) Attach the studs 48E-260 and the washers 48E-250 to the cover oxygen container assy 48E-180.

(m) Install and assemble the handle assembly 48E-140 as follows:

1 Attach the special screws 48E-150 and the special washers 48E-170 to the aft side wall assembly 48E-010.

2 Attach the handle assembly 48E-140 to the aft side wall assembly 48E-010.

3 Attach the security pins 48E-160 to the handle assembly 48E-140.

SUB TASK 25-41-51-410-078-F01
D2549010504800

6. Installation of the Side Wall (48E-1)

(a) Attach the fittings 48E-020, 48E-030 with the screws 48E-040, 48E-050 to the aft side wall assembly 48E-010.

(b) Assemble the post assembly 48E-270 as follows:

1 Attach the screws 48E-280.

(c) Attach the post assembly 48E-270 with the screws 48E-300, 48E-320, the washers 48E-250 and the caps 48E-310.

(d) Assemble the single door emergency unlocking device assembly 48E-380 as follows:

WARNING: BE CAREFUL WHEN YOU USE MATERIAL NO. 08-007 SEALANT, HIGH TEMPERATURE. OBEY THE MATERIAL MANUFACTURER'S INSTRUCTIONS.

1 Apply the Material No. 08-007 Sealant, High Temperature to the snap catch 48E-430 and to the pin 48E-420 and attach the emergency unlocking device pivot 48E-410, the snap catch 48E-430 and the pin 48E-420 to the emergency unlocking device housing 48E-390.

NOTE: Adjust the snap catch 48E-430 a half turn before stop.

WARNING: BE CAREFUL WHEN YOU USE MATERIAL NO. 08-007 SEALANT, HIGH TEMPERATURE. OBEY THE MATERIAL MANUFACTURER'S INSTRUCTIONS.

2 Apply the Material No. 08-007 Sealant, High Temperature to the bolt 48E-440 and attach the emergency unlocking device strike 48E-400 with the bolt 48E-440 to the emergency unlocking device housing 48E-390.

(e) Attach the single door emergency unlocking device assembly 48E-380 and the plates 48E-450 with the screws 48E-460, 48E-461 and the nuts 48E-470 to the post assembly 48E-270.

(f) Attach the angle 48E-330 with the screws 48E-340, 48E-350 and the washers 48E-250 to the aft side wall assembly 48E-010.

(g) Attach the angles 48E-220 with the screws 48E-240 and the washers 48E-250 to the aft side wall assembly 48E-010.

(h) Attach the oxygen container assy 48E-230 with the screws 48E-240 and the washers 48E-250 to the angles 48E-220.

(i) Attach the ground cable in accordance with the Process and Material Specification PMS 01-04-58 to the oxygen container assy 48E-230.

(j) Attach the angle 48E-190 with the screws 48E-240 and the washers 48E-250 to the aft side wall assembly 48E-010.

(k) Attach the cover oxygen container assy 48E-180 with the screws 48E-200 and the nuts 48E-210 to the angle 48E-190.

(l) Attach the studs 48E-260 and the washers 48E-250 to the cover oxygen container assy 48E-180.

(m) Install and assemble the handle assembly 48E-140 as follows:

1 Attach the special screws 48E-150 and the special washers 48E-170 to the aft side wall assembly 48E-010.

2 Attach the handle assembly 48E-140 to the aft side wall assembly 48E-010.

3 Attach the security pins 48E-160 to the handle assembly 48E-140.

SUB TASK 25-41-51-410-078-G01

D2549010501000 D2549010512600 D2549010601800 D2549020503400 D2549020505400 D2549020505800 D2549030500200 D2549030501600 D2549030502200 D2549030503200 D2549030509000 R225401107-000

7. Installation of the Side Wall (48E-1)

(a) Attach the fittings 48E-020, 48E-030 with the screws 48E-040, 48E-050 to the aft side wall assembly 48E-010.

(b) Assemble the post assembly 48E-270 as follows:

1 Attach the screws 48E-280.

(c) Attach the post assembly 48E-270 with the screws 48E-300, 48E-320, the washers 48E-250 and the caps 48E-310.

(d) Assemble the single door emergency unlocking device assembly 48E-380 as follows:

WARNING: BE CAREFUL WHEN YOU USE MATERIAL NO. 08-007 SEALANT, HIGH TEMPERATURE. OBEY THE MATERIAL MANUFACTURER'S INSTRUCTIONS.

1 Apply the Material No. 08-007 Sealant, High Temperature to the snap catch 48E-430 and to the pin 48E-420 and attach the emergency unlocking device pivot 48E-410, the snap catch 48E-430 and the pin 48E-420 to the emergency unlocking device housing 48E-390.

NOTE: Adjust the snap catch 48E-430 a half turn before stop.

WARNING: BE CAREFUL WHEN YOU USE MATERIAL NO. 08-007 SEALANT, HIGH TEMPERATURE. OBEY THE MATERIAL MANUFACTURER'S INSTRUCTIONS.

2 Apply the Material No. 08-007 Sealant, High Temperature to the bolt 48E-440 and attach the emergency unlocking device strike 48E-400 with the bolt 48E-440 to the emergency unlocking device housing 48E-390.

(e) Attach the single door emergency unlocking device assembly 48E-380 and the plates 48E-450 with the screws 48E-460, 48E-461 and the nuts 48E-470 to the post assembly 48E-270.

(f) Attach the angle 48E-330 with the screws 48E-340, 48E-350 and the washers 48E-250 to the aft side wall assembly 48E-010.

(g) Attach the angles 48E-220 with the screws 48E-240 and the washers 48E-250 to the aft side wall assembly 48E-010.

(h) Attach the oxygen container assy 48E-230 with the screws 48E-240 and the washers 48E-250 to the angles 48E-220.

(i) Attach the ground cable in accordance with the Process and Material Specification PMS 01-04-58 to the oxygen container assy 48E-230.

(j) Attach the angle 48E-190 with the screws 48E-240 and the washers 48E-250 to the aft side wall assembly 48E-010.

(k) Attach the cover oxygen container assy 48E-180 with the screws 48E-200 and the nuts 48E-210 to the angle 48E-190.

(l) Attach the studs 48E-260 and the washers 48E-250 to the cover oxygen container assy 48E-180.

(m) Install and assemble the handle assembly 48E-140 as follows:

1 Attach the special screws 48E-150 and the special washers 48E-170 to the aft side wall assembly 48E-010.

2 Attach the handle assembly 48E-140 to the aft side wall assembly 48E-010.

3 Attach the security pins 48E-160 to the handle assembly 48E-140.

SUB TASK 25-41-51-410-078-H01
D2549010511200 R225401107-002

8. Installation of the Side Wall (48E-1)

(a) Attach the fittings 48E-020, 48E-030 with the screws 48E-040, 48E-050 to the aft side wall assembly 48E-010.

(b) Assemble the post assembly 48E-270 as follows:

1 Attach the screws 48E-280.

(c) Attach the post assembly 48E-270 with the screws 48E-300, 48E-320, the washers 48E-250 and the caps 48E-310.

(d) Assemble the single door emergency unlocking device assembly 48E-380 as follows:

WARNING: BE CAREFUL WHEN YOU USE MATERIAL NO. 08-007 SEALANT, HIGH TEMPERATURE. OBEY THE MATERIAL MANUFACTURER'S INSTRUCTIONS.

1 Apply the Material No. 08-007 Sealant, High Temperature to the snap catch 48E-430 and to the pin 48E-420 and attach the emergency unlocking device pivot 48E-410, the snap catch 48E-430 and the pin 48E-420 to the emergency unlocking device housing 48E-390.

NOTE: Adjust the snap catch 48E-430 a half turn before stop.

WARNING: **BE CAREFUL WHEN YOU USE MATERIAL NO. 08-007 SEALANT, HIGH TEMPERATURE. OBEY THE MATERIAL MANUFACTURER'S INSTRUCTIONS.**

2 Apply the Material No. 08-007 Sealant, High Temperature to the bolt 48E-440 and attach the emergency unlocking device strike 48E-400 with the bolt 48E-440 to the emergency unlocking device housing 48E-390.

(e) Attach the single door emergency unlocking device assembly 48E-380 and the plates 48E-450 with the screws 48E-460, 48E-461 and the nuts 48E-470 to the post assembly 48E-270.

(f) Attach the angle 48E-330 with the screws 48E-340, 48E-350 and the washers 48E-250 to the aft side wall assembly 48E-010.

(g) Attach the angles 48E-220 with the screws 48E-240 and the washers 48E-250 to the aft side wall assembly 48E-010.

(h) Attach the oxygen container assy 48E-230 with the screws 48E-240, 48E-245 and the washers 48E-250, 48E-255 to the angles 48E-220.

(i) Attach the ground cable in accordance with the Process and Material Specification PMS 01-04-58 to the oxygen container assy 48E-230.

(j) Attach the angle 48E-190 with the screws 48E-240 and the washers 48E-250 to the aft side wall assembly 48E-010.

(k) Attach the cover oxygen container assy 48E-180 with the screws 48E-200 and the nuts 48E-210 to the angle 48E-190.

(l) Attach the studs 48E-260 and the washers 48E-250 to the cover oxygen container assy 48E-180.

(m) Install and assemble the handle assembly 48E-140 as follows:

1 Attach the special screws 48E-150 and the special washers 48E-170 to the aft side wall assembly 48E-010.

2 Attach the handle assembly 48E-140 to the aft side wall assembly 48E-010.

3 Attach the security pins 48E-160 to the handle assembly 48E-140.

SUB TASK 25-41-51-410-078-J01
D2549010504400 D2549010507400

9. Installation of the Side Wall (48E-1)

(a) Attach the fittings 48E-020, 48E-030 with the screws 48E-040, 48E-050 to the aft side wall assembly 48E-010.

(b) Assemble the post assembly 48E-270 as follows:

1 Attach the screws 48E-280.

(c) Attach the post assembly 48E-270 with the screws 48E-300, 48E-320, the washers 48E-250 and the caps 48E-310.

(d) Attach the angle 48E-330 with the screws 48E-340, 48E-350 and the washers 48E-250 to the aft side wall assembly 48E-010.

(e) Attach the angles 48E-220 with the screws 48E-240 and the washers 48E-250 to the aft side wall assembly 48E-010.

(f) Attach the oxygen container assy 48E-230 with the screws 48E-240 and the washers 48E-250 to the angles 48E-220.

(g) Attach the ground cable in accordance with the Process and Material Specification PMS 01-04-58 to the oxygen container assy 48E-230.

(h) Attach the angle 48E-190 with the screws 48E-240 and the washers 48E-250 to the aft side wall assembly 48E-010.

(i) Attach the cover oxygen container assy 48E-180 with the screws 48E-200 and the nuts 48E-210 to the angle 48E-190.

(j) Attach the studs 48E-260 and the washers 48E-250 to the cover oxygen container assy 48E-180.

(k) Install and assemble the handle assembly 48E-140 as follows:

1 Attach the special screws 48E-150 and the special washers 48E-170 to the aft side wall assembly 48E-010.

2 Attach the handle assembly 48E-140 to the aft side wall assembly 48E-010.

3 Attach the security pins 48E-160 to the handle assembly 48E-140.

TASK 25-41-51-400-825-H01
D2549020300000 D2549020412800 D2549020802600 D2549030410200 R225401675-000 R225401811-000

244. Installation of the Side Wall

A. General

This task gives you the installation and assembly procedures of the component.

B. Job Set-up Information
(1) Consumable Materials

REFERENCE	DESIGNATION
08-007	Sealant, High Temperature

Table 7037
Consumable Materials

C. Procedure

WARNING: BE CAREFUL WHEN YOU USE SOLVENTS/CLEANING AGENTS, SEALANTS AND OTHER MATERIALS. OBEY THE MATERIAL MANUFACTURER'S INSTRUCTIONS AND THE LOCAL REGULATIONS. MAKE SURE THAT THERE IS A GOOD FLOW OF AIR THROUGH THE WORK AREA. DO NOT BREATHE THE FUMES. DO NOT SMOKE. DO NOT USE THESE MATERIALS NEAR A FLAME, SPARKS OR SOURCES OF HEAT. USE PROTECTIVE CLOTHING, GOGGLES AND GLOVES. IF YOU GET ONE OF THESE MATERIALS ON YOUR SKIN OR IN YOUR EYES, FLUSH IT AWAY WITH A FLOW OF CLEAN WATER. IF YOU GET ONE OF THESE MATERIALS IN YOUR MOUTH, GET IMMEDIATE MEDICAL AID. IN GENERAL, THESE MATERIALS ARE POISONOUS, FLAMMABLE AND SKIN IRRITANTS.

WARNING: KEEP ALL HYDROCARBONS (FUELS, LUBRICANTS, ETC.) AWAY FROM ALL SOURCES OF OXYGEN. OXYGEN BECOMES EXPLOSIVE WHEN IT TOUCHES HYDROCARBONS.

WARNING: TO PREVENT CONTAMINATION OF THE OXYGEN SYSTEM, MAKE SURE THAT YOUR HANDS AND ALL THE TOOLS ARE CLEAN.

CAUTION: DO ALL THE WORK ON A CLEAN, SOFT SURFACE TO PREVENT DAMAGE TO THE COMPONENTS.

CAUTION: MAKE SURE THAT ALL THE PARTS ARE CLEAN BEFORE YOU ASSEMBLE THEM.

SUB TASK 25-41-51-410-079-A01

D2549020300000 D2549020412800 D2549030410200 R225401675-000 R225401811-000

1. Installation of the Side Wall (48F-1)

   (a) Attach the fittings 48F-020, 48F-030 with the screws 48F-040, 48F-050 to the aft side wall assembly 48F-010.

   (b) Assemble the post assembly 48F-270 as follows:

      1 Attach the screws 48F-280.

   (c) Attach the post assembly 48F-270 with the screws 48F-300, 48F-320, the washers 48F-250 and the caps 48F-310.

   (d) Assemble the single door emergency unlocking device assembly 48F-360 as follows:

      WARNING: BE CAREFUL WHEN YOU USE MATERIAL NO. 08-007 SEALANT, HIGH TEMPERATURE. OBEY THE MATERIAL MANUFACTURER'S INSTRUCTIONS.

      1 Apply the Material No. 08-007 Sealant, High Temperature to the snap catch 48F-410 and to the pin 48F-400 and attach the emergency unlocking device pivot 48F-390, the snap catch 48F-410 and the pin 48F-400 to the emergency unlocking device housing 48F-370.

      NOTE: Adjust the snap catch 48F-410 a half turn before stop.

      WARNING: BE CAREFUL WHEN YOU USE MATERIAL NO. 08-007 SEALANT, HIGH TEMPERATURE. OBEY THE MATERIAL MANUFACTURER'S INSTRUCTIONS.

      2 Apply the Material No. 08-007 Sealant, High Temperature to the bolt 48F-420 and attach the emergency unlocking device strike 48F-380 with the bolt 48F-420 to the emergency unlocking device housing 48F-370.

   (e) Attach the single door emergency unlocking device assembly 48F-360 with the screws 48F-430 to the post assembly 48F-270.

   (f) Attach the angle 48F-350 with the screws 48F-300 and the washers 48F-250 to the aft side wall assembly 48F-010.

   (g) Attach the angles 48F-220 with the screws 48F-240 and the washers 48F-250 to the aft side wall assembly 48F-010.

(h) Attach the oxygen container assy 48F-230 with the screws 48F-240, 48F-245 and the washers 48F-250 to the angles 48F-220.

(i) Attach the ground cable in accordance with the Process and Material Specification PMS 01-04-58 to the oxygen container assy 48F-230.

(j) Attach the angle 48F-190 with the screws 48F-240 and the washers 48F-250 to the aft side wall assembly 48F-010.

(k) Attach the cover oxygen container assy 48F-180 with the screws 48F-200 and the nuts 48F-210 to the angle 48F-190.

(l) Attach the studs 48F-260 and the washers 48F-250 to the cover oxygen container assy 48F-180.

(m) Attach the section 48F-440 with the screws 48F-200 to the aft side wall assembly 48F-010.

(n) Attach the screws 48F-340 to the aft side wall assembly 48F-010.

(o) Attach the mirror assembly 48F-450 to the screws 48F-340.

(p) Attach the stud 48F-480.

(q) Attach the screws 48F-340 to the aft side wall assembly 48F-010.

(r) Attach the toilet seat cover dispenser 48F-330 to the screws 48F-340.

(s) Install and assemble the handle assemblies 48F-140 as follows:

1 Attach the special screws 48F-150 and the special washers 48F-170 to the aft side wall assembly 48F-010.

2 Attach the handle assemblies 48F-140 to the aft side wall assembly 48F-010.

3 Attach the security pins 48F-160 to the handle assemblies 48F-140.

SUB TASK 25-41-51-410-079-B01
D2549020802600

2. Installation of the Side Wall (48F-1)

(a) Attach the fittings 48F-020, 48F-030 with the screws 48F-040, 48F-050 to the aft side wall assembly 48F-010.

(b) Assemble the post assembly 48F-270 as follows:

1 Attach the screws 48F-280.

(c) Attach the post assembly 48F-270 with the screws 48F-300, 48F-320, the washers 48F-250 and the caps 48F-310.

(d) Attach the angle 48F-350 with the screws 48F-300 and the washers 48F-250 to the aft side wall assembly 48F-010.

(e) Attach the angles 48F-220 with the screws 48F-240 and the washers 48F-250 to the aft side wall assembly 48F-010.

(f) Attach the oxygen container assy 48F-230 with the screws 48F-240 and the washers 48F-250 to the angles 48F-220.

(g) Attach the ground cable in accordance with the Process and Material Specification PMS 01-04-58 to the oxygen container assy 48F-230.

(h) Attach the angle 48F-190 with the screws 48F-240 and the washers 48F-250 to the aft side wall assembly 48F-010.

(i) Attach the cover oxygen container assy 48F-180 with the screws 48F-200 and the nuts 48F-210 to the angle 48F-190.

(j) Attach the studs 48F-260 and the washers 48F-250 to the cover oxygen container assy 48F-180.

(k) Attach the stud 48F-480.

(l) Attach the screws 48F-340 to the aft side wall assembly 48F-010.

(m) Attach the toilet seat cover dispenser 48F-330 to the screws 48F-340.

(n) Install and assemble the handle assemblies 48F-140 as follows:

1 Attach the special screws 48F-150 and the special washers 48F-170 to the aft side wall assembly 48F-010.

2 Attach the handle assemblies 48F-140 to the aft side wall assembly 48F-010.

3 Attach the security pins 48F-160 to the handle assemblies 48F-140.

TASK 25-41-51-400-825-J01

D2549010401000 D2549010403200 D2549010403400 D2549010404600 D2549010404800 D2549010610600 D2549020400800 D2549020401000 D2549020402200 D2549020403200 D2549020403400 D2549020406000 D2549020406400 D2549020407400 D2549020408200 D2549020809600 D2549030408600 D2549030409200 D2549030409400 D2549030409600 D2549030410000 D2549030414000 D2549030704800 D2549040500600 R225401136-006 R225401136-012 R225401136-024 R225401183-004 R225401183-006 R225401649-000 R225401671-000 R225401671-002 R225401673-000 R225401685-000 R225401685-002

245. Installation of the Side Wall

A. General

This task gives you the installation and assembly procedures of the component.

B. Job Set-up Information

(1) Consumable Materials

REFERENCE	DESIGNATION
08-007	Sealant, High Temperature

Table 7038
Consumable Materials

C. Procedure

WARNING: **BE CAREFUL WHEN YOU USE SOLVENTS/CLEANING AGENTS, SEALANTS AND OTHER MATERIALS. OBEY THE MATERIAL MANUFACTURER'S INSTRUCTIONS AND THE LOCAL REGULATIONS. MAKE SURE THAT THERE IS A GOOD FLOW OF AIR THROUGH THE WORK AREA. DO NOT BREATHE THE FUMES. DO NOT SMOKE. DO NOT USE THESE MATERIALS NEAR A FLAME, SPARKS OR SOURCES OF HEAT. USE PROTECTIVE CLOTHING, GOGGLES AND GLOVES. IF YOU GET ONE OF THESE MATERIALS ON YOUR SKIN OR IN YOUR EYES, FLUSH IT AWAY WITH A FLOW OF CLEAN WATER. IF YOU GET ONE OF THESE MATERIALS IN YOUR MOUTH, GET IMMEDIATE MEDICAL AID. IN GENERAL, THESE MATERIALS ARE POISONOUS, FLAMMABLE AND SKIN IRRITANTS.**

WARNING: **KEEP ALL HYDROCARBONS (FUELS, LUBRICANTS, ETC.) AWAY FROM ALL SOURCES OF OXYGEN. OXYGEN BECOMES EXPLOSIVE WHEN IT TOUCHES HYDROCARBONS.**

WARNING: **TO PREVENT CONTAMINATION OF THE OXYGEN SYSTEM, MAKE SURE THAT YOUR HANDS AND ALL THE TOOLS ARE CLEAN.**

CAUTION: **DO ALL THE WORK ON A CLEAN, SOFT SURFACE TO PREVENT DAMAGE TO THE COMPONENTS.**

CAUTION: **MAKE SURE THAT ALL THE PARTS ARE CLEAN BEFORE YOU ASSEMBLE THEM.**

SUB TASK 25-41-51-410-080-A01
D2549030409600 D2549030414000 D2549030704800 R225401671-000 R225401671-002

1. Installation of the Side Wall (48G-1)

   (a) Attach the fittings 48G-020, 48G-030 with the screws 48G-040, 48G-050 to the aft side wall assembly 48G-010.

   (b) Assemble the post assembly 48G-270 as follows:

      1 Attach the screws 48G-280.

   (c) Attach the post assembly 48G-270 with the screws 48G-300, 48G-320, the washers 48G-250 and the caps 48G-310.

   (d) Assemble the single door emergency unlocking device assembly 48G-380 as follows:

      WARNING: **BE CAREFUL WHEN YOU USE MATERIAL NO. 08-007 SEALANT, HIGH TEMPERATURE. OBEY THE MATERIAL MANUFACTURER'S INSTRUCTIONS.**

      1 Apply the Material No. 08-007 Sealant, High Temperature to the snap catch 48G-430 and to the pin 48G-420 and attach the emergency unlocking device pivot 48G-410, the snap catch 48G-430 and the pin 48G-420 to the emergency unlocking device housing 48G-390.

      NOTE: **Adjust the snap catch 48G-430 a half turn before stop.**

      WARNING: **BE CAREFUL WHEN YOU USE MATERIAL NO. 08-007 SEALANT, HIGH TEMPERATURE. OBEY THE MATERIAL MANUFACTURER'S INSTRUCTIONS.**

      2 Apply the Material No. 08-007 Sealant, High Temperature to the bolt 48G-440 and attach the emergency unlocking device strike 48G-400 with the bolt 48G-440 to the emergency unlocking device housing 48G-390.

   (e) Attach the single door emergency unlocking device assembly 48G-380 with the screws 48G-371 to the post assembly 48G-270.

(f) Attach the angle 48G-350 with the screws 48G-300 and the washers 48G-250 to the aft side wall assembly 48G-010.

(g) Attach the angles 48G-220 with the screws 48G-240 and the washers 48G-250 to the aft side wall assembly 48G-010.

(h) Attach the oxygen container assy 48G-230 with the screws 48G-240 and the washers 48G-250 to the angles 48G-220.

(i) Attach the ground cable in accordance with the Process and Material Specification PMS 01-04-58 to the oxygen container assy 48G-230.

(j) Attach the angle 48G-190 with the screws 48G-240 and the washers 48G-250 to the aft side wall assembly 48G-010.

(k) Attach the cover oxygen container assy 48G-180 with the screws 48G-200 and the nuts 48G-210 to the angle 48G-190.

(l) Attach the studs 48G-260 and the washers 48G-250 to the cover oxygen container assy 48G-180.

(m) Install and assemble the handle assemblies 48G-450 as follows:

1 Attach the screws 48G-470 and the washers 48G-480 to the aft side wall assembly 48G-010.

2 Attach the handle 48G-460 to the aft side wall assembly 48G-010.

3 Attach the setscrews 48G-490 to the handle 48G-460.

SUB TASK 25-41-51-410-080-B01
D2549020406000 D2549030410000

2. Installation of the Side Wall (48G-1)

(a) Attach the fittings 48G-020, 48G-030 with the screws 48G-040, 48G-050 to the aft side wall assembly 48G-010.

(b) Assemble the post assembly 48G-270 as follows:

1 Attach the screws 48G-280.

(c) Attach the post assembly 48G-270 with the screws 48G-300, 48G-320, the washers 48G-250 and the caps 48G-310.

(d) Assemble the single door emergency unlocking device assembly 48G-380 as follows:

WARNING: BE CAREFUL WHEN YOU USE MATERIAL NO. 08-007 SEALANT, HIGH TEMPERATURE. OBEY THE MATERIAL MANUFACTURER'S INSTRUCTIONS.

1 Apply the Material No. 08-007 Sealant, High Temperature to the snap catch 48G-430 and to the pin 48G-420 and attach the emergency unlocking device pivot 48G-410, the snap catch 48G-430 and the pin 48G-420 to the emergency unlocking device housing 48G-390.

NOTE: Adjust the snap catch 48G-430 a half turn before stop.

WARNING: BE CAREFUL WHEN YOU USE MATERIAL NO. 08-007 SEALANT, HIGH TEMPERATURE. OBEY THE MATERIAL MANUFACTURER'S INSTRUCTIONS.

2 Apply the Material No. 08-007 Sealant, High Temperature to the bolt 48G-440 and attach the emergency unlocking device strike 48G-400 with the bolt 48G-440 to the emergency unlocking device housing 48G-390.

(e) Attach the single door emergency unlocking device assembly 48G-380 with the screws 48G-371 to the post assembly 48G-270.

(f) Attach the angle 48G-350 with the screws 48G-300 and the washers 48G-250 to the aft side wall assembly 48G-010.

(g) Attach the angles 48G-220 with the screws 48G-240 and the washers 48G-250 to the aft side wall assembly 48G-010.

(h) Attach the oxygen container assy 48G-230 with the screws 48G-240 and the washers 48G-250 to the angles 48G-220.

(i) Attach the ground cable in accordance with the Process and Material Specification PMS 01-04-58 to the oxygen container assy 48G-230.

(j) Attach the angle 48G-190 with the screws 48G-240 and the washers 48G-250 to the aft side wall assembly 48G-010.

(k) Attach the cover oxygen container assy 48G-180 with the screws 48G-200 and the nuts 48G-210 to the angle 48G-190.

(l) Attach the studs 48G-260 and the washers 48G-250 to the cover oxygen container assy 48G-180.

(m) Attach the coat hook 48G-360 with the screw 48G-370.

(n) Attach the screws 48G-340 to the aft side wall assembly 48G-010.

(o) Attach the toilet seat cover dispenser 48G-330 to the screws 48G-340.

(p) Install and assemble the handle assemblies 48G-140 as follows:

1 Attach the special screws 48G-150 and the special washers 48G-170 to the aft side wall assembly 48G-010.

2 Attach the handle assemblies 48G-140 to the aft side wall assembly 48G-010.

3 Attach the security pins 48G-160 to the handle assemblies 48G-140.

SUB TASK 25-41-51-410-080-C01
D2549020400800 D2549020408200

3. Installation of the Side Wall (48G-1)

(a) Attach the fittings 48G-020, 48G-030 with the screws 48G-040, 48G-050 to the aft side wall assembly 48G-010.

(b) Assemble the post assembly 48G-270 as follows:

1 Attach the screws 48G-280.

(c) Attach the post assembly 48G-270 with the screws 48G-300, 48G-320, the washers 48G-250 and the caps 48G-310.

(d) Assemble the single door emergency unlocking device assembly 48G-380 as follows:

WARNING: BE CAREFUL WHEN YOU USE MATERIAL NO. 08-007 SEALANT, HIGH TEMPERATURE. OBEY THE MATERIAL MANUFACTURER'S INSTRUCTIONS.

1 Apply the Material No. 08-007 Sealant, High Temperature to the snap catch 48G-430 and to the pin 48G-420 and attach the emergency unlocking device pivot 48G-410, the snap catch 48G-430 and the pin 48G-420 to the emergency unlocking device housing 48G-390.

NOTE: Adjust the snap catch 48G-430 a half turn before stop.

WARNING: **BE CAREFUL WHEN YOU USE MATERIAL NO. 08-007 SEALANT, HIGH TEMPERATURE. OBEY THE MATERIAL MANUFACTURER'S INSTRUCTIONS.**

2 Apply the Material No. 08-007 Sealant, High Temperature to the bolt 48G-440 and attach the emergency unlocking device strike 48G-400 with the bolt 48G-440 to the emergency unlocking device housing 48G-390.

(e) Attach the single door emergency unlocking device assembly 48G-380 with the screws 48G-371 to the post assembly 48G-270.

(f) Attach the angle 48G-350 with the screws 48G-300 and the washers 48G-250 to the aft side wall assembly 48G-010.

(g) Attach the angles 48G-220 with the screws 48G-240 and the washers 48G-250 to the aft side wall assembly 48G-010.

(h) Attach the oxygen container assy 48G-230 with the screws 48G-240 and the washers 48G-250 to the angles 48G-220.

(i) Attach the ground cable in accordance with the Process and Material Specification PMS 01-04-58 to the oxygen container assy 48G-230.

(j) Attach the angle 48G-190 with the screws 48G-240 and the washers 48G-250 to the aft side wall assembly 48G-010.

(k) Attach the cover oxygen container assy 48G-180 with the screws 48G-200 and the nuts 48G-210 to the angle 48G-190.

(l) Attach the studs 48G-260 and the washers 48G-250 to the cover oxygen container assy 48G-180.

(m) Attach the coat hook 48G-360 with the screw 48G-370.

(n) Attach the screws 48G-340 to the aft side wall assembly 48G-010.

(o) Attach the toilet seat cover dispenser 48G-330 to the screws 48G-340.

(p) Install and assemble the handle assemblies 48G-140 as follows:

1 Attach the special screws 48G-150 and the special washers 48G-170 to the aft side wall assembly 48G-010.

2 Attach the handle assemblies 48G-140 to the aft side wall assembly 48G-010.

3 Attach the security pins 48G-160 to the handle assemblies 48G-140.

SUB TASK 25-41-51-410-080-D01
D2549030408600

4. Installation of the Side Wall (48G-1)

(a) Attach the fittings 48G-020, 48G-030 with the screws 48G-040, 48G-050 to the aft side wall assembly 48G-010.

(b) Assemble the post assembly 48G-270 as follows:

1 Attach the screws 48G-280.

(c) Attach the post assembly 48G-270 with the screws 48G-300, 48G-320, the washers 48G-250 and the caps 48G-310.

(d) Attach the angle 48G-350 with the screws 48G-300 and the washers 48G-250 to the aft side wall assembly 48G-010.

(e) Attach the angles 48G-220 with the screws 48G-240 and the washers 48G-250 to the aft side wall assembly 48G-010.

(f) Attach the oxygen container assy 48G-230 with the screws 48G-240 and the washers 48G-250 to the angles 48G-220.

(g) Attach the ground cable in accordance with the Process and Material Specification PMS 01-04-58 to the oxygen container assy 48G-230.

(h) Attach the angle 48G-190 with the screws 48G-240 and the washers 48G-250 to the aft side wall assembly 48G-010.

(i) Attach the cover oxygen container assy 48G-180 with the screws 48G-200 and the nuts 48G-210 to the angle 48G-190.

(j) Attach the studs 48G-260 and the washers 48G-250 to the cover oxygen container assy 48G-180.

(k) Install and assemble the handle assemblies 48G-140 as follows:

1 Attach the special screws 48G-150 and the special washers 48G-170 to the aft side wall assembly 48G-010.

2 Attach the handle assemblies 48G-140 to the aft side wall assembly 48G-010.

3 Attach the security pins 48G-160 to the handle assemblies 48G-140.

SUB TASK 25-41-51-410-080-E01
D2549010403400 D2549020402200 D2549020403200 D2549020407400 D2549040500600 R225401673-000

5. Installation of the Side Wall (48G-1)

(a) Attach the fittings 48G-020, 48G-030 with the screws 48G-040, 48G-050 to the aft side wall assembly 48G-010.

(b) Assemble the post assembly 48G-270 as follows:

1 Attach the screws 48G-280.

(c) Attach the post assembly 48G-270 with the screws 48G-300, 48G-320, the washers 48G-250 and the caps 48G-310.

(d) Assemble the single door emergency unlocking device assembly 48G-380 as follows:

WARNING: BE CAREFUL WHEN YOU USE MATERIAL NO. 08-007 SEALANT, HIGH TEMPERATURE. OBEY THE MATERIAL MANUFACTURER'S INSTRUCTIONS.

1 Apply the Material No. 08-007 Sealant, High Temperature to the snap catch 48G-430 and to the pin 48G-420 and attach the emergency unlocking device pivot 48G-410, the snap catch 48G-430 and the pin 48G-420 to the emergency unlocking device housing 48G-390.

NOTE: Adjust the snap catch 48G-430 a half turn before stop.

WARNING: BE CAREFUL WHEN YOU USE MATERIAL NO. 08-007 SEALANT, HIGH TEMPERATURE. OBEY THE MATERIAL MANUFACTURER'S INSTRUCTIONS.

2 Apply the Material No. 08-007 Sealant, High Temperature to the bolt 48G-440 and attach the emergency unlocking device strike 48G-400 with the bolt 48G-440 to the emergency unlocking device housing 48G-390.

(e) Attach the single door emergency unlocking device assembly 48G-380 with the screws 48G-371 to the post assembly 48G-270.

(f) Attach the angle 48G-350 with the screws 48G-300 and the washers 48G-250 to the aft side wall assembly 48G-010.

(g) Attach the angles 48G-220 with the screws 48G-240 and the washers 48G-250 to the aft side wall assembly 48G-010.

(h) Attach the oxygen container assy 48G-230 with the screws 48G-240, 48G-242 and the washers 48G-250 to the angles 48G-220.

(i) Attach the ground cable in accordance with the Process and Material Specification PMS 01-04-58 to the oxygen container assy 48G-230.

(j) Attach the angle 48G-190 with the screws 48G-240 and the washers 48G-250 to the aft side wall assembly 48G-010.

(k) Attach the cover oxygen container assy 48G-180 with the screws 48G-200 and the nuts 48G-210 to the angle 48G-190.

(l) Attach the studs 48G-260 and the washers 48G-250 to the cover oxygen container assy 48G-180.

(m) Attach the screws 48G-340 to the aft side wall assembly 48G-010.

(n) Attach the toilet seat cover dispenser 48G-330 to the screws 48G-340.

(o) Install and assemble the handle assemblies 48G-140 as follows:

1 Attach the special screws 48G-150 and the special washers 48G-170 to the aft side wall assembly 48G-010.

2 Attach the handle assemblies 48G-140 to the aft side wall assembly 48G-010.

3 Attach the security pins 48G-160 to the handle assemblies 48G-140.

SUB TASK 25-41-51-410-080-F01
D2549010403200 D2549010404600 D2549010404800 D2549010610600 R225401183-004 R225401183-006 R225401685-000 R225401685-002

6. Installation of the Side Wall (48G-1)

(a) Attach the fittings 48G-020, 48G-030 with the screws 48G-040, 48G-050 to the aft side wall assembly 48G-010.

(b) Assemble the post assembly 48G-270 as follows:

1 Attach the screws 48G-280.

(c) Attach the post assembly 48G-270 with the screws 48G-300, 48G-320, the washers 48G-250 and the caps 48G-310.

(d) Assemble the single door emergency unlocking device assembly 48G-380 as follows:

WARNING: BE CAREFUL WHEN YOU USE MATERIAL NO. 08-007 SEALANT, HIGH TEMPERATURE. OBEY THE MATERIAL MANUFACTURER'S INSTRUCTIONS.

1 Apply the Material No. 08-007 Sealant, High Temperature to the snap catch 48G-430 and to the pin 48G-420 and attach the emergency unlocking device pivot 48G-410, the snap catch 48G-430 and the pin 48G-420 to the emergency unlocking device housing 48G-390.

NOTE: Adjust the snap catch 48G-430 a half turn before stop.

WARNING: BE CAREFUL WHEN YOU USE MATERIAL NO. 08-007 SEALANT, HIGH TEMPERATURE. OBEY THE MATERIAL MANUFACTURER'S INSTRUCTIONS.

2 Apply the Material No. 08-007 Sealant, High Temperature to the bolt 48G-440 and attach the emergency unlocking device strike 48G-400 with the bolt 48G-440 to the emergency unlocking device housing 48G-390.

(e) Attach the single door emergency unlocking device assembly 48G-380 with the screws 48G-371 to the post assembly 48G-270.

(f) Attach the angle 48G-350 with the screws 48G-300 and the washers 48G-250 to the aft side wall assembly 48G-010.

(g) Attach the angles 48G-220 with the screws 48G-240 and the washers 48G-250 to the aft side wall assembly 48G-010.

(h) Attach the oxygen container assy 48G-230 with the screws 48G-240, 48G-242 and the washers 48G-250 to the angles 48G-220.

(i) Attach the ground cable in accordance with the Process and Material Specification PMS 01-04-58 to the oxygen container assy 48G-230.

(j) Attach the angle 48G-190 with the screws 48G-240 and the washers 48G-250 to the aft side wall assembly 48G-010.

(k) Attach the cover oxygen container assy 48G-180 with the screws 48G-200 and the nuts 48G-210 to the angle 48G-190.

(l) Attach the studs 48G-260 and the washers 48G-250 to the cover oxygen container assy 48G-180.

(m) Attach the screws 48G-340 to the aft side wall assembly 48G-010.

(n) Attach the toilet seat cover dispenser 48G-330 to the screws 48G-340.

(o) Install and assemble the handle assemblies 48G-140 as follows:

1 Attach the special screws 48G-150 and the special washers 48G-170 to the aft side wall assembly 48G-010.

2 Attach the handle assemblies 48G-140 to the aft side wall assembly 48G-010.

3 Attach the security pins 48G-160 to the handle assemblies 48G-140.

SUB TASK 25-41-51-410-080-G01
D2549020403400 D2549030409200 R225401136-006 R225401136-012 R225401136-024

7. Installation of the Side Wall (48G-1)

(a) Attach the fittings 48G-020, 48G-030 with the screws 48G-040, 48G-050 to the aft side wall assembly 48G-010.

(b) Assemble the post assembly 48G-270 as follows:

1 Attach the screws 48G-280.

(c) Attach the post assembly 48G-270 with the screws 48G-300, 48G-320, the washers 48G-250 and the caps 48G-310.

(d) Assemble the single door emergency unlocking device assembly 48G-380 as follows:

WARNING: BE CAREFUL WHEN YOU USE MATERIAL NO. 08-007 SEALANT, HIGH TEMPERATURE. OBEY THE MATERIAL MANUFACTURER'S INSTRUCTIONS.

1 Apply the Material No. 08-007 Sealant, High Temperature to the snap catch 48G-430 and to the pin 48G-420 and attach the emergency unlocking device pivot 48G-410, the snap catch 48G-430 and the pin 48G-420 to the emergency unlocking device housing 48G-390.

NOTE: Adjust the snap catch 48G-430 a half turn before stop.

WARNING: **BE CAREFUL WHEN YOU USE MATERIAL NO. 08-007 SEALANT, HIGH TEMPERATURE. OBEY THE MATERIAL MANUFACTURER'S INSTRUCTIONS.**

2 Apply the Material No. 08-007 Sealant, High Temperature to the bolt 48G-440 and attach the emergency unlocking device strike 48G-400 with the bolt 48G-440 to the emergency unlocking device housing 48G-390.

(e) Attach the single door emergency unlocking device assembly 48G-380 with the screws 48G-371 to the post assembly 48G-270.

(f) Attach the angle 48G-350 with the screws 48G-300 and the washers 48G-250 to the aft side wall assembly 48G-010.

(g) Attach the angles 48G-220 with the screws 48G-240 and the washers 48G-250 to the aft side wall assembly 48G-010.

(h) Attach the oxygen container assy 48G-230 with the screws 48G-240, 48G-242 and the washers 48G-250 to the angles 48G-220.

(i) Attach the ground cable in accordance with the Process and Material Specification PMS 01-04-58 to the oxygen container assy 48G-230.

(j) Attach the angle 48G-190 with the screws 48G-240 and the washers 48G-250 to the aft side wall assembly 48G-010.

(k) Attach the cover oxygen container assy 48G-180 with the screws 48G-200 and the nuts 48G-210 to the angle 48G-190.

(l) Attach the studs 48G-260 and the washers 48G-250 to the cover oxygen container assy 48G-180.

(m) Install and assemble the handle assemblies 48G-140 as follows:

1 Attach the special screws 48G-150 and the special washers 48G-170 to the aft side wall assembly 48G-010.

2 Attach the handle assemblies 48G-140 to the aft side wall assembly 48G-010.

3 Attach the security pins 48G-160 to the handle assemblies 48G-140.

SUB TASK 25-41-51-410-080-H01
D2549010401000 D2549020401000 D2549020406400 R225401649-000

8. Installation of the Side Wall (48G-1)

(a) Attach the fittings 48G-020, 48G-030 with the screws 48G-040, 48G-050 to the aft side wall assembly 48G-010.

(b) Assemble the post assembly 48G-270 as follows:

1 Attach the screws 48G-280.

(c) Attach the post assembly 48G-270 with the screws 48G-300, 48G-320, the washers 48G-250 and the caps 48G-310.

(d) Assemble the single door emergency unlocking device assembly 48G-380 as follows:

WARNING: BE CAREFUL WHEN YOU USE MATERIAL NO. 08-007 SEALANT, HIGH TEMPERATURE. OBEY THE MATERIAL MANUFACTURER'S INSTRUCTIONS.

1 Apply the Material No. 08-007 Sealant, High Temperature to the snap catch 48G-430 and to the pin 48G-420 and attach the emergency unlocking device pivot 48G-410, the snap catch 48G-430 and the pin 48G-420 to the emergency unlocking device housing 48G-390.

NOTE: Adjust the snap catch 48G-430 a half turn before stop.

WARNING: BE CAREFUL WHEN YOU USE MATERIAL NO. 08-007 SEALANT, HIGH TEMPERATURE. OBEY THE MATERIAL MANUFACTURER'S INSTRUCTIONS.

2 Apply the Material No. 08-007 Sealant, High Temperature to the bolt 48G-440 and attach the emergency unlocking device strike 48G-400 with the bolt 48G-440 to the emergency unlocking device housing 48G-390.

(e) Attach the single door emergency unlocking device assembly 48G-380 with the screws 48G-371 to the post assembly 48G-270.

(f) Attach the angle 48G-350 with the screws 48G-300 and the washers 48G-250 to the aft side wall assembly 48G-010.

(g) Attach the angles 48G-220 with the screws 48G-240 and the washers 48G-250 to the aft side wall assembly 48G-010.

(h) Attach the oxygen container assy 48G-230 with the screws 48G-240, 48G-242 and the washers 48G-250 to the angles 48G-220.

(i) Attach the ground cable in accordance with the Process and Material Specification PMS 01-04-58 to the oxygen container assy 48G-230.

(j) Attach the angle 48G-190 with the screws 48G-240 and the washers 48G-250 to the aft side wall assembly 48G-010.

(k) Attach the cover oxygen container assy 48G-180 with the screws 48G-200 and the nuts 48G-210 to the angle 48G-190.

(l) Attach the studs 48G-260 and the washers 48G-250 to the cover oxygen container assy 48G-180.

(m) Install and assemble the handle assemblies 48G-140 as follows:

1 Attach the special screws 48G-150 and the special washers 48G-170 to the aft side wall assembly 48G-010.

2 Attach the handle assemblies 48G-140 to the aft side wall assembly 48G-010.

3 Attach the security pins 48G-160 to the handle assemblies 48G-140.

SUB TASK 25-41-51-410-080-J01
D2549020809600 D2549030409400

9. Installation of the Side Wall (48G-1)

(a) Attach the fittings 48G-020, 48G-030 with the screws 48G-040, 48G-050 to the aft side wall assembly 48G-010.

(b) Assemble the post assembly 48G-270 as follows:

1 Attach the screws 48G-280.

(c) Attach the post assembly 48G-270 with the screws 48G-300, 48G-320, the washers 48G-250 and the caps 48G-310.

(d) Assemble the single door emergency unlocking device assembly 48G-380 as follows:

WARNING: **BE CAREFUL WHEN YOU USE MATERIAL NO. 08-007 SEALANT, HIGH TEMPERATURE. OBEY THE MATERIAL MANUFACTURER'S INSTRUCTIONS.**

1 Apply the Material No. 08-007 Sealant, High Temperature to the snap catch 48G-430 and to the pin 48G-420 and attach the emergency unlocking device pivot 48G-410, the snap catch 48G-430 and the pin 48G-420 to the emergency unlocking device housing 48G-390.

NOTE: **Adjust the snap catch 48G-430 a half turn before stop.**

WARNING: **BE CAREFUL WHEN YOU USE MATERIAL NO. 08-007 SEALANT, HIGH TEMPERATURE. OBEY THE MATERIAL MANUFACTURER'S INSTRUCTIONS.**

2 Apply the Material No. 08-007 Sealant, High Temperature to the bolt 48G-440 and attach the emergency unlocking device strike 48G-400 with the bolt 48G-440 to the emergency unlocking device housing 48G-390.

(e) Attach the single door emergency unlocking device assembly 48G-380 with the screws 48G-371 to the post assembly 48G-270.

(f) Attach the angle 48G-350 with the screws 48G-300 and the washers 48G-250 to the aft side wall assembly 48G-010.

(g) Attach the angles 48G-220 with the screws 48G-240 and the washers 48G-250 to the aft side wall assembly 48G-010.

(h) Attach the oxygen container assy 48G-230 with the screws 48G-240 and the washers 48G-250 to the angles 48G-220.

(i) Attach the ground cable in accordance with the Process and Material Specification PMS 01-04-58 to the oxygen container assy 48G-230.

(j) Attach the angle 48G-190 with the screws 48G-240 and the washers 48G-250 to the aft side wall assembly 48G-010.

(k) Attach the cover oxygen container assy 48G-180 with the screws 48G-200 and the nuts 48G-210 to the angle 48G-190.

(l) Attach the studs 48G-260 and the washers 48G-250 to the cover oxygen container assy 48G-180.

(m) Install and assemble the handle assemblies 48G-140 as follows:

1 Attach the special screws 48G-150 and the special washers 48G-170 to the aft side wall assembly 48G-010.

2 Attach the handle assemblies 48G-140 to the aft side wall assembly 48G-010.

3 Attach the security pins 48G-160 to the handle assemblies 48G-140.

TASK 25-41-51-400-825-K01

D2549010404000 D2549010404200 D2549010406000 D2549020302000 D2549020401400 D2549020401600 D2549020402000 D2549020402400 D2549020406600 D2549020406800 D2549020407200 D2549020408600 D2549020408800 D2549020411000 D2549020411400 D2549020412600 D2549030410600 D2549030411200 D2549030412000 D2549030412200 D2549030412600 D2549030413200 D2549030700400 D2549030701000 D2549030703400 D2549030704200 R225401611-000 R225401611-014 R225401611-016 R225401611-018 R225401624-000 R225401627-000 R225401627-002 R225401646-002 R225401688-000

246. Installation of the Side Wall

A. General

This task gives you the installation and assembly procedures of the component.

B. Job Set-up Information

(1) Consumable Materials

REFERENCE	DESIGNATION
08-007	Sealant, High Temperature

Table 7039
Consumable Materials

C. Procedure

WARNING: BE CAREFUL WHEN YOU USE SOLVENTS/CLEANING AGENTS, SEALANTS AND OTHER MATERIALS. OBEY THE MATERIAL MANUFACTURER'S INSTRUCTIONS AND THE LOCAL REGULATIONS. MAKE SURE THAT THERE IS A GOOD FLOW OF AIR THROUGH THE WORK AREA. DO NOT BREATHE THE FUMES. DO NOT SMOKE. DO NOT USE THESE MATERIALS NEAR A FLAME, SPARKS OR SOURCES OF HEAT. USE PROTECTIVE CLOTHING, GOGGLES AND GLOVES. IF YOU GET ONE OF THESE MATERIALS ON YOUR SKIN OR IN YOUR EYES, FLUSH IT AWAY WITH A FLOW OF CLEAN WATER. IF YOU GET ONE OF THESE MATERIALS IN YOUR MOUTH, GET IMMEDIATE MEDICAL AID. IN GENERAL, THESE MATERIALS ARE POISONOUS, FLAMMABLE AND SKIN IRRITANTS.

WARNING: KEEP ALL HYDROCARBONS (FUELS, LUBRICANTS, ETC.) AWAY FROM ALL SOURCES OF OXYGEN. OXYGEN BECOMES EXPLOSIVE WHEN IT TOUCHES HYDROCARBONS.

WARNING: TO PREVENT CONTAMINATION OF THE OXYGEN SYSTEM, MAKE SURE THAT YOUR HANDS AND ALL THE TOOLS ARE CLEAN.

CAUTION: **DO ALL THE WORK ON A CLEAN, SOFT SURFACE TO PREVENT DAMAGE TO THE COMPONENTS.**

CAUTION: **MAKE SURE THAT ALL THE PARTS ARE CLEAN BEFORE YOU ASSEMBLE THEM.**

SUB TASK 25-41-51-410-081-A01
D2549030410600

1. Installation of the Side Wall (48H-1)

   (a) Attach the fittings 48H-020, 48H-030 with the screws 48H-040, 48H-050 to the aft side wall assembly 48H-010.

   (b) Assemble the post assembly 48H-270 as follows:

      1 Attach the screws 48H-280.

   (c) Attach the post assembly 48H-270 with the screws 48H-300, 48H-320, the washers 48H-250 and the caps 48H-310.

   (d) Assemble the single door emergency unlocking device assembly 48H-370 as follows:

      WARNING: **BE CAREFUL WHEN YOU USE MATERIAL NO. 08-007 SEALANT, HIGH TEMPERATURE. OBEY THE MATERIAL MANUFACTURER'S INSTRUCTIONS.**

      1 Apply the Material No. 08-007 Sealant, High Temperature to the snap catch 48H-420 and to the pin 48H-410 and attach the emergency unlocking device pivot 48H-400, the snap catch 48H-420 and the pin 48H-410 to the emergency unlocking device housing 48H-380.

      NOTE: **Adjust the snap catch 48H-420 a half turn before stop.**

      WARNING: **BE CAREFUL WHEN YOU USE MATERIAL NO. 08-007 SEALANT, HIGH TEMPERATURE. OBEY THE MATERIAL MANUFACTURER'S INSTRUCTIONS.**

      2 Apply the Material No. 08-007 Sealant, High Temperature to the bolt 48H-430 and attach the emergency unlocking device strike 48H-390 with the bolt 48H-430 to the emergency unlocking device housing 48H-380.

   (e) Attach the single door emergency unlocking device assembly 48H-370 with the screws 48H-360 to the post assembly 48H-270.

(f) Attach the angle 48H-350 with the screws 48H-300 and the washers 48H-250 to the aft side wall assembly 48H-010.

(g) Attach the angles 48H-220 with the screws 48H-240 and the washers 48H-250 to the aft side wall assembly 48H-010.

(h) Attach the oxygen container assy 48H-230 with the screws 48H-240 and the washers 48H-250 to the angles 48H-220.

(i) Attach the ground cable in accordance with the Process and Material Specification PMS 01-04-58 to the oxygen container assy 48H-230.

(j) Attach the angle 48H-190 with the screws 48H-240 and the washers 48H-250 to the aft side wall assembly 48H-010.

(k) Attach the cover oxygen container assy 48H-180 with the screws 48H-200 and the nuts 48H-210 to the angle 48H-190.

(l) Attach the studs 48H-260 and the washers 48H-250 to the cover oxygen container assy 48H-180.

(m) Attach the coat hook 48H-440 with the screw 48H-450.

(n) Attach the screws 48H-340 to the aft side wall assembly 48H-010.

(o) Attach the toilet seat cover dispenser 48H-330 to the screws 48H-340.

(p) Install and assemble the handle assemblies 48H-140 as follows:

1 Attach the special screws 48H-150 and the special washers 48H-170 to the aft side wall assembly 48H-010.

2 Attach the handle assemblies 48H-140 to the aft side wall assembly 48H-010.

3 Attach the security pins 48H-160 to the handle assemblies 48H-140.

SUB TASK 25-41-51-410-081-B01
D2549030412200 D2549030704200

2. Installation of the Side Wall (48H-1)

(a) Attach the fittings 48H-020, 48H-030 with the screws 48H-040, 48H-050 to the aft side wall assembly 48H-010.

(b) Assemble the post assembly 48H-270 as follows:

1 Attach the screws 48H-280.

(c) Attach the post assembly 48H-270 with the screws 48H-300, 48H-320, the washers 48H-250 and the caps 48H-310.

(d) Assemble the single door emergency unlocking device assembly 48H-370 as follows:

WARNING: BE CAREFUL WHEN YOU USE MATERIAL NO. 08-007 SEALANT, HIGH TEMPERATURE. OBEY THE MATERIAL MANUFACTURER'S INSTRUCTIONS.

1 Apply the Material No. 08-007 Sealant, High Temperature to the snap catch 48H-420 and to the pin 48H-410 and attach the emergency unlocking device pivot 48H-400, the snap catch 48H-420 and the pin 48H-410 to the emergency unlocking device housing 48H-380.

NOTE: Adjust the snap catch 48H-420 a half turn before stop.

WARNING: BE CAREFUL WHEN YOU USE MATERIAL NO. 08-007 SEALANT, HIGH TEMPERATURE. OBEY THE MATERIAL MANUFACTURER'S INSTRUCTIONS.

2 Apply the Material No. 08-007 Sealant, High Temperature to the bolt 48H-430 and attach the emergency unlocking device strike 48H-390 with the bolt 48H-430 to the emergency unlocking device housing 48H-380.

(e) Attach the single door emergency unlocking device assembly 48H-370 with the screws 48H-360 to the post assembly 48H-270.

(f) Attach the angle 48H-350 with the screws 48H-300 and the washers 48H-250 to the aft side wall assembly 48H-010.

(g) Attach the angles 48H-220 with the screws 48H-240 and the washers 48H-250 to the aft side wall assembly 48H-010.

(h) Attach the oxygen container assy 48H-230 with the screws 48H-240 and the washers 48H-250 to the angles 48H-220.

(i) Attach the ground cable in accordance with the Process and Material Specification PMS 01-04-58 to the oxygen container assy 48H-230.

(j) Attach the angle 48H-190 with the screws 48H-240 and the washers 48H-250 to the aft side wall assembly 48H-010.

(k) Attach the cover oxygen container assy 48H-180 with the screws 48H-200 and the nuts 48H-210 to the angle 48H-190.

(l) Attach the studs 48H-260 and the washers 48H-250 to the cover oxygen container assy 48H-180.

(m) Attach the coat hook 48H-440 with the screw 48H-450.

(n) Attach the screws 48H-340 to the aft side wall assembly 48H-010.

(o) Attach the toilet seat cover dispenser 48H-330 to the screws 48H-340.

(p) Install and assemble the handle assemblies 48H-140 as follows:

1 Attach the special screws 48H-150 and the special washers 48H-170 to the aft side wall assembly 48H-010.

2 Attach the handle assemblies 48H-140 to the aft side wall assembly 48H-010.

3 Attach the security pins 48H-160 to the handle assemblies 48H-140.

SUB TASK 25-41-51-410-081-C01
D2549020402400

3. Installation of the Side Wall (48H-1)

(a) Attach the fittings 48H-020, 48H-030 with the screws 48H-040, 48H-050 to the aft side wall assembly 48H-010.

(b) Assemble the post assembly 48H-270 as follows:

1 Attach the screws 48H-280.

(c) Attach the post assembly 48H-270 with the screws 48H-300, 48H-320, the washers 48H-250 and the caps 48H-310.

(d) Assemble the single door emergency unlocking device assembly 48H-370 as follows:

WARNING: **BE CAREFUL WHEN YOU USE MATERIAL NO. 08-007 SEALANT, HIGH TEMPERATURE. OBEY THE MATERIAL MANUFACTURER'S INSTRUCTIONS.**

1 Apply the Material No. 08-007 Sealant, High Temperature to the snap catch 48H-420 and to the pin 48H-410 and attach the emergency unlocking device pivot 48H-400, the snap catch 48H-420 and the pin 48H-410 to the emergency unlocking device housing 48H-380.

NOTE: **Adjust the snap catch 48H-420 a half turn before stop.**

WARNING: **BE CAREFUL WHEN YOU USE MATERIAL NO. 08-007 SEALANT, HIGH TEMPERATURE. OBEY THE MATERIAL MANUFACTURER'S INSTRUCTIONS.**

2 Apply the Material No. 08-007 Sealant, High Temperature to the bolt 48H-430 and attach the emergency unlocking device strike 48H-390 with the bolt 48H-430 to the emergency unlocking device housing 48H-380.

(e) Attach the single door emergency unlocking device assembly 48H-370 with the screws 48H-360 to the post assembly 48H-270.

(f) Attach the angle 48H-350 with the screws 48H-300 and the washers 48H-250 to the aft side wall assembly 48H-010.

(g) Attach the angles 48H-220 with the screws 48H-240 and the washers 48H-250 to the aft side wall assembly 48H-010.

(h) Attach the oxygen container assy 48H-230 with the screws 48H-240 and the washers 48H-250 to the angles 48H-220.

(i) Attach the ground cable in accordance with the Process and Material Specification PMS 01-04-58 to the oxygen container assy 48H-230.

(j) Attach the angle 48H-190 with the screws 48H-240 and the washers 48H-250 to the aft side wall assembly 48H-010.

(k) Attach the cover oxygen container assy 48H-180 with the screws 48H-200 and the nuts 48H-210 to the angle 48H-190.

(l) Attach the studs 48H-260 and the washers 48H-250 to the cover oxygen container assy 48H-180.

(m) Attach the coat hook 48H-440 with the screw 48H-450.

(n) Install and assemble the handle assemblies 48H-140 as follows:

1 Attach the special screws 48H-150 and the special washers 48H-170 to the aft side wall assembly 48H-010.

2 Attach the handle assemblies 48H-140 to the aft side wall assembly 48H-010.

3 Attach the security pins 48H-160 to the handle assemblies 48H-140.

SUB TASK 25-41-51-410-081-D01
D2549020302000 D2549020401400 D2549020402000 D2549020406600 D2549020408800 D2549020411000 D2549030411200 D2549030701000 D2549030703400 R225401627-000 R225401627-002

4. Installation of the Side Wall (48H-1)

(a) Attach the fittings 48H-020, 48H-030 with the screws 48H-040, 48H-050 to the aft side wall assembly 48H-010.

(b) Assemble the post assembly 48H-270 as follows:

1 Attach the screws 48H-280.

(c) Attach the post assembly 48H-270 with the screws 48H-300, 48H-320, the washers 48H-250 and the caps 48H-310.

(d) Assemble the single door emergency unlocking device assembly 48H-370 as follows:

WARNING: BE CAREFUL WHEN YOU USE MATERIAL NO. 08-007 SEALANT, HIGH TEMPERATURE. OBEY THE MATERIAL MANUFACTURER'S INSTRUCTIONS.

1 Apply the Material No. 08-007 Sealant, High Temperature to the snap catch 48H-420 and to the pin 48H-410 and attach the emergency unlocking device pivot 48H-400, the snap catch 48H-420 and the pin 48H-410 to the emergency unlocking device housing 48H-380.

NOTE: Adjust the snap catch 48H-420 a half turn before stop.

WARNING: BE CAREFUL WHEN YOU USE MATERIAL NO. 08-007 SEALANT, HIGH TEMPERATURE. OBEY THE MATERIAL MANUFACTURER'S INSTRUCTIONS.

2 Apply the Material No. 08-007 Sealant, High Temperature to the bolt 48H-430 and attach the emergency unlocking device strike 48H-390 with the bolt 48H-430 to the emergency unlocking device housing 48H-380.

(e) Attach the single door emergency unlocking device assembly 48H-370 with the screws 48H-360 to the post assembly 48H-270.

(f) Attach the angle 48H-350 with the screws 48H-300 and the washers 48H-250 to the aft side wall assembly 48H-010.

(g) Attach the angles 48H-220 with the screws 48H-240 and the washers 48H-250 to the aft side wall assembly 48H-010.

(h) Attach the oxygen container assy 48H-230 with the screws 48H-240, 48H-242 and the washers 48H-250 to the angles 48H-220.

(i) Attach the ground cable in accordance with the Process and Material Specification PMS 01-04-58 to the oxygen container assy 48H-230.

(j) Attach the angle 48H-190 with the screws 48H-240 and the washers 48H-250 to the aft side wall assembly 48H-010.

(k) Attach the cover oxygen container assy 48H-180 with the screws 48H-200 and the nuts 48H-210 to the angle 48H-190.

(l) Attach the studs 48H-260 and the washers 48H-250 to the cover oxygen container assy 48H-180.

(m) Attach the screws 48H-340 to the aft side wall assembly 48H-010.

(n) Attach the toilet seat cover dispenser 48H-330 to the screws 48H-340.

(o) Install and assemble the handle assemblies 48H-140 as follows:

1 Attach the special screws 48H-150 and the special washers 48H-170 to the aft side wall assembly 48H-010.

2 Attach the handle assemblies 48H-140 to the aft side wall assembly 48H-010.

3 Attach the security pins 48H-160 to the handle assemblies 48H-140.

SUB TASK 25-41-51-410-081-E01

D2549010404000 D2549020406800 D2549020407200 D2549030412000 R225401646-002

5. Installation of the Side Wall (48H-1)

(a) Attach the fittings 48H-020, 48H-030 with the screws 48H-040, 48H-050 to the aft side wall assembly 48H-010.

(b) Assemble the post assembly 48H-270 as follows:

1 Attach the screws 48H-280.

(c) Attach the post assembly 48H-270 with the screws 48H-300, 48H-320, the washers 48H-250 and the caps 48H-310.

(d) Assemble the single door emergency unlocking device assembly 48H-370 as follows:

WARNING: BE CAREFUL WHEN YOU USE MATERIAL NO. 08-007 SEALANT, HIGH TEMPERATURE. OBEY THE MATERIAL MANUFACTURER'S INSTRUCTIONS.

1 Apply the Material No. 08-007 Sealant, High Temperature to the snap catch 48H-420 and to the pin 48H-410 and attach the emergency unlocking device pivot 48H-400, the snap catch 48H-420 and the pin 48H-410 to the emergency unlocking device housing 48H-380.

NOTE: Adjust the snap catch 48H-420 a half turn before stop.

WARNING: BE CAREFUL WHEN YOU USE MATERIAL NO. 08-007 SEALANT, HIGH TEMPERATURE. OBEY THE MATERIAL MANUFACTURER'S INSTRUCTIONS.

2 Apply the Material No. 08-007 Sealant, High Temperature to the bolt 48H-430 and attach the emergency unlocking device strike 48H-390 with the bolt 48H-430 to the emergency unlocking device housing 48H-380.

(e) Attach the single door emergency unlocking device assembly 48H-370 with the screws 48H-360 to the post assembly 48H-270.

(f) Attach the angle 48H-350 with the screws 48H-300 and the washers 48H-250 to the aft side wall assembly 48H-010.

(g) Attach the angles 48H-220 with the screws 48H-240 and the washers 48H-250 to the aft side wall assembly 48H-010.

(h) Attach the oxygen container assy 48H-230 with the screws 48H-240, 48H-242 and the washers 48H-250 to the angles 48H-220.

(i) Attach the ground cable in accordance with the Process and Material Specification PMS 01-04-58 to the oxygen container assy 48H-230.

(j) Attach the angle 48H-190 with the screws 48H-240 and the washers 48H-250 to the aft side wall assembly 48H-010.

(k) Attach the cover oxygen container assy 48H-180 with the screws 48H-200 and the nuts 48H-210 to the angle 48H-190.

(l) Attach the studs 48H-260 and the washers 48H-250 to the cover oxygen container assy 48H-180.

(m) Attach the screws 48H-340 to the aft side wall assembly 48H-010.

(n) Attach the toilet seat cover dispenser 48H-330 to the screws 48H-340.

(o) Install and assemble the handle assemblies 48H-140 as follows:

1 Attach the special screws 48H-150 and the special washers 48H-170 to the aft side wall assembly 48H-010.

2 Attach the handle assemblies 48H-140 to the aft side wall assembly 48H-010.

3 Attach the security pins 48H-160 to the handle assemblies 48H-140.

SUB TASK 25-41-51-410-081-F01
D2549010404200 D2549010406000 D2549020408600 D2549020411400 D2549020412600 D2549030412600 D2549030413200 D2549030700400 R225401611-000 R225401611-014 R225401611-016 R225401611-018 R225401688-000

6. Installation of the Side Wall (48H-1)

(a) Attach the fittings 48H-020, 48H-030 with the screws 48H-040, 48H-050 to the aft side wall assembly 48H-010.

(b) Assemble the post assembly 48H-270 as follows:

1 Attach the screws 48H-280.

(c) Attach the post assembly 48H-270 with the screws 48H-300, 48H-320, the washers 48H-250 and the caps 48H-310.

(d) Assemble the single door emergency unlocking device assembly 48H-370 as follows:

WARNING: **BE CAREFUL WHEN YOU USE MATERIAL NO. 08-007 SEALANT, HIGH TEMPERATURE. OBEY THE MATERIAL MANUFACTURER'S INSTRUCTIONS.**

1 Apply the Material No. 08-007 Sealant, High Temperature to the snap catch 48H-420 and to the pin 48H-410 and attach the emergency unlocking device pivot 48H-400, the snap catch 48H-420 and the pin 48H-410 to the emergency unlocking device housing 48H-380.

NOTE: **Adjust the snap catch 48H-420 a half turn before stop.**

WARNING: **BE CAREFUL WHEN YOU USE MATERIAL NO. 08-007 SEALANT, HIGH TEMPERATURE. OBEY THE MATERIAL MANUFACTURER'S INSTRUCTIONS.**

2 Apply the Material No. 08-007 Sealant, High Temperature to the bolt 48H-430 and attach the emergency unlocking device strike 48H-390 with the bolt 48H-430 to the emergency unlocking device housing 48H-380.

(e) Attach the single door emergency unlocking device assembly 48H-370 with the screws 48H-360 to the post assembly 48H-270.

(f) Attach the angle 48H-350 with the screws 48H-300 and the washers 48H-250 to the aft side wall assembly 48H-010.

(g) Attach the angles 48H-220 with the screws 48H-240 and the washers 48H-250 to the aft side wall assembly 48H-010.

(h) Attach the oxygen container assy 48H-230 with the screws 48H-240 and the washers 48H-250 to the angles 48H-220.

(i) Attach the ground cable in accordance with the Process and Material Specification PMS 01-04-58 to the oxygen container assy 48H-230.

(j) Attach the angle 48H-190 with the screws 48H-240 and the washers 48H-250 to the aft side wall assembly 48H-010.

(k) Attach the cover oxygen container assy 48H-180 with the screws 48H-200 and the nuts 48H-210 to the angle 48H-190.

(l) Attach the studs 48H-260 and the washers 48H-250 to the cover oxygen container assy 48H-180.

(m) Install and assemble the handle assemblies 48H-140 as follows:

1 Attach the special screws 48H-150 and the special washers 48H-170 to the aft side wall assembly 48H-010.

2 Attach the handle assemblies 48H-140 to the aft side wall assembly 48H-010.

3 Attach the security pins 48H-160 to the handle assemblies 48H-140.

SUB TASK 25-41-51-410-081-G01
D2549020401600 R225401624-000

7. Installation of the Side Wall (48H-1)

(a) Attach the fittings 48H-020, 48H-030 with the screws 48H-040, 48H-050 to the aft side wall assembly 48H-010.

(b) Assemble the post assembly 48H-270 as follows:

1 Attach the screws 48H-280.

(c) Attach the post assembly 48H-270 with the screws 48H-300, 48H-320, the washers 48H-250 and the caps 48H-310.

(d) Attach the angle 48H-350 with the screws 48H-300 and the washers 48H-250 to the aft side wall assembly 48H-010.

(e) Attach the angles 48H-220 with the screws 48H-240 and the washers 48H-250 to the aft side wall assembly 48H-010.

(f) Attach the oxygen container assy 48H-230 with the screws 48H-240, 48H-242 and the washers 48H-250 to the angles 48H-220.

(g) Attach the ground cable in accordance with the Process and Material Specification PMS 01-04-58 to the oxygen container assy 48H-230.

(h) Attach the angle 48H-190 with the screws 48H-240 and the washers 48H-250 to the aft side wall assembly 48H-010.

(i) Attach the cover oxygen container assy 48H-180 with the screws 48H-200 and the nuts 48H-210 to the angle 48H-190.

(j) Attach the studs 48H-260 and the washers 48H-250 to the cover oxygen container assy 48H-180.

(k) Install and assemble the handle assemblies 48H-140 as follows:

1 Attach the special screws 48H-150 and the special washers 48H-170 to the aft side wall assembly 48H-010.

2 Attach the handle assemblies 48H-140 to the aft side wall assembly 48H-010.

3 Attach the security pins 48H-160 to the handle assemblies 48H-140.

TASK 25-41-51-400-825-L01
D2549010401400 D2549020410200 D2549020500200 D2549020501600 D2549020601600 D2549030411600 D2549030411800 D2549030414800 D2549030700000 D2549030700600 D2549030702800 D2549030703000 D2549030703600 D2549030703800 D2549040501800 D2549040502000 R225401133-000 R225401697-000 R225401697-002 R225401803-000 R225401803-002

247. Installation of the Side Wall

A. General

This task gives you the installation and assembly procedures of the component.

B. Job Set-up Information
(1) Consumable Materials

REFERENCE	DESIGNATION
08-007	Sealant, High Temperature

Table 7040
Consumable Materials

C. Procedure

WARNING: **BE CAREFUL WHEN YOU USE SOLVENTS/CLEANING AGENTS, SEALANTS AND OTHER MATERIALS. OBEY THE MATERIAL MANUFACTURER'S INSTRUCTIONS AND THE LOCAL REGULATIONS. MAKE SURE THAT THERE IS A GOOD FLOW OF AIR THROUGH THE WORK AREA. DO NOT BREATHE THE FUMES. DO NOT SMOKE. DO NOT USE THESE MATERIALS NEAR A FLAME, SPARKS OR SOURCES OF HEAT. USE PROTECTIVE CLOTHING, GOGGLES AND GLOVES. IF YOU GET ONE OF THESE MATERIALS ON YOUR SKIN OR IN YOUR EYES, FLUSH IT AWAY WITH A FLOW OF CLEAN WATER. IF YOU GET ONE OF THESE MATERIALS IN YOUR MOUTH, GET IMMEDIATE MEDICAL AID. IN GENERAL, THESE MATERIALS ARE POISONOUS, FLAMMABLE AND SKIN IRRITANTS.**

WARNING: **KEEP ALL HYDROCARBONS (FUELS, LUBRICANTS, ETC.) AWAY FROM ALL SOURCES OF OXYGEN. OXYGEN BECOMES EXPLOSIVE WHEN IT TOUCHES HYDROCARBONS.**

WARNING: **TO PREVENT CONTAMINATION OF THE OXYGEN SYSTEM, MAKE SURE THAT YOUR HANDS AND ALL THE TOOLS ARE CLEAN.**

CAUTION: **DO ALL THE WORK ON A CLEAN, SOFT SURFACE TO PREVENT DAMAGE TO THE COMPONENTS.**

CAUTION: **MAKE SURE THAT ALL THE PARTS ARE CLEAN BEFORE YOU ASSEMBLE THEM.**

SUB TASK 25-41-51-410-082-A01
D2549020501600

1. Installation of the Side Wall (48J-1)

   (a) Attach the fittings 48J-020, 48J-030 with the screws 48J-040, 48J-050 to the aft side wall assembly 48J-010.

   (b) Assemble the post assembly 48J-230 as follows:

      1 Attach the screws 48J-240.

   (c) Attach the post assembly 48J-230 with the screws 48J-260, 48J-280, the washers 48J-210 and the caps 48J-270.

   (d) Assemble the single door emergency unlocking device assembly 48J-370 as follows:

      WARNING: **BE CAREFUL WHEN YOU USE MATERIAL NO. 08-007 SEALANT, HIGH TEMPERATURE. OBEY THE MATERIAL MANUFACTURER'S INSTRUCTIONS.**

      1 Apply the Material No. 08-007 Sealant, High Temperature to the snap catch 48J-420 and to the pin 48J-410 and attach the emergency unlocking device pivot 48J-400, the snap catch 48J-420 and the pin 48J-410 to the emergency unlocking device housing 48J-380.

      NOTE: **Adjust the snap catch 48J-420 a half turn before stop.**

      WARNING: **BE CAREFUL WHEN YOU USE MATERIAL NO. 08-007 SEALANT, HIGH TEMPERATURE. OBEY THE MATERIAL MANUFACTURER'S INSTRUCTIONS.**

      2 Apply the Material No. 08-007 Sealant, High Temperature to the bolt 48J-430 and attach the emergency unlocking device strike 48J-390 with the bolt 48J-430 to the emergency unlocking device housing 48J-380.

   (e) Attach the single door emergency unlocking device assembly 48J-370 and the plates 48J-460 with the screws 48J-441 and the nuts 48J-450 to the post assembly 48J-230.

   (f) Attach the angle 48J-340 with the screws 48J-260 and the washers 48J-210 to the aft side wall assembly 48J-010.

(g) Attach the angles 48J-180 with the screws 48J-200 and the washers 48J-210 to the aft side wall assembly 48J-010.

(h) Attach the oxygen container assy 48J-190 with the screws 48J-200 and the washers 48J-210 to the angles 48J-180.

(i) Attach the ground cable in accordance with the Process and Material Specification PMS 01-04-58 to the oxygen container assy 48J-190.

(j) Attach the angle 48J-150 with the screws 48J-200 and the washers 48J-210 to the aft side wall assembly 48J-010.

(k) Attach the cover oxygen container assy 48J-140 with the screws 48J-160 and the nuts 48J-170 to the angle 48J-150.

(l) Attach the studs 48J-220 and the washers 48J-210 to the cover oxygen container assy 48J-140.

(m) Attach the support 48J-330 with the screws 48J-260 and the washers 48J-210 to the aft side wall assembly 48J-010.

(n) Install and assemble the handle assembly 48J-290 as follows:

1 Attach the special screws 48J-300 and the special washers 48J-320 to the aft side wall assembly 48J-010.

2 Attach the handle assembly 48J-290 to the aft side wall assembly 48J-010.

3 Attach the security pins 48J-310 to the handle assembly 48J-290.

SUB TASK 25-41-51-410-082-B01
D2549010401400 D2549040501800 D2549040502000 R225401803-000 R225401803-002

2. Installation of the Side Wall (48J-1)

(a) Attach the fittings 48J-020, 48J-030 with the screws 48J-040, 48J-050 to the aft side wall assembly 48J-010.

(b) Assemble the post assembly 48J-230 as follows:

1 Attach the screws 48J-240.

(c) Attach the post assembly 48J-230 with the screws 48J-260, 48J-280, the washers 48J-210 and the caps 48J-270.

(d) Assemble the single door emergency unlocking device assembly 48J-370 as follows:

WARNING: BE CAREFUL WHEN YOU USE MATERIAL NO. 08-007 SEALANT, HIGH TEMPERATURE. OBEY THE MATERIAL MANUFACTURER'S INSTRUCTIONS.

1 Apply the Material No. 08-007 Sealant, High Temperature to the snap catch 48J-420 and to the pin 48J-410 and attach the emergency unlocking device pivot 48J-400, the snap catch 48J-420 and the pin 48J-410 to the emergency unlocking device housing 48J-380.

NOTE: Adjust the snap catch 48J-420 a half turn before stop.

WARNING: BE CAREFUL WHEN YOU USE MATERIAL NO. 08-007 SEALANT, HIGH TEMPERATURE. OBEY THE MATERIAL MANUFACTURER'S INSTRUCTIONS.

2 Apply the Material No. 08-007 Sealant, High Temperature to the bolt 48J-430 and attach the emergency unlocking device strike 48J-390 with the bolt 48J-430 to the emergency unlocking device housing 48J-380.

(e) Attach the single door emergency unlocking device assembly 48J-370 with the screws 48J-440 to the post assembly 48J-230.

(f) Attach the angle 48J-340 with the screws 48J-260 and the washers 48J-210 to the aft side wall assembly 48J-010.

(g) Attach the angles 48J-180 with the screws 48J-200 and the washers 48J-210 to the aft side wall assembly 48J-010.

(h) Attach the oxygen container assy 48J-190 with the screws 48J-200, 48J-205 and the washers 48J-210 to the angles 48J-180.

(i) Attach the ground cable in accordance with the Process and Material Specification PMS 01-04-58 to the oxygen container assy 48J-190.

(j) Attach the angle 48J-150 with the screws 48J-200 and the washers 48J-210 to the aft side wall assembly 48J-010.

(k) Attach the cover oxygen container assy 48J-140 with the screws 48J-160 and the nuts 48J-170 to the angle 48J-150.

(l) Attach the studs 48J-220 and the washers 48J-210 to the cover oxygen container assy 48J-140.

(m) Attach the screws 48J-360 to the aft side wall assembly 48J-010.

(n) Attach the toilet seat cover dispenser 48J-350 to the screws 48J-360.

(o) Attach the support 48J-330 with the screws 48J-260 and the washers 48J-210 to the aft side wall assembly 48J-010.

(p) Install and assemble the handle assembly 48J-290 as follows:

1 Attach the special screws 48J-300 and the special washers 48J-320 to the aft side wall assembly 48J-010.

2 Attach the handle assembly 48J-290 to the aft side wall assembly 48J-010.

3 Attach the security pins 48J-310 to the handle assembly 48J-290.

SUB TASK 25-41-51-410-082-C01
D2549020410200 D2549030700600 D2549030703000

3. Installation of the Side Wall (48J-1)

(a) If removed, attach the kick strip 48J-520 to the aft side wall assembly 48J-010.

(b) Attach the fittings 48J-020, 48J-030 with the screws 48J-040, 48J-050 to the aft side wall assembly 48J-010.

(c) Assemble the post assembly 48J-230 as follows:

1 Attach the screws 48J-240.

(d) Attach the post assembly 48J-230 with the screws 48J-260, 48J-280, the washers 48J-210 and the caps 48J-270.

(e) Assemble the single door emergency unlocking device assembly 48J-370 as follows:

WARNING: **BE CAREFUL WHEN YOU USE MATERIAL NO. 08-007 SEALANT, HIGH TEMPERATURE. OBEY THE MATERIAL MANUFACTURER'S INSTRUCTIONS.**

1 Apply the Material No. 08-007 Sealant, High Temperature to the snap catch 48J-420 and to the pin 48J-410 and attach the emergency unlocking device pivot 48J-400, the snap catch 48J-420 and the pin 48J-410 to the emergency unlocking device housing 48J-380.

NOTE: **Adjust the snap catch 48J-420 a half turn before stop.**

WARNING: **BE CAREFUL WHEN YOU USE MATERIAL NO. 08-007 SEALANT, HIGH TEMPERATURE. OBEY THE MATERIAL MANUFACTURER'S INSTRUCTIONS.**

2 Apply the Material No. 08-007 Sealant, High Temperature to the bolt 48J-430 and attach the emergency unlocking device strike 48J-390 with the bolt 48J-430 to the emergency unlocking device housing 48J-380.

(f) Attach the single door emergency unlocking device assembly 48J-370 with the screws 48J-440 to the post assembly 48J-230.

(g) Attach the angle 48J-340 with the screws 48J-260 and the washers 48J-210 to the aft side wall assembly 48J-010.

(h) Attach the angles 48J-180 with the screws 48J-200 and the washers 48J-210 to the aft side wall assembly 48J-010.

(i) Attach the oxygen container assy 48J-190 with the screws 48J-200 and the washers 48J-210 to the angles 48J-180.

(j) Attach the ground cable in accordance with the Process and Material Specification PMS 01-04-58 to the oxygen container assy 48J-190.

(k) Attach the angle 48J-150 with the screws 48J-200 and the washers 48J-210 to the aft side wall assembly 48J-010.

(l) Attach the cover oxygen container assy 48J-140 with the screws 48J-160 and the nuts 48J-170 to the angle 48J-150.

(m) Attach the studs 48J-220 and the washers 48J-210 to the cover oxygen container assy 48J-140.

(n) Attach the screws 48J-360 to the aft side wall assembly 48J-010.

(o) Attach the toilet seat cover dispenser 48J-350 to the screws 48J-360.

(p) Attach the support 48J-330 with the screws 48J-260 and the washers 48J-210 to the aft side wall assembly 48J-010.

(q) Install and assemble the handle assembly 48J-290 as follows:

1 Attach the special screws 48J-300 and the special washers 48J-320 to the aft side wall assembly 48J-010.

2 Attach the handle assembly 48J-290 to the aft side wall assembly 48J-010.

3 Attach the security pins 48J-310 to the handle assembly 48J-290.

SUB TASK 25-41-51-410-082-D01
D2549030411600 D2549030411800 D2549030700000 D2549030702800 D2549030703600 D2549030703800 R225401697-000 R225401697-002

4. Installation of the Side Wall (48J-1)

(a) Attach the fittings 48J-020, 48J-030 with the screws 48J-040, 48J-050 to the aft side wall assembly 48J-010.

(b) Assemble the post assembly 48J-230 as follows:

1 Attach the screws 48J-240.

(c) Attach the post assembly 48J-230 with the screws 48J-260, 48J-280, the washers 48J-210 and the caps 48J-270.

(d) Assemble the single door emergency unlocking device assembly 48J-370 as follows:

WARNING: BE CAREFUL WHEN YOU USE MATERIAL NO. 08-007 SEALANT, HIGH TEMPERATURE. OBEY THE MATERIAL MANUFACTURER'S INSTRUCTIONS.

1 Apply the Material No. 08-007 Sealant, High Temperature to the snap catch 48J-420 and to the pin 48J-410 and attach the emergency unlocking device pivot 48J-400, the snap catch 48J-420 and the pin 48J-410 to the emergency unlocking device housing 48J-380.

NOTE: Adjust the snap catch 48J-420 a half turn before stop.

WARNING: **BE CAREFUL WHEN YOU USE MATERIAL NO. 08-007 SEALANT, HIGH TEMPERATURE. OBEY THE MATERIAL MANUFACTURER'S INSTRUCTIONS.**

2 Apply the Material No. 08-007 Sealant, High Temperature to the bolt 48J-430 and attach the emergency unlocking device strike 48J-390 with the bolt 48J-430 to the emergency unlocking device housing 48J-380.

(e) Attach the single door emergency unlocking device assembly 48J-370 with the screws 48J-440 to the post assembly 48J-230.

(f) Attach the angle 48J-340 with the screws 48J-260 and the washers 48J-210 to the aft side wall assembly 48J-010.

(g) Attach the angles 48J-180 with the screws 48J-200 and the washers 48J-210 to the aft side wall assembly 48J-010.

(h) Attach the oxygen container assy 48J-190 with the screws 48J-200, 48J-205 and the washers 48J-210 to the angles 48J-180.

(i) Attach the ground cable in accordance with the Process and Material Specification PMS 01-04-58 to the oxygen container assy 48J-190.

(j) Attach the hose 48J-480, the clamps 48J-490 with the screws 48J-500 and the washers 48J-510 to the aft side wall assembly 48J-010.

(k) Attach the angle 48J-150 with the screws 48J-200 and the washers 48J-210 to the aft side wall assembly 48J-010.

(l) Attach the cover oxygen container assy 48J-140 with the screws 48J-160 and the nuts 48J-170 to the angle 48J-150.

(m) Attach the studs 48J-220 and the washers 48J-210 to the cover oxygen container assy 48J-140.

(n) Attach the support 48J-330 with the screws 48J-260 and the washers 48J-210 to the aft side wall assembly 48J-010.

(o) Install and assemble the handle assembly 48J-290 as follows:

1 Attach the special screws 48J-300 and the special washers 48J-320 to the aft side wall assembly 48J-010.

2 Attach the handle assembly 48J-290 to the aft side wall assembly 48J-010.

3 Attach the security pins 48J-310 to the handle assembly 48J-290.

SUB TASK 25-41-51-410-082-E01
D2549030414800

5. Installation of the Side Wall (48J-1)

(a) Attach the fittings 48J-020, 48J-030 with the screws 48J-040, 48J-050 to the aft side wall assembly 48J-010.

(b) Assemble the post assembly 48J-230 as follows:

1 Attach the screws 48J-240.

(c) Attach the post assembly 48J-230 with the screws 48J-260, 48J-280, the washers 48J-210 and the caps 48J-270.

(d) Assemble the single door emergency unlocking device assembly 48J-370 as follows:

WARNING: BE CAREFUL WHEN YOU USE MATERIAL NO. 08-007 SEALANT, HIGH TEMPERATURE. OBEY THE MATERIAL MANUFACTURER'S INSTRUCTIONS.

1 Apply the Material No. 08-007 Sealant, High Temperature to the snap catch 48J-420 and to the pin 48J-410 and attach the emergency unlocking device pivot 48J-400, the snap catch 48J-420 and the pin 48J-410 to the emergency unlocking device housing 48J-380.

NOTE: Adjust the snap catch 48J-420 a half turn before stop.

WARNING: BE CAREFUL WHEN YOU USE MATERIAL NO. 08-007 SEALANT, HIGH TEMPERATURE. OBEY THE MATERIAL MANUFACTURER'S INSTRUCTIONS.

2 Apply the Material No. 08-007 Sealant, High Temperature to the bolt 48J-430 and attach the emergency unlocking device strike 48J-390 with the bolt 48J-430 to the emergency unlocking device housing 48J-380.

(e) Attach the single door emergency unlocking device assembly 48J-370 with the screws 48J-440 to the post assembly 48J-230.

(f) Attach the angle 48J-340 with the screws 48J-260 and the washers 48J-210 to the aft side wall assembly 48J-010.

(g) Attach the angles 48J-180 with the screws 48J-200 and the washers 48J-210 to the aft side wall assembly 48J-010.

(h) Attach the oxygen container assy 48J-190 with the screws 48J-200 and the washers 48J-210 to the angles 48J-180.

(i) Attach the ground cable in accordance with the Process and Material Specification PMS 01-04-58 to the oxygen container assy 48J-190.

(j) Attach the angle 48J-150 with the screws 48J-200 and the washers 48J-210 to the aft side wall assembly 48J-010.

(k) Attach the cover oxygen container assy 48J-140 with the screws 48J-160 and the nuts 48J-170 to the angle 48J-150.

(l) Attach the studs 48J-220 and the washers 48J-210 to the cover oxygen container assy 48J-140.

(m) Attach the support 48J-330 with the screws 48J-260 and the washers 48J-210 to the aft side wall assembly 48J-010.

(n) Install and assemble the handle assembly 48J-290 as follows:

1 Attach the special screws 48J-300 and the special washers 48J-320 to the aft side wall assembly 48J-010.

2 Attach the handle assembly 48J-290 to the aft side wall assembly 48J-010.

3 Attach the security pins 48J-310 to the handle assembly 48J-290.

SUB TASK 25-41-51-410-082-F01
D2549020500200 D2549020601600 R225401133-000

6. Installation of the Side Wall (48J-1)

(a) Attach the fittings 48J-020, 48J-030 with the screws 48J-040, 48J-050 to the aft side wall assembly 48J-010.

(b) Assemble the post assembly 48J-230 as follows:

1 Attach the screws 48J-240.

(c) Attach the post assembly 48J-230 with the screws 48J-260, 48J-280, the washers 48J-210 and the caps 48J-270.

(d) Attach the angle 48J-340 with the screws 48J-260 and the washers 48J-210 to the aft side wall assembly 48J-010.

(e) Attach the angles 48J-180 with the screws 48J-200 and the washers 48J-210 to the aft side wall assembly 48J-010.

(f) Attach the oxygen container assy 48J-190 with the screws 48J-200 and the washers 48J-210 to the angles 48J-180.

(g) Attach the ground cable in accordance with the Process and Material Specification PMS 01-04-58 to the oxygen container assy 48J-190.

(h) Attach the angle 48J-150 with the screws 48J-200 and the washers 48J-210 to the aft side wall assembly 48J-010.

(i) Attach the cover oxygen container assy 48J-140 with the screws 48J-160 and the nuts 48J-170 to the angle 48J-150.

(j) Attach the studs 48J-220 and the washers 48J-210 to the cover oxygen container assy 48J-140.

(k) Install and assemble the handle assembly 48J-290 as follows:

1 Attach the special screws 48J-300 and the special washers 48J-320 to the aft side wall assembly 48J-010.

2 Attach the handle assembly 48J-290 to the aft side wall assembly 48J-010.

3 Attach the security pins 48J-310 to the handle assembly 48J-290.

TASK 25-41-51-400-825-M01

D2547160900200 D2547160900400 D2549010401600 D2549010403800 D2549010404400 D2549010406200 D2549010613600 D2549020300400 D2549020300600 D2549020300800 D2549020403600 D2549020408000 D2549020409200 D2549020409400 D2549020409600 D2549020409800 D2549020410600 D2549020804400 D2549030412800 D2549030413000 D2549030702400 D2549030705200 R225401602-000 R225401643-006 R225401643-008 R225401689-004 R225401689-006 R225401691-000 R225401691-002

248. Installation of the Side Wall

A. General

This task gives you the installation and assembly procedures of the component.

B. Job Set-up Information

(1) Consumable Materials

REFERENCE	DESIGNATION
08-007	Sealant, High Temperature

Table 7041
Consumable Materials

C. Procedure

WARNING: BE CAREFUL WHEN YOU USE SOLVENTS/CLEANING AGENTS, SEALANTS AND OTHER MATERIALS. OBEY THE MATERIAL MANUFACTURER'S INSTRUCTIONS AND THE LOCAL REGULATIONS. MAKE SURE THAT THERE IS A GOOD FLOW OF AIR THROUGH THE WORK AREA. DO NOT BREATHE THE FUMES. DO NOT SMOKE. DO NOT USE THESE MATERIALS NEAR A FLAME, SPARKS OR SOURCES OF HEAT. USE PROTECTIVE CLOTHING, GOGGLES AND GLOVES. IF YOU GET ONE OF THESE MATERIALS ON YOUR SKIN OR IN YOUR EYES, FLUSH IT AWAY WITH A FLOW OF CLEAN WATER. IF YOU GET ONE OF THESE MATERIALS IN YOUR MOUTH, GET IMMEDIATE MEDICAL AID. IN GENERAL, THESE MATERIALS ARE POISONOUS, FLAMMABLE AND SKIN IRRITANTS.

WARNING: KEEP ALL HYDROCARBONS (FUELS, LUBRICANTS, ETC.) AWAY FROM ALL SOURCES OF OXYGEN. OXYGEN BECOMES EXPLOSIVE WHEN IT TOUCHES HYDROCARBONS.

WARNING: TO PREVENT CONTAMINATION OF THE OXYGEN SYSTEM, MAKE SURE THAT YOUR HANDS AND ALL THE TOOLS ARE CLEAN.

CAUTION: **DO ALL THE WORK ON A CLEAN, SOFT SURFACE TO PREVENT DAMAGE TO THE COMPONENTS.**

CAUTION: **MAKE SURE THAT ALL THE PARTS ARE CLEAN BEFORE YOU ASSEMBLE THEM.**

SUB TASK 25-41-51-410-084-A01
D2549010403800

1. Installation of the Side Wall (48K-1)

   (a) Attach the fittings 48K-020, 48K-030 with the screws 48K-040, 48K-050 to the aft side wall assembly 48K-010.

   (b) Assemble the post assembly 48K-270 as follows:

      1 Attach the screws 48K-280.

   (c) Attach the post assembly 48K-270 with the screws 48K-300, 48K-320, the washers 48K-250 and the caps 48K-310.

   (d) Assemble the single door emergency unlocking device assembly 48K-370 as follows:

      WARNING: **BE CAREFUL WHEN YOU USE MATERIAL NO. 08-007 SEALANT, HIGH TEMPERATURE. OBEY THE MATERIAL MANUFACTURER'S INSTRUCTIONS.**

      1 Apply the Material No. 08-007 Sealant, High Temperature to the snap catch 48K-420 and to the pin 48K-410 and attach the emergency unlocking device pivot 48K-400, the snap catch 48K-420 and the pin 48K-410 to the emergency unlocking device housing 48K-380.

      NOTE: **Adjust the snap catch 48K-420 a half turn before stop.**

      WARNING: **BE CAREFUL WHEN YOU USE MATERIAL NO. 08-007 SEALANT, HIGH TEMPERATURE. OBEY THE MATERIAL MANUFACTURER'S INSTRUCTIONS.**

      2 Apply the Material No. 08-007 Sealant, High Temperature to the bolt 48K-430 and attach the emergency unlocking device strike 48K-390 with the bolt 48K-430 to the emergency unlocking device housing 48K-380.

   (e) Attach the single door emergency unlocking device assembly 48K-370 with the screws 48K-360 to the post assembly 48K-270.

(f) Attach the angle 48K-350 with the screws 48K-300 and the washers 48K-250 to the aft side wall assembly 48K-010.

(g) Attach the angles 48K-220 with the screws 48K-240 and the washers 48K-250 to the aft side wall assembly 48K-010.

(h) Attach the oxygen container assy 48K-230 with the screws 48K-240 and the washers 48K-250 to the angles 48K-220.

(i) Attach the ground cable in accordance with the Process and Material Specification PMS 01-04-58 to the oxygen container assy 48K-230.

(j) Attach the angle 48K-190 with the screws 48K-240 and the washers 48K-250 to the aft side wall assembly 48K-010.

(k) Attach the cover oxygen container assy 48K-180 with the screws 48K-200 and the nuts 48K-210 to the angle 48K-190.

(l) Attach the studs 48K-260 and the washers 48K-250 to the cover oxygen container assy 48K-180.

(m) Attach the lavatory picture frame kit 48K-440 with the screws 48K-450 to the aft side wall assembly 48K-010.

(n) Attach the screws 48K-340 to the aft side wall assembly 48K-010.

(o) Attach the toilet seat cover dispenser 48K-330 to the screws 48K-340.

(p) Install and assemble the handle assemblies 48K-140 as follows:

1 Attach the special screws 48K-150 and the special washers 48K-170 to the aft side wall assembly 48K-010.

2 Attach the handle assemblies 48K-140 to the aft side wall assembly 48K-010.

3 Attach the security pins 48K-160 to the handle assemblies 48K-140.

SUB TASK 25-41-51-410-084-B01

D2547160900200 D2549010404400 D2549010406200 D2549020300400 D2549020300800 D2549020408000 D2549020409200 D2549020409400 D2549020409600 D2549030412800 D2549030413000 D2549030702400 D2549030705200 R225401689-004 R225401689-006 R225401691-000 R225401691-002

2. Installation of the Side Wall (48K-1)

(a) Attach the kick strip 48K-460.

(b) Attach the fittings 48K-020, 48K-030 with the screws 48K-040, 48K-050 to the aft side wall assembly 48K-010.

(c) Assemble the post assembly 48K-270 as follows:

1 Attach the screws 48K-280.

(d) Attach the post assembly 48K-270 with the screws 48K-300, 48K-320, the washers 48K-250 and the caps 48K-310.

(e) Assemble the single door emergency unlocking device assembly 48K-370 as follows:

WARNING: BE CAREFUL WHEN YOU USE MATERIAL NO. 08-007 SEALANT, HIGH TEMPERATURE. OBEY THE MATERIAL MANUFACTURER'S INSTRUCTIONS.

1 Apply the Material No. 08-007 Sealant, High Temperature to the snap catch 48K-420 and to the pin 48K-410 and attach the emergency unlocking device pivot 48K-400, the snap catch 48K-420 and the pin 48K-410 to the emergency unlocking device housing 48K-380.

NOTE: Adjust the snap catch 48K-420 a half turn before stop.

WARNING: BE CAREFUL WHEN YOU USE MATERIAL NO. 08-007 SEALANT, HIGH TEMPERATURE. OBEY THE MATERIAL MANUFACTURER'S INSTRUCTIONS.

2 Apply the Material No. 08-007 Sealant, High Temperature to the bolt 48K-430 and attach the emergency unlocking device strike 48K-390 with the bolt 48K-430 to the emergency unlocking device housing 48K-380.

(f) Attach the single door emergency unlocking device assembly 48K-370 with the screws 48K-360 to the post assembly 48K-270.

(g) Attach the angle 48K-350 with the screws 48K-300 and the washers 48K-250 to the aft side wall assembly 48K-010.

(h) Attach the angles 48K-220 with the screws 48K-240 and the washers 48K-250 to the aft side wall assembly 48K-010.

(i) Attach the oxygen container assy 48K-230 with the screws 48K-240, 48K-242 and the washers 48K-250 to the angles 48K-220.

(j) Attach the ground cable in accordance with the Process and Material Specification PMS 01-04-58 to the oxygen container assy 48K-230.

(k) Attach the angle 48K-190 with the screws 48K-240 and the washers 48K-250 to the aft side wall assembly 48K-010.

(l) Attach the cover oxygen container assy 48K-180 with the screws 48K-200 and the nuts 48K-210 to the angle 48K-190.

(m) Attach the studs 48K-260 and the washers 48K-250 to the cover oxygen container assy 48K-180.

(n) Attach the screws 48K-340 to the aft side wall assembly 48K-010.

(o) Attach the toilet seat cover dispenser 48K-330 to the screws 48K-340.

(p) Install and assemble the handle assemblies 48K-140 as follows:

1 Attach the special screws 48K-150 and the special washers 48K-170 to the aft side wall assembly 48K-010.

2 Attach the handle assemblies 48K-140 to the aft side wall assembly 48K-010.

3 Attach the security pins 48K-160 to the handle assemblies 48K-140.

SUB TASK 25-41-51-410-084-C01
D2549020300600 D2549020403600 D2549020409800 R225401643-006 R225401643-008

3. Installation of the Side Wall (48K-1)

(a) Attach the fittings 48K-020, 48K-030 with the screws 48K-040, 48K-050 to the aft side wall assembly 48K-010.

(b) Assemble the post assembly 48K-270 as follows:

1 Attach the screws 48K-280.

(c) Attach the post assembly 48K-270 with the screws 48K-300, 48K-320, the washers 48K-250 and the caps 48K-310.

(d) Assemble the single door emergency unlocking device assembly 48K-370 as follows:

WARNING: **BE CAREFUL WHEN YOU USE MATERIAL NO. 08-007 SEALANT, HIGH TEMPERATURE. OBEY THE MATERIAL MANUFACTURER'S INSTRUCTIONS.**

1 Apply the Material No. 08-007 Sealant, High Temperature to the snap catch 48K-420 and to the pin 48K-410 and attach the emergency unlocking device pivot 48K-400, the snap catch 48K-420 and the pin 48K-410 to the emergency unlocking device housing 48K-380.

NOTE: **Adjust the snap catch 48K-420 a half turn before stop.**

WARNING: **BE CAREFUL WHEN YOU USE MATERIAL NO. 08-007 SEALANT, HIGH TEMPERATURE. OBEY THE MATERIAL MANUFACTURER'S INSTRUCTIONS.**

2 Apply the Material No. 08-007 Sealant, High Temperature to the bolt 48K-430 and attach the emergency unlocking device strike 48K-390 with the bolt 48K-430 to the emergency unlocking device housing 48K-380.

(e) Attach the single door emergency unlocking device assembly 48K-370 with the screws 48K-360 to the post assembly 48K-270.

(f) Attach the angle 48K-350 with the screws 48K-300 and the washers 48K-250 to the aft side wall assembly 48K-010.

(g) Attach the angles 48K-220 with the screws 48K-240 and the washers 48K-250 to the aft side wall assembly 48K-010.

(h) Attach the oxygen container assy 48K-230 with the screws 48K-240, 48K-242 and the washers 48K-250 to the angles 48K-220.

(i) Attach the ground cable in accordance with the Process and Material Specification PMS 01-04-58 to the oxygen container assy 48K-230.

(j) Attach the angle 48K-190 with the screws 48K-240 and the washers 48K-250 to the aft side wall assembly 48K-010.

(k) Attach the cover oxygen container assy 48K-180 with the screws 48K-200 and the nuts 48K-210 to the angle 48K-190.

(l) Attach the studs 48K-260 and the washers 48K-250 to the cover oxygen container assy 48K-180.

(m) Install and assemble the handle assemblies 48K-140 as follows:

1 Attach the special screws 48K-150 and the special washers 48K-170 to the aft side wall assembly 48K-010.

2 Attach the handle assemblies 48K-140 to the aft side wall assembly 48K-010.

3 Attach the security pins 48K-160 to the handle assemblies 48K-140.

SUB TASK 25-41-51-410-084-D01
D2547160900400 D2549010401600 D2549010613600 D2549020410600 D2549020804400 R225401602-000

4. Installation of the Side Wall (48K-1)

(a) Attach the fittings 48K-020, 48K-030 with the screws 48K-040, 48K-050 to the aft side wall assembly 48K-010.

(b) Assemble the post assembly 48K-270 as follows:

1 Attach the screws 48K-280.

(c) Attach the post assembly 48K-270 with the screws 48K-300, 48K-320, the washers 48K-250 and the caps 48K-310.

(d) Assemble the single door emergency unlocking device assembly 48K-370 as follows:

WARNING: BE CAREFUL WHEN YOU USE MATERIAL NO. 08-007 SEALANT, HIGH TEMPERATURE. OBEY THE MATERIAL MANUFACTURER'S INSTRUCTIONS.

1 Apply the Material No. 08-007 Sealant, High Temperature to the snap catch 48K-420 and to the pin 48K-410 and attach the emergency unlocking device pivot 48K-400, the snap catch 48K-420 and the pin 48K-410 to the emergency unlocking device housing 48K-380.

NOTE: Adjust the snap catch 48K-420 a half turn before stop.

WARNING: BE CAREFUL WHEN YOU USE MATERIAL NO. 08-007 SEALANT, HIGH TEMPERATURE. OBEY THE MATERIAL MANUFACTURER'S INSTRUCTIONS.

2 Apply the Material No. 08-007 Sealant, High Temperature to the bolt 48K-430 and attach the emergency unlocking device strike 48K-390 with the bolt 48K-430 to the emergency unlocking device housing 48K-380.

(e) Attach the single door emergency unlocking device assembly 48K-370 with the screws 48K-360 to the post assembly 48K-270.

(f) Attach the angle 48K-350 with the screws 48K-300 and the washers 48K-250 to the aft side wall assembly 48K-010.

(g) Attach the angles 48K-220 with the screws 48K-240 and the washers 48K-250 to the aft side wall assembly 48K-010.

(h) Attach the oxygen container assy 48K-230 with the screws 48K-240, 48K-242 and the washers 48K-250 to the angles 48K-220.

(i) Attach the ground cable in accordance with the Process and Material Specification PMS 01-04-58 to the oxygen container assy 48K-230.

(j) Attach the angle 48K-190 with the screws 48K-240 and the washers 48K-250 to the aft side wall assembly 48K-010.

(k) Attach the cover oxygen container assy 48K-180 with the screws 48K-200 and the nuts 48K-210 to the angle 48K-190.

(l) Attach the studs 48K-260 and the washers 48K-250 to the cover oxygen container assy 48K-180.

(m) Install and assemble the handle assemblies 48K-140 as follows:

1 Attach the special screws 48K-150 and the special washers 48K-170 to the aft side wall assembly 48K-010.

2 Attach the handle assemblies 48K-140 to the aft side wall assembly 48K-010.

3 Attach the security pins 48K-160 to the handle assemblies 48K-140.

TASK 25-41-51-400-825-N01

D2549010402400 D2549010405000 D2549010405400 D2549010405800 D2549010406400 D2549010407000 D2549020301000 D2549020410400 D2549020410800 D2549020411600 D2549020411800 D2549020413000 D2549030413400 D2549030413600 D2549030414400 D2549030414600 D2549030704400 D2549030705600 R225401199-012 R225401627-004

249. Installation of the Side Wall

A. General

This task gives you the installation and assembly procedures of the component.

B. Job Set-up Information

(1) Consumable Materials

REFERENCE	DESIGNATION
08-007	Sealant, High Temperature

Table 7042
Consumable Materials

C. Procedure

WARNING: **BE CAREFUL WHEN YOU USE SOLVENTS/CLEANING AGENTS, SEALANTS AND OTHER MATERIALS. OBEY THE MATERIAL MANUFACTURER'S INSTRUCTIONS AND THE LOCAL REGULATIONS. MAKE SURE THAT THERE IS A GOOD FLOW OF AIR THROUGH THE WORK AREA. DO NOT BREATHE THE FUMES. DO NOT SMOKE. DO NOT USE THESE MATERIALS NEAR A FLAME, SPARKS OR SOURCES OF HEAT. USE PROTECTIVE CLOTHING, GOGGLES AND GLOVES. IF YOU GET ONE OF THESE MATERIALS ON YOUR SKIN OR IN YOUR EYES, FLUSH IT AWAY WITH A FLOW OF CLEAN WATER. IF YOU GET ONE OF THESE MATERIALS IN YOUR MOUTH, GET IMMEDIATE MEDICAL AID. IN GENERAL, THESE MATERIALS ARE POISONOUS, FLAMMABLE AND SKIN IRRITANTS.**

WARNING: **KEEP ALL HYDROCARBONS (FUELS, LUBRICANTS, ETC.) AWAY FROM ALL SOURCES OF OXYGEN. OXYGEN BECOMES EXPLOSIVE WHEN IT TOUCHES HYDROCARBONS.**

WARNING: **TO PREVENT CONTAMINATION OF THE OXYGEN SYSTEM, MAKE SURE THAT YOUR HANDS AND ALL THE TOOLS ARE CLEAN.**

CAUTION: **DO ALL THE WORK ON A CLEAN, SOFT SURFACE TO PREVENT DAMAGE TO THE COMPONENTS.**

CAUTION: **MAKE SURE THAT ALL THE PARTS ARE CLEAN BEFORE YOU ASSEMBLE THEM.**

SUB TASK 25-41-51-410-087-A01
D2549030413400 D2549030704400

1. Installation of the Side Wall (48L-1)

   (a) Attach the fittings 48L-020, 48L-030 with the screws 48L-040, 48L-050 to the aft side wall assembly 48L-010.

   (b) Assemble the post assembly 48L-270 as follows:

      1 Attach the screws 48L-280.

   (c) Attach the post assembly 48L-270 with the screws 48L-300, 48L-320, the washers 48L-250 and the caps 48L-310.

   (d) Assemble the single door emergency unlocking device assembly 48L-370 as follows:

      WARNING: **BE CAREFUL WHEN YOU USE MATERIAL NO. 08-007 SEALANT, HIGH TEMPERATURE. OBEY THE MATERIAL MANUFACTURER'S INSTRUCTIONS.**

      1 Apply the Material No. 08-007 Sealant, High Temperature to the snap catch 48L-420 and to the pin 48L-410 and attach the emergency unlocking device pivot 48L-400, the snap catch 48L-420 and the pin 48L-410 to the emergency unlocking device housing 48L-380.

      NOTE: **Adjust the snap catch 48L-420 a half turn before stop.**

      WARNING: **BE CAREFUL WHEN YOU USE MATERIAL NO. 08-007 SEALANT, HIGH TEMPERATURE. OBEY THE MATERIAL MANUFACTURER'S INSTRUCTIONS.**

      2 Apply the Material No. 08-007 Sealant, High Temperature to the bolt 48L-430 and attach the emergency unlocking device strike 48L-390 with the bolt 48L-430 to the emergency unlocking device housing 48L-380.

   (e) Attach the single door emergency unlocking device assembly 48L-370 with the screws 48L-360 to the post assembly 48L-270.

   (f) Attach the angle 48L-350 with the screws 48L-300 and the washers 48L-250 to the aft side wall assembly 48L-010.

(g) Attach the angles 48L-220 with the screws 48L-240 and the washers 48L-250 to the aft side wall assembly 48L-010.

(h) Attach the oxygen container assy 48L-230 with the screws 48L-240 and the washers 48L-250 to the angles 48L-220.

(i) Attach the ground cable in accordance with the Process and Material Specification PMS 01-04-58 to the oxygen container assy 48L-230.

(j) Attach the hose 48L-460 to the oxygen container assy 48L-230.

(k) Attach the hose 48L-460 with the clamps 48L-490, the screws 48L-470 and the washers 48L-480 to the aft side wall assembly 48L-010.

(l) Attach the angle 48L-190 with the screws 48L-240 and the washers 48L-250 to the aft side wall assembly 48L-010.

(m) Attach the cover oxygen container assy 48L-180 with the screws 48L-200 and the nuts 48L-210 to the angle 48L-190.

(n) Attach the studs 48L-260 and the washers 48L-250 to the cover oxygen container assy 48L-180.

(o) Attach the coat hook 48L-440 with the screw 48L-450.

(p) Attach the screws 48L-340 to the aft side wall assembly 48L-010.

(q) Attach the toilet seat cover dispenser 48L-330 to the screws 48L-340.

(r) Install and assemble the handle assemblies 48L-140 as follows:

1 Attach the special screws 48L-150 and the special washers 48L-170 to the aft side wall assembly 48L-010.

2 Attach the handle assemblies 48L-140 to the aft side wall assembly 48L-010.

3 Attach the security pins 48L-160 to the handle assemblies 48L-140.

SUB TASK 25-41-51-410-087-B01
D2549030414600 D2549030705600

2. Installation of the Side Wall (48L-1)

(a) Attach the fittings 48L-020, 48L-030 with the screws 48L-040, 48L-050 to the aft side wall assembly 48L-010.

(b) Assemble the post assembly 48L-270 as follows:

1 Attach the screws 48L-280.

(c) Attach the post assembly 48L-270 with the screws 48L-300, 48L-320, the washers 48L-250 and the caps 48L-310.

(d) Assemble the single door emergency unlocking device assembly 48L-370 as follows:

WARNING: BE CAREFUL WHEN YOU USE MATERIAL NO. 08-007 SEALANT, HIGH TEMPERATURE. OBEY THE MATERIAL MANUFACTURER'S INSTRUCTIONS.

1 Apply the Material No. 08-007 Sealant, High Temperature to the snap catch 48L-420 and to the pin 48L-410 and attach the emergency unlocking device pivot 48L-400, the snap catch 48L-420 and the pin 48L-410 to the emergency unlocking device housing 48L-380.

NOTE: Adjust the snap catch 48L-420 a half turn before stop.

WARNING: BE CAREFUL WHEN YOU USE MATERIAL NO. 08-007 SEALANT, HIGH TEMPERATURE. OBEY THE MATERIAL MANUFACTURER'S INSTRUCTIONS.

2 Apply the Material No. 08-007 Sealant, High Temperature to the bolt 48L-430 and attach the emergency unlocking device strike 48L-390 with the bolt 48L-430 to the emergency unlocking device housing 48L-380.

(e) Attach the single door emergency unlocking device assembly 48L-370 with the screws 48L-360 to the post assembly 48L-270.

(f) Attach the angle 48L-350 with the screws 48L-300 and the washers 48L-250 to the aft side wall assembly 48L-010.

(g) Attach the angles 48L-220 with the screws 48L-240 and the washers 48L-250 to the aft side wall assembly 48L-010.

(h) Attach the oxygen container assy 48L-230 with the screws 48L-240 and the washers 48L-250 to the angles 48L-220.

(i) Attach the ground cable in accordance with the Process and Material Specification PMS 01-04-58 to the oxygen container assy 48L-230.

(j) Attach the angle 48L-190 with the screws 48L-240 and the washers 48L-250 to the aft side wall assembly 48L-010.

(k) Attach the cover oxygen container assy 48L-180 with the screws 48L-200 and the nuts 48L-210 to the angle 48L-190.

(l) Attach the studs 48L-260 and the washers 48L-250 to the cover oxygen container assy 48L-180.

(m) Attach the coat hook 48L-440 with the screw 48L-450.

(n) Attach the screws 48L-340 to the aft side wall assembly 48L-010.

(o) Attach the toilet seat cover dispenser 48L-330 to the screws 48L-340.

(p) Install and assemble the handle assemblies 48L-140 as follows:

1 Attach the special screws 48L-150 and the special washers 48L-170 to the aft side wall assembly 48L-010.

2 Attach the handle assemblies 48L-140 to the aft side wall assembly 48L-010.

3 Attach the security pins 48L-160 to the handle assemblies 48L-140.

SUB TASK 25-41-51-410-087-C01
D2549010405400

3. Installation of the Side Wall (48L-1)

(a) Attach the fittings 48L-020, 48L-030 with the screws 48L-040, 48L-050 to the aft side wall assembly 48L-010.

(b) Assemble the post assembly 48L-270 as follows:

1 Attach the screws 48L-280.

(c) Attach the post assembly 48L-270 with the screws 48L-300, 48L-320, the washers 48L-250 and the caps 48L-310.

(d) Assemble the single door emergency unlocking device assembly 48L-370 as follows:

WARNING: **BE CAREFUL WHEN YOU USE MATERIAL NO. 08-007 SEALANT, HIGH TEMPERATURE. OBEY THE MATERIAL MANUFACTURER'S INSTRUCTIONS.**

1 Apply the Material No. 08-007 Sealant, High Temperature to the snap catch 48L-420 and to the pin 48L-410 and attach the emergency unlocking device pivot 48L-400, the snap catch 48L-420 and the pin 48L-410 to the emergency unlocking device housing 48L-380.

NOTE: **Adjust the snap catch 48L-420 a half turn before stop.**

WARNING: **BE CAREFUL WHEN YOU USE MATERIAL NO. 08-007 SEALANT, HIGH TEMPERATURE. OBEY THE MATERIAL MANUFACTURER'S INSTRUCTIONS.**

2 Apply the Material No. 08-007 Sealant, High Temperature to the bolt 48L-430 and attach the emergency unlocking device strike 48L-390 with the bolt 48L-430 to the emergency unlocking device housing 48L-380.

(e) Attach the single door emergency unlocking device assembly 48L-370 with the screws 48L-360 to the post assembly 48L-270.

(f) Attach the angle 48L-350 with the screws 48L-300 and the washers 48L-250 to the aft side wall assembly 48L-010.

(g) Attach the angles 48L-220 with the screws 48L-240 and the washers 48L-250 to the aft side wall assembly 48L-010.

(h) Attach the oxygen container assy 48L-230 with the screws 48L-240 and the washers 48L-250 to the angles 48L-220.

(i) Attach the ground cable in accordance with the Process and Material Specification PMS 01-04-58 to the oxygen container assy 48L-230.

(j) Attach the angle 48L-190 with the screws 48L-240 and the washers 48L-250 to the aft side wall assembly 48L-010.

(k) Attach the cover oxygen container assy 48L-180 with the screws 48L-200 and the nuts 48L-210 to the angle 48L-190.

(l) Attach the studs 48L-260 and the washers 48L-250 to the cover oxygen container assy 48L-180.

(m) Attach the coat hook 48L-440 with the screw 48L-450.

(n) Attach the screws 48L-340 to the aft side wall assembly 48L-010.

(o) Attach the toilet seat cover dispenser 48L-330 to the screws 48L-340.

(p) Install and assemble the handle assemblies 48L-140 as follows:

1 Attach the special screws 48L-150 and the special washers 48L-170 to the aft side wall assembly 48L-010.

2 Attach the handle assemblies 48L-140 to the aft side wall assembly 48L-010.

3 Attach the security pins 48L-160 to the handle assemblies 48L-140.

SUB TASK 25-41-51-410-087-D01
D2549020410400 D2549030414400

4. Installation of the Side Wall (48L-1)

(a) Attach the fittings 48L-020, 48L-030 with the screws 48L-040, 48L-050 to the aft side wall assembly 48L-010.

(b) Assemble the post assembly 48L-270 as follows:

1 Attach the screws 48L-280.

(c) Attach the post assembly 48L-270 with the screws 48L-300, 48L-320, the washers 48L-250 and the caps 48L-310.

(d) Assemble the single door emergency unlocking device assembly 48L-370 as follows:

WARNING: BE CAREFUL WHEN YOU USE MATERIAL NO. 08-007 SEALANT, HIGH TEMPERATURE. OBEY THE MATERIAL MANUFACTURER'S INSTRUCTIONS.

1 Apply the Material No. 08-007 Sealant, High Temperature to the snap catch 48L-420 and to the pin 48L-410 and attach the emergency unlocking device pivot 48L-400, the snap catch 48L-420 and the pin 48L-410 to the emergency unlocking device housing 48L-380.

NOTE: Adjust the snap catch 48L-420 a half turn before stop.

WARNING: **BE CAREFUL WHEN YOU USE MATERIAL NO. 08-007 SEALANT, HIGH TEMPERATURE. OBEY THE MATERIAL MANUFACTURER'S INSTRUCTIONS.**

2 Apply the Material No. 08-007 Sealant, High Temperature to the bolt 48L-430 and attach the emergency unlocking device strike 48L-390 with the bolt 48L-430 to the emergency unlocking device housing 48L-380.

(e) Attach the single door emergency unlocking device assembly 48L-370 with the screws 48L-360 to the post assembly 48L-270.

(f) Attach the angle 48L-350 with the screws 48L-300 and the washers 48L-250 to the aft side wall assembly 48L-010.

(g) Attach the angles 48L-220 with the screws 48L-240 and the washers 48L-250 to the aft side wall assembly 48L-010.

(h) Attach the oxygen container assy 48L-230 with the screws 48L-240 and the washers 48L-250 to the angles 48L-220.

(i) Attach the ground cable in accordance with the Process and Material Specification PMS 01-04-58 to the oxygen container assy 48L-230.

(j) Attach the angle 48L-190 with the screws 48L-240 and the washers 48L-250 to the aft side wall assembly 48L-010.

(k) Attach the cover oxygen container assy 48L-180 with the screws 48L-200 and the nuts 48L-210 to the angle 48L-190.

(l) Attach the studs 48L-260 and the washers 48L-250 to the cover oxygen container assy 48L-180.

(m) Attach the screws 48L-340 to the aft side wall assembly 48L-010.

(n) Attach the toilet seat cover dispenser 48L-330 to the screws 48L-340.

(o) Install and assemble the handle assemblies 48L-140 as follows:

1 Attach the special screws 48L-150 and the special washers 48L-170 to the aft side wall assembly 48L-010.

2 Attach the handle assemblies 48L-140 to the aft side wall assembly 48L-010.

3 Attach the security pins 48L-160 to the handle assemblies 48L-140.

SUB TASK 25-41-51-410-087-E01
D2549010402400 D2549010406400 D2549020410800 D2549020411800

5. Installation of the Side Wall (48L-1)

(a) Attach the fittings 48L-020, 48L-030 with the screws 48L-040, 48L-050 to the aft side wall assembly 48L-010.

(b) Assemble the post assembly 48L-270 as follows:

1 Attach the screws 48L-280.

(c) Attach the post assembly 48L-270 with the screws 48L-300, 48L-320, the washers 48L-250 and the caps 48L-310.

(d) Assemble the single door emergency unlocking device assembly 48L-370 as follows:

WARNING: BE CAREFUL WHEN YOU USE MATERIAL NO. 08-007 SEALANT, HIGH TEMPERATURE. OBEY THE MATERIAL MANUFACTURER'S INSTRUCTIONS.

1 Apply the Material No. 08-007 Sealant, High Temperature to the snap catch 48L-420 and to the pin 48L-410 and attach the emergency unlocking device pivot 48L-400, the snap catch 48L-420 and the pin 48L-410 to the emergency unlocking device housing 48L-380.

NOTE: Adjust the snap catch 48L-420 a half turn before stop.

WARNING: BE CAREFUL WHEN YOU USE MATERIAL NO. 08-007 SEALANT, HIGH TEMPERATURE. OBEY THE MATERIAL MANUFACTURER'S INSTRUCTIONS.

2 Apply the Material No. 08-007 Sealant, High Temperature to the bolt 48L-430 and attach the emergency unlocking device strike 48L-390 with the bolt 48L-430 to the emergency unlocking device housing 48L-380.

(e) Attach the single door emergency unlocking device assembly 48L-370 with the screws 48L-360 to the post assembly 48L-270.

(f) Attach the angle 48L-350 with the screws 48L-300 and the washers 48L-250 to the aft side wall assembly 48L-010.

(g) Attach the angles 48L-220 with the screws 48L-240 and the washers 48L-250 to the aft side wall assembly 48L-010.

(h) Attach the oxygen container assy 48L-230 with the screws 48L-240 and the washers 48L-250 to the angles 48L-220.

(i) Attach the ground cable in accordance with the Process and Material Specification PMS 01-04-58 to the oxygen container assy 48L-230.

(j) Attach the angle 48L-190 with the screws 48L-240 and the washers 48L-250 to the aft side wall assembly 48L-010.

(k) Attach the cover oxygen container assy 48L-180 with the screws 48L-200 and the nuts 48L-210 to the angle 48L-190.

(l) Attach the studs 48L-260 and the washers 48L-250 to the cover oxygen container assy 48L-180.

(m) Attach the screws 48L-340 to the aft side wall assembly 48L-010.

(n) Attach the toilet seat cover dispenser 48L-330 to the screws 48L-340.

(o) Install and assemble the handle assemblies 48L-140 as follows:

1 Attach the special screws 48L-150 and the special washers 48L-170 to the aft side wall assembly 48L-010.

2 Attach the handle assemblies 48L-140 to the aft side wall assembly 48L-010.

3 Attach the security pins 48L-160 to the handle assemblies 48L-140.

SUB TASK 25-41-51-410-087-F01
D2549010405000 D2549010405800 D2549010407000

6. Installation of the Side Wall (48L-1)

(a) Attach the fittings 48L-020, 48L-030 with the screws 48L-040, 48L-050 to the aft side wall assembly 48L-010.

(b) Assemble the post assembly 48L-270 as follows:

1 Attach the screws 48L-280.

(c) Attach the post assembly 48L-270 with the screws 48L-300, 48L-320, the washers 48L-250 and the caps 48L-310.

(d) Assemble the single door emergency unlocking device assembly 48L-370 as follows:

WARNING: BE CAREFUL WHEN YOU USE MATERIAL NO. 08-007 SEALANT, HIGH TEMPERATURE. OBEY THE MATERIAL MANUFACTURER'S INSTRUCTIONS.

1 Apply the Material No. 08-007 Sealant, High Temperature to the snap catch 48L-420 and to the pin 48L-410 and attach the emergency unlocking device pivot 48L-400, the snap catch 48L-420 and the pin 48L-410 to the emergency unlocking device housing 48L-380.

NOTE: Adjust the snap catch 48L-420 a half turn before stop.

WARNING: BE CAREFUL WHEN YOU USE MATERIAL NO. 08-007 SEALANT, HIGH TEMPERATURE. OBEY THE MATERIAL MANUFACTURER'S INSTRUCTIONS.

2 Apply the Material No. 08-007 Sealant, High Temperature to the bolt 48L-430 and attach the emergency unlocking device strike 48L-390 with the bolt 48L-430 to the emergency unlocking device housing 48L-380.

(e) Attach the single door emergency unlocking device assembly 48L-370 with the screws 48L-360 to the post assembly 48L-270.

(f) Attach the angle 48L-350 with the screws 48L-300 and the washers 48L-250 to the aft side wall assembly 48L-010.

(g) Attach the angles 48L-220 with the screws 48L-240 and the washers 48L-250 to the aft side wall assembly 48L-010.

(h) Attach the oxygen container assy 48L-230 with the screws 48L-240 and the washers 48L-250 to the angles 48L-220.

(i) Attach the ground cable in accordance with the Process and Material Specification PMS 01-04-58 to the oxygen container assy 48L-230.

(j) Attach the angle 48L-190 with the screws 48L-240 and the washers 48L-250 to the aft side wall assembly 48L-010.

(k) Attach the cover oxygen container assy 48L-180 with the screws 48L-200 and the nuts 48L-210 to the angle 48L-190.

(l) Attach the studs 48L-260 and the washers 48L-250 to the cover oxygen container assy 48L-180.

(m) Install and assemble the handle assemblies 48L-140 as follows:

1 Attach the special screws 48L-150 and the special washers 48L-170 to the aft side wall assembly 48L-010.

2 Attach the handle assemblies 48L-140 to the aft side wall assembly 48L-010.

3 Attach the security pins 48L-160 to the handle assemblies 48L-140.

SUB TASK 25-41-51-410-087-G01
D2549020301000 D2549020411600 D2549020413000 D2549030413600 R225401199-012 R225401627-004

7. Installation of the Side Wall (48L-1)

(a) Attach the fittings 48L-020, 48L-030 with the screws 48L-040, 48L-050 to the aft side wall assembly 48L-010.

(b) Assemble the post assembly 48L-270 as follows:

1 Attach the screws 48L-280.

(c) Attach the post assembly 48L-270 with the screws 48L-300, 48L-320, the washers 48L-250 and the caps 48L-310.

(d) Assemble the single door emergency unlocking device assembly 48L-370 as follows:

WARNING: BE CAREFUL WHEN YOU USE MATERIAL NO. 08-007 SEALANT, HIGH TEMPERATURE. OBEY THE MATERIAL MANUFACTURER'S INSTRUCTIONS.

1 Apply the Material No. 08-007 Sealant, High Temperature to the snap catch 48L-420 and to the pin 48L-410 and attach the emergency unlocking device pivot 48L-400, the snap catch 48L-420 and the pin 48L-410 to the emergency unlocking device housing 48L-380.

NOTE: Adjust the snap catch 48L-420 a half turn before stop.

WARNING: **BE CAREFUL WHEN YOU USE MATERIAL NO. 08-007 SEALANT, HIGH TEMPERATURE. OBEY THE MATERIAL MANUFACTURER'S INSTRUCTIONS.**

2 Apply the Material No. 08-007 Sealant, High Temperature to the bolt 48L-430 and attach the emergency unlocking device strike 48L-390 with the bolt 48L-430 to the emergency unlocking device housing 48L-380.

(e) Attach the single door emergency unlocking device assembly 48L-370 with the screws 48L-360 to the post assembly 48L-270.

(f) Attach the angle 48L-350 with the screws 48L-300 and the washers 48L-250 to the aft side wall assembly 48L-010.

(g) Attach the angles 48L-220 with the screws 48L-240 and the washers 48L-250 to the aft side wall assembly 48L-010.

(h) Attach the oxygen container assy 48L-230 with the screws 48L-240, 48L-242 and the washers 48L-250 to the angles 48L-220.

(i) Attach the ground cable in accordance with the Process and Material Specification PMS 01-04-58 to the oxygen container assy 48L-230.

(j) Attach the angle 48L-190 with the screws 48L-240 and the washers 48L-250 to the aft side wall assembly 48L-010.

(k) Attach the cover oxygen container assy 48L-180 with the screws 48L-200 and the nuts 48L-210 to the angle 48L-190.

(l) Attach the studs 48L-260 and the washers 48L-250 to the cover oxygen container assy 48L-180.

(m) Install and assemble the handle assemblies 48L-140 as follows:

1 Attach the special screws 48L-150 and the special washers 48L-170 to the aft side wall assembly 48L-010.

2 Attach the handle assemblies 48L-140 to the aft side wall assembly 48L-010.

3 Attach the security pins 48L-160 to the handle assemblies 48L-140.

TASK 25-41-51-400-825-P01
D2549020301600 D2549020412400 D2549020413200 D2549020413600 D2549020413800 D2549020414000 D2549020414200 D2549020414600 D2549020414800 D2549030702000 D2549030702200 D2549030703200 R225401136-008 R225401136-014

250. Installation of the Side Wall

A. General

This task gives you the installation and assembly procedures of the component.

B. Job Set-up Information
(1) Consumable Materials

REFERENCE	DESIGNATION
08-007	Sealant, High Temperature

Table 7043
Consumable Materials

C. Procedure

WARNING: **BE CAREFUL WHEN YOU USE SOLVENTS/CLEANING AGENTS, SEALANTS AND OTHER MATERIALS. OBEY THE MATERIAL MANUFACTURER'S INSTRUCTIONS AND THE LOCAL REGULATIONS. MAKE SURE THAT THERE IS A GOOD FLOW OF AIR THROUGH THE WORK AREA. DO NOT BREATHE THE FUMES. DO NOT SMOKE. DO NOT USE THESE MATERIALS NEAR A FLAME, SPARKS OR SOURCES OF HEAT. USE PROTECTIVE CLOTHING, GOGGLES AND GLOVES. IF YOU GET ONE OF THESE MATERIALS ON YOUR SKIN OR IN YOUR EYES, FLUSH IT AWAY WITH A FLOW OF CLEAN WATER. IF YOU GET ONE OF THESE MATERIALS IN YOUR MOUTH, GET IMMEDIATE MEDICAL AID. IN GENERAL, THESE MATERIALS ARE POISONOUS, FLAMMABLE AND SKIN IRRITANTS.**

WARNING: **KEEP ALL HYDROCARBONS (FUELS, LUBRICANTS, ETC.) AWAY FROM ALL SOURCES OF OXYGEN. OXYGEN BECOMES EXPLOSIVE WHEN IT TOUCHES HYDROCARBONS.**

WARNING: **TO PREVENT CONTAMINATION OF THE OXYGEN SYSTEM, MAKE SURE THAT YOUR HANDS AND ALL THE TOOLS ARE CLEAN.**

CAUTION: **DO ALL THE WORK ON A CLEAN, SOFT SURFACE TO PREVENT DAMAGE TO THE COMPONENTS.**

CAUTION: **MAKE SURE THAT ALL THE PARTS ARE CLEAN BEFORE YOU ASSEMBLE THEM.**

SUB TASK 25-41-51-410-088-A01
D2549030703200

1. Installation of the Side Wall (48M-1)

   (a) Attach the fittings 48M-020, 48M-030 with the screws 48M-040, 48M-050 to the aft side wall assembly 48M-010.

   (b) Assemble the post assembly 48M-270 as follows:

      1 Attach the screws 48M-280.

   (c) Attach the post assembly 48M-270 with the screws 48M-300, 48M-320, the washers 48M-250 and the caps 48M-310.

   (d) Assemble the single door emergency unlocking device assembly 48M-370 as follows:

      WARNING: **BE CAREFUL WHEN YOU USE MATERIAL NO. 08-007 SEALANT, HIGH TEMPERATURE. OBEY THE MATERIAL MANUFACTURER'S INSTRUCTIONS.**

      1 Apply the Material No. 08-007 Sealant, High Temperature to the snap catch 48M-420 and to the pin 48M-410 and attach the emergency unlocking device pivot 48M-400, the snap catch 48M-420 and the pin 48M-410 to the emergency unlocking device housing 48M-380.

      NOTE: **Adjust the snap catch 48M-420 a half turn before stop.**

      WARNING: **BE CAREFUL WHEN YOU USE MATERIAL NO. 08-007 SEALANT, HIGH TEMPERATURE. OBEY THE MATERIAL MANUFACTURER'S INSTRUCTIONS.**

      2 Apply the Material No. 08-007 Sealant, High Temperature to the bolt 48M-430 and attach the emergency unlocking device strike 48M-390 with the bolt 48M-430 to the emergency unlocking device housing 48M-380.

   (e) Attach the single door emergency unlocking device assembly 48M-370 with the screws 48M-360 to the post assembly 48M-270.

   (f) Attach the angle 48M-350 with the screws 48M-300 and the washers 48M-250 to the aft side wall assembly 48M-010.

(g) Attach the angles 48M-220 with the screws 48M-240 and the washers 48M-250 to the aft side wall assembly 48M-010.

(h) Attach the oxygen container assy 48M-230 with the screws 48M-240 and the washers 48M-250 to the angles 48M-220.

(i) Attach the ground cable in accordance with the Process and Material Specification PMS 01-04-58 to the oxygen container assy 48M-230.

(j) Attach the hose 48M-510 to the oxygen container assy 48M-230.

(k) Attach the hose 48M-510 with the clamps 48M-540, the screws 48M-520 and the washers 48M-530 to the aft side wall assembly 48M-010.

(l) Attach the angle 48M-190 with the screws 48M-240 and the washers 48M-250 to the aft side wall assembly 48M-010.

(m) Attach the cover oxygen container assy 48M-180 with the screws 48M-200 and the nuts 48M-210 to the angle 48M-190.

(n) Attach the studs 48M-260 and the washers 48M-250 to the cover oxygen container assy 48M-180.

(o) Attach the screws 48M-340 to the aft side wall assembly 48M-010.

(p) Attach the toilet seat cover dispenser 48M-330 to the screws 48M-340.

(q) Install and assemble the handle assemblies 48M-140 as follows:

1 Attach the special screws 48M-150 and the special washers 48M-170 to the aft side wall assembly 48M-010.

2 Attach the handle assemblies 48M-140 to the aft side wall assembly 48M-010.

3 Attach the security pins 48M-160 to the handle assemblies 48M-140.

SUB TASK 25-41-51-410-088-B01
D2549020414600

2. Installation of the Side Wall (48M-1)

(a) Attach the fittings 48M-020, 48M-030 with the screws 48M-040, 48M-050 to the aft side wall assembly 48M-010.

(b) Assemble the post assembly 48M-270 as follows:

1 Attach the screws 48M-280.

(c) Attach the post assembly 48M-270 with the screws 48M-300, 48M-320, the washers 48M-250 and the caps 48M-310.

(d) Assemble the single door emergency unlocking device assembly 48M-370 as follows:

WARNING: BE CAREFUL WHEN YOU USE MATERIAL NO. 08-007 SEALANT, HIGH TEMPERATURE. OBEY THE MATERIAL MANUFACTURER'S INSTRUCTIONS.

1 Apply the Material No. 08-007 Sealant, High Temperature to the snap catch 48M-420 and to the pin 48M-410 and attach the emergency unlocking device pivot 48M-400, the snap catch 48M-420 and the pin 48M-410 to the emergency unlocking device housing 48M-380.

NOTE: Adjust the snap catch 48M-420 a half turn before stop.

WARNING: BE CAREFUL WHEN YOU USE MATERIAL NO. 08-007 SEALANT, HIGH TEMPERATURE. OBEY THE MATERIAL MANUFACTURER'S INSTRUCTIONS.

2 Apply the Material No. 08-007 Sealant, High Temperature to the bolt 48M-430 and attach the emergency unlocking device strike 48M-390 with the bolt 48M-430 to the emergency unlocking device housing 48M-380.

(e) Attach the single door emergency unlocking device assembly 48M-370 with the screws 48M-360 to the post assembly 48M-270.

(f) Attach the angle 48M-350 with the screws 48M-300 and the washers 48M-250 to the aft side wall assembly 48M-010.

(g) Attach the angles 48M-220 with the screws 48M-240 and the washers 48M-250 to the aft side wall assembly 48M-010.

(h) Attach the oxygen container assy 48M-230 with the screws 48M-240 and the washers 48M-250 to the angles 48M-220.

(i) Attach the ground cable in accordance with the Process and Material Specification PMS 01-04-58 to the oxygen container assy 48M-230.

(j) Attach the angle 48M-190 with the screws 48M-240 and the washers 48M-250 to the aft side wall assembly 48M-010.

(k) Attach the cover oxygen container assy 48M-180 with the screws 48M-200 and the nuts 48M-210 to the angle 48M-190.

(l) Attach the studs 48M-260 and the washers 48M-250 to the cover oxygen container assy 48M-180.

(m) Attach the lavatory picture frame kit 48M-490 with the screws 48M-500 to the aft side wall assembly 48M-010.

(n) Attach the screws 48M-340 to the aft side wall assembly 48M-010.

(o) Attach the toilet seat cover dispenser 48M-330 to the screws 48M-340.

(p) Install and assemble the handle assemblies 48M-140 as follows:

1 Attach the special screws 48M-150 and the special washers 48M-170 to the aft side wall assembly 48M-010.

2 Attach the handle assemblies 48M-140 to the aft side wall assembly 48M-010.

3 Attach the security pins 48M-160 to the handle assemblies 48M-140.

SUB TASK 25-41-51-410-088-C01
D2549030702000

3. Installation of the Side Wall (48M-1)

(a) Attach the fittings 48M-020, 48M-030 with the screws 48M-040, 48M-050 to the aft side wall assembly 48M-010.

(b) Assemble the post assembly 48M-270 as follows:

1 Attach the screws 48M-280.

(c) Attach the post assembly 48M-270 with the screws 48M-300, 48M-320, the washers 48M-250 and the caps 48M-310.

(d) Assemble the single door emergency unlocking device assembly 48M-370 as follows:

WARNING: **BE CAREFUL WHEN YOU USE MATERIAL NO. 08-007 SEALANT, HIGH TEMPERATURE. OBEY THE MATERIAL MANUFACTURER'S INSTRUCTIONS.**

1 Apply the Material No. 08-007 Sealant, High Temperature to the snap catch 48M-420 and to the pin 48M-410 and attach the emergency unlocking device pivot 48M-400, the snap catch 48M-420 and the pin 48M-410 to the emergency unlocking device housing 48M-380.

NOTE: **Adjust the snap catch 48M-420 a half turn before stop.**

WARNING: **BE CAREFUL WHEN YOU USE MATERIAL NO. 08-007 SEALANT, HIGH TEMPERATURE. OBEY THE MATERIAL MANUFACTURER'S INSTRUCTIONS.**

2 Apply the Material No. 08-007 Sealant, High Temperature to the bolt 48M-430 and attach the emergency unlocking device strike 48M-390 with the bolt 48M-430 to the emergency unlocking device housing 48M-380.

(e) Attach the single door emergency unlocking device assembly 48M-370 with the screws 48M-360 to the post assembly 48M-270.

(f) Attach the angle 48M-350 with the screws 48M-300 and the washers 48M-250 to the aft side wall assembly 48M-010.

(g) Attach the angles 48M-220 with the screws 48M-240 and the washers 48M-250 to the aft side wall assembly 48M-010.

(h) Attach the oxygen container assy 48M-230 with the screws 48M-240 and the washers 48M-250 to the angles 48M-220.

(i) Attach the ground cable in accordance with the Process and Material Specification PMS 01-04-58 to the oxygen container assy 48M-230.

(j) Attach the angle 48M-190 with the screws 48M-240 and the washers 48M-250 to the aft side wall assembly 48M-010.

(k) Attach the cover oxygen container assy 48M-180 with the screws 48M-200 and the nuts 48M-210 to the angle 48M-190.

(l) Attach the studs 48M-260 and the washers 48M-250 to the cover oxygen container assy 48M-180.

(m) Attach the screws 48M-340 to the aft side wall assembly 48M-010.

(n) Attach the toilet seat cover dispenser 48M-330 to the screws 48M-340.

(o) Install and assemble the handle assemblies 48M-440 as follows:

1 Attach the screws 48M-460 and the washers 48M-470 to the aft side wall assembly 48M-010.

2 Attach the handle 48M-450 to the aft side wall assembly 48M-010.

3 Attach the setscrews 48M-480 to the handle 48M-450.

SUB TASK 25-41-51-410-088-D01
D2549020412400 D2549020413200

4. Installation of the Side Wall (48M-1)

(a) Attach the fittings 48M-020, 48M-030 with the screws 48M-040, 48M-050 to the aft side wall assembly 48M-010.

(b) Assemble the post assembly 48M-270 as follows:

1 Attach the screws 48M-280.

(c) Attach the post assembly 48M-270 with the screws 48M-300, 48M-320, the washers 48M-250 and the caps 48M-310.

(d) Assemble the single door emergency unlocking device assembly 48M-370 as follows:

WARNING: BE CAREFUL WHEN YOU USE MATERIAL NO. 08-007 SEALANT, HIGH TEMPERATURE. OBEY THE MATERIAL MANUFACTURER'S INSTRUCTIONS.

1 Apply the Material No. 08-007 Sealant, High Temperature to the snap catch 48M-420 and to the pin 48M-410 and attach the emergency unlocking device pivot 48M-400, the snap catch 48M-420 and the pin 48M-410 to the emergency unlocking device housing 48M-380.

NOTE: Adjust the snap catch 48M-420 a half turn before stop.

WARNING: BE CAREFUL WHEN YOU USE MATERIAL NO. 08-007 SEALANT, HIGH TEMPERATURE. OBEY THE MATERIAL MANUFACTURER'S INSTRUCTIONS.

2 Apply the Material No. 08-007 Sealant, High Temperature to the bolt 48M-430 and attach the emergency unlocking device strike 48M-390 with the bolt 48M-430 to the emergency unlocking device housing 48M-380.

(e) Attach the single door emergency unlocking device assembly 48M-370 with the screws 48M-360 to the post assembly 48M-270.

(f) Attach the angle 48M-350 with the screws 48M-300 and the washers 48M-250 to the aft side wall assembly 48M-010.

(g) Attach the angles 48M-220 with the screws 48M-240 and the washers 48M-250 to the aft side wall assembly 48M-010.

(h) Attach the oxygen container assy 48M-230 with the screws 48M-240 and the washers 48M-250 to the angles 48M-220.

(i) Attach the ground cable in accordance with the Process and Material Specification PMS 01-04-58 to the oxygen container assy 48M-230.

(j) Attach the angle 48M-190 with the screws 48M-240 and the washers 48M-250 to the aft side wall assembly 48M-010.

(k) Attach the cover oxygen container assy 48M-180 with the screws 48M-200 and the nuts 48M-210 to the angle 48M-190.

(l) Attach the studs 48M-260 and the washers 48M-250 to the cover oxygen container assy 48M-180.

(m) Attach the screws 48M-340 to the aft side wall assembly 48M-010.

(n) Attach the toilet seat cover dispenser 48M-330 to the screws 48M-340.

(o) Install and assemble the handle assemblies 48M-140 as follows:

1 Attach the special screws 48M-150 and the special washers 48M-170 to the aft side wall assembly 48M-010.

2 Attach the handle assemblies 48M-140 to the aft side wall assembly 48M-010.

3 Attach the security pins 48M-160 to the handle assemblies 48M-140.

SUB TASK 25-41-51-410-088-E01
D2549020414200

5. Installation of the Side Wall (48M-1)

(a) If removed, attach the kick strip 48M-550 to the aft side wall assembly 48M-010.

(b) Attach the fittings 48M-020, 48M-030 with the screws 48M-040, 48M-050 to the aft side wall assembly 48M-010.

(c) Assemble the post assembly 48M-270 as follows:

1 Attach the screws 48M-280.

(d) Attach the post assembly 48M-270 with the screws 48M-300, 48M-320, the washers 48M-250 and the caps 48M-310.

(e) Assemble the single door emergency unlocking device assembly 48M-370 as follows:

WARNING: BE CAREFUL WHEN YOU USE MATERIAL NO. 08-007 SEALANT, HIGH TEMPERATURE. OBEY THE MATERIAL MANUFACTURER'S INSTRUCTIONS.

1 Apply the Material No. 08-007 Sealant, High Temperature to the snap catch 48M-420 and to the pin 48M-410 and attach the emergency unlocking device pivot 48M-400, the snap catch 48M-420 and the pin 48M-410 to the emergency unlocking device housing 48M-380.

NOTE: Adjust the snap catch 48M-420 a half turn before stop.

WARNING: BE CAREFUL WHEN YOU USE MATERIAL NO. 08-007 SEALANT, HIGH TEMPERATURE. OBEY THE MATERIAL MANUFACTURER'S INSTRUCTIONS.

2 Apply the Material No. 08-007 Sealant, High Temperature to the bolt 48M-430 and attach the emergency unlocking device strike 48M-390 with the bolt 48M-430 to the emergency unlocking device housing 48M-380.

(f) Attach the single door emergency unlocking device assembly 48M-370 with the screws 48M-360 to the post assembly 48M-270.

(g) Attach the angle 48M-350 with the screws 48M-300 and the washers 48M-250 to the aft side wall assembly 48M-010.

(h) Attach the angles 48M-220 with the screws 48M-240 and the washers 48M-250 to the aft side wall assembly 48M-010.

(i) Attach the oxygen container assy 48M-230 with the screws 48M-240 and the washers 48M-250 to the angles 48M-220.

(j) Attach the ground cable in accordance with the Process and Material Specification PMS 01-04-58 to the oxygen container assy 48M-230.

(k) Attach the angle 48M-190 with the screws 48M-240 and the washers 48M-250 to the aft side wall assembly 48M-010.

(l) Attach the cover oxygen container assy 48M-180 with the screws 48M-200 and the nuts 48M-210 to the angle 48M-190.

(m) Attach the studs 48M-260 and the washers 48M-250 to the cover oxygen container assy 48M-180.

(n) Attach the screws 48M-340 to the aft side wall assembly 48M-010.

(o) Attach the toilet seat cover dispenser 48M-330 to the screws 48M-340.

(p) Install and assemble the handle assemblies 48M-140 as follows:

1 Attach the special screws 48M-150 and the special washers 48M-170 to the aft side wall assembly 48M-010.

2 Attach the handle assemblies 48M-140 to the aft side wall assembly 48M-010.

3 Attach the security pins 48M-160 to the handle assemblies 48M-140.

SUB TASK 25-41-51-410-088-F01
D2549020301600 D2549020413800

6. Installation of the Side Wall (48M-1)

(a) Attach the fittings 48M-020, 48M-030 with the screws 48M-040, 48M-050 to the aft side wall assembly 48M-010.

(b) Assemble the post assembly 48M-270 as follows:

1 Attach the screws 48M-280.

(c) Attach the post assembly 48M-270 with the screws 48M-300, 48M-320, the washers 48M-250 and the caps 48M-310.

(d) Assemble the single door emergency unlocking device assembly 48M-370 as follows:

WARNING: **BE CAREFUL WHEN YOU USE MATERIAL NO. 08-007 SEALANT, HIGH TEMPERATURE. OBEY THE MATERIAL MANUFACTURER'S INSTRUCTIONS.**

1 Apply the Material No. 08-007 Sealant, High Temperature to the snap catch 48M-420 and to the pin 48M-410 and attach the emergency unlocking device pivot 48M-400, the snap catch 48M-420 and the pin 48M-410 to the emergency unlocking device housing 48M-380.

NOTE: **Adjust the snap catch 48M-420 a half turn before stop.**

WARNING: **BE CAREFUL WHEN YOU USE MATERIAL NO. 08-007 SEALANT, HIGH TEMPERATURE. OBEY THE MATERIAL MANUFACTURER'S INSTRUCTIONS.**

2 Apply the Material No. 08-007 Sealant, High Temperature to the bolt 48M-430 and attach the emergency unlocking device strike 48M-390 with the bolt 48M-430 to the emergency unlocking device housing 48M-380.

(e) Attach the single door emergency unlocking device assembly 48M-370 with the screws 48M-360 to the post assembly 48M-270.

(f) Attach the angle 48M-350 with the screws 48M-300 and the washers 48M-250 to the aft side wall assembly 48M-010.

(g) Attach the angles 48M-220 with the screws 48M-240 and the washers 48M-250 to the aft side wall assembly 48M-010.

(h) Attach the oxygen container assy 48M-230 with the screws 48M-240 and the washers 48M-250 to the angles 48M-220.

(i) Attach the ground cable in accordance with the Process and Material Specification PMS 01-04-58 to the oxygen container assy 48M-230.

(j) Attach the angle 48M-190 with the screws 48M-240 and the washers 48M-250 to the aft side wall assembly 48M-010.

(k) Attach the cover oxygen container assy 48M-180 with the screws 48M-200 and the nuts 48M-210 to the angle 48M-190.

(l) Attach the studs 48M-260 and the washers 48M-250 to the cover oxygen container assy 48M-180.

(m) Attach the screws 48M-340 to the aft side wall assembly 48M-010.

(n) Attach the toilet seat cover dispenser 48M-330 to the screws 48M-340.

(o) Install and assemble the handle assemblies 48M-140 as follows:

1 Attach the special screws 48M-150 and the special washers 48M-170 to the aft side wall assembly 48M-010.

2 Attach the handle assemblies 48M-140 to the aft side wall assembly 48M-010.

3 Attach the security pins 48M-160 to the handle assemblies 48M-140.

SUB TASK 25-41-51-410-088-G01
D2549020414000 D2549020414800

7. Installation of the Side Wall (48M-1)

(a) Attach the fittings 48M-020, 48M-030 with the screws 48M-040, 48M-050 to the aft side wall assembly 48M-010.

(b) Assemble the post assembly 48M-270 as follows:

1 Attach the screws 48M-280.

(c) Attach the post assembly 48M-270 with the screws 48M-300, 48M-320, the washers 48M-250 and the caps 48M-310.

(d) Assemble the single door emergency unlocking device assembly 48M-370 as follows:

WARNING: BE CAREFUL WHEN YOU USE MATERIAL NO. 08-007 SEALANT, HIGH TEMPERATURE. OBEY THE MATERIAL MANUFACTURER'S INSTRUCTIONS.

1 Apply the Material No. 08-007 Sealant, High Temperature to the snap catch 48M-420 and to the pin 48M-410 and attach the emergency unlocking device pivot 48M-400, the snap catch 48M-420 and the pin 48M-410 to the emergency unlocking device housing 48M-380.

NOTE: Adjust the snap catch 48M-420 a half turn before stop.

WARNING: BE CAREFUL WHEN YOU USE MATERIAL NO. 08-007 SEALANT, HIGH TEMPERATURE. OBEY THE MATERIAL MANUFACTURER'S INSTRUCTIONS.

2 Apply the Material No. 08-007 Sealant, High Temperature to the bolt 48M-430 and attach the emergency unlocking device strike 48M-390 with the bolt 48M-430 to the emergency unlocking device housing 48M-380.

(e) Attach the single door emergency unlocking device assembly 48M-370 with the screws 48M-360 to the post assembly 48M-270.

(f) Attach the angle 48M-350 with the screws 48M-300 and the washers 48M-250 to the aft side wall assembly 48M-010.

(g) Attach the angles 48M-220 with the screws 48M-240 and the washers 48M-250 to the aft side wall assembly 48M-010.

(h) Attach the oxygen container assy 48M-230 with the screws 48M-240 and the washers 48M-250 to the angles 48M-220.

(i) Attach the ground cable in accordance with the Process and Material Specification PMS 01-04-58 to the oxygen container assy 48M-230.

(j) Attach the angle 48M-190 with the screws 48M-240 and the washers 48M-250 to the aft side wall assembly 48M-010.

(k) Attach the cover oxygen container assy 48M-180 with the screws 48M-200 and the nuts 48M-210 to the angle 48M-190.

(l) Attach the studs 48M-260 and the washers 48M-250 to the cover oxygen container assy 48M-180.

(m) Install and assemble the handle assemblies 48M-140 as follows:

1 Attach the special screws 48M-150 and the special washers 48M-170 to the aft side wall assembly 48M-010.

2 Attach the handle assemblies 48M-140 to the aft side wall assembly 48M-010.

3 Attach the security pins 48M-160 to the handle assemblies 48M-140.

SUB TASK 25-41-51-410-088-H01
D2549020413600 D2549030702200 R225401136-008 R225401136-014

8. Installation of the Side Wall (48M-1)

(a) Attach the fittings 48M-020, 48M-030 with the screws 48M-040, 48M-050 to the aft side wall assembly 48M-010.

(b) Assemble the post assembly 48M-270 as follows:

1 Attach the screws 48M-280.

(c) Attach the post assembly 48M-270 with the screws 48M-300, 48M-320, the washers 48M-250 and the caps 48M-310.

(d) Assemble the single door emergency unlocking device assembly 48M-370 as follows:

WARNING: BE CAREFUL WHEN YOU USE MATERIAL NO. 08-007 SEALANT, HIGH TEMPERATURE. OBEY THE MATERIAL MANUFACTURER'S INSTRUCTIONS.

1 Apply the Material No. 08-007 Sealant, High Temperature to the snap catch 48M-420 and to the pin 48M-410 and attach the emergency unlocking device pivot 48M-400, the snap catch 48M-420 and the pin 48M-410 to the emergency unlocking device housing 48M-380.

NOTE: Adjust the snap catch 48M-420 a half turn before stop.

WARNING: BE CAREFUL WHEN YOU USE MATERIAL NO. 08-007 SEALANT, HIGH TEMPERATURE. OBEY THE MATERIAL MANUFACTURER'S INSTRUCTIONS.

2 Apply the Material No. 08-007 Sealant, High Temperature to the bolt 48M-430 and attach the emergency unlocking device strike 48M-390 with the bolt 48M-430 to the emergency unlocking device housing 48M-380.

(e) Attach the single door emergency unlocking device assembly 48M-370 with the screws 48M-360 to the post assembly 48M-270.

(f) Attach the angle 48M-350 with the screws 48M-300 and the washers 48M-250 to the aft side wall assembly 48M-010.

(g) Attach the angles 48M-220 with the screws 48M-240 and the washers 48M-250 to the aft side wall assembly 48M-010.

(h) Attach the oxygen container assy 48M-230 with the screws 48M-240, 48M-245 and the washers 48M-250 to the angles 48M-220.

(i) Attach the ground cable in accordance with the Process and Material Specification PMS 01-04-58 to the oxygen container assy 48M-230.

(j) Attach the angle 48M-190 with the screws 48M-240 and the washers 48M-250 to the aft side wall assembly 48M-010.

(k) Attach the cover oxygen container assy 48M-180 with the screws 48M-200 and the nuts 48M-210 to the angle 48M-190.

(l) Attach the studs 48M-260 and the washers 48M-250 to the cover oxygen container assy 48M-180.

(m) Install and assemble the handle assemblies 48M-140 as follows:

1 Attach the special screws 48M-150 and the special washers 48M-170 to the aft side wall assembly 48M-010.

2 Attach the handle assemblies 48M-140 to the aft side wall assembly 48M-010.

3 Attach the security pins 48M-160 to the handle assemblies 48M-140.

TASK 25-41-51-400-825-Q01

D2549010500000 D2549010500400 D2549010500600 D2549010500800 D2549010501200
D2549010501400 D2549010501600 D2549010501800 D2549010502000 D2549010502200
D2549010502400 D2549010502600 D2549010502800 D2549010503200 D2549010503400
D2549010503600 D2549010503800 D2549010504600 D2549010505000 D2549010505200
D2549010505400 D2549010505600 D2549010505800 D2549010506000 D2549010506200
D2549010506400 D2549010506800 D2549010507000 D2549010507200 D2549010507600
D2549010507800 D2549010508000 D2549010508200 D2549010508400 D2549010508600
D2549010508800 D2549010509200 D2549010509400 D2549010509600 D2549010509800
D2549010510000 D2549010510200 D2549010510400 D2549010510600 D2549010510800
D2549010511000 D2549010511400 D2549010511600 D2549010511800 D2549010512000
D2549010512200 D2549010512400 D2549010513000 D2549010513400 D2549010513600
D2549010513800 D2549010514000 D2549010514400 D2549010514600 D2549010514800
D2549010600000 D2549010600200 D2549010600400 D2549010600600 D2549010600800
D2549010601200 D2549010601400 D2549010601600 D2549010602000 D2549010602200
D2549010602400 D2549010602600 D2549010602800 D2549010603000 D2549010603200
D2549010603400 D2549010603600 D2549010603800 D2549010604200 D2549010604400
D2549010604600 D2549010604800 D2549010605000 D2549010605200 D2549010605600
D2549010605800 D2549010606000 D2549010606200 D2549010606400 D2549010606600
D2549010606800 D2549010607000 D2549010607200 D2549010607400 D2549010607600
D2549010607800 D2549010608200 D2549010608400 D2549010608600 D2549010608800
D2549010609000 D2549010609200 D2549010609400 D2549010609600 D2549010609800
D2549010610000 D2549010610200 D2549010610400 D2549010611600 D2549010611800
D2549010612000 D2549010614400 D2549020404800 D2549020405000 D2549020500000
D2549020500400 D2549020500600 D2549020500800 D2549020501000 D2549020501200
D2549020501400 D2549020501800 D2549020502000 D2549020502200 D2549020502400
D2549020502600 D2549020502800 D2549020503000 D2549020503200 D2549020503600
D2549020503800 D2549020504000 D2549020504200 D2549020504400 D2549020504600
D2549020504800 D2549020505000 D2549020505200 D2549020505600 D2549020506000
D2549020506200 D2549020506400 D2549020506600 D2549020506800 D2549020507000
D2549020507200 D2549020507400 D2549020507600 D2549020507800 D2549020508000
D2549020508200 D2549020508400 D2549020508600 D2549020508800 D2549020509000
D2549020509200 D2549020509600 D2549020509800 D2549020510000 D2549020510400
D2549020510600 D2549020510800 D2549020511000 D2549020511200 D2549020511600
D2549020511800 D2549020512000 D2549020512200 D2549020512400 D2549020512600
D2549020512800 D2549020513000 D2549020513400 D2549020513600 D2549020514000
D2549020514200 D2549020514400 D2549020514600 D2549020514800 D2549020600000
D2549020600200 D2549020600400 D2549020600800 D2549020601000 D2549020601400
D2549020601800 D2549020602000 D2549020602200 D2549020602400 D2549020602600
D2549020602800 D2549020603000 D2549020603400 D2549020603600 D2549020603800
D2549020604000 D2549020604200 D2549020604400 D2549020604600 D2549020604800
D2549020605000 D2549020605200 D2549020605400 D2549020605600 D2549020605800
D2549020606000 D2549020606400 D2549020606600 D2549020606800 D2549020607000
D2549020607200 D2549020607400 D2549020607600 D2549020607800 D2549020608200
D2549020608400 D2549020608600 D2549020609000 D2549020609200 D2549020609400
D2549020609600 D2549020609800 D2549020610000 D2549020610200 D2549020610400
D2549020610600 D2549020610800 D2549020611000 D2549020611200 D2549020611400

D2549020611600 D2549020611800 D2549020612000 D2549020612200 D2549020612400
D2549020612600 D2549020612800 D2549020613000 D2549020613200 D2549020613600
D2549020613800 D2549020614000 D2549020614400 D2549020614600 D2549020614800
D2549020700000 D2549020700200 D2549020700400 D2549020700600 D2549020700800
D2549020701000 D2549020701200 D2549020701400 D2549020701600 D2549020701800
D2549020702000 D2549020702200 D2549020702400 D2549020702600 D2549020702800
D2549020703200 D2549020703400 D2549020703600 D2549020703800 D2549020704000
D2549020704200 D2549020704400 D2549020704600 D2549020704800 D2549020705000
D2549020705200 D2549020705400 D2549020705600 D2549020705800 D2549020706000
D2549020706200 D2549020706600 D2549020706800 D2549020707000 D2549020707200
D2549020707400 D2549020707600 D2549020707800 D2549020708000 D2549020708200
D2549020708400 D2549020708600 D2549020708800 D2549020709000 D2549020709200
D2549020709400 D2549020709600 D2549020709800 D2549020710000 D2549020710200
D2549020710400 D2549020710600 D2549020710800 D2549020711000 D2549020711200
D2549020711400 D2549020711600 D2549020712000 D2549020712200 D2549020712400
D2549020712600 D2549020712800 D2549020713200 D2549020713400 D2549020713600
D2549020713800 D2549020714400 D2549020714600 D2549020800200 D2549020800400
D2549020800600 D2549020800800 D2549020801000 D2549020801200 D2549020801600
D2549020802000 D2549020802200 D2549020802800 D2549020803000 D2549020803200
D2549020803400 D2549020803600 D2549020803800 D2549020805000 D2549020805400
D2549020807400 D2549020808200 D2549020809400 D2549020809800 D2549020814200
D2549030400000 D2549030400200 D2549030400400 D2549030401200 D2549030402000
D2549030402200 D2549030402600 D2549030402800 D2549030403400 D2549030403800
D2549030404000 D2549030404600 D2549030405200 D2549030405400 D2549030407200
D2549030500400 D2549030500600 D2549030500800 D2549030501000 D2549030501200
D2549030501400 D2549030501800 D2549030502000 D2549030502400 D2549030502600
D2549030502800 D2549030503000 D2549030503400 D2549030503600 D2549030503800
D2549030504000 D2549030504200 D2549030504600 D2549030504800 D2549030505200
D2549030505400 D2549030505600 D2549030505800 D2549030506000 D2549030506200
D2549030506400 D2549030506600 D2549030506800 D2549030507000 D2549030507200
D2549030507400 D2549030507600 D2549030507800 D2549030508000 D2549030508200
D2549030508400 D2549030508600 D2549030508800 D2549030509200 D2549030509400
D2549030509600 D2549030509800 D2549030510000 D2549030510200 D2549030510400
D2549030510600 D2549030510800 D2549030511000 D2549030511200 D2549030511400
D2549030511600 D2549030511800 D2549030512000 D2549030512200 D2549030512400
D2549030512800 D2549030513000 D2549030513200 D2549030513400 D2549030513600
D2549030513800 D2549030514000 D2549030514200 D2549030514400 D2549030514600
D2549030514800 D2549030600000 D2549030600200 D2549030600400 D2549030600600
D2549030600800 D2549030601000 D2549030601200 D2549030601400 D2549030601600
D2549030601800 D2549030602000 D2549030602200 D2549030602400 D2549030602600
D2549030602800 D2549030603000 D2549030603200 D2549030603400 D2549030603600
D2549030603800 D2549030604200 D2549030604400 D2549030604600 D2549030604800
D2549030605000 D2549030605200 D2549030605400 D2549030605600 D2549030605800
D2549030606200 D2549030606400 D2549030606600 D2549030606800 D2549030607000
D2549030607200 D2549030607400 D2549030607600 D2549030607800 D2549030608000
D2549030608200 D2549030608600 D2549030608800 D2549030609000 D2549030609200
D2549030609800 D2549030610000 D2549030610200 D2549030610400 D2549030610600

D2549030611000 D2549030611200 D2549030611400 D2549030611600 D2549030611800 D2549030612000 D2549030612200 D2549030612400 D2549030612600 D2549030612800 D2549030613200 D2549030613400 D2549030613600 D2549030613800 D2549030614200 D2549030614400 D2549030614600 D2549030614800 D2549030701200 R225401107-004 R225401115-000 R225401115-002 R225401128-000 R225401134-000 R225401134-002 R225401134-004 R225401134-006 R225401134-008 R225401134-010 R225401134-012 R225401134-016 R225401134-018 R225401134-020 R225401134-022 R225401134-024 R225401134-026 R225401134-028 R225401134-030 R225401134-032 R225401134-034 R225401134-036 R225401136-000 R225401136-010 R225401136-016 R225401136-020 R225401136-022 R225401137-000 R225401137-002 R225401137-004 R225401137-006 R225401137-008 R225401137-010 R225401137-012 R225401137-014 R225401137-016 R225401139-000 R225401142-000 R225401142-002 R225401145-000 R225401145-002 R225401145-004 R225401145-006 R225401145-008 R225401145-012 R225401145-014 R225401146-000 R225401146-002 R225401152-000 R225401152-002 R225401152-004 R225401152-006 R225401153-000 R225401159-000 R225401160-000 R225401160-002 R225401168-000 R225401168-002 R225401168-004 R225401168-006 R225401168-008 R225401168-010 R225401168-012 R225401168-014 R225401168-016 R225401168-018 R225401168-020 R225401168-022 R225401168-024 R225401168-026 R225401168-028 R225401172-000 R225401172-002 R225401172-004 R225401172-006 R225401172-008 R225401172-010 R225401172-012 R225401172-014 R225401172-016 R225401172-018 R225401175-000 R225401175-002 R225401176-000 R225401183-000 R225401183-002 R225401183-008 R225401188-000 R225401188-002 R225401188-004 R225401188-006 R225401192-000 R225401195-000 R225401196-000 R225401196-002 R225401196-004 R225401196-006 R225401196-034 R225401196-036 R225401196-038 R225401196-046 R225401196-048 R225401196-050 R225401196-052 R225401199-004 R225401199-006 R225401600-000 R225401600-002 R225401600-004 R225401603-000 R225401605-000 R225401605-002 R225401611-010 R225401613-000 R225401614-000 R225401618-000 R225401618-002 R225401619-000 R225401619-002 R225401625-000 R225401629-000 R225401629-002 R225401693-000

251. Installation of the Side Wall

A. General

This task gives you the installation and assembly procedures of the component.

B. Job Set-up Information
(1) Consumable Materials

REFERENCE	DESIGNATION
08-007	Sealant, High Temperature

Table 7044
Consumable Materials

C. Procedure

WARNING: BE CAREFUL WHEN YOU USE SOLVENTS/CLEANING AGENTS, SEALANTS AND OTHER MATERIALS. OBEY THE MATERIAL MANUFACTURER'S INSTRUCTIONS AND THE LOCAL REGULATIONS. MAKE SURE THAT THERE IS A GOOD FLOW OF AIR THROUGH THE WORK AREA. DO NOT BREATHE THE FUMES. DO NOT SMOKE. DO NOT USE THESE MATERIALS NEAR A FLAME, SPARKS OR SOURCES OF HEAT. USE PROTECTIVE CLOTHING, GOGGLES AND GLOVES. IF YOU GET ONE OF THESE MATERIALS ON YOUR SKIN OR IN YOUR EYES, FLUSH IT AWAY WITH A FLOW OF CLEAN WATER. IF YOU GET ONE OF THESE MATERIALS IN YOUR MOUTH, GET IMMEDIATE MEDICAL AID. IN GENERAL, THESE MATERIALS ARE POISONOUS, FLAMMABLE AND SKIN IRRITANTS.

WARNING: KEEP ALL HYDROCARBONS (FUELS, LUBRICANTS, ETC.) AWAY FROM ALL SOURCES OF OXYGEN. OXYGEN BECOMES EXPLOSIVE WHEN IT TOUCHES HYDROCARBONS.

WARNING: TO PREVENT CONTAMINATION OF THE OXYGEN SYSTEM, MAKE SURE THAT YOUR HANDS AND ALL THE TOOLS ARE CLEAN.

CAUTION: DO ALL THE WORK ON A CLEAN, SOFT SURFACE TO PREVENT DAMAGE TO THE COMPONENTS.

CAUTION: MAKE SURE THAT ALL THE PARTS ARE CLEAN BEFORE YOU ASSEMBLE THEM.

SUB TASK 25-41-51-410-089-A01
D2549030610200

1. Installation of the Side Wall (48N-1)

   (a) Attach the fittings 48N-020, 48N-030 with the screws 48N-040, 48N-050 to the aft side wall assembly 48N-010.

   (b) Assemble the post assembly 48N-270 as follows:

      1 Attach the plates 48N-285 with the screws 48N-280.

(c) Attach the post assembly 48N-270 with the screws 48N-300, 48N-320, the washers 48N-250 and the caps 48N-310.

(d) Attach the angle 48N-350 with the screws 48N-300 and the washers 48N-250 to the aft side wall assembly 48N-010.

(e) Attach the angles 48N-220 with the screws 48N-240 and the washers 48N-250 to the aft side wall assembly 48N-010.

(f) Attach the oxygen container assy 48N-230 with the screws 48N-240 and the washers 48N-250 to the angles 48N-220.

(g) Attach the ground cable in accordance with the Process and Material Specification PMS 01-04-58 to the oxygen container assy 48N-230.

(h) Attach the angle 48N-190 with the screws 48N-240 and the washers 48N-250 to the aft side wall assembly 48N-010.

(i) Attach the cover oxygen container assy 48N-180 with the screws 48N-200 and the nuts 48N-210 to the angle 48N-190.

(j) Attach the studs 48N-260 to the oxygen container assy 48N-180.

(k) Attach the screws 48N-340 to the aft side wall assembly 48N-010.

(l) Attach the toilet seat cover dispenser 48N-330 to the screws 48N-340.

(m) Install and assemble the handle assemblies 48N-140 as follows:

1 Attach the special screws 48N-150 and the special washers 48N-170 to the aft side wall assembly 48N-010.

2 Attach the handle assemblies 48N-140 to the aft side wall assembly 48N-010.

3 Attach the security pins 48N-160 to the handle assemblies 48N-140.

(n) Attach the section 48N-360 with the screws 48N-200 to the aft side wall assembly 48N-010.

(o) Attach the screws 48N-400 and the washers 48N-410 to the mirror assembly 48N-370.

(p) Attach the screws 48N-340 to the aft side wall assembly 48N-010.

(q) Attach the mirror assembly 48N-370 to the screws 48N-340.

(r) Attach the stud 48N-440 to the aft side wall assembly 48N-010.

SUB TASK 25-41-51-410-089-B01
D2549030701200

2. Installation of the Side Wall (48N-1)

(a) Attach the fittings 48N-020, 48N-030 with the screws 48N-040, 48N-050 to the aft side wall assembly 48N-010.

(b) Assemble the post assembly 48N-270 as follows:

1 Attach the plates 48N-285 with the screws 48N-280.

(c) Attach the post assembly 48N-270 with the screws 48N-300, 48N-320, the washers 48N-250 and the caps 48N-310.

(d) Assemble the single door emergency unlocking device assembly 48N-450 as follows:

WARNING: BE CAREFUL WHEN YOU USE MATERIAL NO. 08-007 SEALANT, HIGH TEMPERATURE. OBEY THE MATERIAL MANUFACTURER'S INSTRUCTIONS.

1 Apply the Material No. 08-007 Sealant, High Temperature to the snap catch 48N-500 and to the pin 48N-490 and attach the emergency unlocking device pivot 48N-480, the snap catch 48N-500 and the pin 48N-490 to the emergency unlocking device housing 48N-460.

NOTE: Adjust the snap catch 48N-500 a half turn before stop.

WARNING: BE CAREFUL WHEN YOU USE MATERIAL NO. 08-007 SEALANT, HIGH TEMPERATURE. OBEY THE MATERIAL MANUFACTURER'S INSTRUCTIONS.

2 Apply the Material No. 08-007 Sealant, High Temperature to the bolt 48N-510 and attach the emergency unlocking device strike 48N-470 with the bolt 48N-510 to the emergency unlocking device housing 48N-460.

(e) Attach the single door emergency unlocking device assembly 48N-450 with the screws 48N-520 to the post assembly 48N-270.

(f) Attach the angle 48N-350 with the screws 48N-300 and the washers 48N-250 to the aft side wall assembly 48N-010.

(g) Attach the angles 48N-220 with the screws 48N-240 and the washers 48N-250 to the aft side wall assembly 48N-010.

(h) Attach the oxygen container assy 48N-230 with the screws 48N-240 and the washers 48N-250 to the angles 48N-220.

(i) Attach the ground cable in accordance with the Process and Material Specification PMS 01-04-58 to the oxygen container assy 48N-230.

(j) Attach the angle 48N-190 with the screws 48N-240 and the washers 48N-250 to the aft side wall assembly 48N-010.

(k) Attach the cover oxygen container assy 48N-180 with the screws 48N-200 and the nuts 48N-210 to the angle 48N-190.

(l) Attach the studs 48N-260 to the oxygen container assy 48N-180.

(m) Attach the screws 48N-340 to the aft side wall assembly 48N-010.

(n) Attach the toilet seat cover dispenser 48N-330 to the screws 48N-340.

(o) Install and assemble the handle assemblies 48N-140 as follows:

1 Attach the special screws 48N-150 and the special washers 48N-170 to the aft side wall assembly 48N-010.

2 Attach the handle assemblies 48N-140 to the aft side wall assembly 48N-010.

3 Attach the security pins 48N-160 to the handle assemblies 48N-140.

(p) Attach the section 48N-360 with the screws 48N-200 to the aft side wall assembly 48N-010.

(q) Attach the screws 48N-400 and the washers 48N-410 to the mirror assembly 48N-370.

(r) Attach the screws 48N-340 to the aft side wall assembly 48N-010.

(s) Attach the mirror assembly 48N-370 to the screws 48N-340.

(t) Attach the stud 48N-440 to the aft side wall assembly 48N-010.

SUB TASK 25-41-51-410-089-C01

D2549010500000 D2549010500400 D2549010500600 D2549010500800
D2549010501200 D2549010501400 D2549010501600 D2549010501800

D2549010502000 D2549010502200 D2549010502400 D2549010502600
D2549010502800 D2549010503200 D2549010503400 D2549010503600
D2549010503800 D2549010504600 D2549010505000 D2549010505200
D2549010505400 D2549010505600 D2549010505800 D2549010506000
D2549010506200 D2549010506400 D2549010506800 D2549010507000
D2549010507200 D2549010507600 D2549010507800 D2549010508000
D2549010508200 D2549010508400 D2549010508600 D2549010508800
D2549010509200 D2549010509400 D2549010509600 D2549010509800
D2549010510000 D2549010510200 D2549010510400 D2549010510600
D2549010510800 D2549010511000 D2549010511400 D2549010511600
D2549010511800 D2549010512000 D2549010512200 D2549010512400
D2549010513000 D2549010513400 D2549010513600 D2549010513800
D2549010514000 D2549010514400 D2549010514600 D2549010514800
D2549010600000 D2549010600200 D2549010600400 D2549010600600
D2549010600800 D2549010601200 D2549010601400 D2549010601600
D2549010602000 D2549010602200 D2549010602400 D2549010602600
D2549010602800 D2549010603000 D2549010603200 D2549010603400
D2549010603600 D2549010603800 D2549010604200 D2549010604400
D2549010604600 D2549010604800 D2549010605000 D2549010605200
D2549010605600 D2549010605800 D2549010606000 D2549010606200
D2549010606400 D2549010606600 D2549010606800 D2549010607000
D2549010607200 D2549010607400 D2549010607600 D2549010607800
D2549010608200 D2549010608400 D2549010608600 D2549010608800
D2549010609000 D2549010609200 D2549010609400 D2549010609600
D2549010609800 D2549010610000 D2549010610200 D2549010610400
D2549010611600 D2549010611800 D2549010612000 D2549010614400
D2549020404800 D2549020405000 D2549020500000 D2549020500400
D2549020500600 D2549020500800 D2549020501000 D2549020501200
D2549020501400 D2549020501800 D2549020502000 D2549020502200
D2549020502400 D2549020502600 D2549020502800 D2549020503000
D2549020503200 D2549020503600 D2549020503800 D2549020504000
D2549020504200 D2549020504400 D2549020504600 D2549020504800
D2549020505000 D2549020505200 D2549020505600 D2549020506000
D2549020506200 D2549020506400 D2549020506600 D2549020506800
D2549020507000 D2549020507200 D2549020507400 D2549020507600
D2549020507800 D2549020508000 D2549020508200 D2549020508400
D2549020508600 D2549020508800 D2549020509000 D2549020509200
D2549020509600 D2549020509800 D2549020510000 D2549020510400
D2549020510600 D2549020510800 D2549020511000 D2549020511200
D2549020511600 D2549020511800 D2549020512000 D2549020512200
D2549020512400 D2549020512600 D2549020512800 D2549020513000
D2549020513400 D2549020513600 D2549020514000 D2549020514200
D2549020514400 D2549020514600 D2549020514800 D2549020600000
D2549020600200 D2549020600400 D2549020600800 D2549020601000
D2549020601400 D2549020601800 D2549020602000 D2549020602200
D2549020602400 D2549020602600 D2549020602800 D2549020603000
D2549020603400 D2549020603600 D2549020603800 D2549020604000

D2549020604200 D2549020604400 D2549020604600 D2549020604800
D2549020605000 D2549020605200 D2549020605400 D2549020605600
D2549020605800 D2549020606000 D2549020606400 D2549020606600
D2549020606800 D2549020607000 D2549020607200 D2549020607400
D2549020607600 D2549020607800 D2549020608200 D2549020608400
D2549020608600 D2549020609000 D2549020609200 D2549020609400
D2549020609600 D2549020609800 D2549020610000 D2549020610200
D2549020610400 D2549020610600 D2549020610800 D2549020611000
D2549020611200 D2549020611400 D2549020611600 D2549020611800
D2549020612000 D2549020612200 D2549020612400 D2549020612600
D2549020612800 D2549020613000 D2549020613200 D2549020613600
D2549020613800 D2549020614000 D2549020614400 D2549020614600
D2549020614800 D2549020700000 D2549020700200 D2549020700400
D2549020700600 D2549020700800 D2549020701000 D2549020701200
D2549020701400 D2549020701600 D2549020701800 D2549020702000
D2549020702200 D2549020702400 D2549020702600 D2549020702800
D2549020703200 D2549020703400 D2549020703600 D2549020703800
D2549020704000 D2549020704200 D2549020704400 D2549020704600
D2549020704800 D2549020705000 D2549020705200 D2549020705400
D2549020705600 D2549020705800 D2549020706000 D2549020706200
D2549020706600 D2549020706800 D2549020707000 D2549020707200
D2549020707400 D2549020707600 D2549020707800 D2549020708000
D2549020708200 D2549020708400 D2549020708600 D2549020708800
D2549020709000 D2549020709200 D2549020709400 D2549020709600
D2549020709800 D2549020710000 D2549020710200 D2549020710400
D2549020710600 D2549020710800 D2549020711000 D2549020711200
D2549020711400 D2549020711600 D2549020712000 D2549020712200
D2549020712400 D2549020712600 D2549020712800 D2549020713200
D2549020713400 D2549020713600 D2549020713800 D2549020714400
D2549020714600 D2549020800200 D2549020800400 D2549020800600
D2549020800800 D2549020801000 D2549020801200 D2549020801600
D2549020802000 D2549020802200 D2549020802800 D2549020803000
D2549020803200 D2549020803400 D2549020803600 D2549020803800
D2549020805000 D2549020805400 D2549020807400 D2549020808200
D2549020809400 D2549020809800 D2549020814200 D2549030400000
D2549030400200 D2549030400400 D2549030401200 D2549030402000
D2549030402200 D2549030402600 D2549030402800 D2549030403400
D2549030403800 D2549030404000 D2549030404600 D2549030405200
D2549030405400 D2549030407200 D2549030500400 D2549030500600
D2549030500800 D2549030501000 D2549030501200 D2549030501400
D2549030501800 D2549030502000 D2549030502400 D2549030502600
D2549030502800 D2549030503000 D2549030503400 D2549030503600
D2549030503800 D2549030504000 D2549030504200 D2549030504600
D2549030504800 D2549030505200 D2549030505400 D2549030505600
D2549030505800 D2549030506000 D2549030506200 D2549030506400
D2549030506600 D2549030506800 D2549030507000 D2549030507200
D2549030507400 D2549030507600 D2549030507800 D2549030508000

D2549030508200 D2549030508400 D2549030508600 D2549030508800
D2549030509200 D2549030509400 D2549030509600 D2549030509800
D2549030510000 D2549030510200 D2549030510400 D2549030510600
D2549030510800 D2549030511000 D2549030511200 D2549030511400
D2549030511600 D2549030511800 D2549030512000 D2549030512200
D2549030512400 D2549030512800 D2549030513000 D2549030513200
D2549030513400 D2549030513600 D2549030513800 D2549030514000
D2549030514200 D2549030514400 D2549030514600 D2549030514800
D2549030600000 D2549030600200 D2549030600400 D2549030600600
D2549030600800 D2549030601000 D2549030601200 D2549030601400
D2549030601600 D2549030601800 D2549030602000 D2549030602200
D2549030602400 D2549030602600 D2549030602800 D2549030603000
D2549030603200 D2549030603400 D2549030603600 D2549030603800
D2549030604200 D2549030604400 D2549030604600 D2549030604800
D2549030605000 D2549030605200 D2549030605400 D2549030605600
D2549030605800 D2549030606200 D2549030606400 D2549030606600
D2549030606800 D2549030607000 D2549030607200 D2549030607400
D2549030607600 D2549030607800 D2549030608000 D2549030608200
D2549030608600 D2549030608800 D2549030609000 D2549030609200
D2549030609800 D2549030610000 D2549030610400 D2549030610600
D2549030611000 D2549030611200 D2549030611400 D2549030611600
D2549030611800 D2549030612000 D2549030612200 D2549030612400
D2549030612600 D2549030612800 D2549030613200 D2549030613400
D2549030613600 D2549030613800 D2549030614200 D2549030614400
D2549030614600 D2549030614800 R225401107-004 R225401115-000 R225401115-
002 R225401128-000 R225401134-000 R225401134-002 R225401134-004 R225401134-
006 R225401134-008 R225401134-010 R225401134-012 R225401134-016 R225401134-
018 R225401134-020 R225401134-022 R225401134-024 R225401134-026 R225401134-
028 R225401134-030 R225401134-032 R225401134-034 R225401134-036 R225401136-
000 R225401136-010 R225401136-016 R225401136-020 R225401136-022 R225401137-
000 R225401137-002 R225401137-004 R225401137-006 R225401137-008 R225401137-
010 R225401137-012 R225401137-014 R225401137-016 R225401139-000 R225401142-
000 R225401142-002 R225401145-000 R225401145-002 R225401145-004 R225401145-
006 R225401145-008 R225401145-012 R225401145-014 R225401146-000 R225401146-
002 R225401152-000 R225401152-002 R225401152-004 R225401152-006 R225401153-
000 R225401159-000 R225401160-000 R225401160-002 R225401168-000 R225401168-
002 R225401168-004 R225401168-006 R225401168-008 R225401168-010 R225401168-
012 R225401168-014 R225401168-016 R225401168-018 R225401168-020 R225401168-
022 R225401168-024 R225401168-026 R225401168-028 R225401172-000 R225401172-
002 R225401172-004 R225401172-006 R225401172-008 R225401172-010 R225401172-
012 R225401172-014 R225401172-016 R225401172-018 R225401175-000 R225401175-
002 R225401176-000 R225401183-000 R225401183-002 R225401183-008 R225401188-
000 R225401188-002 R225401188-004 R225401188-006 R225401192-000 R225401195-
000 R225401196-000 R225401196-002 R225401196-004 R225401196-006 R225401196-
034 R225401196-036 R225401196-038 R225401196-046 R225401196-048 R225401196-
050 R225401196-052 R225401199-004 R225401199-006 R225401600-000
R225401600-002 R225401600-004 R225401603-000 R225401605-000 R225401605-

002 R225401611-010 R225401613-000 R225401614-000 R225401618-000 R225401618-002 R225401619-000 R225401619-002 R225401625-000 R225401629-000 R225401629-002 R225401693-000

3. Installation of the Side Wall

(a) Not applicable.

THIS PAGE IS INTENTIONALLY LEFT BLANK

STORAGE (INCLUDING TRANSPORTATION)

TASK 25-41-51-500-801-A00

1. Storage Instructions

A. Reason for Job

(1) This section provides instructions for storage and transportation of the lavatory.

B. Job Set-Up Information

(1) Consumables for Storage

REFER-ENCE	NAME	SOURCE
-	Wooden pallet	Local purchase
-	Sealed air cushioning material (Bubble Wrap)	Local purchase V2N822
-	Corrugated cardboard	Local purchase
-	Masking tape	Local purchase
-	Wooden box	Local purchase
-	Identification labels	Local purchase

Table 15001
Consumable Material List

NOTE: Refer to Vendor List for vendor addresses.

NOTE: Equivalent alternatives can be used for listed consumables.

C. Job Set-Up

(1) Preservation

(a) Not applicable.

D. Procedure

SUB TASK 25-41-51-530-001-A01

1. Packing

CAUTION: Attach all loose items with masking tape to prevent damage during transportation.

CAUTION: Use only the approved consumable materials for the protection of the lavatory.

CAUTION: The lavatory is not approved for installation if there is no identification label attached.

(a) Attach an identification label to the lavatory and make sure,

1 The identification label has all the related information for the lavatory.

2 The identification label can be easily read.

3 Use sealed air cushioning material (Bubble Wrap) or corrugated cardboard and masking tape to prevent damage to the lavatory.

4 Attach an identification label to the outside of the wooden box and make sure:

- that the identification label has all the related information for the lavatory.

- that the identification label can be easily read.

SUB TASK 25-41-51-550-001-A01

2. Storage

CAUTION: DO NOT KEEP THE LAVATORY NEAR FLUIDS THAT CAN CAUSE CORROSION OR DAMAGE.

CAUTION: DO NOT KEEP THE LAVATORY NEAR SOURCES OF HEAT OR OZONE.

(a) Keep the lavatory in a clean, dry storage facility with a good supply of air.

NOTE: Temperature and humidity limits are not applicable. The lavatory can be kept outside in a dry area.

NOTE: The use of desiccant is not necessary.

(b) Put the lavatory in a position where the identification label can be clearly read.

SUB TASK 25-41-51-510-001-A01

3. Transportation

(a) The correctly packed and labelled lavatory must be transported in an upright position.

E. Close-Up

(1) Not applicable.

THIS PAGE IS INTENTIONALLY LEFT BLANK

ILLUSTRATED PARTS LIST

THIS PAGE IS INTENTIONALLY LEFT BLANK

TASK 25-41-51-871-802-A01

1. IPL Introduction

A. General

(1) This ILLUSTRATED PARTS LIST (IPL) contains all replaceable parts of the lavatory.

TASK 25-41-51-871-803-A01

2. Organization

A. Material Arrangement

- The IPL has the following sections:

(1) Introduction

- The introduction gives the basic data that is necessary to use the IPL.
- The introduction contains a list of vendors (LOV).

(2) Numerical Index

- This section lists part numbers in alphanumerical sequence with reference to the figure and item numbers and units per assy.
- The structure of the part numbers is as follows (from the left side to the right side):

- A through Z (without "O" as zero)

- 0 to 9.

For subsequent rows, the order is:

- a dash

- A through Z (without "O" as zero)

- 0 to 9.

(3) Detailed Parts List

(a) Column “FIG. / ITEM“

- The first number in the first line of a page shows the number of the figure that shows the part. The second number shows the item number by which the part is identified on the illustration. A dash in front of the item number shows that the part is not illustrated.

(b) Column “PART NUMBER“

- The part number column has the original manufacturer’s part numbers. When standard part numbers are used, the standard part number is listed in this column.

(c) Column “AIRLINE STOCK NO.“

- The column airline stock number is blank for airline internal use.

(d) Column “INDENTURE“

- The indenture system used in the parts list shows the relationship of one part to another. For a given item, the number of indentures depicts the relationship of the item to the associated next higher assy as follows:
- 1 2 3
- assy
- · Detail Parts for assy
- · Sub-assy
- · Attaching Parts for Sub-assy
- · · Detail Parts for Sub-assy
- · · Sub-sub-assy
- · · Attaching Parts for Sub-sub-assy
- · · · Detail Parts for Sub-sub-assy

Attaching part quantities are given for one assy only.

(e) Column “NOMENCLATURE“

1Attaching Parts

Attaching parts are written ATTACHING PARTS and are listed immediately after the parts which they attach. The *** symbol follows the last item of the attaching parts group.

(f) Column “EFFECT CODE“

1 The effectivity code links the part to the highest assy on the same figure. If there are twenty-four item numbers for the highest assy e.g. 1A through 1Z, a possible code could be “ACE" indicating that the part is used on 1A, 1C and 1E, but not on 1B, 1D or 1F. If there is more than one main assy, with different item numbers, the item number must precede the letter e.g. 1ACE. If the part is used on all assemblies the column is left blank.

2 The effectivities code identifies affected parts within a single figure only. The same code can be applied to other figures, but it is only to be used for those parts within the figure which it is listed. The effectivity code does not relate to other figures.

3Codes A-Z (except I and O) are assigned to existing item numbers when necessary to show:

a Added items.

b Service Bulletin modifications.

c Configuration differences.

d Optional parts.

e Product improvement parts (no service bulletin).

4Coded item numbers are not shown on the exploded view when the appearance and location of the coded item is the same as the original item.

(g) Column “UPA“

- The column units per assy contains the quantity of a part required in the sequence of only one next higher assy. For items with variable quantities, the letters "AR" are put in the quantity column to show "As Required". When items are recorded for reference function, they are identified with “RF“.

TASK 25-41-51-871-804-A01

3. Interchangeability Terms and Abbreviations

A. Parts Replacement Data

- The interchangeability relationship between parts is identified in the NOMENCLATURE column of the parts list. A list of the terms used to show interchangeability and their definition is as follows:

TERM	PARTS LIST ABBREVIATION	DEFINITION
Optional	OPT	This part is optional to and interchangeable with other parts in the same item number variant group or other item number if designated.
Superseded by	SUPSD BY	The part in the part number column is replaced by and is not interchangeable with the item number shown in the notation.
Supersedes	SUPSDS	The part in the part number column replaces and is not interchangeable with the item number shown in the notation.
Replaced by	RPLD BY	The part in the part number column is replaced by and interchangeable with the item number shown in the notation.
Replaces	RPLS	The part in the part number column replaces and is interchangeable with the item number shown in the notation.

Table 10001
Interchangeability Definitions

TASK 25-41-51-879-808-A01

4. How to use the IPL

A. If the part number is known:

(1) Find the part number in the numerical index. Note down figure and item number.

(2) Go to the figure.

(3) Use the item number to find the part in the illustration or in the Parts List.

B. If the part number is unknown:

(1) Refer to Figure 1 and find the figure item number of the part.

(2) Record the figure item number.

(3) Turn to the figure parts list and find the related part number.

TASK 25-41-51-879-809-A01

5. List of Vendors

A. For vendor names and addresses refer to the Business Identification Cross-reference System (BINCS) search engine on: https://cage.dla.mil/search/begin_search.aspx .

NOTE: The data contained in BINCS is US government owned information, and as such can not be reused or marketed for commercial use. Searches are for free, but DLA Logistics Information Services reserves the right to limit access if unreasonable use of the system is made.

Standard parts (AN and MS) are not identified by a vendor code.All vendors supplying items not carried under the prime manufacturer's part number (see cover page) are shown with his manufacturer code. Vendor manufacturer codes shall be preceded by capital letter "V".

ALPHA/NUMERIC INDEX

PART NUMBER	AIRLINE STOCK NUMBER	FIG NUMBER	ITEM NUMBER	TOTAL REQ'D
0-112-0013-2000		16A	070A	AR
		16B	070A	AR
		16C	060A	AR
		16D	060A	AR
		16E	070A	AR
		16F	040A	AR
		16	070A	AR
0-112-0015-2000		07A	030A	AR
		07B	030A	AR
		07C	030A	AR
		07D	030A	AR
		07E	030A	AR
		07F	030A	AR
		07G	030A	AR
		07J	030A	AR
		07K	030A	AR
		07L	030A	AR
		07N	030A	AR
		07P	030A	AR
		07Q	030A	AR
		07R	030A	AR
		07S	030A	AR
		07T	030A	AR
		07U	030A	AR
		07V	030A	AR
		07W	030A	AR
		07X	030A	AR
		07Y	030A	AR
		07Z	030A	AR
		49A	030A	002
		49B	030A	AR
		49C	030A	002
		49	030A	002
		7	030A	AR

- ITEM NOT ILLUSTRATED

ALPHA/NUMERIC INDEX

PART NUMBER	AIRLINE STOCK NUMBER	FIG NUMBER	ITEM NUMBER	TOTAL REQ'D
0-112-0016-2000		07A	020A	AR
		07B	020A	AR
		07C	020A	AR
		07D	020A	AR
		07E	020A	AR
		07F	020A	AR
		07G	020A	AR
		07J	020A	AR
		07K	020A	AR
		07L	020A	AR
		07M	020A	AR
		07N	020A	AR
		07P	020A	AR
		07Q	020A	AR
		07R	020A	AR
		07S	020A	AR
		07T	020A	AR
		07U	020A	AR
		07V	020A	AR
		07W	020A	AR
		07X	020A	AR
		07Y	020A	AR
		07Z	020A	AR
		18	080A	AR
		49A	020A	002
		49B	020A	AR
		49C	020A	002
		49	020A	002
		7	020A	AR
0-112-002400000		26V	120A	AR
0-123-000700000		05E	150A	004
		06Q	390A	004
		06U	360A	004
		06Y	400A	004
		10A	060A	014

- ITEM NOT ILLUSTRATED

ALPHA/NUMERIC INDEX

PART NUMBER	AIRLINE STOCK NUMBER	FIG NUMBER	ITEM NUMBER	TOTAL REQ'D
		10	060A	014
		11A	030A	015
		11B	040A	015
		11C	040A	015
		11D	040A	015
		11E	040A	015
		11F	040A	015
		11G	040A	015
		11H	040A	015
		11J	040A	015
		11K	040A	015
		11L	040A	015
		11M	040A	015
		11N	040A	015
		11P	040A	015
		11Q	040A	015
		11R	150A	015
		11	030A	015
		13B	130A	008
		13G	130A	007
		13H	110A	007
		13J	110A	AR
		13K	110A	008
		13L	110A	008
		13M	110A	008
		13N	200A	006
		13P	220A	006
		13Q	220A	006
		13R	200A	006
		13S	220A	006
		13T	240A	008
		13U	330A	008
		13V	120A	008
		13W	050A	010
		13	120A	008

- ITEM NOT ILLUSTRATED

ALPHA/NUMERIC INDEX

PART NUMBER	AIRLINE STOCK NUMBER	FIG NUMBER	ITEM NUMBER	TOTAL REQ'D
		14A	080A	002
		14B	080A	002
		14	080A	002
		15B	140A	008
		15T	400A	002
		15U	400A	002
		20C	090A	002
		22D	190A	002
		22E	190A	002
		22F	210A	002
		22G	170A	002
		22H	210A	002
		22K	300A	002
0-182-005301000		9	090A	002
0-182-005700000		05A	200A	001
		05D	210A	001
		05F	220A	001
0083636		15A	150A	004
		15D	070A	004
		15S	070A	004
		15	140A	004
012543000		06J	-045A	002
		06L	-045A	002
0234912		15A	140A	002
		15D	060A	002
		15S	060A	002
		15	130A	002
0234913		15A	160A	004
		15D	080A	004
		15S	080A	002
		15	150A	004
0242976		15A	130A	001
		15D	050A	001
		15S	050A	001
		15	120A	001

- ITEM NOT ILLUSTRATED

ALPHA/NUMERIC INDEX

PART NUMBER	AIRLINE STOCK NUMBER	FIG NUMBER	ITEM NUMBER	TOTAL REQ'D
0333163		15A	120A	001
		15D	040A	001
		15S	040A	001
		15	110A	001
09321747008		13A	083A	004
1-11265-00-00		15P	310A	001
1-12173-00-01		15P	330A	001
10-1358-1		26A	100A	001
		26B	100A	001
		26C	100A	001
		26D	100A	001
		26E	100A	001
		26F	100A	001
		26G	100A	001
		26J	100A	001
		26K	100A	001
		26P	-100B	001
		26R	-100B	001
		26	100A	001
1001278		05C	-110C	001
		05G	-120C	001
		05H	-120B	001
1001281		05C	-110B	001
		05G	-120B	001
1001289		05C	-100C	001
		05G	-110C	001
		05H	-110B	001
1001291		05C	-100B	001
		05G	-110B	001
115341		13B	-060C	AR
		13	-060D	001
120801		07N	260A	001
		07V	175A	001
		07Z	175A	001
		49A	175A	001

- ITEM NOT ILLUSTRATED

ALPHA/NUMERIC INDEX

PART NUMBER	AIRLINE STOCK NUMBER	FIG NUMBER	ITEM NUMBER	TOTAL REQ'D
1240-101		15T	330A	001
		15U	330A	001
1240-111		15T	310A	001
		15U	310A	001
1240-52		07D	230A	001
		07E	210A	001
		07F	240A	001
		07Y	360A	001
		07Z	280A	001
		49A	300A	001
1240-77		07J	230A	001
		07U	270A	001
1245-02		15T	290A	001
		15U	290A	001
		49	300A	001
12543000		07U	-290A	004
1280-06		19A	-307A	004
		19B	-257A	004
		19C	-307A	004
		19D	-430A	004
		19	-257A	004
14320-002-1		12	110A	001
14320-002B1		12A	190A	001
		12H	-310B	001
		12	-110B	001
14320-002C1		12A	-190B	001
		12B	190A	001
		12C	-230B	001
		12D	-230B	001
		12	-110D	001
14330-004A1		12C	230A	001
		12D	230A	001
14330-004B1		12D	-230C	001
		12E	270A	001
		12F	270A	001

- ITEM NOT ILLUSTRATED

ALPHA/NUMERIC INDEX

PART NUMBER	AIRLINE STOCK NUMBER	FIG NUMBER	ITEM NUMBER	TOTAL REQ'D
		12G	280A	001
		12H	310A	001
		12J	300A	001
14330-008-1		12D	-230D	001
		12E	-270B	001
155-11114-1A		06Q	-330B	001
		06U	-290D	001
		06Y	-370B	001
1608011		19E	130A	002
		19F	130A	002
		19H	130A	002
		19J	190A	002
		19K	190A	002
170324-2		27A	120A	008
		27B	120A	008
		27C	120A	008
		27D	140A	008
		27E	120A	008
		27	120A	008
172234-1		27D	-640A	001
1A113-0139-1		11A	110A	002
		11B	130A	002
		11C	130A	002
		11D	120A	002
		11E	120A	002
		11F	120A	002
		11G	120A	002
		11H	120A	002
		11J	120A	002
		11K	120A	002
		11L	120A	001
		11M	120A	002
		11N	120A	002
		11P	120A	002
		11Q	120A	002

- ITEM NOT ILLUSTRATED

ALPHA/NUMERIC INDEX

PART NUMBER	AIRLINE STOCK NUMBER	FIG NUMBER	ITEM NUMBER	TOTAL REQ'D
		11	110A	002
1A113-0139-101		11A	-113A	001
		11B	-133A	001
		11C	-133A	001
		11D	-123A	001
		11E	-123A	001
		11F	-123A	001
		11G	-123A	001
		11H	-123A	001
		11J	-123A	001
		11K	-123A	001
		11L	-130A	001
		11M	-130A	001
		11N	-130A	001
		11P	-130A	001
		11Q	-130A	001
		11	-113A	001
1A113-0139-103		11A	-115A	001
		11B	-135A	001
		11C	-135A	001
		11D	-125A	001
		11E	-125A	001
		11F	-125A	001
		11G	-125A	001
		11H	-125A	001
		11J	-125A	001
		11K	-125A	001
		11L	-140A	001
		11M	-140A	001
		11N	-140A	001
		11P	-140A	001
		11Q	-140A	001
		11	-115A	001
1J512-01800-000		14C	060A	001
1X516-03000-000		14C	070A	002

- ITEM NOT ILLUSTRATED

ALPHA/NUMERIC INDEX

PART NUMBER	AIRLINE STOCK NUMBER	FIG NUMBER	ITEM NUMBER	TOTAL REQ'D
2000-24		21	030A	001
210-071C		18	260A	001
22C150150020004		48M	-230B	001
22C150150030003		06J	-210E	001
		06L	-210B	001
22C150150030004		06H	-200E	001
		06M	-210C	001
		06T	-210C	001
		06U	-210C	001
22C150150080001		06B	-170B	001
		6	-155F	001
22C150150080003		06F	-200E	001
		06G	-200C	001
22C150150080004		06N	-210C	001
22C150150090004		06M	-210E	001
		06N	-210E	001
		06P	-210C	001
		06W	230A	001
		48	-170B	001
22C150150170001		06C	-200F	001
		6	-155D	001
22C150150170003		06F	-200G	001
22C150150320001		06A	-170C	001
		06B	-170C	001
		06C	-200B	001
		06D	-200C	001
		06E	200A	001
		06F	-200H	001
		48E	-230G	001
22C150150320003		06B	-170E	001
		06D	-200E	001
		06G	200A	001
		06H	-200C	001
		06J	-210C	001
		06K	-210B	001

- ITEM NOT ILLUSTRATED

ALPHA/NUMERIC INDEX

PART NUMBER	AIRLINE STOCK NUMBER	FIG NUMBER	ITEM NUMBER	TOTAL REQ'D
		06L	-210C	001
		06M	-210B	001
		48E	-230D	001
22C150150320004		06N	-210B	001
		06P	210A	001
		06Q	210A	001
		06R	210A	001
		06T	210A	001
		06U	-210F	001
		06V	210A	001
		06W	-230D	001
		06X	-210C	001
		06Y	-170B	001
		06Z	-170B	001
		48A	-210B	001
		48B	220A	001
		48C	230A	001
		48D	-170C	001
		48E	-230E	001
		48G	230A	001
		48H	-230B	001
		48J	190A	001
		48K	230A	001
		48L	230A	001
		48M	230A	001
		48	-170D	001
22C150150460004		48D	-170E	001
		48N	230A	001
		48	-170E	001
22C15L150320100		06V	-210E	001
22C220150040004		06Q	-210D	001
		06Z	-170C	001
		48H	-230C	001
22C220150320003		06H	-200B	001
		06N	-210F	001

- ITEM NOT ILLUSTRATED

ALPHA/NUMERIC INDEX

PART NUMBER	AIRLINE STOCK NUMBER	FIG NUMBER	ITEM NUMBER	TOTAL REQ'D
22C220150320004		48B	-220D	001
		48K	-230C	001
		48L	-230E	001
22C22L150320009		06M	-210H	001
		06N	-210J	001
22G150150030400		06U	-210K	001
22G150150060400		06C	-200K	001
22G150150170400		06B	-170H	001
		48E	-230H	001
		6	-155J	001
22G150150320400		06J	-210J	001
		48A	-210H	001
		48J	-190G	001
22G150150320400		06A	-170E	001
		06B	-170J	001
		06D	-200G	001
		06E	-200E	001
		06G	-200E	001
		06H	-200G	001
		06K	-210H	001
		06M	-210G	001
		06N	-210H	001
		06P	-210G	001
		06Q	-210F	001
		06T	-210D	001
		06U	-210G	001
		06V	-210F	001
		06W	-230E	001
		06X	-210E	001
		06Y	-170G	001
		06Z	-170D	001
		48C	-230F	001
		48D	-170J	001
		48F	-230C	001
		48G	-230E	001

- ITEM NOT ILLUSTRATED

ALPHA/NUMERIC INDEX

PART NUMBER	AIRLINE STOCK NUMBER	FIG NUMBER	ITEM NUMBER	TOTAL REQ'D
		48H	-230E	001
		48K	-230E	001
		48L	-230F	001
		48	-170G	001
22G150150430400		06F	-200K	001
		06Q	-210G	001
22G150150460400		48D	-170H	001
22G150150460400		06H	-200F	001
		06K	-210J	001
		06P	-210H	001
		06U	-210H	001
		06Y	-170H	001
		48A	-210G	001
		48G	-230F	001
22G220150320400		06M	-210F	001
		06P	-210F	001
		06U	-210J	001
		06X	-210D	001
		48C	-230E	001
		48D	-170G	001
		48G	-230G	001
		48M	-230H	001
		48	-170F	001
22G220150400400		06N	-210G	001
		06V	-210G	001
		06Y	-170F	001
		06Z	-170E	001
22G220150460400		06P	-210J	001
		06X	-210F	001
		48D	-170K	001
		48	-170H	001
233433ZB0		15A	-090B	001
		15	080A	001
233434ZB0		15	-080C	001
233435ZB0		15	-080B	001

- ITEM NOT ILLUSTRATED

ALPHA/NUMERIC INDEX

PART NUMBER	AIRLINE STOCK NUMBER	FIG NUMBER	ITEM NUMBER	TOTAL REQ'D
2336000-9		06R	310A	001
		48B	370A	001
		48K	440A	001
		48M	490A	001
236119ZB0		15A	090A	001
244-20-004		14A	-030B	002
		14B	030A	002
244-20-102		02A	280A	002
		02B	270A	002
		02C	260A	002
		02D	280A	002
		14A	030A	002
		14C	030A	002
		14	030A	002
		19A	122A	001
			132A	001
		19B	122A	001
			132A	001
		19C	122A	001
			132A	001
		19D	120A	001
			180A	001
		19	122A	001
			132A	001
		2	280A	002
246-29-703		19J	100A	001
		19K	130A	001
24E507009G03		22A	110A	001
		22B	120A	001
		22C	050A	001
		22D	080A	001
		22E	080A	001
		22F	070A	001
		22G	060A	001
		22H	070A	001

- ITEM NOT ILLUSTRATED

ALPHA/NUMERIC INDEX

PART NUMBER	AIRLINE STOCK NUMBER	FIG NUMBER	ITEM NUMBER	TOTAL REQ'D
24E508198G01 2634DP437 2634DP437-110		22J	020A	001
		22K	020A	001
		22	110A	001
		22	-110B	001
		18	030A	003
		06A	230A	004
		06B	230A	005
		06C	260A	005
		06D	260A	004
		06E	260A	004
		06F	260A	005
		06G	260A	004
		06H	260A	004
		06J	290A	005
		06K	270A	005
		06L	290A	005
		06M	290A	005
		06N	290A	005
		06P	300A	005
		06Q	300A	006
		06R	290A	005
		06S	240A	004
		06T	290A	005
		06U	270A	005
		06V	290A	005
		06W	290A	005
		06X	290A	005
		06Y	250A	005
		06Z	250A	005
		48A	290A	005
		48B	300A	005
		48C	310A	005
		48D	250A	006
		48E	310A	004
		48F	310A	005

- ITEM NOT ILLUSTRATED

ALPHA/NUMERIC INDEX

PART NUMBER	AIRLINE STOCK NUMBER	FIG NUMBER	ITEM NUMBER	TOTAL REQ'D
		48G	310A	005
		48H	310A	005
		48J	270A	005
		48K	310A	005
		48L	310A	005
		48M	310A	005
		48	250A	005
		6	210A	004
2863		11A	120A	001
		11B	140A	001
		11C	140A	001
		11D	130A	001
		11E	130A	001
		11F	130A	001
		11G	135A	001
		11H	130A	001
		11J	135A	001
		11K	130A	001
		11L	150A	001
		11M	155A	001
		11N	155A	001
		11P	155A	001
		11Q	150A	001
		11	120A	001
2892-008-00-000		19D	370A	001
2892-009-00-000		19A	-260D	001
		19B	-210B	001
		19C	260A	001
2892-015-00-000		19A	-260C	001
2892-016-00-000		19A	-260B	001
		19B	210A	001
2966		21	-010B	001
2966-01		21A	010A	001
		21B	010A	001
		21	010A	001

- ITEM NOT ILLUSTRATED

ALPHA/NUMERIC INDEX

PART NUMBER	AIRLINE STOCK NUMBER	FIG NUMBER	ITEM NUMBER	TOTAL REQ'D
2980192100000		22A	010A	001
		22B	010A	001
		22	010A	001
2980292100000		22D	010A	001
		22E	010A	001
		22G	010A	001
2980332100000		22D	-010B	001
		22E	-010B	001
		22G	-010B	001
		22J	010A	001
		22	-010B	001
320559		27A	110A	005
		27B	110A	005
		27C	110A	005
		27	110A	003
3250-30		14A	100A	001
		14	100A	001
33723		48A	510A	002
		48G	480A	002
		48M	470A	002
33767		48A	500A	002
		48G	470A	002
		48M	460A	002
3416404		26Q	-490A	003
343-5005		19E	265A	002
		19	210A	002
3550012		06D	-350A	006
		06F	-380A	006
		06H	-420A	006
		06J	-470A	002
		06K	-370A	006
		6	-310A	006
356		26A	-137A	001
		26B	-160A	001
		26C	-160A	001

- ITEM NOT ILLUSTRATED

ALPHA/NUMERIC INDEX

PART NUMBER	AIRLINE STOCK NUMBER	FIG NUMBER	ITEM NUMBER	TOTAL REQ'D
		26D	-160A	001
		26E	-160A	001
		26F	-160A	001
		26G	-160A	001
		26J	-160A	001
		26K	-160A	001
		26	-137A	001
3670725-16		13	083A	004
401222		13D	-060H	001
		13K	-060J	001
401330		13P	-040B	001
401337		13Q	-040D	001
401365		13C	-060L	001
		13D	060A	001
		13H	-060G	001
		13J	-060L	001
		13K	-060G	001
		13N	020A	001
4020015		12J	215A	AR
			225A	AR
4056		26F	430A	001
		26G	430A	001
		26J	430A	001
		26K	430A	001
		26L	190A	001
		26M	430A	001
		26N	430A	001
		26P	430A	001
		26Q	360A	001
		26R	450A	001
		26S	360A	001
		26T	430A	001
		26U	360A	001
		26V	110A	001
4197-10-01		14A	-100B	001

- ITEM NOT ILLUSTRATED

ALPHA/NUMERIC INDEX

PART NUMBER	AIRLINE STOCK NUMBER	FIG NUMBER	ITEM NUMBER	TOTAL REQ'D
		14B	100A	001
4197-10-02		14A	-100C	001
4197-10-04		14B	-100B	001
422225020		13B	-060E	AR
		13F	060A	001
		13	060A	001
423210830		13B	065A	001
		13F	070A	001
4262-10		14A	120A	001
		14B	120A	001
440458		13C	-060J	001
440458SK		13D	-060J	001
440485		13C	-060K	001
440488		13C	-060E	001
		13D	-060K	001
440497		13L	-060D	001
440499		13E	-060E	001
440501		13E	-060G	001
		13G	-060E	001
		13L	-060E	001
		13M	060A	001
4421054-0D0		48A	450A	001
		48J	-480A	001
		48L	460A	001
		48M	510A	001
44A2F21-277		48M	-230F	001
44A2F21-285		48A	-210D	001
		48J	-190F	001
44A2F21-298		48L	-230C	001
469675600		13A	060A	001
473249801		13E	060A	001
		13	-060G	001
473649701		13A	-060E	001
		13B	-060F	AR
473649721		13H	-060F	001

- ITEM NOT ILLUSTRATED

ALPHA/NUMERIC INDEX

PART NUMBER	AIRLINE STOCK NUMBER	FIG NUMBER	ITEM NUMBER	TOTAL REQ'D
		13K	060A	001
		13N	-020D	001
		13S	-040F	001
473649800		13C	-060D	001
		13H	-060E	001
		13J	-060K	001
		13K	-060C	001
		13P	-040K	001
473675600		13B	-060G	AR
		13C	060A	001
		13G	-060B	001
		13L	-060B	001
		13V	-060C	AR
		13	-060E	001
473675610		13B	-060K	AR
		13V	-060B	AR
		13	-060F	001
473675615		13G	-060D	001
		13K	-060E	001
473675620		13C	-060F	001
		13D	-060G	001
		13H	060A	001
		13J	-060D	001
		13L	-060G	001
		13N	-020E	001
		13Q	-040E	001
		13S	-040G	001
473841700		13Q	-040M	001
473C6529		13G	060A	001
		13K	-060B	001
		13Q	040A	001
473C6756		13W	030A	001
477649000		13D	-060E	001
477675600		13S	-040C	001
477678300		13A	-060B	001

- ITEM NOT ILLUSTRATED

ALPHA/NUMERIC INDEX

PART NUMBER	AIRLINE STOCK NUMBER	FIG NUMBER	ITEM NUMBER	TOTAL REQ'D
		13D	-060C	001
		13N	-020G	001
		13V	-060F	AR
		13	-060J	001
477678900		13C	-060B	001
		13H	-060K	001
		13J	-060C	001
477679800		13A	-060F	001
		13B	-060D	AR
		13D	-060B	001
		13H	-060C	001
		13P	040A	001
477679900		13L	-060K	001
490679710		13E	-060B	001
4913211080		26A	140A	001
		26B	180A	001
		26C	180A	001
		26D	180A	001
		26E	180A	001
		26F	180A	001
		26G	180A	001
		26J	180A	001
		26K	180A	001
		26M	180A	001
		26N	180A	001
		26P	180A	001
		26R	220A	001
		26T	180A	001
		26U	-240B	001
		26V	090A	001
		26	140A	001
4913211082		26Q	240A	001
		26S	240A	001
		26U	240A	001
496036		13B	-060J	AR

- ITEM NOT ILLUSTRATED

ALPHA/NUMERIC INDEX

PART NUMBER	AIRLINE STOCK NUMBER	FIG NUMBER	ITEM NUMBER	TOTAL REQ'D
497648400		13S	-040D	001
497679800		13S	-040B	001
497H6770		13M	-060C	001
		13P	-040F	001
		13Q	-040K	001
4C255061-1		07G	220A	001
		07N	270A	001
		07W	280A	001
5000A		19A	280A	001
		19B	230A	001
		19C	280A	001
		19	230A	001
500845		48A	520A	002
		48G	490A	002
		48M	480A	002
5011-02-0001		13U	310A	001
		9	040A	002
5041-02-0029-12		13F	-210A	005
5041-02-0030-12		26A	190A	002
		26B	195A	002
		26	190A	002
530646		15	-100B	001
530647		15A	-110B	001
		15	100A	001
530654		15	-090D	001
530658		15A	100A	001
		15	090A	001
530659		15	-090B	001
530666		15A	110A	001
537002		15	-080D	001
537008		15D	-020B	001
		15S	-020B	001
		15	-090C	001
537146		15D	010A	001
		15S	010A	001

- ITEM NOT ILLUSTRATED

ALPHA/NUMERIC INDEX

PART NUMBER	AIRLINE STOCK NUMBER	FIG NUMBER	ITEM NUMBER	TOTAL REQ'D
537148		15D	-010B	001
		15S	-010B	001
537163		15D	020A	001
		15S	020A	001
537165		15D	030A	001
		15S	030A	001
537167		15D	-030B	001
		15S	-030B	001
5472R		11A	-090A	001
		11B	-100A	001
		11C	-100A	001
		11D	-100A	001
		11E	-100A	001
		11F	-100A	001
		11G	-100A	001
		11H	-100A	001
		11J	-100A	001
		11K	-100A	001
		11L	-100A	001
		11M	-100A	001
		11N	100A	001
		11P	-100A	001
		11Q	-100A	001
		11	-090A	001
550-33-300MBB		06A	-110B	001
		06B	110A	001
		06C	110A	001
		06D	-110B	001
			310A	001
		06E	-110B	001
		06F	-110B	001
			340A	001
		06G	-110B	001
		06H	110A	001
			380A	001

- ITEM NOT ILLUSTRATED

ALPHA/NUMERIC INDEX

PART NUMBER	AIRLINE STOCK NUMBER	FIG NUMBER	ITEM NUMBER	TOTAL REQ'D
		06J	-120C	001
			390A	001
		06K	120B	001
			310A	001
		06L	340A	002
		06M	-340B	002
		06N	120A	002
		06P	350A	002
		06Q	350A	002
		06R	120A	002
		06T	120A	002
		06U	120A	002
		06V	120A	002
		06W	340A	002
		06X	350A	002
		06Y	330A	002
		06Z	270A	002
		48A	120A	002
		48B	130A	002
		48C	140A	002
		48D	-270B	001
		48E	140B	001
		48F	140A	002
		48G	140A	002
		48H	140A	002
		48J	290B	001
		48K	140A	002
		48L	140A	002
		48M	140A	002
		48N	140A	002
		6	-100B	001
			270A	001
550MBB1		06A	110A	001
		06B	-110B	001
		06C	-110B	001

- ITEM NOT ILLUSTRATED

ALPHA/NUMERIC INDEX

PART NUMBER	AIRLINE STOCK NUMBER	FIG NUMBER	ITEM NUMBER	TOTAL REQ'D
		06D	110A	001
		06E	110A	001
		06F	110A	001
		06G	110A	001
		06H	300A	001
		06J	120A	001
		06K	120A	001
		06L	120A	001
		06M	120A	001
		06N	340A	001
		06P	120A	001
		06Q	120A	001
		06R	340A	001
		06T	340A	001
		06U	310A	001
		06W	140A	001
		06X	120A	001
		06Y	270A	001
		48D	270A	001
		48E	140A	001
		48J	290A	001
		48	270A	001
		6	100A	001
5L0009000200000		19A	-270B	001
		19B	220A	001
5L0009000600000		19B	-220C	001
		19	220A	001
5L0009000700000		19B	-220B	001
			-220F	001
		19C	270A	001
5L0009000800000		19A	270A	001
		19B	-220E	001
			-220G	001
5L0009300100000		19D	380A	001
5L0009500100000		19B	-220D	001

- ITEM NOT ILLUSTRATED

ALPHA/NUMERIC INDEX

PART NUMBER	AIRLINE STOCK NUMBER	FIG NUMBER	ITEM NUMBER	TOTAL REQ'D
5L0012000100000		18	050A	001
5L0024400100000		05A	140A	001
5L0024400200000		05A	160A	001
5L0024400300000		05A	-160D	001
5L0024400500000		05A	-160B	001
5L0033400205000		16A	170A	001
		16B	170A	001
		16	170A	001
5L0034600106000		19A	170A	001
		19B	170A	001
		19C	170A	001
		19D	240A	001
		19E	100A	001
		19F	100A	001
		19H	100A	001
		19J	160A	001
		19K	160A	001
		19	170A	001
5L0034600111000		19A	190A	002
		19B	190A	002
		19C	190A	002
		19D	260A	002
		19E	170A	002
		19F	170A	002
		19H	190A	002
		19J	250A	002
		19K	230A	002
		19	190A	002
5L0036400104000		14A	020A	001
		14B	020A	001
		14C	020A	001
		14	020A	001
5L0037500100000		18	010A	001
5L0044600109000		11A	100A	001
		11B	120A	001

- ITEM NOT ILLUSTRATED

ALPHA/NUMERIC INDEX

PART NUMBER	AIRLINE STOCK NUMBER	FIG NUMBER	ITEM NUMBER	TOTAL REQ'D
		11C	120A	001
		11D	110A	001
		11E	110A	001
		11F	110A	001
		11G	110A	001
		11H	110A	001
		11J	110A	001
		11K	110A	001
		11L	110A	001
		11M	110A	001
		11N	110A	001
		11P	110A	001
		11Q	110A	001
		11R	130A	001
		11	100A	001
5L0047600100000		17	020A	001
5L0047600102000		17A	050A	001
			090A	001
		17B	050A	001
		17	050A	001
5L0061000100000		19A	240A	002
		19B	042A	002
		19C	240A	002
		19D	290A	002
		19E	264A	002
		19F	280A	002
		19H	295A	002
5L0064200100000		26A	050A	001
		26B	-050B	001
		26C	050A	001
		26D	050A	001
		26E	050A	001
		26F	050A	001
		26G	050A	001
		26J	050A	001

- ITEM NOT ILLUSTRATED

ALPHA/NUMERIC INDEX

PART NUMBER	AIRLINE STOCK NUMBER	FIG NUMBER	ITEM NUMBER	TOTAL REQ'D
		26K	050A	001
		26M	050A	001
		26N	050A	001
		26P	050A	001
		26Q	030A	001
		26R	030A	001
		26S	030A	001
		26T	050A	001
		26U	030A	001
		26V	030A	001
		26	050A	001
5L0065600100000		17	130A	003
5L0066500100000		19B	100A	001
		19C	100A	001
		19D	080A	001
		19	100A	001
66333493		10A	040A	003
		10	040A	003
		19A	-236A	001
		19B	-196A	001
		19C	-226A	001
		19D	-306A	001
		19E	-166A	001
		19F	-166A	001
		19H	-180A	001
		19J	-240A	001
		19K	-220A	001
		19	-196A	001
		20A	100A	001
		20B	100A	001
		22K	200A	002
6TBD101761		31C	-370A	001
726388-3		26A	570A	002
		26C	500A	002
		26E	540A	002

- ITEM NOT ILLUSTRATED

ALPHA/NUMERIC INDEX

PART NUMBER	AIRLINE STOCK NUMBER	FIG NUMBER	ITEM NUMBER	TOTAL REQ'D
		26G	580A	002
		26J	580A	002
		26N	580A	002
		26P	580A	002
		26R	590A	002
		26T	580A	002
		26U	580A	002
		26	630A	002
770027		22A	190A	001
		22E	290A	001
770107		22A	-190B	001
		22E	-290B	001
774-081-31		05A	103A	001
		05B	085A	001
		05C	095A	001
		05D	095A	001
		05F	100A	001
		05G	100A	001
		05H	100A	001
		05J	100A	001
		5	113A	001
774-099-90-68		19B	-223D	001
		19E	310E	001
774-099-91-05		19B	-225B	001
		19E	-300E	001
774-101-79		05A	105A	001
		05B	090A	001
		05C	100A	001
		05D	100A	001
		05F	110A	001
		05G	110A	001
		05H	110A	001
		05J	110A	001
		5	115A	001
774-101-81		05A	107A	001

- ITEM NOT ILLUSTRATED

ALPHA/NUMERIC INDEX

PART NUMBER	AIRLINE STOCK NUMBER	FIG NUMBER	ITEM NUMBER	TOTAL REQ'D
		05B	100A	001
		05C	110A	001
		05D	110A	001
		05F	120A	001
		05G	120A	001
		05H	120A	001
		05J	120A	001
		5	117A	001
77408147		19A	-330A	001
		19B	-280A	001
		19C	-330A	001
		19D	-460A	001
		19	-280A	001
77408580		19A	275A	001
		19B	225A	001
		19C	275A	001
		19	225A	001
77408582		19A	-273B	001
		19B	-223B	001
		19C	273A	001
77409451		19B	223A	001
		19	223A	001
77409453		19A	273A	001
		19B	-223C	001
77409661		19D	390A	001
77409662		19D	400A	001
7800258		23B	010A	001
		23C	010A	001
		23D	010A	001
		23	-010C	001
7800259		23B	-010B	001
		23C	-010B	001
		23D	-010B	001
78536608		13B	-060B	AR
		13V	-060E	AR

- ITEM NOT ILLUSTRATED

ALPHA/NUMERIC INDEX

PART NUMBER	AIRLINE STOCK NUMBER	FIG NUMBER	ITEM NUMBER	TOTAL REQ'D
		13	-060B	001
800003511		26A	560A	001
		26C	490A	001
		26E	530A	001
		26G	570A	001
		26J	570A	001
		26N	570A	001
		26P	570A	001
		26R	580A	001
		26T	570A	001
		26U	570A	001
		26	620A	001
811215100		26A	550A	001
		26C	480A	001
		26E	520A	001
		26G	560A	001
		26J	560A	001
		26N	560A	001
		26P	560A	001
		26R	570A	001
		26T	560A	001
		26U	560A	001
		26	610A	001
		27	-400A	001
8427-11		20C	070A	001
8534		06A	112A	002
		06B	112A	002
		06C	130A	002
		06D	130A	002
			330A	002
		06E	130A	002
		06F	130A	002
			360A	002
		06G	130A	002
		06H	130A	002

- ITEM NOT ILLUSTRATED

ALPHA/NUMERIC INDEX

PART NUMBER	AIRLINE STOCK NUMBER	FIG NUMBER	ITEM NUMBER	TOTAL REQ'D
			320A	002
			400A	002
		06J	140A	002
			410A	002
		06K	140A	002
			330A	002
		06L	140A	002
			360A	002
		06M	140A	002
			360A	002
		06N	140A	002
			360A	002
		06P	140A	002
			370A	002
		06Q	140A	002
			370A	002
		06R	140A	004
			360A	002
		06T	140A	002
			360A	002
		06U	140A	002
			330A	001
		06V	140A	002
		06W	160A	002
			360A	002
		06X	140A	002
			370A	002
		06Y	290A	001
			350A	002
		06Z	290A	001
		48A	140A	002
		48B	150A	002
		48C	160A	002
		48D	290A	002
		48E	160A	002

- ITEM NOT ILLUSTRATED

ALPHA/NUMERIC INDEX

PART NUMBER	AIRLINE STOCK NUMBER	FIG NUMBER	ITEM NUMBER	TOTAL REQ'D
		48F	160A	002
		48G	160A	002
		48H	160A	002
		48J	310A	001
		48K	160A	002
		48L	160A	002
		48M	160A	002
		48N	160A	002
		48	290A	001
		6	102A	002
			290A	002
8587		06A	113A	002
		06B	113A	002
		06C	140A	002
		06D	140A	002
			340A	002
		06E	140A	002
		06F	140A	002
			370A	002
		06G	140A	002
		06H	140A	002
			330A	002
			410A	002
		06J	150A	002
			420A	002
		06K	150A	002
			340A	002
		06L	150A	002
			370A	002
		06M	150A	002
			370A	002
		06N	150A	002
			370A	002
		06P	150A	002
			380A	002

- ITEM NOT ILLUSTRATED

ALPHA/NUMERIC INDEX

PART NUMBER	AIRLINE STOCK NUMBER	FIG NUMBER	ITEM NUMBER	TOTAL REQ'D
		06Q	150A	002
			380A	002
		06R	150A	004
			370A	002
		06T	150A	002
			370A	002
		06U	150A	002
			340A	001
		06V	150A	002
		06W	170A	002
			370A	002
		06X	150A	002
			380A	002
		06Y	300A	001
			360A	002
		06Z	300A	001
		48A	150A	002
		48B	160A	002
		48C	170A	002
		48D	300A	002
		48E	170A	002
		48F	170A	002
		48G	170A	002
		48H	170A	002
		48J	320A	001
		48K	170A	002
		48L	170A	002
		48M	170A	002
		48N	170A	002
		48	300A	001
		6	103A	002
			300A	002
92-587-1		13A	-060D	001
928083-1		27A	130A	008
		27B	130A	008

- ITEM NOT ILLUSTRATED

ALPHA/NUMERIC INDEX

PART NUMBER	AIRLINE STOCK NUMBER	FIG NUMBER	ITEM NUMBER	TOTAL REQ'D
		27C	130A	008
		27D	150A	008
		27E	130A	008
		27	130A	008
9855DV		15B	090A	001
		15C	090A	001
		15E	080A	001
		15F	150A	001
		15G	150A	001
		15H	150A	001
		15J	150A	001
		15K	150A	001
		15L	150A	001
		15M	150A	001
		15N	150A	001
		15P	150A	001
		15Q	150A	001
		15R	330A	001
		15T	210A	001
		15U	210A	001
		15	-082A	001
9HV408882-00		21A	020A	001
		21B	020A	001
A2-254-0006-01		07A	150A	001
		07B	140A	001
		07C	130A	001
		07D	140A	001
		07E	120A	001
		07F	150A	001
		07G	130A	001
		07J	140A	001
		07K	130A	001
		07L	130A	001
		07M	120A	001
		07N	170A	001

- ITEM NOT ILLUSTRATED

ALPHA/NUMERIC INDEX

PART NUMBER	AIRLINE STOCK NUMBER	FIG NUMBER	ITEM NUMBER	TOTAL REQ'D
		07P	170A	001
		07Q	170A	001
		07R	170A	001
		07S	160A	001
		07T	160A	001
		07U	160A	001
		07V	170A	001
		07W	170A	001
		07X	170A	001
		07Y	210A	001
		07Z	170A	001
		49A	170A	001
		49B	170A	001
		49C	170A	001
		49	170A	001
		7	150A	001
A2-254-0006A01		07S	165A	001
		07T	165A	001
		07W	175A	001
		49B	175A	001
A2-254-0008-001		20	-010C	001
A2-254-0008-002		20	010A	001
A2-254-0008-003		20	-010B	001
A2-254-0008-005		20	-010E	001
A2-254-0008-012		20	-010D	001
A2-254-0008-205		20	060A	001
A2-254-0008-206		20	050A	001
A2-254-0008-207		20	040A	001
A2-254-0008-208		20	030A	001
A2-254-0008-210		20	080A	006
A2-254-0008-211		20	110A	002
A2-254-0008-215		20	090A	006
A2-254-0008-216		20	100A	002
A2-254-0008-220		20	070A	002
A2-254-0008-221		20	020A	002

- ITEM NOT ILLUSTRATED

ALPHA/NUMERIC INDEX

PART NUMBER	AIRLINE STOCK NUMBER	FIG NUMBER	ITEM NUMBER	TOTAL REQ'D
A2-254-0008-223		20	130A	002
A2-254-0008-500		20	-013C	001
A2-254-0008-501		20	-015C	001
A2-254-0008-502		20	013A	001
A2-254-0008-503		20	015A	001
A2-254-0008-504		20	-013B	001
A2-254-0008-505		20	-015B	001
A2-254-0008-508		20	-013E	001
A2-254-0008-509		20	-015E	001
A2-254-0008-522		20	-013D	001
A2-254-0008-523		20	-015D	001
A2-254-0011-04		06P	-350B	002
		06X	-350B	002
		48	-270B	002
A20054-3		20A	020A	001
		20B	020A	001
A20134-1		20C	020A	001
A2028-9		11R	100A	002
A2127053420800		21A	060A	001
		21B	060A	001
		21	060A	001
A2127053421600		21A	080A	001
		21B	080A	001
		21	080A	001
A2157036420000		21A	030A	001
		21B	030A	001
		21	040A	001
A221201000-000		21A	070A	001
		21B	070A	001
		21	070A	001
A221201300-000		21A	150A	001
		21B	150A	001
		21	150A	001
A2254001104		06W	-140B	002
		48D	-270C	002

- ITEM NOT ILLUSTRATED

ALPHA/NUMERIC INDEX

PART NUMBER	AIRLINE STOCK NUMBER	FIG NUMBER	ITEM NUMBER	TOTAL REQ'D
A225400201-000		13D	-060L	001
		13H	-060L	001
		13K	-060K	001
A225400201-002		13A	-060H	001
		13C	-060M	001
		13E	-060M	001
		13G	-060G	001
		13H	-060M	001
		13	-060N	001
A225400201-004		13D	-060M	001
		13J	-060N	001
A225400202-214		13U	040A	001
A225400202-215		13U	050A	001
A225400202-500		13V	-020B	002
A225400202-800		13A	020A	002
		13B	-020B	002
		13V	020A	002
		13	020A	002
A225400202-804		13	-020B	002
A225400205-200		10	030A	001
A225400205-230		10	030B	001
A225400205-278		10A	-030C	001
A225400206-200		13N	040A	001
		13P	060A	001
		13Q	060A	001
		13R	040A	001
		13S	060A	001
		13T	050A	001
		13U	070A	001
		13W	-090B	001
A225400206-208		13W	090A	001
A225400207-200		02A	170A	005
		02B	170A	005
		02C	160A	005
		02D	150A	005

- ITEM NOT ILLUSTRATED

ALPHA/NUMERIC INDEX

PART NUMBER	AIRLINE STOCK NUMBER	FIG NUMBER	ITEM NUMBER	TOTAL REQ'D
		2	170A	005
A225400207-202		2	190A	004
A225400207-204		02A	150A	004
		02B	150A	004
		02C	140A	004
		02D	130A	004
		2	150A	004
A225400207-206		02A	160A	004
		02B	160A	004
		02C	150A	004
		02D	140A	004
		2	160A	004
A225400208-000		06A	340A	001
		06C	340A	001
		06G	320A	001
		06H	430A	001
		06J	510A	001
		06K	380A	001
		06M	410A	001
		06P	390A	001
		06U	410A	001
		06V	380A	001
		06W	410A	001
		06X	410A	001
		10	100A	001
		48A	350A	001
		48B	390A	001
		48C	400A	001
		48D	350A	001
		48E	380A	001
		48F	360A	001
		48G	380A	001
		48H	370A	001
		48J	370A	001
		48K	370A	001

- ITEM NOT ILLUSTRATED

ALPHA/NUMERIC INDEX

PART NUMBER	AIRLINE STOCK NUMBER	FIG NUMBER	ITEM NUMBER	TOTAL REQ'D
A225400208-200		48L	370A	001
		48M	370A	001
		48N	450A	001
		6	320A	001
		06A	350A	001
		06C	350A	001
		06G	330A	001
		06H	440A	001
		06J	520A	001
		06K	390A	001
		06M	420A	001
		06P	400A	001
		06U	420A	001
		06V	390A	001
		06W	420A	001
		06X	420A	001
		10	110A	001
		48A	360A	001
		48B	400A	001
		48C	410A	001
		48D	360A	001
		48E	390A	001
		48F	370A	001
		48G	390A	001
		48H	380A	001
		48J	380A	001
		48K	380A	001
		48L	380A	001
		48M	380A	001
		48N	460A	001
A225400208-202		6	330A	001
		06A	370A	001
		06C	370A	001
		06G	350A	001
		06H	460A	001

- ITEM NOT ILLUSTRATED

ALPHA/NUMERIC INDEX

PART NUMBER	AIRLINE STOCK NUMBER	FIG NUMBER	ITEM NUMBER	TOTAL REQ'D
A225400208-204		06J	540A	001
		06K	410A	001
		06M	440A	001
		06P	420A	001
		06U	440A	001
		06V	410A	001
		06W	440A	001
		06X	440A	001
		10	120A	001
		48A	380A	001
		48B	420A	001
		48C	430A	001
		48D	380A	001
		48E	410A	001
		48F	390A	001
		48G	410A	001
		48H	400A	001
		48J	400A	001
		48K	400A	001
		48L	400A	001
		48M	400A	001
		48N	480A	001
		6	350A	001
		06A	360A	001
		06C	360A	001
		06G	340A	001
		06H	450A	001
		06J	530A	001
		06K	400A	001
		06M	430A	001
		06P	410A	001
		06U	430A	001
		06V	400A	001
		06W	430A	001
		06X	430A	001

- ITEM NOT ILLUSTRATED

ALPHA/NUMERIC INDEX

PART NUMBER	AIRLINE STOCK NUMBER	FIG NUMBER	ITEM NUMBER	TOTAL REQ'D
A225400208-208		10	130A	001
		48A	370A	001
		48B	410A	001
		48C	420A	001
		48D	370A	001
		48E	400A	001
		48F	380A	001
		48G	400A	001
		48H	390A	001
		48J	390A	001
		48K	390A	001
		48L	390A	001
		48M	390A	001
		48N	470A	001
		6	340A	001
		06A	400A	001
		06C	400A	001
		06G	380A	001
		06H	490A	001
		06J	570A	001
		06K	440A	001
		06M	470A	001
		06P	450A	001
		06U	470A	001
		06V	440A	001
		06W	470A	001
		06X	470A	001
		10	150A	001
		48A	410A	001
		48B	450A	001
		48C	460A	001
		48D	410A	001
		48E	440A	001
		48F	420A	001
		48G	440A	001

- ITEM NOT ILLUSTRATED

ALPHA/NUMERIC INDEX

PART NUMBER	AIRLINE STOCK NUMBER	FIG NUMBER	ITEM NUMBER	TOTAL REQ'D
A225400208-210		48H	430A	001
		48J	430A	001
		48K	430A	001
		48L	430A	001
		48M	430A	001
		48N	510A	001
		6	380A	001
		06A	380A	001
		06C	380A	001
		06G	360A	001
		06H	470A	001
		06J	550A	001
		06K	420A	001
		06M	450A	001
		06P	430A	001
		06U	450A	001
		06V	420A	001
		06W	450A	001
		06X	450A	001
		10	160A	001
		48A	390A	001
		48B	430A	001
		48C	440A	001
		48D	390A	001
		48E	420A	001
		48F	400A	001
		48G	420A	001
		48H	410A	001
		48J	410A	001
		48K	410A	001
		48L	410A	001
		48M	410A	001
		48N	490A	001
		6	360A	001
A225400211-210		07A	040A	001

- ITEM NOT ILLUSTRATED

ALPHA/NUMERIC INDEX

PART NUMBER	AIRLINE STOCK NUMBER	FIG NUMBER	ITEM NUMBER	TOTAL REQ'D
		07B	040A	001
		07C	040A	001
		07D	040A	001
		07E	040A	001
		07F	040A	001
		07G	040A	001
		07H	020A	001
		07J	040A	001
		07K	040A	001
		07L	040A	001
		07M	030A	001
		07N	040A	001
		07P	040A	001
		7	040A	001
A225400211-216		11A	130A	001
		11J	-140B	001
		11N	160A	001
		11Q	160A	001
		11	130A	001
A225400211-464		07Q	040A	001
		07R	040A	001
A225400216-204		07E	-040B	001
A225400216-210		11E	140A	001
A225400216-222		11B	150A	001
		11C	150A	001
		11D	140A	001
		11E	-140B	001
		11F	140A	001
		11G	140A	001
		11H	140A	001
		11J	140A	001
		11K	140A	001
		11L	160A	001
		11M	160A	001
		11N	-160B	001

- ITEM NOT ILLUSTRATED

ALPHA/NUMERIC INDEX

PART NUMBER	AIRLINE STOCK NUMBER	FIG NUMBER	ITEM NUMBER	TOTAL REQ'D
		11P	160A	001
		11Q	-160B	001
		11R	050A	001
A225400216-314		06P	-490A	001
		06U	-510A	001
		06X	-510A	001
		48A	-550A	001
		48D	-580A	001
		48E	-520A	001
		48J	-520A	001
		48M	-550A	001
		48N	295A	001
		48	-350A	001
A225400217-200		13N	090A	001
		13P	110A	001
		13Q	110A	001
		13R	090A	001
		13S	110A	001
		13T	100A	001
		13U	130A	001
		13W	110A	001
A225400217-204		13N	100A	001
		13P	120A	001
		13Q	120A	001
		13R	100A	001
		13S	120A	001
		13T	110A	001
		13U	140A	001
		13W	120A	001
A225400217-206		13N	120A	001
		13P	140A	001
		13Q	140A	001
		13R	120A	001
		13S	140A	001
		13T	130A	001

- ITEM NOT ILLUSTRATED

ALPHA/NUMERIC INDEX

PART NUMBER	AIRLINE STOCK NUMBER	FIG NUMBER	ITEM NUMBER	TOTAL REQ'D
		13U	160A	001
		13W	130A	001
A225400217-212		13N	150A	002
		13P	170A	002
		13Q	170A	002
		13R	150A	002
		13S	170A	002
		13T	160A	002
		13U	190A	002
		13W	140A	002
A225400221-202		06A	410A	002
		06C	410A	002
		06G	390A	002
		06H	500A	002
		06J	580A	002
		06K	450A	002
		06M	480A	002
		06P	460A	002
		06U	480A	002
		06V	450A	002
		06W	480A	002
		06X	480A	002
		10	180A	002
		48A	530A	002
		48B	460A	002
		48C	480A	002
		48D	215A	002
			217A	002
			430A	002
		48E	450A	002
		48J	460A	002
		48N	285A	004
		6	390A	002
A225400224-200		10A	010A	001
		10	010A	001

- ITEM NOT ILLUSTRATED

ALPHA/NUMERIC INDEX

PART NUMBER	AIRLINE STOCK NUMBER	FIG NUMBER	ITEM NUMBER	TOTAL REQ'D
A225400224-212		07A	180A	001
		07B	170A	001
		07C	160A	001
		07D	170A	001
		07E	150A	001
		07F	180A	001
		07G	160A	001
		07H	140A	001
		07J	170A	001
		07K	160A	001
		07L	160A	001
		07N	200A	001
		07P	200A	001
		07Q	200A	001
		07R	200A	001
		07S	190A	001
		07T	190A	001
		07U	190A	001
		07V	200A	001
		07W	200A	001
		07X	200A	001
		07Y	240A	001
		07Z	200A	001
		49A	200A	001
		49B	200A	001
		49C	200A	001
		49	200A	001
		7	180A	001
A225400224-222		07M	150A	001
A225400224-228		9	110A	001
A225400224-230		9	100A	002
A225400224-232		9	130A	001
A225400224-234		9	140A	002
A225400225-002		26A	150A	001
		26B	-190B	001

- ITEM NOT ILLUSTRATED

ALPHA/NUMERIC INDEX

PART NUMBER	AIRLINE STOCK NUMBER	FIG NUMBER	ITEM NUMBER	TOTAL REQ'D
		26	150A	001
A225400225-202		26A	220A	001
		26B	198A	001
		26	220A	001
A225400225-204		26A	200A	001
		26B	196A	001
		26	200A	001
A225400231-202		06A	013A	002
		06B	013A	002
		06C	013A	002
		06D	013A	002
		06E	013A	002
		06F	013A	002
		06G	013A	002
		06H	013A	002
		06J	013A	002
		06K	013A	002
		06L	013A	002
		06M	013A	002
		06N	013A	002
		06P	013A	002
		06Q	013A	002
		06R	013A	002
		06S	013A	002
		06T	013A	002
		06U	013A	002
		06V	013A	002
		6	013A	002
A225400231-214		06A	017A	001
		06B	017A	001
		06C	017A	001
		06D	017A	001
		06E	017A	001
		06F	017A	001
		06G	017A	001

- ITEM NOT ILLUSTRATED

ALPHA/NUMERIC INDEX

PART NUMBER	AIRLINE STOCK NUMBER	FIG NUMBER	ITEM NUMBER	TOTAL REQ'D
		06H	017A	001
		06J	017A	001
		06K	017A	001
		06L	017A	001
		06M	017A	001
		06N	017A	001
		06P	017A	001
		06Q	017A	001
		06R	017A	001
		06S	017A	001
		06T	017A	001
		06U	017A	001
		06V	017A	001
		6	017A	001
A225400231-362		06A	440A	001
		06B	310A	AR
		06E	320A	AR
		06N	380A	001
		06Q	400A	AR
		06Z	360A	AR
		48C	500A	001
		48E	-510A	AR
		48F	490A	001
		48J	470A	002
A225400232-208		06A	020A	002
			021A	001
		06B	020A	002
		06C	020A	002
		06D	020A	002
		06E	020A	001
			025A	001
		06F	020A	002
		06G	020A	002
		06H	020A	002
		06J	020A	002

- ITEM NOT ILLUSTRATED

ALPHA/NUMERIC INDEX

PART NUMBER	AIRLINE STOCK NUMBER	FIG NUMBER	ITEM NUMBER	TOTAL REQ'D
			021A	001
		06K	020A	002
		06L	020A	002
		06M	020A	002
			021A	001
		06N	020A	002
		06P	020A	002
		06Q	020A	001
			025A	001
		06R	020A	002
		06S	020A	002
		06T	020A	002
		06U	020A	002
		06V	020A	002
		06W	040A	002
		06X	020A	002
		06Y	020A	002
		06Z	020A	001
		07A	060A	002
		07B	060A	002
		07C	060A	002
		07D	060A	002
		07E	060A	002
		07F	090A	002
		07G	060A	002
		07H	040A	002
		07J	060A	002
		07K	060A	002
		07L	060A	002
		07M	050A	002
		07N	060A	002
		07P	060A	002
		07Q	060A	002
		07R	060A	002
		07S	050A	002

- ITEM NOT ILLUSTRATED

ALPHA/NUMERIC INDEX

PART NUMBER	AIRLINE STOCK NUMBER	FIG NUMBER	ITEM NUMBER	TOTAL REQ'D
		07T	050A	002
		07U	050A	002
		07V	050A	002
		07W	050A	002
		07X	050A	002
		07Y	050A	002
		07Z	050A	002
		48A	020A	002
			023A	001
		48B	020A	001
		48C	020A	001
		48D	020A	001
		48E	020A	001
		48F	020A	001
		48G	020A	001
		48H	020A	001
		48J	020A	001
		48K	020A	001
		48L	020A	001
		48M	020A	001
		48N	020A	001
		48	020A	002
		49A	050A	002
		49B	050A	002
		49C	050A	002
		49	050A	002
		6	020A	002
		7	060A	002
A225400232-216		06A	025A	001
		06E	-025B	001
		06J	025A	001
		06M	025A	001
		06Q	-025B	001
		06Z	025A	001
		48A	025A	001

- ITEM NOT ILLUSTRATED

ALPHA/NUMERIC INDEX

PART NUMBER	AIRLINE STOCK NUMBER	FIG NUMBER	ITEM NUMBER	TOTAL REQ'D
		48B	030A	001
		48C	030A	001
		48D	025A	001
		48E	030A	001
		48F	030A	001
		48G	030A	001
		48H	030A	001
		48J	030A	001
		48K	030A	001
		48L	030A	001
		48M	030A	001
		48N	030A	001
A225400233-200		06P	-385A	003
		06W	-145A	004
		06X	-385A	003
		48D	-305A	004
			-305B	003
		48	-305A	003
A225400234-214		13N	180A	003
		13P	200A	003
		13Q	200A	003
		13R	180A	003
		13S	200A	003
		13T	190A	003
		13U	220A	003
		13W	210A	003
A225400236-206		22K	210A	002
A225400236-550		06T	-019A	001
		06Z	027A	001
A225400238-000		02C	-020B	002
		02D	-020B	002
		2	020A	002
A225400238-056		02A	020A	002
		02B	020A	002
		02C	020A	002

- ITEM NOT ILLUSTRATED

ALPHA/NUMERIC INDEX

PART NUMBER	AIRLINE STOCK NUMBER	FIG NUMBER	ITEM NUMBER	TOTAL REQ'D
		02D	020A	002
A225400238-200		02C	-080B	001
		02D	-080B	001
		2	080A	001
A225400238-254		02A	080A	001
		02B	080A	001
		02C	080A	001
		02D	080A	001
A225400252-500		48N	310A	006
A225400263-902		11R	-001A	RF
		41M	-070M	001
		42N	-070M	001
A225400263-990		11G	-001P	RF
		41K	-070M	001
		41N	-070M	001
		41R	-070P	001
		41W	-070K	001
		41X	-070L	001
		41	-070P	001
		42E	-070K	001
		42J	-070L	001
		42P	-070H	001
		42	-070K	001
A225400270-500		01A	-070D	001
		01B	-070B	001
		01C	-070B	001
		01E	070A	001
		11	-001A	RF
		1	070A	001
A225400270-502		01A	-070C	001
		01B	-070C	001
		01D	-070B	001
		01E	-070D	001
		01F	-070E	001
		01G	-070G	001

- ITEM NOT ILLUSTRATED

ALPHA/NUMERIC INDEX

PART NUMBER	AIRLINE STOCK NUMBER	FIG NUMBER	ITEM NUMBER	TOTAL REQ'D
		01H	-070D	001
		11	-001D	RF
		1	-070D	001
		41B	-070B	001
A225400270-504		01A	-070F	001
		01B	-070E	001
		01D	-070E	001
		01E	-070C	001
		01F	-070C	001
		11	-001B	RF
		1	-070B	001
A225400270-506		01B	070A	001
		01E	-070F	001
		11	-001C	RF
		1	-070C	001
A225400270-508		01A	-070B	001
		01B	-070D	001
		01C	-070D	001
		01D	-070C	001
		01E	-070E	001
		01F	-070D	001
		01H	070A	001
		11	-001E	RF
		1	-070E	001
A225400270-510		01A	070A	001
		01B	-070G	001
		01C	070A	001
		01E	-070G	001
		01F	-070B	001
		01K	-070J	001
		11	-001F	RF
A225400270-512		01A	-070E	001
		01B	-070F	001
		01C	-070E	001
		01E	-070B	001

- ITEM NOT ILLUSTRATED

ALPHA/NUMERIC INDEX

PART NUMBER	AIRLINE STOCK NUMBER	FIG NUMBER	ITEM NUMBER	TOTAL REQ'D
		01F	-070J	001
		01G	-070D	001
		01H	-070C	001
		01J	-070C	001
		01K	-070K	001
		11	-001G	RF
		1	-070F	001
A225400270-514		01G	-070H	001
		11	-001J	RF
A225400270-522		01D	070A	001
		11A	-001A	RF
A225400270-524		11A	-001C	RF
		41	-070K	001
A225400270-526		01E	-070H	001
		11A	-001D	RF
A225400270-528		01F	-070G	001
		01N	-070J	001
		11A	-001G	RF
A225400270-530		01F	-070H	001
		11A	-001H	RF
A225400270-532		01F	-070K	001
		11A	-001J	RF
A225400270-534		01G	-070B	001
		01H	-070H	001
		11A	-001L	RF
A225400270-536		01G	-070C	001
		11A	-001M	RF
A225400270-538		01H	-070B	001
		11	-001L	RF
A225400270-540		01H	-070G	001
		11B	-001A	RF
A225400270-900		01A	-070G	001
		01C	-070G	001
		01H	-070F	001
		11	-001H	RF

- ITEM NOT ILLUSTRATED

ALPHA/NUMERIC INDEX

PART NUMBER	AIRLINE STOCK NUMBER	FIG NUMBER	ITEM NUMBER	TOTAL REQ'D
A225400270-904		01D	-070D	001
		11A	-001B	RF
A225400270-906		01E	-070J	001
		01F	070A	001
		01G	-070E	001
		01H	-070E	001
		01K	-070H	001
		01M	-070J	001
		11A	-001E	RF
A225400270-908		01F	-070F	001
		11A	-001F	RF
A225400270-910		01G	070A	001
		11A	-001K	RF
A2254002708502		01G	-070J	001
		11Q	-001E	RF
A2254002708506		01G	-070F	001
		11Q	-001D	RF
		41T	-070F	001
A2254002708508		01C	-070H	001
		01H	-070J	001
			-070L	001
		01K	-070L	001
		01L	-070J	001
			-070L	001
		11Q	-001A	RF
			-001F	RF
A2254002708510		11	-001M	RF
		41T	-070E	001
A2254002708512		01C	-070J	001
		01H	-070K	001
		11	-001N	RF
A2254002708516		01C	-070C	001
		11Q	-001B	RF
A2254002708520		01C	-070F	001
		11	-001K	RF

- ITEM NOT ILLUSTRATED

ALPHA/NUMERIC INDEX

PART NUMBER	AIRLINE STOCK NUMBER	FIG NUMBER	ITEM NUMBER	TOTAL REQ'D
A2254002708522		01D	-070F	001
		11A	-001N	RF
A2254002708526		01L	-070K	001
		11Q	-001C	RF
A225400272-000		11A	-010B	001
		11B	010A	001
		11J	-010B	001
		11Q	010A	001
		11	-010B	001
A225400272-008		11B	-010B	001
		11C	010A	001
		11D	010A	001
		11E	010A	001
		11F	010A	001
		11G	010A	001
		11H	010A	001
		11J	010A	001
		11K	010A	001
		11L	010A	001
		11M	010A	001
		11N	010A	001
		11P	010A	001
		11R	010A	001
A225400272-200		11A	010A	001
		11	010A	001
A225400272-202		11A	050A	002
		11B	060A	002
		11C	060A	002
		11D	060A	002
		11E	060A	002
		11F	060A	002
		11G	060A	002
		11H	060A	002
		11J	060A	002
		11K	060A	002

- ITEM NOT ILLUSTRATED

ALPHA/NUMERIC INDEX

PART NUMBER	AIRLINE STOCK NUMBER	FIG NUMBER	ITEM NUMBER	TOTAL REQ'D
		11L	060A	002
		11M	060A	002
		11N	060A	002
		11P	060A	002
		11Q	060A	002
		11R	030A	002
		11	050A	002
A225400272-205		11A	060A	001
		11B	070A	001
		11C	070A	001
		11D	070A	001
		11E	070A	001
		11F	070A	001
		11G	070A	001
		11H	070A	001
		11J	070A	001
		11K	070A	001
		11L	070A	001
		11M	070A	001
		11N	070A	001
		11P	070A	001
		11Q	070A	001
		11R	040A	001
		11	060A	001
A225400276-500		01K	-070B	001
		11B	-001L	RF
A225400276-502		01J	-070B	001
		01K	-070E	001
		01L	-070E	001
		01N	-070E	001
		01P	-070D	001
		01Q	-070L	001
		01T	070A	001
		01U	-070C	001
		11B	-001C	RF

- ITEM NOT ILLUSTRATED

ALPHA/NUMERIC INDEX

PART NUMBER	AIRLINE STOCK NUMBER	FIG NUMBER	ITEM NUMBER	TOTAL REQ'D
		41B	-070D	001
		42F	-070K	001
A225400276-504		01J	-070G	001
		01P	070A	001
		11B	-001G	RF
A225400276-506		01N	-070K	001
		01Q	-070G	001
		11D	-001B	RF
A225400276-508		01J	-070E	001
		01K	-070C	001
		01M	-070D	001
		01N	-070B	001
		11B	-001E	RF
A225400276-512		01N	-070D	001
		01Q	-070C	001
		01R	-070B	001
		11C	-001E	RF
A225400276-514		01M	-070G	001
		11D	-001A	RF
		41Z	-070E	001
		42L	070A	001
A225400276-526		01R	070A	001
		11D	-001K	RF
A225400276-528		01M	070A	001
		01U	070A	001
		11C	-001J	RF
A225400276-530		01J	-070D	001
		01N	-070C	001
		01T	-070K	001
		11B	-001D	RF
A225400276-532		01J	070A	001
		11B	-001B	RF
A225400276-534		01P	-070B	001
		11D	-001G	RF
A225400276-536		01K	-070D	001

- ITEM NOT ILLUSTRATED

ALPHA/NUMERIC INDEX

PART NUMBER	AIRLINE STOCK NUMBER	FIG NUMBER	ITEM NUMBER	TOTAL REQ'D
		01M	-070H	001
		01Q	-070B	001
		11C	-001C	RF
A225400276-538		01L	-070D	001
		11C	-001H	RF
A225400276-540		11L	-001A	RF
		41S	-070L	001
		41V	070A	001
		41Z	070A	001
		42A	-070F	001
A225400276-542		01K	070A	001
		01P	-070F	001
		01Y	-070H	001
		11B	-001K	RF
		41R	070A	001
A225400276-544		01K	-070F	001
		01L	-070G	001
		01S	-070D	001
		11C	-001A	RF
A225400276-546		01J	-070K	001
		01P	-070E	001
		01V	-070K	001
		11C	-001D	RF
A225400276-548		01L	-070C	001
		11C	-001G	RF
A225400276-550		01M	-070B	001
		11C	-001K	RF
A225400276-552		11C	-001M	RF
		41B	-070E	001
A225400276-554		01S	-070F	001
		11D	-001C	RF
		41	-070L	001
A225400276-556		01N	-070G	001
		11D	-001D	RF
A225400276-558		01P	-070G	001

- ITEM NOT ILLUSTRATED

ALPHA/NUMERIC INDEX

PART NUMBER	AIRLINE STOCK NUMBER	FIG NUMBER	ITEM NUMBER	TOTAL REQ'D
		01X	-070K	001
		11D	-001J	RF
A225400276-560		01S	-070J	001
		11E	-001B	RF
A225400276-562		01Q	-070K	001
		11D	-001L	RF
		41K	-070B	001
		41R	-070G	001
		41X	070A	001
		42J	-070D	001
A225400276-564		01Q	-070F	001
		11E	-001A	RF
		41B	070A	001
A225400276-566		01T	-070E	001
		01U	-070D	001
		11E	-001F	RF
A225400276-568		01S	-070C	001
		01Z	-070G	001
		11G	-001E	RF
A225400276-570		01T	-070C	001
		01V	-070G	001
		11E	-001D	RF
		41B	-070J	001
		41D	-070H	001
		41G	-070J	001
		41K	-070G	001
		41M	-070H	001
		41N	-070C	001
		41T	-070C	001
		41W	-070D	001
		41X	-070E	001
		42E	-070H	001
		42	070A	001
A225400276-572		01U	-070B	001
		11E	-001J	RF

- ITEM NOT ILLUSTRATED

ALPHA/NUMERIC INDEX

PART NUMBER	AIRLINE STOCK NUMBER	FIG NUMBER	ITEM NUMBER	TOTAL REQ'D
A225400276-574		01P	-070K	001
		01S	-070H	001
		01U	-070E	001
		01V	-070B	001
		01X	-070E	001
		01Y	070A	001
		01Z	-070D	001
		11E	-001M	RF
		11G	-001H	RF
		41D	-070G	001
		41F	-070B	001
		41G	-070M	001
		41H	-070E	001
		41M	-070J	001
		41S	-070J	001
		41V	-070C	001
		42A	-070D	001
		42D	-070L	001
		42E	-070F	001
		42G	-070K	001
		42L	-070H	001
		42N	-070J	001
		42T	-070C	001
A225400276-576		01T	-070F	001
		01V	-070E	001
		11E	-001G	RF
		41C	-070H	001
		41D	-070L	001
		41H	-070H	001
		41K	-070E	001
		41R	-070L	001
		41W	-070J	001
		42E	-070E	001
		42P	-070D	001
A225400276-578		01U	-070G	001

- ITEM NOT ILLUSTRATED

ALPHA/NUMERIC INDEX

PART NUMBER	AIRLINE STOCK NUMBER	FIG NUMBER	ITEM NUMBER	TOTAL REQ'D
		01V	-070D	001
		11F	-001B	RF
		41A	-070J	001
		41J	-070C	001
		41R	-070K	001
		42C	-070J	001
		42H	-070D	001
		42M	-070G	001
A225400276-580		01U	-070F	001
		01X	-070F	001
		11F	-001A	RF
		41A	-070H	001
		41	-070J	001
A225400276-582		01U	-070H	001
		01X	-070D	001
		11F	-001C	RF
		41C	-070F	001
A225400276-584		01S	-070G	001
		01T	-070M	001
		01V	-070J	001
		01W	-070J	001
		01Y	-070D	001
		11F	-001J	RF
		41F	-070F	001
		41G	-070K	001
		41H	-070L	001
		41N	-070J	001
		41	-070C	001
		42S	-070K	001
A225400276-586		01S	-070E	001
		01V	070A	001
		11E	-001H	RF
		41A	070A	001
		41S	-070B	001
		41T	-070D	001

- ITEM NOT ILLUSTRATED

ALPHA/NUMERIC INDEX

PART NUMBER	AIRLINE STOCK NUMBER	FIG NUMBER	ITEM NUMBER	TOTAL REQ'D
		41	-070H	001
A225400276-588		01S	-070B	001
		01T	-070L	001
		01V	-070F	001
		01W	-070H	001
		01Z	-070C	001
		11F	-001G	RF
		41B	-070L	001
		41C	-070C	001
		41G	-070D	001
		41H	-070D	001
		41M	-070E	001
		41N	-070E	001
		41X	-070J	001
		42E	-070D	001
		42P	-070B	001
A225400276-590		01Q	-070D	001
		01T	-070H	001
		01V	-070L	001
		01W	-070G	001
		01Y	-070B	001
		11E	-001L	RF
		41B	-070H	001
		41D	-070J	001
		41G	-070H	001
		41H	-070F	001
		41M	-070F	001
		41N	-070D	001
		41W	-070F	001
		41X	-070F	001
A225400276-592		01L	-070H	001
		01V	-070H	001
		01W	070A	001
		01X	070A	001
		01Y	-070C	001

- ITEM NOT ILLUSTRATED

ALPHA/NUMERIC INDEX

PART NUMBER	AIRLINE STOCK NUMBER	FIG NUMBER	ITEM NUMBER	TOTAL REQ'D
		11E	-001K	RF
		41C	070A	001
		41F	-070G	001
		41G	-070E	001
		41H	-070G	001
		41M	-070G	001
		41R	-070F	001
		41X	-070K	001
A225400276-594		01X	-070J	001
		11G	-001D	RF
		41D	-070K	001
		41G	-070F	001
		41H	070A	001
		41K	-070H	001
		42B	-070H	001
A225400276-596		11G	-001J	RF
		41A	-070E	001
		41L	-070D	001
		41P	-070H	001
		41V	-070K	001
		41X	-070D	001
		41	-070F	001
		42A	-070C	001
		42B	-070B	001
		42D	-070B	001
		42L	-070F	001
		42U	-070C	001
		42	-070F	001
A225400276-598		11G	-001M	RF
		41F	-070D	001
		41H	-070B	001
A225400276-670		11J	-001G	RF
		41L	-070F	001
A225400276-848		11J	-001C	RF
		41J	-070E	001

- ITEM NOT ILLUSTRATED

ALPHA/NUMERIC INDEX

PART NUMBER	AIRLINE STOCK NUMBER	FIG NUMBER	ITEM NUMBER	TOTAL REQ'D
		41L	-070C	001
A225400276-900		01J	-070F	001
		11B	-001F	RF
A225400276-904		01J	-070H	001
		11B	-001H	RF
		42B	-070G	001
		42D	-070K	001
		42N	-070K	001
		42U	070A	001
A225400276-906		01L	-070B	001
		01M	-070C	001
		01P	-070J	001
		01T	-070J	001
		11C	-001F	RF
A225400276-908		01K	-070G	001
		01M	-070F	001
		01Q	-070J	001
		11C	-001B	RF
A225400276-910		01J	-070J	001
		11B	-001J	RF
A225400276-914		01M	-070E	001
		11C	-001L	RF
A225400276-916		01P	-070C	001
		11D	-001H	RF
A225400276-918		01N	-070F	001
		11D	-001F	RF
A225400276-920		01N	-070H	001
		11D	-001E	RF
A225400276-922		01P	-070H	001
		11G	-001C	RF
A225400276-924		01T	-070D	001
		11E	-001E	RF
		41A	-070D	001
		41H	-070C	001
		41M	-070B	001

- ITEM NOT ILLUSTRATED

ALPHA/NUMERIC INDEX

PART NUMBER	AIRLINE STOCK NUMBER	FIG NUMBER	ITEM NUMBER	TOTAL REQ'D
		41N	-070B	001
		41	-070E	001
		42E	-070J	001
		42J	-070K	001
		42K	-070J	001
		42N	-070B	001
		42R	-070J	001
A225400276-926		01T	-070B	001
		11E	-001C	RF
		41D	-070B	001
		41K	-070C	001
		41M	-070C	001
A225400276-928		01U	-070J	001
		01Y	-070G	001
		01Z	-070F	001
		11F	-001D	RF
		41A	-070G	001
		41B	-070G	001
		41D	-070F	001
		41G	-070G	001
		41Z	-070D	001
		42Q	-070B	001
		42S	070A	001
		42U	-070B	001
A225400276-932		01Q	-070H	001
		01U	-070K	001
		01X	-070C	001
		01Y	-070F	001
		11D	-001M	RF
		41C	-070E	001
		41F	070A	001
		41H	-070J	001
		41N	-070H	001
		41W	-070B	001
		41X	-070C	001

- ITEM NOT ILLUSTRATED

ALPHA/NUMERIC INDEX

PART NUMBER	AIRLINE STOCK NUMBER	FIG NUMBER	ITEM NUMBER	TOTAL REQ'D
		42	-070B	001
A225400276-934		01Q	-070E	001
		01W	-070D	001
		01Z	-070H	001
		11F	-001E	RF
		41C	-070B	001
		41D	070A	001
		41G	-070C	001
		41J	-070F	001
		41K	-070F	001
		41M	-070D	001
		41R	-070B	001
		41T	-070B	001
		41Y	-070E	001
		42A	-070L	001
		42B	-070J	001
		42G	-070C	001
		42H	-070J	001
		42K	070A	001
		42M	-070E	001
		42Q	-070F	001
		42R	-070H	001
A225400276-936		01X	-070B	001
		01Z	-070B	001
		11G	-001A	RF
		41D	-070C	001
		42J	-070G	001
		42N	-070H	001
		42P	-070F	001
A225400276-938		01W	-070C	001
		11F	-001K	RF
		41R	-070M	001
A225400276-940		01S	070A	001
		01W	-070F	001
		01Y	-070E	001

- ITEM NOT ILLUSTRATED

ALPHA/NUMERIC INDEX

PART NUMBER	AIRLINE STOCK NUMBER	FIG NUMBER	ITEM NUMBER	TOTAL REQ'D
A225400276-942		11F	-001H	RF
		41G	-070L	001
		41P	-070F	001
		41	-070G	001
		42G	-070H	001
		42H	070A	001
		01W	-070E	001
		01X	-070L	001
		01Z	070A	001
		11F	-001L	RF
		41C	-070G	001
		41D	-070D	001
		41F	-070E	001
		41K	070A	001
		41L	-070B	001
		41N	-070G	001
		41P	-070C	001
		41T	070A	001
		41Y	070A	001
		41	070A	001
		42A	-070K	001
		42C	-070B	001
		42D	-070F	001
		42E	-070B	001
		42G	-070D	001
		42J	070A	001
		42M	-070B	001
		42P	-070E	001
A225400276-944		42	-070H	001
		01W	-070K	001
		01X	-070H	001
		11F	-001F	RF
		42R	-070G	001
		42S	-070J	001
		42T	-070E	001

- ITEM NOT ILLUSTRATED

ALPHA/NUMERIC INDEX

PART NUMBER	AIRLINE STOCK NUMBER	FIG NUMBER	ITEM NUMBER	TOTAL REQ'D
A225400276-946		01X	-070G	001
		01Y	-070K	001
		11G	-001B	RF
		41C	-070D	001
		41F	-070H	001
		41H	-070M	001
		41Q	080A	001
		41S	-070D	001
		42C	-070E	001
		42G	-070E	001
		42J	-070C	001
		42K	-070D	001
		42Q	-070E	001
		42S	-070C	001
		42	-070D	001
A225400276-948		01Y	-070J	001
		11G	-001F	RF
		41A	-070K	001
		41V	-070J	001
		41Y	-070F	001
		42C	-070K	001
		42M	070A	001
		42N	-070C	001
		42R	-070D	001
		42S	-070B	001
A225400276-952		11G	-001G	RF
		41K	-070D	001
		41N	-070F	001
		41R	-070C	001
		41W	-070G	001
		41X	-070G	001
		41	-070B	001
		42E	-070G	001
		42J	-070B	001
		42P	-070G	001

- ITEM NOT ILLUSTRATED

ALPHA/NUMERIC INDEX

PART NUMBER	AIRLINE STOCK NUMBER	FIG NUMBER	ITEM NUMBER	TOTAL REQ'D
		42	-070C	001
A225400276-954		11G	-001K	RF
		41A	-070B	001
A225400276-956		11G	-001L	RF
		41F	-070C	001
A225400276-958		11J	-001A	RF
		41A	-070F	001
		41J	-070D	001
		41P	-070B	001
A225400276-960		11J	-001B	RF
		41H	-070K	001
		41J	070A	001
		41R	-070D	001
		41U	-070B	001
		41V	-070G	001
		41W	-070E	001
		41X	-070B	001
		41Y	-070H	001
		42A	-070G	001
		42B	-070D	001
		42H	-070E	001
		42J	-070J	001
		42L	-070E	001
		42M	-070D	001
		42R	-070E	001
		42	-070J	001
A225400276-964		11J	-001F	RF
		41K	-070J	001
		41Z	-070H	001
A225400276-966		11J	-001D	RF
		41J	-070H	001
		41U	070A	001
		41Z	-070C	001
		42C	-070C	001
		42G	-070L	001

- ITEM NOT ILLUSTRATED

ALPHA/NUMERIC INDEX

PART NUMBER	AIRLINE STOCK NUMBER	FIG NUMBER	ITEM NUMBER	TOTAL REQ'D
		42H	-070G	001
		42L	-070L	001
		42N	-070L	001
A225400276-968		11J	-001E	RF
		41J	-070J	001
		41L	070A	001
		41S	-070C	001
A225400276-970		11L	-001B	RF
		42N	-070G	001
		42S	-070G	001
A225400276-982		11J	-001J	RF
		41J	-070B	001
		41V	-070H	001
		41Y	-070D	001
A225400276-990		11D	-001N	RF
		41H	-070N	001
		41N	-070L	001
A225400276-992		11E	-001N	RF
		41H	-070P	001
A2254002768506		01N	070A	001
		01Q	-070M	001
		11N	-001H	RF
A2254002768508		01L	-070F	001
			-070M	001
		11N	-001C	RF
			-001K	RF
A2254002768512		01L	070A	001
		11C	-001N	RF
A2254002768574		11N	-001L	RF
A2254002768574		11N	-001F	RF
		41P	-070D	001
		41R	-070H	001
			-070N	001
		41	-070D	001
			-070N	001

- ITEM NOT ILLUSTRATED

ALPHA/NUMERIC INDEX

PART NUMBER	AIRLINE STOCK NUMBER	FIG NUMBER	ITEM NUMBER	TOTAL REQ'D
A2254002768578		01T	-070G	001
		11N	-001E	RF
		42D	-070J	001
		42K	-070E	001
A2254002768594		11N	-001J	RF
		41D	-070M	001
A2254002768912		11N	-001A	RF
		41B	-070C	001
A2254002768930		01Q	070A	001
		01S	-070K	001
		01V	-070C	001
		01W	-070B	001
		01Z	-070E	001
		11N	-001B	RF
		41B	-070K	001
		41D	-070E	001
		41G	-070B	001
		41M	-070K	001
		41N	070A	001
		41W	-070C	001
A2254002768942		01Z	-070J	001
		11F	-001M	RF
		11N	-001D	RF
		41F	-070K	001
		41K	-070L	001
		41L	-070J	001
		41R	-070J	001
		41S	070A	001
		41W	-070H	001
		41X	-070H	001
		41Z	-070K	001
		41	-070M	001
		42A	-070M	001
		42D	-070M	001
		42F	-070G	001

- ITEM NOT ILLUSTRATED

ALPHA/NUMERIC INDEX

PART NUMBER	AIRLINE STOCK NUMBER	FIG NUMBER	ITEM NUMBER	TOTAL REQ'D
A2254002768948		11N	-001G	RF
		42C	-070L	001
A2254002768960		11J	-001K	RF
		41J	-070L	001
		41U	-070F	001
		41V	-070L	001
		41Y	-070K	001
A225400278-502		11H	-001A	RF
		41A	-070C	001
		41K	-070K	001
		41P	-070G	001
		41U	-070C	001
		42L	-070J	001
A225400278-504		11H	-001B	RF
		41E	070A	001
A225400278-506		11H	-001C	RF
		41F	-070J	001
A225400278-508		11H	-001D	RF
		41G	070A	001
A225400278-510		11H	-001E	RF
		41J	-070G	001
		41U	-070D	001
		42C	-070D	001
		42F	-070H	001
		42H	-070H	001
		42U	-070H	001
A225400278-514		11H	-001H	RF
		41L	-070E	001
		41V	-070D	001
		41Y	-070J	001
		42A	-070E	001
		42D	-070C	001
		42H	-070F	001
		42L	-070D	001
		42M	-070C	001

- ITEM NOT ILLUSTRATED

ALPHA/NUMERIC INDEX

PART NUMBER	AIRLINE STOCK NUMBER	FIG NUMBER	ITEM NUMBER	TOTAL REQ'D
		42N	070A	001
		42Q	-070J	001
		42R	-070C	001
		42S	-070F	001
		42T	-070D	001
		42U	-070G	001
A225400278-516		11K	-001A	RF
		41P	-070J	001
		42B	-070K	001
		42F	-070F	001
		42G	070A	001
		42L	-070B	001
		42T	-070J	001
A225400278-518		11K	-001B	RF
		41R	-070E	001
		42E	070A	001
		42K	-070H	001
		42L	-070K	001
		42R	-070B	001
		42T	-070F	001
A225400278-520		11K	-001C	RF
		41S	-070F	001
A225400278-522		11K	-001E	RF
		41S	-070K	001
A225400278-524		11K	-001F	RF
		41W	070A	001
		42A	-070B	001
		42E	-070C	001
		42G	-070J	001
		42J	-070E	001
		42K	-070G	001
		42	-070G	001
A225400278-530		11K	-001K	RF
		41Z	-070G	001
		42G	-070M	001

- ITEM NOT ILLUSTRATED

ALPHA/NUMERIC INDEX

PART NUMBER	AIRLINE STOCK NUMBER	FIG NUMBER	ITEM NUMBER	TOTAL REQ'D
A225400278-532		11M	-001B	RF
		42D	-070E	001
		42G	-070G	001
A225400278-534		11M	-001F	RF
		41M	-070L	001
A225400278-536		11M	-001J	RF
		42G	-070B	001
		42N	-070D	001
		42Q	-070C	001
		42S	-070E	001
A225400278-538		11M	-001H	RF
		42F	-070L	001
		42H	-070B	001
		42Q	-070H	001
A225400278-540		11M	-001G	RF
		42F	-070J	001
		42T	-070B	001
A225400278-542		11P	-001G	RF
		42R	-070K	001
A225400278-544		11P	-001H	RF
		42U	-070F	001
A225400278-564		11P	-001J	RF
		42H	-070L	001
A225400278-574		11H	-001N	RF
		41G	-070N	001
A225400278-578		11H	-001P	RF
		41V	-070M	001
		41Y	-070L	001
A225400278-800		11H	-001F	RF
		41J	-070K	001
		41L	-070H	001
		41P	-070E	001
		41S	-070E	001
		41U	-070E	001
		41V	-070B	001

- ITEM NOT ILLUSTRATED

ALPHA/NUMERIC INDEX

PART NUMBER	AIRLINE STOCK NUMBER	FIG NUMBER	ITEM NUMBER	TOTAL REQ'D
		41Y	-070C	001
		41Z	-070B	001
		42A	-070H	001
		42B	-070F	001
		42D	070A	001
		42F	-070D	001
		42K	-070C	001
A225400278-802		11H	-001G	RF
		41M	070A	001
		41S	-070G	001
A225400278-804		11H	-001J	RF
		41L	-070G	001
A225400278-806		11H	-001K	RF
		41P	070A	001
		41V	-070E	001
		41Y	-070B	001
		42A	-070J	001
		42F	070A	001
		42H	-070K	001
A225400278-808		11H	-001L	RF
		41N	-070K	001
		42J	-070F	001
		42	-070E	001
A225400278-810		11K	-001D	RF
		41S	-070H	001
		41V	-070F	001
		42B	070A	001
		42D	-070D	001
A225400278-812		11K	-001G	RF
		41Y	-070G	001
A225400278-816		11K	-001J	RF
		41Z	-070F	001
		42B	-070E	001
A225400278-818		11K	-001H	RF
		42A	070A	001

- ITEM NOT ILLUSTRATED

ALPHA/NUMERIC INDEX

PART NUMBER	AIRLINE STOCK NUMBER	FIG NUMBER	ITEM NUMBER	TOTAL REQ'D
		42C	070A	001
		42F	-070E	001
		42G	-070F	001
		42T	-070G	001
A225400278-820		11M	-001A	RF
		42C	-070G	001
		42T	070A	001
A225400278-822		11K	-001M	RF
		42B	-070C	001
A225400278-824		11H	-001M	RF
		42C	-070F	001
		42K	-070K	001
		42S	-070D	001
A225400278-826		11M	-001E	RF
		42F	-070C	001
A225400278-828		11M	-001C	RF
		42D	-070G	001
		42L	-070C	001
		42S	-070H	001
A225400278-830		11M	-001D	RF
		42D	-070H	001
		42K	-070F	001
A225400278-832		11M	-001L	RF
		42J	-070H	001
		42P	-070C	001
A225400278-834		11M	-001K	RF
		42L	-070G	001
		42Q	070A	001
		42T	-070L	001
A225400278-836		11M	-001N	RF
		42N	-070F	001
		42T	-070K	001
A225400278-838		11M	-001M	RF
		42N	-070E	001
		42T	-070H	001

- ITEM NOT ILLUSTRATED

ALPHA/NUMERIC INDEX

PART NUMBER	AIRLINE STOCK NUMBER	FIG NUMBER	ITEM NUMBER	TOTAL REQ'D
A225400278-840		11P	-001A	RF
		42P	070A	001
A225400278-842		11P	-001B	RF
		42Q	-070D	001
		42U	-070E	001
A225400278-844		11P	-001C	RF
		42Q	-070G	001
A225400278-846		11P	-001D	RF
		42Q	-070K	001
A225400278-848		11P	-001E	RF
		42R	070A	001
		42U	-070D	001
A225400278-850		11P	-001F	RF
		42R	-070F	001
		42S	-070L	001
A225400278-866		11P	-001K	RF
		42K	-070B	001
A225400278-900		11K	-001L	RF
		41Z	-070J	001
		42B	-070L	001
		42C	-070H	001
		42F	-070B	001
		42H	-070C	001
		42M	-070F	001
A225400278-926		11G	-001N	RF
		42C	-070M	001
		42G	-070N	001
A225400278-928		11M	-001P	RF
		42L	-070M	001
		42T	-070M	001
A225400278-932		11H	-001Q	RF
		41L	-070K	001
A225400400-600		20A	-010B	001
A225400400-602		20A	-010C	001
		20B	-010B	001

- ITEM NOT ILLUSTRATED

ALPHA/NUMERIC INDEX

PART NUMBER	AIRLINE STOCK NUMBER	FIG NUMBER	ITEM NUMBER	TOTAL REQ'D
A225400400-610		20B	-010J	001
A225400400-612		20A	-010D	001
A225400400-620		20A	-010M	001
A225400400-622		20B	-010C	001
A225400400-624		20A	-010H	001
A225400400-626		20A	-010G	001
A225400400-628		20B	010A	001
A225400400-630		20B	-010G	001
A225400400-632		20B	-010H	001
A225400400-642		20A	-010N	001
A225400400-650		20A	-010K	001
A225400400-652		20A	010A	001
A225400400-654		20A	-010J	001
A225400400-656		20A	-010E	001
A225400400-658		20A	-010L	001
A225400400-670		20A	-010F	001
A225400400-674		20B	-010D	001
A225400400-676		20A	-010P	001
		20B	-010E	001
A225400400-678		20B	-010F	001
A225400401-000		20A	040A	001
		20B	040A	001
		20C	040A	001
A225400403-502		20A	-080K	001
A225400403-600		20A	-080H	001
A225400403-602		20A	080A	001
A225400403-604		20A	-080D	001
A225400403-612		20A	-080J	001
A225400403-616		20B	-080G	001
A225400403-618		20A	-080B	001
A225400403-620		20A	-080F	001
A225400403-626		20A	-080C	001
A225400403-628		20A	-080E	001
A225400403-634		20A	-080G	001
A225400403-636		20A	-080M	001

- ITEM NOT ILLUSTRATED

ALPHA/NUMERIC INDEX

PART NUMBER	AIRLINE STOCK NUMBER	FIG NUMBER	ITEM NUMBER	TOTAL REQ'D
		20B	-080C	001
A225400403-640		20B	080A	001
A225400403-644		20B	-080B	001
A225400403-648		20B	-080E	001
A225400403-650		20B	-080D	001
A225400403-652		20B	-080F	001
A225400403-668		20A	-080L	001
A225400411-000		19A	130A	001
		19B	130A	001
		19C	130A	001
		19D	160A	001
		19	130A	001
A225400411-001		19A	120A	001
		19B	120A	001
		19C	120A	001
		19D	100A	001
		19	120A	001
A225400411-202		19A	121A	001
			131A	001
		19B	121A	001
			131A	001
		19C	121A	001
			131A	001
		19D	110A	001
			170A	001
		19	121A	001
			131A	001
A225400414-200		19E	110A	002
		19F	110A	002
		19H	110A	002
		19J	170A	002
		19K	170A	002
A225400414-202		19E	120A	002
		19F	120A	002
		19H	120A	002

- ITEM NOT ILLUSTRATED

ALPHA/NUMERIC INDEX

PART NUMBER	AIRLINE STOCK NUMBER	FIG NUMBER	ITEM NUMBER	TOTAL REQ'D
		19J	180A	002
		19K	180A	002
A225400414-512		19A	-030D	001
		19B	-030B	001
		19C	030A	001
		19D	-030B	001
A225400414-514		19A	030A	001
		19D	030A	001
A225400414-516		19A	-030B	001
		19B	030A	001
A225400414-518		19A	-030C	001
A225400414-552		19	030A	001
A225400414-554		19E	-070D	001
A225400414-556		19	-030B	001
A225400414-558		19F	-070C	001
		19H	070A	001
A225400414-700		19E	070A	001
		19F	070A	001
		19H	-070B	001
		19J	070A	001
A225400414-702		19E	-070B	001
A225400414-704		19E	-070F	001
		19F	-070B	001
A225400414-718		19E	-070C	001
A225400414-720		19F	-070F	001
A225400414-722		19E	-070E	001
A225400414-724		19F	-070E	001
A225400414-726		19F	-070D	001
		19H	-070C	001
A225400414-730		19F	-070G	001
A225400414-732		19F	-070H	001
		19H	-070E	001
A225400414-738		19F	-070J	001
A225400414-740		19H	-070D	001
A225400414-742		19H	-070F	001

- ITEM NOT ILLUSTRATED

ALPHA/NUMERIC INDEX

PART NUMBER	AIRLINE STOCK NUMBER	FIG NUMBER	ITEM NUMBER	TOTAL REQ'D
A225400414-744		19H	-070G	001
A225400415-510		19	040A	001
A225400415-512		19B	-040B	001
		19D	-040C	001
		19	-040B	001
A225400415-514		19B	040A	001
A225400415-522		19D	-040B	001
A225400415-556		19A	-040D	001
		19B	-040C	001
		19C	040A	001
A225400415-558		19A	040A	001
		19D	040A	001
A225400415-560		19A	-040B	001
A225400415-562		19A	-040C	001
A225400415-710		19J	080A	001
A225400415-800		19E	-080F	001
A225400415-802		19E	080A	001
		19F	-080C	001
		19H	080A	001
A225400415-812		19E	-080D	001
A225400415-816		19E	-080E	001
A225400415-818		19F	-080F	001
A225400415-820		19E	-080G	001
A225400415-822		19F	-080E	001
A225400415-824		19F	-080D	001
		19H	-080C	001
A225400415-828		19F	-080G	001
A225400415-834		19F	-080J	001
A225400415-836		19H	-080E	001
A225400415-838		19H	-080F	001
A225400415-850		19E	-080B	001
		19F	080A	001
		19H	-080B	001
A225400415-852		19E	-080C	001
A225400415-854		19E	-080H	001

- ITEM NOT ILLUSTRATED

ALPHA/NUMERIC INDEX

PART NUMBER	AIRLINE STOCK NUMBER	FIG NUMBER	ITEM NUMBER	TOTAL REQ'D
		19F	-080B	001
A225400415-868		19F	-080H	001
		19H	-080D	001
A225400420-000		17A	060A	001
		17B	060A	001
		17	060A	001
A225400420-002		17B	-060B	001
A225400420-008		15B	150A	001
		15C	190A	001
		15E	170A	001
		15F	240A	001
		15G	240A	001
		15H	240A	001
		15J	240A	001
		15K	250A	001
		15L	240A	001
		15M	240A	001
		15N	240A	001
		15P	240A	001
		15Q	220A	001
		15R	290A	001
		15T	190A	001
		15U	190A	001
		15	-040B	001
A225400420-010		15C	200A	002
		15D	220A	002
		15E	190A	002
		15F	270A	002
		15G	270A	002
		15H	270A	002
		15J	270A	002
		15K	280A	002
		15L	270A	002
		15M	270A	002
		15N	270A	002

- ITEM NOT ILLUSTRATED

ALPHA/NUMERIC INDEX

PART NUMBER	AIRLINE STOCK NUMBER	FIG NUMBER	ITEM NUMBER	TOTAL REQ'D
		15P	270A	002
		15Q	250A	002
		15R	270A	002
		15S	170A	002
A225400420-012		15D	290A	001
		15S	220A	001
A225400420-014		15D	310A	001
		15S	240A	001
A225400420-020		17G	140A	001
A225400420-206		17B	090A	001
		17	090A	001
A225400420-208		17B	102A	001
A225400420-226		17A	-020B	001
			-060C	001
		17F	100A	001
A225400420-246		17G	130A	001
A225400420-250		15T	370A	002
		15U	370A	002
A225400421-000		17A	020A	001
		17B	020A	001
A225400421-008		17G	100A	001
A225400421-200		17A	-020C	001
		17F	120A	001
A225400421-216		17G	110A	001
A225400422-000		18	060A	001
A225400422-002		18	-060B	001
A225400422-004		18	-060C	001
A225400423-000		17	200A	001
A225400423-002		17A	190A	001
		17B	200A	001
		17F	130A	001
A225400423-208		17B	-200B	001
A225400424-000		18	-010F	001
A225400424-002		18	-010C	001
A225400424-004		18	-010D	001

- ITEM NOT ILLUSTRATED

ALPHA/NUMERIC INDEX

PART NUMBER	AIRLINE STOCK NUMBER	FIG NUMBER	ITEM NUMBER	TOTAL REQ'D
A225400424-008		18	-010E	001
A225400424-200		18	-010B	001
A225400424-202		18	017A	001
A225400424-220		18	015A	001
A225400425-200		22F	130A	001
		22H	130A	001
A225400426-000		16A	080A	001
		16B	080A	001
		16C	070A	001
		16D	070A	001
		16E	080A	001
		16F	070A	001
		16	080A	001
A225400426-002		16A	100A	001
		16	100A	001
		17A	-060B	001
A225400426-012		16B	100A	001
		16C	090A	001
		16D	090A	001
		16E	100A	001
A225400426-200		16A	085A	001
		16B	085A	001
		16C	075A	001
		16D	075A	001
		16E	085A	001
		16F	080A	001
		16	085A	001
A225400426-202		16A	105A	001
		16	115A	001
A225400426-216		16B	105A	001
		16C	095A	001
		16D	095A	001
		16E	105A	001
A225400426-248		16F	100A	001
A225400427-200		16A	020A	001

- ITEM NOT ILLUSTRATED

ALPHA/NUMERIC INDEX

PART NUMBER	AIRLINE STOCK NUMBER	FIG NUMBER	ITEM NUMBER	TOTAL REQ'D
		16B	020A	001
		16C	020A	001
		16D	020A	001
		16E	020A	001
		16F	020A	001
		16	020A	001
A225400427-202		16A	030A	001
		16B	030A	001
		16C	030A	001
		16D	030A	001
		16E	030A	001
		16F	030A	001
		16	030A	001
A225400427-204		16A	090A	001
		16B	090A	001
			110A	001
		16C	080A	001
			100A	001
		16D	080A	001
			100A	001
		16E	090A	001
			110A	001
		16F	090A	001
		16	090A	001
A225400427-206		16A	110A	001
		16	110A	001
A225400428-200		16A	150A	001
		16B	150A	001
		16C	140A	001
		16D	-140B	001
		16E	150A	001
		16F	110A	001
		16	150A	001
A225400429-500		16	010A	001
A225400429-502		16A	-010D	001

- ITEM NOT ILLUSTRATED

ALPHA/NUMERIC INDEX

PART NUMBER	AIRLINE STOCK NUMBER	FIG NUMBER	ITEM NUMBER	TOTAL REQ'D
		16	-010D	001
A225400429-504		16	-010B	001
A225400429-506		16	-010C	001
A225400429-510		16A	-010E	001
		16	-010E	001
A225400429-512		16A	-010B	001
		16B	010A	001
		16	-010F	001
A225400429-514		16	-010G	001
A225400429-516		16	-010H	001
A225400429-522		16	-010J	001
A225400429-524		16A	-010C	001
		16	-010K	001
A225400429-526		16	-010L	001
A225400429-528		16A	010A	001
A225400429-550		16B	-010F	001
A225400429-552		16B	-010D	001
A225400429-554		16B	-010C	001
A225400429-556		16B	-010H	001
A225400429-558		16C	-010B	001
A225400429-560		16C	-010H	001
A225400429-562		16B	-010B	001
		16D	010A	001
		16E	010A	001
A225400429-572		16C	-010E	001
A225400429-574		16C	010A	001
A225400429-576		16B	-010E	001
A225400429-578		16C	-010D	001
		16	-010M	001
A225400429-580		16C	-010F	001
A225400429-582		16C	-010C	001
A225400429-588		16B	-010G	001
A225400429-590		16B	-010J	001
A225400429-598		16D	-010B	001
A225400429-604		16B	-010K	001

- ITEM NOT ILLUSTRATED

ALPHA/NUMERIC INDEX

PART NUMBER	AIRLINE STOCK NUMBER	FIG NUMBER	ITEM NUMBER	TOTAL REQ'D
A225400429-606		16B	-010L	001
A225400429-608		16D	-010C	001
A225400429-610		16D	-010D	001
A225400429-900		16C	-010G	001
A225400429-906		16F	010A	001
A225400429-914		16B	-010M	001
		16E	-010B	001
A225400430-900		17G	010A	001
A225400431-200		16A	160A	001
		16B	160A	001
		16C	150A	001
		16D	150A	001
		16E	160A	001
		16F	120A	001
		16	160A	001
A225400432-204		16A	040A	001
		16B	040A	001
		16	040A	001
		9	070A	001
A225400433-000		18	190A	001
A225400433-200		18	200A	001
A225400433-202		18	220A	001
A225400433-204		18	210A	001
A225400434-550		17C	-040E	001
A225400434-552		17C	-040C	001
A225400434-554		17C	-040B	001
A225400434-556		17C	-040G	001
A225400434-558		17C	-040H	001
		17D	-040D	001
A225400434-560		17D	-040J	001
A225400434-562		17C	040A	001
		17D	-040E	001
A225400434-572		17D	-040C	001
A225400434-574		17C	-040J	001
A225400434-576		17C	-040D	001

- ITEM NOT ILLUSTRATED

ALPHA/NUMERIC INDEX

PART NUMBER	AIRLINE STOCK NUMBER	FIG NUMBER	ITEM NUMBER	TOTAL REQ'D
		17D	-040H	001
A225400434-578		17C	-040M	001
		17D	-040B	001
A225400434-580		17D	-040F	001
A225400434-582		17D	040A	001
A225400434-588		17C	-040F	001
		17E	040A	001
A225400434-590		17C	-040K	001
A225400434-592		17C	-040L	001
A225400434-600		17D	-040G	001
A225400434-608		17D	-040K	001
A225400434-610		17E	-040B	001
A225400434-612		17E	-040C	001
A225400434-614		17E	-040D	001
A225400434-616		17E	-040E	001
A225400434-634		17C	-040N	001
A225400434-704		17G	020A	001
A225400435-000		17A	140A	002
		17B	140A	002
		17F	020A	002
		17	150A	002
A225400436-000		18	270A	001
A225400436-200		18	280A	001
A225400436-202		18	290A	001
A225400437-500		17C	-010E	001
A225400437-502		17C	-010C	001
A225400437-504		17C	-010B	001
A225400437-506		17C	-010G	001
A225400437-508		17D	-010J	001
A225400437-510		17C	010A	001
		17D	-010D	001
A225400437-518		17D	-010C	001
A225400437-520		17C	-010H	001
A225400437-522		17C	-010D	001
A225400437-524		17C	-010L	001

- ITEM NOT ILLUSTRATED

ALPHA/NUMERIC INDEX

PART NUMBER	AIRLINE STOCK NUMBER	FIG NUMBER	ITEM NUMBER	TOTAL REQ'D
		17D	-010B	001
A225400437-526		17C	-010F	001
A225400437-528		17C	-010J	001
		17D	-010K	001
A225400437-530		17D	010A	001
A225400437-532		17C	-010K	001
A225400437-536		17D	-010F	001
A225400437-538		17D	-010G	001
A225400437-540		17E	-010B	001
A225400437-542		17E	-010C	001
A225400437-544		17E	-010D	001
A225400437-546		17E	-010E	001
A225400437-574		17D	-010E	001
A225400437-602		17D	-010H	001
A225400437-604		17E	010A	001
A225400437-914		17C	-010M	001
A225400450-202		06A	160A	002
		06B	160A	002
		06C	190A	002
		06D	190A	002
		06E	190A	002
		06F	190A	002
		06G	190A	002
		06H	190A	002
		06J	200A	002
		06K	200A	002
		06L	200A	002
		06M	200A	002
		06N	200A	002
		06P	200A	002
		06Q	200A	002
		06R	200A	002
		06S	160A	002
		06T	200A	002
		06U	200A	002

- ITEM NOT ILLUSTRATED

ALPHA/NUMERIC INDEX

PART NUMBER	AIRLINE STOCK NUMBER	FIG NUMBER	ITEM NUMBER	TOTAL REQ'D
A225400450-204		06V	200A	002
		06W	220A	002
		06X	200A	002
		06Y	160A	002
		06Z	160A	002
		48A	200A	002
		48B	210A	002
		48C	220A	002
		48D	160A	002
		48E	220A	002
		48F	220A	002
		48G	220A	002
		48H	220A	002
		48J	180A	002
		48K	220A	002
		48L	220A	002
		48M	220A	002
		48N	220A	002
		48	160A	002
		6	150A	002
		06A	130A	001
		06B	130A	001
		06C	160A	001
		06D	160A	001
		06E	160A	001
		06F	160A	001
		06G	160A	001
		06H	160A	001
		06J	170A	001
		06K	170A	001
		06L	170A	001
		06M	170A	001
		06N	170A	001
		06P	170A	001
		06Q	170A	001

- ITEM NOT ILLUSTRATED

ALPHA/NUMERIC INDEX

PART NUMBER	AIRLINE STOCK NUMBER	FIG NUMBER	ITEM NUMBER	TOTAL REQ'D
		06R	170A	001
		06S	130A	001
		06T	170A	001
		06U	170A	001
		06V	170A	001
		06W	190A	001
		06X	170A	001
		06Y	130A	001
		06Z	130A	001
		48A	170A	001
		48B	180A	001
		48C	190A	001
		48D	130A	001
		48E	190A	001
		48F	190A	001
		48G	190A	001
		48H	190A	001
		48J	150A	001
		48K	190A	001
		48L	190A	001
		48M	190A	001
		48N	190A	001
		48	130A	001
		6	120A	001
A225400450-212		07H	260A	002
A225400450-218		07H	270A	001
A225400451-200		06B	200A	002
		07A	160A	001
		07B	150A	001
		07C	140A	001
		07D	150A	001
		07E	130A	001
		07F	160A	001
		07G	140A	001
		07J	150A	001

- ITEM NOT ILLUSTRATED

ALPHA/NUMERIC INDEX

PART NUMBER	AIRLINE STOCK NUMBER	FIG NUMBER	ITEM NUMBER	TOTAL REQ'D
		07K	140A	001
		07L	140A	001
		07M	130A	001
		07N	180A	001
		07P	180A	001
		07Q	180A	001
		07R	180A	001
		07S	170A	001
		07T	170A	001
		07U	170A	001
		07V	180A	001
		07W	180A	001
		07X	180A	001
		07Y	220A	001
		07Z	180A	001
		48D	550A	001
		48E	260A	002
		48F	480A	001
		48N	440A	001
		49A	180A	001
		49B	180A	001
		49C	180A	001
		49	180A	001
		6	180A	002
		7	160A	001
A225400451-202		06A	200A	002
		06B	-200B	002
		06C	230A	002
		06D	230A	002
		06E	230A	002
		06F	230A	002
		06G	230A	002
		06H	230A	002
		06J	240A	002
		06K	240A	002

- ITEM NOT ILLUSTRATED

ALPHA/NUMERIC INDEX

PART NUMBER	AIRLINE STOCK NUMBER	FIG NUMBER	ITEM NUMBER	TOTAL REQ'D
		06L	240A	002
		06M	240A	002
		06N	240A	002
		06P	250A	002
		06Q	250A	002
		06R	240A	002
		06S	190A	002
		06T	240A	002
		06U	240A	002
		06V	240A	002
		06W	260A	002
		06X	240A	002
		06Y	200A	002
		06Z	200A	002
		48A	240A	002
		48B	250A	002
		48C	260A	002
		48D	200A	002
		48F	260A	002
		48G	260A	002
		48H	260A	002
		48J	220A	002
		48K	260A	002
		48L	260A	002
		48M	260A	002
		48N	260A	002
		48	200A	002
A225400453-000		07Y	290A	001
A225400453-202		07Y	300A	001
A225400454-204		21A	220A	001
		21B	220A	001
		21	230A	001
A225400454-206		21A	210A	001
		21B	210A	001
		21	220A	001

- ITEM NOT ILLUSTRATED

ALPHA/NUMERIC INDEX

PART NUMBER	AIRLINE STOCK NUMBER	FIG NUMBER	ITEM NUMBER	TOTAL REQ'D
A225400454-500		21A	140A	001
		21B	140A	001
		21	-140D	001
A225400454-504		21A	-140C	001
		21B	-140B	001
		21	-140F	001
A225400454-512		21A	-140B	001
		21B	-140E	001
		21	-140E	001
A225400454-522		21A	-140D	001
		21B	-140G	001
		21	-140G	001
A225400454-524		21A	-140G	001
		21B	-140F	001
		21	-140K	001
A225400454-530		21A	-140E	001
		21	-140J	001
A225400454-532		21A	-140F	001
		21B	-140C	001
		21	-140H	001
A225400454-534		21A	-140H	001
		21B	-140D	001
A225400454-538		21B	-140J	001
A225400454-540		21B	-140K	001
A225400454-542		21B	-140L	001
A225400454-586		21B	-140H	001
A225400454-594		21B	-140M	001
A225400460-502		12C	-060H	001
		12D	-060E	001
		12E	-090C	001
A225400460-504		12C	-060B	001
		12D	-060J	001
A225400460-512		12C	060A	001
		12E	-090D	001
A225400460-524		12C	-060D	001

- ITEM NOT ILLUSTRATED

ALPHA/NUMERIC INDEX

PART NUMBER	AIRLINE STOCK NUMBER	FIG NUMBER	ITEM NUMBER	TOTAL REQ'D
		12D	-060F	001
		12E	-090F	001
A225400460-526		12C	-060K	001
		12F	090A	001
A225400460-532		12C	-060C	001
A225400460-534		12C	-060F	001
		12E	090A	001
A225400460-536		12C	-060G	001
		12E	-090K	001
A225400460-546		12D	-060B	001
A225400460-552		12D	-060G	001
		12E	-090L	001
A225400460-554		12D	060A	001
		12E	-090E	001
A225400460-556		12C	-060E	001
		12D	-060D	001
		12E	-090H	001
A225400460-558		12E	-090M	001
A225400460-562		12C	-060L	001
		12E	-090G	001
A225400460-564		12D	-060C	001
A225400460-568		12C	-060J	001
		12E	-090B	001
A225400460-578		12D	-060H	001
		12E	-090J	001
A225400460-588		12D	-060K	001
		12G	-090M	001
A225400461-500		12A	-150C	001
		12C	-150D	001
		12D	-150E	001
		12F	180A	001
		12G	-190L	001
		12	070A	001
A225400461-501		12A	-160C	001
		12C	-160D	001

- ITEM NOT ILLUSTRATED

ALPHA/NUMERIC INDEX

PART NUMBER	AIRLINE STOCK NUMBER	FIG NUMBER	ITEM NUMBER	TOTAL REQ'D
		12D	-160E	001
		12F	190A	001
		12G	-200L	001
		12	080A	001
A225400461-502		12A	-150H	001
		12B	-150C	001
		12C	-150E	001
		12D	-150D	001
		12E	-180H	001
		12	-070D	001
A225400461-503		12A	-160H	001
		12B	-160C	001
		12C	-160E	001
		12D	-160D	001
		12E	-190H	001
		12	-080D	001
A225400461-504		12A	-150B	001
		12C	-150H	001
		12E	-180C	001
		12G	-190D	001
A225400461-505		12A	-160B	001
		12C	-160H	001
		12E	-190C	001
		12G	-200D	001
A225400461-506		12A	-150G	001
		12B	-150D	001
		12C	-150B	001
		12D	-150J	001
		12G	190A	001
		12H	-220C	001
		12	-070F	001
A225400461-507		12A	-160G	001
		12B	-160D	001
		12C	-160B	001
		12D	-160J	001

- ITEM NOT ILLUSTRATED

ALPHA/NUMERIC INDEX

PART NUMBER	AIRLINE STOCK NUMBER	FIG NUMBER	ITEM NUMBER	TOTAL REQ'D
		12G	200A	001
		12H	-230C	001
		12	-080F	001
A225400461-508		12A	-150F	001
		12C	-150F	001
		12E	180A	001
		12G	-190B	001
A225400461-509		12A	-160F	001
		12C	-160F	001
		12E	190A	001
		12G	-200B	001
A225400461-510		12B	-150E	001
		12C	-150C	001
		12H	-220B	001
		12	-070C	001
A225400461-511		12B	-160E	001
		12C	-160C	001
		12H	-230B	001
		12	-080C	001
A225400461-514		12A	-150D	001
		12B	-150B	001
		12D	-150F	001
		12E	-180F	001
		12G	-190C	001
		12	-070E	001
A225400461-515		12A	-160D	001
		12B	-160B	001
		12D	-160F	001
		12E	-190F	001
		12G	-200C	001
		12	-080E	001
A225400461-516		12C	-150G	001
		12E	-180K	001
		12G	-190K	001
A225400461-517		12C	-160G	001

- ITEM NOT ILLUSTRATED

ALPHA/NUMERIC INDEX

PART NUMBER	AIRLINE STOCK NUMBER	FIG NUMBER	ITEM NUMBER	TOTAL REQ'D
		12E	-190K	001
		12G	-200K	001
A225400461-518		12A	150A	001
A225400461-519		12A	160A	001
A225400461-522		12B	150A	001
		12D	-150B	001
		12G	-190F	001
A225400461-523		12B	160A	001
		12D	-160B	001
		12G	-200F	001
A225400461-524		12	-070B	001
A225400461-525		12	-080B	001
A225400461-528		12D	-150G	001
		12E	-180L	001
		12G	-190H	001
A225400461-529		12D	-160G	001
		12E	-190L	001
		12G	-200H	001
A225400461-530		12A	-150E	001
		12D	-150C	001
A225400461-531		12A	-160E	001
		12D	-160C	001
A225400461-536		12A	-150J	001
		12C	-150J	001
		12E	-180B	001
		12G	-190E	001
A225400461-537		12A	-160J	001
		12C	-160J	001
		12E	-190B	001
		12G	-200E	001
A225400461-538		12D	150A	001
		12E	-180E	001
A225400461-539		12D	160A	001
		12E	-190E	001
A225400461-540		12C	150A	001

- ITEM NOT ILLUSTRATED

ALPHA/NUMERIC INDEX

PART NUMBER	AIRLINE STOCK NUMBER	FIG NUMBER	ITEM NUMBER	TOTAL REQ'D
		12E	-180D	001
		12H	220A	001
A225400461-541		12C	160A	001
		12E	-190D	001
		12H	230A	001
A225400461-544		12C	-150K	001
		12E	-180G	001
		12G	-190G	001
A225400461-545		12C	-160K	001
		12E	-190G	001
		12G	-200G	001
A225400461-554		12D	-150H	001
		12E	-180J	001
		12G	-190J	001
A225400461-555		12D	-160H	001
		12E	-190J	001
		12G	-200J	001
A225400461-564		12J	210A	001
A225400461-565		12J	220A	001
A225400461-566		12H	-220D	001
A225400461-567		12H	-230D	001
A225400461-568		12H	-220E	001
A225400461-569		12H	-230E	001
A225400461-570		12H	-220F	001
A225400461-571		12H	-230F	001
A225400461-930		12D	-150K	001
		12G	-190M	001
A225400461-931		12D	-160K	001
		12G	-200M	001
A225400465-900		12D	-010K	001
		12G	-010M	001
A225400466-602		48B	-320B	001
		48K	-330B	001
A225400470-000		07G	-130B	001
		07N	-170B	001

- ITEM NOT ILLUSTRATED

ALPHA/NUMERIC INDEX

PART NUMBER	AIRLINE STOCK NUMBER	FIG NUMBER	ITEM NUMBER	TOTAL REQ'D
		07R	-170B	001
		07S	-160B	001
		07T	-160B	001
		07W	-170B	001
		49B	-170B	001
A225400470-008		48D	450A	001
		48F	450A	001
		48N	370A	001
A225400470-108		48D	470A	001
		48F	470A	001
		48N	390A	001
A225400470-200		07S	163A	001
		07T	163A	001
		07W	173A	001
		49B	173A	001
A225400470-208		48D	460A	001
		48F	460A	001
		48N	380A	001
A225400493-502		19K	070A	001
A225400494-600		19K	080A	001
A225400500-200		07A	240A	001
		07B	280A	001
		07C	190A	001
		07D	190A	001
		07E	170A	001
		07F	200A	001
		07G	180A	001
		07H	160A	001
		07J	190A	001
		07K	180A	001
		07L	180A	001
		07M	170A	001
		07N	220A	001
		07P	220A	001
		07Q	220A	001

- ITEM NOT ILLUSTRATED

ALPHA/NUMERIC INDEX

PART NUMBER	AIRLINE STOCK NUMBER	FIG NUMBER	ITEM NUMBER	TOTAL REQ'D
A225400500-202		07R	220A	001
		07S	210A	001
		07T	210A	001
		07U	210A	001
		07V	220A	001
		07W	220A	001
		07X	220A	001
		07Y	250A	001
		07Z	220A	001
		49A	220A	001
		49B	220A	001
		49C	220A	001
		49	220A	001
		7	200A	001
		07A	250A	001
		07B	290A	001
		07C	200A	001
		07D	200A	001
		07E	180A	001
		07F	210A	001
		07G	190A	001
		07H	170A	001
		07J	200A	001
		07K	190A	001
		07L	190A	001
		07M	180A	001
		07N	230A	001
		07P	230A	001
		07Q	230A	001
		07R	230A	001
		07S	220A	001
		07T	220A	001
		07U	220A	001
		07V	230A	001
		07W	230A	001

- ITEM NOT ILLUSTRATED

ALPHA/NUMERIC INDEX

PART NUMBER	AIRLINE STOCK NUMBER	FIG NUMBER	ITEM NUMBER	TOTAL REQ'D
		07X	230A	001
		07Y	260A	001
		07Z	230A	001
		49A	230A	001
		49B	230A	001
		49C	230A	001
		49	230A	001
		7	210A	001
A225400500-204		07C	-200B	001
		07E	-180B	001
		07T	-220B	001
		07W	360A	001
		49B	300A	001
		49C	290A	001
A225401201-512		13	010A	001
A225401201-514		13	-010C	001
A225401201-516		13	-010E	001
A225401201-518		13	-010F	001
A225401201-520		13	-010D	001
A225401201-522		13	-010B	001
A225401201-524		13A	010A	001
A225401201-530		13A	-010D	001
A225401201-532		13	-010H	001
A225401201-534		13	-010G	001
A225401201-538		13	-010K	001
A225401201-540		13A	-010E	001
A225401201-542		13A	-010F	001
A225401201-544		13	-010L	001
A225401201-546		13A	-010G	001
A225401201-554		13	-010P	001
A225401201-600		13B	-010E	001
		13F	010A	001
A225401201-602		13B	010A	001
A225401201-604		13B	-010L	001
A225401201-606		13B	-010C	001

- ITEM NOT ILLUSTRATED

ALPHA/NUMERIC INDEX

PART NUMBER	AIRLINE STOCK NUMBER	FIG NUMBER	ITEM NUMBER	TOTAL REQ'D
A225401201-608		13B	-010B	001
A225401201-610		13A	-010B	001
A225401201-612		13C	-010C	001
		13H	-010B	001
A225401201-614		13B	-010F	001
A225401201-616		13B	-010D	001
A225401201-618		13C	-010H	001
		13H	-010E	001
A225401201-620		13B	-010H	001
		13H	-010L	001
A225401201-624		13B	-010K	001
A225401201-628		13B	-010J	001
A225401201-630		13C	-010L	001
		13H	-010K	001
A225401201-634		13C	-010B	001
A225401201-636		13C	010A	001
A225401201-638		13C	-010D	001
		13H	-010F	001
A225401201-640		13D	-010K	001
A225401201-646		13C	-010G	001
A225401201-648		13C	-010F	001
		13H	010A	001
A225401201-650		13B	-010G	001
A225401201-652		13C	-010K	001
A225401201-654		13C	-010J	001
A225401201-656		13C	-010M	001
A225401201-658		13D	-010B	001
		13H	-010D	001
A225401201-660		13D	-010C	001
A225401201-662		13D	-010D	001
A225401201-664		13A	-010C	001
A225401201-666		13D	010A	001
		13H	-010H	001
A225401201-668		13C	-010E	001
A225401201-670		13D	-010F	001

- ITEM NOT ILLUSTRATED

ALPHA/NUMERIC INDEX

PART NUMBER	AIRLINE STOCK NUMBER	FIG NUMBER	ITEM NUMBER	TOTAL REQ'D
A225401201-672		13D	-010G	001
A225401201-674		13D	-010J	001
A225401201-678		13D	-010E	001
A225401201-680		13D	-010H	001
A225401201-682		13E	-010C	001
		13H	-010C	001
A225401201-684		13E	-010D	001
A225401201-686		13E	-010B	001
A225401201-688		13E	-010E	001
A225401201-690		13E	-010F	001
A225401201-692		13E	-010G	001
A225401201-694		13E	-010H	001
A225401201-698		13E	-010K	001
		13H	-010J	001
A225401201-700		13E	010A	001
A225401201-702		13E	-010L	001
A225401201-704		13G	-010E	001
A225401201-710		13G	-010B	001
A225401201-712		13G	010A	001
A225401201-714		13H	-010G	001
A225401201-716		13H	-010M	001
A225401201-718		13G	-010C	001
A225401201-720		13J	010A	001
A225401201-724		13G	-010G	001
A225401201-728		13G	-010D	001
A225401201-730		13D	-010N	001
A225401201-732		13G	-010F	001
A225401201-736		13D	-010M	001
		13H	-010N	001
		13K	-010M	001
A225401201-740		13A	-010H	001
		13C	-010N	001
		13E	-010M	001
		13G	-010H	001
		13H	-010P	001

- ITEM NOT ILLUSTRATED

ALPHA/NUMERIC INDEX

PART NUMBER	AIRLINE STOCK NUMBER	FIG NUMBER	ITEM NUMBER	TOTAL REQ'D
A225401201-742		13	-010Q	001
A225401201-800		13E	-010J	001
A225401202-500		13	-010M	001
A225401202-508		13B	-010M	001
A225401202-514		13V	-010G	001
A225401202-518		13V	-010B	001
		13	-010N	001
A225401202-522		13V	-010H	001
A225401202-536		13	-010J	001
A225401202-538		13V	010A	001
A225401202-602		13V	-010C	001
A225401202-604		13V	-010L	001
A225401202-608		13V	-010M	001
A225401202-610		13V	-010K	001
A225401202-612		13L	-010J	001
		13V	-010D	001
A225401202-618		13L	-010C	001
A225401202-620		13J	-010E	001
A225401202-624		13V	-010E	001
A225401202-630		13K	-010C	001
A225401202-636		13V	-010F	001
A225401202-638		13J	-010L	001
A225401202-648		13J	-010D	001
A225401202-666		13J	-010K	001
A225401202-668		13K	-010H	001
A225401202-672		13J	-010G	001
A225401202-680		13D	-010L	001
		13J	-010M	001
A225401202-684		13J	-010J	001
A225401202-692		13L	-010L	001
A225401202-694		13V	-010J	001
A225401202-698		13J	-010F	001
A225401202-702		13K	-010K	001
A225401202-704		13L	-010E	001
A225401202-710		13L	-010B	001

- ITEM NOT ILLUSTRATED

ALPHA/NUMERIC INDEX

PART NUMBER	AIRLINE STOCK NUMBER	FIG NUMBER	ITEM NUMBER	TOTAL REQ'D
A225401202-712		13K	-010B	001
A225401202-714		13K	-010E	001
			010A	001
A225401202-716		13J	-010C	001
A225401202-720		13M	-010E	001
A225401202-724		13K	-010J	001
A225401202-728		13K	-010F	001
A225401202-732		13J	-010H	001
A225401202-738		13K	-010D	001
A225401202-742		13K	-010G	001
A225401202-756		13M	-010D	001
A225401202-768		13L	-010F	001
A225401202-770		13K	-010L	001
A225401202-772		13L	-010H	001
A225401202-774		13L	-010D	001
A225401202-776		13L	010A	001
A225401202-778		13L	-010M	001
A225401202-780		13M	-010B	001
A225401202-782		13M	010A	001
A225401202-784		13M	-010C	001
A225401202-786		13L	-010K	001
A225401202-790		13J	-010P	001
A225401202-800		13J	-010B	001
A225401202-802		13L	-010G	001
A225401202-900		13J	-010N	001
A225401205-598		13W	010A	001
A225401207-000		13W	080A	001
A225401207-134		13U	060A	001
A225401207-500		13N	030A	001
		13P	050A	001
		13Q	050A	001
		13R	030A	001
		13S	050A	001
		13T	040A	001
		13W	080B	001

- ITEM NOT ILLUSTRATED

ALPHA/NUMERIC INDEX

PART NUMBER	AIRLINE STOCK NUMBER	FIG NUMBER	ITEM NUMBER	TOTAL REQ'D
A225401207-510		13P	-050B	001
A225401208-500		13W	020A	001
A225401209-000		13N	013A	001
		13P	020A	001
		13Q	020A	001
		13R	010A	001
		13S	020A	001
		13T	-020C	001
A225401209-002		13T	020A	001
A225401209-004		13P	-020E	001
		13T	-020B	001
A225401209-006		13Q	-020D	001
A225401209-008		13Q	-020B	001
A225401209-010		13P	-020C	001
A225401209-012		13P	-020D	001
A225401209-014		13Q	-020C	001
A225401209-016		13P	-020B	001
		13S	-020B	001
A225401209-018		13S	-020C	001
A225401209-058		13W	-020B	001
A225401209-500		13N	-010G	001
A225401209-502		13N	-010H	001
A225401209-504		13N	-010J	001
A225401209-506		13N	-010F	001
A225401209-508		13N	-010K	001
A225401209-510		13N	-010M	001
A225401209-512		13N	-010L	001
A225401209-514		13P	010A	001
A225401209-516		13N	010A	001
A225401209-518		13N	-010C	001
A225401209-520		13S	010A	001
A225401209-522		13N	-010D	001
A225401209-524		13N	-010B	001
A225401209-526		13P	-010B	001
A225401209-528		13P	-010F	001

- ITEM NOT ILLUSTRATED

ALPHA/NUMERIC INDEX

PART NUMBER	AIRLINE STOCK NUMBER	FIG NUMBER	ITEM NUMBER	TOTAL REQ'D
A225401209-530		13P	-010C	001
A225401209-532		13P	-010E	001
A225401209-534		13N	-010E	001
A225401209-536		13P	-010G	001
A225401209-540		13Q	-010B	001
A225401209-542		13P	-010H	001
A225401209-544		13P	-010J	001
A225401209-546		13P	-010K	001
A225401209-548		13Q	-010C	001
A225401209-550		13P	-010D	001
A225401209-552		13Q	010A	001
A225401209-554		13Q	-010D	001
A225401209-556		13Q	-010F	001
A225401209-558		13Q	-010J	001
A225401209-560		13Q	-010E	001
A225401209-562		13Q	-010G	001
A225401209-564		13Q	-010K	001
A225401209-566		13S	-010B	001
A225401209-568		13Q	-010L	001
A225401209-570		13Q	-010H	001
A225401209-572		13S	-010E	001
A225401209-574		13S	-010D	001
A225401209-576		13S	-010C	001
A225401209-580		13S	-010F	001
A225401209-582		13S	-010G	001
A225401209-584		13S	-010H	001
A225401209-586		13S	-010J	001
A225401209-588		13S	-010K	001
A225401209-590		13S	-010M	001
A225401209-592		13S	-010L	001
A225401209-626		13P	-010L	001
A225401209-642		13N	-010N	001
A225401209-646		13N	-010P	001
		13P	-010N	001
		13Q	-010N	001

- ITEM NOT ILLUSTRATED

ALPHA/NUMERIC INDEX

PART NUMBER	AIRLINE STOCK NUMBER	FIG NUMBER	ITEM NUMBER	TOTAL REQ'D
A225401209-828		13W	-010B	001
A225401209-906		13U	020A	001
A225401209-938		13P	-010M	001
A225401213-200		07A	053A	001
		07B	053A	001
		07F	060A	001
A225401213-202		07A	055A	001
		07B	055A	001
		07F	070A	001
A225401222-500		06A	210A	001
		06B	210A	001
		06C	-240B	001
		06D	240A	001
		06E	240A	001
		06F	-240D	001
		06G	-240B	001
		06H	240A	001
		06J	250A	001
		06K	-250D	001
		06L	250A	001
		06M	-250C	001
		06N	-250D	001
		06P	-260B	001
		06Q	-260E	001
		06T	250A	001
		06U	250A	001
		06V	250A	001
		06W	-270B	001
		06X	-250B	001
		06Y	210A	001
		06Z	-210B	001
		48A	-250J	001
		48B	260A	001
		48C	-270B	001
		48D	210A	001

- ITEM NOT ILLUSTRATED

ALPHA/NUMERIC INDEX

PART NUMBER	AIRLINE STOCK NUMBER	FIG NUMBER	ITEM NUMBER	TOTAL REQ'D
A225401222-502		48E	-270B	001
		48F	-270C	001
		48G	-270C	001
		48J	-230E	001
		48	-210D	001
		6	-190C	001
		06A	-210B	001
		06C	-240D	001
		06D	-240B	001
		06E	-240B	001
		06F	-240C	001
		06G	240A	001
		06H	-240B	001
		06J	-250B	001
		06K	-250C	001
		06L	-250C	001
		06M	250A	001
		06N	-250C	001
		06P	260A	001
		06Q	-260B	001
		06T	-250C	001
		06U	-250C	001
		06V	-250D	001
		06W	-270C	001
		06X	250A	001
		06Y	-210C	001
		06Z	210A	001
		48A	250A	001
		48B	-260D	001
		48C	-270C	001
		48D	-210G	001
		48	210A	001
		6	-190D	001
A225401222-504		06B	-210C	001
		48E	270A	001

- ITEM NOT ILLUSTRATED

ALPHA/NUMERIC INDEX

PART NUMBER	AIRLINE STOCK NUMBER	FIG NUMBER	ITEM NUMBER	TOTAL REQ'D
		48J	-230D	001
		6	-190E	001
A225401222-506		06C	-240E	001
		06D	-240D	001
		06F	-240B	001
		06J	-250F	001
		06K	-250H	001
		06M	-250F	001
		06N	-250H	001
		06P	-260D	001
		06W	270A	001
		48	-210B	001
		6	-190B	001
A225401222-508		06B	-210B	001
		06F	-240F	001
		06G	-240C	001
		06N	-250E	001
		06S	200A	001
		6	190A	001
A225401222-510		48E	-270C	001
A225401222-512		06B	-210D	001
A225401222-514		06B	-210E	001
		06F	240A	001
		06T	-250D	001
A225401222-516		06C	240A	001
A225401222-518		06C	-240C	001
A225401222-520		06A	-210C	001
		06K	-250F	001
		48E	-270D	001
A225401222-522		06D	-240C	001
		06H	-240C	001
		06N	250A	001
		48	-210E	001
A225401222-524		06D	-240E	001
		06E	-240C	001

- ITEM NOT ILLUSTRATED

ALPHA/NUMERIC INDEX

PART NUMBER	AIRLINE STOCK NUMBER	FIG NUMBER	ITEM NUMBER	TOTAL REQ'D
		06F	-240E	001
		06M	-250D	001
		06V	-250B	001
A225401222-526		06D	-240F	001
		06F	-240H	001
		06K	250A	001
		06Q	260A	001
		06T	-250B	001
		06Z	-210E	001
		48C	270A	001
A225401222-528		06H	-240E	001
		06K	-250G	001
		06P	-260C	001
		06U	-250D	001
		06Y	-210G	001
A225401222-530		06F	-240G	001
		06K	-250E	001
		06Q	-260C	001
		06U	-250F	001
		06Y	-210F	001
A225401222-532		06G	-240D	001
		06H	-240D	001
		06N	-250B	001
A225401222-534		06K	-250B	001
		06T	-250E	001
		06Y	-210B	001
		48B	-260B	001
A225401222-536		06J	-250C	001
		06M	-250B	001
A225401222-538		06J	-250E	001
		06L	-250B	001
		06N	-250G	001
		06V	-250C	001
		06Y	-210E	001
A225401222-540		06J	-250D	001

- ITEM NOT ILLUSTRATED

ALPHA/NUMERIC INDEX

PART NUMBER	AIRLINE STOCK NUMBER	FIG NUMBER	ITEM NUMBER	TOTAL REQ'D
		06L	-250D	001
		06V	-250E	001
		48G	-270E	001
A225401222-542		06M	-250E	001
		06U	-250E	001
		48C	-270F	001
A225401222-544		06N	-250F	001
		06Q	-260D	001
		06R	250A	001
		48H	-270B	001
A225401222-546		06Q	-260F	001
		06W	-270E	001
		06Z	-210F	001
A225401222-548		06Q	-260G	001
A225401222-550		06U	-250B	001
		06W	-270D	001
		06X	-250D	001
		06Y	-210D	001
		06Z	-210C	001
		48	-210C	001
A225401222-552		06X	-250C	001
		48D	-210B	001
A225401222-554		48B	-260C	001
A225401222-556		48B	-260F	001
A225401222-558		48B	-260E	001
A225401222-560		48C	-270D	001
A225401222-562		48C	-270E	001
A225401222-564		06Z	-210D	001
A225401222-568		06P	-260E	001
		06X	-250E	001
		48	-210F	001
A225401222-600		48A	-250B	001
		48C	-270G	001
		48D	-210C	001
		48H	-270E	001

- ITEM NOT ILLUSTRATED

ALPHA/NUMERIC INDEX

PART NUMBER	AIRLINE STOCK NUMBER	FIG NUMBER	ITEM NUMBER	TOTAL REQ'D
		48J	230A	001
		48K	-270B	001
		48L	-270B	001
		48M	-270D	001
A225401222-602		48G	-270D	001
A225401222-604		48A	-250C	001
		48D	-210D	001
		48G	270A	001
		48H	270A	001
		48J	-230B	001
		48K	-270C	001
		48L	-270C	001
		48M	-270F	001
A225401222-606		48D	-210E	001
A225401222-608		48F	-270B	001
		48G	-270F	001
A225401222-610		48G	-270B	001
		48J	-230C	001
		48M	-270C	001
A225401222-612		48A	-250F	001
		48D	-210F	001
		48F	270A	001
		48L	-270H	001
		48M	-270G	001
A225401222-614		48G	-270H	001
A225401222-616		48G	-270J	001
A225401222-618		48G	-270G	001
		48L	-270J	001
A225401222-622		48A	-250D	001
A225401222-624		48L	-270F	001
A225401222-626		48A	-250G	001
		48K	-270D	001
		48L	270A	001
		48M	270A	001
A225401222-628		48H	-270D	001

- ITEM NOT ILLUSTRATED

ALPHA/NUMERIC INDEX

PART NUMBER	AIRLINE STOCK NUMBER	FIG NUMBER	ITEM NUMBER	TOTAL REQ'D
A225401222-630		48H	-270F	001
		48L	-270G	001
A225401222-632		48K	270A	001
A225401222-634		48H	-270G	001
		48L	-270D	001
A225401222-636		48L	-270E	001
A225401222-638		48A	-250E	001
A225401222-640		48A	-250H	001
A225401222-642		48M	-270B	001
A225401222-644		48M	-270E	001
A225401222-656		48H	-270C	001
A225401222-812		48N	270A	001
A225401222-902		48B	-260G	001
A225401222-904		48K	-270E	001
A225401222-906		06U	-250G	001
A225401231-500		6	010A	001
A225401231-502		06D	-010B	001
		06F	-010C	001
		06K	-010C	001
		6	-010D	001
A225401231-504		06D	-010D	001
		06F	-010B	001
		06J	-010M	001
		6	-010B	001
A225401231-506		6	-010C	001
A225401231-508		06A	-010E	001
		6	-010E	001
A225401231-510		06B	010A	001
		6	-010F	001
A225401231-512		6	-010G	001
A225401231-514		6	-010H	001
A225401231-516		06B	-010H	001
		6	-010J	001
A225401231-518		6	-010K	001
A225401231-520		6	-010L	001

- ITEM NOT ILLUSTRATED

ALPHA/NUMERIC INDEX

PART NUMBER	AIRLINE STOCK NUMBER	FIG NUMBER	ITEM NUMBER	TOTAL REQ'D
A225401231-522		06B	-010B	001
		06G	-010C	001
A225401231-524		06A	-010F	001
		06B	-010D	001
A225401231-526		06A	010A	001
A225401231-528		06B	-010C	001
A225401231-532		06B	-010F	001
		06F	-010H	001
A225401231-534		06B	-010J	001
A225401231-538		6	-010M	001
A225401231-542		06B	-010E	001
		06F	010A	001
A225401231-544		06A	-010D	001
		06C	-010B	001
		06E	-010H	001
A225401231-546		06C	010A	001
A225401231-548		06C	-010D	001
A225401231-550		06C	-010C	001
A225401231-552		06A	-010C	001
		06E	-010J	001
A225401231-554		06C	-010E	001
A225401231-558		06F	-010E	001
A225401231-560		06C	-010F	001
A225401231-562		06C	-010G	001
		06J	-010L	001
A225401231-566		06K	-010K	001
A225401231-568		06A	-010H	001
A225401231-574		06C	-010H	001
		06F	-010L	001
		06H	-010B	001
A225401231-576		06D	010A	001
		06G	-010B	001
A225401231-578		06D	-010C	001
A225401231-580		06C	-010J	001
		06E	-010M	001

- ITEM NOT ILLUSTRATED

ALPHA/NUMERIC INDEX

PART NUMBER	AIRLINE STOCK NUMBER	FIG NUMBER	ITEM NUMBER	TOTAL REQ'D
		06J	-010B	001
A225401231-582		06D	-010E	001
		06F	-010J	001
		06J	010A	001
A225401231-584		06D	-010F	001
A225401231-586		06E	-010B	001
A225401231-588		06D	-010G	001
		06F	-010F	001
A225401231-592		06D	-010K	001
		06T	-010G	001
A225401231-594		06D	-010J	001
		06J	-010K	001
A225401231-596		06D	-010H	001
		06F	-010D	001
		06K	010A	001
A225401231-598		06H	-010H	001
A225401231-600		06C	-010K	001
A225401231-602		06E	-010C	001
A225401231-604		06C	-010L	001
A225401231-608		06E	-010E	001
		06J	-010D	001
A225401231-610		06B	-010G	001
		06E	-010D	001
A225401231-612		06E	-010G	001
A225401231-614		06E	-010K	001
		06G	010A	001
A225401231-616		06E	-010F	001
A225401231-618		06F	-010G	001
		06J	-010N	001
A225401231-620		06E	-010L	001
		06J	-010H	001
A225401231-624		06F	-010M	001
		06H	-010C	001
A225401231-626		06G	-010D	001
A225401231-628		06G	-010F	001

- ITEM NOT ILLUSTRATED

ALPHA/NUMERIC INDEX

PART NUMBER	AIRLINE STOCK NUMBER	FIG NUMBER	ITEM NUMBER	TOTAL REQ'D
A225401231-630		06H	010A	001
A225401231-632		06H	-010K	001
A225401231-634		06G	-010H	001
A225401231-636		06G	-010G	001
A225401231-638		06H	-010D	001
A225401231-640		06H	-010E	001
A225401231-642		06J	-010C	001
		06L	010A	001
A225401231-644		06G	-010J	001
A225401231-646		06G	-010E	001
A225401231-648		06H	-010G	001
A225401231-650		06H	-010F	001
A225401231-652		06K	-010B	001
A225401231-658		06P	-010M	001
A225401231-660		06J	-010F	001
A225401231-662		06J	-010J	001
A225401231-664		06J	-010G	001
A225401231-674		48D	-010M	001
A225401231-676		06J	-010P	001
A225401231-678		06L	-010N	001
A2254012318506		48J	-010L	001
A2254012318512		48J	-010K	001
A2254012318526		06A	-010J	001
		06B	-010M	001
		48E	-010D	001
A2254012318532		06B	-010L	001
A2254012318538		48E	-010C	001
A2254012318540		06B	-010K	001
A2254012318546		06C	-010M	001
A2254012318572		06A	-010B	001
A2254012318586		06E	-010N	001
A2254012318602		48E	-010F	001
A2254012318606		06E	010A	001
A2254012318622		06F	-010K	001
A2254012318630		06H	-010J	001

- ITEM NOT ILLUSTRATED

ALPHA/NUMERIC INDEX

PART NUMBER	AIRLINE STOCK NUMBER	FIG NUMBER	ITEM NUMBER	TOTAL REQ'D
		48E	-010G	001
A225401233-500		06K	-010D	001
A225401233-502		06L	-010J	001
A225401233-504		06K	-010J	001
A225401233-508		06H	-010M	001
		06L	-010B	001
		06M	-010D	001
A225401233-510		06K	-010M	001
		06N	-010K	001
A225401233-512		06P	-010G	001
A225401233-514		06K	-010E	001
A225401233-516		06M	-010F	001
		06N	-010C	001
A225401233-518		06L	-010H	001
		06P	010A	001
A225401233-520		06H	-010L	001
		06M	-010E	001
A225401233-524		06K	-010F	001
		06P	-010E	001
A225401233-526		06K	-010L	001
A225401233-528		06L	-010K	001
A225401233-530		06L	-010E	001
		06N	-010H	001
A225401233-532		06N	-010J	001
A225401233-534		06N	010A	001
A225401233-536		06M	-010K	001
		06N	-010M	001
A225401233-538		06L	-010F	001
A225401233-540		06K	-010H	001
A225401233-542		06L	-010D	001
		06T	-010C	001
A225401233-544		06L	-010G	001
A225401233-546		06L	-010L	001
		06Q	-010E	001
A225401233-548		06M	010A	001

- ITEM NOT ILLUSTRATED

ALPHA/NUMERIC INDEX

PART NUMBER	AIRLINE STOCK NUMBER	FIG NUMBER	ITEM NUMBER	TOTAL REQ'D
A225401233-550		06M	-010L	001
A225401233-554		06L	-010M	001
A225401233-556		06M	-010C	001
		06U	-010D	001
A225401233-558		06M	-010M	001
A225401233-560		06M	-010G	001
A225401233-562		06N	-010B	001
A225401233-564		06M	-010H	001
A225401233-566		06N	-010D	001
A225401233-568		06N	-010G	001
A225401233-570		06N	-010E	001
A225401233-572		06N	-010F	001
A225401233-574		06N	-010L	001
		06V	-010B	001
A225401233-576		06P	-010C	001
A225401233-578		06P	-010B	001
A225401233-580		06M	-010J	001
A225401233-582		06P	-010D	001
		06Q	-010K	001
A225401233-584		06P	-010F	001
A225401233-586		06P	-010H	001
A225401233-588		06P	-010K	001
A225401233-590		06P	-010J	001
A225401233-592		06P	-010L	001
A225401233-594		06Q	-010B	001
A225401233-596		06Q	010A	001
A225401233-598		06Q	-010D	001
A225401233-602		06Q	-010F	001
A225401233-604		06Q	-010G	001
A225401233-606		06R	010A	001
A225401233-608		06Q	-010H	001
A225401233-610		06S	010A	001
A225401233-612		06U	-010E	001
A225401233-614		06Q	-010J	001
A225401233-620		06T	010A	001

- ITEM NOT ILLUSTRATED

ALPHA/NUMERIC INDEX

PART NUMBER	AIRLINE STOCK NUMBER	FIG NUMBER	ITEM NUMBER	TOTAL REQ'D
A225401233-622		06T	-010B	001
A225401233-626		06T	-010H	001
A225401233-628		06T	-010F	001
A225401233-630		06T	-010E	001
A225401233-632		06T	-010D	001
A225401233-634		06V	010A	001
A225401233-638		06U	-010B	001
A225401233-640		06U	-010C	001
A225401233-642		06V	-010C	001
A225401233-644		06T	-010K	001
A225401233-646		06T	-010J	001
A225401233-652		06P	-010N	001
A225401233-660		06T	-010N	001
A225401233-662		06U	-010P	001
A225401233-664		06P	-010P	001
A2254012338506		06K	-010G	001
A2254012338522		48E	-010E	001
A2254012338574		06L	-010C	001
		06N	-010N	001
A2254012338600		06Q	-010C	001
A2254012338616		06Q	-010M	001
A2254012338624		6	-010Q	001
A2254012338636		06U	010A	001
A225401234-502		06R	-010C	001
A225401234-504		06W	010A	001
A225401234-506		06U	-010F	001
A225401234-510		06U	-010G	001
A225401234-512		06V	-010E	001
A225401234-514		06V	-010D	001
A225401234-516		06U	-010L	001
A225401234-518		06V	-010F	001
A225401234-520		06V	-010H	001
A225401234-522		06U	-010M	001
A225401234-524		06U	-010H	001
A225401234-526		06X	010E	001

- ITEM NOT ILLUSTRATED

ALPHA/NUMERIC INDEX

PART NUMBER	AIRLINE STOCK NUMBER	FIG NUMBER	ITEM NUMBER	TOTAL REQ'D
A225401234-528		06W	-010J	001
A225401234-530		06U	-010K	001
A225401234-532		06W	-010H	001
A225401234-534		06X	-010B	001
		06Y	-010C	001
A225401234-536		06X	-010D	001
A225401234-538		06X	-010C	001
A225401234-540		06R	-010B	001
A225401234-542		06V	-010G	001
A225401234-544		06W	-010K	001
A225401234-546		06X	010A	001
A225401234-548		06W	-010L	001
A225401234-552		06W	-010C	001
A225401234-554		06W	-010F	001
A225401234-556		06W	-010B	001
A225401234-558		06X	-010H	001
A225401234-560		06X	-010F	001
A225401234-562		06W	-010E	001
A225401234-564		06V	-010J	001
A225401234-566		06W	-010G	001
A225401234-568		06Y	010A	001
A225401234-570		06X	-010K	001
A225401234-572		06X	010L	001
A225401234-574		06X	-010G	001
A225401234-576		06X	-010J	001
A225401234-578		06X	-010M	001
A225401234-580		06Y	-010B	001
A225401234-582		06Y	-010D	001
A225401234-584		06Y	-010F	001
A225401234-588		06Y	-010H	001
A225401234-594		06V	-010K	001
A225401234-596		06U	-010N	001
A225401234-600		48A	-010B	001
A225401234-602		48G	-010C	001
A225401234-610		48G	-010B	001

- ITEM NOT ILLUSTRATED

ALPHA/NUMERIC INDEX

PART NUMBER	AIRLINE STOCK NUMBER	FIG NUMBER	ITEM NUMBER	TOTAL REQ'D
A225401234-612		48A	-010C	001
A225401234-614		48A	-010D	001
A225401234-616		48A	-010E	001
A225401234-620		48K	-010J	001
A225401234-622		48L	-010E	001
A225401234-624		48J	-010E	001
A225401234-626		48J	-010F	001
A225401234-628		48A	-010G	001
A225401234-630		48A	-010H	001
A225401234-632		48A	-010F	001
A225401234-634		48J	-010G	001
A225401234-636		48A	-010J	001
		48M	-010L	001
A225401234-638		48A	-010K	001
		48M	-010D	001
A225401234-640		48A	-010L	001
A225401234-642		48M	010A	001
A225401234-644		48M	-010C	001
A225401234-646		48M	-010B	001
A225401234-648		48M	-010J	001
A225401234-650		48M	-010E	001
A225401234-652		48M	-010F	001
A225401234-654		48J	-010H	001
A225401234-656		48M	-010G	001
A225401234-658		48J	-010J	001
A225401234-672		48M	-010K	001
A225401234-758		06Z	-010E	001
A225401234-774		06X	-010P	001
A2254012348508		06U	-010J	001
A2254012348534		06Y	-010P	001
A2254012348542		06V	-010L	001
A2254012348550		06W	-010D	001
A2254012348556		06T	-010L	001
A2254012348560		06X	-010N	001
		48A	-010M	001

- ITEM NOT ILLUSTRATED

ALPHA/NUMERIC INDEX

PART NUMBER	AIRLINE STOCK NUMBER	FIG NUMBER	ITEM NUMBER	TOTAL REQ'D
A2254012348574		48F	-010C	001
A225401235-500		06Y	-010E	001
		48B	010A	001
A225401235-502		06Y	-010J	001
A225401235-506		06Y	-010N	001
		48D	-010B	001
A225401235-508		06Y	-010M	001
A225401235-510		06Y	-010K	001
A225401235-512		06Z	010A	001
A225401235-514		06Y	-010G	001
		48	-010F	001
A225401235-516		06Z	-010C	001
A225401235-518		06R	-010D	001
A225401235-520		48	-010B	001
A225401235-522		06Z	-010B	001
A225401235-524		48	-010C	001
A225401235-526		48	010A	001
A225401235-530		06Z	-010D	001
A225401235-532		06Z	-010F	001
		48B	-010B	001
		48C	010A	001
A225401235-534		48	-010D	001
A225401235-536		06Z	-010G	001
A225401235-538		06Z	-010H	001
A225401235-540		48	-010E	001
A225401235-542		06Z	-010J	001
A225401235-544		48	-010G	001
A225401235-546		06Z	-010K	001
A225401235-548		06R	-010E	001
A225401235-550		48B	-010C	001
A225401235-552		48	-010H	001
A225401235-554		48B	-010D	001
A225401235-556		48C	-010B	001
A225401235-558		48B	-010F	001
A225401235-560		48B	-010G	001

- ITEM NOT ILLUSTRATED

ALPHA/NUMERIC INDEX

PART NUMBER	AIRLINE STOCK NUMBER	FIG NUMBER	ITEM NUMBER	TOTAL REQ'D
A225401235-562		48B	-010K	001
A225401235-564		48B	-010E	001
A225401235-566		48B	-010L	001
A225401235-568		48B	-010J	001
A225401235-570		48B	-010H	001
A225401235-572		48C	-010D	001
A225401235-574		48	-010K	001
A225401235-578		48C	-010K	001
A225401235-580		48C	-010C	001
A225401235-584		48C	-010F	001
A225401235-586		48C	-010E	001
A225401235-588		48D	-010C	001
A225401235-590		48C	-010H	001
A225401235-594		48C	-010J	001
A225401235-596		48G	-010E	001
A225401235-598		48	-010L	001
A225401235-600		48K	-010L	001
A225401235-602		48	-010J	001
A225401235-604		48C	-010L	001
		48K	-010M	001
A225401235-606		48G	-010D	001
A225401235-608		48D	-010F	001
A225401235-610		48D	-010G	001
A225401235-612		48G	-010G	001
A225401235-614		48D	-010H	001
A225401235-616		48G	-010H	001
A225401235-618		48D	-010D	001
A225401235-620		48G	-010F	001
A225401235-622		48G	010A	001
		48L	-010N	001
A225401235-624		48D	-010J	001
A225401235-626		48F	010A	001
A225401235-628		48G	-010K	001
A225401235-630		48G	-010L	001
A225401235-632		48D	-010K	001

- ITEM NOT ILLUSTRATED

ALPHA/NUMERIC INDEX

PART NUMBER	AIRLINE STOCK NUMBER	FIG NUMBER	ITEM NUMBER	TOTAL REQ'D
A225401235-634		48G	-010J	001
		48K	-010G	001
A225401235-636		48D	-010L	001
A225401235-638		48G	-010M	001
A225401235-642		48H	010A	001
		48K	-010F	001
A225401235-644		48H	-010B	001
A225401235-646		48H	-010C	001
A225401235-648		48J	010A	001
A225401235-650		48H	-010F	001
A225401235-652		48H	-010G	001
A225401235-654		48D	-010E	001
A225401235-656		48H	-010M	001
A225401235-658		48H	-010E	001
A225401235-660		48H	-010K	001
A225401235-662		48J	-010B	001
A225401235-664		48H	-010H	001
A225401235-666		48H	-010J	001
A225401235-668		48K	-010B	001
A225401235-670		48J	-010C	001
A225401235-672		48H	-010L	001
		48K	-010C	001
A225401235-674		48K	-010H	001
A225401235-676		48K	-010K	001
A225401235-678		48K	010A	001
A225401235-680		48K	-010D	001
A225401235-682		48K	-010E	001
A225401235-684		48L	-010B	001
A225401235-686		48L	-010D	001
A225401235-688		48L	-010C	001
A225401235-690		48L	-010F	001
A225401235-692		48J	-010D	001
A225401235-694		48L	010A	001
A225401235-696		48L	-010H	001
A225401235-698		48L	-010G	001

- ITEM NOT ILLUSTRATED

ALPHA/NUMERIC INDEX

PART NUMBER	AIRLINE STOCK NUMBER	FIG NUMBER	ITEM NUMBER	TOTAL REQ'D
A225401235-700		48L	-010J	001
A225401235-702		48L	-010K	001
A225401235-704		48L	-010L	001
A225401235-706		48L	-010M	001
A225401235-708		48F	-010B	001
A225401235-710		48M	-010H	001
A225401235-716		48H	-010D	001
A225401235-738		06W	-010M	001
		48D	-010N	001
A225401235-740		06Z	-010Q	001
A225401235-742		06Z	-010P	001
A225401235-746		48J	-010M	001
A225401235-748		48F	-010D	001
A225401235-750		48B	-010M	001
A225401235-752		48K	-010N	001
A225401235-754		48D	-010P	001
A225401235576		48D	010A	001
A2254012358504		06Y	-010L	001
A2254012358530		06Z	-010N	001
A2254012358532		48C	-010M	001
A2254012358536		06Z	-010M	001
A2254012358556		06Z	-010L	001
		48C	-010N	001
A2254012358592		48C	-010G	001
A225401236-200		05G	190A	001
		06A	290A	001
		06B	420A	001
		06E	420A	001
		06F	420A	001
		06G	420A	001
		06J	480A	001
		06K	480A	001
		06M	380A	001
		06Q	410A	001
		06R	380A	001

- ITEM NOT ILLUSTRATED

ALPHA/NUMERIC INDEX

PART NUMBER	AIRLINE STOCK NUMBER	FIG NUMBER	ITEM NUMBER	TOTAL REQ'D
		06T	420A	001
		06U	370A	001
		06V	350A	001
		06W	380A	001
		06X	340A	001
		06Y	320A	001
		06Z	310A	001
		48A	310A	001
		48B	340A	001
		48C	350A	001
		48D	320A	001
		48E	330A	001
		48F	350A	001
		48G	350A	001
		48H	350A	001
		48J	340A	001
		48K	350A	001
		48L	350A	001
		48M	350A	001
		48N	350A	001
		48	320A	001
		6	420A	001
A225401236-202		05A	260A	001
A225401236-204		05A	270A	001
		05G	150A	001
A225401237-222		31B	210A	003
		31C	210A	003
A225401237-224		31B	220A	003
		31C	220A	003
A225401238-010		07H	180A	006
A225401238-014		13F	220A	001
A225401238-200		06S	260A	002
		07H	230A	002
A225401238-202		05E	110A	002
A225401238-204		05E	120A	002

- ITEM NOT ILLUSTRATED

ALPHA/NUMERIC INDEX

PART NUMBER	AIRLINE STOCK NUMBER	FIG NUMBER	ITEM NUMBER	TOTAL REQ'D
A225401238-208		13F	160A	001
A225401238-212		06S	320A	001
A225401238-500		13F	140A	001
A225401238-502		07H	130A	001
A225401238-504		05E	100A	001
A225401238-506		13F	150A	001
A225401238-508		06S	290A	001
A225401238-510		05E	080A	001
A225401238-512		13F	200A	001
A225401239-000		02B	-120C	001
		02C	-100B	001
A225401239-002		02B	-120D	001
		02C	-100C	001
		02D	-100C	001
A225401239-004		07W	125A	001
		49C	125A	001
A225401239-200		02A	120A	001
		02B	120A	001
		02D	-100B	001
		2	120A	001
A225401239-204		02A	-120B	001
		02B	-120B	001
		02C	100A	001
		02D	100A	001
		2	-120B	001
A225401239-206		07W	127A	001
		49C	127A	001
A225401241-500		05B	010A	001
		5	010A	001
A225401241-502		05C	-010E	001
		5	-010B	001
A225401241-504		5	-010D	001
A225401241-506		5	-010E	001
A225401241-508		05B	-010D	001
A225401241-510		05B	-010C	001

- ITEM NOT ILLUSTRATED

ALPHA/NUMERIC INDEX

PART NUMBER	AIRLINE STOCK NUMBER	FIG NUMBER	ITEM NUMBER	TOTAL REQ'D
A225401241-600		05A	010A	001
		05B	-010H	001
		5	-010C	001
A225401241-602		05A	-010B	001
A225401241-604		05A	-010C	001
A225401241-606		05A	-010D	001
A225401241-700		05B	-010B	001
		05C	-010F	001
		05E	010A	001
A225401241-704		05B	-010G	001
A225401241-726		05B	-010F	001
		05C	-010B	001
A225401241-732		05B	-010J	001
		05C	-010D	001
A225401241-736		05B	-010E	001
A225401241-738		05B	-010L	001
		05C	010A	001
A225401241-740		05C	-010C	001
A225401241-750		05D	010C	001
A225401241-754		05D	010B	001
A225401241-784		05D	010A	001
A225401242-500		05C	-010H	001
A225401242-504		05C	-010G	001
A225401242-526		05C	-010J	001
A225401242-532		05C	-010K	001
A225401242-536		05G	-010B	001
A225401242-538		05C	-010L	001
		05G	-010C	001
A225401242-540		05G	010A	001
A225401242-600		05D	010D	001
A225401242-604		05F	010A	001
A225401242-700		05G	-010D	001
A225401242-704		05G	-010G	001
A225401242-726		05G	-010F	001
A225401242-732		05G	-010E	001

- ITEM NOT ILLUSTRATED

ALPHA/NUMERIC INDEX

PART NUMBER	AIRLINE STOCK NUMBER	FIG NUMBER	ITEM NUMBER	TOTAL REQ'D
A225401242-738		05G	-010L	001
A225401242-740		05G	-010H	001
A225401242-800		05F	-010C	001
A225401242-804		05F	-010B	001
A225401242-900		05G	-010J	001
A225401243-500		02A	-240D	001
		02C	-220H	001
		02D	-210D	001
		2	240A	001
A225401243-502		02A	-240C	001
		2	-240B	001
A225401243-504		2	-240C	001
A225401243-506		02A	-240F	001
		2	-240D	001
A225401243-508		02A	-240B	001
		2	-240E	001
A225401243-510		02A	-240E	001
		2	-240G	001
A225401243-512		02A	240A	001
		2	-240H	001
A225401243-514		02A	-240J	001
		2	-240F	001
A225401243-550		02A	-240G	001
		02B	-230F	001
		02C	-220C	001
		02D	210A	001
			215A	001
		2	-240J	001
A225401243-552		02A	-240H	001
		02B	-230E	001
		02C	-220B	001
A225401243-556		02A	-240K	001
		02B	-230C	001
		02C	220A	001
A225401243-558		02B	-230D	001

- ITEM NOT ILLUSTRATED

ALPHA/NUMERIC INDEX

PART NUMBER	AIRLINE STOCK NUMBER	FIG NUMBER	ITEM NUMBER	TOTAL REQ'D
		02C	-220F	001
A225401243-560		02A	-240M	001
		02B	-230B	001
A225401243-562		02C	-220D	001
A225401243-564		02A	-240N	001
		02B	230A	001
		02C	-220E	001
		02D	-210J	001
A225401243-566		02A	-240L	001
		02C	-220G	001
		02D	-210C	001
A225401243-568		02C	-220J	001
		02D	-210E	001
A225401243-570		02D	-210F	001
A225401243-572		02D	-210G	001
A225401243-574		02D	-210H	001
A225401243-582		02B	-230G	001
		02C	-220K	001
		02D	-210K	001
A225401243-600		02D	-210B	001
A225401244-200		02A	250A	002
		02C	-230B	002
		2	250A	002
A225401244-202		02A	-250B	002
		02B	240A	002
		02C	230A	002
		02D	220A	004
			221A	002
		2	-250B	002
A225401245-500		05B	-130B	001
		05G	-140B	001
		05H	-140C	001
A225401245-502		05A	115A	001
		05B	130A	001
		05C	-130F	001

- ITEM NOT ILLUSTRATED

ALPHA/NUMERIC INDEX

PART NUMBER	AIRLINE STOCK NUMBER	FIG NUMBER	ITEM NUMBER	TOTAL REQ'D
		05D	-130C	001
		05F	-140B	001
		05G	-140D	001
		05H	-140B	001
		05J	140A	001
		5	130A	001
A225401245-506		05B	-130D	001
		05C	-130E	001
		05D	-130B	001
		05F	140A	001
		05G	-140G	001
		05H	-140D	001
		5	-130C	001
A225401245-508		05A	-115B	001
A225401245-510		05F	-140E	001
A225401245-512		05B	-130C	001
		05C	-130B	001
		05G	-140F	001
		5	-130B	001
A225401245-520		05A	-115C	001
		05D	130A	001
A225401245-522		05B	-130F	001
		05C	130A	001
		05F	-140C	001
		05G	-140C	001
		05H	140A	001
A225401245-524		05B	-130E	001
		05C	-130D	001
		05G	-140E	001
A225401245-526		05C	-130C	001
		05G	140A	001
		05H	-140E	001
A225401245-528		05H	-140G	001
		05J	-140B	001
A225401245-530		05H	-140F	001

- ITEM NOT ILLUSTRATED

ALPHA/NUMERIC INDEX

PART NUMBER	AIRLINE STOCK NUMBER	FIG NUMBER	ITEM NUMBER	TOTAL REQ'D
A225401245-532		05J	-140C	001
A225401245-534		05F	-140D	001
A225401245-542		05F	-140F	001
A225401246-500		05H	-010B	001
		05J	010A	001
A225401246-504		05H	-010C	001
A225401246-532		05G	-010K	001
A225401246-536		05H	-010E	001
A225401246-538		05H	010A	001
A225401246-540		05H	-010F	001
A225401246-542		05J	010B	001
A225401246-544		05J	010C	001
A225401246-600		05F	-010D	001
A225401246-638		05F	-010E	001
A225401246-644		05F	-010G	001
A225401246-646		05F	-010H	001
A225401246-650		05F	-010L	001
A225401246-700		05H	-010D	001
A225401246-744		05F	-010K	001
A225401246-800		05F	-010F	001
A225401246-802		05H	-010G	001
A225401246-804		05H	-010H	001
A225401246-806		05F	-010J	001
A225401250-500		4	010A	001
A225401250-502		4	-010B	001
A225401250-506		4	-010C	001
A225401250-508		4	-010D	001
A225401250-510		4	-010E	001
A225401250-512		4	-010G	001
A225401250-514		4	-010H	001
A225401250-516		4	-010F	001
A225401250-518		4	-010J	001
A225401251-500		4	-010K	001
A225401251-502		04A	-010M	001
A225401251-508		04A	-010N	001

- ITEM NOT ILLUSTRATED

ALPHA/NUMERIC INDEX

PART NUMBER	AIRLINE STOCK NUMBER	FIG NUMBER	ITEM NUMBER	TOTAL REQ'D
A225401251-514		04A	010L	001
A225401251-516		04A	-010R	001
A225401251-518		04A	-010Q	001
A225401251-520		04A	-010P	001
A225401251-550		4	-010L	001
A225401251-600		04A	-010T	001
A225401251-602		04A	-010S	001
		4	-010M	001
A225401251-604		04A	-010U	001
A225401251-606		04A	-010V	001
A225401251-608		04A	-010W	001
A225401301-500		7	010A	001
A225401301-502		7	-010C	001
A225401301-504		7	-010E	001
A225401301-506		7	-010G	001
A225401301-510		7	-010J	001
A225401301-512		07A	-010D	001
A225401301-514		07A	-010K	001
		07B	-010F	001
A225401301-516		07B	-010C	001
A225401301-518		7	-010M	001
A225401301-520		07C	-010E	001
A225401301-524		07C	-010H	001
A225401301-526		07C	-010C	001
A225401301-602		7	-010B	001
A225401301-604		7	-010D	001
A225401301-606		7	-010F	001
A225401301-614		07B	-010B	001
A225401301-616		07B	-010G	001
		7	-010L	001
A225401301-618		7	010N	001
A225401301-700		7	-010K	001
A225401301-702		07A	-010H	001
A225401301-704		07A	-010J	001
A225401301-706		07B	-010D	001

- ITEM NOT ILLUSTRATED

ALPHA/NUMERIC INDEX

PART NUMBER	AIRLINE STOCK NUMBER	FIG NUMBER	ITEM NUMBER	TOTAL REQ'D
		07Y	-010N	001
A225401301-710		07A	-010F	001
A225401301-712		07A	-010L	001
A225401301-714		07S	-010M	001
A225401301-720		07C	-010B	001
A225401301-724		07C	-010G	001
A225401301-730		07C	-010D	001
A225401301-740		07C	-010F	001
A2254013018502		07B	-010M	001
A2254013018508		07Y	-010H	001
A2254013018514		07B	-010N	001
A2254013018516		07B	-010L	001
A2254013018522		07B	-010E	001
A2254013018608		07A	-010E	001
A2254013018610		07A	-010G	001
A2254013018704		07A	-010P	001
A2254013018722		49C	-010D	001
A2254013019722		07Y	-010M	001
		49C	-010J	001
A225401302-500		07D	-010J	001
		07G	-010H	001
A225401302-502		07E	-010L	001
		07J	010A	001
A225401302-504		07C	010A	001
A225401302-508		07D	-010L	001
		07K	010A	001
A225401302-510		07E	-010F	001
A225401302-512		07E	-010B	001
A225401302-514		07B	-010P	001
		07E	-010M	001
		07J	-010J	001
A225401302-518		07F	-010J	001
A225401302-520		07F	-010M	001
A225401302-522		07J	-010E	001
A225401302-524		07B	010A	001

- ITEM NOT ILLUSTRATED

ALPHA/NUMERIC INDEX

PART NUMBER	AIRLINE STOCK NUMBER	FIG NUMBER	ITEM NUMBER	TOTAL REQ'D
		07F	-010D	001
A225401302-526		07J	-010L	001
A225401302-528		07B	-010J	001
A225401302-530		07B	-010K	001
		07J	-010M	001
A225401302-534		07G	-010C	001
A225401302-600		07D	-010E	001
		07G	-010J	001
A225401302-602		07E	-010J	001
		07J	-010D	001
A225401302-604		07D	-010N	001
		07J	-010G	001
A225401302-606		07E	010A	001
A225401302-608		07E	-010K	001
		07J	-010B	001
A225401302-610		07G	-010B	001
A225401302-612		07G	-010F	001
A225401302-614		07G	-010G	001
A225401302-616		07D	-010G	001
		07J	-010F	001
A225401302-618		07J	-010H	001
A225401302-620		07B	-010H	001
A225401302-622		07G	-010L	001
A225401302-700		07D	-010C	001
A225401302-702		07E	-010H	001
A225401302-704		07G	010A	001
A225401302-720		07G	-010E	001
A225401302-730		07H	010A	001
A225401302-750		07D	010A	001
A225401302-752		07D	-010K	001
		07K	-010D	001
A225401302-770		07D	-010B	001
		07K	-010B	001
A225401302-772		07D	-010H	001
		07F	-010E	001

- ITEM NOT ILLUSTRATED

ALPHA/NUMERIC INDEX

PART NUMBER	AIRLINE STOCK NUMBER	FIG NUMBER	ITEM NUMBER	TOTAL REQ'D
A225401302-774		07D	-010F	001
A225401302-776		07D	-010D	001
A225401302-778		07F	-010B	001
A225401302-780		07E	-010E	001
		07F	-010C	001
A225401302-782		07E	-010C	001
A225401302-784		07E	-010D	001
A225401302-786		07E	-010G	001
A225401302-788		07E	-010N	001
A225401302-790		07F	-010G	001
A225401302-792		07F	-010H	001
A225401302-794		07F	-010L	001
A225401302-796		07F	-010F	001
A225401302-798		07G	-010D	001
A225401302-800		07J	-010K	001
A225401302-802		07J	-010N	001
A225401302-804		07F	-010K	001
A225401302-850		07K	-010C	001
A2254013028500		07Y	-010G	001
		49C	-010E	001
A2254013028506		07C	-010J	001
A2254013028510		07G	-010K	001
A2254013028532		07Y	-010E	001
A225401303-500		07N	-010D	001
A225401303-504		07K	-010G	001
A225401303-506		07K	-010K	001
A225401303-510		07L	-010B	001
A225401303-514		07N	-010F	001
A225401303-516		07P	-010C	001
A225401303-600		07L	-010D	001
A225401303-602		07L	-010H	001
A225401303-604		07N	-010B	001
A225401303-606		07L	-010G	001
A225401303-650		07K	-010L	001
A225401303-652		07K	-010E	001

- ITEM NOT ILLUSTRATED

ALPHA/NUMERIC INDEX

PART NUMBER	AIRLINE STOCK NUMBER	FIG NUMBER	ITEM NUMBER	TOTAL REQ'D
A225401303-656		07K	-010F	001
A225401303-658		07L	010A	001
A225401303-660		07L	-010E	001
A225401303-662		07L	-010M	001
A225401303-664		07N	-010H	001
A225401303-666		07N	-010J	001
A225401303-668		07N	-010L	001
A225401303-670		07L	-010F	001
A225401303-752		07K	-010J	001
A225401303-754		07L	-010C	001
		07N	-010C	001
A225401303-756		07L	-010L	001
A225401303-758		07L	-010J	001
A225401303-760		07M	010A	001
A225401303-762		07L	-010K	001
A225401303-764		07N	010A	001
A225401303-766		07N	-010E	001
A225401303-768		07P	-010B	001
A225401303-770		07P	-010D	001
A225401303-772		07N	-010K	001
A225401303-774		07P	010A	001
A225401303-780		07N	-010G	001
A225401303-784		07J	-010C	001
A225401303-786		07K	-010N	001
A225401303-788		07N	-010N	001
A2254013038500		07Y	-010K	001
		49C	-010F	001
A2254013038502		07K	-010H	001
A2254013038506		07K	-010M	001
A2254013038660		07L	-010N	001
A2254013038664		07N	-010M	001
A225401304-500		07Q	010A	001
A225401304-502		07Q	-010B	001
A225401304-508		07R	-010F	001
A225401304-510		07R	-010B	001

- ITEM NOT ILLUSTRATED

ALPHA/NUMERIC INDEX

PART NUMBER	AIRLINE STOCK NUMBER	FIG NUMBER	ITEM NUMBER	TOTAL REQ'D
A225401304-512		07R	-010C	001
A225401304-550		07Q	-010C	001
A225401304-600		07Q	-010E	001
A225401304-602		07Q	-010G	001
A225401304-606		07Q	-010D	001
A225401304-608		07Q	-010H	001
A225401304-618		49B	-010F	001
A225401304-650		07Q	-010J	001
A225401304-700		07Q	-010L	001
A225401304-702		07Q	-010F	001
A225401304-704		07R	-010D	001
A225401304-708		07R	010A	001
A225401304-710		07R	-010G	001
A225401304-752		07R	-010K	001
A225401304-754		07R	-010H	001
A225401304-756		07S	-010F	001
A225401304-762		07S	-010G	001
A225401304-764		07S	-010B	001
A225401304-766		07S	-010H	001
A225401304-770		07Q	-010M	001
A225401304-774		07R	-010N	001
A225401304-800		07R	-010L	001
A225401304-802		07S	010A	001
A225401304-804		07R	-010J	001
A225401304-808		07S	-010N	001
A225401304-852		07S	-010C	001
A225401304-854		07T	-010C	001
A225401304-856		07S	-010D	001
A225401304-858		07S	-010E	001
A225401304-860		07S	-010J	001
A225401304-862		07S	-010L	001
A225401304-870		07V	-010J	001
A2254013048506		07R	-010E	001
A2254013048710		07R	-010M	001
A2254013048806		07Q	-010K	001

- ITEM NOT ILLUSTRATED

ALPHA/NUMERIC INDEX

PART NUMBER	AIRLINE STOCK NUMBER	FIG NUMBER	ITEM NUMBER	TOTAL REQ'D
A225401305-502		07T	-010B	001
A225401305-504		07T	-010G	001
A225401305-506		07V	-010K	001
A225401305-508		07T	-010F	001
A225401305-510		07T	010A	001
A225401305-512		07T	-010E	001
A225401305-514		07T	-010D	001
A225401305-518		07V	-010C	001
A225401305-520		07V	010A	001
A225401305-522		07U	-010D	001
A225401305-524		07T	-010H	001
A225401305-526		07U	-010B	001
A225401305-528		07T	-010L	001
A225401305-530		07T	-010K	001
A225401305-532		07T	-010J	001
A225401305-536		07U	010A	001
A225401305-538		07U	-010E	001
		07V	-010L	001
A225401305-540		07U	-010F	001
A225401305-542		07U	-010J	001
			-010M	001
A225401305-544		07S	-010K	001
A225401305-546		07U	-010H	001
A225401305-548		07U	-010K	001
A225401305-550		07U	-010C	001
A225401305-552		07U	-010L	001
A225401305-554		07V	-010D	001
A225401305-558		07V	-010E	001
A225401305-560		07V	-010M	001
A225401305-562		07U	-010G	001
A225401305-564		07V	-010F	001
A225401305-566		07V	-010H	001
A225401305-572		07W	-010L	001
A225401305-574		07W	-010F	001
A225401305-576		07U	-010N	001

- ITEM NOT ILLUSTRATED

ALPHA/NUMERIC INDEX

PART NUMBER	AIRLINE STOCK NUMBER	FIG NUMBER	ITEM NUMBER	TOTAL REQ'D
A225401305-580		07T	-010M	001
A225401305-600		07W	-010G	001
A225401305-602		07W	-010H	001
A225401305-604		07W	-010J	001
A225401305-606		07W	010A	001
		49B	010A	001
A225401305-608		07X	-010C	001
A225401305-610		07X	010A	001
A225401305-612		07Z	-010G	001
A225401305-614		07W	-010E	001
A225401305-616		07W	-010C	001
		07X	-010D	001
		49A	-010D	001
A225401305-618		07W	-010K	001
A225401305-620		07X	-010K	001
A225401305-622		07W	-010D	001
		49C	-010C	001
A225401305-624		07X	-010F	001
A225401305-626		07W	-010B	001
A225401305-628		07X	-010G	001
A225401305-630		07X	-010M	001
		49A	-010F	001
A225401305-632		07X	-010J	001
A225401305-634		07X	-010L	001
A225401305-636		07X	-010B	001
A225401305-638		07X	-010E	001
A225401305-640		07X	-010H	001
A225401305-644		07Z	010A	001
A225401305-646		07Z	-010F	001
		49A	-010H	001
A225401305-648		07Z	-010B	001
		49	-010H	001
A225401305-650		49C	010A	001
		49	-010B	001
A225401305-652		07Z	-010C	001

- ITEM NOT ILLUSTRATED

ALPHA/NUMERIC INDEX

PART NUMBER	AIRLINE STOCK NUMBER	FIG NUMBER	ITEM NUMBER	TOTAL REQ'D
A225401305-654		07Z	-010E	001
A225401305-656		07Z	-010K	001
A225401305-658		07Z	-010H	001
		49C	-010B	001
A225401305-660		07Z	-010J	001
A225401305-662		49	010A	001
A225401305-664		49C	-010G	001
		49	-010C	001
A225401305-666		07Z	-010L	001
A225401305-668		49	-010D	001
A225401305-670		49	-010F	001
A225401305-672		49	-010E	001
A225401305-674		49B	-010B	001
A225401305-676		49	-010J	001
A225401305-678		49	-010K	001
A225401305-680		49B	-010D	001
		49	-010L	001
A225401305-682		49	-010G	001
A225401305-684		49	-010M	001
A225401305-686		49A	010A	001
A225401305-688		49A	-010C	001
A225401305-690		49A	-010B	001
A225401305-692		49A	-010E	001
A225401305-694		49A	-010G	001
A225401305-696		49A	-010K	001
A225401305-698		49A	-010J	001
A225401305-700		49B	-010E	001
A225401305-702		49B	-010C	001
A225401305-722		07Y	-010J	001
A225401305-754		07Z	-010D	001
A225401305-778		07W	-010M	001
		49B	-010K	001
A225401305-976		49C	-010H	001
A2254013058504		49B	-010J	001
A2254013058514		49B	-010H	001

- ITEM NOT ILLUSTRATED

ALPHA/NUMERIC INDEX

PART NUMBER	AIRLINE STOCK NUMBER	FIG NUMBER	ITEM NUMBER	TOTAL REQ'D
A2254013058556		07V	-010B	001
A2254013058558		07V	-010N	001
A2254013058568		07V	-010G	001
A2254013058570		49B	-010G	001
A225401307-500		07A	010A	001
A225401307-502		07A	-010B	001
A225401307-504		07A	-010C	001
A225401307-506		07D	-010M	001
		07F	010A	001
A225401307-514		07X	-010N	001
A2254013078500		07A	-010N	001
		07Y	-010L	001
A2254013078504		07A	-010M	001
A225401311-500		7	-010H	001
A225401400-550		20C	010A	001
A225401402-000		20C	100A	001
A225401410-500		06B	-120B	001
		06F	-150D	001
		06G	-150B	001
		06N	-160B	001
		6	110A	001
A225401410-502		06A	120A	001
		06B	120A	001
		06C	150A	001
		06D	150A	001
		06E	150A	001
		06F	150A	001
		06G	150A	001
		06H	150A	001
		06J	160A	001
		06K	160A	001
		06L	160A	001
		06M	160A	001
		06N	160A	001
		06P	160A	001

- ITEM NOT ILLUSTRATED

ALPHA/NUMERIC INDEX

PART NUMBER	AIRLINE STOCK NUMBER	FIG NUMBER	ITEM NUMBER	TOTAL REQ'D
A225401410-504		06Q	160A	001
		06R	160A	001
		06T	160A	001
		06U	160A	001
		06V	160A	001
		06W	-180B	001
		06X	160A	001
		06Y	120A	001
		06Z	120A	001
		48A	160A	001
		48B	170A	001
		48C	180A	001
		48D	120A	001
		48E	180A	001
		48F	-180B	001
		48G	180A	001
		48H	180A	001
		48J	140A	001
		48K	180A	001
		48L	180A	001
		48M	180A	001
		48	120A	001
		6	-110C	001
		06C	-150C	001
		06D	-150B	001
		06F	-150B	001
		06H	-150B	001
		06J	-160E	001
		06K	-160D	001
		06M	-160C	001
		06N	-160D	001
		06P	-160B	001
		06U	-160C	001
		06W	180A	001
		06Y	-120D	001

- ITEM NOT ILLUSTRATED

ALPHA/NUMERIC INDEX

PART NUMBER	AIRLINE STOCK NUMBER	FIG NUMBER	ITEM NUMBER	TOTAL REQ'D
		48D	-120C	001
		48	-120B	001
		6	-110B	001
A225401410-506		06C	-150B	001
A225401410-508		06F	-150C	001
		06J	-160F	001
		06K	-160B	001
		06P	-160C	001
		06W	-180C	001
		48B	-170B	001
		48K	-180B	001
A225401410-510		06F	-150E	001
		06K	-160C	001
		06Q	-160B	001
		06U	-160D	001
		06Y	-120C	001
A225401410-512		06H	-150C	001
		06J	-160C	001
		06L	-160B	001
		06M	-160B	001
		06T	-160B	001
		06U	-160B	001
A225401410-514		06J	-160D	001
		06L	-160C	001
		06N	-160C	001
		06V	-160B	001
		06Y	-120B	001
A225401410-518		06J	-160B	001
		06L	160D	001
		06P	-160D	001
		06V	-160C	001
		06X	-160C	001
		48A	-160D	001
		48D	-120D	001
		48F	180A	001

- ITEM NOT ILLUSTRATED

ALPHA/NUMERIC INDEX

PART NUMBER	AIRLINE STOCK NUMBER	FIG NUMBER	ITEM NUMBER	TOTAL REQ'D
		48G	-180B	001
		48J	-140B	001
		48L	-180B	001
		48M	-180C	001
		48N	180A	001
		48	-120C	001
A225401410-520		06Q	-160C	001
		06X	-160B	001
		06Z	-120B	001
		48A	-160B	001
		48D	-120B	001
		48H	-180B	001
A225401410-522		48C	-180B	001
		48H	-180C	001
		48L	-180C	001
A225401410-524		48A	-160C	001
A225401410-526		48M	-180B	001
A225401410-534		48B	-170C	001
		48K	-180C	001
A225401410-600		06S	120A	001
A225401412-510		19B	-010B	001
A225401412-512		19B	010A	001
A225401412-514		19B	-010C	001
		19D	-010C	001
A225401412-516		19D	-010B	001
A225401412-558		19B	-010D	001
		19C	010A	001
A225401412-560		19D	010A	001
A225401412-562		19A	-010D	001
A225401412-564		19A	-010B	001
A225401412-566		19A	-010C	001
A225401412-568		19A	010A	001
A225401412-602		19	010A	001
A225401412-604		19	-010B	001
A225401412-606		19	-010C	001

- ITEM NOT ILLUSTRATED

ALPHA/NUMERIC INDEX

PART NUMBER	AIRLINE STOCK NUMBER	FIG NUMBER	ITEM NUMBER	TOTAL REQ'D
A225401412-700		19E	010A	001
A225401412-702		19E	-010D	001
A225401412-704		19E	-010E	001
A225401412-706		19E	-010G	001
A225401412-708		19F	-010E	001
A225401412-710		19F	-010F	001
A225401412-712		19F	-010D	001
		19H	-010C	001
A225401412-714		19F	-010G	001
A225401412-716		19F	-010J	001
A225401412-718		19H	-010D	001
A225401412-720		19H	-010F	001
A225401412-722		19H	-010G	001
A225401412-728		19E	-010J	001
A225401412-730		19E	-010K	001
A225401412-750		19E	-010B	001
		19F	010A	001
		19H	-010B	001
A225401412-752		19E	-010H	001
		19F	-010B	001
A225401412-756		19E	-010C	001
A225401412-758		19F	-010H	001
		19H	-010E	001
A225401412-800		19E	-010F	001
A225401412-802		19F	-010C	001
		19H	010A	001
A225401412-850		19J	010A	001
A225401413-500		19	020A	001
A225401413-502		19A	-020D	001
		19B	-020B	001
		19C	020A	001
		19D	-020B	001
		19	-020B	001
A225401413-504		19A	020A	001
		19D	020A	001

- ITEM NOT ILLUSTRATED

ALPHA/NUMERIC INDEX

PART NUMBER	AIRLINE STOCK NUMBER	FIG NUMBER	ITEM NUMBER	TOTAL REQ'D
A225401413-506		19A	-020B	001
		19B	020A	001
A225401413-508		19A	-020C	001
A225401413-520		19E	-020D	001
		19G	010A	001
A225401413-522		19E	020A	001
		19F	020A	001
		19H	020A	001
		19J	020A	001
A225401413-524		19E	-020B	001
A225401413-526		19E	-020F	001
		19F	-020B	001
A225401413-530		19E	-020C	001
A225401413-532		19E	-020E	001
A225401413-534		19F	-020D	001
A225401413-536		19F	-020E	001
A225401413-538		19F	-020C	001
		19H	-020B	001
A225401413-540		19F	-020F	001
A225401413-542		19F	-020G	001
A225401413-544		19H	-020C	001
A225401413-546		19H	-020D	001
A225401430-500		17B	010A	001
		17	010A	001
A225401430-502		17A	-010C	001
A225401430-504		17A	010A	001
		17B	-010F	001
A225401430-506		17A	-010B	001
A225401430-508		17A	-010D	001
		17B	-010B	001
A225401430-510		17A	-010E	001
		17B	-010C	001
		17F	010A	001
A225401430-512		17A	-010F	001
A225401430-514		17A	-010G	001

- ITEM NOT ILLUSTRATED

ALPHA/NUMERIC INDEX

PART NUMBER	AIRLINE STOCK NUMBER	FIG NUMBER	ITEM NUMBER	TOTAL REQ'D
A225401430-518		17A	-010H	001
A225401430-520		17A	-010J	001
		17B	-010G	001
A225401430-522		17B	-010D	001
A225401430-524		17B	-010E	001
A225401445-500		14	010A	001
A225401445-502		14	-010B	001
A225401445-504		14	-010C	001
A225401445-506		14A	-010D	001
		14	-010D	001
A225401445-508		14	-010E	001
A225401445-510		14A	010A	001
		14	-010G	001
A225401445-512		14A	-010B	001
		14	-010H	001
A225401445-514		14A	-010C	001
		14C	010A	001
		14	-010F	001
A225401445-516		14A	-010E	001
A225401445-518		14A	-010G	001
A225401445-520		14	-010J	001
A225401445-800		14A	-010F	001
A225401445-802		14A	-010H	001
		14B	010A	001
A225401445-804		14A	-010J	001
		14B	-010B	001
A225401445-806		14A	-010K	001
A225401445-808		14A	-010L	001
A225401462-000		5	-110B	001
A225401491-600		19K	010A	001
A225401492-502		19K	020A	001
A225411230-556		06E	-010Q	001
		06Q	-010L	001
A225411230-578		48N	010A	001
A225491030-000		13T	-010C	001

- ITEM NOT ILLUSTRATED

ALPHA/NUMERIC INDEX

PART NUMBER	AIRLINE STOCK NUMBER	FIG NUMBER	ITEM NUMBER	TOTAL REQ'D
A225491030-002		13T	010A	001
A225491030-004		13T	-010B	001
A225491030-014		13U	010A	001
A225491231-500		48E	-010H	001
		6	-010P	001
A225491231-508		06E	-010R	001
A225491231-514		48E	-010J	001
			-010L	001
A225491231-526		48E	-010B	001
A225491231-530		06F	-010P	001
A225491231-532		48E	010A	001
		6	-010N	001
A225491231-540		48E	-010K	001
A225491231-544		06B	-010N	001
		06F	-010N	001
		06T	-010M	001
A225491231-548		06A	-010G	001
		48E	-010M	001
A225491231-556		06E	-010S	001
A225491231-558		06K	-010N	001
A225491231-578		06J	-010E	001
		06M	-010B	001
A225491231-590		06E	-010P	001
		06G	-010K	001
A225491231-594		48A	010A	001
A225491241-500		05A	-010E	001
		5	-010F	001
A225491300-500		07Y	010A	001
A225491305-504		07Y	-010B	001
A225491305-570		07Y	-010D	001
A225491305-622		07Y	-010F	001
A225491305-624		07Y	-010C	001
A225498000-000		13A	-084A	AR
		13	-085A	004
A23001-2-5S		16F	050A	001

- ITEM NOT ILLUSTRATED

ALPHA/NUMERIC INDEX

PART NUMBER	AIRLINE STOCK NUMBER	FIG NUMBER	ITEM NUMBER	TOTAL REQ'D
A238100001-000		22	090A	001
A238100004-000		22A	220A	001
		22E	300A	001
A238100005-000		22A	200A	001
A238100006-000		22A	240A	001
A238100007-000		22A	230A	001
		22E	320A	001
A238100009-000		22A	090A	001
		22B	100A	001
		22	-090B	001
A238100300-200		23A	130A	001
		23B	050A	001
		23C	050A	001
		23D	050A	001
		23	100A	001
A238100301-200		22A	120A	002
		22B	130A	002
		22C	140A	002
		22D	040A	002
		22E	040A	002
		22F	030A	002
		22G	020A	002
		22H	030A	002
		22J	030A	002
		22K	030A	002
		22	120A	002
A238100302-200		22A	040A	002
		22B	040A	002
		22	-045B	001
			040A	001
A238100302-202		22	045A	001
A238100303-200		22C	190A	001
A238100306-200		15A	040A	001
		15	040A	001
A238100306-202		15D	210A	001

- ITEM NOT ILLUSTRATED

ALPHA/NUMERIC INDEX

PART NUMBER	AIRLINE STOCK NUMBER	FIG NUMBER	ITEM NUMBER	TOTAL REQ'D
		15S	160A	001
A238101000-000		22	150A	001
A238101001-000		22A	140A	001
		22B	260A	001
		22C	270A	001
		22J	110A	001
		22	210A	001
A238101003-000		22A	210A	001
A238101004-000		22B	160A	001
		22C	080A	001
		22J	090A	001
		22	-150B	001
A238101006-000		22	-150C	001
A238101007-004		22	-210B	001
A238101008-004		22D	-270B	001
		22G	250A	001
		22H	290A	001
		22K	110A	001
A238101030-000		22D	270A	001
		22E	270A	001
		22F	290A	001
A238101204-000		15D	-010C	001
		15S	-010C	001
A238101255-000		15F	-010G	001
		15H	-010B	001
		15J	010A	001
		15N	010A	001
		15Q	-010E	001
A238101255-002		15C	010A	001
		15F	010A	001
		15G	-010C	001
		15H	010A	001
		15K	-010B	001
		15L	-010E	001
		15Q	-010F	001

- ITEM NOT ILLUSTRATED

ALPHA/NUMERIC INDEX

PART NUMBER	AIRLINE STOCK NUMBER	FIG NUMBER	ITEM NUMBER	TOTAL REQ'D
		15	-080G	001
A238101255-006		15C	-010B	001
		15E	-010B	001
		15F	-010B	001
		15G	-010B	001
		15K	-010C	001
		15L	-010F	001
		15P	010A	001
		15Q	010A	001
A238101255-008		15C	-010F	001
		15F	-010F	001
		15H	-010E	001
A238101255-010		15F	-010D	001
		15G	-010D	001
		15K	010A	001
		15L	-010J	001
A238101255-012		15C	-010G	001
A238101255-016		15C	-010D	001
		15F	-010L	001
		15M	-010C	001
A238101255-018		15C	-010E	001
		15F	-010J	001
		15G	-010E	001
		15H	-010H	001
		15M	010A	001
		15Q	-010K	001
A238101255-020		15F	-010C	001
		15L	-010C	001
A238101255-022		15B	010A	001
A238101255-024		15F	-010H	001
		15L	-010B	001
		15M	-010B	001
A238101255-026		15H	-010D	001
A238101255-028		15E	010A	001
		15F	-010E	001

- ITEM NOT ILLUSTRATED

ALPHA/NUMERIC INDEX

PART NUMBER	AIRLINE STOCK NUMBER	FIG NUMBER	ITEM NUMBER	TOTAL REQ'D
		15G	-010G	001
A238101255-030		15C	-010C	001
		15F	-010K	001
A238101255-032		15G	010A	001
		15H	-010C	001
		15L	-010D	001
		15Q	-010B	001
A238101255-034		15G	-010F	001
		15L	-010G	001
A238101255-036		15H	-010F	001
A238101255-038		15L	010A	001
A238101255-040		15H	-010G	001
A238101255-042		15H	-010J	001
A238101255-044		15K	-010D	001
		15L	-010K	001
A238101255-046		15L	-010H	001
		15Q	-010G	001
A238101255-048		15L	-010L	001
A238101255-050		15M	-010D	001
		15Q	-010J	001
A238101255-052		15M	-010E	001
		15Q	-010H	001
A238101255-054		15M	-010F	001
A238101255-056		15M	-010G	001
A238101255-058		15Q	-010C	001
A238101255-060		15Q	-010D	001
A238101255-090		15H	-010K	001
A238101255-112		15L	-010M	001
A238101257-000		15T	010A	001
		15U	010A	001
A238101257-200		15T	020A	001
		15U	020A	001
A238101258-000		15R	010A	001
A238101258-002		15R	-010C	001
A238101258-004		15R	-010B	001

- ITEM NOT ILLUSTRATED

ALPHA/NUMERIC INDEX

PART NUMBER	AIRLINE STOCK NUMBER	FIG NUMBER	ITEM NUMBER	TOTAL REQ'D
A238101258-136		15C	-010H	001
		15G	-010H	001
		15H	-010L	001
		15K	-010E	001
		15L	-010N	001
A238101258-200		15R	020A	001
A238101258-202		15R	-020C	001
A238101258-204		15R	-020B	001
A238101302-200		22	270A	001
A238301000-000		23A	180A	001
		23C	170A	001
		23	190A	001
A2547321001000		07A	280A	001
		15L	340A	001
A2547380202600		06C	-300B	001
A2547380205200		06N	-310C	001
A2547380205800		06P	-320C	001
		06W	-330C	001
A2547380206000		06A	270A	001
		06B	270A	001
		06C	300A	001
		06E	300A	001
		06G	-300A	001
		06H	340A	001
		06J	430A	001
		06K	350A	001
		06L	-310B	001
		06M	310A	001
		06N	310B	001
		06P	320A	001
		06Q	320A	001
		06R	330A	001
		06T	330A	001
		06U	350A	001
		06W	-330B	001

- ITEM NOT ILLUSTRATED

ALPHA/NUMERIC INDEX

PART NUMBER	AIRLINE STOCK NUMBER	FIG NUMBER	ITEM NUMBER	TOTAL REQ'D
		06X	330A	001
		06Y	310A	001
		48D	310A	001
		48E	480A	001
		48J	330A	001
		48	310A	001
		6	250A	001
A2547380206600		06N	310A	001
A2547380208400		06H	-340B	001
		06K	-350B	001
		06M	-310C	001
		06N	-310D	001
		06P	-320B	001
		06U	-350C	001
		06W	330A	001
		06Y	-310B	001
		48D	-310C	001
		48	-310B	001
A2547380208800		06H	-340C	001
		06J	-430B	001
		06L	310A	001
		06M	-310B	001
		06T	-330B	001
		06U	-350B	001
A2547380209800		06X	-330B	001
		48D	-310B	001
A2547380210200		48D	-310D	001
		48J	-330B	001
		48	-310C	001
A2547545923000		21	180A	001
A2547577000600		06C	-280B	001
A2547577004800		06A	250A	001
		06B	250A	001
		06C	280A	001
		06D	280A	001

- ITEM NOT ILLUSTRATED

ALPHA/NUMERIC INDEX

PART NUMBER	AIRLINE STOCK NUMBER	FIG NUMBER	ITEM NUMBER	TOTAL REQ'D
		06E	280A	001
		06F	280A	001
		06G	280A	001
		06H	280A	001
		06J	310A	001
		06K	290A	001
		06L	-320B	001
		06M	320A	001
		06N	320A	001
		06P	330A	001
		06Q	330A	001
		06T	310A	001
		06U	290A	001
		06V	310A	001
		06W	-310B	001
		06X	310A	001
		06Y	370A	001
		06Z	320A	001
		48A	430A	001
		48B	320A	001
		48C	330A	001
		48D	-330B	001
		48E	360A	001
		48F	-330B	001
		48G	330A	001
		48H	330A	001
		48J	350A	001
		48K	330A	001
		48L	330A	001
		48M	330A	001
		48	-330B	001
A2547577007000		06C	-280C	001
		06H	-280B	001
		06J	-310D	001
		06K	-290B	001

- ITEM NOT ILLUSTRATED

ALPHA/NUMERIC INDEX

PART NUMBER	AIRLINE STOCK NUMBER	FIG NUMBER	ITEM NUMBER	TOTAL REQ'D
		06P	-330B	001
		06U	-290C	001
		06W	310A	001
		06Y	-370C	001
		48D	330A	001
		48	330A	001
A2547577007400		06J	-310B	001
		06M	-320B	001
A2547577007600		06H	-280C	001
		06J	-310C	001
		06L	320A	001
		06M	-320C	001
		06T	-310B	001
		06U	-290B	001
A2547577007800		06P	-330C	001
A2547577008000		06Q	-330C	001
		06Z	-320B	001
		48H	-330B	001
A2547577008200		06P	-330D	001
		06X	-310B	001
		48A	-430B	001
		48D	-330C	001
		48F	330A	001
		48J	-350B	001
		48L	-330D	001
		48M	-330C	001
		48N	330A	001
		48	-330C	001
A2547577008800		48C	-330B	001
		48H	-330C	001
		48L	-330B	001
A2547577009000		48M	-330B	001
A2547577009400		48L	-330C	001
A2547769420000		18	100A	001
A292500300-200		26A	110A	002

- ITEM NOT ILLUSTRATED

ALPHA/NUMERIC INDEX

PART NUMBER	AIRLINE STOCK NUMBER	FIG NUMBER	ITEM NUMBER	TOTAL REQ'D
		26B	110A	002
		26C	110A	002
			111A	001
		26D	110A	002
		26E	110A	002
		26F	110A	002
		26G	110A	002
		26H	050A	002
		26J	110A	002
		26K	110A	002
		26L	050A	002
		26M	110A	002
		26N	110A	002
		26P	110A	002
		26Q	120A	001
		26R	110A	002
			111A	001
		26S	120A	002
		26T	110A	002
		26U	120A	001
		26V	100A	001
		26	110A	002
A292500300-202		27A	210A	001
		27B	210A	001
		27C	210A	001
		27D	290A	001
		27E	230A	001
		27	230A	001
A292500300-204		27A	190A	001
		27B	190A	001
		27C	190A	001
		27D	540A	001
		27E	420A	001
		27	190A	001
A292500300-220		26C	115A	001

- ITEM NOT ILLUSTRATED

ALPHA/NUMERIC INDEX

PART NUMBER	AIRLINE STOCK NUMBER	FIG NUMBER	ITEM NUMBER	TOTAL REQ'D
		26R	115A	001
A292500300-222		31	030A	001
A292500301-200		27D	340A	001
A292500303-200		26A	251A	001
		26B	440A	001
		26	470A	001
A292500304-200		26B	050A	001
		26C	-050B	001
		26	-050B	001
A292500309-200		14A	110A	001
		14B	110A	001
A292901200-000		26A	-010F	001
		26	010A	001
		27	-001A	RF
A292901200-004		26A	010A	001
		27	-001B	RF
A292901200-006		26	-010B	001
		27	-001C	RF
A292901200-008		26A	-010B	001
		26	-010H	001
		27	-001F	RF
A292901200-010		26B	010A	001
		26	-010C	001
		27	-001D	RF
A292901200-012		26	-010D	001
		27	-001E	RF
A292901201-000		26A	-010C	001
		27	-001H	RF
A292901201-002		26B	-010B	001
		26	-010F	001
		27	-001G	RF
A292901201-004		26A	-010D	001
		26	-010E	001
		27	-001J	RF
A292901201-006		26	-010G	001

- ITEM NOT ILLUSTRATED

ALPHA/NUMERIC INDEX

PART NUMBER	AIRLINE STOCK NUMBER	FIG NUMBER	ITEM NUMBER	TOTAL REQ'D
		27	-001K	RF
A292901201-008		26A	-010E	001
		27	-001L	RF
A292901301-000		26C	010A	001
		26D	-010B	001
		26E	010A	001
		27A	-001A	RF
A292901301-002		26H	010A	001
		27A	-001D	RF
A292901301-006		26C	-010B	001
		26D	-010C	001
		26E	-010B	001
		27A	-001B	RF
A292901301-008		26C	-010C	001
		26D	010A	001
		26E	-010C	001
		27A	-001C	RF
A292901303-000		26F	010A	001
		26G	010A	001
		27B	-001A	RF
A292901303-002		26L	010A	001
		27B	-001C	RF
A292901303-008		26F	-010B	001
		27B	-001B	RF
A292901304-002		31	010A	001
A292901305-000		26K	010A	001
		26M	010A	001
		26P	010A	001
		27C	-001B	RF
A292901305-002		26N	010A	001
		26P	-010C	001
		26T	010A	001
		27C	-001E	RF
A292901305-006		26J	010A	001
		26K	-010C	001

- ITEM NOT ILLUSTRATED

ALPHA/NUMERIC INDEX

PART NUMBER	AIRLINE STOCK NUMBER	FIG NUMBER	ITEM NUMBER	TOTAL REQ'D
		26M	-010B	001
		26N	-010B	001
		27C	-001A	RF
A292901305-008		26K	-010B	001
		26M	-010C	001
		27C	-001C	RF
A292901305-010		26M	-010E	001
		27C	-001F	RF
A292901305-012		26M	-010D	001
		26P	-010B	001
		27C	-001D	RF
A292901307-000		26Q	010A	001
		26S	010A	001
		26U	010A	001
		27D	-001A	RF
A292901307-002		26Q	-010B	001
		26U	-010B	001
		27D	-001B	RF
A292901307-006		26U	-010C	001
		26V	010A	001
		27D	-001C	RF
A292901307-008		26U	-010D	001
		27D	-001D	RF
A292901309-000		26R	010A	001
		27E	-001A	RF
A292901309-002		26R	-010B	001
		27E	-001B	RF
A292901309-004		26R	-010D	001
		27E	-001D	RF
A292901309-008		26R	-010C	001
		27E	-001C	RF
A292901309-010		26R	-010F	001
		27E	-001F	RF
A292901309-012		26R	-010E	001
		27E	-001E	RF

- ITEM NOT ILLUSTRATED

ALPHA/NUMERIC INDEX

PART NUMBER	AIRLINE STOCK NUMBER	FIG NUMBER	ITEM NUMBER	TOTAL REQ'D
A292901310-000		26C	350A	001
		26D	350A	001
		26E	350A	001
		26F	350A	001
		26G	350A	001
		26H	130A	001
		26J	350A	001
		26K	350A	001
		26L	130A	001
		26M	350A	001
		26N	350A	001
		26P	350A	001
		26Q	390A	001
		26R	350A	001
		26T	350A	001
A292901310-002		26Q	-390B	001
		26S	390A	001
		26U	390A	001
		26V	220A	001
A292901390-000		31A	010A	001
		31B	010A	001
		31C	010B	001
A292901390-004		31C	010A	001
A3-254-0012-202		19A	-260E	001
		19B	-210C	001
		19C	-260B	001
		19D	-370B	001
		19E	270A	001
		19F	290A	001
		19H	390A	001
		19J	350A	001
A3-254-0012-204		19E	-270E	001
		19F	-290B	001
A3-254-0012-206		19A	260A	001
		19D	-370C	001

- ITEM NOT ILLUSTRATED

ALPHA/NUMERIC INDEX

PART NUMBER	AIRLINE STOCK NUMBER	FIG NUMBER	ITEM NUMBER	TOTAL REQ'D
		19E	-270B	001
A3-254-0012-220		19E	-270C	001
A3-254-0012-222		19F	-290E	001
A3-254-0012-228		19E	-270D	001
A3-254-0012-230		19F	-290D	001
A3-254-0012-232		19F	-290C	001
		19H	-390B	001
A3-254-0012-236		19F	-290F	001
A3-254-0012-238		19F	-290G	001
A3-254-0012-240		19H	-390C	001
A3-254-0012-242		19H	-390D	001
A3-254-0012-244		19H	-390E	001
A3-254-0012-332		19E	-270F	001
		19K	350A	001
A3-254-0024-100		12J	110A	001
A3-254-0024-152		12G	155A	001
		12H	180A	001
A3-381-0002-01		23A	040A	001
		23	040A	001
A3-929-0001-01		05A	100A	001
		05B	080A	001
		05C	090A	001
		05D	090A	001
		05F	090A	001
		05G	090A	001
		05H	090A	001
		05J	090A	001
		5	110A	001
A3-929-0009-001		19E	-290B	001
		19F	360A	001
		19H	-300B	001
A3-929-0009-002		19E	-290E	001
		19F	-360B	001
		19H	300A	001
A3-929-0009-003		19E	290A	001

- ITEM NOT ILLUSTRATED

ALPHA/NUMERIC INDEX

PART NUMBER	AIRLINE STOCK NUMBER	FIG NUMBER	ITEM NUMBER	TOTAL REQ'D
		19F	-360C	001
		19H	-300C	001
		19J	420A	001
		19K	420A	001
A3-929-0009-01S		19E	-290D	001
A3-929-0009-03M		19E	-290C	001
A321200301-200		21A	240A	001
		21B	110A	001
		21	270A	001
A321200303-200		21	130A	001
A321200303-202		21	-130B	001
A321200303-212		21A	130A	001
		21B	130A	001
		21	-130D	001
A321200303-214		21A	-130B	001
		21	-130C	001
A321200304-200		21A	170A	001
		21B	170A	001
		21	-180B	001
A325200401-200		06S	300A	001
		07H	210A	001
A325232319-366		06S	340A	001
A325232319-374		06S	330A	001
A325232319-412		06S	350A	001
A325400202-500		13A	-020B	002
		13B	020A	002
		13C	020A	002
		13D	020A	002
		13E	020A	002
		13F	020A	002
		13G	020A	002
		13H	020A	002
		13J	-020C	002
		13K	020A	002
		13L	020A	002

- ITEM NOT ILLUSTRATED

ALPHA/NUMERIC INDEX

PART NUMBER	AIRLINE STOCK NUMBER	FIG NUMBER	ITEM NUMBER	TOTAL REQ'D
		13M	020A	002
		13	-020C	001
A325400202-506		13E	-020B	002
		13J	-020D	002
A325400202-508		13K	-020B	002
A325400202-510		13D	-020B	002
A325400202-514		13J	020A	002
		13M	-020B	002
A325400202-518		13E	-020C	002
		13J	-020B	002
		13L	-020B	002
A325400202-522		13G	-020B	002
A325400228-518		9	010A	001
A325400401-000		9	020A	001
A325400401-204		9	030A	001
A325400405-210		12J	080A	001
A325400405-620		12J	150A	001
A325400405-720		12J	180A	001
A325400405-810		12J	050A	001
A325400406-006		12J	070A	001
A325400406-610		12J	060A	001
A325400410-500		19A	-230D	002
		19B	041A	002
		19C	230A	002
		19E	-262C	002
		19F	270A	002
		19H	285A	002
A325400410-502		19A	230A	002
		19D	280A	002
		19E	262A	002
A325400410-504		19A	-230B	002
		19E	262B	002
		19F	-270B	002
A325400410-506		19A	-230C	002
A325400410-512		19F	-270C	002

- ITEM NOT ILLUSTRATED

ALPHA/NUMERIC INDEX

PART NUMBER	AIRLINE STOCK NUMBER	FIG NUMBER	ITEM NUMBER	TOTAL REQ'D
		19H	-285B	002
A325400411-000		19A	231A	002
		19B	191A	002
		19C	220A	002
		19D	300A	002
		19E	160A	002
		19F	160A	002
		19H	160A	002
		19J	220A	002
		19K	200A	002
		19	191A	002
A325400411-200		19A	-233A	001
		19B	-193A	001
		19C	-223A	001
		19D	-303A	001
		19E	-163A	001
		19F	-163A	001
		19H	-170A	001
		19J	-230A	001
		19K	-210A	001
		19	-193A	001
A325400411-202		19A	245A	001
		19B	201A	001
		19C	210A	001
		19D	340A	001
		19E	030A	001
		19F	030A	001
		19G	020A	001
		19H	030A	001
		19J	030A	001
		19K	030A	001
		19	205A	001
A325400416-200		19A	180A	001
		19B	180A	001
		19C	180A	001

- ITEM NOT ILLUSTRATED

ALPHA/NUMERIC INDEX

PART NUMBER	AIRLINE STOCK NUMBER	FIG NUMBER	ITEM NUMBER	TOTAL REQ'D
		19D	250A	001
		19E	090A	001
		19F	090A	001
		19H	090A	001
		19J	150A	001
		19	180A	001
A325400416-516		19K	150A	001
A325400419-500		19J	090A	001
A325400419-504		19K	100A	001
A325400420-206		17A	-050B	001
		17F	140A	001
A325400420-208		17A	-090B	001
		17F	150A	001
A325400420-210		17A	-047A	AR
			-105A	002
		17F	160A	002
A325400422-004		18	-060E	001
A325400422-006		18	-060D	001
A325400426-205		16D	140A	001
A325400431-204		16B	-170B	001
		16C	160A	001
		16D	160A	001
		16E	170A	001
		16F	130A	001
A325400455-500		05A	-120H	001
A325400455-504		05A	120A	001
A325400455-506		05A	-120D	001
A325400455-518		05A	-120B	001
A325400455-522		05A	-120C	001
A325400455-600		05A	130A	001
A325400455-606		05A	-130B	001
A325400455-612		05A	-130C	001
A325400460-500		05A	-120F	001
		05D	-140C	001
		05F	-150B	001

- ITEM NOT ILLUSTRATED

ALPHA/NUMERIC INDEX

PART NUMBER	AIRLINE STOCK NUMBER	FIG NUMBER	ITEM NUMBER	TOTAL REQ'D
A325400460-512		05A	-120E	001
		05D	-140B	001
		05F	150A	001
A325400460-518		05A	-120G	001
		05D	140A	001
A325400460-528		05F	-150C	001
A325400460-530		05F	-150D	001
A325400460-532		05F	-150E	001
A325400460-540		05F	-150F	001
A325400461-500		05A	-130E	001
		05D	-150C	001
		05F	-160B	001
A325400461-512		05A	-130D	001
		05D	-150B	001
		05F	160A	001
A325400461-518		05A	-130F	001
		05D	150A	001
A325400461-526		05F	-160C	001
A325400461-528		05F	-160D	001
A325400461-530		05F	-160E	001
A325400462-200		05A	-160C	001
		05D	180A	001
		05F	190A	001
A325400463-000		05A	-140B	001
		05D	160A	001
		05F	170A	001
A325400470-204		49	280A	001
A325400471-500		48D	520A	001
		48F	440A	001
A325400471-506		48F	-440B	001
		48N	360A	001
A325400472-204		07G	260A	001
		07N	310A	001
		07W	320A	001
A325400472-208		15M	340A	001

- ITEM NOT ILLUSTRATED

ALPHA/NUMERIC INDEX

PART NUMBER	AIRLINE STOCK NUMBER	FIG NUMBER	ITEM NUMBER	TOTAL REQ'D
A325432202-700		13U	290A	002
A338100212-200		15C	-184A	001
		15G	-239A	001
		15H	350A	001
		15L	-335A	001
		15Q	-400A	001
A338100302-018		22K	190A	001
A338100302-200		22A	180A	001
		22B	250A	001
		22J	170A	001
		22	200A	001
A338100308-200		15B	110A	008
		15C	110A	008
		15E	100A	008
		15F	170A	008
		15G	170A	008
		15H	170A	008
		15J	170A	008
		15K	170A	008
		15L	-170B	008
			170A	006
		15M	170A	006
		15N	170A	006
		15P	170A	006
		15Q	170A	006
		15R	350A	008
		15T	230A	008
		15U	230A	008
		15	-086A	008
A338100311-200		15B	100A	002
		15C	100A	002
		15E	090A	002
		15F	160A	002
		15G	160A	002
		15H	160A	002

- ITEM NOT ILLUSTRATED

ALPHA/NUMERIC INDEX

PART NUMBER	AIRLINE STOCK NUMBER	FIG NUMBER	ITEM NUMBER	TOTAL REQ'D
		15J	160A	002
		15K	160A	002
		15T	220A	002
A338100312-000		22D	200A	001
		22E	200A	001
		22F	220A	001
		22G	180A	001
		22H	220A	001
		22K	310A	001
A338100312-004		22D	120A	001
		22E	120A	001
		22F	140A	001
		22G	100A	001
		22H	140A	001
		22K	360A	001
A338100312-200		22D	140A	001
		22E	140A	001
		22F	160A	001
		22G	120A	001
		22H	160A	001
		22K	350A	001
A338100312-202		22D	180A	001
		22E	180A	001
		22F	200A	001
		22G	160A	001
		22H	200A	001
		22K	340A	001
A338100314-202		15R	170A	004
A338100315-501		15R	160A	001
A338199005-200		15B	200A	001
		15	190A	001
A338300010-236		23B	020A	001
		23D	020A	001
		23	-040B	001
A338300010-244		23B	120A	001

- ITEM NOT ILLUSTRATED

ALPHA/NUMERIC INDEX

PART NUMBER	AIRLINE STOCK NUMBER	FIG NUMBER	ITEM NUMBER	TOTAL REQ'D
		23D	120A	001
A338300010-248		23C	020A	001
A3837232923000		23A	170A	001
		23C	160A	001
		23	180A	001
A392500305-000		26A	-150B	001
		26B	-190C	001
		26C	190A	001
		26D	190A	001
		26E	190A	001
		26F	190A	001
		26G	190A	001
		26H	070A	001
		26J	190A	001
		26K	190A	001
		26L	070A	001
		26M	190A	001
		26N	190A	001
		26P	190A	001
		26Q	250A	001
		26R	230A	001
		26S	250A	001
		26T	190A	001
		26U	250A	001
		26V	080A	001
		26	-150B	001
A392500305-002		26B	190A	001
A392500307-200		14A	060A	001
		14B	060A	001
		14	060A	001
A392900190-000		05C	-090B	001
		05G	-090B	001
A392900190-002		05C	-090C	001
		05G	-090C	001
		05H	-090B	001

- ITEM NOT ILLUSTRATED

ALPHA/NUMERIC INDEX

PART NUMBER	AIRLINE STOCK NUMBER	FIG NUMBER	ITEM NUMBER	TOTAL REQ'D
A425400201-200		10A	020A	001
A425400404-558		20C	120A	001
A425400461-600		12G	150A	001
		12H	-170C	001
A425400461-602		12H	170A	001
A425400461-612		12G	-150D	001
A425400461-632		12G	-150B	001
A425400461-634		12G	-150L	001
A425400461-640		12H	-170B	001
A425400461-642		12G	-150C	001
A425400461-644		12G	-150K	001
A425400461-654		12G	-150F	001
A425400461-658		12G	-150H	001
A425400461-666		12G	-150G	001
A425400461-672		12G	-150E	001
A425400461-682		12G	-150J	001
A425400461-692		12H	-170D	001
A425400461-694		12H	-170F	001
A425400461-696		12H	-170E	001
A425400461-710		12J	100A	001
A425400466-502		12G	-120D	002
A425400466-504		12G	120A	002
		12H	-120C	002
A425400466-524		12G	-120B	002
A425400466-526		12G	-120L	002
A425400466-532		12H	-120B	002
A425400466-534		12G	-120C	002
A425400466-536		12G	-120K	002
A425400466-546		12G	-120F	002
A425400466-552		12G	-120H	002
A425400466-558		12H	120A	002
A425400466-562		12G	-120G	002
A425400466-568		12G	-120E	002
A425400466-578		12G	-120J	002
A425400466-588		12H	-120D	002

- ITEM NOT ILLUSTRATED

ALPHA/NUMERIC INDEX

PART NUMBER	AIRLINE STOCK NUMBER	FIG NUMBER	ITEM NUMBER	TOTAL REQ'D
A425400466-590		12H	-120E	002
A425400466-592		12H	-120F	002
A425400467-702		12G	-090D	001
A425400467-704		12G	090A	001
		12H	-090C	001
A425400467-724		12G	-090B	001
A425400467-726		12G	-090L	001
A425400467-732		12H	-090B	001
A425400467-734		12G	-090C	001
A425400467-736		12G	-090K	001
A425400467-746		12G	-090F	001
A425400467-752		12G	-090H	001
A425400467-758		12H	090A	001
A425400467-762		12G	-090G	001
A425400467-768		12G	-090E	001
A425400467-778		12G	-090J	001
A425400467-788		12H	-090D	001
A425400467-790		12H	-090E	001
A425400467-794		12H	-090F	001
A425400468-502		12G	-130D	001
A425400468-504		12G	130A	001
		12H	-140C	001
A425400468-524		12G	-130B	001
A425400468-526		12G	-130L	001
A425400468-532		12H	-140B	001
A425400468-534		12G	-130C	001
A425400468-536		12G	-130K	001
A425400468-546		12G	-130F	001
A425400468-552		12G	-130H	001
A425400468-558		12H	140A	001
A425400468-562		12G	-130G	001
A425400468-568		12G	-130E	001
A425400468-578		12G	-130J	001
A425400468-590		12H	-140D	001
A425400468-592		12H	-140F	001

- ITEM NOT ILLUSTRATED

ALPHA/NUMERIC INDEX

PART NUMBER	AIRLINE STOCK NUMBER	FIG NUMBER	ITEM NUMBER	TOTAL REQ'D
A425400468-594		12H	-140E	001
A425400488-062		48G	450A	002
A425400488-064		48A	490A	002
A425400488-066		48M	440A	002
A425400488-262		48A	495A	001
		48G	460A	001
A425400488-266		48M	450A	001
A438100220-202		15L	160A	002
		15M	160A	002
		15N	160A	002
		15P	160A	002
		15Q	160A	002
		15R	340A	002
		15U	220A	002
		15	-084A	002
A438100255-206		15T	390A	001
		15U	390A	001
A8-254-2014-941		11A	096A	001
		11B	106A	001
		11C	106A	001
		11D	106A	001
		11E	106A	001
		11F	106A	001
		11G	106A	001
		11H	106A	001
		11J	106A	001
		11K	106A	001
		11L	106A	001
		11M	106A	001
		11N	106A	001
		11P	106A	001
		11Q	106A	001
		11R	116A	001
		11	096A	001
A8-254-2015-011		11A	090B	001

- ITEM NOT ILLUSTRATED

ALPHA/NUMERIC INDEX

PART NUMBER	AIRLINE STOCK NUMBER	FIG NUMBER	ITEM NUMBER	TOTAL REQ'D
		11B	100B	001
		11C	100B	001
		11D	100B	001
		11E	100B	001
		11F	100B	001
		11G	100B	001
		11H	100B	001
		11J	100B	001
		11K	100B	001
		11L	100B	001
		11M	100B	001
		11N	100B	001
		11P	100B	001
		11Q	100B	001
		11	090B	001
A8-254-2015-013		11R	110A	001
A8-254-2015-931		11A	094A	001
		11B	104A	001
		11C	104A	001
		11D	104A	001
		11E	104A	001
		11F	104A	001
		11G	104A	001
		11H	104A	001
		11J	104A	001
		11K	104A	001
		11L	104A	001
		11M	104A	001
		11N	104A	001
		11P	104A	001
		11Q	104A	001
		11R	114A	001
		11	094A	001
A8-254-2015-951		11A	092A	001
		11B	102A	001

- ITEM NOT ILLUSTRATED

ALPHA/NUMERIC INDEX

PART NUMBER	AIRLINE STOCK NUMBER	FIG NUMBER	ITEM NUMBER	TOTAL REQ'D
		11C	102A	001
		11D	102A	001
		11E	102A	001
		11F	102A	001
		11G	102A	001
		11H	102A	001
		11J	102A	001
		11K	102A	001
		11L	102A	001
		11M	102A	001
		11N	102A	001
		11P	102A	001
		11Q	102A	001
		11R	112A	001
		11	092A	001
A825100-3		18	-170B	001
A825400441-000		17G	030A	002
A825400501-210		07V	-300A	001
		19B	-290A	001
		19E	-400A	001
		49C	-320A	008
A825400501-212		07V	-310A	001
		19A	-350A	001
		19B	-300A	001
		19E	-410A	001
		19F	-480A	001
		19H	-470A	001
		49C	-330A	001
A825400501-214		19A	-340C	001
		19B	-290C	001
		19E	-400B	001
		19F	-470A	001
		19H	-460A	001
A825400503-000		11R	070A	002
A825400503-200		11R	-090A	001

- ITEM NOT ILLUSTRATED

ALPHA/NUMERIC INDEX

PART NUMBER	AIRLINE STOCK NUMBER	FIG NUMBER	ITEM NUMBER	TOTAL REQ'D
A825400503-204		11R	-080A	001
ABS0201-06G		14A	090A	001
		14	090A	001
ABS0201-06K		14A	-090B	001
		14B	090A	001
ABS0237-02		26V	-390A	002
ABS0237-03		27D	-040A	006
		27E	-040A	004
		31A	-100A	003
		31B	-100A	003
		31C	-100A	009
		31	-100A	003
ABS0306B01-2-11		05A	080A	AR
		5	090A	AR
ABS0307A2-11		07A	190A	AR
		07B	180A	AR
		07C	170A	AR
		07D	180A	AR
		07E	160A	AR
		07F	190A	AR
		07G	170A	AR
		07H	150A	AR
		07J	-180B	AR
			180A	AR
		07K	170A	AR
		07L	170A	AR
		07M	160A	AR
		07N	210A	AR
		07P	210A	AR
		07Q	210A	AR
		07R	210A	AR
		07S	200A	AR
		07T	200A	AR
		07U	200A	AR
		07V	210A	AR

- ITEM NOT ILLUSTRATED

ALPHA/NUMERIC INDEX

PART NUMBER	AIRLINE STOCK NUMBER	FIG NUMBER	ITEM NUMBER	TOTAL REQ'D
		07W	210A	AR
		07X	210A	AR
		07Y	200A	AR
		07Z	210A	AR
		49A	210A	AR
		49B	210A	AR
		49C	210A	AR
		49	210A	AR
		7	190A	AR
ABS0364A10S		27A	140A	002
		27B	140A	002
		27C	140A	002
		27D	100A	001
		27E	080A	001
		27	140A	002
ABS0364B26P		27	450A	001
ABS0364B26PC		26C	356A	001
		26D	400A	001
		26E	400A	001
		26F	400A	001
		26G	400A	001
		26J	400A	001
		26K	400A	001
		26M	400A	001
		26N	400A	001
		26P	400A	001
		26Q	440A	001
		26R	400A	001
		26S	440A	001
		26T	400A	001
		26U	440A	001
		26V	250A	001
		27	-450B	001
ABS0364C		26C	-357A	001
		26D	-410A	001

- ITEM NOT ILLUSTRATED

ALPHA/NUMERIC INDEX

PART NUMBER	AIRLINE STOCK NUMBER	FIG NUMBER	ITEM NUMBER	TOTAL REQ'D
		26E	-410A	001
		26F	-410A	001
		26G	-410A	001
		26J	-410A	001
		26K	-410A	001
		26M	-410A	001
		26N	-410A	001
		26P	-410A	001
		26Q	-450A	001
		26R	-410A	001
		26S	-450A	001
		26T	-410A	001
		26U	-450A	001
		26V	260A	001
		27A	150A	002
		27B	150A	002
		27C	150A	002
		27D	110A	001
		27E	090A	001
		27	150A	002
			460A	001
ABS0364D		26C	-358A	001
		26D	-420A	001
		26E	-420A	001
		26F	-420A	001
		26G	-420A	001
		26J	-420A	001
		26K	-420A	001
		26M	-420A	001
		26N	-420A	001
		26P	-420A	001
		26Q	-460A	001
		26R	-420A	001
		26S	-460A	001
		26T	-420A	001

- ITEM NOT ILLUSTRATED

ALPHA/NUMERIC INDEX

PART NUMBER	AIRLINE STOCK NUMBER	FIG NUMBER	ITEM NUMBER	TOTAL REQ'D
		26U	-460A	001
		26V	270A	001
		27A	160A	002
		27B	160A	002
		27C	160A	002
		27D	120A	001
		27E	100A	001
		27	160A	002
			470A	001
ABS0365-08-1		15B	075A	003
		15C	075A	003
		15E	075A	003
		15F	140A	003
		15G	140A	003
		15H	140A	003
		15J	140A	003
		15K	140A	003
		15L	140A	003
		15M	140A	003
		15N	140A	003
		15P	140A	003
		15Q	140A	003
		15R	150A	003
		15T	160A	003
		15U	160A	003
ABS0386WF24		27D	-350A	001
ABS0388B09A		27D	-360A	001
		27E	550A	001
ABS0388B15A		31A	060A	001
		31B	060A	001
		31C	060A	001
ABS0616-1-08		22G	300A	003
		22H	340A	003
		22K	130A	003
		22	220A	003

- ITEM NOT ILLUSTRATED

ALPHA/NUMERIC INDEX

PART NUMBER	AIRLINE STOCK NUMBER	FIG NUMBER	ITEM NUMBER	TOTAL REQ'D
ABS0616-1-16		23B	230A	AR
		23	270A	002
ABS0616A1-08A		22D	320A	AR
		22G	-300B	003
		22H	-340B	003
		22K	-130B	003
		22	-220B	003
ABS0616A1-16A		23B	-230B	AR
		23D	-200A	AR
		23	-270B	AR
ABS0619-08-01		22G	310A	001
		22H	350A	001
		22K	135A	001
		22	230A	001
ABS0619-12-02		23B	220A	001
		23	280A	AR
ABS0619A08C01		22D	310A	AR
		22G	-310B	001
		22H	-350B	001
		22K	135B	001
		22	-230B	001
ABS0638A12		27A	060A	001
		27B	060A	001
		27C	060A	001
		27E	060A	001
		27	060A	001
ABS0638A14		27A	230A	001
		27B	230A	001
		27C	230A	001
		27D	060A	001
			420A	001
		27E	300A	001
		27	250A	001
ABS0638A20		31A	030A	001
		31B	030A	001

- ITEM NOT ILLUSTRATED

ALPHA/NUMERIC INDEX

PART NUMBER	AIRLINE STOCK NUMBER	FIG NUMBER	ITEM NUMBER	TOTAL REQ'D
		31C	030A	001
ABS0638B08		27	-520B	001
ABS0638B14		26C	355A	001
		26D	390A	001
		26E	390A	001
		26F	390A	001
		26G	390A	001
		26J	390A	001
		26K	390A	001
		26M	390A	001
		26N	390A	001
		26P	390A	001
		26Q	430A	001
		26R	390A	001
		26S	430A	001
		26T	390A	001
		26U	430A	001
		26V	240A	001
		27	440A	001
ABS0638C10		27A	180A	001
		27B	180A	001
		27C	180A	001
		27D	280A	001
		27E	220A	001
		27	180A	001
ABS0638C16		31	060A	001
ABS0638C22		27A	030A	001
		27B	030A	001
		27C	030A	001
		27D	530A	001
		27E	410A	001
		27	030A	001
ABS0656A1B1		27B	420A	001
		27C	420A	001
		27D	090A	002

- ITEM NOT ILLUSTRATED

ALPHA/NUMERIC INDEX

PART NUMBER	AIRLINE STOCK NUMBER	FIG NUMBER	ITEM NUMBER	TOTAL REQ'D
		27E	540A	002
ABS0704-3-22		11	040A	026
ABS0704-6-50		06A	035A	002
		06E	-030B	002
		06J	031A	002
		06M	031A	002
		06Q	-030B	002
		06R	-030B	004
		06U	-030B	004
		06V	-030B	004
		06W	050A	004
		06X	030A	004
		06Y	030A	004
		06Z	030A	002
		07A	070A	004
		07B	070A	004
		07C	070A	004
		07D	070A	004
		07E	070A	004
		07F	100A	004
		07G	070A	004
		07H	050A	004
		07J	070A	004
		07K	070A	004
		07L	070A	004
		07M	060A	004
		07N	070A	004
		07P	070A	004
		07Q	070A	004
		07R	070A	004
		07S	060A	004
		07T	060A	004
		07U	060A	004
		07V	060A	004
		07W	060A	004

- ITEM NOT ILLUSTRATED

ALPHA/NUMERIC INDEX

PART NUMBER	AIRLINE STOCK NUMBER	FIG NUMBER	ITEM NUMBER	TOTAL REQ'D
ABS0705-6-50		07X	060A	004
		07Y	060A	004
		07Z	060A	004
		48A	030A	004
		48B	040A	002
		48C	040A	002
		48D	030A	002
		48E	040A	002
		48F	040A	002
		48G	040A	002
		48H	040A	002
		48J	040A	002
		48K	040A	002
		48L	040A	002
		48M	040A	002
		48N	040A	002
		48	030A	004
		49A	060A	004
		49B	060A	004
		49C	060A	004
		49	060A	004
		7	070A	004
		06A	033A	002
		06E	-035B	002
		06J	035A	002
		06M	035A	002
		06Q	-035B	002
		06Z	035A	002
		48B	050A	002
		48C	050A	002
		48D	035A	002
		48E	050A	002
		48F	050A	002
		48G	050A	002
		48H	050A	002

- ITEM NOT ILLUSTRATED

ALPHA/NUMERIC INDEX

PART NUMBER	AIRLINE STOCK NUMBER	FIG NUMBER	ITEM NUMBER	TOTAL REQ'D
		48J	050A	002
		48K	050A	002
		48L	050A	002
		48M	050A	002
		48N	050A	002
ABS0706-25-16		11A	150A	008
		11B	170A	008
		11C	170A	008
		11D	160A	008
		11E	160A	008
		11F	160A	008
		11G	160A	008
		11H	160A	008
		11J	160A	008
		11K	160A	008
		11L	180A	008
		11M	180A	008
		11N	180A	008
		11P	180A	008
		11Q	180A	008
		11R	170A	008
		11	150A	008
ABS1019-003ASC		27D	-230A	001
ABS1019-005A		27D	-240A	001
ABS1238-26-15B		14A	-090C	001
		14B	-090B	001
ABS5006-2F		18	140A	AR
ABS5662B01		22D	-330A	AR
		22	-280A	AR
		23B	-240A	AR
		23D	-210A	AR
ABS5768A500		13A	-063A	AR
		13C	-063A	AR
		13D	-065A	AR
		13E	-063A	AR

- ITEM NOT ILLUSTRATED

ALPHA/NUMERIC INDEX

PART NUMBER	AIRLINE STOCK NUMBER	FIG NUMBER	ITEM NUMBER	TOTAL REQ'D
		13G	-063A	AR
		13H	-063A	AR
		13J	-64A	AR
		13N	-024A	AR
		13P	-030B	AR
		13Q	-045A	AR
		13	-063A	AR
AE3663630G0097		22K	140A	001
AE3663630G0113		22A	100A	001
		22B	110A	001
		22	-100B	001
AE3663630G0116		22	100A	001
AE3663630G0141		22F	080A	001
		22H	080A	001
AE3663630G0207		22K	150A	001
AE3663630H0082		22E	260A	001
AE3663630H0092		22A	150A	001
		22B	180A	001
		22C	090A	001
		22J	100A	001
		22	170A	001
AE3663630H0174		22D	260A	001
		22F	280A	001
		22G	240A	001
		22H	280A	001
		22K	090A	001
AE3663631G0114		22E	310A	001
AE6471G0133-079		22C	040A	001
AE6471G0221-210		22C	060A	001
		22F	090A	001
		22H	090A	001
AE6471H0187-266		22D	280A	001
		22E	280A	001
		22F	300A	001
		22G	260A	001

- ITEM NOT ILLUSTRATED

ALPHA/NUMERIC INDEX

PART NUMBER	AIRLINE STOCK NUMBER	FIG NUMBER	ITEM NUMBER	TOTAL REQ'D
		22H	300A	001
		22K	100A	001
AE6702-58		06J	-210F	001
		06L	-210D	001
AE6702-85		06J	210A	001
AFR1535DA8-84		13Q	-040L	001
AFR1550DA8-87		13S	-040E	001
AH5702-16		06C	-200D	001
AH5702-25		06A	-170B	001
		06B	-170G	001
		06C	200A	001
		48E	230A	001
		48J	-190E	001
		6	-155C	001
AH5702-29		6	155A	001
AH5702-51		06C	-200E	001
		06D	-200B	001
		6	-155B	001
AH5702-85		06A	170A	001
		06B	170A	001
		06C	-200C	001
		48D	-170F	001
		48E	-230F	001
		6	-155E	001
AIRFL00R97-8-15		13B	060A	AR
		13E	-060H	001
		13N	-020C	001
		13V	-060D	AR
		13	-060C	001
AIRFL00R97-8-3		13	-060H	001
AIRFL00R97-8-8		13D	-060D	001
AM767B		11A	125A	001
		11B	145A	001
		11C	145A	001
		11D	135A	001

- ITEM NOT ILLUSTRATED

ALPHA/NUMERIC INDEX

PART NUMBER	AIRLINE STOCK NUMBER	FIG NUMBER	ITEM NUMBER	TOTAL REQ'D
		11E	135A	001
		11F	135A	001
		11G	130A	001
		11H	135A	001
		11J	130A	001
		11K	135A	001
		11L	155A	001
		11M	150A	001
		11N	150A	001
		11P	150A	001
		11R	120A	001
		11	125A	001
AN415-5		15B	120A	004
		15C	120A	004
		15E	110A	004
		15F	180A	004
		15G	180A	004
		15H	180A	004
		15J	180A	004
		15K	180A	004
		15N	180A	002
		15T	240A	004
AN565B6H4		11A	015A	002
		11B	020A	002
		11C	020A	002
		11D	020A	002
		11E	020A	002
		11F	020A	002
		11G	020A	002
		11H	020A	002
		11J	020A	002
		11K	020A	002
		11L	020A	002
		11M	020A	002
		11N	020A	002

- ITEM NOT ILLUSTRATED

ALPHA/NUMERIC INDEX

PART NUMBER	AIRLINE STOCK NUMBER	FIG NUMBER	ITEM NUMBER	TOTAL REQ'D
		11P	020A	002
		11Q	-020A	002
		11R	020A	002
		11	-015A	002
AN924-6J		22A	060A	002
		22B	060A	002
		22	060A	002
AN960-8		17	040A	002
AN960C10		15A	035A	013
		15	035A	013
		19A	243A	004
		19B	205A	004
		19C	255A	004
		19D	320A	004
		19	203A	004
AN960C10L		07A	270A	001
		07B	200A	001
		07C	220A	001
		22A	185A	AR
		22J	150A	001
		22	192A	002
		23	035A	002
			150A	003
		2	110A	003
		7	230A	001
AN960C4		19A	124A	002
			134A	002
		19B	124A	002
			134A	002
		19C	124A	002
			134A	002
		19D	140A	002
			200A	002
		19	124A	002
			134A	002

- ITEM NOT ILLUSTRATED

ALPHA/NUMERIC INDEX

PART NUMBER	AIRLINE STOCK NUMBER	FIG NUMBER	ITEM NUMBER	TOTAL REQ'D
		26B	420A	008
		26	450A	008
		2	320A	004
AN960C416		2	230A	001
AN960C416L		22A	020A	003
		22	020A	003
AN960C516		18	175A	002
AN960C6		14	050A	004
		16	135A	002
		18	240A	002
		2	300A	004
AN960C8		05A	180A	002
		06A	-190B	009
			190A	013
		06B	-190B	015
			190A	019
		06C	220A	013
		06D	-220C	009
			220A	013
		06E	-220B	019
		06P	-245A	004
		06X	-227A	004
		07A	310A	004
		07Y	340A	002
			380A	002
		13A	040A	AR
		15A	030A	002
		15	030A	002
		16	130A	AR
		17A	040A	006
			080A	002
			120A	018
		17B	040A	002
			080A	002
			120A	018

- ITEM NOT ILLUSTRATED

ALPHA/NUMERIC INDEX

PART NUMBER	AIRLINE STOCK NUMBER	FIG NUMBER	ITEM NUMBER	TOTAL REQ'D
		17	080A	002
			120A	018
		18	120A	002
			160A	016
		19A	070A	021
		19B	070A	AR
		19C	070A	023
		19D	060A	025
		19	070A	AR
		22A	080A	AR
		23	-130B	006
			130A	011
		26A	030A	012
			340A	001
		26B	030A	012
		26	030A	012
		2	270A	004
		48A	-235A	004
		48D	-195A	004
		48	-195A	004
		4	030A	013
		6	-170B	015
			170A	019
AN960C916L		22A	050A	002
		22	050A	002
AN970-6		15P	350A	001
AR138-5-2		16A	060A	001
		16B	060A	001
		16C	050A	001
		16D	050A	001
		16E	060A	001
		16	060A	001
		9	060A	001
AR146-5-2		16C	-050B	001
AR197		11	080A	001

- ITEM NOT ILLUSTRATED

ALPHA/NUMERIC INDEX

PART NUMBER	AIRLINE STOCK NUMBER	FIG NUMBER	ITEM NUMBER	TOTAL REQ'D
AR197-3		06F	300A	001
		06J	370A	001
		06L	380A	001
		06T	380A	001
		06V	330A	001
		06X	390A	001
		06Z	340A	001
		11A	080A	001
		11B	090A	001
		11C	090A	001
		11D	090A	001
		11E	090A	001
		11F	090A	001
		11G	090A	001
		11H	090A	001
		11J	090A	001
		11K	090A	001
		11L	090A	001
		11M	090A	001
		11N	090A	001
		11P	090A	001
		11Q	090A	001
		11	-080B	001
		48C	380A	001
		48G	360A	001
		48H	440A	001
		48L	440A	001
AR4714-1		31B	200A	002
		31C	200A	002
AR4714-3		31B	270A	001
		31C	270A	001
AR9262-3W1D599		22K	010A	001
AR9840-3W31D544		22C	010A	001
		22F	-010B	001
		22H	010A	001

- ITEM NOT ILLUSTRATED

ALPHA/NUMERIC INDEX

PART NUMBER	AIRLINE STOCK NUMBER	FIG NUMBER	ITEM NUMBER	TOTAL REQ'D
AR9840-5W12D544		22F	-010C	001
		22H	-010B	001
AR9840-5W31D544		22F	010A	001
ASNA0032-028		21	050A	003
			051A	001
		23A	030A	008
		23C	130A	003
		23	-030B	005
			030A	AR
			031A	002
ASNA0032-052		21	190A	002
ASNA0032-112		22A	130A	002
		22B	140A	002
		22C	160A	002
		22J	060A	002
		22	130A	002
ASNA0033-022		23C	120A	001
ASNA0033-036		21A	040A	003
			050A	001
		21B	040A	003
			050A	001
		21	-050B	003
			-051B	001
		23B	030A	005
		23C	030A	003
		23D	030A	005
		23	-031B	003
			-031C	004
ASNA0033-052		21A	180A	002
		21B	180A	002
		21	-190B	002
ASNA0033-112		22D	050A	002
		22E	050A	002
		22F	040A	002
		22G	030A	002

- ITEM NOT ILLUSTRATED

ALPHA/NUMERIC INDEX

PART NUMBER	AIRLINE STOCK NUMBER	FIG NUMBER	ITEM NUMBER	TOTAL REQ'D
ASNA0113-40ADL		22H	040A	002
		22K	060A	002
		05A	190A	013
		05E	140A	016
		06S	280A	008
		07H	250A	008
		12A	180A	010
		12B	180A	010
		12C	-180B	015
			180A	010
		12D	180A	010
			185A	005
		12E	220A	010
		12F	220A	010
		12G	230A	010
			235A	005
		12H	260A	010
		12J	250A	010
		12	100A	010
		13A	110A	007
		13B	120A	007
		13C	120A	007
		13D	120A	007
		13E	120A	007
		13F	130A	007
		13G	120A	008
		13H	130A	008
		13J	130A	AR
		13K	130A	007
		13L	130A	007
		13M	130A	007
		13N	140A	010
			220A	006
		13P	160A	010
			240A	006

- ITEM NOT ILLUSTRATED

ALPHA/NUMERIC INDEX

PART NUMBER	AIRLINE STOCK NUMBER	FIG NUMBER	ITEM NUMBER	TOTAL REQ'D
		13Q	160A	010
			240A	006
		13R	140A	010
			220A	006
		13S	160A	010
			240A	006
		13T	150A	010
		13U	180A	010
		13V	110A	007
		13W	070A	006
			180A	008
			185A	002
		13	110A	007
		15B	070A	003
		15C	-165A	002
			070A	003
			140A	AR
		15D	170A	011
		15E	070A	003
			130A	007
		15F	130A	003
			200A	007
		15G	-200B	010
			-225A	002
			130A	003
			200A	015
		15H	-200B	010
			-225A	002
			130A	003
			200A	015
		15J	130A	003
			200A	015
		15K	-200B	010
			-225A	002
			130A	003

- ITEM NOT ILLUSTRATED

ALPHA/NUMERIC INDEX

PART NUMBER	AIRLINE STOCK NUMBER	FIG NUMBER	ITEM NUMBER	TOTAL REQ'D
			200A	007
		15L	-200B	012
			130A	003
			200A	017
			205A	002
		15M	130A	003
			200A	017
			201A	001
		15N	130A	003
			200A	015
		15P	130A	003
			200A	017
		15Q	130A	003
			200A	009
		15R	140A	003
			210A	007
		15S	130A	011
		15T	150A	003
			380A	012
		15U	150A	003
			380A	012
		15	-030D	002
			-035C	012
		16B	190A	002
		16C	180A	002
		16D	180A	002
		16E	190A	002
		16F	180A	004
		17A	-040B	006
			-108A	006
			-125A	007
		17C	030A	009
		17D	030A	009
		17E	030A	009
		17F	180A	019

- ITEM NOT ILLUSTRATED

ALPHA/NUMERIC INDEX

PART NUMBER	AIRLINE STOCK NUMBER	FIG NUMBER	ITEM NUMBER	TOTAL REQ'D
ASNA0113-48ADL		17G	060A	025
		19E	-195A	002
		22K	280A	018
		26E	-292A	001
		26K	-292A	001
		26M	-295A	001
		26P	-295A	001
		26R	-312A	001
		05A	070A	012
		05B	070A	025
		05C	080A	025
		05D	080A	025
		05E	070A	025
		05F	080A	025
		05G	080A	025
		05H	080A	025
		05J	080A	025
		15B	030A	003
		15C	030A	003
		15E	030A	003
		15F	050A	003
		15G	050A	003
		15H	050A	003
		15J	050A	003
		15K	050A	003
		15L	050A	003
		15M	050A	003
		15N	050A	003
		15P	050A	003
		15Q	050A	003
		15R	060A	003
			190A	004
		15T	070A	003
			180A	004
		15U	070A	003

- ITEM NOT ILLUSTRATED

ALPHA/NUMERIC INDEX

PART NUMBER	AIRLINE STOCK NUMBER	FIG NUMBER	ITEM NUMBER	TOTAL REQ'D
			180A	004
		19J	130A	001
		19K	140A	001
		21A	100A	003
		21B	100A	003
		21	100A	003
		22C	210A	001
		22J	240A	001
		23	-150B	006
		26A	370A	006
			375A	002
		26B	350A	008
		26C	290A	AR
		26D	290A	002
		26E	290A	002
			291A	003
		26F	290A	002
		26G	290A	002
		26J	290A	002
		26K	290A	002
			295A	001
		26M	290A	002
		26N	290A	002
		26P	290A	002
		26Q	330A	002
		26R	310A	002
			315A	001
		26S	330A	002
		26T	290A	002
		26U	330A	002
		26V	530A	002
		26	380A	AR
		5	070A	025
B0040418-21		07G	250A	001
		07N	300A	001

- ITEM NOT ILLUSTRATED

ALPHA/NUMERIC INDEX

PART NUMBER	AIRLINE STOCK NUMBER	FIG NUMBER	ITEM NUMBER	TOTAL REQ'D
		07W	310A	001
B822-40-10		15C	-180B	001
		15D	-200D	001
		15F	-230D	001
		15G	-230D	001
		15H	-230B	001
		15K	-230C	001
		15L	230A	001
		15M	230A	001
		15	-070B	001
B822-40-10-11		15H	230A	001
		15L	-230D	001
B822-40-10-14		15G	-230G	001
B822K40-10		15H	-230C	001
B822K40-10-11		15B	170A	001
		15C	-180C	001
		15D	200A	001
		15G	-230B	001
		15	070A	001
BA21758		18	170A	001
BA24320A1		18	-170C	001
BACN10JC4		15P	360A	001
BR5000-506		19B	-230B	001
		19E	-360B	001
C00396-23W		15G	320A	001
		15H	320A	001
		15L	-320B	001
		15Q	380A	001
C1117		05F	175A	001
C922-35-10-00		15C	180A	001
		15D	-200B	001
		15E	160A	001
C922-35-10-11		15C	-180D	001
C922-35-10-13		15E	-160B	001
C922-45-10-00		15D	-200C	001

- ITEM NOT ILLUSTRATED

ALPHA/NUMERIC INDEX

PART NUMBER	AIRLINE STOCK NUMBER	FIG NUMBER	ITEM NUMBER	TOTAL REQ'D
		15F	230A	001
		15G	230A	001
C922-45-10-11		15G	-230H	001
C922-45-10-13		15G	-230C	001
C922-45-10-14		15G	-230F	001
CLE3013-5		15A	080A	001
		15F	-230B	001
D01F00		23	-010B	001
D02A00		23A	010A	001
		23	010A	001
D2127725521600		21A	190A	001
		21B	190A	001
		21	200A	001
D2527715622700		11P	190A	001
D2527811620000		19A	-340A	001
		19H	-460B	001
D2527811620400		19E	-400C	001
D2527811620600		19F	-470B	001
D2527811620800		19E	-400F	001
D2527811621600		19E	-400D	001
		19F	-470C	001
D2527811622200		19A	-340B	001
		19E	-400G	001
D2527811622400		19E	-400N	001
D2527811623000		19B	-290B	001
		19E	-400E	001
D2527811623200		19E	-400T	001
D2527811623800		19C	-340A	001
		19F	-470D	001
D2527811624000		19E	-400H	001
D2527811624200		19E	-400J	001
D2527811624400		19E	-400L	001
D2527811624600		19E	-400M	001
D2527811624800		19E	-400Q	001
		19F	-470E	001

- ITEM NOT ILLUSTRATED

ALPHA/NUMERIC INDEX

PART NUMBER	AIRLINE STOCK NUMBER	FIG NUMBER	ITEM NUMBER	TOTAL REQ'D
D2527811625000		19B	-290D	001
D2527811625600		19E	-400K	001
D2527811626200		19B	-290E	001
		19E	-400P	001
D2527811626400		19E	-400S	001
D2527811627200		19E	-400R	001
		19F	-470F	001
D2527811627800		19E	-400U	001
D2528641100000		07Q	260A	002
			261A	001
		07R	260A	003
D2528641100600		07Q	-260B	002
			-261B	001
		07R	-260B	003
		07S	250A	003
		07T	250A	003
			270A	002
		07U	250A	003
		07V	260A	003
			280A	002
		07W	260A	003
			340A	002
		07X	260A	003
			280A	002
		07Y	170A	003
			390A	002
		07Z	260A	003
			300A	002
		49A	260A	003
			280A	002
		49B	260A	002
			290A	003
		49C	260A	002
		49	260A	003
			310A	002

- ITEM NOT ILLUSTRATED

ALPHA/NUMERIC INDEX

PART NUMBER	AIRLINE STOCK NUMBER	FIG NUMBER	ITEM NUMBER	TOTAL REQ'D
D2528641100695		07S	-250B	003
D2528641101800		49	320A	001
D2528641102000		07Q	-261C	001
		07T	280A	001
		07W	350A	001
		07X	290A	001
		07Z	310A	001
		49A	-290B	001
		49B	280A	001
		49C	280B	001
		49	-320B	001
D2528641102200		07V	290A	001
		07Y	400A	001
		49A	290A	001
		49B	-280B	001
		49C	280A	001
D2528641122200		31	230A	033
D2528641124000		31A	180A	033
		31B	180A	033
		31C	190A	033
D2528641200800		31C	-290A	001
D2528641201000		31C	-300A	001
D2528641201200		31C	-310A	001
D2528641201400		31C	-300B	001
D2528641201600		31C	-290B	001
D2528641224400		31C	-320A	001
D2528641224600		31C	-340A	001
D2528641225000		31C	-400A	001
D2528641225200		31C	-330A	001
D2528641500000		31C	280A	001
D2528641500200		31C	-280B	001
D2528641500400		31C	-280C	001
D2528641500485		31C	-001E	RF
		42S	-210C	001
D2528874820000		31C	-390A	001

- ITEM NOT ILLUSTRATED

ALPHA/NUMERIC INDEX

PART NUMBER	AIRLINE STOCK NUMBER	FIG NUMBER	ITEM NUMBER	TOTAL REQ'D
D2547035200000		21	140A	001
D2547035201200		21	-140B	001
D2547090000400		12B	-010E	001
		12	-010F	001
D2547090002600		12A	-010D	001
		12	-010E	001
D2547090003000		12A	-010B	001
		12C	-010H	001
		12E	-010C	001
		12G	-010D	001
D2547090003200		12A	-010G	001
		12B	-010D	001
		12C	-010B	001
		12D	-010J	001
		12G	010A	001
		12H	-010C	001
		12	-010H	001
D2547090003400		12A	-010C	001
		12C	-010D	001
		12D	-010E	001
		12F	010A	001
		12G	-010L	001
		12	010A	001
D2547090004200		12C	010A	001
		12E	-010D	001
		12H	010A	001
D2547090004400		12A	-010H	001
		12B	-010C	001
		12C	-010E	001
		12D	-010D	001
		12E	-010H	001
		12	-010D	001
D2547090004800		12C	-010G	001
		12E	-010K	001
		12G	-010K	001

- ITEM NOT ILLUSTRATED

ALPHA/NUMERIC INDEX

PART NUMBER	AIRLINE STOCK NUMBER	FIG NUMBER	ITEM NUMBER	TOTAL REQ'D
D2547090005200		12A	010A	001
D2547090005400		12B	-010B	001
		12D	-010F	001
		12E	-010F	001
		12G	-010B	001
		12	-010B	001
D2547090006000		12B	-010F	001
		12C	-010C	001
		12H	-010B	001
		12	-010C	001
D2547090006200		12A	010F	001
		12C	-010F	001
		12E	010A	001
		12G	-010C	001
D2547090007200		12B	010A	001
		12D	-010B	001
		12G	-010F	001
D2547090007400		12	-010G	001
D2547090007800		12D	-010G	001
		12E	-010L	001
		12G	-010H	001
D2547090008000		12A	-010E	001
		12D	-010C	001
D2547090008400		12A	-010J	001
		12C	-010J	001
		12E	-010B	001
		12G	-010E	001
D2547090008600		12D	010A	001
		12E	-010E	001
D2547090009000		12C	-010K	001
		12E	-010G	001
		12G	-010G	001
D2547090009600		12D	-010H	001
		12E	-010J	001
		12G	-010J	001

- ITEM NOT ILLUSTRATED

ALPHA/NUMERIC INDEX

PART NUMBER	AIRLINE STOCK NUMBER	FIG NUMBER	ITEM NUMBER	TOTAL REQ'D
D2547090010000		12J	010A	001
D2547090010200		12H	-010D	001
D2547090010400		12H	-010E	001
D2547090010600		12H	-010F	001
D2547090100000		12A	011A	001
		12B	011A	001
		12C	011A	001
		12D	011A	001
		12E	020A	001
		12F	020A	001
		12G	020A	001
		12H	020A	001
		12	011A	001
D2547090120000		12A	012A	001
		12B	012A	001
		12C	012A	001
		12D	012A	001
		12E	030A	001
		12F	030A	001
		12G	030A	001
		12H	030A	001
		12	012A	001
D2547090220000		12A	013A	001
		12B	013A	001
		12C	013A	001
		12D	013A	001
		12E	040A	001
		12F	040A	001
		12G	040A	001
		12H	040A	001
		12	013A	001
D2547090300000		12A	020A	005
		12B	020A	005
		12C	020A	005
		12D	020A	005

- ITEM NOT ILLUSTRATED

ALPHA/NUMERIC INDEX

PART NUMBER	AIRLINE STOCK NUMBER	FIG NUMBER	ITEM NUMBER	TOTAL REQ'D
		12E	050A	005
		12F	050A	005
		12G	050A	005
		12H	050A	005
		12J	020A	005
		12	020A	005
D2547091000200		12A	-060B	001
D2547091000400		12A	-060F	001
		12B	-060D	001
		12	-060E	001
D2547091001400		12A	-060G	001
		12B	-060C	001
		12	-060D	001
D2547091002200		12A	060A	001
D2547091002400		12A	-060C	001
		12B	-060B	001
		12	060A	001
D2547091002600		12A	-060J	001
		12	-060F	001
D2547091003200		12B	-060E	001
		12	-060C	001
D2547091003400		12A	-060D	001
D2547091004600		12B	060A	001
D2547091004800		12	-060B	001
D2547091005400		12A	-060E	001
D2547091006000		12A	-060H	001
D2547093800800		17A	160A	001
		17B	-160F	001
D2547093801400		17A	-160E	001
		17B	-160C	001
		17F	070A	001
D2547093801600		17B	160A	001
		17	170A	001
D2547093802600		17A	-160C	001
D2547093803200		17A	-160G	001

- ITEM NOT ILLUSTRATED

ALPHA/NUMERIC INDEX

PART NUMBER	AIRLINE STOCK NUMBER	FIG NUMBER	ITEM NUMBER	TOTAL REQ'D
D2547093803400		17A	-160D	001
		17B	-160B	001
D2547093804400		17A	-160B	001
D2547093804600		17A	-160J	001
		17B	-160G	001
D2547093805200		17B	-160E	001
D2547093805400		17A	-160F	001
D2547093806000		17A	-160H	001
D2547093806400		17B	-160D	001
D2547093815000		17A	170A	002
		17B	170A	002
		17C	050A	002
		17D	050A	002
		17E	050A	002
		17F	080A	002
		17	180A	002
D2547160005665		06P	-001P	RF
		41G	-040N	001
D2547160005666		07B	-001P	RF
		41G	-050M	001
D2547160005675		16	-001N	RF
		41G	-120F	001
D2547160005676		17C	-001N	RF
		41G	-130G	001
D2547160007061		02D	-001Q	RF
		41F	-010E	001
		41H	-010F	001
D2547160007066		01L	-050L	001
		07E	-001P	RF
		41F	-050D	001
		41H	-050B	001
D2547160007261		02C	-001N	RF
		42B	-010E	001
D2547160007266		07T	-001P	RF
		42B	-050L	001

- ITEM NOT ILLUSTRATED

ALPHA/NUMERIC INDEX

PART NUMBER	AIRLINE STOCK NUMBER	FIG NUMBER	ITEM NUMBER	TOTAL REQ'D
D2547160007461		01H	-010F	001
		01L	-010F	001
		02D	-001P	RF
D2547160007466		01H	-050L	001
		07C	-001K	RF
D2547160007473		01H	-100C	001
		01L	-100D	001
		14A	-001N	RF
		41F	-100D	001
		41H	-100E	001
		42B	-100C	001
D2547160103465		42U	-040K	001
		48M	-001M	RF
D2547160103466		42U	-050J	001
		49B	-001N	RF
D2547160900200		42J	-001K	RF
			-001N	RF
D2547160900266		07W	-001N	RF
		42J	-050J	001
		42P	050A	001
D2547160900400		42P	-001C	RF
D2547160900465		42P	-040C	001
		48K	-001N	RF
D2547161202281		22D	-001F	RF
		41X	-180E	001
D2547161202282		23B	-001M	RF
		41X	-190G	001
D2547161202861		02D	-001R	RF
		41M	-010F	001
		42N	-010G	001
D2547161202864		05F	-001K	RF
		41M	-030J	001
		42N	-030J	001
D2547161202865		41M	-040N	001
		48N	-001A	RF

- ITEM NOT ILLUSTRATED

ALPHA/NUMERIC INDEX

PART NUMBER	AIRLINE STOCK NUMBER	FIG NUMBER	ITEM NUMBER	TOTAL REQ'D
D2547161202866		41M	-050M	001
		42N	-050N	001
		49C	-001H	RF
D2547161202871		12D	-001P	RF
		41M	-080G	001
D2547161202872		13W	-001A	RF
		41M	-090L	001
D2547161202873		14B	-001C	RF
		41M	-100D	001
		42N	-100E	001
D2547161202874		15T	-001A	RF
		41M	-110J	001
D2547161202875		16F	-001A	RF
		41M	-120F	001
		42N	-120H	001
D2547161202876		17G	-001A	RF
		41M	-130F	001
		42N	130H	001
D2547161202877		18	-001P	RF
		41M	-140C	001
D2547161202878		19K	-001A	RF
		41M	-150G	001
		42N	-150G	001
D2547161202881		22K	-001A	RF
		41M	-180F	001
D2547161202883		26V	-001A	RF
		41M	-200H	001
		42N	-200H	001
D2547161203465		42N	-040N	001
		48N	-001B	RF
D2547161203471		12G	-001N	RF
		42N	-080G	001
D2547161203472		13W	-001B	RF
		42N	-090K	001
D2547161203474		15U	-001A	RF

- ITEM NOT ILLUSTRATED

ALPHA/NUMERIC INDEX

PART NUMBER	AIRLINE STOCK NUMBER	FIG NUMBER	ITEM NUMBER	TOTAL REQ'D
		42N	-110K	001
D2547161203477		18	-001Q	RF
		42N	-140B	001
D2547161203481		22K	-001B	RF
		42N	-180E	001
D2547161901865		42E	-040M	001
		48D	-001P	RF
D2547161901866		07W	-001P	RF
		42E	-050N	001
D2547161903000		01G	-001R	RF
D2547161903064		01G	-030J	001
		05C	-001N	RF
D2547161903065		01G	-040R	001
		48D	-001N	RF
D2547161903066		01G	-050N	001
		07S	-001N	RF
D2547161903071		01G	-080H	001
		12H	-001G	RF
D2547161903072		01G	-090K	001
		13	-001P	RF
D2547161903074		01G	-110F	001
		15L	-001P	RF
D2547161903076		01G	-130K	001
		17F	-001A	RF
D2547161903077		01G	-140D	001
		18	-001N	RF
D2547161903081		01G	-180D	001
		22J	-001A	RF
D2549010400000		42D	-001K	RF
D2549010400065		42D	-040N	001
D2549010400065		42D	-040K	001
		42K	-040E	001
			-040M	001
		48D	-001A	RF
			-001Q	RF

- ITEM NOT ILLUSTRATED

ALPHA/NUMERIC INDEX

PART NUMBER	AIRLINE STOCK NUMBER	FIG NUMBER	ITEM NUMBER	TOTAL REQ'D
D2549010400066		42D	-050M	001
D2549010400066		07V	-001N	RF
			-001P	RF
		42D	-050L	001
		42K	-050E	001
			-050N	001
D2549010400083		26T	-001A	RF
		42D	-200E	001
D2549010400200		42B	-001E	RF
D2549010400266		07U	-001A	RF
		41Z	-050L	001
		42B	-050E	001
		42C	-050H	001
		42F	-050B	001
D2549010400400		42A	-001F	RF
D2549010400466		07T	-001E	RF
		41Z	-050K	001
		42A	-050F	001
		42B	050A	001
		42C	-050B	001
			-050D	001
		42D	-050D	001
		42E	-050B	001
		42F	-050G	001
		42G	-050D	001
		42	-050J	001
D2549010400600		42B	-001M	RF
D2549010400800		42D	-001F	RF
D2549010400864		05J	-001A	RF
		42D	-030E	001
		42E	-030C	001
		42G	-030G	001
		42J	-030C	001
		42K	-030D	001
		42N	-030C	001

- ITEM NOT ILLUSTRATED

ALPHA/NUMERIC INDEX

PART NUMBER	AIRLINE STOCK NUMBER	FIG NUMBER	ITEM NUMBER	TOTAL REQ'D
		42P	030A	001
		42Q	-030G	001
		42R	-030C	001
		42S	-030B	001
D2549010400865		42D	-040F	001
		48C	-001E	RF
D2549010400866		07V	-001E	RF
		42D	-050F	001
D2549010400872		13M	-001A	RF
		42D	-090F	001
D2549010401000		42H	-001C	RF
D2549010401065		42H	-040C	001
		42M	-040J	001
		48G	-001L	RF
D2549010401066		07X	-001J	RF
		42H	-050C	001
		42M	-050H	001
D2549010401071		12G	-001J	RF
		42H	-080C	001
		42L	-080D	001
		42M	-080E	001
		42U	-080C	001
D2549010401072		13P	-001C	RF
		42H	-090C	001
		42M	-090H	001
D2549010401400		42J	-001D	RF
D2549010401465		42J	-040C	001
		48J	-001A	RF
D2549010401466		07X	-001N	RF
		42J	-050C	001
		42N	-050H	001
		42P	-050G	001
D2549010401471		12G	-001L	RF
		42J	-080C	001
		42N	-080F	001

- ITEM NOT ILLUSTRATED

ALPHA/NUMERIC INDEX

PART NUMBER	AIRLINE STOCK NUMBER	FIG NUMBER	ITEM NUMBER	TOTAL REQ'D
		42P	080A	001
D2549010401472		13Q	-001C	RF
		42J	-090C	001
		42N	-090F	001
		42P	090A	001
D2549010401474		15N	-001A	RF
		42J	-110C	001
		42N	-110H	001
		42P	110A	001
D2549010401600		42J	-001F	RF
D2549010401661		02B	-001J	RF
		42J	-010B	001
D2549010401665		42J	-040E	001
		48K	-001B	RF
D2549010401666		42J	-050E	001
		42R	-050J	001
		49A	-001N	RF
		49	-001A	RF
D2549010401672		13Q	-001F	RF
		42J	-090E	001
D2549010401674		15M	-001B	RF
		42J	-110E	001
D2549010401681		22E	-001D	RF
		42J	-180C	001
D2549010401683		01Y	-200G	001
		26C	-001Q	RF
		26R	-001J	RF
		42J	-200C	001
D2549010401800		42G	-001M	RF
D2549010401865		42G	-040M	001
		48D	-001J	RF
D2549010401866		07X	-001F	RF
		42G	-050K	001
D2549010402000		41Z	-001M	RF
D2549010402200		42H	-001G	RF

- ITEM NOT ILLUSTRATED

ALPHA/NUMERIC INDEX

PART NUMBER	AIRLINE STOCK NUMBER	FIG NUMBER	ITEM NUMBER	TOTAL REQ'D
D2549010402265		42H	-040F	001
		48D	-001K	RF
D2549010402266		07X	-001L	RF
		42H	-050F	001
		42L	-050G	001
		42Q	050A	001
		42T	-050M	001
D2549010402272		13P	-001F	RF
		42H	-090G	001
D2549010402400		42N	-001E	RF
D2549010402464		05F	-001F	RF
		42N	-030E	001
		42T	-030D	001
D2549010402465		42N	-040E	001
		42T	-040J	001
		48L	-001C	RF
D2549010402466		42N	-050E	001
		42T	-050J	001
		49	-001D	RF
D2549010402472		13S	-001E	RF
		42N	-090D	001
		42T	-090H	001
D2549010402474		15M	-001D	RF
		42N	-110E	001
D2549010402600		42K	-001E	RF
D2549010402800		42F	-001G	RF
D2549010402865		42F	-040G	001
		48C	-001K	RF
D2549010403000		42F	-001H	RF
D2549010403200		42K	-001K	RF
D2549010403266		07Z	-001H	RF
		42E	-050M	001
		42J	-050H	001
		42K	-050K	001
		42N	-050B	001

- ITEM NOT ILLUSTRATED

ALPHA/NUMERIC INDEX

PART NUMBER	AIRLINE STOCK NUMBER	FIG NUMBER	ITEM NUMBER	TOTAL REQ'D
		42R	-050L	001
D2549010403400		42L	-001M	RF
D2549010403483		26R	-001K	RF
		42L	-200E	001
		42N	-200E	001
		42T	-200F	001
D2549010403600		42H	-001J	RF
D2549010403665		42H	-040H	001
		42U	-040H	001
		48D	-001L	RF
D2549010403800		42M	-001F	RF
D2549010403865		42M	-040F	001
		48K	-001H	RF
D2549010403866		42M	-050E	001
		42T	-050E	001
		49	-001C	RF
D2549010403872		13Q	-001J	RF
		42M	-090D	001
D2549010404000		42J	-001H	RF
D2549010404200		42M	-001C	RF
D2549010404400		42J	-001J	RF
D2549010404465		42J	-040F	001
		42P	040A	001
		48K	-001L	RF
D2549010404600		42N	-001B	RF
D2549010404672		13S	-001B	RF
		42J	-090H	001
		42N	-090B	001
		42R	-090G	001
D2549010404674		15M	-001C	RF
		42K	-110H	001
		42N	-110B	001
		42Q	-110C	001
D2549010404800		42J	-001M	RF
D2549010405000		42Q	-001B	RF

- ITEM NOT ILLUSTRATED

ALPHA/NUMERIC INDEX

PART NUMBER	AIRLINE STOCK NUMBER	FIG NUMBER	ITEM NUMBER	TOTAL REQ'D
D2549010405065		42Q	-040B	001
		42S	040A	001
		42U	-040B	001
		48L	-001H	RF
D2549010405066		42Q	-050B	001
		49	-001H	RF
D2549010405200		42Q	-001D	RF
D2549010405265		42Q	-040D	001
		48A	-001G	RF
D2549010405266		42Q	-050D	001
		49	-001K	RF
D2549010405274		15M	-001F	RF
		42Q	-110D	001
D2549010405400		42Q	-001K	RF
D2549010405465		42Q	-040J	001
		48L	-001J	RF
D2549010405472		13S	-001G	RF
		42Q	-090H	001
D2549010405600		42S	-001M	RF
D2549010405800		42S	-001A	RF
D2549010405866		42S	050A	001
		42U	-050B	001
		49	-001N	RF
D2549010406000		42T	-001F	RF
D2549010406200		42P	-001K	RF
D2549010406400		42T	-001J	RF
D2549010406474		15Q	-001J	RF
		42T	-110E	001
D2549010406800		42U	-001H	RF
D2549010407000		42U	-001B	RF
D2549010407074		15Q	-001K	RF
		42U	-110B	001
D2549010500000		1	-001A	RF
D2549010500061		01A	-010D	001
			010A	001

- ITEM NOT ILLUSTRATED

ALPHA/NUMERIC INDEX

PART NUMBER	AIRLINE STOCK NUMBER	FIG NUMBER	ITEM NUMBER	TOTAL REQ'D
		01B	-010D	001
			010A	001
		01C	-010D	001
			010A	001
		01D	010A	001
		01E	010A	001
		01F	010A	001
		01G	010A	001
		01H	-010B	001
			-010E	001
		01K	-010D	001
		01M	-010D	001
		01N	-010E	001
		1	010A	001
		2	-001A	RF
			-001M	RF
		41T	-010D	001
D2549010500063		01A	020A	001
		01B	020A	001
		01C	020A	001
		01D	020A	001
		01E	020A	001
		01F	020A	001
		01G	020A	001
		01H	-020B	001
		01K	-020D	001
		01L	-020B	001
		01M	-020C	001
		01N	-020D	001
		1	020A	001
		41T	-020C	001
		4	-001A	RF
D2549010500064		01A	030A	001
		01B	030A	001
		01C	030A	001

- ITEM NOT ILLUSTRATED

ALPHA/NUMERIC INDEX

PART NUMBER	AIRLINE STOCK NUMBER	FIG NUMBER	ITEM NUMBER	TOTAL REQ'D
		01D	-030B	001
		01E	030A	001
		01F	030A	001
		01G	-030E	001
		01H	-030B	001
		01K	-030E	001
		01M	-030G	001
		1	030A	001
		41T	-030F	001
		5	-001A	RF
D2549010500065		01E	-040L	001
		06A	-001M	RF
		06V	-001N	RF
		1	040A	001
		41L	-040K	001
		6	-001A	RF
D2549010500066		01A	-050D	001
		01L	-050J	001
		07B	-001L	RF
		07Z	-001N	RF
		1	050A	001
		42P	-050J	001
		7	-001A	RF
D2549010500069		01A	060A	001
		01B	060A	001
		01C	060A	001
		01D	060A	001
		01E	060A	001
		01F	060A	001
		01G	060A	001
		01H	060A	001
		01J	060A	001
		01K	060A	001
		01L	060A	001
		01M	060A	001

- ITEM NOT ILLUSTRATED

ALPHA/NUMERIC INDEX

PART NUMBER	AIRLINE STOCK NUMBER	FIG NUMBER	ITEM NUMBER	TOTAL REQ'D
		01N	060A	001
		01P	060A	001
		01Q	060A	001
		01R	060A	001
		01S	060A	001
		01T	060A	001
		01U	060A	001
		01V	060A	001
		01W	060A	001
		01X	060A	001
		01Y	060A	001
		01Z	060A	001
		10	-001A	RF
		1	060A	001
		41A	060A	001
		41B	060A	001
		41C	060A	001
		41D	060A	001
		41F	060A	001
		41G	060A	001
		41H	060A	001
		41J	060A	001
		41K	060A	001
		41L	060A	001
		41M	060A	001
		41N	060A	001
		41P	060A	001
		41Q	070A	001
		41R	060A	001
		41S	060A	001
		41T	060A	001
		41U	060A	001
		41V	060A	001
		41W	060A	001
		41X	060A	001

- ITEM NOT ILLUSTRATED

ALPHA/NUMERIC INDEX

PART NUMBER	AIRLINE STOCK NUMBER	FIG NUMBER	ITEM NUMBER	TOTAL REQ'D
		41Y	060A	001
		41Z	060A	001
		41	060A	001
		42A	060A	001
		42B	060A	001
		42C	060A	001
		42D	060A	001
		42E	060A	001
		42F	060A	001
		42G	-060B	001
		42	060A	001
D2549010500071		01A	-080B	001
		01B	-080B	001
		12	-001A	RF
		1	080A	001
D2549010500072		01A	-090D	001
		01B	-090B	001
		01C	-090B	001
		01E	090A	001
		01H	-090B	001
		13	-001A	RF
		1	090A	001
D2549010500073		01A	100A	001
		01B	100A	001
		01C	100A	001
		01D	100A	001
		01E	100A	001
		01F	100A	001
		01G	100A	001
		01H	-100B	001
		01K	-100D	001
		01L	-100C	001
		01M	-100C	001
		01N	-100D	001
		14	-001A	RF

- ITEM NOT ILLUSTRATED

ALPHA/NUMERIC INDEX

PART NUMBER	AIRLINE STOCK NUMBER	FIG NUMBER	ITEM NUMBER	TOTAL REQ'D
		1	100A	001
		41T	-100C	001
D2549010500074		01A	-110B	001
		01B	-110C	001
		01C	-110B	001
		01E	-110A	001
		15	-001A	RF
		1	110A	001
D2549010500075		01A	-120B	001
		01B	-120B	001
		01C	-120B	001
		01E	120A	001
		16	-001A	RF
		1	120A	001
D2549010500076		01A	-130B	001
		01B	-130B	001
		01E	-130E	001
		17	-001A	RF
		1	130A	001
D2549010500077		01A	140A	001
		01B	140A	001
		01C	140A	001
		01D	140A	001
		01E	140A	001
		01F	140A	001
		01G	140A	001
		01H	-140C	001
		01K	-140C	001
		01L	-140C	001
		01M	-140B	001
		01N	-140C	001
		18	-001A	RF
			-001R	RF
		1	140A	001
		41T	-140B	001

- ITEM NOT ILLUSTRATED

ALPHA/NUMERIC INDEX

PART NUMBER	AIRLINE STOCK NUMBER	FIG NUMBER	ITEM NUMBER	TOTAL REQ'D
D2549010500078		01A	-150C	001
		01B	-150B	001
		01E	-150F	001
		19	-001A	RF
		1	150A	001
D2549010500079		01A	-160B	001
		01B	-160B	001
		01C	-160B	001
		01E	160A	001
		01K	-160B	001
		1	160A	001
		20	-001A	RF
D2549010500080		01A	170A	001
		01B	-170C	001
		01C	170A	001
		01D	170A	001
		01E	170A	001
		01F	170A	001
		01G	170A	001
		01H	170A	001
		01J	-170B	001
		01K	-170D	001
		01L	-170C	001
		01M	-170C	001
		01N	-170D	001
		1	170A	001
		21	-001A	RF
		41B	-170B	001
		41T	-170C	001
D2549010500081		01A	-180B	001
		1	180A	001
		22	-001A	RF
		41T	-180D	001
D2549010500082		01A	190A	001
		01B	190A	001

- ITEM NOT ILLUSTRATED

ALPHA/NUMERIC INDEX

PART NUMBER	AIRLINE STOCK NUMBER	FIG NUMBER	ITEM NUMBER	TOTAL REQ'D
		01D	190A	001
		01E	190A	001
		01F	-190B	001
		1	190A	001
		23	-001A	RF
		41T	-190D	001
D2549010500083		1	200A	001
		26	-001A	RF
		41T	-200E	001
D2549010500400		1	-001D	RF
D2549010500465		01A	-040C	001
		01B	-040C	001
		01E	-040D	001
		1	-040D	001
		6	-001D	RF
D2549010500466		01A	-050C	001
		1	-050D	001
		7	-001D	RF
D2549010500472		01A	-090C	001
		01B	-090C	001
		01E	-090D	001
		01F	-090E	001
		13	-001D	RF
		1	-090D	001
D2549010500474		15A	-001B	RF
		1	-110D	001
D2549010500475		01A	120A	001
		01B	-120C	001
		01C	-120E	001
		01D	-120C	001
		01E	-120B	001
		01F	-120E	001
		01G	-120G	001
		01H	-120B	001
		01K	-120G	001

- ITEM NOT ILLUSTRATED

ALPHA/NUMERIC INDEX

PART NUMBER	AIRLINE STOCK NUMBER	FIG NUMBER	ITEM NUMBER	TOTAL REQ'D
		16	-001D	RF
		1	-120D	001
		41T	-120D	001
D2549010500476		01A	130A	001
		01B	-130C	001
		01C	-130F	001
		01D	-130C	001
		01E	-130B	001
		01F	-130E	001
		01G	-130G	001
		01K	-130H	001
		17A	-001C	RF
		1	-130D	001
		41T	-130D	001
D2549010500479		01A	160A	001
		01B	160A	001
		01C	160A	001
		01D	160A	001
		01E	-160B	001
		01F	160A	001
		01G	160A	001
		01H	160A	001
		01J	160A	001
		01K	-160C	001
		01L	-160C	001
			160A	001
		01M	160A	001
		01N	160A	001
		01P	-160B	001
		01R	160A	001
		1	-160C	001
		20A	-001P	RF
		20	-001C	RF
		41T	-160D	001
D2549010500480		01A	-170B	001

- ITEM NOT ILLUSTRATED

ALPHA/NUMERIC INDEX

PART NUMBER	AIRLINE STOCK NUMBER	FIG NUMBER	ITEM NUMBER	TOTAL REQ'D
		01B	-170B	001
		01E	-170C	001
		01F	-170C	001
		1	-170C	001
		21	-001C	RF
D2549010500483		1	-200B	001
		26	-001B	RF
D2549010500600		1	-001E	RF
D2549010500665		01A	-040B	001
		1	-040E	001
		6	-001E	RF
D2549010500666		01A	-050B	001
		1	-050E	001
		7	-001E	RF
D2549010500671		01A	080A	001
		01B	-080C	001
		12	-001D	RF
		1	-080D	001
D2549010500672		01A	-090B	001
		01C	090A	001
		01D	-090D	001
		01E	-090F	001
		01F	-090B	001
		01G	-090B	001
		01H	-090F	001
		01N	-090K	001
		13	-001E	RF
		1	-090E	001
D2549010500678		01A	-150B	001
		01B	-150G	001
		01C	-150C	001
		01D	-150D	001
		19B	-001B	RF
		1	-150E	001
D2549010500683		1	-200F	001

- ITEM NOT ILLUSTRATED

ALPHA/NUMERIC INDEX

PART NUMBER	AIRLINE STOCK NUMBER	FIG NUMBER	ITEM NUMBER	TOTAL REQ'D
		26	-001K	RF
D2549010500800		1	-001G	RF
D2549010500865		01A	-040D	001
		1	-040H	001
		6	-001K	RF
D2549010501000		01A	-001A	RF
			-001Q	RF
		01B	-001N	RF
		41T	-001F	RF
			-001G	RF
D2549010501064		01B	-030E	001
		01C	-030D	001
		01F	-030E	001
		01G	-030F	001
		01H	-030D	001
		01J	-030H	001
		01K	-030F	001
		01L	030A	001
		01Q	-030H	001
		01X	-030C	001
		05A	-001M	RF
		41T	-030D	001
D2549010501065		01A	-040K	001
			040A	001
		01B	-040L	001
		06B	-001M	RF
		41T	-040F	001
			-040G	001
		48J	-001L	RF
		6	-001G	RF
			-001P	RF
D2549010501066		01A	050A	001
		01B	-050J	001
		01C	-050K	001
		01F	-050K	001

- ITEM NOT ILLUSTRATED

ALPHA/NUMERIC INDEX

PART NUMBER	AIRLINE STOCK NUMBER	FIG NUMBER	ITEM NUMBER	TOTAL REQ'D
		01G	-050J	001
		01H	-050C	001
			-050K	001
		01J	-050C	001
		01K	-050K	001
		01L	-050K	001
			050A	001
		01Q	-050C	001
		01X	-050L	001
		07A	-001A	RF
			-001N	RF
		07Y	-001A	RF
			-001N	RF
		41T	-050E	001
			-050F	001
D2549010501071		01A	-080G	001
		01B	-080F	001
		01K	-080J	001
		12B	-001C	RF
		1	-080E	001
		41T	-080D	001
D2549010501072		01A	090A	001
		01B	-090E	001
		01E	-090B	001
		01G	-090D	001
		13	-001F	RF
		1	-090F	001
D2549010501078		01A	150A	001
		01B	-150E	001
		01C	150A	001
		01E	-150B	001
		01F	-150B	001
		01G	-150E	001
		01H	-150C	001
		01K	-150H	001

- ITEM NOT ILLUSTRATED

ALPHA/NUMERIC INDEX

PART NUMBER	AIRLINE STOCK NUMBER	FIG NUMBER	ITEM NUMBER	TOTAL REQ'D
		19C	-001A	RF
		1	-150F	001
		41T	-150D	001
D2549010501081		01A	180A	001
		01B	-180C	001
		1	-180D	001
		22	-001B	RF
		41T	-180C	001
D2549010501083		01A	200A	001
		01B	200A	001
		1	-200D	001
		26	-001C	RF
		41T	-200D	001
D2549010501200		01A	-001D	RF
D2549010501400		01A	-001B	RF
D2549010501483		01A	-200G	001
		26	-001L	RF
D2549010501600		01A	-001C	RF
D2549010501677		01A	-140C	001
		18	-001D	RF
D2549010501683		01A	-200B	001
		01B	-200B	001
		26	-001D	RF
D2549010501800		01A	-001E	RF
D2549010501865		01A	-040E	001
		01C	040A	001
		01E	-040H	001
		6	-001J	RF
D2549010501866		01A	-050E	001
		01C	050A	001
		01E	-050H	001
		01F	-050B	001
		7	-001F	RF
D2549010501871		01A	-080C	001
		01C	080A	001

- ITEM NOT ILLUSTRATED

ALPHA/NUMERIC INDEX

PART NUMBER	AIRLINE STOCK NUMBER	FIG NUMBER	ITEM NUMBER	TOTAL REQ'D
		12	-001E	RF
D2549010501875		01A	-120C	001
		01C	120A	001
		01D	120A	001
		01E	-120E	001
		01F	-120B	001
		16	-001E	RF
D2549010501876		01A	-130C	001
		01C	130A	001
		01E	-130F	001
		01F	-130B	001
		17A	-001D	RF
D2549010501881		01A	-180D	001
		01B	180A	001
		01C	-180C	001
			180A	001
		01D	-180B	001
		01E	-180C	001
			180A	001
		01F	-180D	001
			180A	001
		01G	-180B	001
		01H	-180E	001
			-180F	001
			180A	001
		01J	-180B	001
		01K	-180D	001
		01L	-180B	001
			-180C	001
		01M	-180D	001
		01N	-180B	001
		1	-180C	001
		22	-001C	RF
			-001F	RF
			-001G	RF

- ITEM NOT ILLUSTRATED

ALPHA/NUMERIC INDEX

PART NUMBER	AIRLINE STOCK NUMBER	FIG NUMBER	ITEM NUMBER	TOTAL REQ'D
			-001H	RF
		41	-180D	001
D2549010501883		01A	-200H	001
		01B	-200F	001
		1	-200G	001
		26B	-001A	RF
D2549010502000		01C	-001F	RF
			-001N	RF
D2549010502065		01F	-040K	001
		01H	-040C	001
		01J	-040C	001
		01L	040A	001
		01Q	-040C	001
		01X	-040K	001
		48E	-001B	RF
D2549010502066		01C	-050F	001
		07A	-001M	RF
D2549010502072		01C	-090F	001
		01F	-090F	001
		01G	-090H	001
		01H	-090C	001
		01J	-090C	001
		01K	-090H	001
		01L	090A	001
		01Q	-090C	001
		01X	-090J	001
		13	-001N	RF
D2549010502165		01C	-040L	001
		48E	-001C	RF
D2549010502200		01A	-001G	RF
D2549010502265		01A	-040F	001
		01B	-040J	001
		6	-001L	RF
D2549010502266		01B	050A	001
		01C	-050G	001

- ITEM NOT ILLUSTRATED

ALPHA/NUMERIC INDEX

PART NUMBER	AIRLINE STOCK NUMBER	FIG NUMBER	ITEM NUMBER	TOTAL REQ'D
		01D	-050D	001
		01E	-050G	001
		7	-001G	RF
D2549010502275		01A	-120D	001
		01B	-120D	001
		01C	-120D	001
		01D	-120B	001
		01E	-120D	001
		01F	-120D	001
		01G	-120H	001
		01H	-120D	001
		01K	-120H	001
		01N	-120F	001
		16	-001F	RF
D2549010502276		01A	-130D	001
		01B	-130D	001
		01C	-130D	001
			-130G	001
		01D	-130B	001
		01E	-130D	001
		01F	-130D	001
		01G	-130H	001
		01K	-130J	001
		17A	-001E	RF
			-001P	RF
D2549010502283		01A	-200J	001
		26B	-001B	RF
D2549010502400		01A	-001H	RF
			-001P	RF
D2549010502464		01A	-030B	001
		01G	-030D	001
		05A	-001J	RF
D2549010502465		01A	-040G	001
		6	-001M	RF
D2549010502466		01A	-050H	001

- ITEM NOT ILLUSTRATED

ALPHA/NUMERIC INDEX

PART NUMBER	AIRLINE STOCK NUMBER	FIG NUMBER	ITEM NUMBER	TOTAL REQ'D
		7	-001H	RF
D2549010502471		01A	-080D	001
		01B	-080D	001
		12	-001F	RF
D2549010502474		01A	-110C	001
		01G	-110D	001
		15	-001C	RF
D2549010502478		01A	-150F	001
		19B	-001D	RF
D2549010502483		01A	-200F	001
		26B	-001C	RF
D2549010502600		01B	-001B	RF
D2549010502665		01B	-040B	001
		01E	-040F	001
		06B	-001B	RF
D2549010502666		01B	-050B	001
		01E	-050F	001
		7	-001K	RF
D2549010502800		01B	-001C	RF
D2549010502866		01B	-050C	001
		01E	-050D	001
		01F	-050E	001
		7	-001J	RF
D2549010502877		01B	-140B	001
		01E	-140C	001
		01F	-140B	001
		18	-001C	RF
D2549010502878		01A	-150D	001
		01B	-150C	001
		01E	-150D	001
		01F	-150E	001
		19B	-001G	RF
		1	-150D	001
D2549010503200		01B	-001K	RF
D2549010503271		01B	-080G	001

- ITEM NOT ILLUSTRATED

ALPHA/NUMERIC INDEX

PART NUMBER	AIRLINE STOCK NUMBER	FIG NUMBER	ITEM NUMBER	TOTAL REQ'D
		12B	-001E	RF
D2549010503400		01B	-001J	RF
D2549010503483		01B	-200C	001
		01E	-200C	001
		01F	-200C	001
		26	-001E	RF
D2549010503600		01C	-001A	RF
D2549010503800		01B	-001L	RF
D2549010504200		01C	-001C	RF
D2549010504265		01C	-040C	001
		48E	-001L	RF
D2549010504266		01C	-050C	001
		07A	-001E	RF
D2549010504271		01C	-080C	001
		12	-001H	RF
D2549010504275		01C	-120C	001
		16	-001G	RF
D2549010504276		01C	-130C	001
		17A	-001F	RF
D2549010504278		01C	-150F	001
			-150G	001
		01G	150A	001
		01K	-150J	001
		19B	-001F	RF
			-001L	RF
D2549010504400		01C	-001D	RF
D2549010504465		01C	-040D	001
		01F	-040D	001
		48E	-001K	RF
D2549010504466		01B	-050D	001
		01C	-050D	001
		01D	-050C	001
		01F	-050D	001
		01G	-050F	001
		01H	-050E	001

- ITEM NOT ILLUSTRATED

ALPHA/NUMERIC INDEX

PART NUMBER	AIRLINE STOCK NUMBER	FIG NUMBER	ITEM NUMBER	TOTAL REQ'D
		07Y	-001B	RF
D2549010504471		01A	-080F	001
		01C	-080D	001
		12	-001J	RF
D2549010504472		01C	-090C	001
		01F	-090J	001
		01L	-090G	001
		13B	-001M	RF
		41D	-090M	001
D2549010504600		01C	-001G	RF
D2549010504665		01C	-040G	001
		6	-001N	RF
D2549010504800		01C	-001L	RF
			-001M	RF
		01K	-001N	RF
D2549010504865		01C	-040F	001
		01K	-040N	001
		06A	-001C	RF
D2549010504866		01C	-050L	001
		01K	-050L	001
		07Y	-001K	RF
		49B	-001L	RF
D2549010504965		01C	-040M	001
		48E	-001M	RF
D2549010505000		01D	-001H	RF
D2549010505065		01D	-040G	001
		06E	-001J	RF
D2549010505200		01D	-001E	RF
D2549010505265		01D	-040E	001
		06C	-001D	RF
D2549010505400		01D	-001G	RF
D2549010505465		01D	-040F	001
		06A	-001E	RF
D2549010505600		01D	-001J	RF
D2549010505665		01D	-040H	001

- ITEM NOT ILLUSTRATED

ALPHA/NUMERIC INDEX

PART NUMBER	AIRLINE STOCK NUMBER	FIG NUMBER	ITEM NUMBER	TOTAL REQ'D
		01G	-040K	001
		06C	-001F	RF
D2549010505666		01D	-050F	001
		01G	-050K	001
		07A	-001F	RF
D2549010505674		01D	-110B	001
		01G	-110E	001
		15	-001D	RF
D2549010505678		01D	-150F	001
		01G	-150F	001
		19A	-001D	RF
D2549010505682		01F	-190C	001
		01H	-190F	001
			-190G	001
			190A	001
		01L	-190C	001
			-190E	001
		23	-001C	RF
			-001J	RF
			-001K	RF
D2549010505800		01D	-001F	RF
D2549010505865		01D	-040M	001
		06A	-001H	RF
D2549010505872		01D	-090C	001
		01G	-090F	001
		13	-001G	RF
D2549010506000		01E	-001F	RF
D2549010506071		01E	-080E	001
		12A	-001C	RF
D2549010506200		01E	-001D	RF
D2549010506400		01E	-001H	RF
D2549010506471		01E	-080F	001
		01F	-080B	001
		12A	-001D	RF
D2549010506800		41B	-001B	RF

- ITEM NOT ILLUSTRATED

ALPHA/NUMERIC INDEX

PART NUMBER	AIRLINE STOCK NUMBER	FIG NUMBER	ITEM NUMBER	TOTAL REQ'D
D2549010506865		06E	-001K	RF
		41B	-040B	001
D2549010506866		01W	-050D	001
		07C	-001C	RF
		41B	-050B	001
D2549010506876		01H	-130E	001
		17B	-001J	RF
		41B	-130B	001
D2549010506881		01H	-180D	001
		01K	-180C	001
		22	-001E	RF
		41B	-180B	001
D2549010506882		01F	-190D	001
		01H	-190E	001
		01K	-190C	001
		23C	-001B	RF
		41B	-190B	001
D2549010507000		01F	-001E	RF
D2549010507065		01F	-040E	001
		06D	-001B	RF
D2549010507071		01C	-080E	001
		01E	-080D	001
		01F	-080E	001
		01G	-080F	001
		01H	-080B	001
		01J	-080B	001
		12A	-001H	RF
D2549010507200		01F	-001B	RF
D2549010507265		01F	-040B	001
		06B	-001L	RF
D2549010507400		01F	-001D	RF
D2549010507471		01A	-080H	001
		01C	-080H	001
		01D	-080F	001
		01E	-080J	001

- ITEM NOT ILLUSTRATED

ALPHA/NUMERIC INDEX

PART NUMBER	AIRLINE STOCK NUMBER	FIG NUMBER	ITEM NUMBER	TOTAL REQ'D
		01F	-080D	001
		01G	-080D	001
		01H	080A	001
		01K	-080K	001
		01L	-080F	001
		01N	-080E	001
		12A	-001G	RF
		41B	-080B	001
D2549010507600		01E	-001M	RF
D2549010507671		01E	-080K	001
		12A	-001K	RF
D2549010507800		01G	-001K	RF
D2549010508000		01G	-001A	RF
			-001Q	RF
D2549010508061		01G	-010E	001
		2	-001S	RF
D2549010508064		01G	030A	001
		05A	-001D	RF
D2549010508065		01G	040A	001
		06D	-001G	RF
D2549010508066		01G	050A	001
		07C	-001D	RF
D2549010508071		01G	080A	001
		12A	-001L	RF
D2549010508072		01G	090A	001
		13A	-001F	RF
D2549010508074		01G	110A	001
		15	-001E	RF
D2549010508075		01G	120A	001
		16	-001L	RF
D2549010508076		01G	130A	001
		17B	-001D	RF
D2549010508081		01G	180A	001
		22C	-001A	RF
D2549010508082		01G	190A	001

- ITEM NOT ILLUSTRATED

ALPHA/NUMERIC INDEX

PART NUMBER	AIRLINE STOCK NUMBER	FIG NUMBER	ITEM NUMBER	TOTAL REQ'D
		23A	-001A	RF
D2549010508083		01G	200A	001
		26A	-001E	RF
D2549010508164		01G	-030H	001
		05A	-001P	RF
D2549010508165		01G	-040Q	001
		06E	-001S	RF
D2549010508200		01G	-001F	RF
D2549010508265		01G	-040F	001
		06D	-001L	RF
D2549010508283		01G	-200C	001
		26A	-001D	RF
D2549010508400		01G	-001M	RF
			-001P	RF
D2549010508461		01G	-010F	001
		2	-001R	RF
D2549010508465		01G	-040N	001
		06E	-001N	RF
D2549010508466		01G	-050M	001
		07B	-001N	RF
D2549010508565		01G	-040P	001
		06E	-001R	RF
D2549010508600		01H	-001E	RF
D2549010508665		01H	-040E	001
		06E	-001F	RF
D2549010508800		01G	-001L	RF
D2549010508865		01G	-040L	001
		06C	-001M	RF
D2549010509000		01G	-001G	RF
		01N	-001N	RF
D2549010509064		01A	-030F	001
		01B	-030D	001
		01E	-030E	001
		01F	-030F	001
		01G	-030G	001

- ITEM NOT ILLUSTRATED

ALPHA/NUMERIC INDEX

PART NUMBER	AIRLINE STOCK NUMBER	FIG NUMBER	ITEM NUMBER	TOTAL REQ'D
		01J	-030J	001
		01N	-030G	001
		1	-030D	001
		5	-001M	RF
D2549010509065		01G	-040G	001
		01N	040A	001
		01Q	-040G	001
		06E	-001A	RF
		41D	-040M	001
		48E	-001J	RF
D2549010509066		01G	-050G	001
		07B	-001F	RF
D2549010509075		01G	-120F	001
		01H	-120E	001
		01J	-120B	001
		16A	-001D	RF
D2549010509076		01G	-130F	001
		01H	-130B	001
		01J	-130B	001
		17A	-001M	RF
D2549010509200		01H	-001D	RF
D2549010509265		01H	-040D	001
		01J	-040B	001
		01K	-040J	001
		06E	-001E	RF
D2549010509266		01H	-050D	001
		07C	-001J	RF
D2549010509400		01J	-001H	RF
D2549010509465		01J	-040H	001
		06F	-001C	RF
D2549010509466		01J	-050H	001
		01P	-050D	001
		01Y	-050M	001
		07D	-001C	RF
D2549010509472		01J	-090H	001

- ITEM NOT ILLUSTRATED

ALPHA/NUMERIC INDEX

PART NUMBER	AIRLINE STOCK NUMBER	FIG NUMBER	ITEM NUMBER	TOTAL REQ'D
		01P	-090C	001
		13B	-001C	RF
D2549010509475		01J	-120F	001
		01K	120A	001
		01L	120A	001
		01N	120A	001
		01P	-120D	001
		01Q	-120E	001
		01R	-120B	001
		01W	-120F	001
		01X	120A	001
		01Y	-120C	001
		16B	-001E	RF
		41C	120A	001
		41D	-120F	001
		41G	120A	001
		41H	120A	001
		41R	120A	001
D2549010509476		01J	-130D	001
		01K	130A	001
		01L	130A	001
		01N	130A	001
		01P	-130C	001
		01Q	-130C	001
		01R	-130B	001
		01W	-130F	001
		01X	130A	001
		01Y	-130C	001
		17C	-001C	RF
		41C	130A	001
		41D	-130F	001
		41G	130A	001
		41H	130A	001
		41R	130A	001
D2549010509477		01J	-140D	001

- ITEM NOT ILLUSTRATED

ALPHA/NUMERIC INDEX

PART NUMBER	AIRLINE STOCK NUMBER	FIG NUMBER	ITEM NUMBER	TOTAL REQ'D
		01N	-140B	001
		01P	-140C	001
		01S	140A	001
		01W	-140B	001
		01Y	-140C	001
		18	-001J	RF
		41G	-140C	001
		41	-140B	001
D2549010509478		01J	-150F	001
		01P	-150D	001
		01Y	-150G	001
		19E	-001E	RF
D2549010509480		01J	-170D	001
		01P	-170C	001
		21	-001G	RF
D2549010509483		01J	-200D	001
		01N	-200B	001
		01P	-200C	001
		01S	200A	001
		01Y	-200C	001
		26C	-001C	RF
D2549010509600		01J	-001K	RF
D2549010509665		01J	-040K	001
		06F	-001E	RF
D2549010509800		41B	-001G	RF
D2549010509864		01M	-030B	001
			-030H	001
		05B	-001A	RF
			-001P	RF
D2549010509865		06G	-001A	RF
		41B	-040F	001
D2549010509866		01Q	-050L	001
		01W	-050H	001
		07D	-001H	RF
		41B	-050D	001

- ITEM NOT ILLUSTRATED

ALPHA/NUMERIC INDEX

PART NUMBER	AIRLINE STOCK NUMBER	FIG NUMBER	ITEM NUMBER	TOTAL REQ'D
			-050F	001
D2549010509874		01M	110A	001
		01R	110A	001
		15D	-001B	RF
		41B	-110D	001
D2549010510000		01K	-001D	RF
D2549010510064		01J	-030G	001
		01K	-030C	001
		01L	-030B	001
		01M	-030C	001
		01N	-030C	001
		05B	-001B	RF
D2549010510065		01K	-040D	001
		06G	-001C	RF
D2549010510071		01K	-080E	001
		12C	-001D	RF
D2549010510200		01L	-001A	RF
D2549010510265		01L	-040J	001
		06B	-001N	RF
D2549010510266		01M	-050D	001
		07D	-001M	RF
D2549010510271		01J	-080D	001
		01K	080A	001
		01L	080A	001
		01P	-080C	001
		01Q	-080C	001
		01R	-080B	001
		01W	-080F	001
		01X	080A	001
		01Y	-080C	001
		12C	-001E	RF
		41C	080A	001
		41D	-080H	001
		41G	080A	001
D2549010510272		01R	-090B	001

- ITEM NOT ILLUSTRATED

ALPHA/NUMERIC INDEX

PART NUMBER	AIRLINE STOCK NUMBER	FIG NUMBER	ITEM NUMBER	TOTAL REQ'D
		01W	090A	001
		01Y	-090H	001
		13B	-001K	RF
		41F	-090G	001
		41H	-090G	001
D2549010510278		01L	150A	001
		01Q	-150C	001
		01R	-150B	001
		01W	-150G	001
		01X	150A	001
		01Y	-150C	001
		19F	-001A	RF
		41C	150A	001
D2549010510400		01J	-001L	RF
D2549010510464		01J	-030F	001
		05A	-001E	RF
D2549010510465		01J	-040L	001
		06F	-001F	RF
D2549010510466		01J	-050J	001
		07D	-001D	RF
D2549010510471		01J	-080E	001
		01T	-080D	001
		12C	-001J	RF
		41A	-080D	001
		41H	-080C	001
		41	-080C	001
D2549010510472		01J	-090J	001
		13B	-001D	RF
		41A	-090D	001
		41H	-090C	001
D2549010510474		01J	-110E	001
		15C	-001D	RF
		41B	-110E	001
D2549010510475		01J	-120G	001
		01T	-120E	001

- ITEM NOT ILLUSTRATED

ALPHA/NUMERIC INDEX

PART NUMBER	AIRLINE STOCK NUMBER	FIG NUMBER	ITEM NUMBER	TOTAL REQ'D
		16B	-001G	RF
		41A	-120D	001
		41H	-120C	001
		41M	-120B	001
		41N	-120B	001
		41	-120D	001
		42E	-120F	001
		42J	-120E	001
		42K	-120E	001
		42N	-120B	001
		42R	-120F	001
D2549010510476		01J	-130E	001
		17C	-001D	RF
D2549010510481		01J	-180D	001
		01T	-180C	001
		22F	-001A	RF
		41	-180B	001
D2549010510483		01J	-200E	001
		01U	-200B	001
		26C	-001D	RF
D2549010510600		01P	-001L	RF
			-001N	RF
D2549010510665		01P	-040L	001
		06K	-001E	RF
D2549010510674		01L	-110D	001
		01P	-110E	001
		01Q	-110C	001
		01R	-110B	001
		01S	-110E	001
		01T	-110B	001
		01U	-110B	001
		01V	-110B	001
		01W	-110E	001
		01X	110A	001
		15F	-001B	RF

- ITEM NOT ILLUSTRATED

ALPHA/NUMERIC INDEX

PART NUMBER	AIRLINE STOCK NUMBER	FIG NUMBER	ITEM NUMBER	TOTAL REQ'D
D2549010510679		01A	-160E	001
		01B	-160E	001
		01E	-160E	001
		01F	-160D	001
		01G	-160D	001
		01J	-160D	001
		01M	-160D	001
		01N	-160B	001
		01P	-160E	001
		01Q	-160D	001
		01S	-160B	001
		01T	-160B	001
		01U	160A	001
		01V	-160D	001
		01W	-160C	001
		01X	-160B	001
		01Y	-160E	001
		01Z	160A	001
		1	-160E	001
		20A	-001C	RF
		41A	-160C	001
		41B	-160D	001
		41C	-160B	001
		41D	160A	001
		41F	-160C	001
		41G	-160C	001
		41H	-160B	001
		41J	-160D	001
		41K	160A	001
		41L	160A	001
		41M	160A	001
		41N	-160B	001
		41P	160A	001
		41Q	170A	001
		41R	-160B	001

- ITEM NOT ILLUSTRATED

ALPHA/NUMERIC INDEX

PART NUMBER	AIRLINE STOCK NUMBER	FIG NUMBER	ITEM NUMBER	TOTAL REQ'D
		41S	-160B	001
		41T	160A	001
		41U	160A	001
		41V	160A	001
		41W	160A	001
		41X	-160C	001
		41Y	-160B	001
		41Z	160A	001
		41	160A	001
		42A	160A	001
		42B	160A	001
		42C	160A	001
		42D	160A	001
		42E	-160B	001
		42F	160A	001
		42G	160A	001
		42H	-160B	001
		42J	160A	001
		42K	160A	001
		42L	-160B	001
		42M	-160B	001
		42N	160A	001
		42P	160A	001
		42Q	160A	001
		42R	-160C	001
		42S	-160B	001
		42T	160A	001
		42U	160A	001
		42	-160E	001
D2549010510800		01K	-001H	RF
D2549010510876		01K	-130F	001
		01N	-130C	001
		01P	-130D	001
		01T	-130B	001
		01V	-130D	001

- ITEM NOT ILLUSTRATED

ALPHA/NUMERIC INDEX

PART NUMBER	AIRLINE STOCK NUMBER	FIG NUMBER	ITEM NUMBER	TOTAL REQ'D
		01Y	-130D	001
		17C	-001H	RF
		41F	-130D	001
		41G	-130E	001
D2549010511000		01J	-001B	RF
D2549010511066		01J	-050B	001
		01K	-050G	001
		01N	-050D	001
		01P	-050E	001
		01V	-050H	001
		01Y	-050D	001
		07B	-001A	RF
		41F	-050E	001
		41G	-050J	001
D2549010511074		01J	-110B	001
		01K	110A	001
		01L	110A	001
		01M	-110B	001
		01N	110A	001
		01P	-110B	001
		15C	-001B	RF
		41B	110A	001
D2549010511082		01J	-190B	001
		01K	190A	001
		01L	190A	001
		01M	190A	001
		01N	190A	001
		01P	-190B	001
		01Q	-190C	001
		01R	190A	001
		01S	-190B	001
		01T	-190B	001
		01U	190A	001
		01V	-190B	001
		01W	-190C	001

- ITEM NOT ILLUSTRATED

ALPHA/NUMERIC INDEX

PART NUMBER	AIRLINE STOCK NUMBER	FIG NUMBER	ITEM NUMBER	TOTAL REQ'D
		01X	190A	001
		01Y	-190C	001
		01Z	190A	001
		23B	-001B	RF
		41A	-190B	001
		41B	190A	001
		41C	190A	001
		41D	190A	001
		41F	190A	001
		41G	190A	001
		41H	190A	001
		41J	190A	001
		41K	190A	001
		41L	190A	001
		41M	190A	001
		41N	-190B	001
		41P	190A	001
		41R	-190B	001
		41S	190A	001
		41T	190A	001
		41U	-190B	001
		41V	190A	001
		41W	-190B	001
		41X	-190B	001
		41Y	190A	001
		41Z	190A	001
		41	190A	001
		42A	190A	001
		42B	-190B	001
		42D	-190B	001
		42E	190A	001
		42F	190A	001
		42G	-190C	001
		42H	-190C	001
		42J	190A	001

- ITEM NOT ILLUSTRATED

ALPHA/NUMERIC INDEX

PART NUMBER	AIRLINE STOCK NUMBER	FIG NUMBER	ITEM NUMBER	TOTAL REQ'D
		42K	-190E	001
		42M	-190B	001
		42N	-190B	001
		42P	-190B	001
		42Q	190A	001
		42R	-190C	001
		42S	190A	001
		42T	190A	001
		42U	190A	001
		42	-190B	001
D2549010511200		01H	-001J	RF
D2549010511265		01H	-040N	001
		48E	-001F	RF
D2549010511278		01H	-150E	001
		01J	-150B	001
		19C	-001B	RF
D2549010511400		01K	-001F	RF
D2549010511465		01K	-040F	001
		06F	-001M	RF
D2549010511466		01K	-050F	001
		01L	-050E	001
		01S	-050D	001
		07C	-001A	RF
D2549010511471		01K	-080F	001
		01L	-080E	001
		01S	-080C	001
		12C	-001C	RF
D2549010511474		01K	-110D	001
		01L	-110B	001
		01M	-110D	001
		15C	-001E	RF
D2549010511475		01K	-120E	001
		01L	-120E	001
		01S	-120D	001
		16B	-001K	RF

- ITEM NOT ILLUSTRATED

ALPHA/NUMERIC INDEX

PART NUMBER	AIRLINE STOCK NUMBER	FIG NUMBER	ITEM NUMBER	TOTAL REQ'D
		42Q	-120E	001
		42U	-120D	001
D2549010511476		01K	-130E	001
		01L	-130E	001
		01S	-130C	001
		17C	-001G	RF
		42Q	-130D	001
		42U	-130E	001
D2549010511478		01K	-150F	001
		19E	-001J	RF
D2549010511600		01M	-001H	RF
D2549010511665		01M	-040F	001
		06H	-001H	RF
D2549010511800		01N	-001D	RF
			-001L	RF
D2549010511864		01N	-030B	001
		01P	-030D	001
			-030J	001
		05A	-001G	RF
			-001N	RF
D2549010511865		01N	-040D	001
		06J	-001C	RF
D2549010511874		01N	-110C	001
		15C	-001H	RF
D2549010511878		01N	-150C	001
		19F	-001D	RF
		41F	-150F	001
D2549010512000		41B	-001E	RF
D2549010512065		06G	-001L	RF
		41B	-040D	001
D2549010512200		01P	-001E	RF
D2549010512265		01P	-040E	001
		06K	-001C	RF
D2549010512400		01P	-001F	RF
D2549010512600		01L	-001B	RF

- ITEM NOT ILLUSTRATED

ALPHA/NUMERIC INDEX

PART NUMBER	AIRLINE STOCK NUMBER	FIG NUMBER	ITEM NUMBER	TOTAL REQ'D
D2549010512664		01P	-030G	001
		01Q	-030C	001
		01S	-030B	001
		01T	030A	001
		01U	-030B	001
		01V	030A	001
		01W	-030D	001
		01X	030A	001
		01Y	030A	001
		01Z	030A	001
		05B	-001C	RF
			-001Q	RF
		41A	030A	001
		41B	-030D	001
		41C	030A	001
		41D	030A	001
		41F	-030C	001
		41G	-030C	001
		41H	030A	001
		41J	-030D	001
			-030H	001
		41K	030A	001
		41L	030A	001
		41M	030A	001
		41N	-030E	001
		41	030A	001
D2549010512673		01L	-100B	001
		01P	-100D	001
		01Q	-100C	001
		01R	-100B	001
		01S	-100B	001
		01T	100A	001
		01U	100A	001
		01V	100A	001
		01W	100A	001

- ITEM NOT ILLUSTRATED

ALPHA/NUMERIC INDEX

PART NUMBER	AIRLINE STOCK NUMBER	FIG NUMBER	ITEM NUMBER	TOTAL REQ'D
		01X	100A	001
		01Y	100A	001
		01Z	100A	001
		14	-001H	RF
		41A	100A	001
		41B	-100D	001
		41C	100A	001
		41D	100A	001
		41E	090A	001
		41F	-100C	001
		41G	-100C	001
		41H	100A	001
		41J	100A	001
		41K	100A	001
		41L	100A	001
		41M	100A	001
		41N	-100B	001
		41P	100A	001
		41Q	110A	001
		41R	-100B	001
		41S	100A	001
		41T	100A	001
		41U	100A	001
		41V	100A	001
		41W	100A	001
		41X	100A	001
		41Y	100A	001
		41Z	100A	001
		41	100A	001
		42A	100A	001
		42B	100A	001
		42C	100A	001
		42D	100A	001
		42E	-100B	001
		42F	100A	001

- ITEM NOT ILLUSTRATED

ALPHA/NUMERIC INDEX

PART NUMBER	AIRLINE STOCK NUMBER	FIG NUMBER	ITEM NUMBER	TOTAL REQ'D
D2549010512679		42G	100A	001
		42H	-100B	001
		42J	100A	001
		42K	100A	001
		42L	100A	001
		42M	100A	001
		42N	100A	001
		42P	100A	001
		42Q	100A	001
		42R	-100D	001
		42S	100A	001
		42T	-100C	001
		42U	-100B	001
		42	-100C	001
		01A	-160D	001
		01B	-160D	001
		01C	-160C	001
		01E	-160D	001
		01F	-160C	001
		01G	-160C	001
		01H	-160B	001
		01J	-160C	001
		01K	-160E	001
		01L	-160B	001
		01M	-160C	001
		01N	-160C	001
		01P	-160F	001
		01Q	-160C	001
		01R	-160B	001
		01S	-160C	001
		01T	160A	001
		01U	-160B	001
		01V	160A	001
		01W	160A	001
		01X	160A	001

- ITEM NOT ILLUSTRATED

ALPHA/NUMERIC INDEX

PART NUMBER	AIRLINE STOCK NUMBER	FIG NUMBER	ITEM NUMBER	TOTAL REQ'D
		01Y	160A	001
		01Z	-160B	001
		1	-160D	001
		20A	-001A	RF
		41A	160A	001
		41B	-160B	001
		41C	160A	001
		41D	-160E	001
		41F	-160D	001
		41G	-160D	001
		41H	160A	001
		41J	-160F	001
		41K	-160B	001
		41L	-160B	001
		41M	-160B	001
		41N	-160D	001
		41P	-160B	001
		41R	-160C	001
		41S	160A	001
		41T	-160C	001
		41U	-160B	001
		41V	-160B	001
		41W	-160E	001
		41X	160A	001
		41Y	160A	001
		41Z	-160B	001
		41	-160B	001
		42A	-160B	001
		42C	-160B	001
		42D	-160D	001
		42E	-160C	001
		42F	-160B	001
		42G	-160C	001
		42H	-160C	001
		42J	-160B	001

- ITEM NOT ILLUSTRATED

ALPHA/NUMERIC INDEX

PART NUMBER	AIRLINE STOCK NUMBER	FIG NUMBER	ITEM NUMBER	TOTAL REQ'D
		42L	160A	001
		42M	160A	001
		42N	-160E	001
		42P	-160B	001
		42Q	-160B	001
		42S	160A	001
		42T	-160C	001
		42U	-160B	001
		42	-160C	001
D2549010513000		01N	-001F	RF
D2549010513065		01N	-040K	001
		06J	-001K	RF
D2549010513072		01N	-090F	001
		01V	-090H	001
		13C	-001L	RF
		41C	-090H	001
		41G	-090E	001
		41R	-090F	001
D2549010513074		01M	-110C	001
		01N	-110D	001
		15E	-001B	RF
D2549010513083		01N	-200C	001
		26C	-001F	RF
D2549010513200		01N	-001A	RF
D2549010513264		01M	-030F	001
		01P	-030H	001
		41B	-030B	001
		5	-001N	RF
D2549010513266		01Q	-050G	001
		01X	-050J	001
		07E	-001F	RF
		41D	-050K	001
		41G	-050E	001
D2549010513400		01L	-001L	RF
D2549010513465		01L	-040G	001

- ITEM NOT ILLUSTRATED

ALPHA/NUMERIC INDEX

PART NUMBER	AIRLINE STOCK NUMBER	FIG NUMBER	ITEM NUMBER	TOTAL REQ'D
		06H	-001D	RF
D2549010513478		01L	-150D	001
		01S	-150D	001
		19F	-001B	RF
D2549010513600		41B	-001F	RF
			-001N	RF
D2549010513665		06H	-001J	RF
		41B	-040E	001
D2549010513666		07E	-001D	RF
		41B	-050E	001
D2549010513672		13D	-001K	RF
		41B	-090E	001
D2549010513681		01U	-180C	001
		01X	-180B	001
		22H	-001A	RF
		41B	-180D	001
		41	-180C	001
D2549010513683		01X	-200C	001
		26D	-001C	RF
D2549010513783		26D	-001F	RF
		41B	-200H	001
D2549010513800		41B	-001A	RF
D2549010513861		01Q	-010D	001
		01U	-010B	001
		2	-001J	RF
		41B	010A	001
D2549010513863		01Q	-020D	001
		01S	-020C	001
		01U	-020B	001
		01V	-020B	001
		01Z	-020B	001
		41A	-020C	001
		41B	020A	001
		41D	-020C	001
		41F	-020B	001

- ITEM NOT ILLUSTRATED

ALPHA/NUMERIC INDEX

PART NUMBER	AIRLINE STOCK NUMBER	FIG NUMBER	ITEM NUMBER	TOTAL REQ'D
		41H	-020B	001
		41J	-020C	001
		41L	-020B	001
		4	-001J	RF
D2549010513864		05A	-001H	RF
		41B	030A	001
D2549010513865		06J	-001H	RF
		41B	040A	001
D2549010513866		01Q	-050F	001
		01S	-050H	001
		01U	-050E	001
		01V	-050B	001
		01Z	-050D	001
		07E	-001J	RF
		41B	050A	001
		41D	-050G	001
		41F	-050B	001
D2549010513872		01Q	-090F	001
		01S	-090H	001
		01U	-090D	001
		01V	-090B	001
		01Z	-090E	001
		13C	-001K	RF
		41B	090A	001
D2549010513873		14	-001K	RF
		41B	100A	001
D2549010513878		01Q	-150F	001
		01S	-150F	001
		01U	-150C	001
		01V	-150B	001
		01Z	-150C	001
		19F	-001F	RF
		41A	-150D	001
		41B	150A	001
		41D	-150D	001

- ITEM NOT ILLUSTRATED

ALPHA/NUMERIC INDEX

PART NUMBER	AIRLINE STOCK NUMBER	FIG NUMBER	ITEM NUMBER	TOTAL REQ'D
		41F	-150B	001
		41H	-150E	001
		41J	-150C	001
		41L	-150C	001
		42T	-150G	001
D2549010513879		20A	-001M	RF
		41B	160A	001
D2549010513880		21	-001L	RF
		41B	170A	001
D2549010514000		01P	-001J	RF
D2549010514064		01P	-030F	001
		01X	-030D	001
		01Y	-030E	001
		05B	-001F	RF
		41G	030A	001
D2549010514065		01P	-040J	001
		06K	-001D	RF
D2549010514066		01P	-050H	001
		07E	-001N	RF
D2549010514073		01P	-100E	001
		01X	-100C	001
		01Y	-100E	001
		14A	-001D	RF
		41G	100A	001
		41N	-100E	001
		41R	-100A	001
		42J	-100B	001
		42	-100D	001
D2549010514074		01P	-110D	001
		01S	110A	001
		01T	-110J	001
		01V	110A	001
		01W	110A	001
		01X	-110E	001
		15F	-001A	RF

- ITEM NOT ILLUSTRATED

ALPHA/NUMERIC INDEX

PART NUMBER	AIRLINE STOCK NUMBER	FIG NUMBER	ITEM NUMBER	TOTAL REQ'D
D2549010514078		01P	-150G	001
		01X	-150F	001
		19E	-001N	RF
		41N	-150H	001
		42J	-150B	001
		42	-150D	001
D2549010514079		01P	-160D	001
		01X	-160E	001
		20A	-001B	RF
		41N	-160F	001
		42J	-160C	001
		42	-160D	001
D2549010514080		01P	-170F	001
		01X	-170C	001
		01Y	-170E	001
		21A	-001C	RF
		41G	170A	001
D2549010514082		01P	-190D	001
		23B	-001G	RF
D2549010514200		01T	-001H	RF
D2549010514265		01T	-040H	001
		41	-040D	001
			-040P	001
		48E	-001D	RF
			-001Q	RF
D2549010514266		01T	-050H	001
		07Y	-001G	RF
D2549010514272		01L	-090F	001
		01T	-090G	001
		13T	-001C	RF
		41F	-090L	001
		41J	-090L	001
		41L	-090H	001
		41P	-090E	001
		41R	-090H	001

- ITEM NOT ILLUSTRATED

ALPHA/NUMERIC INDEX

PART NUMBER	AIRLINE STOCK NUMBER	FIG NUMBER	ITEM NUMBER	TOTAL REQ'D
D2549010514280		41S	-090L	001
		41U	-090E	001
		41V	-090K	001
		41W	-090H	001
		41X	-090H	001
		41Y	-090K	001
		41Z	-090H	001
		41	-090D	001
		42A	-090M	001
		42C	-090H	001
		42D	-090K	001
		42F	-090F	001
		42K	-090E	001
		01L	-170B	001
		01P	-170E	001
		01Q	-170F	001
		01R	-170B	001
		01S	-170B	001
		01T	-170C	001
		01U	170A	001
		01V	170A	001
		01W	170A	001
		01X	170A	001
		01Y	170A	001
		01Z	170A	001
		21A	-001A	RF
		41A	170A	001
		41B	-170E	001
		41C	170A	001
		41D	170A	001
		41E	110A	001
		41F	-170C	001
		41G	-170C	001
		41H	170A	001
		41J	170A	001

- ITEM NOT ILLUSTRATED

ALPHA/NUMERIC INDEX

PART NUMBER	AIRLINE STOCK NUMBER	FIG NUMBER	ITEM NUMBER	TOTAL REQ'D
		41K	170A	001
		41L	170A	001
		41M	170A	001
		41N	-170B	001
		41P	170A	001
		41Q	180A	001
		41W	-170E	001
		41	170A	001
D2549010514400		01Q	-001L	RF
D2549010514464		01Q	-030G	001
		01T	-030B	001
		01U	030A	001
		01V	-030D	001
		01W	-030C	001
		05B	-001K	RF
		41C	-030C	001
		41G	-030D	001
		41J	030A	001
		41K	-030B	001
		41L	-030B	001
		41M	-030E	001
D2549010514465		01Q	-040L	001
		06L	-001G	RF
D2549010514474		01Q	-110G	001
		01X	-110B	001
		15F	-001G	RF
D2549010514476		01Q	-130F	001
		17D	-001D	RF
		42J	-130C	001
D2549010514600		01V	-001J	RF
D2549010514665		01V	-040H	001
		06N	-001J	RF
		41C	-040G	001
		41G	-040E	001
		41M	-040G	001

- ITEM NOT ILLUSTRATED

ALPHA/NUMERIC INDEX

PART NUMBER	AIRLINE STOCK NUMBER	FIG NUMBER	ITEM NUMBER	TOTAL REQ'D
D2549010514800		01V	-001K	RF
D2549010514883		01V	-200D	001
		26D	-001B	RF
D2549010600000		01Q	-001M	RF
D2549010600065		01Q	-040M	001
		01T	040A	001
		06L	-001H	RF
D2549010600074		01Q	-110H	001
		01T	110A	001
		01U	110A	001
		01W	-110H	001
		15D	-001C	RF
D2549010600200		01Q	-001F	RF
D2549010600264		01Q	-030E	001
		01S	-030D	001
		01U	-030C	001
		01V	-030B	001
		01Z	-030B	001
		05D	-001A	RF
		41A	-030D	001
		41D	-030C	001
		41F	-030B	001
		41H	-030C	001
		41J	-030C	001
		41L	-030C	001
D2549010600265		01Q	-040F	001
		01S	-040H	001
		06L	-001B	RF
D2549010600273		01Q	-100D	001
		01S	-100C	001
		01U	-100B	001
		01V	-100B	001
		01Z	-100B	001
		14A	-001A	RF
		41A	-100C	001

- ITEM NOT ILLUSTRATED

ALPHA/NUMERIC INDEX

PART NUMBER	AIRLINE STOCK NUMBER	FIG NUMBER	ITEM NUMBER	TOTAL REQ'D
		41D	-100C	001
		41F	-100B	001
		41H	-100B	001
		41J	-100C	001
		41L	-100B	001
D2549010600279		01Q	-160E	001
		01S	-160D	001
		01U	-160C	001
		01V	-160B	001
		01Z	-160C	001
		20A	-001F	RF
		41A	-160D	001
		41D	-160C	001
		41F	-160B	001
		41H	-160C	001
		41J	-160C	001
		41L	-160C	001
D2549010600400		01T	-001A	RF
D2549010600466		01T	050A	001
		07F	-001E	RF
D2549010600600		01S	-001H	RF
D2549010600665		01S	-040F	001
		01T	-040B	001
		01V	-040J	001
		01Y	-040D	001
		06M	-001C	RF
		41F	-040F	001
		41G	-040K	001
D2549010600666		01S	-050G	001
		01T	-050B	001
		01Y	-050K	001
		07F	-001D	RF
D2549010600800		01Y	-001M	RF
D2549010600865		01Y	-040K	001
		06Q	-001B	RF

- ITEM NOT ILLUSTRATED

ALPHA/NUMERIC INDEX

PART NUMBER	AIRLINE STOCK NUMBER	FIG NUMBER	ITEM NUMBER	TOTAL REQ'D
D2549010601000		01Q	-001G	RF
D2549010601066		01N	050A	001
		01Q	-050M	001
		07G	-001M	RF
		41D	-050M	001
D2549010601071		01N	080A	001
		01Q	-080E	001
		12D	-001D	RF
D2549010601200		01T	-001E	RF
D2549010601265		01T	-040E	001
		06M	-001G	RF
		41A	-040D	001
		41H	-040C	001
		41M	-040B	001
		41	-040E	001
D2549010601266		01T	-050E	001
		07F	-001G	RF
		41A	-050D	001
		41H	-050C	001
		41M	-050B	001
		41	-050D	001
D2549010601272		01T	-090E	001
		13D	-001B	RF
		41	-090E	001
D2549010601274		01T	-110D	001
		01U	-110C	001
		01X	-110F	001
		15F	-001L	RF
D2549010601283		01T	-200B	001
		26C	-001J	RF
D2549010601400		01X	-001F	RF
			-001Q	RF
D2549010601483		26D	-001D	RF
		41B	-200C	001
D2549010601583		01X	-200D	001

- ITEM NOT ILLUSTRATED

ALPHA/NUMERIC INDEX

PART NUMBER	AIRLINE STOCK NUMBER	FIG NUMBER	ITEM NUMBER	TOTAL REQ'D
		26D	-001E	RF
D2549010601600		01X	-001J	RF
			-001N	RF
D2549010601665		01X	-040J	001
		06P	-001G	RF
		41D	-040K	001
D2549010601672		01J	-090M	001
		01X	-090M	001
		13V	-001C	RF
		41G	-090M	001
D2549010601800		01X	-001K	RF
D2549010602000		01U	-001J	RF
D2549010602065		01U	-040H	001
		01X	-040D	001
		06N	-001F	RF
		41C	-040F	001
D2549010602066		01U	-050H	001
		01X	-050D	001
		07F	-001M	RF
		41C	-050F	001
D2549010602071		01U	-080C	001
		01X	-080D	001
		12D	-001E	RF
		41C	-080D	001
D2549010602074		01U	-110E	001
		01X	-110D	001
		15G	-001B	RF
		41C	-110E	001
D2549010602079		01U	-160D	001
		01X	-160D	001
		20A	-001J	RF
		41C	-160D	001
D2549010602200		01X	-001D	RF
D2549010602400		01W	-001K	RF
D2549010602465		01W	-040J	001

- ITEM NOT ILLUSTRATED

ALPHA/NUMERIC INDEX

PART NUMBER	AIRLINE STOCK NUMBER	FIG NUMBER	ITEM NUMBER	TOTAL REQ'D
		06P	-001A	RF
D2549010602600		01X	-001L	RF
D2549010602661		01X	-010C	001
		02A	-001F	RF
D2549010602665		01X	-040L	001
		06P	-001H	RF
D2549010602666		01X	-050K	001
		07G	-001C	RF
D2549010602800		01Y	-001K	RF
D2549010603000		01Z	-001A	RF
D2549010603200		41	-001E	RF
D2549010603274		15F	-001M	RF
		41A	-110F	001
		41H	-110C	001
		41M	-110B	001
		41N	-110B	001
		41P	-110G	001
		41W	110A	001
		41	-110C	001
		42A	-110B	001
		42E	-110B	001
		42G	-110H	001
		42J	-110D	001
		42K	-110F	001
		42	-110G	001
D2549010603400		01Z	-001B	RF
D2549010603472		01Z	-090B	001
		13D	-001E	RF
D2549010603600		41	-001F	RF
D2549010603665		06Q	-001G	RF
		41A	-040E	001
		41L	-040D	001
		41	-040F	001
D2549010603666		07G	-001F	RF
		41A	-050E	001

- ITEM NOT ILLUSTRATED

ALPHA/NUMERIC INDEX

PART NUMBER	AIRLINE STOCK NUMBER	FIG NUMBER	ITEM NUMBER	TOTAL REQ'D
		41L	-050D	001
		41	-050E	001
D2549010603671		12E	-001L	RF
		41	-080D	001
D2549010603674		15C	-001K	RF
		41A	-110D	001
		41B	-110F	001
		41G	-110E	001
		41L	-110B	001
		41P	-110F	001
		41V	-110B	001
		41Y	-110B	001
		41	-110D	001
D2549010603675		16C	-001F	RF
		41A	-120E	001
		41L	-120C	001
		41P	-120E	001
		41V	-120D	001
		41X	-120D	001
		41Z	-120E	001
		41	-120E	001
		42A	-120C	001
		42B	-120B	001
		42C	-120D	001
		42D	-120B	001
		42F	-120B	001
		42H	-120C	001
		42L	-120E	001
		42M	-120F	001
		42U	-120C	001
		42	-120D	001
D2549010603676		17D	-001F	RF
		41A	-130E	001
		41L	-130C	001
		41P	-130E	001

- ITEM NOT ILLUSTRATED

ALPHA/NUMERIC INDEX

PART NUMBER	AIRLINE STOCK NUMBER	FIG NUMBER	ITEM NUMBER	TOTAL REQ'D
		41V	-130D	001
		41X	-130D	001
		41Z	-130D	001
		41	-130D	001
		42A	-130C	001
		42B	-130B	001
		42C	-130D	001
		42D	-130B	001
		42F	-130B	001
		42H	-130C	001
		42L	-130D	001
		42M	-130F	001
		42U	-130C	001
		42	-130D	001
D2549010603683		26E	-001E	RF
		41A	-200B	001
		41	-200B	001
D2549010603800		41A	-001A	RF
D2549010603883		01Y	-200F	001
		01Z	-200C	001
		26E	-001A	RF
		41A	200A	001
		41C	200A	001
		41D	200A	001
		41	-200G	001
D2549010604000		41D	-001L	RF
			-001N	RF
D2549010604200		41A	-001F	RF
D2549010604400		41C	-001H	RF
D2549010604600		41C	-001G	RF
D2549010604800		41A	-001D	RF
D2549010604874		15H	-001D	RF
		41A	-110C	001
D2549010604876		01T	-130E	001
		17D	-001H	RF

- ITEM NOT ILLUSTRATED

ALPHA/NUMERIC INDEX

PART NUMBER	AIRLINE STOCK NUMBER	FIG NUMBER	ITEM NUMBER	TOTAL REQ'D
		41A	-130D	001
		41H	-130C	001
		41M	-130B	001
		41N	-130B	001
		41	-130C	001
		42E	-130F	001
		42J	-130F	001
		42K	-130D	001
		42N	-130B	001
		42R	-130F	001
D2549010604881		22F	-001B	RF
		41A	-180C	001
D2549010605000		41G	-001E	RF
D2549010605200		41K	-001B	RF
D2549010605265		06T	-001H	RF
		41K	-040B	001
D2549010605266		07J	-001F	RF
		41K	-050B	001
D2549010605272		13E	-001L	RF
		41K	-090B	001
		41R	-090G	001
D2549010605600		41A	-001J	RF
D2549010605672		13E	-001D	RF
		41A	-090G	001
		41D	-090F	001
		41P	090A	001
		41Z	-090D	001
D2549010605800		41F	-001M	RF
D2549010606000		41F	-001L	RF
			-001N	RF
			-001Q	RF
D2549010606066		01Z	-050H	001
		07G	-001H	RF
		41F	-050J	001
		41H	050A	001

- ITEM NOT ILLUSTRATED

ALPHA/NUMERIC INDEX

PART NUMBER	AIRLINE STOCK NUMBER	FIG NUMBER	ITEM NUMBER	TOTAL REQ'D
		41K	050A	001
		41L	050A	001
		41M	050A	001
D2549010606072		13V	-001F	RF
		41F	-090M	001
D2549010606081		22D	-001C	RF
		41A	-180D	001
		41C	-180B	001
		41F	-180B	001
		41G	180A	001
		41H	180A	001
		41J	180A	001
		41K	180A	001
		41L	180A	001
		41M	180A	001
		41N	-180D	001
		41P	180A	001
		41R	180A	001
		41S	180A	001
		41T	180A	001
		41U	180A	001
		41V	180A	001
		41W	-180B	001
		41X	180A	001
		41Y	180A	001
		41Z	180A	001
		42A	180A	001
		42B	180A	001
		42C	180A	001
		42D	-180B	001
		42E	180A	001
		42F	180A	001
		42G	-180B	001
		42K	-180C	001
		42	-180B	001

- ITEM NOT ILLUSTRATED

ALPHA/NUMERIC INDEX

PART NUMBER	AIRLINE STOCK NUMBER	FIG NUMBER	ITEM NUMBER	TOTAL REQ'D
D2549010606200		41G	-001F	RF
			-001N	RF
			-001P	RF
D2549010606265		06P	-001N	RF
		41G	-040F	001
D2549010606272		01A	-090G	001
		13V	-001B	RF
D2549010606400		41H	-001C	RF
D2549010606481		22F	-001C	RF
		41H	-180B	001
		41M	-180B	001
		41N	-180B	001
		42E	-180E	001
		42J	-180D	001
		42K	-180E	001
		42N	-180B	001
		42R	-180C	001
D2549010606483		26K	-001E	RF
		41H	-200B	001
D2549010606600		41J	-001H	RF
D2549010606665		06T	-001D	RF
		41J	-040G	001
D2549010606666		07J	-001H	RF
		41J	-050G	001
		41K	-050K	001
		41L	-050G	001
D2549010606800		41J	-001M	RF
D2549010606865		06U	-001C	RF
		41J	-040K	001
D2549010606866		07J	-001L	RF
		41J	-050K	001
D2549010606872		13G	-001A	RF
		41J	-090G	001
		41L	-090G	001
		41P	-090F	001

- ITEM NOT ILLUSTRATED

ALPHA/NUMERIC INDEX

PART NUMBER	AIRLINE STOCK NUMBER	FIG NUMBER	ITEM NUMBER	TOTAL REQ'D
		41S	-090D	001
		41U	-090D	001
		41V	-090B	001
D2549010607000		41J	-001N	RF
D2549010607071		12D	-001L	RF
		41J	-080F	001
		41L	-080E	001
		41M	-080E	001
		41N	-080D	001
		41P	-080C	001
		41Q	090A	001
		41R	-080B	001
		41S	-080B	001
		41T	-080B	001
		41U	-080B	001
		41V	080A	001
		41W	080A	001
		41X	-080B	001
		41Y	-080C	001
		41Z	080A	001
		42A	-080B	001
		42B	-080C	001
		42C	-080C	001
		42D	080A	001
		42E	-080C	001
		42F	-080C	001
		42G	-080B	001
		42K	-080C	001
		42	-080D	001
D2549010607200		41M	-001G	RF
D2549010607266		07K	-001C	RF
		41M	-050G	001
D2549010607272		13H	-001K	RF
		41M	-090G	001
D2549010607283		26M	-001E	RF

- ITEM NOT ILLUSTRATED

ALPHA/NUMERIC INDEX

PART NUMBER	AIRLINE STOCK NUMBER	FIG NUMBER	ITEM NUMBER	TOTAL REQ'D
		41J	-200E	001
		41M	-200F	001
		41R	-200D	001
		41V	-200C	001
		41X	-200E	001
		41Y	-200E	001
		41Z	-200C	001
		42C	-200D	001
D2549010607400		41M	-001L	RF
D2549010607471		12E	-001D	RF
		41M	-080F	001
		41N	080A	001
		41W	-080C	001
D2549010607600		41R	-001G	RF
D2549010607665		06X	-001E	RF
		41R	-040G	001
D2549010607666		07L	-001M	RF
		41R	-050F	001
		41S	-050D	001
D2549010607671		12E	-001K	RF
		41R	-080D	001
		41X	080A	001
D2549010607800		41M	-001B	RF
D2549010607871		12E	-001B	RF
		41M	-080B	001
		41N	-080B	001
D2549010607872		13H	-001D	RF
		41M	-090B	001
		41N	-090B	001
D2549010607883		26M	-001B	RF
		41M	-200B	001
		41N	-200B	001
D2549010608200		41M	-001A	RF
D2549010608265		06V	-001B	RF
		41M	040A	001

- ITEM NOT ILLUSTRATED

ALPHA/NUMERIC INDEX

PART NUMBER	AIRLINE STOCK NUMBER	FIG NUMBER	ITEM NUMBER	TOTAL REQ'D
D2549010608400		41L	-001C	RF
D2549010608465		06V	-001C	RF
		41L	-040B	001
D2549010608600		41S	-001F	RF
D2549010608665		06X	-001K	RF
		41S	-040E	001
D2549010608800		41R	-001F	RF
D2549010608865		06X	-001D	RF
		41R	-040F	001
D2549010609000		41N	-001A	RF
D2549010609061		02C	-001F	RF
		41N	010A	001
		41W	-010C	001
D2549010609064		05C	-001J	RF
		41N	030A	001
D2549010609065		06U	-001J	RF
		41N	040A	001
D2549010609066		07K	-001H	RF
		41N	050A	001
D2549010609200		41U	-001D	RF
D2549010609265		06Y	-001F	RF
		41U	-040D	001
D2549010609400		41N	-001B	RF
D2549010609464		05D	-001D	RF
		41N	-030B	001
		41Q	030A	001
		41U	030A	001
D2549010609465		06V	-001E	RF
		41N	-040B	001
D2549010609466		07K	-001J	RF
		41N	-050B	001
D2549010609600		41S	-001B	RF
D2549010609665		06X	-001H	RF
		41S	-040B	001
		41T	-040D	001

- ITEM NOT ILLUSTRATED

ALPHA/NUMERIC INDEX

PART NUMBER	AIRLINE STOCK NUMBER	FIG NUMBER	ITEM NUMBER	TOTAL REQ'D
D2549010609800		41P	-001D	RF
D2549010609865		06R	-001B	RF
		41P	-040D	001
D2549010609872		13G	-001C	RF
		41P	-090D	001
D2549010609875		16C	-001H	RF
		41P	-120C	001
		42D	-120E	001
		42G	-120C	001
		42M	-120E	001
		42Q	-120B	001
		42S	120A	001
		42U	-120B	001
D2549010609876		17D	-001J	RF
		41P	-130C	001
		42D	-130D	001
		42G	-130D	001
		42M	-130E	001
		42Q	-130B	001
		42S	130A	001
		42U	-130B	001
D2549010610000		41P	-001E	RF
			-001M	RF
D2549010610061		41P	-010F	001
D2549010610061		01C	-010B	001
		01H	-010C	001
		01L	-010D	001
		01T	-010C	001
		02D	-001C	RF
			-001S	RF
		41N	-010H	001
		41P	-010D	001
		41R	-010E	001
		41U	-010B	001
		41V	-010D	001

- ITEM NOT ILLUSTRATED

ALPHA/NUMERIC INDEX

PART NUMBER	AIRLINE STOCK NUMBER	FIG NUMBER	ITEM NUMBER	TOTAL REQ'D
		41W	-010E	001
		41X	-010E	001
		41Y	-010D	001
		41	-010H	001
D2549010610065		41P	-040M	001
D2549010610065		06W	-001D	RF
			-001N	RF
			-001P	RF
		41P	-040E	001
			-040L	001
D2549010610066		41P	-050J	001
			-050L	001
		41R	-050L	001
		49C	-001F	RF
			-001J	RF
D2549010610074		15H	-001H	RF
		41P	-110D	001
		41S	-110E	001
		42C	-110D	001
		42F	-110C	001
D2549010610200		41N	-001L	RF
D2549010610261		02C	-001A	RF
		41N	-010F	001
		41R	-010C	001
		42	-010D	001
D2549010610264		05G	-001B	RF
		41N	-030J	001
		41R	030A	001
D2549010610265		06W	-001F	RF
		41N	-040L	001
D2549010610266		07L	-001F	RF
		41N	-050K	001
D2549010610280		21B	-001B	RF
		41N	-170E	001
		41R	170A	001

- ITEM NOT ILLUSTRATED

ALPHA/NUMERIC INDEX

PART NUMBER	AIRLINE STOCK NUMBER	FIG NUMBER	ITEM NUMBER	TOTAL REQ'D
		42	-170D	001
D2549010610282		23B	-001J	RF
		41N	-190E	001
		42	-190C	001
D2549010610400		41P	-001H	RF
D2549010610465		06W	-001G	RF
		41P	-040H	001
D2549010610600		42E	-001M	RF
D2549010610665		42E	-040L	001
		42J	-040H	001
		42K	-040K	001
		42N	-040B	001
		48G	-001H	RF
D2549010610671		12G	-001F	RF
		42E	-080F	001
		42J	-080D	001
		42K	-080D	001
		42N	-080B	001
		42R	-080E	001
D2549010610672		13P	-001A	RF
		42E	-090L	001
		42K	-090K	001
D2549010610683		26R	-001E	RF
		42E	-200G	001
		42J	-200D	001
		42K	-200H	001
		42N	-200B	001
		42R	-200E	001
D2549010610800		41X	-001M	RF
D2549010610865		41X	-040K	001
		48	-001G	RF
D2549010610872		13K	-001C	RF
		41X	-090K	001
D2549010611000		41X	-001D	RF
D2549010611065		06Z	-001H	RF

- ITEM NOT ILLUSTRATED

ALPHA/NUMERIC INDEX

PART NUMBER	AIRLINE STOCK NUMBER	FIG NUMBER	ITEM NUMBER	TOTAL REQ'D
		41V	-040L	001
		41X	-040D	001
		42A	-040C	001
		42B	-040B	001
		42D	-040B	001
		42	-040F	001
D2549010611200		41X	-001A	RF
D2549010611265		41X	040A	001
		48	-001D	RF
D2549010611266		07Q	-001H	RF
		41X	-050F	001
D2549010611272		13K	-001K	RF
		41X	090A	001
D2549010611400		42	-001G	RF
D2549010611463		04A	-001Q	RF
		42J	-020B	001
		42	-020D	001
D2549010611464		05H	-001F	RF
		42J	-030D	001
		42	-030F	001
D2549010611465		42	-040E	001
		48B	-001G	RF
D2549010611466		07T	-001M	RF
		42	-050F	001
D2549010611472		13L	-001C	RF
		42C	-090D	001
		42	-090D	001
D2549010611474		15K	-001B	RF
		42	-110E	001
D2549010611600		41W	-001M	RF
D2549010611666		07Q	-001E	RF
		41W	-050H	001
D2549010611677		18	-001L	RF
		41V	-140B	001
		41W	-140C	001

- ITEM NOT ILLUSTRATED

ALPHA/NUMERIC INDEX

PART NUMBER	AIRLINE STOCK NUMBER	FIG NUMBER	ITEM NUMBER	TOTAL REQ'D
		41X	140A	001
		41Y	-140B	001
		41Z	140A	001
		42A	140A	001
		42B	140A	001
		42C	140A	001
		42D	-140B	001
		42E	140A	001
		42F	140A	001
		42G	140A	001
		42H	140A	001
		42J	140A	001
		42K	140A	001
		42L	140A	001
		42M	140A	001
		42N	140A	001
		42P	140A	001
		42Q	140A	001
		42R	140A	001
		42S	140A	001
		42T	140A	001
		42U	140A	001
		42	140A	001
D2549010611800		41Z	-001D	RF
D2549010611865		06R	-001E	RF
		41Z	-040D	001
D2549010612000		41W	-001C	RF
D2549010612064		05G	-001F	RF
		41W	-030C	001
D2549010612065		06Y	-001L	RF
		41W	-040C	001
D2549010612066		07R	-001E	RF
		41W	-050C	001
D2549010612080		21B	-001G	RF
		41W	-170C	001

- ITEM NOT ILLUSTRATED

ALPHA/NUMERIC INDEX

PART NUMBER	AIRLINE STOCK NUMBER	FIG NUMBER	ITEM NUMBER	TOTAL REQ'D
D2549010612200		41V	-001H	RF
D2549010612400		41Z	-001A	RF
D2549010612465		41Z	040A	001
		42A	-040F	001
		48B	-001A	RF
D2549010612600		41Z	-001J	RF
			-001N	RF
D2549010613000		42C	-001D	RF
D2549010613065		42C	-040D	001
		42F	-040H	001
		48	-001L	RF
D2549010613200		41Z	-001G	RF
D2549010613264		05H	-001A	RF
		41Z	-030D	001
		42E	-030F	001
		42G	-030F	001
		42H	030A	001
		42J	-030F	001
		42N	-030D	001
		42P	-030D	001
		42Q	-030C	001
		42R	-030D	001
		42S	-030D	001
		42	-030H	001
D2549010613265		41Z	-040G	001
		48	-001J	RF
D2549010613266		07S	-001K	RF
		41Z	-050G	001
D2549010613272		13K	-001E	RF
		41Z	-090G	001
D2549010613278		19F	-001L	RF
		41Z	-150C	001
		42G	-150E	001
D2549010613279		20B	-001E	RF
		41Z	-160C	001

- ITEM NOT ILLUSTRATED

ALPHA/NUMERIC INDEX

PART NUMBER	AIRLINE STOCK NUMBER	FIG NUMBER	ITEM NUMBER	TOTAL REQ'D
		42G	-160E	001
D2549010613400		41Z	-001H	RF
D2549010613466		07S	-001L	RF
		41Z	-050H	001
D2549010613471		12D	-001N	RF
		41Z	-080G	001
		42B	-080E	001
D2549010613600		42B	-001G	RF
D2549010613661		02D	-001F	RF
		42B	-010D	001
		42P	-010B	001
		42Q	010A	001
		42R	-010C	001
		42S	010A	001
		42T	010A	001
		42U	010A	001
D2549010613665		42B	-040G	001
		42N	-040K	001
		48K	-001M	RF
D2549010613666		07U	-001C	RF
		41Z	-050M	001
		42A	-050L	001
		42B	-050F	001
		42F	-050L	001
		42N	-050K	001
		49B	-001K	RF
D2549010613672		13Q	-001M	RF
		42B	-090G	001
		42N	-090H	001
D2549010613800		42A	-001L	RF
D2549010613861		02C	-001H	RF
			-001P	RF
		41Z	-010B	001
		42A	-010B	001
		42B	-010C	001

- ITEM NOT ILLUSTRATED

ALPHA/NUMERIC INDEX

PART NUMBER	AIRLINE STOCK NUMBER	FIG NUMBER	ITEM NUMBER	TOTAL REQ'D
		42C	010A	001
		42D	-010D	001
			010A	001
		42E	-010B	001
		42F	-010B	001
		42G	010A	001
		42H	-010B	001
		42J	010A	001
		42K	010A	001
		42L	010A	001
		42M	010A	001
		42N	-010B	001
		42P	010A	001
		42	-010F	001
D2549010613865		06Z	-001M	RF
		41Z	-040J	001
		42A	-040L	001
D2549010614200		42	-001H	RF
D2549010614400		42E	-001C	RF
D2549010614600		42C	-001K	RF
D2549010614665		42C	-040L	001
		48C	-001N	RF
D2549010614666		07V	-001B	RF
		42C	-050J	001
D2549010614800		42D	-001A	RF
D2549020300000		42T	-001B	RF
D2549020300065		42T	-040B	001
		48F	-001C	RF
D2549020300400		42U	-001C	RF
D2549020300600		42S	-001F	RF
D2549020300674		15S	-001A	RF
		42S	-110E	001
		42T	-110D	001
D2549020300800		42P	-001H	RF
D2549020300874		15Q	-001E	RF

- ITEM NOT ILLUSTRATED

ALPHA/NUMERIC INDEX

PART NUMBER	AIRLINE STOCK NUMBER	FIG NUMBER	ITEM NUMBER	TOTAL REQ'D
		42P	-110F	001
D2549020301000		42S	-001K	RF
D2549020301600		42U	-001D	RF
D2549020301665		42U	-040D	001
		48M	-001L	RF
D2549020301683		26U	-001E	RF
		42U	-200D	001
D2549020301800		42T	-001H	RF
D2549020302000		42S	-001D	RF
D2549020302074		15Q	-001F	RF
		42S	-110C	001
		42T	-110C	001
		42U	-110C	001
D2549020302800		42P	-001M	RF
D2549020302866		42P	-050H	001
		49B	-001F	RF
D2549020400000		42D	-001L	RF
D2549020400065		42D	-040L	001
		48C	-001J	RF
D2549020400072		13M	-001D	RF
		42D	-090L	001
D2549020400078		19H	-001B	RF
		42D	-150D	001
		42F	-150E	001
		42Q	-150D	001
		42U	-150C	001
D2549020400200		42C	-001L	RF
D2549020400265		42C	-040K	001
		48C	-001A	RF
D2549020400266		07V	-001C	RF
		42C	-050K	001
D2549020400400		42G	-001D	RF
D2549020400600		42G	-001F	RF
D2549020400666		07W	-001G	RF
		42G	-050F	001

- ITEM NOT ILLUSTRATED

ALPHA/NUMERIC INDEX

PART NUMBER	AIRLINE STOCK NUMBER	FIG NUMBER	ITEM NUMBER	TOTAL REQ'D
		42N	050A	001
		42S	-050F	001
		42T	-050H	001
D2549020400672		13N	-001G	RF
		42G	-090F	001
		42K	-090L	001
		42N	-090J	001
		42Q	-090C	001
			-090G	001
		42R	-090C	001
		42S	-090D	001
		42T	-090D	001
D2549020400800		42G	-001G	RF
D2549020400861		02B	-001G	RF
		42E	-010C	001
		42G	-010C	001
		42K	-010F	001
		42L	-010C	001
		42M	-010B	001
		42N	010A	001
D2549020400865		42G	-040G	001
		48G	-001D	RF
D2549020400866		07W	-001H	RF
		42G	-050G	001
D2549020400871		12G	-001D	RF
		42G	-080E	001
		42H	-080G	001
		42M	-080D	001
		42Q	-080B	001
		42S	080A	001
		42U	-080B	001
D2549020400872		13N	-001H	RF
		42G	-090G	001
D2549020400874		15L	-001K	RF
		42G	-110F	001

- ITEM NOT ILLUSTRATED

ALPHA/NUMERIC INDEX

PART NUMBER	AIRLINE STOCK NUMBER	FIG NUMBER	ITEM NUMBER	TOTAL REQ'D
D2549020400883		26R	-001B	RF
		42G	-200F	001
		42H	200A	001
		42K	-200D	001
		42L	-200C	001
		42M	-200C	001
		42Q	200A	001
		42R	-200B	001
		42S	200A	001
		42T	-200D	001
		42U	-200B	001
D2549020401000		42M	-001K	RF
D2549020401200		42E	-001F	RF
D2549020401265		42E	-040F	001
		42P	-040B	001
		48D	-001D	RF
D2549020401266		07W	-001A	RF
		42E	-050F	001
		42H	-050J	001
		42J	-050G	001
		42L	050A	001
		42M	-050G	001
		42P	-050B	001
D2549020401269		01C	-060B	001
		01D	-060B	001
		01G	-060B	001
		01H	-060B	001
		01K	-060B	001
		01L	-060B	001
		01N	-060B	001
		01Q	-060B	001
		01S	-060B	001
		01T	-060B	001
		01V	-060B	001
		01W	-060B	001

- ITEM NOT ILLUSTRATED

ALPHA/NUMERIC INDEX

PART NUMBER	AIRLINE STOCK NUMBER	FIG NUMBER	ITEM NUMBER	TOTAL REQ'D
		01Z	-060B	001
		10A	-001C	RF
		41B	-060B	001
		41D	-060B	001
		41F	-060B	001
		41G	-060B	001
		41J	-060B	001
		41K	-060B	001
		41L	-060B	001
		41M	-060B	001
		41N	-060B	001
		41P	-060B	001
		41R	-060B	001
		41S	-060B	001
		41T	-060B	001
		41U	-060B	001
		41V	-060B	001
		41W	-060B	001
		41X	-060B	001
		41Y	-060B	001
		41Z	-060B	001
		41	-060B	001
		42A	-060B	001
		42B	-060B	001
		42C	-060B	001
		42D	-060B	001
		42E	-060B	001
		42F	-060B	001
		42G	060A	001
		42H	060A	001
		42J	060A	001
		42K	060A	001
		42L	060A	001
		42M	060A	001
		42N	060A	001

- ITEM NOT ILLUSTRATED

ALPHA/NUMERIC INDEX

PART NUMBER	AIRLINE STOCK NUMBER	FIG NUMBER	ITEM NUMBER	TOTAL REQ'D
		42P	060A	001
		42Q	060A	001
		42R	060A	001
		42S	060A	001
		42T	060A	001
		42U	060A	001
D2549020401272		13N	-001A	RF
		42E	-090F	001
		42P	-090B	001
D2549020401274		15L	-001B	RF
		42E	-110E	001
		42P	-110B	001
D2549020401281		22D	-001E	RF
		42E	-180C	001
		42F	-180C	001
		42G	180A	001
		42H	180A	001
		42J	180A	001
		42K	180A	001
		42L	180A	001
		42M	180A	001
		42N	180A	001
		42P	180A	001
		42Q	180A	001
		42R	180A	001
		42S	180A	001
		42T	180A	001
		42U	180A	001
D2549020401283		26R	-001C	RF
		42E	-200E	001
		42P	-200B	001
D2549020401400		42K	-001M	RF
			-001N	RF
D2549020401465		42K	-040L	001
		42S	-040D	001

- ITEM NOT ILLUSTRATED

ALPHA/NUMERIC INDEX

PART NUMBER	AIRLINE STOCK NUMBER	FIG NUMBER	ITEM NUMBER	TOTAL REQ'D
		48H	-001H	RF
D2549020401466		07Z	-001J	RF
		42K	-050L	001
			-050M	001
		42S	-050D	001
		49C	-001B	RF
D2549020401600		42H	-001M	RF
D2549020401665		42H	-040L	001
		48H	-001B	RF
D2549020401666		07Z	-001B	RF
		42H	-050K	001
D2549020401672		13P	-001K	RF
		42H	-090L	001
		42Q	-090B	001
		42S	090A	001
		42U	-090B	001
D2549020401674		15M	-001A	RF
		42H	-110F	001
		42L	-110B	001
		42Q	-110B	001
		42S	110A	001
D2549020402000		42J	-001A	RF
		42P	-001N	RF
D2549020402065		42J	040A	001
		42P	-040H	001
		48H	-001A	RF
D2549020402066		07Z	-001A	RF
		42J	050A	001
		42L	-050C	001
		42N	-050J	001
		42R	-050H	001
		42S	-050J	001
		42T	-050K	001
D2549020402072		13S	-001J	RF
		42J	090A	001

- ITEM NOT ILLUSTRATED

ALPHA/NUMERIC INDEX

PART NUMBER	AIRLINE STOCK NUMBER	FIG NUMBER	ITEM NUMBER	TOTAL REQ'D
		42P	-090D	001
		42R	-090E	001
		42S	-090H	001
D2549020402200		42G	-001J	RF
D2549020402265		42G	-040J	001
		48G	-001G	RF
D2549020402266		07X	-001C	RF
		42G	-050J	001
		42J	-050D	001
		42K	-050G	001
D2549020402272		13N	-001M	RF
		42G	-090J	001
		42J	-090D	001
		42K	-090G	001
D2549020402283		26R	-001D	RF
		42G	-200G	001
		42J	-200B	001
		42K	-200E	001
D2549020402400		42L	-001B	RF
D2549020402465		42L	-040B	001
		48H	-001J	RF
D2549020402466		07Z	-001K	RF
		42L	-050B	001
D2549020402472		13Q	-001D	RF
		42L	-090B	001
D2549020402600		42E	-001H	RF
D2549020402665		42E	-040H	001
		42J	-040B	001
		42P	-040G	001
		48D	-001G	RF
D2549020402666		07W	-001K	RF
		42E	-050H	001
		42J	-050B	001
D2549020402672		13N	-001K	RF
		42E	-090H	001

- ITEM NOT ILLUSTRATED

ALPHA/NUMERIC INDEX

PART NUMBER	AIRLINE STOCK NUMBER	FIG NUMBER	ITEM NUMBER	TOTAL REQ'D
D2549020402674		15L	-001L	RF
		42E	-110G	001
		42H	-110D	001
		42J	-110B	001
		42M	-110C	001
		42P	-110H	001
		42R	-110B	001
D2549020403000		42E	-001L	RF
D2549020403066		07X	-001B	RF
		42E	-050L	001
D2549020403200		42G	-001L	RF
D2549020403265		42G	-040L	001
		42H	-040G	001
		42L	-040M	001
		48G	-001J	RF
D2549020403266		07X	-001E	RF
		42G	-050L	001
		42H	-050G	001
		42L	-050J	001
		42N	-050M	001
D2549020403271		12G	-001G	RF
		42G	-080G	001
		42H	-080E	001
		42L	-080G	001
		42M	080A	001
		42N	-080C	001
		42R	-080C	001
		42S	-080B	001
		42T	080A	001
D2549020403272		13N	-001E	RF
		42G	090A	001
		42H	-090H	001
		42L	-090J	001
D2549020403400		42E	-001J	RF
D2549020403465		42E	-040J	001

- ITEM NOT ILLUSTRATED

ALPHA/NUMERIC INDEX

PART NUMBER	AIRLINE STOCK NUMBER	FIG NUMBER	ITEM NUMBER	TOTAL REQ'D
		42P	-040D	001
		48G	-001F	RF
D2549020403466		07W	-001M	RF
		42E	-050J	001
		42P	-050C	001
D2549020403474		15L	-001D	RF
		42E	-110H	001
		42P	-110C	001
D2549020403600		42M	-001B	RF
D2549020403665		42M	-040B	001
		48K	-001F	RF
D2549020403800		42D	-001H	RF
D2549020403865		42D	-040H	001
		48C	-001G	RF
D2549020403866		07V	-001G	RF
		42D	-050H	001
D2549020403874		15K	-001E	RF
		41Z	-110F	001
		42D	-110F	001
		42F	-110E	001
D2549020404000		42F	-001L	RF
D2549020404065		42F	-040K	001
		42G	-040F	001
		42T	-040H	001
		48C	-001M	RF
D2549020404066		07W	-001C	RF
		42F	-050J	001
		42J	-050F	001
		42L	-050E	001
		42M	-050C	001
		42R	-050D	001
D2549020404072		13N	-001C	RF
		42F	-090J	001
D2549020404074		15L	-001E	RF
		42F	-110H	001

- ITEM NOT ILLUSTRATED

ALPHA/NUMERIC INDEX

PART NUMBER	AIRLINE STOCK NUMBER	FIG NUMBER	ITEM NUMBER	TOTAL REQ'D
		42G	-110J	001
		42H	110A	001
		42K	-110B	001
			-110G	001
		42L	-110E	001
		42M	-110E	001
		42N	-110J	001
		42Q	-110E	001
D2549020404200		42F	-001D	RF
D2549020404400		42F	-001B	RF
D2549020404483		26P	-001E	RF
		42F	-200B	001
D2549020404600		42E	-001B	RF
D2549020404800		42F	-001J	RF
D2549020405000		42F	-001A	RF
D2549020405200		42F	-001E	RF
D2549020405400		42D	-001D	RF
D2549020405472		13L	-001L	RF
		42B	090A	001
		42D	-090D	001
		42G	-090H	001
D2549020405600		42D	-001B	RF
D2549020405800		42F	-001F	RF
D2549020406000		42H	-001B	RF
D2549020406066		07X	-001H	RF
		42H	-050B	001
		42M	-050B	001
		42Q	-050K	001
D2549020406200		42	-001M	RF
D2549020406400		42H	-001F	RF
D2549020406472		13P	-001E	RF
		42H	-090F	001
D2549020406600		42K	-001D	RF
D2549020406665		42K	-040D	001
		42Q	-040F	001

- ITEM NOT ILLUSTRATED

ALPHA/NUMERIC INDEX

PART NUMBER	AIRLINE STOCK NUMBER	FIG NUMBER	ITEM NUMBER	TOTAL REQ'D
		42S	-040C	001
		48H	-001F	RF
D2549020406666		07X	-001D	RF
		42K	-050D	001
		42T	-050F	001
D2549020406800		42K	-001A	RF
D2549020406865		42K	040A	001
		48H	-001C	RF
D2549020406866		07Z	-001C	RF
		42K	050A	001
D2549020406872		13P	-001L	RF
		42K	090A	001
D2549020406883		26R	-001G	RF
		42K	200A	001
D2549020407000		42J	-001B	RF
D2549020407072		13P	-001J	RF
		42J	-090B	001
D2549020407200		42K	-001G	RF
D2549020407265		42J	-040D	001
		42K	-040G	001
		48H	-001G	RF
D2549020407400		42H	-001H	RF
D2549020407478		19J	-001A	RF
		42H	-150C	001
		42L	-150F	001
		42N	-150D	001
		42T	-150E	001
D2549020407600		42G	-001A	RF
D2549020407665		42G	040A	001
		48D	-001E	RF
D2549020407666		42G	050A	001
		49C	-001C	RF
D2549020407674		15L	-001A	RF
		42G	110A	001
D2549020407800		42J	-001C	RF

- ITEM NOT ILLUSTRATED

ALPHA/NUMERIC INDEX

PART NUMBER	AIRLINE STOCK NUMBER	FIG NUMBER	ITEM NUMBER	TOTAL REQ'D
D2549020408000		42M	-001E	RF
D2549020408065		42M	-040E	001
		48K	-001G	RF
D2549020408066		42M	-050J	001
		49C	-001A	RF
D2549020408200		42K	-001F	RF
D2549020408265		42K	-040F	001
		48G	-001N	RF
D2549020408266		07Z	-001F	RF
		42K	-050F	001
D2549020408274		15L	-001M	RF
		42K	-110E	001
D2549020408600		42L	-001E	RF
D2549020408665		42L	-040E	001
		42M	-040C	001
		42R	-040D	001
		42T	-040F	001
		48H	-001L	RF
D2549020408800		42K	-001C	RF
D2549020408865		42K	-040C	001
		48H	-001E	RF
D2549020408866		07Z	-001E	RF
		42K	-050C	001
D2549020408872		13Q	-001A	RF
		42K	-090C	001
D2549020409000		42J	-001G	RF
D2549020409072		13Q	-001G	RF
		42J	-090F	001
		42P	-090F	001
D2549020409200		42L	-001G	RF
D2549020409265		42L	-040G	001
		42U	-040C	001
		48K	-001A	RF
D2549020409266		07Z	-001M	RF
		42L	-050F	001

- ITEM NOT ILLUSTRATED

ALPHA/NUMERIC INDEX

PART NUMBER	AIRLINE STOCK NUMBER	FIG NUMBER	ITEM NUMBER	TOTAL REQ'D
		42U	-050C	001
D2549020409272		13Q	-001E	RF
		42L	-090F	001
		42U	-090C	001
D2549020409274		15K	-001C	RF
		42	-110J	001
D2549020409400		42M	-001A	RF
D2549020409465		42M	040A	001
		48K	-001E	RF
D2549020409466		42M	050A	001
		42N	-050C	001
		49	-001B	RF
D2549020409474		15P	-001A	RF
		42M	110A	001
D2549020409476		17D	-001M	RF
		42M	130A	001
D2549020409600		42P	-001A	RF
D2549020409800		42N	-001A	RF
D2549020409865		42N	040A	001
		42S	-040F	001
		48K	-001K	RF
D2549020409872		13Q	-001L	RF
		42N	090A	001
		42S	-090E	001
D2549020409883		26R	-001L	RF
		42B	-200E	001
		42M	-200E	001
		42N	200A	001
		42S	-200D	001
		42T	-200E	001
D2549020410200		42M	-001M	RF
D2549020410265		42M	-040K	001
			-040L	001
		48J	-001D	RF
			-001P	RF

- ITEM NOT ILLUSTRATED

ALPHA/NUMERIC INDEX

PART NUMBER	AIRLINE STOCK NUMBER	FIG NUMBER	ITEM NUMBER	TOTAL REQ'D
D2549020410266		42M	-050K	001
		49C	-001G	RF
D2549020410272		13S	-001D	RF
		42M	-090K	001
		42T	-090E	001
D2549020410400		42N	-001C	RF
D2549020410465		42N	-040C	001
		48L	-001A	RF
D2549020410600		42N	-001K	RF
D2549020410800		42Q	-001A	RF
D2549020410865		42Q	040A	001
		48L	-001G	RF
D2549020410872		13S	-001H	RF
		42P	-090E	001
		42Q	-090K	001
		42R	090A	001
		42S	-090B	001
		42U	-090D	001
D2549020411000		42Q	-001F	RF
D2549020411066		42Q	-050F	001
		49A	-001D	RF
D2549020411200		42Q	-001H	RF
D2549020411261		02D	-001J	RF
		42Q	-010D	001
D2549020411263		04A	-001X	RF
		42Q	-020D	001
D2549020411264		05J	-001C	RF
		42Q	-030F	001
D2549020411265		42Q	-040H	001
		48A	-001J	RF
D2549020411266		42Q	-050H	001
		49	-001G	RF
D2549020411273		14A	-001K	RF
		42Q	-100D	001
D2549020411274		15M	-001G	RF

- ITEM NOT ILLUSTRATED

ALPHA/NUMERIC INDEX

PART NUMBER	AIRLINE STOCK NUMBER	FIG NUMBER	ITEM NUMBER	TOTAL REQ'D
		42Q	-110G	001
D2549020411278		19H	-001F	RF
		42Q	-150E	001
D2549020411279		20B	-001H	RF
		42Q	-160D	001
D2549020411280		21B	-001K	RF
		42Q	-170C	001
D2549020411400		42P	-001E	RF
D2549020411465		42P	-040E	001
		48H	-001N	RF
D2549020411466		42P	-050D	001
		49A	-001A	RF
D2549020411600		42Q	-001M	RF
D2549020411665		42Q	-040L	001
		48L	-001K	RF
D2549020411666		42Q	-050J	001
		49	-001M	RF
D2549020411800		42R	-001B	RF
D2549020411865		42R	-040B	001
		48L	-001L	RF
D2549020411866		42R	-050B	001
		49A	-001C	RF
D2549020412000		42R	-001E	RF
D2549020412065		42R	-040E	001
		48A	-001L	RF
D2549020412066		42R	-050E	001
		42S	-050B	001
		49A	-001E	RF
D2549020412200		42R	-001A	RF
D2549020412265		42R	040A	001
		48A	-001K	RF
D2549020412266		42R	050A	001
		42U	-050D	001
		49A	-001B	RF
D2549020412400		42S	-001B	RF

- ITEM NOT ILLUSTRATED

ALPHA/NUMERIC INDEX

PART NUMBER	AIRLINE STOCK NUMBER	FIG NUMBER	ITEM NUMBER	TOTAL REQ'D
D2549020412465		42S	-040B	001
		48M	-001D	RF
D2549020412600		42R	-001D	RF
D2549020412674		15Q	-001A	RF
		42R	-110G	001
		42S	-110B	001
		42T	110A	001
		42U	110A	001
D2549020412800		42R	-001L	RF
D2549020412865		42R	-040L	001
		48F	-001B	RF
D2549020412874		15Q	-001D	RF
		42R	-110E	001
D2549020413000		42R	-001H	RF
D2549020413065		42R	-040H	001
		42S	-040K	001
		48L	-001N	RF
D2549020413200		42R	-001K	RF
D2549020413265		42R	-040K	001
		48M	-001A	RF
D2549020413266		42R	-050K	001
		49A	-001K	RF
D2549020413400		42P	-001J	RF
D2549020413466		42P	-050F	001
		49B	-001A	RF
D2549020413474		15R	-001C	RF
		42P	-110G	001
D2549020413600		42P	-001G	RF
D2549020413800		42U	-001A	RF
			-001K	RF
D2549020413865		42U	040A	001
		48M	-001J	RF
D2549020413866		42U	050A	001
		49B	-001E	RF
D2549020413872		13S	-001M	RF

- ITEM NOT ILLUSTRATED

ALPHA/NUMERIC INDEX

PART NUMBER	AIRLINE STOCK NUMBER	FIG NUMBER	ITEM NUMBER	TOTAL REQ'D
		42U	090A	001
D2549020414000		42S	-001L	RF
			-001N	RF
D2549020414065		42S	-040L	001
		48M	-001F	RF
D2549020414066		42S	-050K	001
		49B	-001B	RF
D2549020414166		42S	-050M	001
		49B	-001M	RF
D2549020414200		42T	-001E	RF
D2549020414265		42T	-040E	001
			-040N	001
		48M	-001H	RF
			-001N	RF
D2549020414600		42T	-001A	RF
D2549020414665		42T	040A	001
		48M	-001G	RF
D2549020414666		42T	050A	001
		49B	-001C	RF
D2549020414672		13S	-001L	RF
		42T	090A	001
D2549020414683		26U	-001D	RF
		42T	200A	001
D2549020414800		42S	-001E	RF
D2549020414865		42S	-040E	001
		48M	-001E	RF
D2549020414874		15R	-001B	RF
		42S	-110D	001
D2549020500000		1	-001B	RF
D2549020500063		01A	-020B	001
		01B	-020B	001
		01D	-020B	001
		01E	-020B	001
		01F	-020B	001
		1	-020B	001

- ITEM NOT ILLUSTRATED

ALPHA/NUMERIC INDEX

PART NUMBER	AIRLINE STOCK NUMBER	FIG NUMBER	ITEM NUMBER	TOTAL REQ'D
		4	-001B	RF
D2549020500064		01A	-030C	001
			-030H	001
		01B	-030B	001
		01E	-030B	001
		01F	-030C	001
		1	-030B	001
		5	-001B	RF
			-001Q	RF
D2549020500065		01A	-040H	001
			-040L	001
		01B	-040H	001
		01E	-040C	001
		01F	040A	001
		1	-040B	001
		6	-001B	RF
			-001Q	RF
D2549020500066		01A	-050J	001
		01B	-050F	001
		01E	-050C	001
		01F	-050J	001
		1	-050B	001
		7	-001B	RF
D2549020500071		01A	-080E	001
		01B	-080E	001
		12A	-001N	RF
		1	-080B	001
D2549020500072		01A	-090F	001
		01B	-090F	001
		01D	-090E	001
		01E	-090C	001
		01F	-090C	001
		13	-001B	RF
		1	-090B	001
D2549020500073		01A	-100B	001

- ITEM NOT ILLUSTRATED

ALPHA/NUMERIC INDEX

PART NUMBER	AIRLINE STOCK NUMBER	FIG NUMBER	ITEM NUMBER	TOTAL REQ'D
		01B	-100B	001
		01D	-100B	001
		01E	-100B	001
		01F	-100B	001
		14	-001B	RF
		1	-100B	001
D2549020500074		01A	-110D	001
		01B	-110B	001
		01D	-110C	001
		01E	-110C	001
		01F	-110B	001
		15A	-001A	RF
		1	-110B	001
D2549020500075		01A	-120E	001
		01B	-120E	001
		01D	-120D	001
		01E	-120C	001
		01F	-120C	001
		16	-001B	RF
		1	-120B	001
D2549020500076		01A	-130E	001
		01B	-130E	001
		01D	-130D	001
		01E	-130C	001
		01F	-130C	001
		17A	-001A	RF
		1	-130B	001
D2549020500077		01A	-140B	001
		01B	-140C	001
		01E	-140B	001
		01F	-140C	001
		18	-001B	RF
		1	-140B	001
		41T	-140C	001
D2549020500078		01A	-150E	001

- ITEM NOT ILLUSTRATED

ALPHA/NUMERIC INDEX

PART NUMBER	AIRLINE STOCK NUMBER	FIG NUMBER	ITEM NUMBER	TOTAL REQ'D
		01B	-150F	001
		01E	-150C	001
		01F	-150J	001
		19D	-001A	RF
		1	-150B	001
D2549020500079		01A	-160C	001
		01B	-160C	001
		01D	-160B	001
		01E	-160C	001
		01F	-160B	001
		01J	-160B	001
		01P	160A	001
		1	-160B	001
		20	-001B	RF
D2549020500080		01A	-170C	001
		01B	170A	001
		01D	-170B	001
		01E	-170B	001
		01F	-170B	001
		01G	-170B	001
		1	-170B	001
		21	-001B	RF
D2549020500081		01A	-180C	001
		01B	-180B	001
		01E	-180B	001
		01F	-180C	001
		1	-180B	001
		22A	-001A	RF
D2549020500200		1	-001C	RF
		41T	-001H	RF
D2549020500265		01M	-040L	001
		06A	-001N	RF
		1	-040C	001
		41T	-040H	001
		48J	-001M	RF

- ITEM NOT ILLUSTRATED

ALPHA/NUMERIC INDEX

PART NUMBER	AIRLINE STOCK NUMBER	FIG NUMBER	ITEM NUMBER	TOTAL REQ'D
		6	-001C	RF
D2549020500266		01B	-050H	001
		07B	-001M	RF
		1	-050C	001
		41T	-050G	001
		7	-001C	RF
D2549020500271		01B	-080H	001
		12B	-001F	RF
		1	-080F	001
		41T	-080E	001
D2549020500272		01A	-090E	001
		01B	090A	001
		01C	-090D	001
		01D	-090B	001
		01E	-090E	001
		01F	-090D	001
		01G	-090G	001
		01H	-090E	001
		13	-001C	RF
		1	-090C	001
		41B	-090B	001
D2549020500274		01A	110A	001
		01B	110A	001
		01C	-110C	001
			110A	001
		01D	110A	001
		01E	-110B	001
		01F	110A	001
		01G	-110B	001
		01H	-110C	001
		01J	-110C	001
		01K	-110F	001
		01L	-110G	001
		01M	-110G	001
		01N	-110F	001

- ITEM NOT ILLUSTRATED

ALPHA/NUMERIC INDEX

PART NUMBER	AIRLINE STOCK NUMBER	FIG NUMBER	ITEM NUMBER	TOTAL REQ'D
		15	-001B	RF
			-001J	RF
		1	-110C	001
		41B	-110B	001
		41T	-110F	001
			-110G	001
D2549020500275		01B	120A	001
		16	-001C	RF
		1	-120C	001
		41T	-120E	001
D2549020500276		01B	130A	001
		17A	-001B	RF
		1	-130C	001
		41T	-130E	001
D2549020500278		19A	-001B	RF
		1	-150C	001
		41T	-150E	001
D2549020500400		1	-001F	RF
D2549020500465		01B	-040G	001
		1	-040F	001
		6	-001F	RF
D2549020500471		01B	080A	001
		12	-001C	RF
		1	-080C	001
D2549020500478		01B	150A	001
		19B	-001A	RF
		1	-150G	001
D2549020500600		01A	-001J	RF
D2549020500661		01A	-010B	001
			-010E	001
		01B	-010B	001
		01D	-010B	001
		01E	-010B	001
		01F	-010B	001
		1	-010B	001

- ITEM NOT ILLUSTRATED

ALPHA/NUMERIC INDEX

PART NUMBER	AIRLINE STOCK NUMBER	FIG NUMBER	ITEM NUMBER	TOTAL REQ'D
		2	-001B	RF
			-001P	RF
D2549020500800		1	-001J	RF
D2549020501000		01A	-001K	RF
			-001R	RF
D2549020501200		01B	-001M	RF
		1	-001L	RF
			-001N	RF
D2549020501400		01A	-001L	RF
D2549020501483		01A	-200D	001
		26A	-001B	RF
D2549020501600		01A	-001F	RF
D2549020501666		01A	-050F	001
		01B	-050E	001
		07A	-001B	RF
D2549020501800		1	-001H	RF
D2549020501865		1	-040G	001
		6	-001H	RF
D2549020501883		1	-200H	001
		26A	-001F	RF
D2549020502000		1	-001K	RF
D2549020502200		41K	-001L	RF
D2549020502400		01B	-001A	RF
D2549020502465		01B	040A	001
		06B	-001A	RF
D2549020502600		01B	-001E	RF
D2549020502665		01B	-040E	001
		06B	-001D	RF
D2549020502666		01A	-050G	001
		01B	-050G	001
		01D	-050E	001
		7	-001N	RF
D2549020502800		01A	-001M	RF
D2549020502883		01A	-200E	001
		26	-001F	RF

- ITEM NOT ILLUSTRATED

ALPHA/NUMERIC INDEX

PART NUMBER	AIRLINE STOCK NUMBER	FIG NUMBER	ITEM NUMBER	TOTAL REQ'D
D2549020503000		01B	-001D	RF
			-001P	RF
D2549020503065		01B	-040D	001
			-040M	001
		01E	-040G	001
		06B	-001C	RF
			-001R	RF
D2549020503078		01B	-150D	001
		01D	-150C	001
		01E	-150G	001
		19B	-001H	RF
D2549020503200		01B	-001H	RF
D2549020503283		01B	-200D	001
		01D	200A	001
		01E	-200B	001
		01F	-200B	001
		26A	-001C	RF
D2549020503400		01B	-001G	RF
		01K	-001L	RF
D2549020503465		01B	-040K	001
		01K	-040L	001
		48E	-001A	RF
D2549020503472		01B	-090G	001
		01K	-090J	001
		13	-001M	RF
D2549020503600		01C	-001E	RF
D2549020503665		01C	-040E	001
		01E	-040E	001
		06B	-001J	RF
D2549020503666		01C	-050E	001
		01E	-050E	001
		01F	050A	001
		01H	-050G	001
		01K	-050J	001
		01M	-050H	001

- ITEM NOT ILLUSTRATED

ALPHA/NUMERIC INDEX

PART NUMBER	AIRLINE STOCK NUMBER	FIG NUMBER	ITEM NUMBER	TOTAL REQ'D
		07Y	-001C	RF
D2549020503671		01C	-080J	001
		12B	-001D	RF
D2549020503678		01A	-150G	001
		01B	-150H	001
		01C	-150D	001
		01D	150A	001
		01E	-150E	001
		01F	-150D	001
		01H	-150D	001
		01L	-150F	001
		19B	-001C	RF
D2549020503800		01C	-001K	RF
D2549020503865		01C	-040K	001
		06A	-001B	RF
D2549020504000		01D	-001A	RF
			-001P	RF
D2549020504064		01D	030A	001
		05A	-001A	RF
D2549020504065		01D	040A	001
		06C	-001A	RF
D2549020504066		01D	050A	001
		07A	-001J	RF
D2549020504072		01D	090A	001
		13A	-001D	RF
D2549020504076		01D	130A	001
		17B	-001B	RF
D2549020504165		01D	-040P	001
		06C	-001P	RF
D2549020504166		01D	-050H	001
		07A	-001P	RF
D2549020504200		01D	-001D	RF
D2549020504265		01D	-040D	001
		06C	-001C	RF
D2549020504400		01E	-001G	RF

- ITEM NOT ILLUSTRATED

ALPHA/NUMERIC INDEX

PART NUMBER	AIRLINE STOCK NUMBER	FIG NUMBER	ITEM NUMBER	TOTAL REQ'D
D2549020504600		01E	-001E	RF
D2549020504800		01E	-001C	RF
D2549020504871		01E	-080C	001
		12A	-001B	RF
D2549020505000		01D	-001M	RF
			-001N	RF
D2549020505065		01D	-040L	001
		06A	-001G	RF
D2549020505200		01F	-001N	RF
D2549020505265		01F	-040N	001
		06D	-001M	RF
D2549020505278		01F	-150L	001
		19D	-001D	RF
D2549020505400		01J	-001C	RF
D2549020505600		41L	-001F	RF
D2549020505665		06U	-001D	RF
		41L	-040E	001
D2549020505666		07J	-001M	RF
		41L	-050E	001
D2549020505672		13H	-001G	RF
		41L	-090F	001
		41S	-090K	001
		41V	090A	001
D2549020505800		01F	-001K	RF
D2549020506000		01F	-001J	RF
D2549020506065		01F	-040J	001
		06D	-001D	RF
D2549020506200		01J	-001G	RF
			-001R	RF
D2549020506264		01J	-030D	001
		01P	-030B	001
		5	-001J	RF
D2549020506265		01J	-040G	001
			-040R	001
		06F	-001B	RF

- ITEM NOT ILLUSTRATED

ALPHA/NUMERIC INDEX

PART NUMBER	AIRLINE STOCK NUMBER	FIG NUMBER	ITEM NUMBER	TOTAL REQ'D
			-001P	RF
D2549020506266		01J	-050G	001
		01P	050A	001
		01Q	-050D	001
		01T	-050J	001
		01V	-050J	001
		01W	-050F	001
		01Y	-050B	001
		07D	-001B	RF
		41B	-050H	001
		41D	-050J	001
		41G	-050G	001
		41H	-050F	001
D2549020506271		01J	-080C	001
		01K	-080G	001
		01M	-080D	001
		01P	080A	001
		01Q	-080B	001
		01T	-080C	001
		01V	-080C	001
		01W	-080E	001
		01Y	-080B	001
		12C	-001H	RF
		41B	-080E	001
		41D	-080G	001
		41G	-080E	001
		41H	-080D	001
		41K	-080D	001
D2549020506272		01J	-090G	001
		01P	090A	001
		01Q	-090D	001
		01T	-090H	001
		01V	-090F	001
		01W	-090F	001
		01Y	-090B	001

- ITEM NOT ILLUSTRATED

ALPHA/NUMERIC INDEX

PART NUMBER	AIRLINE STOCK NUMBER	FIG NUMBER	ITEM NUMBER	TOTAL REQ'D
D2549020506276		13B	-001B	RF
		41B	-090G	001
		41D	-090J	001
		41G	-090H	001
		01J	-130C	001
		01K	-130D	001
		01M	-130D	001
		01P	130A	001
		01Q	-130B	001
		01T	-130D	001
		01V	-130C	001
		01W	-130E	001
		01Y	-130B	001
		17C	-001B	RF
		41B	-130D	001
		41D	-130E	001
		41G	-130D	001
		41H	-130D	001
		41K	-130D	001
		41M	-130D	001
		41N	-130C	001
		41T	-130C	001
		41W	-130D	001
		41X	-130E	001
		42E	-130E	001
D2549020506277		42	130A	001
		01J	-140C	001
		01P	140A	001
		01Q	-140B	001
		01T	-140B	001
		01V	-140B	001
		01W	-140C	001
		01Y	-140B	001
		18	-001H	RF
		41B	-140C	001

- ITEM NOT ILLUSTRATED

ALPHA/NUMERIC INDEX

PART NUMBER	AIRLINE STOCK NUMBER	FIG NUMBER	ITEM NUMBER	TOTAL REQ'D
		41D	-140B	001
		41G	-140B	001
		41H	-140B	001
		41M	-140B	001
		41N	-140B	001
		41W	-140B	001
D2549020506278		01J	-150E	001
		01P	-150B	001
		01T	-150D	001
		01V	-150F	001
		01W	-150D	001
		19E	-001D	RF
D2549020506280		01J	-170C	001
		01K	-170C	001
		01M	-170B	001
		01P	170A	001
		21	-001F	RF
D2549020506281		01J	-180E	001
		01P	-180B	001
		01T	-180E	001
		01V	-180D	001
		01W	-180C	001
		01Y	-180B	001
		22E	-001A	RF
		41B	-180E	001
		41D	-180C	001
D2549020506282		01J	-190D	001
		01P	190A	001
		01Q	-190D	001
		01T	190E	001
		01W	-190D	001
		01Y	-190B	001
		23B	-001C	RF
		41B	-190E	001
		41G	-190D	001

- ITEM NOT ILLUSTRATED

ALPHA/NUMERIC INDEX

PART NUMBER	AIRLINE STOCK NUMBER	FIG NUMBER	ITEM NUMBER	TOTAL REQ'D
		41H	-190C	001
		41M	-190D	001
		41N	-190C	001
		41W	-190D	001
		41X	190D	001
D2549020506283		01J	-200C	001
		01P	200A	001
		01T	-200C	001
		01U	-200D	001
		01W	-200E	001
		26C	-001B	RF
D2549020506400		01P	-001B	RF
D2549020506465		01P	-040B	001
		06J	-001M	RF
D2549020506600		01Q	-001H	RF
D2549020506665		01Q	-040H	001
		06L	-001D	RF
D2549020506800		01R	-001B	RF
D2549020506865		01R	-040B	001
		06L	-001A	RF
D2549020507000		01T	-001J	RF
D2549020507065		01T	-040J	001
		01V	-040K	001
		06M	-001K	RF
D2549020507080		01Q	-170B	001
		01T	-170B	001
		01V	-170D	001
		01W	-170D	001
		01Y	-170B	001
		21A	-001B	RF
		41B	-170F	001
		41D	-170D	001
		41G	-170D	001
		41H	-170C	001
		41K	-170B	001

- ITEM NOT ILLUSTRATED

ALPHA/NUMERIC INDEX

PART NUMBER	AIRLINE STOCK NUMBER	FIG NUMBER	ITEM NUMBER	TOTAL REQ'D
		41M	-170B	001
		41N	-170C	001
D2549020507200		01V	-001M	RF
D2549020507282		01V	-190E	001
		23B	-001F	RF
		41A	-190C	001
		41G	-190F	001
		41J	-190C	001
		41K	-190D	001
		41L	-190B	001
		41M	-190B	001
		41P	-190C	001
		41S	-190C	001
		41U	-190C	001
		41V	-190B	001
		41W	190A	001
		41Y	-190E	001
		41Z	-190B	001
D2549020507400		41H	-001A	RF
D2549020507465		06T	-001C	RF
		41H	040A	001
D2549020507471		12D	-001J	RF
		41H	080A	001
D2549020507600		41H	-001L	RF
D2549020507800		41H	-001B	RF
D2549020508000		41K	-001C	RF
D2549020508200		41K	-001G	RF
D2549020508283		26K	-001B	RF
		41G	-200E	001
		41J	-200D	001
		41K	-200D	001
		41M	-200G	001
D2549020508400		41H	-001G	RF
			-001N	RF
			-001P	RF

- ITEM NOT ILLUSTRATED

ALPHA/NUMERIC INDEX

PART NUMBER	AIRLINE STOCK NUMBER	FIG NUMBER	ITEM NUMBER	TOTAL REQ'D
D2549020508472		01W	-090N	001
		01Y	-090K	001
		13V	-001E	RF
		41F	-090N	001
D2549020508600		41H	-001H	RF
D2549020508800		41H	-001M	RF
D2549020509000		41J	-001C	RF
D2549020509200		41G	-001K	RF
D2549020509600		41J	-001G	RF
D2549020509665		06T	-001K	RF
		41J	-040F	001
D2549020509666		07J	-001G	RF
		41J	-050F	001
		41L	-050B	001
D2549020509672		13E	-001A	RF
		41J	-090F	001
D2549020509679		20B	-001B	RF
		41J	-160E	001
D2549020509683		26K	-001D	RF
		41G	-200B	001
		41J	-200B	001
		41K	-200B	001
D2549020509800		41J	-001F	RF
D2549020510000		41K	-001H	RF
D2549020510065		06U	-001A	RF
		41K	-040H	001
D2549020510400		41P	-001K	RF
			-001P	RF
D2549020510465		06W	-001J	RF
		41P	-040K	001
D2549020510466		07L	-001J	RF
		41P	-050G	001
D2549020510483		26N	-001B	RF
		41P	-200C	001
		41W	200A	001

- ITEM NOT ILLUSTRATED

ALPHA/NUMERIC INDEX

PART NUMBER	AIRLINE STOCK NUMBER	FIG NUMBER	ITEM NUMBER	TOTAL REQ'D
		42A	-200B	001
		42E	-200C	001
		42	-200D	001
D2549020510600		41R	-001E	RF
D2549020510664		05G	-001A	RF
		41R	-030C	001
D2549020510665		06X	-001C	RF
		41R	-040E	001
D2549020510666		07N	-001C	RF
		41R	-050E	001
D2549020510671		12E	-001J	RF
		41R	-080C	001
		41V	-080D	001
		41Y	-080D	001
		42E	080A	001
D2549020510672		13J	-001A	RF
		41R	-090E	001
D2549020510675		16D	-001B	RF
		41R	-120C	001
		42E	120A	001
		42K	-120D	001
		42L	-120G	001
		42R	-120B	001
		42T	-120C	001
D2549020510676		17D	-001K	RF
		41R	-130C	001
		42E	130A	001
D2549020510678		19F	-001K	RF
		41R	-150C	001
		42E	150A	001
		42K	-150D	001
		42L	-150E	001
		42R	-150B	001
		42T	-150D	001
D2549020510679		20B	-001D	RF

- ITEM NOT ILLUSTRATED

ALPHA/NUMERIC INDEX

PART NUMBER	AIRLINE STOCK NUMBER	FIG NUMBER	ITEM NUMBER	TOTAL REQ'D
		41R	-160D	001
		42E	160A	001
		42K	-160C	001
		42L	-160D	001
		42R	-160B	001
		42T	-160D	001
D2549020510680		21B	-001D	RF
		41R	-170C	001
		41V	-170B	001
		41Y	-170B	001
		42E	170A	001
		42K	-170B	001
		42L	-170C	001
		42R	-170B	001
		42T	-170C	001
D2549020510800		41R	-001M	RF
D2549020510861		2	-001L	RF
		41R	-010D	001
D2549020510865		06V	-001M	RF
		41R	-040M	001
D2549020511000		41K	-001M	RF
D2549020511072		13H	-001C	RF
		41K	-090J	001
		41P	-090G	001
		41U	-090C	001
D2549020511200		41N	-001K	RF
D2549020511265		06V	-001G	RF
		41N	-040K	001
D2549020511266		07L	-001C	RF
		41N	-050J	001
D2549020511600		41R	-001J	RF
D2549020511665		06T	-001N	RF
		41R	-040J	001
D2549020511800		41P	-001B	RF
D2549020511865		06V	-001J	RF

- ITEM NOT ILLUSTRATED

ALPHA/NUMERIC INDEX

PART NUMBER	AIRLINE STOCK NUMBER	FIG NUMBER	ITEM NUMBER	TOTAL REQ'D
		41P	-040B	001
D2549020511866		07L	-001E	RF
		41P	-050B	001
		41R	-050K	001
		41U	-050D	001
D2549020512000		41N	-001F	RF
D2549020512200		41L	-001E	RF
D2549020512271		12D	-001M	RF
		41L	-080D	001
		41P	-080E	001
		41V	-080E	001
		41X	-080D	001
		41Z	-080E	001
		42A	-080C	001
		42B	-080B	001
		42C	-080D	001
		42D	-080B	001
		42F	-080B	001
		42	-080E	001
D2549020512272		13H	-001A	RF
		41L	-090D	001
		41P	-090H	001
		41X	-090D	001
D2549020512400		41N	-001H	RF
D2549020512461		02C	-001D	RF
		41F	010A	001
		41H	-010D	001
		41N	-010E	001
		41W	-010B	001
		41X	-010B	001
		42	-010B	001
D2549020512464		05C	-001L	RF
		41N	-030G	001
D2549020512465		06V	-001F	RF
		41N	-040H	001

- ITEM NOT ILLUSTRATED

ALPHA/NUMERIC INDEX

PART NUMBER	AIRLINE STOCK NUMBER	FIG NUMBER	ITEM NUMBER	TOTAL REQ'D
D2549020512466		07L	-001A	RF
		41N	-050G	001
D2549020512471		12E	-001E	RF
		41N	-080F	001
		41W	-080B	001
		41X	-080C	001
		42	-080B	001
D2549020512472		01N	-090H	001
		01Q	-090H	001
		01U	-090J	001
		01X	-090C	001
		01Y	-090F	001
		13H	-001M	RF
		41C	-090F	001
		41F	090A	001
		41H	-090J	001
		41N	-090H	001
		41S	-090E	001
		41W	-090B	001
D2549020512600		41M	-001C	RF
D2549020512672		13H	-001E	RF
		41M	-090C	001
		41N	-090K	001
		41T	-090D	001
D2549020512800		41N	-001C	RF
D2549020512883		26K	-001F	RF
		41R	200A	001
D2549020513000		41J	-001K	RF
			-001Q	RF
D2549020513071		12D	-001K	RF
		41J	-080E	001
		41U	080A	001
		41Z	-080B	001
		42C	-080B	001
D2549020513083		26M	-001A	RF

- ITEM NOT ILLUSTRATED

ALPHA/NUMERIC INDEX

PART NUMBER	AIRLINE STOCK NUMBER	FIG NUMBER	ITEM NUMBER	TOTAL REQ'D
		41J	-200C	001
		41K	-200C	001
		41L	-200B	001
		41M	-200E	001
		41N	200A	001
		41P	-200B	001
		41Q	210A	001
		41R	-200C	001
		41S	200A	001
		41T	200A	001
		41U	200A	001
		41V	200A	001
		41W	-200B	001
		41X	200A	001
		41Y	200A	001
		41Z	200A	001
		42A	200A	001
		42B	200A	001
		42C	200A	001
		42D	-200D	001
		42E	200A	001
		42	-200B	001
D2549020513200		41W	-001N	RF
D2549020513265		06U	-001H	RF
		41R	-040L	001
D2549020513266		41W	-050J	001
		49B	-001H	RF
D2549020513400		41T	-001D	RF
D2549020513600		41R	-001A	RF
D2549020513665		06W	-001K	RF
		41R	040A	001
D2549020513666		07L	-001K	RF
		41R	050A	001
D2549020513671		12E	-001H	RF
		41R	080A	001

- ITEM NOT ILLUSTRATED

ALPHA/NUMERIC INDEX

PART NUMBER	AIRLINE STOCK NUMBER	FIG NUMBER	ITEM NUMBER	TOTAL REQ'D
D2549020513800		42F	-001C	RF
D2549020513865		42F	-040C	001
		48B	-001N	RF
D2549020513866		07V	-001L	RF
		42F	-050C	001
D2549020514000		41N	-001E	RF
D2549020514200		41L	-001A	RF
D2549020514400		41J	-001L	RF
D2549020514600		41L	-001B	RF
D2549020514671		12E	-001A	RF
		41K	-080E	001
		41L	-080C	001
		41M	-080C	001
		41N	-080E	001
		41P	-080B	001
		41R	-080E	001
		41S	080A	001
		41T	080A	001
		41U	-080C	001
		41V	-080C	001
		41W	-080E	001
		41X	-080F	001
		41Y	080A	001
		41Z	-080F	001
		42A	080A	001
		42B	080A	001
		42C	080A	001
		42D	-080D	001
		42E	-080B	001
		42F	-080D	001
		42G	-080C	001
		42	-080F	001
D2549020514672		13H	-001B	RF
		41L	-090E	001
		41N	-090G	001

- ITEM NOT ILLUSTRATED

ALPHA/NUMERIC INDEX

PART NUMBER	AIRLINE STOCK NUMBER	FIG NUMBER	ITEM NUMBER	TOTAL REQ'D
		41R	-090J	001
		41S	-090A	001
		41T	090A	001
D2549020514800		41P	-001A	RF
			-001N	RF
D2549020514865		06R	-001C	RF
		41P	040A	001
D2549020514866		07L	-001D	RF
		41P	050A	001
D2549020514871		12E	-001F	RF
		41P	080A	001
		41V	-080B	001
		41Y	-080B	001
		41Z	-080C	001
		42A	-080E	001
		42F	080A	001
D2549020514883		26N	-001A	RF
		41P	200A	001
		41V	-200B	001
		41Y	-200B	001
		41Z	-200B	001
		42A	-200D	001
		42C	-200B	001
		42D	-200B	001
D2549020600000		01C	-001H	RF
D2549020600064		01A	-030E	001
			-030J	001
		01C	-030B	001
			-030F	001
		01H	-030C	001
			-030F	001
		5	-001D	RF
			-001P	RF
D2549020600065		01C	-040H	001
		06B	-001K	RF

- ITEM NOT ILLUSTRATED

ALPHA/NUMERIC INDEX

PART NUMBER	AIRLINE STOCK NUMBER	FIG NUMBER	ITEM NUMBER	TOTAL REQ'D
D2549020600066		01C	-050H	001
		07A	-001G	RF
D2549020600071		01C	-080F	001
		01D	080A	001
		12	-001K	RF
D2549020600078		01C	-150E	001
		01D	-150B	001
		01E	-150H	001
		01F	150A	001
		01H	-150F	001
		01K	-150G	001
		01M	-150E	001
		19B	-001E	RF
D2549020600082		01C	-190B	001
		23	-001D	RF
D2549020600200		01D	-001B	RF
D2549020600265		01D	-040B	001
		06A	-001D	RF
D2549020600266		01D	-050B	001
		07A	-001K	RF
D2549020600283		01C	-200B	001
		01D	-200B	001
		26	-001H	RF
D2549020600400		41	-001L	RF
D2549020600461		2	-001C	RF
		41	-010E	001
D2549020600463		41	-020C	001
		4	-001C	RF
D2549020600464		05A	-001B	RF
		41	-030D	001
D2549020600465		06C	-001E	RF
		41	-040K	001
D2549020600466		07A	-001L	RF
		41	-050J	001
D2549020600471		12A	-001A	RF

- ITEM NOT ILLUSTRATED

ALPHA/NUMERIC INDEX

PART NUMBER	AIRLINE STOCK NUMBER	FIG NUMBER	ITEM NUMBER	TOTAL REQ'D
		41	-080F	001
D2549020600472		13	-001H	RF
		41	-090J	001
D2549020600473		14	-001C	RF
		41	-100C	001
D2549020600474		15	-001G	RF
		41	-110F	001
D2549020600475		16	-001H	RF
		41	-120G	001
D2549020600476		17A	-001G	RF
		41	-130G	001
D2549020600477		01A	-140D	001
		01D	-140B	001
		01F	-140D	001
		01G	-140C	001
		01H	-140D	001
		01K	-140B	001
		18	-001K	RF
		41B	-140B	001
		41	-140C	001
D2549020600478		19A	-001C	RF
		41	-150E	001
D2549020600479		20A	-001L	RF
		41	-160D	001
D2549020600480		21	-001D	RF
		41	-170C	001
D2549020600482		01A	-190D	001
		01D	-190C	001
		01G	-190D	001
		01H	-190B	001
		23C	-001A	RF
		41	-190D	001
D2549020600483		01H	-200D	001
		01K	-200B	001
		26	-001G	RF

- ITEM NOT ILLUSTRATED

ALPHA/NUMERIC INDEX

PART NUMBER	AIRLINE STOCK NUMBER	FIG NUMBER	ITEM NUMBER	TOTAL REQ'D
		41B	-200B	001
		41	-200E	001
D2549020600800		01E	-001J	RF
D2549020600865		01E	-040J	001
		06C	-001H	RF
D2549020600866		01E	-050J	001
		7	-001L	RF
D2549020601000		01F	-001F	RF
D2549020601065		01F	-040F	001
		06D	-001A	RF
D2549020601066		01F	-050F	001
		07Y	-001D	RF
D2549020601078		01F	-150F	001
		01G	-150D	001
		19B	-001J	RF
		41B	-150B	001
D2549020601200		01E	-001K	RF
		01L	-001N	RF
D2549020601261		01E	-010C	001
		01L	-010E	001
		02C	-001J	RF
D2549020601264		01E	-030C	001
		01L	-030E	001
		05A	-001K	RF
D2549020601265		01E	-040K	001
		01L	-040L	001
		06A	-001J	RF
		48E	-001N	RF
D2549020601266		01E	-050K	001
		07B	-001C	RF
D2549020601271		01E	-080G	001
		01L	-080G	001
		12A	-001E	RF
D2549020601272		01E	-090G	001
		13	-001J	RF

- ITEM NOT ILLUSTRATED

ALPHA/NUMERIC INDEX

PART NUMBER	AIRLINE STOCK NUMBER	FIG NUMBER	ITEM NUMBER	TOTAL REQ'D
D2549020601275		01E	-120F	001
		01L	-120G	001
		16	-001J	RF
D2549020601276		01E	-130G	001
		01L	-130G	001
		17A	-001H	RF
D2549020601400		01E	-001L	RF
			-001P	RF
		01H	-001N	RF
D2549020601465		01H	-040K	001
		06A	-001K	RF
D2549020601471		01E	-080H	001
		01F	080A	001
		01G	-080E	001
		01H	-080C	001
		01K	-080H	001
		01M	-080F	001
		12A	-001F	RF
D2549020601472		01E	-090H	001
		01F	090A	001
		01G	-090E	001
		01H	-090D	001
		01K	-090G	001
		13	-001K	RF
D2549020601475		01E	-120G	001
		01F	120A	001
		01H	-120G	001
		01K	-120F	001
		01M	-120E	001
		16	-001K	RF
D2549020601476		01E	-130H	001
		01H	-130G	001
		17A	-001J	RF
D2549020601600		01F	-001A	RF
			-001P	RF

- ITEM NOT ILLUSTRATED

ALPHA/NUMERIC INDEX

PART NUMBER	AIRLINE STOCK NUMBER	FIG NUMBER	ITEM NUMBER	TOTAL REQ'D
		01K	-001K	RF
		01M	-001N	RF
D2549020601665		01K	-040K	001
		06A	-001L	RF
D2549020601676		01F	130A	001
		01H	-130C	001
		01K	-130G	001
		01M	-130E	001
		17A	-001N	RF
D2549020601800		01G	-001H	RF
D2549020601865		01G	-040H	001
		06E	-001B	RF
D2549020601866		01G	-050H	001
		07B	-001G	RF
D2549020602000		01F	-001G	RF
		01N	-001M	RF
D2549020602065		01F	-040G	001
		01N	-040M	001
		06D	-001C	RF
D2549020602066		01F	-050G	001
		01N	-050H	001
		7	-001M	RF
D2549020602076		01F	-130F	001
		01N	-130F	001
		17A	-001K	RF
D2549020602078		01F	-150G	001
		01N	-150G	001
		19D	-001C	RF
D2549020602200		01W	-001C	RF
D2549020602400		01F	-001L	RF
D2549020602465		01F	-040L	001
		06D	-001E	RF
D2549020602472		01F	-090G	001
		13A	-001E	RF
D2549020602600		01G	-001B	RF

- ITEM NOT ILLUSTRATED

ALPHA/NUMERIC INDEX

PART NUMBER	AIRLINE STOCK NUMBER	FIG NUMBER	ITEM NUMBER	TOTAL REQ'D
D2549020602661		01G	-010B	001
		01H	010A	001
		01J	-010E	001
			010A	001
		01K	-010B	001
		01L	010A	001
		01M	-010E	001
			010A	001
		01N	010A	001
		01P	-010B	001
		01Q	-010C	001
		01R	010A	001
		01S	-010B	001
		01T	010A	001
		01U	010A	001
		01W	-010C	001
		2	-001D	RF
			-001N	RF
		41B	-010B	001
D2549020602663		01G	-020B	001
		01H	020A	001
		01J	020A	001
		01K	-020B	001
		01L	020A	001
		01M	020A	001
		01N	020A	001
		01P	-020B	001
		01Q	-020C	001
		01R	020A	001
		01S	-020B	001
		01T	020A	001
		01U	020A	001
		01V	020A	001
		01W	020A	001
		01X	020A	001

- ITEM NOT ILLUSTRATED

ALPHA/NUMERIC INDEX

PART NUMBER	AIRLINE STOCK NUMBER	FIG NUMBER	ITEM NUMBER	TOTAL REQ'D
		01Y	020A	001
		01Z	020A	001
		41A	020A	001
		41B	-020B	001
		41C	020A	001
		41D	020A	001
		41E	020A	001
		41F	-020C	001
		41G	-020C	001
		41H	020A	001
		41J	020A	001
		41K	020A	001
		41L	020A	001
		41M	020A	001
		41N	-020B	001
		41P	020A	001
		41Q	020A	001
		41R	-020B	001
		41S	020A	001
		41T	020A	001
		41U	020A	001
		41V	020A	001
		41W	020A	001
		41X	020A	001
		41Y	020A	001
		41	020A	001
		42	020A	001
		4	-001D	RF
D2549020602664		01G	-030B	001
		01H	030A	001
		01J	030A	001
		5	-001E	RF
D2549020602665		01G	-040B	001
		06D	-001H	RF
D2549020602666		01G	-050B	001

- ITEM NOT ILLUSTRATED

ALPHA/NUMERIC INDEX

PART NUMBER	AIRLINE STOCK NUMBER	FIG NUMBER	ITEM NUMBER	TOTAL REQ'D
		01H	-050J	001
		07C	-001E	RF
D2549020602671		01G	-080B	001
		01H	-080D	001
		12B	-001A	RF
D2549020602673		01G	-100B	001
		01H	100A	001
		01J	100A	001
		01K	-100B	001
		01L	100A	001
		01M	100A	001
		01N	100A	001
		01P	-100B	001
		01R	100A	001
		01T	-100C	001
		14	-001D	RF
		41B	-100B	001
		41	-100D	001
D2549020602675		01G	-120B	001
		01H	-120F	001
		16A	-001A	RF
D2549020602676		01G	-130B	001
		01H	-130F	001
		17B	-001E	RF
D2549020602677		01G	-140B	001
		01H	-140E	001
			140A	001
		01J	-140B	001
		01L	-140B	001
			-140D	001
		18	-001E	RF
			-001S	RF
D2549020602800		01G	-001C	RF
D2549020602861		01G	-010C	001
		01J	-010B	001

- ITEM NOT ILLUSTRATED

ALPHA/NUMERIC INDEX

PART NUMBER	AIRLINE STOCK NUMBER	FIG NUMBER	ITEM NUMBER	TOTAL REQ'D
			-010D	001
		01K	-010C	001
		01M	-010B	001
		01P	010A	001
		01Q	-010B	001
		01T	-010B	001
		01W	-010D	001
		2	-001E	RF
			-001Q	RF
D2549020602863		01G	-020C	001
		01J	-020B	001
		01K	-020C	001
		01M	-020B	001
		01P	020A	001
		01Q	-020B	001
		01T	-020B	001
		01V	-020D	001
		01W	-020D	001
		01Y	-020B	001
		41B	-020D	001
		41D	-020D	001
		41G	-020D	001
		41H	-020C	001
		41K	-020B	001
		41M	-020B	001
		41N	-020C	001
		41T	-020B	001
		41W	-020D	001
		4	-001E	RF
D2549020602864		01G	-030C	001
		01K	-030D	001
		5	-001F	RF
D2549020602866		01G	-050C	001
		07C	-001F	RF
D2549020602872		01G	-090C	001

- ITEM NOT ILLUSTRATED

ALPHA/NUMERIC INDEX

PART NUMBER	AIRLINE STOCK NUMBER	FIG NUMBER	ITEM NUMBER	TOTAL REQ'D
		13A	-001G	RF
D2549020602873		01G	-100C	001
		01J	-100B	001
		01K	-100C	001
		01M	-100B	001
		01P	100A	001
		14	-001E	RF
D2549020602874		01G	-110C	001
		15	-001F	RF
D2549020602875		01G	-120C	001
		16	-001M	RF
D2549020602876		01G	-130C	001
		17B	-001F	RF
D2549020602878		01G	-150C	001
		19A	-001A	RF
D2549020602882		01G	-190C	001
		23	-001F	RF
D2549020602883		01B	-200G	001
		01D	-200D	001
		01G	-200D	001
		26B	-001D	RF
D2549020603000		01G	-001D	RF
D2549020603065		01G	-040D	001
		06C	-001L	RF
D2549020603075		01G	-120D	001
		01H	-120H	001
			120A	001
		01L	-120F	001
			-120H	001
		16A	-001B	RF
			-001F	RF
		41B	-120B	001
D2549020603076		01G	-130D	001
		01H	-130H	001
			-130J	001

- ITEM NOT ILLUSTRATED

ALPHA/NUMERIC INDEX

PART NUMBER	AIRLINE STOCK NUMBER	FIG NUMBER	ITEM NUMBER	TOTAL REQ'D
			130A	001
		01L	-130F	001
			-130H	001
			-130J	001
		17A	-001L	RF
			-001Q	RF
			-001R	RF
D2549020603200		01H	-001A	RF
		01L	-001M	RF
D2549020603265		01H	-040M	001
		01L	-040K	001
		48E	-001G	RF
D2549020603266		01H	-050M	001
			050A	001
		01L	-050H	001
			-050M	001
		07Y	-001L	RF
			-001Q	RF
		49C	-001D	RF
			-001K	RF
D2549020603272		01C	-090E	001
		01D	-090G	001
		01G	-090J	001
		01H	090A	001
		01K	-090K	001
		01L	-090H	001
		01N	090A	001
		01Q	-090L	001
		13U	-001A	RF
		41D	-090L	001
		41T	-090E	001
D2549020603400		01G	-001E	RF
D2549020603465		01G	-040E	001
		06D	-001K	RF
D2549020603466		01G	-050E	001

- ITEM NOT ILLUSTRATED

ALPHA/NUMERIC INDEX

PART NUMBER	AIRLINE STOCK NUMBER	FIG NUMBER	ITEM NUMBER	TOTAL REQ'D
		07B	-001D	RF
D2549020603475		01G	-120E	001
		01H	-120C	001
		16A	-001C	RF
D2549020603476		01G	-130E	001
		17B	-001G	RF
D2549020603600		01H	-001B	RF
			-001Q	RF
D2549020603665		01H	-040B	001
		06E	-001D	RF
D2549020603666		01H	-050B	001
		07C	-001H	RF
D2549020603674		01H	-110B	001
		15B	-001A	RF
D2549020603677		01H	-140B	001
		18	-001F	RF
D2549020603678		01H	-150B	001
		19	-001C	RF
D2549020603681		01H	-180B	001
		22B	-001A	RF
D2549020603683		01H	-200B	001
		26	-001M	RF
D2549020603800		01G	-001N	RF
D2549020603865		01G	-040M	001
		06E	-001G	RF
D2549020603866		01G	-050L	001
		07B	-001H	RF
D2549020603871		01G	-080G	001
		12B	-001B	RF
D2549020603875		01G	-120J	001
		16A	-001E	RF
D2549020603876		01G	-130J	001
		17B	-001H	RF
D2549020604000		01H	-001M	RF
			-001R	RF

- ITEM NOT ILLUSTRATED

ALPHA/NUMERIC INDEX

PART NUMBER	AIRLINE STOCK NUMBER	FIG NUMBER	ITEM NUMBER	TOTAL REQ'D
D2549020604065		01H	-040L	001
		06B	-001H	RF
D2549020604200		01K	-001E	RF
D2549020604265		01K	-040E	001
		06F	-001L	RF
D2549020604266		01K	-050E	001
		01L	-050G	001
		01N	-050F	001
		01Q	-050K	001
		01U	-050C	001
		01X	-050B	001
		01Z	-050B	001
		07D	-001G	RF
		41D	-050C	001
D2549020604271		01J	080A	001
		01K	-080C	001
		01L	-080D	001
		01M	080A	001
		01N	-080B	001
		01P	-080D	001
		01Q	-080D	001
		01S	-080B	001
		01T	080A	001
		01U	080A	001
		01V	080A	001
		01W	080A	001
		01X	-080E	001
		01Y	080A	001
		01Z	-080C	001
		12C	-001B	RF
		41A	080A	001
		41B	080A	001
		41C	-080B	001
		41D	-080F	001
		41F	-080B	001

- ITEM NOT ILLUSTRATED

ALPHA/NUMERIC INDEX

PART NUMBER	AIRLINE STOCK NUMBER	FIG NUMBER	ITEM NUMBER	TOTAL REQ'D
		41G	-080C	001
		41H	-080B	001
		41J	080A	001
		41K	-080C	001
		41L	-080B	001
		41	-080B	001
D2549020604400		01K	-001J	RF
D2549020604465		01K	-040H	001
		06G	-001B	RF
D2549020604466		01K	-050H	001
		07D	-001J	RF
D2549020604474		01K	-110E	001
		01M	-110F	001
		15C	-001F	RF
D2549020604600		01R	-001A	RF
D2549020604664		01R	030A	001
		05B	-001J	RF
D2549020604665		01R	040A	001
		06K	-001K	RF
D2549020604666		01R	050A	001
		07F	-001B	RF
D2549020604671		01R	080A	001
		12D	-001C	RF
D2549020604675		01R	120A	001
		16C	-001E	RF
D2549020604676		01R	130A	001
		17D	-001C	RF
D2549020604800		01M	-001D	RF
D2549020604872		01J	-090B	001
		01K	-090E	001
		01L	-090B	001
		01M	-090C	001
		01N	-090E	001
		01P	-090D	001
		01S	-090G	001

- ITEM NOT ILLUSTRATED

ALPHA/NUMERIC INDEX

PART NUMBER	AIRLINE STOCK NUMBER	FIG NUMBER	ITEM NUMBER	TOTAL REQ'D
		01T	-090B	001
		01V	-090J	001
		01W	-090C	001
		01X	-090L	001
		01Y	-090D	001
		01Z	090A	001
		13C	-001C	RF
		41B	-090J	001
		41C	-090J	001
		41D	-090D	001
		41F	-090E	001
		41G	-090K	001
		41J	-090J	001
		41K	090A	001
		41L	090A	001
		41	090A	001
D2549020605000		01M	-001A	RF
D2549020605065		01M	040A	001
		06H	-001E	RF
D2549020605066		01M	050A	001
		01U	050A	001
		07E	-001C	RF
D2549020605200		01K	-001C	RF
D2549020605265		01K	-040C	001
		06F	-001J	RF
D2549020605272		01K	-090C	001
		01N	-090B	001
		13B	-001F	RF
D2549020605400		01P	-001C	RF
D2549020605465		01P	-040C	001
		06K	-001A	RF
D2549020605466		01P	-050B	001
		01Y	-050L	001
		07E	-001L	RF
D2549020605471		01P	-080B	001

- ITEM NOT ILLUSTRATED

ALPHA/NUMERIC INDEX

PART NUMBER	AIRLINE STOCK NUMBER	FIG NUMBER	ITEM NUMBER	TOTAL REQ'D
		01Y	-080G	001
		12D	-001B	RF
		41J	-080D	001
D2549020605475		01P	-120C	001
		01Y	-120G	001
		16C	-001D	RF
		41J	-120D	001
		41U	120A	001
		41Z	-120C	001
		42C	-120B	001
		42G	-120F	001
		42H	-120E	001
		42L	-120H	001
		42M	120A	001
		42N	-120C	001
		42R	-120D	001
		42S	-120B	001
		42T	120A	001
D2549020605476		01P	-130B	001
		01Y	-130G	001
		17D	-001B	RF
		41J	-130D	001
		41U	130A	001
		41Z	-130B	001
		42C	-130B	001
		42G	-130G	001
		42H	-130E	001
		42L	-130G	001
		42M	-130D	001
		42N	-130C	001
		42R	-130D	001
		42S	-130B	001
		42T	130A	001
D2549020605600		01K	-001G	RF
D2549020605666		01K	-050D	001

- ITEM NOT ILLUSTRATED

ALPHA/NUMERIC INDEX

PART NUMBER	AIRLINE STOCK NUMBER	FIG NUMBER	ITEM NUMBER	TOTAL REQ'D
D2549020605672		01M	-050G	001
		01Q	-050B	001
		01T	-050D	001
		01V	-050G	001
		07D	-001K	RF
		41B	-050J	001
		41D	-050H	001
		41G	-050H	001
		41K	-050G	001
		41N	-050C	001
		01K	-090F	001
		01M	-090G	001
		01Q	-090B	001
		01T	-090D	001
		01V	-090G	001
		13B	-001H	RF
		41B	-090H	001
		41D	-090H	001
		41G	-090J	001
		41K	-090G	001
		41N	-090C	001
D2549020605678		01K	-150D	001
		01M	-150D	001
		01Q	-150B	001
		01T	-150C	001
		01V	-150E	001
		19E	-001L	RF
		41B	-150G	001
		41D	-150E	001
		41G	-150G	001
		41K	-150B	001
		41M	-150D	001
		41N	-150C	001
		41T	-150B	001
		41W	-150D	001

- ITEM NOT ILLUSTRATED

ALPHA/NUMERIC INDEX

PART NUMBER	AIRLINE STOCK NUMBER	FIG NUMBER	ITEM NUMBER	TOTAL REQ'D
		41X	-150C	001
		42E	-150D	001
		42	150A	001
D2549020605682		01K	-190B	001
		01M	-190B	001
		01Q	-190B	001
		01T	-190C	001
		01V	-190D	001
		01W	-190B	001
		01Z	-190D	001
		23B	-001H	RF
		41G	-190E	001
		41M	-190E	001
		41N	190A	001
		41Q	200A	001
		41T	-190B	001
		41W	-190C	001
		41X	-190C	001
D2549020605683		01K	-200D	001
		01M	-200C	001
		01Q	-200D	001
		01T	-200D	001
		26C	-001N	RF
D2549020605800		01L	-001F	RF
			-001P	RF
D2549020605865		01L	-040F	001
		06G	-001K	RF
D2549020605866		01L	-050D	001
		07E	-001B	RF
D2549020605874		01L	-110C	001
		15C	-001J	RF
		41F	-110C	001
		41H	-110B	001
D2549020605878		01L	-150C	001
		19F	-001C	RF

- ITEM NOT ILLUSTRATED

ALPHA/NUMERIC INDEX

PART NUMBER	AIRLINE STOCK NUMBER	FIG NUMBER	ITEM NUMBER	TOTAL REQ'D
		41F	-150D	001
		41H	-150B	001
D2549020606000		01L	-001H	RF
D2549020606065		01L	-040H	001
		06H	-001A	RF
D2549020606072		01N	-090D	001
		01P	-090H	001
		01W	-090L	001
		01X	090A	001
		01Y	-090C	001
		13C	-001A	RF
		41C	090A	001
		41F	-090K	001
D2549020606400		01H	-001H	RF
D2549020606465		01H	-040H	001
		06T	-001J	RF
D2549020606600		01H	-001L	RF
D2549020606665		01H	040A	001
		06E	-001C	RF
D2549020606666		01H	-050H	001
		07B	-001J	RF
D2549020606683		01H	-200C	001
		26	-001N	RF
D2549020606800		01M	-001E	RF
			-001P	RF
D2549020606865		01M	-040E	001
			-040M	001
		06G	-001N	RF
			-001P	RF
D2549020607000		01J	-001E	RF
			-001P	RF
D2549020607065		01J	-040E	001
			-040P	001
		06E	-001L	RF
D2549020607066		01J	-050E	001

- ITEM NOT ILLUSTRATED

ALPHA/NUMERIC INDEX

PART NUMBER	AIRLINE STOCK NUMBER	FIG NUMBER	ITEM NUMBER	TOTAL REQ'D
		01K	-050C	001
		01M	-050C	001
		01N	-050B	001
		01P	-050J	001
		01Q	-050E	001
		01T	-050K	001
		01V	-050D	001
		01W	050A	001
		01X	-050E	001
		01Y	-050J	001
		01Z	050A	001
		07Y	-001F	RF
		41C	-050B	001
		41D	-050D	001
		41F	-050C	001
		41J	-050J	001
		41	050A	001
D2549020607072		01J	-090E	001
		01R	090A	001
		13A	-001B	RF
D2549020607075		01J	-120C	001
		01K	-120C	001
		01L	-120D	001
		01M	-120D	001
		01N	-120B	001
		01P	-120E	001
		01Q	-120D	001
		01S	-120B	001
		01T	-120B	001
		01U	120A	001
		01V	-120B	001
		01W	120A	001
		01X	-120E	001
		01Y	120A	001
		01Z	-120C	001

- ITEM NOT ILLUSTRATED

ALPHA/NUMERIC INDEX

PART NUMBER	AIRLINE STOCK NUMBER	FIG NUMBER	ITEM NUMBER	TOTAL REQ'D
		16B	-001B	RF
		41A	120A	001
		41B	120A	001
		41C	-120B	001
		41D	120A	001
		41F	-120B	001
		41G	-120C	001
		41H	-120B	001
		41J	120A	001
		41K	-120D	001
		41L	-120B	001
		41M	-120C	001
		41N	-120D	001
		41P	120A	001
		41R	-120B	001
		41S	-120B	001
		41T	-120B	001
		41U	-120B	001
		41V	120A	001
		41W	120A	001
		41X	-120B	001
		41Y	-120B	001
		41Z	120A	001
		41	-120C	001
		42A	-120B	001
		42B	-120D	001
		42C	-120C	001
		42D	120A	001
		42E	-120C	001
		42F	-120C	001
		42G	-120E	001
		42J	-120D	001
		42K	120A	001
		42L	-120B	001
		42M	-120C	001

- ITEM NOT ILLUSTRATED

ALPHA/NUMERIC INDEX

PART NUMBER	AIRLINE STOCK NUMBER	FIG NUMBER	ITEM NUMBER	TOTAL REQ'D
		42N	-120D	001
		42P	-120B	001
		42Q	120A	001
		42R	120A	001
		42S	-120F	001
		42T	-120E	001
		42U	-120G	001
		42	-120C	001
D2549020607200		01H	-001K	RF
D2549020607265		01H	-040J	001
		06F	-001D	RF
D2549020607400		01M	-001C	RF
D2549020607465		01M	-040C	001
		06H	-001G	RF
D2549020607472		01M	-090B	001
		01U	-090B	001
		13C	-001B	RF
D2549020607600		01L	-001C	RF
D2549020607665		01M	-040D	001
		06G	-001G	RF
D2549020607666		01L	-050B	001
		01S	-050J	001
		01W	-050C	001
		01X	-050H	001
		01Y	-050C	001
		07D	-001N	RF
		41A	-050C	001
		41C	050A	001
		41G	-050C	001
		41J	-050D	001
		41K	-050F	001
D2549020607671		01L	-080B	001
		01M	-080C	001
		01P	-080E	001
		01T	-080B	001

- ITEM NOT ILLUSTRATED

ALPHA/NUMERIC INDEX

PART NUMBER	AIRLINE STOCK NUMBER	FIG NUMBER	ITEM NUMBER	TOTAL REQ'D
D2549020607675		01W	-080C	001
		01X	-080F	001
		01Z	080A	001
		12C	-001F	RF
		41A	-080C	001
		41C	-080E	001
		41D	-080B	001
		41F	-080C	001
		41J	-080C	001
		41K	080A	001
		41L	080A	001
		41M	080A	001
		41	080A	001
		01L	-120B	001
		01M	-120C	001
		01P	-120B	001
		01T	-120C	001
		01W	-120C	001
		01X	-120F	001
		01Z	120A	001
		16C	-001A	RF
		41A	-120C	001
		41C	-120E	001
		41D	-120B	001
		41F	-120C	001
		41J	-120C	001
		41K	120A	001
		41L	120A	001
		41M	120A	001
		41N	-120E	001
		41P	-120B	001
		41R	-120E	001
		41S	120A	001
		41T	120A	001
		41U	-120C	001

- ITEM NOT ILLUSTRATED

ALPHA/NUMERIC INDEX

PART NUMBER	AIRLINE STOCK NUMBER	FIG NUMBER	ITEM NUMBER	TOTAL REQ'D
		41V	-120B	001
		41W	-120E	001
		41X	-120F	001
		41Y	120A	001
		41Z	-120F	001
		41	120A	001
		42A	120A	001
		42B	120A	001
		42C	120A	001
		42D	-120D	001
		42E	-120B	001
		42F	-120D	001
		42G	-120B	001
		42H	-120B	001
		42J	120A	001
		42L	-120F	001
		42M	-120B	001
		42P	-120C	001
		42Q	-120D	001
		42T	-120D	001
		42	-120E	001
D2549020607676		01L	-130B	001
		01M	-130C	001
		01P	-130F	001
		01T	-130C	001
		01W	-130C	001
		01X	-130E	001
		01Z	130A	001
		17C	-001J	RF
		41A	-130C	001
		41C	-130E	001
		41D	-130B	001
		41F	-130C	001
		41J	-130C	001
		41K	130A	001

- ITEM NOT ILLUSTRATED

ALPHA/NUMERIC INDEX

PART NUMBER	AIRLINE STOCK NUMBER	FIG NUMBER	ITEM NUMBER	TOTAL REQ'D
		41L	130A	001
		41M	130A	001
		41N	-130E	001
		41P	-130B	001
		41R	-130E	001
		41S	130A	001
		41T	130A	001
		41U	-130C	001
		41V	-130B	001
		41W	-130F	001
		41X	-130F	001
		41Y	130A	001
		41Z	-130E	001
		41	130A	001
		42A	130A	001
		42B	130A	001
		42C	130A	001
		42D	-130C	001
		42E	-130B	001
		42F	-130C	001
		42G	-130C	001
		42H	-130B	001
		42J	130A	001
		42L	-130E	001
		42M	-130B	001
		42P	-130C	001
		42Q	-130C	001
		42T	-130D	001
		42	-130F	001
D2549020607800		01N	-001B	RF
D2549020607865		01N	-040B	001
		06J	-001A	RF
D2549020608200		01M	-001M	RF
D2549020608264		01M	-030D	001
		05C	-001E	RF

- ITEM NOT ILLUSTRATED

ALPHA/NUMERIC INDEX

PART NUMBER	AIRLINE STOCK NUMBER	FIG NUMBER	ITEM NUMBER	TOTAL REQ'D
D2549020608265		01G	-040C	001
		01K	-040G	001
		01M	-040K	001
		06H	-001L	RF
D2549020608400		01M	-001B	RF
D2549020608465		01M	-040B	001
		06H	-001F	RF
D2549020608600		01M	-001K	RF
D2549020608665		01M	-040H	001
		06G	-001F	RF
D2549020608666		01M	-050E	001
		07E	-001E	RF
D2549020608671		01K	-080D	001
		01M	-080E	001
		01Q	-080H	001
		12C	-001L	RF
		41D	080A	001
D2549020608672		01K	-090D	001
		01M	-090E	001
		01Q	-090G	001
		13B	-001G	RF
		41D	090A	001
		41H	090A	001
D2549020608800		01L	-001J	RF
D2549020608865		01L	-040B	001
			-040N	001
		48E	-001H	RF
			-001P	RF
D2549020609000		01L	-001D	RF
D2549020609065		01L	-040D	001
		06G	-001H	RF
D2549020609200		41B	-001D	RF
D2549020609400		01L	-001G	RF
D2549020609600		01M	-001F	RF
D2549020609800		01N	-001G	RF

- ITEM NOT ILLUSTRATED

ALPHA/NUMERIC INDEX

PART NUMBER	AIRLINE STOCK NUMBER	FIG NUMBER	ITEM NUMBER	TOTAL REQ'D
D2549020609865		01N	-040G	001
		06J	-001F	RF
D2549020609872		01N	-090G	001
		13C	-001G	RF
D2549020610000		01M	-001L	RF
			-001Q	RF
D2549020610061		01B	-010C	001
		01C	-010C	001
		01F	-010C	001
		01H	-010D	001
		01J	-010C	001
		01K	-010E	001
		01L	-010C	001
		01M	-010C	001
		01P	-010D	001
			-010E	001
		01Q	-010F	001
		01S	-010E	001
		01T	-010D	001
		01U	-010F	001
		01V	-010E	001
		01W	-010G	001
		02D	-001D	RF
			-001N	RF
		1	-010C	001
		41T	-010C	001
		41	-010F	001
D2549020610065		01M	-040J	001
		06H	-001K	RF
D2549020610069		01M	-060B	001
		01Y	-060B	001
		10	-001D	RF
D2549020610200		01N	-001J	RF
D2549020610261		01N	-010B	001
		01S	010A	001

- ITEM NOT ILLUSTRATED

ALPHA/NUMERIC INDEX

PART NUMBER	AIRLINE STOCK NUMBER	FIG NUMBER	ITEM NUMBER	TOTAL REQ'D
		2	-001H	RF
D2549020610263		01N	-020B	001
		01S	020A	001
		01W	-020C	001
		01Y	-020C	001
		41G	-020E	001
		41P	-020B	001
		41Z	-020B	001
		41	-020B	001
		4	-001H	RF
D2549020610264		01N	-030E	001
		05B	-001D	RF
D2549020610265		01N	-040H	001
		06J	-001G	RF
D2549020610266		01N	-050G	001
		01S	050A	001
		01W	-050E	001
		01Y	-050E	001
		07E	-001H	RF
		41G	-050K	001
		41	-050F	001
D2549020610271		01N	-080C	001
		01S	080A	001
		01W	080D	001
		01Y	-080D	001
		12C	-001M	RF
		41G	-080F	001
		41	-080E	001
D2549020610272		01N	-090J	001
		01S	090A	001
		13C	-001J	RF
D2549020610273		01N	-100B	001
		01Y	-100C	001
		14	-001J	RF
D2549020610275		01N	-120D	001

- ITEM NOT ILLUSTRATED

ALPHA/NUMERIC INDEX

PART NUMBER	AIRLINE STOCK NUMBER	FIG NUMBER	ITEM NUMBER	TOTAL REQ'D
		01S	120A	001
		01W	-120D	001
		01Y	-120D	001
		16B	-001D	RF
		41G	-120E	001
		41P	-120D	001
		41	-120F	001
		42G	-120D	001
		42H	120A	001
D2549020610276		01N	-130E	001
		01S	130A	001
		01W	-130D	001
		01Y	-130E	001
		17C	-001M	RF
		41G	-130F	001
		41P	-130D	001
		41	-130E	001
		42G	-130E	001
		42H	130A	001
D2549020610278		01N	-150E	001
		01S	150A	001
		01W	-150C	001
		01Y	-150D	001
		19F	-001E	RF
		41	-150C	001
D2549020610280		01N	-170B	001
		21	-001K	RF
D2549020610400		01P	-001G	RF
D2549020610472		01P	-090E	001
		01S	-090B	001
		01T	-090J	001
		13C	-001M	RF
D2549020610600		01N	-001H	RF
D2549020610665		01N	-040F	001
		06P	-001M	RF

- ITEM NOT ILLUSTRATED

ALPHA/NUMERIC INDEX

PART NUMBER	AIRLINE STOCK NUMBER	FIG NUMBER	ITEM NUMBER	TOTAL REQ'D
D2549020610672		01J	-090D	001
		01N	-090C	001
		01P	-090G	001
		01S	-090E	001
		01T	-090K	001
		01V	090A	001
		01X	-090K	001
		13C	-001H	RF
		41A	090A	001
		41D	-090B	001
		41K	-090C	001
		41S	-090B	001
		41	-090H	001
D2549020610800		01P	-001D	RF
			-001P	RF
D2549020610865		01P	-040D	001
			-040N	001
		06K	-001B	RF
			-001P	RF
D2549020610866		01P	-050C	001
		07E	-001M	RF
D2549020611000		01N	-001E	RF
D2549020611065		01N	-040E	001
		01P	-040F	001
		06J	-001D	RF
D2549020611200		01L	-001K	RF
D2549020611265		01L	-040C	001
		06H	-001C	RF
D2549020611400		01P	-001H	RF
D2549020611465		01P	-040H	001
		06J	-001N	RF
D2549020611600		41	-001M	RF
D2549020611664		01C	-030E	001
		01F	-030G	001
		01H	-030E	001

- ITEM NOT ILLUSTRATED

ALPHA/NUMERIC INDEX

PART NUMBER	AIRLINE STOCK NUMBER	FIG NUMBER	ITEM NUMBER	TOTAL REQ'D
		01L	-030D	001
		01N	-030D	001
		01Q	-030J	001
		01S	-030C	001
		01T	-030E	001
		05A	-001L	RF
		41D	-030F	001
		41	-030E	001
D2549020611665		06J	-001E	RF
		41	-040L	001
D2549020611666		01S	-050F	001
		07E	-001G	RF
		41	-050K	001
D2549020611672		13C	-001F	RF
		41A	-090E	001
		41C	-090B	001
		41P	-090K	001
		41	-090F	001
D2549020611674		15C	-001C	RF
		41	-110G	001
D2549020611676		01S	-130D	001
		17C	-001L	RF
		41	-130H	001
D2549020611800		01P	-001K	RF
D2549020611865		01P	-040K	001
		06H	-001B	RF
D2549020612000		01S	-001M	RF
D2549020612200		01S	-001A	RF
D2549020612264		01S	030A	001
		01W	-030E	001
		01Y	-030C	001
		05C	-001A	RF
		41G	-030G	001
		41	-030C	001
D2549020612265		01S	040A	001

- ITEM NOT ILLUSTRATED

ALPHA/NUMERIC INDEX

PART NUMBER	AIRLINE STOCK NUMBER	FIG NUMBER	ITEM NUMBER	TOTAL REQ'D
		01W	-040F	001
		01Y	-040E	001
		06L	-001J	RF
		41G	-040L	001
		41	-040G	001
D2549020612273		01S	100A	001
		01W	-100C	001
		14A	-001C	RF
		41G	-100E	001
		41P	-100B	001
		41Z	-100B	001
		41	-100B	001
		42F	-100B	001
		42G	-100D	001
		42H	100A	001
		42R	-100B	001
		42T	-100B	001
D2549020612279		01S	160A	001
		01W	-160E	001
		01Y	-160C	001
		20A	-001H	RF
		41G	-160F	001
		41	-160C	001
D2549020612280		01S	170A	001
		01W	-170C	001
		01Y	-170C	001
		21A	-001F	RF
D2549020612400		01T	-001B	RF
D2549020612600		01S	-001E	RF
D2549020612665		01S	-040D	001
		06L	-001M	RF
D2549020612674		01S	-110C	001
		01U	-110F	001
		01W	-110C	001
		15F	-001J	RF

- ITEM NOT ILLUSTRATED

ALPHA/NUMERIC INDEX

PART NUMBER	AIRLINE STOCK NUMBER	FIG NUMBER	ITEM NUMBER	TOTAL REQ'D
D2549020612800		01U	-001C	RF
D2549020612865		01U	-040C	001
		06N	-001C	RF
D2549020613000		01S	-001G	RF
D2549020613065		01S	-040G	001
		06M	-001B	RF
D2549020613074		01S	-110D	001
		15F	-001K	RF
D2549020613200		01T	-001K	RF
D2549020613265		01T	-040K	001
		01W	-040C	001
		06M	-001L	RF
		41L	040A	001
D2549020613600		01Q	-001B	RF
D2549020613664		01Q	-030B	001
		01T	-030C	001
		01V	-030E	001
		01W	-030F	001
		05B	-001H	RF
		41B	-030F	001
		41D	-030D	001
		41G	-030F	001
		41K	-030D	001
		41M	-030F	001
		41N	-030C	001
D2549020613665		01Q	-040B	001
		01T	-040D	001
		06K	-001H	RF
		41B	-040J	001
		41D	-040H	001
		41G	-040J	001
		41K	-040G	001
		41M	-040H	001
		41N	-040C	001
D2549020613673		01Q	-100B	001

- ITEM NOT ILLUSTRATED

ALPHA/NUMERIC INDEX

PART NUMBER	AIRLINE STOCK NUMBER	FIG NUMBER	ITEM NUMBER	TOTAL REQ'D
		01T	-100B	001
		01V	-100D	001
		01W	-100D	001
		01Y	-100B	001
		14	-001N	RF
		41B	-100E	001
		41D	-100D	001
		41G	-100D	001
		41H	-100C	001
		41K	-100B	001
		41M	-100B	001
		41N	-100C	001
		41T	-100B	001
		41W	-100D	001
		41X	-100C	001
		42E	-100C	001
		42	100A	001
D2549020613674		01K	-110C	001
		01M	-110E	001
		01Q	-110B	001
		01T	-110C	001
		01V	-110F	001
		15F	-001D	RF
		41B	-110H	001
		41D	-110G	001
		41G	-110G	001
		41K	-110G	001
		41M	-110G	001
		41N	-110C	001
		41T	-110C	001
		41W	-110D	001
		41X	-110E	001
		42	110A	001
D2549020613679		01G	-160B	001
		01K	-160D	001

- ITEM NOT ILLUSTRATED

ALPHA/NUMERIC INDEX

PART NUMBER	AIRLINE STOCK NUMBER	FIG NUMBER	ITEM NUMBER	TOTAL REQ'D
		01M	-160B	001
		01Q	-160B	001
		01T	-160C	001
		01V	-160E	001
		01W	-160D	001
		01Y	-160B	001
		20A	-001E	RF
		41B	-160E	001
		41D	-160D	001
		41G	-160E	001
		41H	-160D	001
		41K	-160C	001
		41M	-160C	001
		41N	-160C	001
		41T	-160B	001
		41W	-160D	001
		41X	-160D	001
		42E	-160D	001
		42	160A	001
D2549020613800		01U	-001B	RF
D2549020613865		01U	-040B	001
		06N	-001B	RF
D2549020614000		01U	-001A	RF
D2549020614065		01U	040A	001
		06N	-001A	RF
D2549020614400		01S	-001B	RF
D2549020614465		01S	-040B	001
		01T	-040M	001
		01V	-040F	001
		01W	-040H	001
		01Z	-040C	001
		06L	-001K	RF
		41B	-040L	001
		41C	-040C	001
		41G	-040D	001

- ITEM NOT ILLUSTRATED

ALPHA/NUMERIC INDEX

PART NUMBER	AIRLINE STOCK NUMBER	FIG NUMBER	ITEM NUMBER	TOTAL REQ'D
		41H	-040D	001
		41M	-040E	001
		41N	-040E	001
D2549020614474		01J	-110F	001
		01P	-110C	001
		01S	-110B	001
		01T	-110H	001
		01V	-110E	001
		01W	-110G	001
		01Z	-110C	001
		15F	-001H	RF
		41B	-110K	001
		41C	-110C	001
		41G	-110D	001
		41H	-110D	001
		41M	-110E	001
		41N	-110E	001
		41X	-110H	001
		42E	-110C	001
D2549020614600		01Q	-001K	RF
D2549020614665		01Q	-040K	001
		06L	-001F	RF
		41D	040A	001
D2549020614666		01Q	-050J	001
		07F	-001C	RF
		41D	050A	001
D2549020614674		01Q	-110F	001
		15F	-001F	RF
D2549020614800		01W	-001A	RF
			-001P	RF
D2549020614864		01T	-030D	001
		01W	030A	001
		01Y	030F	001
		05D	-001C	RF
		41A	-030C	001

- ITEM NOT ILLUSTRATED

ALPHA/NUMERIC INDEX

PART NUMBER	AIRLINE STOCK NUMBER	FIG NUMBER	ITEM NUMBER	TOTAL REQ'D
		41F	-030D	001
		41H	-030B	001
		41J	-030F	001
		41M	-030B	001
		41	-030B	001
D2549020614865		01N	-040L	001
		01W	-040L	001
		01Y	-040L	001
		06K	-001N	RF
		41F	-040M	001
		41H	-040N	001
D2549020614874		01W	-110K	001
		15G	-001L	RF
D2549020700000		01W	-001F	RF
D2549020700061		01W	-010E	001
		01Y	-010C	001
		02A	-001J	RF
		41	-010C	001
D2549020700072		01W	-090E	001
		01Y	-090E	001
		13D	-001F	RF
		41	-090G	001
D2549020700200		01Y	-001D	RF
			-001P	RF
D2549020700272		01A	-090H	001
		01B	-090H	001
		01C	-090G	001
		01H	-090H	001
		13V	-001G	RF
D2549020700400		01W	-001E	RF
			-001N	RF
D2549020700461		01S	-010C	001
		01U	-010C	001
		01V	010A	001
		01W	010A	001

- ITEM NOT ILLUSTRATED

ALPHA/NUMERIC INDEX

PART NUMBER	AIRLINE STOCK NUMBER	FIG NUMBER	ITEM NUMBER	TOTAL REQ'D
		01X	010A	001
		01Y	-010F	001
		01Z	-010B	001
		02A	-001D	RF
		41C	-010C	001
		41D	-010B	001
		41	-010B	001
D2549020700465		01W	-040E	001
			-040M	001
		01X	-040M	001
		01Z	-040J	001
			040A	001
		06L	-001C	RF
		06N	-001L	RF
		41D	-040D	001
		41F	-040L	001
		41J	-040J	001
		41K	040A	001
		41	040A	001
D2549020700466		01W	-050K	001
		01Z	-050J	001
		07Y	-001J	RF
		41K	-050H	001
D2549020700472		01M	-090H	001
		01W	-090M	001
		01Z	-090K	001
		13V	-001A	RF
		41K	-090L	001
D2549020700600		01X	-001M	RF
			-001P	RF
D2549020700672		01M	-090J	001
		01X	-090N	001
		13V	-001D	RF
D2549020700674		01X	-110H	001
		01Y	-110E	001

- ITEM NOT ILLUSTRATED

ALPHA/NUMERIC INDEX

PART NUMBER	AIRLINE STOCK NUMBER	FIG NUMBER	ITEM NUMBER	TOTAL REQ'D
		01Z	-110E	001
		15G	-001G	RF
		41D	-110F	001
		41P	110A	001
		41R	-110H	001
		41V	-110E	001
		41X	-110D	001
		41Z	-110C	001
		42A	-110C	001
		42B	-110B	001
		42D	-110B	001
		42F	110A	001
		42	-110F	001
D2549020700800		01W	-001H	RF
D2549020700872		01A	-090J	001
		13V	-001H	RF
D2549020701000		01W	-001G	RF
D2549020701065		01W	-040G	001
		06N	-001M	RF
D2549020701072		13V	-001J	RF
		41J	-090K	001
D2549020701200		01M	-001G	RF
D2549020701272		01J	-090L	001
		13V	-001K	RF
D2549020701400		01T	-001C	RF
D2549020701465		01T	-040C	001
		06M	-001F	RF
		41D	-040B	001
		41K	-040C	001
		41M	-040C	001
D2549020701466		01T	-050C	001
		07F	-001F	RF
		41D	-050B	001
		41K	-050C	001
		41M	-050C	001

- ITEM NOT ILLUSTRATED

ALPHA/NUMERIC INDEX

PART NUMBER	AIRLINE STOCK NUMBER	FIG NUMBER	ITEM NUMBER	TOTAL REQ'D
D2549020701472		01P	-090J	001
		13V	-001L	RF
D2549020701600		41A	-001M	RF
D2549020701665		06T	-001B	RF
		41A	-040K	001
D2549020701666		07J	-001A	RF
		41A	-050J	001
D2549020701672		01J	-090N	001
		13V	-001M	RF
D2549020701800		01S	-001D	RF
D2549020701874		15R	-001A	RF
		42R	-110C	001
		42S	-110J	001
D2549020702000		01U	-001E	RF
			-001N	RF
D2549020702065		01U	-040L	001
		06H	-001N	RF
		41F	-040B	001
D2549020702200		01Y	-001L	RF
D2549020702265		01Y	-040J	001
		06Q	-001A	RF
D2549020702272		01T	-090F	001
		01V	-090E	001
		01Y	-090J	001
		13D	-001H	RF
		41A	-090K	001
		41C	-090K	001
		41H	-090H	001
		41J	-090H	001
		41K	-090E	001
		41M	090A	001
		41Q	100A	001
		41R	-090L	001
		41S	-090C	001
		41U	090A	001

- ITEM NOT ILLUSTRATED

ALPHA/NUMERIC INDEX

PART NUMBER	AIRLINE STOCK NUMBER	FIG NUMBER	ITEM NUMBER	TOTAL REQ'D
		41W	-090J	001
D2549020702400		41	-001H	RF
D2549020702600		01Y	-001H	RF
D2549020702661		01Y	-010E	001
		02A	-001K	RF
		41R	010A	001
D2549020702665		01Y	-040H	001
		06P	-001L	RF
		41G	040A	001
D2549020702679		01Y	-160F	001
		20A	-001K	RF
		41G	160A	001
		41R	160A	001
D2549020702800		01W	-001B	RF
D2549020703200		01T	-001L	RF
D2549020703265		01T	-040L	001
		06M	-001M	RF
		41A	040A	001
		41	-040H	001
D2549020703400		01X	-001G	RF
D2549020703465		01X	-040G	001
		06P	-001F	RF
		41C	-040D	001
		41F	-040J	001
		41H	-040M	001
		41K	-040D	001
		41N	-040F	001
		41	-040B	001
D2549020703466		01X	-050G	001
		07G	-001B	RF
		41C	-050D	001
		41F	-050G	001
		41H	-050L	001
		41	-050B	001
D2549020703600		01W	-001M	RF

- ITEM NOT ILLUSTRATED

ALPHA/NUMERIC INDEX

PART NUMBER	AIRLINE STOCK NUMBER	FIG NUMBER	ITEM NUMBER	TOTAL REQ'D
D2549020703800		01X	-001A	RF
D2549020704000		01V	-001L	RF
D2549020704200		01W	-001L	RF
D2549020704265		01W	-040K	001
		01X	-040H	001
		06P	-001B	RF
D2549020704272		01W	-090K	001
		01X	-090G	001
		13D	-001G	RF
		41C	-090E	001
		41F	-090H	001
		41H	-090M	001
		41K	-090D	001
		41N	-090F	001
		41R	-090C	001
		41W	-090G	001
		41	-090B	001
D2549020704274		01W	-110J	001
		15G	-001F	RF
D2549020704400		01X	-001H	RF
D2549020704474		01X	-110J	001
		15G	-001K	RF
D2549020704600		01V	-001F	RF
D2549020704674		01Q	110A	001
		01S	-110F	001
		01V	-110D	001
		01W	-110B	001
		01Y	-110C	001
		01Z	-110D	001
		15G	-001D	RF
		41A	-110E	001
			110A	001
		41B	-110J	001
		41D	-110E	001
		41G	-110B	001

- ITEM NOT ILLUSTRATED

ALPHA/NUMERIC INDEX

PART NUMBER	AIRLINE STOCK NUMBER	FIG NUMBER	ITEM NUMBER	TOTAL REQ'D
		41J	-110C	001
		41M	-110H	001
		41N	110A	001
		41P	-110B	001
		41Q	120A	001
		41R	-110E	001
		41S	-110B	001
		41U	-110C	001
		41V	-110C	001
		41W	-110C	001
		41Z	-110B	001
		41	-110E	001
		42B	110A	001
		42C	-110C	001
		42D	-110C	001
		42G	-110G	001
		42K	-110D	001
D2549020704800		01Z	-001L	RF
D2549020705000		01Z	-001J	RF
D2549020705065		01Z	-040F	001
		06Q	-001D	RF
D2549020705072		01Z	-090G	001
		13D	-001D	RF
D2549020705200		41	-001B	RF
D2549020705400		01Y	-001E	RF
D2549020705600		01Y	-001J	RF
			-001Q	RF
D2549020705674		01Y	-110F	001
		15H	-001A	RF
		41F	-110D	001
		41H	-110G	001
D2549020705800		41J	-001J	RF
D2549020705861		01A	-010C	001
		01G	-010D	001
		01L	-010B	001

- ITEM NOT ILLUSTRATED

ALPHA/NUMERIC INDEX

PART NUMBER	AIRLINE STOCK NUMBER	FIG NUMBER	ITEM NUMBER	TOTAL REQ'D
		01N	-010D	001
		01U	-010E	001
		01V	-010H	001
		01W	-010F	001
		01X	-010D	001
		01Y	-010G	001
		01Z	-010F	001
		02D	-001B	RF
		41A	-010E	001
		41B	-010D	001
		41C	-010E	001
		41D	-010H	001
		41F	-010D	001
		41G	-010F	001
		41H	-010E	001
		41J	-010D	001
		41L	-010D	001
		41M	-010E	001
		41N	-010G	001
		41X	-010D	001
		41	-010G	001
D2549020705865		06T	-001E	RF
		41J	-040H	001
D2549020705866		07J	-001J	RF
		41J	-050H	001
D2549020706000		01Z	-001C	RF
D2549020706200		41C	-001J	RF
D2549020706265		06M	-001N	RF
		41C	-040H	001
D2549020706274		15C	-001L	RF
		41C	-110F	001
		41F	-110F	001
		41G	110A	001
		41H	-110E	001
		41J	110A	001

- ITEM NOT ILLUSTRATED

ALPHA/NUMERIC INDEX

PART NUMBER	AIRLINE STOCK NUMBER	FIG NUMBER	ITEM NUMBER	TOTAL REQ'D
		41K	110A	001
		41L	110A	001
		41M	110A	001
		41P	-110E	001
		41R	-110C	001
		41S	-110D	001
		41T	-110E	001
		41U	-110B	001
		41V	-110A	001
		41W	-110E	001
		41X	-110B	001
		41Y	110A	001
		41Z	-110D	001
		42B	-110D	001
D2549020706400		41	-001D	RF
D2549020706466		01L	-050F	001
		41	-050L	001
		49C	-001E	RF
D2549020706600		41D	-001B	RF
D2549020706674		15D	-001D	RF
		41D	-110B	001
		41K	-110C	001
		41M	-110C	001
		41Z	-110E	001
		42A	110A	001
		42B	-110E	001
		42C	110A	001
		42F	-110B	001
		42G	-110E	001
		42H	-110C	001
		42M	-110F	001
		42N	110A	001
D2549020706800		01Y	-001C	RF
D2549020707000		41D	-001A	RF
D2549020707074		15H	-001E	RF

- ITEM NOT ILLUSTRATED

ALPHA/NUMERIC INDEX

PART NUMBER	AIRLINE STOCK NUMBER	FIG NUMBER	ITEM NUMBER	TOTAL REQ'D
		41D	110A	001
D2549020707200		41	-001C	RF
D2549020707265		06Q	-001F	RF
		41F	-040G	001
		41H	-040L	001
		41	-040C	001
D2549020707266		07G	-001E	RF
		41F	-050F	001
		41H	-050K	001
		41	-050C	001
D2549020707400		41	-001G	RF
D2549020707480		21A	-001H	RF
		41G	-170E	001
		41M	-170D	001
		41	-170B	001
D2549020707600		01Z	-001H	RF
D2549020707800		41	-001A	RF
D2549020707865		06N	-001N	RF
		41	-040M	001
D2549020708000		41G	-001L	RF
D2549020708061		02B	-001A	RF
		41G	-010E	001
D2549020708072		13G	-001E	RF
		41G	-090L	001
		41L	-090B	001
		41P	-090C	001
D2549020708078		19F	-001J	RF
		41G	-150H	001
		41P	-150C	001
		42G	-150D	001
		42H	150A	001
		42N	-150F	001
		42R	150A	001
		42S	-150C	001
		42T	-150B	001

- ITEM NOT ILLUSTRATED

ALPHA/NUMERIC INDEX

PART NUMBER	AIRLINE STOCK NUMBER	FIG NUMBER	ITEM NUMBER	TOTAL REQ'D
		42U	-150B	001
D2549020708200		41F	-001F	RF
			-001P	RF
D2549020708400		41F	-001D	RF
D2549020708465		06Q	-001L	RF
		41F	-040D	001
		41H	-040B	001
		42B	-040M	001
D2549020708600		41F	-001G	RF
D2549020708800		41F	-001E	RF
D2549020708865		06Q	-001M	RF
		41F	-040E	001
D2549020708866		41F	-050K	001
		41	-050M	001
		49B	-001J	RF
D2549020709000		41D	-001C	RF
D2549020709200		41F	-001H	RF
			-001R	RF
D2549020709400		41F	-001B	RF
D2549020709461		02B	-001B	RF
		41A	-010D	001
		41F	-010B	001
D2549020709600		41C	-001M	RF
D2549020709800		41F	-001J	RF
D2549020710000		41A	-001B	RF
D2549020710061		02A	-001M	RF
		41A	-010B	001
		41J	-010B	001
D2549020710063		41A	-020B	001
		41J	-020B	001
		41R	-020C	001
		41V	-020B	001
		41Y	-020C	001
		4	-001L	RF
D2549020710064		05C	-001C	RF

- ITEM NOT ILLUSTRATED

ALPHA/NUMERIC INDEX

PART NUMBER	AIRLINE STOCK NUMBER	FIG NUMBER	ITEM NUMBER	TOTAL REQ'D
		41A	-030B	001
		41J	-030B	001
D2549020710065		06Q	-001H	RF
		41A	-040B	001
D2549020710066		07G	-001G	RF
		41A	-050B	001
D2549020710071		12D	-001H	RF
		41A	-080B	001
		41J	-080B	001
D2549020710072		13E	-001B	RF
		41A	-090B	001
D2549020710073		14A	-001E	RF
		41A	-100B	001
		41J	-100B	001
		41R	-100C	001
		41V	-100B	001
		41Y	-100B	001
		42E	100A	001
		42K	-100B	001
D2549020710075		16C	-001G	RF
		41A	-120B	001
		41J	-120B	001
		41V	-120C	001
		41Y	-120C	001
		42K	-120B	001
D2549020710076		17D	-001G	RF
		41A	-130B	001
		41J	-130B	001
		41V	-130C	001
		41Y	-130C	001
		42K	-130B	001
		42L	-130F	001
		42R	-130C	001
		42T	-130C	001
D2549020710078		19F	-001H	RF

- ITEM NOT ILLUSTRATED

ALPHA/NUMERIC INDEX

PART NUMBER	AIRLINE STOCK NUMBER	FIG NUMBER	ITEM NUMBER	TOTAL REQ'D
		41A	-150B	001
		41J	-150B	001
		41V	-150C	001
		41Y	-150C	001
		42K	-150B	001
D2549020710079		20B	-001A	RF
		41A	-160B	001
		41J	-160B	001
		41V	-160C	001
		41Y	-160C	001
		42K	-160B	001
D2549020710080		21A	-001J	RF
		41A	-170B	001
		41J	-170B	001
D2549020710200		41C	-001K	RF
D2549020710274		15H	-001C	RF
		41C	-110G	001
		41D	-110J	001
		41H	-110H	001
		41K	-110E	001
		41R	-110G	001
		41W	-110H	001
		42E	-110D	001
D2549020710400		41D	-001M	RF
D2549020710600		41F	-001K	RF
D2549020710674		15H	-001F	RF
		41F	-110E	001
D2549020710683		26K	-001A	RF
		41C	-200C	001
		41F	-200B	001
		41G	200A	001
		41H	200A	001
		41J	200A	001
		41K	200A	001
		41L	200A	001

- ITEM NOT ILLUSTRATED

ALPHA/NUMERIC INDEX

PART NUMBER	AIRLINE STOCK NUMBER	FIG NUMBER	ITEM NUMBER	TOTAL REQ'D
		41M	200A	001
		41S	-200B	001
D2549020710800		41A	-001C	RF
D2549020710865		06Q	-001J	RF
		41A	-040C	001
		41K	-040L	001
D2549020710872		13E	-001C	RF
		41A	-090C	001
		41K	-090K	001
D2549020711000		41C	-001D	RF
D2549020711200		41C	-001A	RF
D2549020711400		41C	-001E	RF
D2549020711600		41N	-001G	RF
D2549020711664		05D	-001E	RF
		41N	-030F	001
D2549020711665		06W	-001B	RF
		41N	-040G	001
		41S	-040C	001
D2549020711666		07Y	-001H	RF
		41N	-050F	001
		41S	-050C	001
D2549020712000		41E	-001A	RF
D2549020712064		05E	-001A	RF
		41E	030A	001
D2549020712065		06S	-001A	RF
		41E	040A	001
D2549020712066		07H	-001A	RF
		41E	050A	001
D2549020712069		10	-001B	RF
		41E	060A	001
D2549020712072		13F	-001A	RF
		41E	080A	001
D2549020712078		19G	-001A	RF
		41E	100A	001
D2549020712083		26H	-001A	RF

- ITEM NOT ILLUSTRATED

ALPHA/NUMERIC INDEX

PART NUMBER	AIRLINE STOCK NUMBER	FIG NUMBER	ITEM NUMBER	TOTAL REQ'D
		41E	120A	001
D2549020712200		41C	-001B	RF
D2549020712400		41A	-001E	RF
D2549020712471		12D	-001G	RF
		41A	-080E	001
D2549020712600		41E	-001B	RF
D2549020712683		26L	-001A	RF
		41E	-120B	001
D2549020712800		41A	-001G	RF
D2549020713000		41J	-001B	RF
D2549020713066		07J	-001C	RF
		41J	-050B	001
D2549020713200		41K	-001D	RF
D2549020713400		41F	-001C	RF
D2549020713465		06Q	-001K	RF
		41F	-040C	001
D2549020713472		13E	-001F	RF
		41F	-090C	001
D2549020713600		41A	-001H	RF
D2549020713665		06T	-001A	RF
		41A	-040F	001
D2549020713672		13E	-001G	RF
		41A	-090F	001
		41J	-090D	001
		41P	-090B	001
		41S	-090G	001
		41V	-090E	001
D2549020713800		41A	-001K	RF
			-001N	RF
D2549020713881		22H	-001B	RF
		41A	-180B	001
		41P	-180C	001
		41W	180A	001
D2549020713883		26J	-001A	RF
		41A	-200E	001

- ITEM NOT ILLUSTRATED

ALPHA/NUMERIC INDEX

PART NUMBER	AIRLINE STOCK NUMBER	FIG NUMBER	ITEM NUMBER	TOTAL REQ'D
D2549020714000		41V	-001L	RF
D2549020714065		06Z	-001F	RF
		41V	-040K	001
		41Y	-040G	001
D2549020714066		07R	-001A	RF
		41V	-050G	001
		41Y	-050G	001
D2549020714072		13D	-001L	RF
		41V	-090H	001
		41Y	-090F	001
D2549020714400		41A	-001L	RF
D2549020714600		41J	-001D	RF
D2549020714665		06T	-001F	RF
		41J	-040D	001
D2549020800000		41R	-001H	RF
			-001N	RF
D2549020800065		06X	-001Q	RF
D2549020800065		06X	-001F	RF
		41R	-040H	001
			-040N	001
			-040Q	001
			-040R	001
		48A	-001N	RF
			-001Q	RF
D2549020800066		07Y	-001M	RF
			-001P	RF
		41P	-050D	001
			-050K	001
		41R	-050G	001
D2549020800200		41U	-001C	RF
D2549020800265		06Y	-001D	RF
		41U	-040C	001
D2549020800400		41T	-001A	RF
D2549020800465		06X	-001J	RF
		41T	040A	001

- ITEM NOT ILLUSTRATED

ALPHA/NUMERIC INDEX

PART NUMBER	AIRLINE STOCK NUMBER	FIG NUMBER	ITEM NUMBER	TOTAL REQ'D
D2549020800466		07N	-001F	RF
		41S	-050J	001
		41T	050A	001
D2549020800600		41R	-001C	RF
D2549020800665		06X	-001A	RF
		41R	-040C	001
D2549020800666		07N	-001A	RF
		41R	-050C	001
D2549020800800		41P	-001J	RF
D2549020800865		06W	-001H	RF
		41P	-040J	001
D2549020800866		07L	-001H	RF
		41P	-050F	001
D2549020800882		23D	-001B	RF
		41P	-190E	001
		41R	190A	001
		41Y	-190D	001
		41Z	-190E	001
		42C	190A	001
		42E	-190B	001
		42G	-190B	001
		42J	-190C	001
		42K	190A	001
		42L	190A	001
		42M	190A	001
		42N	190A	001
		42R	190A	001
		42T	-190D	001
		42	-190E	001
D2549020801000		41T	-001C	RF
D2549020801080		21B	-001E	RF
		41T	-170B	001
		41W	-170D	001
		41X	-170C	001
		42E	-170C	001

- ITEM NOT ILLUSTRATED

ALPHA/NUMERIC INDEX

PART NUMBER	AIRLINE STOCK NUMBER	FIG NUMBER	ITEM NUMBER	TOTAL REQ'D
		42	170A	001
D2549020801200		41U	-001A	RF
D2549020801265		06Y	-001B	RF
		41U	040A	001
D2549020801266		07P	-001C	RF
		41U	050A	001
D2549020801400		41V	-001D	RF
D2549020801465		41V	-040D	001
		41Y	-040E	001
		48	-001A	RF
D2549020801466		07R	-001B	RF
		41V	-050D	001
D2549020801600		41N	-001J	RF
D2549020801665		06W	-001C	RF
		41N	-040J	001
D2549020801666		07L	-001B	RF
		41N	-050H	001
		41S	-050B	001
		41T	-050D	001
D2549020801800		42C	-001F	RF
D2549020801865		42C	-040F	001
		48B	-001K	RF
D2549020801866		07U	-001E	RF
		42C	-050F	001
D2549020802000		41L	-001M	RF
		41P	-001C	RF
D2549020802065		06V	-001H	RF
		41P	-040C	001
D2549020802066		07L	-001N	RF
		41L	-050K	001
D2549020802200		41P	-001F	RF
D2549020802265		06W	-001E	RF
		41P	-040F	001
D2549020802400		41V	-001K	RF
D2549020802461		02C	-001G	RF

- ITEM NOT ILLUSTRATED

ALPHA/NUMERIC INDEX

PART NUMBER	AIRLINE STOCK NUMBER	FIG NUMBER	ITEM NUMBER	TOTAL REQ'D
		41V	-010B	001
		41Y	-010B	001
D2549020802464		05G	-001J	RF
		41V	-030C	001
		41Y	-030D	001
D2549020802465		06Z	-001E	RF
		41J	-040B	001
		41V	-040J	001
		41Y	-040D	001
D2549020802466		07Q	-001D	RF
		41V	-050H	001
		41Y	-050D	001
D2549020802600		41S	-001A	RF
D2549020802664		05C	-001M	RF
		41S	030A	001
		41U	-030B	001
D2549020802665		41S	-040L	001
		48F	-001D	RF
D2549020802666		07K	-001M	RF
		41S	050A	001
D2549020802674		15K	-001A	RF
		41S	110A	001
		41T	110A	001
D2549020802680		01Y	-170F	001
		21B	-001A	RF
		41L	-170C	001
		41N	-170F	001
		41P	-170C	001
		41R	-170B	001
		41S	170A	001
		41T	170A	001
		41U	170A	001
		41V	170A	001
		41W	170A	001
		41X	170A	001

- ITEM NOT ILLUSTRATED

ALPHA/NUMERIC INDEX

PART NUMBER	AIRLINE STOCK NUMBER	FIG NUMBER	ITEM NUMBER	TOTAL REQ'D
		41Y	170A	001
		41Z	170A	001
		42A	170A	001
		42B	170A	001
		42C	170A	001
		42D	170A	001
		42E	-170B	001
		42F	170A	001
		42G	170A	001
		42H	-170B	001
		42J	170A	001
		42K	170A	001
		42L	170A	001
		42M	170A	001
		42N	170A	001
		42P	170A	001
		42Q	170A	001
		42R	-170C	001
		42S	170A	001
		42T	170A	001
		42U	170A	001
		42	-170C	001
D2549020802800		41Q	-001A	RF
D2549020802865		06V	-001K	RF
		41Q	040A	001
D2549020802866		07M	-001A	RF
		41Q	050A	001
D2549020802868		41Q	060A	001
		9	-001A	RF
D2549020802875		16D	-001A	RF
		41Q	130A	001
		42K	-120F	001
D2549020803000		41S	-001C	RF
D2549020803200		41S	-001J	RF
D2549020803265		06X	-001M	RF

- ITEM NOT ILLUSTRATED

ALPHA/NUMERIC INDEX

PART NUMBER	AIRLINE STOCK NUMBER	FIG NUMBER	ITEM NUMBER	TOTAL REQ'D
		41S	-040G	001
D2549020803266		07N	-001L	RF
		41S	-050H	001
D2549020803400		41S	-001H	RF
D2549020803465		06X	-001G	RF
		41S	040A	001
D2549020803466		07N	-001K	RF
		41S	-050G	001
D2549020803472		13G	-001F	RF
		41S	-090F	001
D2549020803600		41S	-001L	RF
D2549020803666		07P	-001A	RF
		41S	-050K	001
D2549020803672		13G	-001D	RF
		41S	-090J	001
D2549020803800		41P	-001L	RF
D2549020803866		07N	-001E	RF
		41P	-050H	001
D2549020804000		41V	-001G	RF
D2549020804064		05G	-001H	RF
		41V	-030B	001
		41Y	-030C	001
		41Z	-030B	001
D2549020804065		06Z	-001C	RF
		41V	-040G	001
		41Y	-040C	001
		42B	-040F	001
		42D	040A	001
		42F	-040D	001
D2549020804066		07S	-001F	RF
		41V	-050L	001
		41Y	-050C	001
		41Z	-050B	001
D2549020804200		41Y	-001C	RF
D2549020804400		42L	-001K	RF

- ITEM NOT ILLUSTRATED

ALPHA/NUMERIC INDEX

PART NUMBER	AIRLINE STOCK NUMBER	FIG NUMBER	ITEM NUMBER	TOTAL REQ'D
D2549020804465		42L	-040K	001
		48K	-001D	RF
D2549020804800		41Y	-001M	RF
D2549020804872		13K	-001A	RF
		41Y	-090J	001
		42A	-090F	001
D2549020805000		41Y	-001B	RF
D2549020805066		07S	-001C	RF
		41Y	-050B	001
		41Z	-050D	001
D2549020805200		42E	-001A	RF
D2549020805261		02C	-001L	RF
		42E	010A	001
		42K	-010B	001
D2549020805263		04A	-001S	RF
		42E	020A	001
		42K	-020B	001
D2549020805264		05H	-001G	RF
		42E	030A	001
		42K	-030B	001
		42L	-030D	001
		42R	-030B	001
		42T	-030C	001
D2549020805265		42E	040A	001
		48D	-001C	RF
D2549020805266		07V	-001K	RF
		42E	050A	001
D2549020805272		13M	-001E	RF
		42E	090A	001
D2549020805400		42A	-001B	RF
			-001P	RF
D2549020805464		05H	-001B	RF
		41Z	-030E	001
		42A	-030B	001
		42B	030A	001

- ITEM NOT ILLUSTRATED

ALPHA/NUMERIC INDEX

PART NUMBER	AIRLINE STOCK NUMBER	FIG NUMBER	ITEM NUMBER	TOTAL REQ'D
		42C	030A	001
		42D	-030B	001
		42E	-030B	001
		42F	030A	001
		42G	-030E	001
		42H	-030B	001
		42J	-030B	001
		42K	-030C	001
		42L	-030B	001
		42M	-030B	001
		42N	030A	001
		42P	-030B	001
		42Q	-030B	001
		42R	-030E	001
		42S	030A	001
		42T	030A	001
		42U	-030B	001
		42	-030D	001
D2549020805466		07T	-001A	RF
		42A	-050B	001
		42E	-050C	001
		42	-050H	001
D2549020805472		13K	-001H	RF
		42A	-090B	001
		42E	-090C	001
		42	-090F	001
D2549020805481		22H	-001C	RF
		42A	-180B	001
		42E	-180B	001
		42G	-180C	001
		42J	-180B	001
		42K	-180D	001
		42	-180D	001
D2549020805600		41X	-001J	RF
D2549020805800		42	-001D	RF

- ITEM NOT ILLUSTRATED

ALPHA/NUMERIC INDEX

PART NUMBER	AIRLINE STOCK NUMBER	FIG NUMBER	ITEM NUMBER	TOTAL REQ'D
D2549020805865		42	-040D	001
		48	-001K	RF
D2549020805866		07T	-001B	RF
		42	-050D	001
D2549020805874		15H	-001K	RF
		42	-110D	001
D2549020806000		41X	-001H	RF
D2549020806000		41X	-001N	RF
D2549020806066		07S	-001A	RF
		41X	050A	001
		41Z	-050E	001
D2549020806072		13J	-001G	RF
		41X	-090G	001
		42	-090C	001
D2549020806200		42A	-001C	RF
D2549020806400		41Y	-001D	RF
D2549020806472		13L	-001K	RF
		41J	-090B	001
		41V	-090G	001
		41Y	-090D	001
D2549020806600		42B	-001A	RF
D2549020806800		41Z	-001C	RF
D2549020806864		05F	-001C	RF
		41Z	-030C	001
D2549020806865		41Z	-040C	001
		42C	-040C	001
		48B	-001B	RF
D2549020806866		07S	-001H	RF
		41Z	-050C	001
D2549020807000		41Y	-001H	RF
D2549020807200		42E	-001G	RF
			-001N	RF
D2549020807265		42E	-040G	001
		48D	-001F	RF
D2549020807266		07W	-001J	RF

- ITEM NOT ILLUSTRATED

ALPHA/NUMERIC INDEX

PART NUMBER	AIRLINE STOCK NUMBER	FIG NUMBER	ITEM NUMBER	TOTAL REQ'D
		42E	-050G	001
D2549020807272		13N	-001J	RF
		42E	-090G	001
D2549020807274		15L	-001G	RF
		42E	-110F	001
D2549020807400		42	-001B	RF
D2549020807600		41Y	-001A	RF
D2549020807664		05G	-001L	RF
		41Y	030A	001
D2549020807665		06Z	-001J	RF
		41Y	040A	001
		42A	-040K	001
		42C	-040B	001
		42G	-040D	001
D2549020807666		07S	-001B	RF
		41Y	050A	001
		41Z	050A	001
D2549020807672		13J	-001H	RF
		41Y	090A	001
		41Z	-090E	001
		42A	-090E	001
D2549020807800		42A	-001K	RF
D2549020807864		05H	-001D	RF
		42A	-030D	001
		42B	-030C	001
		42C	-030B	001
		42D	-030C	001
		42G	-030D	001
		42J	030A	001
		42M	030A	001
		42N	-030H	001
		42P	-030C	001
		42Q	-030H	001
		42U	030A	001
D2549020808200		41Y	-001E	RF

- ITEM NOT ILLUSTRATED

ALPHA/NUMERIC INDEX

PART NUMBER	AIRLINE STOCK NUMBER	FIG NUMBER	ITEM NUMBER	TOTAL REQ'D
D2549020808274		15H	-001J	RF
		41Y	-110D	001
		42B	-110J	001
		42F	-110F	001
D2549020808400		41W	-001L	RF
D2549020808465		06Z	-001G	RF
		41W	-040H	001
		41X	-040H	001
D2549020808466		07Q	-001K	RF
		41W	-050G	001
		41X	-050G	001
D2549020808600		41W	-001H	RF
D2549020808665		41W	-040G	001
		41X	-040G	001
		42	-040C	001
		48	-001C	RF
D2549020808800		41V	-001M	RF
D2549020808866		07R	-001K	RF
		41V	-050K	001
		41X	-050C	001
		42A	-050C	001
D2549020808872		01S	-090F	001
		13J	-001D	RF
		41V	-090J	001
		42A	-090C	001
		42B	-090B	001
		42D	-090B	001
		42	-090E	001
D2549020809000		41V	-001F	RF
D2549020809065		06Z	-001B	RF
		41V	-040F	001
		42B	040A	001
		42D	-040D	001
D2549020809066		07R	-001C	RF
		41V	-050F	001

- ITEM NOT ILLUSTRATED

ALPHA/NUMERIC INDEX

PART NUMBER	AIRLINE STOCK NUMBER	FIG NUMBER	ITEM NUMBER	TOTAL REQ'D
D2549020809400		41W	-001B	RF
D2549020809464		05G	-001E	RF
		41W	-030B	001
		41X	-030B	001
		42	-030B	001
D2549020809465		06Y	-001K	RF
		41W	-040B	001
		41X	-040C	001
		42	-040B	001
D2549020809466		07R	-001F	RF
		41W	-050B	001
D2549020809480		21B	-001F	RF
		41W	-170B	001
		41X	-170B	001
		42	-170B	001
D2549020809600		42H	-001D	RF
D2549020809665		42H	-040D	001
		48G	-001M	RF
D2549020809800		41V	-001E	RF
D2549020809865		06R	-001D	RF
		41V	-040E	001
		41Y	-040B	001
		42A	-040J	001
		42F	040A	001
D2549020809866		07Q	-001J	RF
		41V	-050E	001
D2549020810000		41Y	-001F	RF
D2549020810065		06Z	-001L	RF
		41Y	-040F	001
		42A	-040M	001
		42B	-040J	001
D2549020810066		07S	-001D	RF
		41Y	-050E	001
			-050F	001
D2549020810072		13J	-001L	RF

- ITEM NOT ILLUSTRATED

ALPHA/NUMERIC INDEX

PART NUMBER	AIRLINE STOCK NUMBER	FIG NUMBER	ITEM NUMBER	TOTAL REQ'D
		41Y	-090E	001
		42A	-090K	001
		42B	-090J	001
D2549020810083		26M	-001F	RF
		41Y	-200C	001
D2549020810200		41W	-001K	RF
D2549020810283		26P	-001A	RF
		41W	-200E	001
		41X	-200D	001
		41Y	-200D	001
		42A	-200C	001
		42B	-200D	001
		42C	-200C	001
		42D	200A	001
		42E	-200B	001
		42F	-200C	001
		42G	-200D	001
		42	-200C	001
D2549020810400		42C	-001B	RF
D2549020810472		13L	-001E	RF
		42C	-090B	001
		42G	-090D	001
D2549020810600		41Y	-001J	RF
D2549020810800		42D	-001C	RF
D2549020810865		42D	-040C	001
		48C	-001C	RF
D2549020810866		07U	-001M	RF
		42D	-050C	001
D2549020811200		42E	-001D	RF
D2549020811400		41Y	-001G	RF
D2549020811466		07S	-001E	RF
		41X	-050H	001
D2549020811600		41Z	-001F	RF
D2549020811665		41Z	-040F	001
		42B	-040E	001

- ITEM NOT ILLUSTRATED

ALPHA/NUMERIC INDEX

PART NUMBER	AIRLINE STOCK NUMBER	FIG NUMBER	ITEM NUMBER	TOTAL REQ'D
		42C	-040H	001
		42F	-040B	001
		48B	-001C	RF
D2549020811666		07S	-001J	RF
		41Z	-050F	001
D2549020811672		13K	-001D	RF
		41Z	-090F	001
		42B	-090E	001
		42C	-090F	001
		42F	-090B	001
D2549020811800		42	-001C	RF
D2549020811866		07S	-001M	RF
		42	-050C	001
D2549020811871		12G	-001A	RF
		42B	-080D	001
		42E	-080D	001
		42F	-080E	001
		42G	080A	001
		42H	-080D	001
		42J	-080B	001
		42K	080A	001
		42L	-080B	001
		42M	-080C	001
		42N	080A	001
		42P	-080B	001
		42Q	080A	001
		42R	080A	001
		42S	-080C	001
		42T	-080B	001
		42U	080A	001
		42	-080C	001
D2549020811874		15H	-001M	RF
		42	-110C	001
D2549020812000		42A	-001A	RF
D2549020812065		42A	040A	001

- ITEM NOT ILLUSTRATED

ALPHA/NUMERIC INDEX

PART NUMBER	AIRLINE STOCK NUMBER	FIG NUMBER	ITEM NUMBER	TOTAL REQ'D
		42C	040A	001
		42F	-040E	001
		48B	-001D	RF
D2549020812066		07Q	-001M	RF
		42A	050A	001
		42C	050A	001
		42F	-050E	001
D2549020812072		13K	-001G	RF
		42A	090A	001
		42C	090A	001
		42F	-090C	001
D2549020812200		42A	-001M	RF
D2549020812264		05H	-001E	RF
		42A	-030E	001
		42B	-030D	001
		42D	030A	001
		42F	-030B	001
		42G	-030C	001
		42H	-030D	001
		42K	030A	001
		42M	-030C	001
		42Q	-030E	001
		42R	-030F	001
D2549020812266		07T	-001J	RF
		42A	-050K	001
		42B	-050H	001
D2549020812283		26M	-001G	RF
		42A	-200E	001
		42B	-200C	001
D2549020812400		42C	-001H	RF
D2549020812600		42C	-001M	RF
D2549020812800		42B	-001C	RF
			-001N	RF
D2549020812865		42B	-040C	001
		48B	-001E	RF

- ITEM NOT ILLUSTRATED

ALPHA/NUMERIC INDEX

PART NUMBER	AIRLINE STOCK NUMBER	FIG NUMBER	ITEM NUMBER	TOTAL REQ'D
D2549020812866		07T	-001L	RF
		42B	-050C	001
D2549020812872		13K	-001L	RF
		42B	-090C	001
D2549020812874		15H	-001L	RF
		42B	-110C	001
D2549020812878		19H	-001A	RF
		42B	-150B	001
D2549020813000		42B	-001L	RF
D2549020813065		42B	-040L	001
		42F	-040F	001
		48B	-001H	RF
D2549020813066		07U	-001F	RF
		42B	-050J	001
		42F	-050F	001
D2549020813072		13L	-001D	RF
		42B	-090L	001
		42F	-090E	001
D2549020813200		42D	-001E	RF
D2549020813265		42D	-040E	001
		48C	-001D	RF
D2549020813266		07V	-001D	RF
		42D	-050E	001
D2549020813271		12G	-001B	RF
		42D	-080E	001
D2549020813272		13L	-001M	RF
		42D	-090E	001
D2549020813274		15K	-001D	RF
		42D	-110D	001
D2549020813279		20C	-001A	RF
		42D	-160B	001
		42G	-160D	001
D2549020813400		42C	-001G	RF
D2549020813465		42C	-040G	001
		48B	-001L	RF

- ITEM NOT ILLUSTRATED

ALPHA/NUMERIC INDEX

PART NUMBER	AIRLINE STOCK NUMBER	FIG NUMBER	ITEM NUMBER	TOTAL REQ'D
D2549020813466		07V	-001A	RF
		42C	-050G	001
D2549020813472		13L	-001F	RF
		42C	-090E	001
D2549020813600		42	-001K	RF
D2549020813665		42E	-040B	001
		42	-040H	001
		48C	-001B	RF
D2549020813672		13L	-001J	RF
		42E	-090B	001
		42	-090G	001
D2549020813800		42	-001E	RF
D2549020814000		42B	-001F	RF
D2549020814200		42A	-001J	RF
			-001N	RF
D2549020814266		07T	-001H	RF
		42A	-050J	001
		42F	050A	001
D2549020814272		13J	-001J	RF
		42A	-090J	001
		42F	090A	001
D2549020814400		42B	-001B	RF
D2549020814466		07T	-001K	RF
		42B	-050B	001
		42D	-050B	001
		42	-050G	001
D2549020814600		42C	-001A	RF
D2549020814800		42C	-001C	RF
D2549020814866		07U	-001K	RF
		42C	-050C	001
D2549021500083		01A	-200C	001
		1	-200C	001
		26A	-001A	RF
D2549030400000		41S	-001M	RF
D2549030400065		06X	-001N	RF

- ITEM NOT ILLUSTRATED

ALPHA/NUMERIC INDEX

PART NUMBER	AIRLINE STOCK NUMBER	FIG NUMBER	ITEM NUMBER	TOTAL REQ'D
		41S	-040J	001
D2549030400066		07P	-001B	RF
		41S	-050L	001
		41U	-050C	001
D2549030400200		41S	-001E	RF
			-001N	RF
D2549030400265		06U	-001N	RF
		41S	-040K	001
D2549030400400		41U	-001E	RF
D2549030400466		07P	-001D	RF
		41U	-050E	001
D2549030400600		41Z	-001B	RF
D2549030400665		41Z	-040B	001
		42A	-040H	001
		48	-001F	RF
D2549030400672		13K	-001B	RF
		41Y	-090C	001
		41Z	-090B	001
		42A	-090H	001
		42B	-090F	001
		42D	090A	001
		42F	-090D	001
D2549030401000		41X	-001L	RF
D2549030401061		02D	-001A	RF
		41V	-010C	001
		41Y	-010C	001
		42A	-010C	001
		42P	-010D	001
D2549030401065		41X	-040J	001
		42E	-040D	001
		48	-001E	RF
D2549030401072		13J	-001K	RF
		41X	-090J	001
		42E	-090D	001
D2549030401200		42A	-001D	RF

- ITEM NOT ILLUSTRATED

ALPHA/NUMERIC INDEX

PART NUMBER	AIRLINE STOCK NUMBER	FIG NUMBER	ITEM NUMBER	TOTAL REQ'D
D2549030401266		07T	-001C	RF
		42A	-050D	001
D2549030401272		13K	-001J	RF
		42A	-090D	001
		42D	-090M	001
		42G	-090K	001
D2549030401400		41V	-001J	RF
			-001N	RF
D2549030401463		01H	-020C	001
		01L	-020C	001
		41F	-020D	001
		41H	-020E	001
		41V	-020C	001
		41X	-020D	001
		41Y	-020B	001
		41Z	020A	001
		42A	020A	001
		42B	020A	001
		42C	020A	001
		42D	020A	001
		42E	-020B	001
		42F	020A	001
		42G	020A	001
		42H	-020B	001
		42J	020A	001
		42K	020A	001
		42L	020A	001
		42M	020A	001
		42N	020A	001
		42P	020A	001
		42Q	020A	001
		42R	-020D	001
		42S	020A	001
		42T	-020C	001
		42U	-020B	001

- ITEM NOT ILLUSTRATED

ALPHA/NUMERIC INDEX

PART NUMBER	AIRLINE STOCK NUMBER	FIG NUMBER	ITEM NUMBER	TOTAL REQ'D
		42	-020C	001
		4	-001M	RF
D2549030401465		06Z	-001D	RF
		41V	-040H	001
		41Y	-040J	001
		42A	-040G	001
		42B	-040K	001
D2549030401466		07R	-001G	RF
		41V	-050J	001
		41Y	-050J	001
D2549030401472		13J	-001B	RF
		41U	-090B	001
		41V	-090F	001
		41Y	-090H	001
		42A	-090G	001
		42B	-090K	001
D2549030401565		06Z	-001N	RF
		41V	-040M	001
		41Y	-040K	001
D2549030401566		07R	-001N	RF
		41V	-050M	001
		41Y	-050K	001
D2549030401600		41X	-001B	RF
D2549030401672		13L	-001G	RF
		41X	-090B	001
		42	-090H	001
D2549030401800		41Z	-001L	RF
D2549030402000		41X	-001K	RF
D2549030402081		22G	-001C	RF
		41X	-180D	001
		41Y	-180B	001
		41Z	-180C	001
		42A	-180C	001
		42B	-180B	001
		42D	180A	001

- ITEM NOT ILLUSTRATED

ALPHA/NUMERIC INDEX

PART NUMBER	AIRLINE STOCK NUMBER	FIG NUMBER	ITEM NUMBER	TOTAL REQ'D
		42F	-180B	001
		42G	-180D	001
		42	180A	001
D2549030402082		23B	-001K	RF
		41X	-190E	001
		42E	-190E	001
		42N	-190F	001
		42	190A	001
D2549030402083		26K	-001G	RF
		41N	-200C	001
		41T	-200C	001
		41W	-200C	001
		41X	-200B	001
D2549030402200		41X	-001C	RF
D2549030402263		04A	-001N	RF
		41X	-020B	001
		42	-020B	001
D2549030402266		07R	-001H	RF
		41X	-050B	001
		42	-050B	001
D2549030402272		13J	-001C	RF
		41X	-090C	001
		42D	-090C	001
		42	-090B	001
D2549030402400		41X	-001G	RF
D2549030402466		07R	-001M	RF
		41X	-050E	001
D2549030402472		13J	-001F	RF
		41X	-090F	001
D2549030402477		18	-001M	RF
		41X	-140C	001
D2549030402600		41V	-001B	RF
D2549030402665		06Y	-001G	RF
		41V	-040B	001
D2549030402666		07Q	-001B	RF

- ITEM NOT ILLUSTRATED

ALPHA/NUMERIC INDEX

PART NUMBER	AIRLINE STOCK NUMBER	FIG NUMBER	ITEM NUMBER	TOTAL REQ'D
		41V	-050B	001
D2549030402800		41V	-001C	RF
D2549030402865		06Y	-001N	RF
		41V	-040C	001
		42A	-040D	001
D2549030402866		07Q	-001G	RF
		41V	-050C	001
D2549030403000		41W	-001F	RF
D2549030403065		06E	-001P	RF
		06Z	-001A	RF
		41W	-040E	001
		41X	-040B	001
		42	-040J	001
D2549030403066		07R	-001D	RF
		41W	-050E	001
D2549030403400		41W	-001D	RF
D2549030403464		05G	-001G	RF
		41W	-030D	001
		41X	-030C	001
D2549030403465		06Y	-001M	RF
		41W	-040D	001
		41X	-040E	001
		42	040A	001
D2549030403466		07Q	-001F	RF
		41W	-050D	001
D2549030403600		41W	-001G	RF
D2549030403664		05F	-001B	RF
		41W	-030E	001
		41X	-030D	001
D2549030403665		41W	-040F	001
		41X	-040F	001
		48	-001B	RF
D2549030403666		07Q	-001L	RF
		41W	-050F	001
D2549030403800		41T	-001B	RF

- ITEM NOT ILLUSTRATED

ALPHA/NUMERIC INDEX

PART NUMBER	AIRLINE STOCK NUMBER	FIG NUMBER	ITEM NUMBER	TOTAL REQ'D
D2549030403865		06U	-001M	RF
		41T	-040B	001
D2549030403866		07N	-001G	RF
		41T	-050B	001
D2549030404000		42	-001J	RF
			-001N	RF
D2549030404200		41Y	-001K	RF
D2549030404265		06Z	-001K	RF
		41Y	-040H	001
		41Z	-040H	001
D2549030404266		07S	-001G	RF
		41Y	-050H	001
D2549030404272		13J	-001M	RF
		41Y	-090G	001
		41Z	-090C	001
		42C	-090C	001
		42D	-090J	001
		42E	-090E	001
		42F	-090G	001
		42G	-090E	001
D2549030404400		41W	-001J	RF
D2549030404483		26P	-001B	RF
		41W	-200F	001
		41X	-200C	001
		42E	-200D	001
D2549030404600		42	-001A	RF
D2549030404664		05H	-001C	RF
		42E	-030D	001
		42	030A	001
D2549030404666		07U	-001H	RF
		42	050A	001
D2549030404683		26P	-001C	RF
		42	200A	001
D2549030404800		41Z	-001E	RF
D2549030404865		41Z	-040E	001

- ITEM NOT ILLUSTRATED

ALPHA/NUMERIC INDEX

PART NUMBER	AIRLINE STOCK NUMBER	FIG NUMBER	ITEM NUMBER	TOTAL REQ'D
		42A	-040E	001
		48	-001H	RF
D2549030404871		12F	-001A	RF
		41Z	-080D	001
		42A	-080D	001
D2549030405000		41Z	-001K	RF
D2549030405066		07U	-001J	RF
		41Z	-050J	001
D2549030405072		13K	-001F	RF
		41Z	090A	001
D2549030405082		01V	-190F	001
		23B	-001L	RF
		41Y	-190B	001
		41Z	-190D	001
		42A	-190B	001
		42B	-190C	001
		42D	190A	001
		42E	-190C	001
		42F	-190C	001
		42G	-190D	001
		42H	-190B	001
		42K	-190C	001
		42L	-190B	001
		42N	-190D	001
		42Q	-190C	001
		42R	-190B	001
		42T	-190C	001
		42	-190D	001
D2549030405200		41X	-001F	RF
D2549030405263		04A	-001P	RF
		41X	-020C	001
		42E	-020C	001
D2549030405266		07R	-001L	RF
		41X	-050D	001
D2549030405272		13J	-001E	RF

- ITEM NOT ILLUSTRATED

ALPHA/NUMERIC INDEX

PART NUMBER	AIRLINE STOCK NUMBER	FIG NUMBER	ITEM NUMBER	TOTAL REQ'D
		41X	-090E	001
		42	090A	001
D2549030405400		41X	-001E	RF
D2549030405600		41Y	-001L	RF
			-001N	RF
D2549030405800		42B	-001J	RF
D2549030406000		42C	-001J	RF
D2549030406065		42C	-040J	001
		48B	-001M	RF
D2549030406072		13L	-001H	RF
		42C	-090G	001
D2549030406400		42A	-001E	RF
D2549030406464		05F	-001D	RF
		42A	-030C	001
		42C	-030C	001
		42D	-030D	001
		42E	-030E	001
		42G	030A	001
		42H	-030C	001
		42J	-030E	001
		42K	-030E	001
		42L	030A	001
		42N	-030B	001
		42Q	030A	001
		42R	-030G	001
		42S	-030C	001
		42T	-030E	001
		42U	-030E	001
D2549030406466		07T	-001D	RF
		42A	-050E	001
		42E	-050D	001
		42	-050K	001
D2549030406600		42E	-001E	RF
D2549030406665		41W	-040J	001
		42E	-040E	001

- ITEM NOT ILLUSTRATED

ALPHA/NUMERIC INDEX

PART NUMBER	AIRLINE STOCK NUMBER	FIG NUMBER	ITEM NUMBER	TOTAL REQ'D
		48C	-001L	RF
D2549030406666		07V	-001M	RF
		42E	-050E	001
D2549030406800		42A	-001H	RF
D2549030406866		07T	-001G	RF
		42A	-050H	001
		42D	050A	001
		42F	-050D	001
D2549030407000		42A	-001G	RF
D2549030407066		07T	-001F	RF
		42A	-050G	001
		42B	-050D	001
D2549030407200		42	-001F	RF
D2549030407264		05G	-001M	RF
		42	-030E	001
D2549030407266		07U	-001B	RF
		42	-050E	001
D2549030407400		42	-001L	RF
D2549030407474		15G	-001N	RF
		42	-110K	001
D2549030407600		42B	-001K	RF
D2549030407800		42G	-001K	RF
D2549030408000		42C	-001E	RF
D2549030408065		42C	-040E	001
		42G	-040E	001
		48B	-001J	RF
D2549030408066		07U	-001L	RF
		42C	-050E	001
		42G	-050E	001
D2549030408200		42D	-001G	RF
D2549030408261		02C	-001K	RF
		42D	-010C	001
		42L	-010B	001
D2549030408263		04A	-001R	RF
		42D	-020B	001

- ITEM NOT ILLUSTRATED

ALPHA/NUMERIC INDEX

PART NUMBER	AIRLINE STOCK NUMBER	FIG NUMBER	ITEM NUMBER	TOTAL REQ'D
		42L	-020B	001
		42N	-020C	001
		42S	-020D	001
		42T	-020E	001
D2549030408264		05J	-001B	RF
		42D	-030F	001
		42L	-030C	001
		42S	-030F	001
D2549030408265		42D	-040G	001
		48C	-001F	RF
D2549030408266		07V	-001F	RF
		42D	-050G	001
D2549030408271		12E	-001M	RF
		42D	-080C	001
D2549030408272		13M	-001B	RF
		42D	-090G	001
D2549030408273		14A	-001G	RF
		42D	-100B	001
		42L	-100B	001
		42N	-100C	001
		42S	-100D	001
		42T	-100E	001
D2549030408274		15D	-001E	RF
		42D	-110E	001
		42L	-110D	001
D2549030408278		19F	-001M	RF
		42D	-150C	001
		42L	-150D	001
		42N	-150E	001
		42S	-150E	001
D2549030408279		20B	-001F	RF
		42D	-160C	001
		42L	-160C	001
		42N	-160C	001
		42S	-160E	001

- ITEM NOT ILLUSTRATED

ALPHA/NUMERIC INDEX

PART NUMBER	AIRLINE STOCK NUMBER	FIG NUMBER	ITEM NUMBER	TOTAL REQ'D
		42T	-160E	001
D2549030408280		21B	-001H	RF
		42D	-170B	001
		42L	-170B	001
		42S	-170C	001
D2549030408283		26P	-001D	RF
		42D	-200C	001
		42F	200A	001
		42G	-200E	001
		42K	-200C	001
D2549030408400		42D	-001J	RF
D2549030408465		42D	-040J	001
		48C	-001H	RF
D2549030408466		07V	-001H	RF
		42D	-050J	001
D2549030408600		42G	-001H	RF
D2549030408665		42G	-040H	001
		48G	-001E	RF
D2549030408666		07W	-001L	RF
		42G	-050H	001
D2549030409000		42E	-001K	RF
D2549030409065		42E	-040K	001
		48D	-001H	RF
D2549030409066		07X	-001A	RF
		42E	-050K	001
D2549030409071		12G	-001E	RF
		42E	-080E	001
D2549030409072		13N	-001L	RF
		42E	-090K	001
D2549030409083		26R	-001F	RF
		42E	-200H	001
D2549030409200		42P	-001D	RF
D2549030409400		42H	-001A	RF
D2549030409465		42H	040A	001
		48G	-001K	RF

- ITEM NOT ILLUSTRATED

ALPHA/NUMERIC INDEX

PART NUMBER	AIRLINE STOCK NUMBER	FIG NUMBER	ITEM NUMBER	TOTAL REQ'D
D2549030409466		07X	-001G	RF
		42H	050A	001
D2549030409471		12G	-001H	RF
		42H	080A	001
D2549030409472		13P	-001B	RF
		42H	090A	001
		42M	-090B	001
D2549030409600		42G	-001B	RF
D2549030409663		04A	-001U	RF
		41M	-020D	001
		42G	-020B	001
		42N	-020B	001
		42Q	-020B	001
		42R	020A	001
		42S	-020B	001
		42U	-020C	001
D2549030409664		05H	-001H	RF
		42G	-030B	001
D2549030409665		42G	-040B	001
		42N	-040D	001
		42S	-040G	001
		48G	-001B	RF
D2549030409666		07W	-001E	RF
		42G	-050B	001
		42N	-050D	001
		42S	-050E	001
D2549030409672		13N	-001F	RF
		42E	-090J	001
		42G	-090B	001
		42H	-090D	001
		42K	-090F	001
		42L	-090C	001
		42M	090A	001
		42N	-090C	001
		42P	-090C	001

- ITEM NOT ILLUSTRATED

ALPHA/NUMERIC INDEX

PART NUMBER	AIRLINE STOCK NUMBER	FIG NUMBER	ITEM NUMBER	TOTAL REQ'D
		42Q	090A	001
		42S	-090F	001
		42T	-090F	001
		42U	-090G	001
D2549030409673		14B	-001A	RF
		42G	-100B	001
D2549030409674		15L	-001H	RF
		42G	-110B	001
		42N	-110D	001
D2549030409676		17D	-001L	RF
		42G	-130B	001
		42N	-130D	001
		42S	-130D	001
D2549030409678		19H	-001D	RF
		42G	-150B	001
		42N	-150C	001
		42S	-150D	001
D2549030409683		1	-200J	001
		26S	-001A	RF
		26	-001P	RF
		42G	-200B	001
		42K	-200F	001
D2549030409800		42D	-001M	RF
D2549030409865		42D	-040M	001
		42G	-040K	001
		48D	-001B	RF
D2549030409866		07V	-001J	RF
		42D	-050K	001
D2549030410000		42F	-001M	RF
D2549030410065		42F	-040L	001
		42H	-040B	001
		48G	-001A	RF
D2549030410066		07W	-001D	RF
		42F	-050K	001
		42H	-050D	001

- ITEM NOT ILLUSTRATED

ALPHA/NUMERIC INDEX

PART NUMBER	AIRLINE STOCK NUMBER	FIG NUMBER	ITEM NUMBER	TOTAL REQ'D
		42U	-050H	001
D2549030410071		12G	-001C	RF
		42F	-080F	001
		42G	-080D	001
		42H	-080B	001
		42J	080A	001
		42L	-080E	001
		42M	-080B	001
		42P	-080C	001
		42Q	-080D	001
		42T	-080D	001
D2549030410072		13N	-001D	RF
		42F	-090K	001
		42G	-090L	001
		42H	-090B	001
		42K	-090D	001
		42Q	-090E	001
		42S	-090C	001
D2549030410074		15L	-001F	RF
		42F	-110J	001
		42G	-110K	001
		42H	-110B	001
			-110E	001
		42J	110A	001
		42K	-110C	001
		42L	110A	001
		42M	-110B	001
		42N	-110C	001
		42P	-110D	001
		42Q	110A	001
		42R	110A	001
D2549030410081		22G	-001E	RF
		42B	-180D	001
		42E	-180D	001
		42F	-180D	001

- ITEM NOT ILLUSTRATED

ALPHA/NUMERIC INDEX

PART NUMBER	AIRLINE STOCK NUMBER	FIG NUMBER	ITEM NUMBER	TOTAL REQ'D
		42H	-180B	001
		42K	-180B	001
		42L	-180B	001
		42N	-180C	001
		42Q	-180C	001
		42R	-180B	001
		42T	-180B	001
D2549030410200		42F	-001K	RF
D2549030410261		02C	-001M	RF
		42F	-010C	001
		42G	-010B	001
		42H	010A	001
D2549030410263		04A	-001T	RF
		42F	-020B	001
		42G	-020D	001
		42H	020A	001
		42R	-020B	001
		42T	-020B	001
D2549030410264		05F	-001E	RF
		42F	-030C	001
		42R	030A	001
		42T	-030B	001
		42U	-030C	001
D2549030410265		42F	-040J	001
		48F	-001A	RF
D2549030410266		07W	-001B	RF
		42F	-050H	001
		42T	-050B	001
D2549030410272		13N	-001B	RF
		42F	-090H	001
		42L	-090D	001
		42N	-090E	001
		42S	-090G	001
		42T	-090B	001
D2549030410274		15L	-001C	RF

- ITEM NOT ILLUSTRATED

ALPHA/NUMERIC INDEX

PART NUMBER	AIRLINE STOCK NUMBER	FIG NUMBER	ITEM NUMBER	TOTAL REQ'D
		42E	-110J	001
		42F	-110G	001
		42T	-110B	001
D2549030410278		19H	-001C	RF
		42F	-150D	001
D2549030410283		26R	-001A	RF
		42E	-200F	001
		42F	-200D	001
		42G	200A	001
		42H	-200B	001
		42J	200A	001
		42K	-200B	001
		42L	200A	001
		42M	200A	001
		42N	-200C	001
		42P	200A	001
		42Q	-200D	001
		42R	-200C	001
		42S	-200C	001
		42T	-200B	001
		42U	-200C	001
D2549030410400		42G	-001E	RF
D2549030410600		42K	-001B	RF
D2549030410665		42K	-040B	001
		48H	-001D	RF
D2549030410666		07Z	-001D	RF
		42K	-050B	001
D2549030410671		12G	-001K	RF
		42K	-080B	001
		42L	-080F	001
		42R	-080B	001
		42T	-080C	001
D2549030410672		13P	-001M	RF
		42K	-090B	001
D2549030410800		42K	-001H	RF

- ITEM NOT ILLUSTRATED

ALPHA/NUMERIC INDEX

PART NUMBER	AIRLINE STOCK NUMBER	FIG NUMBER	ITEM NUMBER	TOTAL REQ'D
D2549030410861		02D	-001E	RF
		42K	-010D	001
		42L	-010D	001
		42R	-010B	001
		42T	-010D	001
D2549030410863		04A	-001W	RF
		42K	-020C	001
		42L	-020C	001
		42T	-020D	001
D2549030410865		42K	-040H	001
		42L	-040L	001
		42R	-040C	001
		42T	-040G	001
		48A	-001E	RF
D2549030410866		07Z	-001G	RF
		42K	-050H	001
		42L	-050H	001
D2549030410872		13Q	-001B	RF
		42K	-090H	001
		42L	-090H	001
		42R	-090B	001
		42T	-090G	001
D2549030410873		14B	-001B	RF
		42K	-100C	001
D2549030411200		42K	-001L	RF
D2549030411400		42H	-001L	RF
D2549030411465		42H	-040K	001
		42L	040A	001
		48D	-001M	RF
D2549030411472		13P	-001H	RF
		42H	-090K	001
		42L	090A	001
		42Q	-090J	001
		42U	-090F	001
D2549030411600		42L	-001J	RF

- ITEM NOT ILLUSTRATED

ALPHA/NUMERIC INDEX

PART NUMBER	AIRLINE STOCK NUMBER	FIG NUMBER	ITEM NUMBER	TOTAL REQ'D
D2549030411665		42L	-040J	001
		48J	-001C	RF
D2549030411672		01Q	090A	001
		01S	-090J	001
		01V	-090C	001
		01W	-090B	001
		01Z	-090F	001
		13R	-001A	RF
		41B	-090C	001
		41D	-090E	001
		41G	-090B	001
		41M	-090K	001
		41N	090A	001
		41W	-090C	001
		42L	-090G	001
		42N	-090G	001
		42T	-090C	001
D2549030411800		42L	-001C	RF
D2549030411865		42L	-040C	001
		42T	-040K	001
		48J	-001B	RF
D2549030411874		15L	-001N	RF
		42L	-110C	001
D2549030412000		42J	-001E	RF
D2549030412200		42L	-001D	RF
D2549030412265		42L	-040D	001
		42S	-040J	001
		48H	-001K	RF
D2549030412266		07Z	-001L	RF
		42L	-050D	001
		42S	-050H	001
D2549030412271		12H	-001A	RF
		42L	-080C	001
		42N	-080D	001
		42S	-080E	001

- ITEM NOT ILLUSTRATED

ALPHA/NUMERIC INDEX

PART NUMBER	AIRLINE STOCK NUMBER	FIG NUMBER	ITEM NUMBER	TOTAL REQ'D
		42T	-080E	001
D2549030412283		26R	-001H	RF
		42L	-200B	001
		42S	-200F	001
D2549030412400		42L	-001A	RF
D2549030412471		12G	-001M	RF
		42H	-080F	001
		42L	080A	001
		42Q	-080F	001
		42U	-080F	001
D2549030412600		42L	-001F	RF
D2549030412665		42L	-040F	001
		42M	-040H	001
		48H	-001M	RF
D2549030412800		42L	-001H	RF
D2549030412865		42L	-040H	001
		42T	-040M	001
		48K	-001C	RF
D2549030413000		42M	-001G	RF
D2549030413065		42M	-040G	001
		42R	-040J	001
		48K	-001J	RF
D2549030413072		13Q	-001K	RF
		42M	-090E	001
		42R	-090F	001
D2549030413083		26F	-001D	RF
		26U	-001B	RF
		41F	-200C	001
		42M	-200D	001
		42N	-200G	001
		42Q	-200E	001
		42R	-200D	001
		42S	-200E	001
D2549030413200		42M	-001J	RF
D2549030413400		42N	-001F	RF

- ITEM NOT ILLUSTRATED

ALPHA/NUMERIC INDEX

PART NUMBER	AIRLINE STOCK NUMBER	FIG NUMBER	ITEM NUMBER	TOTAL REQ'D
D2549030413461		02D	-001G	RF
		42N	-010E	001
		42S	-010E	001
		42T	-010E	001
D2549030413464		05H	-001J	RF
		42N	-030F	001
		42T	-030F	001
D2549030413465		42N	-040F	001
		42T	-040L	001
		48L	-001D	RF
D2549030413466		42N	-050F	001
		42T	-050L	001
		49	-001E	RF
D2549030413474		15D	-001F	RF
		42N	-110F	001
D2549030413476		17E	-001A	RF
		42N	-130E	001
		42T	-130E	001
D2549030413480		21B	-001J	RF
		42N	-170C	001
		42T	-170D	001
D2549030413483		01P	-200D	001
		26C	-001P	RF
		26R	-001M	RF
		42N	-200F	001
		42T	-200G	001
D2549030413600		42J	-001L	RF
D2549030413665		42J	-040G	001
		48L	-001B	RF
D2549030414000		42N	-001D	RF
D2549030414061		02B	-001K	RF
		42N	-010D	001
		42Q	-010B	001
		42R	010A	001
		42S	-010C	001

- ITEM NOT ILLUSTRATED

ALPHA/NUMERIC INDEX

PART NUMBER	AIRLINE STOCK NUMBER	FIG NUMBER	ITEM NUMBER	TOTAL REQ'D
		42T	-010B	001
		42U	-010B	001
D2549030414200		42L	-001L	RF
D2549030414273		14A	-001J	RF
		42L	-100C	001
		42R	-100C	001
		42T	-100D	001
D2549030414283		26U	-001A	RF
		42L	-200D	001
		42M	-200B	001
		42N	-200D	001
		42P	-200C	001
		42Q	-200C	001
		42R	200A	001
		42S	-200B	001
		42T	-200C	001
		42U	200A	001
D2549030414400		42N	-001H	RF
D2549030414465		42N	-040H	001
		48L	-001F	RF
D2549030414600		42N	-001G	RF
D2549030414661		02D	-001H	RF
		42N	-010F	001
		42S	-010D	001
D2549030414664		05F	-001G	RF
		42N	-030G	001
		42S	-030E	001
D2549030414665		42N	-040G	001
		42S	-040H	001
		48L	-001E	RF
D2549030414666		42N	-050G	001
		42S	-050G	001
		49	-001F	RF
D2549030414671		12J	-001A	RF
		42N	-080E	001

- ITEM NOT ILLUSTRATED

ALPHA/NUMERIC INDEX

PART NUMBER	AIRLINE STOCK NUMBER	FIG NUMBER	ITEM NUMBER	TOTAL REQ'D
		42S	-080D	001
D2549030414673		14A	-001H	RF
		42N	-100B	001
		42Q	-100B	001
		42R	100A	001
		42S	-100C	001
		42U	-100C	001
D2549030414674		15M	-001E	RF
		42N	-110G	001
D2549030414675		16B	-001L	RF
		42N	-120F	001
		42S	-120D	001
D2549030414676		17E	-001B	RF
		42N	-130F	001
		42S	-130E	001
D2549030414679		20B	-001G	RF
		42N	-160D	001
		42S	-160D	001
D2549030414800		42N	-001J	RF
D2549030414865		42N	-040J	001
		48J	-001E	RF
D2549030500200		01K	-001M	RF
		1	-001M	RF
			-001P	RF
D2549030500265		01E	-040B	001
		01G	-040J	001
		01K	-040M	001
		06A	-001A	RF
		1	-040J	001
		48E	-001E	RF
D2549030500266		01E	-050B	001
		07A	-001C	RF
		1	-050F	001
D2549030500282		01A	-190B	001
		01B	-190B	001

- ITEM NOT ILLUSTRATED

ALPHA/NUMERIC INDEX

PART NUMBER	AIRLINE STOCK NUMBER	FIG NUMBER	ITEM NUMBER	TOTAL REQ'D
		01C	-190D	001
			190A	001
		01D	-190D	001
		01E	-190B	001
			-190C	001
		01F	-190E	001
			190A	001
		01G	-190B	001
		01H	-190C	001
		01J	-190C	001
		01K	-190D	001
		01L	-190D	001
		01M	-190D	001
		01N	-190C	001
		1	-190B	001
		23	-001B	RF
			-001G	RF
			-001H	RF
D2549030500400		01B	-001F	RF
D2549030500472		01B	-090D	001
		01D	-090F	001
		13A	-001A	RF
D2549030500483		01A	-200K	001
		01B	-200E	001
		01C	200A	001
		01D	-200C	001
		01E	200A	001
		01F	200A	001
		01G	-200B	001
		01H	-200F	001
			200A	001
		01J	-200B	001
		01K	-200C	001
		01L	-200B	001
			-200D	001

- ITEM NOT ILLUSTRATED

ALPHA/NUMERIC INDEX

PART NUMBER	AIRLINE STOCK NUMBER	FIG NUMBER	ITEM NUMBER	TOTAL REQ'D
		01M	-200D	001
		01N	-200D	001
		1	-200E	001
		26	-001J	RF
			-001Q	RF
D2549030500600		01C	-001B	RF
D2549030500665		01C	-040B	001
		01E	040A	001
		06B	-001F	RF
D2549030500666		01C	-050B	001
		01E	050A	001
		07A	-001D	RF
D2549030500671		01C	-080B	001
		12	-001G	RF
D2549030500676		01C	-130B	001
		01E	130A	001
		17B	-001A	RF
D2549030500678		01C	-150B	001
		01E	150A	001
		19	-001B	RF
D2549030500800		01C	-001J	RF
			-001P	RF
D2549030500865		01A	-040J	001
			-040M	001
		01C	-040J	001
			-040N	001
		06B	-001E	RF
			-001P	RF
D2549030500866		01A	-050K	001
		01C	-050J	001
		01H	-050F	001
		07A	-001H	RF
D2549030500871		01C	-080G	001
		01D	-080C	001
		12	-001M	RF

- ITEM NOT ILLUSTRATED

ALPHA/NUMERIC INDEX

PART NUMBER	AIRLINE STOCK NUMBER	FIG NUMBER	ITEM NUMBER	TOTAL REQ'D
D2549030500876		01A	-130F	001
		01C	-130E	001
		01H	-130D	001
		17B	-001C	RF
D2549030500881		01A	-180E	001
		01C	-180B	001
		01D	180A	001
		01G	-180C	001
		01H	-180C	001
		22	-001D	RF
D2549030500882		01A	-190C	001
		01C	-190C	001
		01D	-190B	001
		01G	-190E	001
		01H	-190D	001
		23	-001E	RF
D2549030501000		01D	-001C	RF
D2549030501065		01D	-040C	001
		06C	-001B	RF
D2549030501071		01D	-080D	001
		12	-001B	RF
D2549030501200		01D	-001L	RF
D2549030501265		01B	-040F	001
		01D	-040K	001
		06A	-001F	RF
D2549030501271		01D	-080B	001
		12	-001L	RF
D2549030501400		01E	-001A	RF
D2549030501471		01E	080A	001
		12	-001N	RF
D2549030501600		01E	-001B	RF
D2549030501800		01D	-001K	RF
D2549030501864		01D	-030C	001
		01F	-030B	001
		05A	-001C	RF

- ITEM NOT ILLUSTRATED

ALPHA/NUMERIC INDEX

PART NUMBER	AIRLINE STOCK NUMBER	FIG NUMBER	ITEM NUMBER	TOTAL REQ'D
D2549030501865		01D	-040J	001
		06C	-001G	RF
D2549030501866		01D	-050G	001
		01F	-050C	001
		07B	-001B	RF
D2549030501878		01D	-150G	001
		01F	-150C	001
		19D	-001B	RF
D2549030501881		01D	-180C	001
		01F	-180B	001
		22A	-001B	RF
D2549030502000		01H	-001F	RF
			-001P	RF
D2549030502065		01H	-040F	001
			-040P	001
		06B	-001G	RF
			-001Q	RF
D2549030502200		01H	-001C	RF
D2549030502400		01F	-001C	RF
D2549030502465		01F	-040C	001
		06C	-001J	RF
D2549030502471		01D	-080E	001
		01F	-080C	001
		01G	-080C	001
		12A	-001J	RF
D2549030502600		01F	-001H	RF
D2549030502665		01F	-040H	001
		06C	-001K	RF
D2549030502666		01F	-050H	001
		07C	-001B	RF
D2549030502672		01F	-090H	001
		13	-001L	RF
D2549030502674		01F	-110C	001
		01H	-110D	001
			-110E	001

- ITEM NOT ILLUSTRATED

ALPHA/NUMERIC INDEX

PART NUMBER	AIRLINE STOCK NUMBER	FIG NUMBER	ITEM NUMBER	TOTAL REQ'D
			110A	001
		01L	-110F	001
			-110H	001
			-110J	001
		15	-001H	RF
			-001K	RF
			-001L	RF
D2549030502678		01F	-150H	001
		19A	-001E	RF
D2549030502800		01A	-001N	RF
			-001S	RF
D2549030503000		01E	-001N	RF
D2549030503071		01E	-080B	001
		12A	-001M	RF
D2549030503200		01G	-001J	RF
D2549030503400		01F	-001M	RF
D2549030503464		01F	-030D	001
		5	-001C	RF
D2549030503465		01F	-040M	001
		06D	-001F	RF
D2549030503466		01F	-050L	001
		01G	-050D	001
		07Y	-001E	RF
D2549030503478		01D	-150E	001
		01F	-150K	001
		01G	-150B	001
		01H	-150G	001
			-150H	001
			150A	001
		01L	-150E	001
			-150G	001
			-150H	001
		19B	-001K	RF
			-001M	RF
			-001N	RF

- ITEM NOT ILLUSTRATED

ALPHA/NUMERIC INDEX

PART NUMBER	AIRLINE STOCK NUMBER	FIG NUMBER	ITEM NUMBER	TOTAL REQ'D
D2549030503600		01H	-001G	RF
D2549030503665		01H	-040G	001
		06E	-001H	RF
D2549030503800		41K	-001J	RF
D2549030503865		06V	-001A	RF
		41K	-040J	001
D2549030503866		07J	-001K	RF
		41K	-050J	001
D2549030503872		13G	-001B	RF
		41K	-090H	001
D2549030503874		15H	-001G	RF
		41K	-110H	001
		42B	-110F	001
D2549030504000		01J	-001F	RF
			-001Q	RF
D2549030504064		01J	-030C	001
			-030L	001
		5	-001H	RF
			-001S	RF
D2549030504065		01J	-040F	001
			-040Q	001
		06F	-001A	RF
			-001N	RF
D2549030504066		01J	-050F	001
		07D	-001A	RF
D2549030504072		01J	-090F	001
		01K	090A	001
		01L	-090E	001
		01M	-090F	001
		01P	-090F	001
		01Q	-090K	001
		01S	-090D	001
		01T	090A	001
		01U	-090C	001
		01W	-090J	001

- ITEM NOT ILLUSTRATED

ALPHA/NUMERIC INDEX

PART NUMBER	AIRLINE STOCK NUMBER	FIG NUMBER	ITEM NUMBER	TOTAL REQ'D
		01X	-090H	001
		01Y	090A	001
		13B	-001A	RF
		41B	-090D	001
		41D	-090K	001
		41F	-090F	001
		41G	-090F	001
		41H	-090L	001
		41M	-090J	001
		41N	-090J	001
		41R	090A	001
		41	-090C	001
D2549030504075		01J	-120D	001
		01N	-120C	001
		01S	-120C	001
		01T	120A	001
		01V	120A	001
		01Y	-120F	001
		16B	-001C	RF
D2549030504078		01J	-150D	001
		01K	-150C	001
		01M	-150C	001
		01N	150A	001
		01Q	-150G	001
		01R	150A	001
		01T	150A	001
		01W	-150F	001
		01X	-150E	001
		19E	-001C	RF
		41B	-150D	001
		41D	150A	001
		41G	-150E	001
		41H	150A	001
		41J	-150D	001
		41L	-150B	001

- ITEM NOT ILLUSTRATED

ALPHA/NUMERIC INDEX

PART NUMBER	AIRLINE STOCK NUMBER	FIG NUMBER	ITEM NUMBER	TOTAL REQ'D
		41M	-150F	001
		41N	-150B	001
		41P	-150B	001
		41S	-150C	001
		41U	-150C	001
		41V	150A	001
		41Y	-150B	001
		41Z	150A	001
		41	-150B	001
		42A	150A	001
		42B	-150C	001
		42C	150A	001
		42D	150A	001
		42E	-150E	001
		42F	-150B	001
		42G	150A	001
		42H	-150E	001
		42J	-150C	001
		42K	-150C	001
		42L	150A	001
		42M	150A	001
		42N	150A	001
		42P	150A	001
		42Q	-150C	001
		42R	-150C	001
		42S	-150B	001
		42T	-150C	001
		42U	-150D	001
D2549030504081		01J	-180C	001
		01K	-180B	001
		01M	-180B	001
		01Q	180A	001
		01S	-180B	001
		01T	-180D	001
		01U	-180B	001

- ITEM NOT ILLUSTRATED

ALPHA/NUMERIC INDEX

PART NUMBER	AIRLINE STOCK NUMBER	FIG NUMBER	ITEM NUMBER	TOTAL REQ'D
		01V	-180B	001
		01Y	180A	001
		01Z	-180B	001
		22G	-001A	RF
		41B	-180C	001
		41D	-180B	001
D2549030504082		01J	-190E	001
		01M	-190C	001
		01P	-190E	001
		01S	-190C	001
		01T	-190D	001
		01U	-190B	001
		01W	-190E	001
		01X	-190C	001
		01Y	190A	001
		23B	-001E	RF
		41B	-190D	001
		41	-190C	001
D2549030504200		01P	-001M	RF
D2549030504265		01P	-040M	001
		06K	-001F	RF
D2549030504600		01K	-001B	RF
D2549030504665		01K	-040B	001
		06F	-001H	RF
D2549030504666		01K	-050B	001
		07D	-001F	RF
D2549030504671		01K	-080B	001
		12C	-001K	RF
D2549030504672		01K	-090B	001
		01L	-090D	001
		01U	-090G	001
		01X	-090D	001
		13B	-001E	RF
		41C	-090G	001
		41F	-090D	001

- ITEM NOT ILLUSTRATED

ALPHA/NUMERIC INDEX

PART NUMBER	AIRLINE STOCK NUMBER	FIG NUMBER	ITEM NUMBER	TOTAL REQ'D
		41H	-090B	001
D2549030504674		01K	-110B	001
		15D	-001A	RF
D2549030504675		01K	-120B	001
		01U	-120C	001
		01X	-120D	001
		16B	-001H	RF
		41C	-120D	001
		41Z	-120D	001
		42A	-120D	001
		42H	-120F	001
		42L	120A	001
		42Q	-120F	001
		42U	-120F	001
D2549030504676		01K	-130B	001
		01U	-130D	001
		01X	-130D	001
		17C	-001E	RF
		41C	-130D	001
		41Z	-130C	001
		42A	-130E	001
		42H	-130F	001
		42L	130A	001
		42Q	-130F	001
		42U	-130G	001
D2549030504678		01K	-150B	001
		01U	-150D	001
		01X	-150D	001
		19E	-001H	RF
		41C	-150E	001
D2549030504800		01J	-001A	RF
D2549030504865		01J	040A	001
		06D	-001J	RF
D2549030504866		01J	050A	001
		01S	-050C	001

- ITEM NOT ILLUSTRATED

ALPHA/NUMERIC INDEX

PART NUMBER	AIRLINE STOCK NUMBER	FIG NUMBER	ITEM NUMBER	TOTAL REQ'D
		01Z	-050G	001
		07B	-001K	RF
D2549030504874		01J	110A	001
		01L	-110E	001
		01N	-110B	001
		01T	-110G	001
		15C	-001A	RF
D2549030504875		01J	120A	001
		16B	-001A	RF
		41B	-120D	001
D2549030504876		01J	130A	001
		01K	-130C	001
		01L	-130D	001
		01M	130A	001
		01N	-130B	001
		01P	-130E	001
		01Q	-130D	001
		01S	-130B	001
		01T	130A	001
		01U	130A	001
		01V	130A	001
		01W	130A	001
		01X	-130G	001
		01Y	130A	001
		01Z	-130C	001
		17C	-001A	RF
		41A	130A	001
		41B	130A	001
		41C	-130B	001
		41D	130A	001
		41F	-130B	001
		41G	-130C	001
		41H	-130B	001
		41J	130A	001
		41K	-130C	001

- ITEM NOT ILLUSTRATED

ALPHA/NUMERIC INDEX

PART NUMBER	AIRLINE STOCK NUMBER	FIG NUMBER	ITEM NUMBER	TOTAL REQ'D
		41L	-130B	001
		41M	-130C	001
		41N	-130D	001
		41P	130A	001
		41Q	140A	001
		41R	-130B	001
		41S	-130B	001
		41T	-130B	001
		41U	-130B	001
		41V	130A	001
		41W	-130E	001
		41X	-130B	001
		41Y	-130B	001
		41Z	130A	001
		41	-130B	001
		42A	-130D	001
		42B	-130C	001
		42C	-130C	001
		42D	130A	001
		42E	-130D	001
		42F	130A	001
		42G	130A	001
		42H	-130D	001
		42J	-130B	001
		42K	130A	001
		42L	-130B	001
		42M	-130C	001
		42N	130A	001
		42P	-130B	001
		42Q	130A	001
		42R	-130B	001
		42S	-130C	001
		42T	-130B	001
		42U	130A	001
		42	-130C	001

- ITEM NOT ILLUSTRATED

ALPHA/NUMERIC INDEX

PART NUMBER	AIRLINE STOCK NUMBER	FIG NUMBER	ITEM NUMBER	TOTAL REQ'D
D2549030504877		01J	140A	001
		01K	140A	001
		01L	140A	001
		01M	140A	001
		01N	140A	001
		01P	-140B	001
		01Q	140A	001
		01R	140A	001
		01S	-140B	001
		01T	140A	001
		01U	-140A	001
		01V	140A	001
		01W	-140A	001
		01X	140A	001
		01Y	140A	001
		01Z	140A	001
		18	-001G	RF
		41A	140A	001
		41B	140A	001
		41C	140A	001
		41D	140A	001
		41F	140A	001
		41G	140A	001
		41H	140A	001
		41J	140A	001
		41K	140A	001
		41L	140A	001
		41M	140A	001
		41N	140A	001
		41P	140A	001
		41Q	150A	001
		41R	140A	001
		41S	140A	001
		41T	140A	001
		41U	140A	001

- ITEM NOT ILLUSTRATED

ALPHA/NUMERIC INDEX

PART NUMBER	AIRLINE STOCK NUMBER	FIG NUMBER	ITEM NUMBER	TOTAL REQ'D
D2549030504878		41V	140A	001
		41W	140A	001
		41X	-140B	001
		41Y	140A	001
		41	140A	001
		42D	140A	001
		42Q	-140B	001
		42U	-140B	001
		01J	150A	001
		01K	-150E	001
		01L	-150B	001
			-150J	001
		01M	-150B	001
		01N	-150D	001
		01P	-150C	001
		01Q	-150E	001
		01S	-150C	001
		01T	-150B	001
		01U	-150B	001
		01V	-150D	001
		01W	150A	001
		01X	-150B	001
		01Y	150A	001
		01Z	150A	001
		19E	-001A	RF
			-001S	RF
			-001U	RF
		41A	-150C	001
		41B	-150E	001
		41C	-150B	001
		41D	-150B	001
		41F	-150C	001
		41G	-150C	001
		41H	-150C	001
		41J	150A	001

- ITEM NOT ILLUSTRATED

ALPHA/NUMERIC INDEX

PART NUMBER	AIRLINE STOCK NUMBER	FIG NUMBER	ITEM NUMBER	TOTAL REQ'D
		41K	150A	001
		41L	150A	001
		41M	150A	001
		41N	-150F	001
		41P	150A	001
		41Q	160A	001
		41R	-150B	001
			-150E	001
		41S	150A	001
		41T	150A	001
		41U	150A	001
		41V	-150B	001
		41W	150A	001
		41X	150A	001
		41Y	150A	001
		41Z	-150B	001
		41	-150G	001
			150A	001
		42A	-150B	001
		42B	150A	001
		42C	-150B	001
		42D	-150B	001
			-150E	001
		42E	-150B	001
		42F	150A	001
		42G	-150C	001
		42H	-150B	001
		42J	150A	001
		42K	-150E	001
			150A	001
		42L	-150B	001
		42M	-150B	001
			-150D	001
		42N	-150B	001
		42P	-150C	001

- ITEM NOT ILLUSTRATED

ALPHA/NUMERIC INDEX

PART NUMBER	AIRLINE STOCK NUMBER	FIG NUMBER	ITEM NUMBER	TOTAL REQ'D
		42Q	150A	001
		42R	-150D	001
		42S	150A	001
		42T	-150H	001
			150A	001
		42U	150A	001
		42	-150C	001
D2549030504880		01J	170A	001
		01K	-170B	001
		01L	170A	001
		01M	170A	001
		01N	170A	001
		01P	-170B	001
		01Q	-170C	001
		01R	170A	001
		01T	170A	001
		21	-001E	RF
		41B	-170D	001
		41F	-170D	001
		41	-170D	001
D2549030504881		01J	180A	001
		01K	180A	001
		01L	180A	001
		01M	180A	001
		01N	180A	001
		01P	-180C	001
		01Q	-180B	001
		01R	180A	001
		01S	180A	001
		01T	180A	001
		01U	180A	001
		01V	180A	001
		01W	180A	001
		01X	180A	001
		01Y	-180C	001

- ITEM NOT ILLUSTRATED

ALPHA/NUMERIC INDEX

PART NUMBER	AIRLINE STOCK NUMBER	FIG NUMBER	ITEM NUMBER	TOTAL REQ'D
D2549030504882		01Z	180A	001
		22D	-001A	RF
		41A	180A	001
		41B	180A	001
		41C	180A	001
		41D	180A	001
		41F	180A	001
		41	180A	001
		01J	190A	001
		01L	-190B	001
		01N	-190B	001
		01P	-190C	001
		01Q	-190E	001
		01S	190A	001
		01T	190A	001
		01V	190A	001
		01W	190A	001
		01X	-190B	001
		01Y	-190D	001
		01Z	-190B	001
		23B	-001A	RF
		41A	190A	001
		41B	-190F	001
		41C	-190B	001
		41D	-190B	001
		41F	-190B	001
		41G	-190C	001
		41H	-190B	001
		41J	-190B	001
		41K	-190B	001
		41M	-190C	001
		41N	-190D	001
		41P	-190B	001
		41R	-190C	001
		41S	-190B	001

- ITEM NOT ILLUSTRATED

ALPHA/NUMERIC INDEX

PART NUMBER	AIRLINE STOCK NUMBER	FIG NUMBER	ITEM NUMBER	TOTAL REQ'D
D2549030504883		41T	-190C	001
		41U	190A	001
		41V	-190C	001
		41X	190A	001
		41Y	-190C	001
		41Z	-190C	001
		41	-190B	001
		42B	190A	001
		42D	-190C	001
		42E	-190D	001
		42F	-190B	001
		42G	190A	001
		42H	190A	001
		42J	-190B	001
		42K	-190D	001
		42L	-190C	001
		42M	-190C	001
		42N	-190E	001
		42P	190A	001
		42Q	-190B	001
		42T	-190B	001
		42U	-190B	001
		01J	200A	001
		01K	200A	001
		01L	200A	001
		01M	200A	001
		01N	200A	001
		01P	-200B	001
		01Q	200A	001
		01R	200A	001
		01S	-200B	001
		01T	200A	001
		01U	200A	001
		01V	-200B	001
		01W	-200B	001

- ITEM NOT ILLUSTRATED

ALPHA/NUMERIC INDEX

PART NUMBER	AIRLINE STOCK NUMBER	FIG NUMBER	ITEM NUMBER	TOTAL REQ'D
		01X	-200B	001
		26C	-001A	RF
		41B	200A	001
		41	-200F	001
D2549030505200		01J	-001D	RF
D2549030505264		01J	-030B	001
			-030K	001
		01K	-030B	001
		01L	-030C	001
		01M	030A	001
		01N	030A	001
		01P	-030C	001
		5	-001G	RF
			-001R	RF
D2549030505265		01J	-040D	001
		06E	-001M	RF
D2549030505266		01J	-050D	001
		01N	-050C	001
		01S	-050E	001
		01T	-050L	001
		01V	050A	001
		07B	-001E	RF
		41A	050A	001
		41	-050G	001
D2549030505272		01Q	-090J	001
		01T	-090C	001
		01X	-090B	001
		01Z	-090C	001
		13A	-001C	RF
		41D	-090C	001
D2549030505278		01J	-150C	001
		01N	-150B	001
		01S	-150E	001
		01T	-150E	001
		01V	-150G	001

- ITEM NOT ILLUSTRATED

ALPHA/NUMERIC INDEX

PART NUMBER	AIRLINE STOCK NUMBER	FIG NUMBER	ITEM NUMBER	TOTAL REQ'D
		19E	-001B	RF
		41A	150A	001
		41J	-150E	001
		41S	-150B	001
		41T	-150C	001
		41U	-150B	001
		41	-150D	001
		42C	-150C	001
		42F	-150C	001
		42H	-150D	001
		42L	-150C	001
		42T	-150F	001
		42U	-150E	001
D2549030505400		01J	-001J	RF
D2549030505464		01J	-030E	001
		01P	030A	001
		05A	-001F	RF
D2549030505465		01J	-040J	001
		06C	-001N	RF
D2549030505475		01J	-120E	001
		01K	-120D	001
		01M	120A	001
		01P	120A	001
		01Q	-120B	001
		01T	-120D	001
		01V	-120D	001
		01W	-120E	001
		01Y	-120B	001
		16B	-001F	RF
		41B	-120E	001
		41D	-120E	001
		41G	-120D	001
		41H	-120D	001
		41K	-120C	001
		41M	-120D	001

- ITEM NOT ILLUSTRATED

ALPHA/NUMERIC INDEX

PART NUMBER	AIRLINE STOCK NUMBER	FIG NUMBER	ITEM NUMBER	TOTAL REQ'D
		41N	-120C	001
		41T	-120C	001
		41W	-120D	001
		41X	-120E	001
		41	-120B	001
		42E	-120E	001
		42	120A	001
D2549030505478		01J	-150G	001
		01P	150A	001
		01Q	-150D	001
		01Y	-150B	001
		19E	-001F	RF
		41B	-150F	001
		41D	-150F	001
		41G	-150F	001
		41H	-150F	001
		41M	-150C	001
		41N	-150D	001
		41W	-150E	001
		41X	-150D	001
D2549030505481		01J	-180F	001
		01P	180A	001
		01Q	-180C	001
		22E	-001B	RF
D2549030505600		01K	-001A	RF
D2549030505661		01K	010A	001
		01P	-010C	001
		2	-001F	RF
D2549030505663		01K	020A	001
		01P	-020C	001
		01X	-020C	001
		01Y	-020E	001
		41G	020A	001
		41N	-020E	001
		41R	020A	001

- ITEM NOT ILLUSTRATED

ALPHA/NUMERIC INDEX

PART NUMBER	AIRLINE STOCK NUMBER	FIG NUMBER	ITEM NUMBER	TOTAL REQ'D
		4	-001F	RF
D2549030505664		01K	030A	001
		01P	-030E	001
		5	-001K	RF
D2549030505665		01K	040A	001
		06F	-001G	RF
D2549030505666		01K	050A	001
		01P	-050G	001
		01Y	-050H	001
		07D	-001E	RF
D2549030505673		01K	100A	001
		01P	-100C	001
		14	-001F	RF
D2549030505678		01K	150A	001
		01P	-150F	001
		01Y	-150F	001
		19E	-001G	RF
		41G	150A	001
		41R	150A	001
D2549030505679		01K	160A	001
		01P	-160C	001
		20	-001E	RF
D2549030505680		01K	170A	001
		01P	-170D	001
		21	-001H	RF
D2549030505800		01J	-001M	RF
D2549030505865		01J	-040M	001
		06G	-001D	RF
D2549030505866		01J	-050K	001
		01M	-050F	001
		01P	-050F	001
		01S	-050B	001
		01T	-050M	001
		01V	-050F	001
		01W	-050G	001

- ITEM NOT ILLUSTRATED

ALPHA/NUMERIC INDEX

PART NUMBER	AIRLINE STOCK NUMBER	FIG NUMBER	ITEM NUMBER	TOTAL REQ'D
		01Z	-050C	001
		07D	-001L	RF
		41B	-050K	001
		41C	-050C	001
		41G	-050D	001
		41H	-050D	001
D2549030505872		01J	-090K	001
		13B	-001J	RF
D2549030505878		01J	-150H	001
		01M	150A	001
		01P	-150E	001
		01S	-150B	001
		01T	-150F	001
		01U	150A	001
		01V	150A	001
		01W	-150E	001
		01Z	-150B	001
		19E	-001M	RF
		41B	-150H	001
		41C	-150C	001
		41G	-150D	001
		41H	-150D	001
		41M	-150B	001
		41N	-150E	001
		41X	-150E	001
		42E	-150C	001
		42P	-150B	001
D2549030506000		41B	-001C	RF
D2549030506061		01Q	010A	001
		01S	-010D	001
		01V	-010G	001
		2	-001G	RF
		41B	-010C	001
D2549030506063		01Q	020A	001
		01V	-020C	001

- ITEM NOT ILLUSTRATED

ALPHA/NUMERIC INDEX

PART NUMBER	AIRLINE STOCK NUMBER	FIG NUMBER	ITEM NUMBER	TOTAL REQ'D
		01W	-020B	001
		01Z	-020C	001
		41B	-020C	001
		41D	-020B	001
		41G	-020B	001
		41M	-020C	001
		41N	020A	001
		41W	-020C	001
		4	-001G	RF
D2549030506064		41B	-030C	001
		5	-001L	RF
D2549030506065		06F	-001K	RF
		41B	-040C	001
D2549030506066		01Q	050A	001
		01S	-050K	001
		01V	-050C	001
		01W	-050B	001
		01Z	-050E	001
		07C	-001G	RF
		41B	-050C	001
		41D	-050E	001
		41G	-050B	001
		41M	-050L	001
D2549030506071		01Q	080A	001
		01S	-080D	001
		01V	-080B	001
		01W	-080B	001
		01Z	-080D	001
		12C	-001A	RF
		41B	-080C	001
		41D	-080D	001
		41G	-080B	001
D2549030506073		14	-001G	RF
		41B	-100C	001
D2549030506074		15C	-001G	RF

- ITEM NOT ILLUSTRATED

ALPHA/NUMERIC INDEX

PART NUMBER	AIRLINE STOCK NUMBER	FIG NUMBER	ITEM NUMBER	TOTAL REQ'D
		41A	-110B	001
		41B	-110C	001
		41J	-110B	001
		41K	-110J	001
		41N	-110H	001
		41T	-110D	001
		41U	110A	001
		41V	-110D	001
		41Y	-110C	001
		41	-110B	001
D2549030506075		01Q	120A	001
		01S	-120E	001
		01V	-120C	001
		01W	-120B	001
		01Z	-120D	001
		16B	-001J	RF
		41B	-120C	001
		41D	-120D	001
		41G	-120B	001
		41M	-120E	001
		41N	120A	001
		41W	-120C	001
		42D	-120F	001
		42L	-120C	001
		42N	-120E	001
		42S	-120E	001
		42T	-120F	001
D2549030506076		01Q	130A	001
		01S	-130E	001
		01V	-130B	001
		01W	-130B	001
		01Z	-130D	001
		17C	-001F	RF
		41B	-130C	001
		41D	-130D	001

- ITEM NOT ILLUSTRATED

ALPHA/NUMERIC INDEX

PART NUMBER	AIRLINE STOCK NUMBER	FIG NUMBER	ITEM NUMBER	TOTAL REQ'D
		41G	-130B	001
		41M	-130E	001
		41N	130A	001
		41W	-130C	001
		42D	-130E	001
		42L	-130C	001
		42S	-130F	001
D2549030506078		01Q	150A	001
		01S	-150G	001
		01V	-150C	001
		01W	-150B	001
		01Z	-150D	001
		19E	-001K	RF
		41B	-150C	001
		41D	-150C	001
		41G	-150B	001
		41M	-150E	001
		41N	150A	001
		41W	-150C	001
D2549030506080		21	-001J	RF
		41B	-170C	001
D2549030506082		01Q	190A	001
		01S	-190D	001
		01U	-190C	001
		01V	-190C	001
		01Z	-190C	001
		23B	-001D	RF
		41B	-190C	001
		41D	-190C	001
		41G	-190B	001
		41K	-190C	001
D2549030506200		01L	-001E	RF
D2549030506265		01L	-040E	001
		06G	-001J	RF
D2549030506266		01L	-050C	001

- ITEM NOT ILLUSTRATED

ALPHA/NUMERIC INDEX

PART NUMBER	AIRLINE STOCK NUMBER	FIG NUMBER	ITEM NUMBER	TOTAL REQ'D
		01M	-050B	001
		01U	-050B	001
		07E	-001A	RF
D2549030506271		01L	-080C	001
		01M	-080B	001
		01Q	-080G	001
		01U	-080B	001
		01X	-080B	001
		01Z	-080B	001
		12C	-001G	RF
		41D	-080C	001
		41K	-080B	001
D2549030506272		01J	090A	001
		01L	-090C	001
		01M	090A	001
		01P	-090B	001
		01S	-090C	001
		01U	090A	001
		01Z	-090H	001
		13B	-001L	RF
D2549030506275		01L	-120C	001
		01M	-120B	001
		01Q	-120C	001
		01U	-120B	001
		01X	-120B	001
		01Z	-120B	001
		16C	-001B	RF
		41D	-120C	001
		41K	-120B	001
		41R	-120D	001
		41X	120A	001
		42J	-120C	001
		42N	-120G	001
		42P	120A	001
D2549030506276		01L	-130C	001

- ITEM NOT ILLUSTRATED

ALPHA/NUMERIC INDEX

PART NUMBER	AIRLINE STOCK NUMBER	FIG NUMBER	ITEM NUMBER	TOTAL REQ'D
		01M	-130B	001
		01U	-130B	001
		01X	-130B	001
		01Z	-130B	001
		17C	-001K	RF
		41D	-130C	001
		41K	-130B	001
		41R	-130D	001
		41X	130A	001
		42J	-130E	001
		42N	-130G	001
		42P	130A	001
D2549030506400		01N	-001C	RF
D2549030506465		01N	-040C	001
		06J	-001B	RF
D2549030506600		01P	-001A	RF
D2549030506665		01P	040A	001
		06J	-001L	RF
D2549030506800		01J	-001N	RF
D2549030506865		01J	-040N	001
		01P	-040G	001
		06G	-001E	RF
D2549030507000		01M	-001J	RF
D2549030507065		01M	-040G	001
		06G	-001M	RF
D2549030507072		01M	-090D	001
		01Q	-090E	001
		01W	-090D	001
		01Z	-090J	001
		13C	-001D	RF
		41C	-090C	001
		41G	-090C	001
		41K	-090F	001
		41T	-090B	001
D2549030507083		01M	-200B	001

- ITEM NOT ILLUSTRATED

ALPHA/NUMERIC INDEX

PART NUMBER	AIRLINE STOCK NUMBER	FIG NUMBER	ITEM NUMBER	TOTAL REQ'D
		01Q	-200B	001
		26C	-001E	RF
D2549030507200		01N	-001K	RF
D2549030507261		01N	-010C	001
		01Q	-010E	001
		01X	-010B	001
		2	-001K	RF
D2549030507263		01N	-020C	001
		01Q	-020E	001
		01U	-020C	001
		01X	-020B	001
		01Y	-020D	001
		41C	-020B	001
		41F	020A	001
		41H	-020D	001
		41N	-020D	001
		41W	-020B	001
		4	-001K	RF
D2549030507264		01N	-030F	001
		05B	-001E	RF
D2549030507265		01N	-040J	001
		06J	-001J	RF
D2549030507266		01N	-050E	001
		01Q	-050H	001
		01U	-050K	001
		01X	-050C	001
		01Y	-050F	001
		07E	-001K	RF
		41C	-050E	001
		41F	050A	001
D2549030507271		01N	-080D	001
		01Q	-080F	001
		01U	-080E	001
		01X	-080C	001
		01Y	-080E	001

- ITEM NOT ILLUSTRATED

ALPHA/NUMERIC INDEX

PART NUMBER	AIRLINE STOCK NUMBER	FIG NUMBER	ITEM NUMBER	TOTAL REQ'D
		12D	-001A	RF
		41C	-080C	001
		41F	080A	001
		41H	-080E	001
D2549030507273		01N	-100C	001
		14	-001L	RF
D2549030507274		01N	-110E	001
		15E	-001A	RF
D2549030507275		01N	-120E	001
		01Q	-120F	001
		01U	-120D	001
		01X	-120C	001
		01Y	-120E	001
		16C	-001C	RF
		41C	-120C	001
		41F	120A	001
		41H	-120E	001
		41N	-120F	001
		41W	-120B	001
		41X	-120C	001
		42	-120B	001
D2549030507276		01N	-130D	001
		01Q	-130E	001
		01U	-130E	001
		01X	-130C	001
		01Y	-130F	001
		17D	-001A	RF
		41C	-130C	001
		41F	130A	001
		41H	-130E	001
		41N	-130F	001
		41W	-130B	001
		41X	-130C	001
		42	-130B	001
D2549030507278		01N	-150F	001

- ITEM NOT ILLUSTRATED

ALPHA/NUMERIC INDEX

PART NUMBER	AIRLINE STOCK NUMBER	FIG NUMBER	ITEM NUMBER	TOTAL REQ'D
		01Q	-150H	001
		01U	-150E	001
		01X	-150C	001
		01Y	-150E	001
		19F	-001G	RF
		41C	-150D	001
		41F	150A	001
		41H	-150G	001
		41N	-150G	001
		41W	-150B	001
		41X	-150B	001
		42	-150B	001
D2549030507279		01N	-160D	001
		20	-001D	RF
D2549030507280		01N	-170C	001
		21	-001M	RF
D2549030507400		01X	-001C	RF
D2549030507600		01S	-001J	RF
D2549030507680		01Q	-170D	001
		01S	-170C	001
		01U	-170B	001
		01V	-170B	001
		01Z	-170B	001
		21A	-001E	RF
		41A	-170C	001
		41D	-170C	001
		41F	-170B	001
		41H	-170B	001
		41J	-170C	001
		41L	-170B	001
D2549030507800		01T	-001D	RF
D2549030507881		01M	-180C	001
		01T	-180B	001
			-180F	001
		01V	-180C	001

- ITEM NOT ILLUSTRATED

ALPHA/NUMERIC INDEX

PART NUMBER	AIRLINE STOCK NUMBER	FIG NUMBER	ITEM NUMBER	TOTAL REQ'D
		01W	-180B	001
		22D	-001B	RF
D2549030508000		01S	-001L	RF
D2549030508065		01S	-040K	001
		06M	-001E	RF
D2549030508083		01S	-200C	001
		01U	-200G	001
		01V	200A	001
		01W	200A	001
		01X	200A	001
		01Y	200A	001
		01Z	200A	001
		26C	-001H	RF
		41	200A	001
D2549030508200		01Q	-001E	RF
D2549030508265		01Q	-040E	001
		06K	-001M	RF
D2549030508274		01Q	-110J	001
		15G	-001C	RF
D2549030508400		01Q	-001A	RF
D2549030508464		01Q	030A	001
		01S	-030E	001
		01V	-030C	001
		01W	-030B	001
		05B	-001G	RF
D2549030508465		01Q	040A	001
		01S	-040L	001
		01V	-040C	001
		01W	-040B	001
		06K	-001G	RF
D2549030508473		01Q	100A	001
		01S	-100D	001
		01V	-100C	001
		01W	-100B	001
		01Z	-100C	001

- ITEM NOT ILLUSTRATED

ALPHA/NUMERIC INDEX

PART NUMBER	AIRLINE STOCK NUMBER	FIG NUMBER	ITEM NUMBER	TOTAL REQ'D
		14	-001M	RF
		41B	-100F	001
		41D	-100B	001
		41G	-100B	001
		41M	-100C	001
		41N	100A	001
		41W	-100C	001
D2549030508479		01Q	160A	001
		01S	-160E	001
		01V	-160C	001
		01W	-160B	001
		01Z	-160D	001
		20A	-001D	RF
		41B	-160C	001
		41D	-160B	001
		41G	-160B	001
		41M	-160D	001
		41N	160A	001
		41W	-160C	001
D2549030508480		01Q	170A	001
		01S	-170D	001
		01V	-170C	001
		01W	-170B	001
		01Z	-170C	001
		21A	-001D	RF
		41B	-170G	001
		41D	-170B	001
		41G	-170B	001
		41M	-170C	001
		41N	170A	001
D2549030508600		01Q	-001J	RF
D2549030508664		01Q	-030F	001
		01U	-030D	001
		01X	-030B	001
		01Y	-030D	001

- ITEM NOT ILLUSTRATED

ALPHA/NUMERIC INDEX

PART NUMBER	AIRLINE STOCK NUMBER	FIG NUMBER	ITEM NUMBER	TOTAL REQ'D
		05B	-001L	RF
		41C	-030B	001
D2549030508665		01Q	-040J	001
		06L	-001E	RF
D2549030508673		01Q	-100E	001
		01U	-100C	001
		01X	-100B	001
		01Y	-100D	001
		14A	-001B	RF
		41C	-100B	001
		41F	100A	001
		41H	-100D	001
		41N	-100D	001
		41W	-100B	001
		41X	-100B	001
		42	-100B	001
D2549030508674		01Q	-110E	001
		01U	-110G	001
		01X	-110C	001
		15F	-001E	RF
D2549030508679		01Q	-160F	001
		01U	-160E	001
		01X	-160C	001
		01Y	-160D	001
		20A	-001G	RF
		41C	-160C	001
		41F	160A	001
		41H	-160E	001
		41N	-160E	001
		41W	-160B	001
		41X	-160B	001
		42	-160B	001
D2549030508680		01Q	-170E	001
		01U	-170C	001
		01X	-170B	001

- ITEM NOT ILLUSTRATED

ALPHA/NUMERIC INDEX

PART NUMBER	AIRLINE STOCK NUMBER	FIG NUMBER	ITEM NUMBER	TOTAL REQ'D
		01Y	-170D	001
		21A	-001G	RF
		41C	-170B	001
		41F	170A	001
		41H	-170D	001
		41N	-170D	001
D2549030508800		01S	-001C	RF
D2549030508865		01S	-040C	001
		06L	-001L	RF
D2549030509000		01Q	-001C	RF
D2549030509065		01W	040A	001
		01X	040A	001
		01Y	-040C	001
		06K	-001J	RF
		41C	040A	001
		41F	-040H	001
		41H	-040G	001
D2549030509066		01R	-050B	001
		01W	-050J	001
		07F	-001A	RF
D2549030509200		01S	-001F	RF
D2549030509265		01S	-040E	001
		01V	040A	001
		06M	-001A	RF
D2549030509400		01Q	-001D	RF
D2549030509464		01Q	-030D	001
		01Y	-030B	001
		05D	-001B	RF
		41B	-030E	001
		41D	-030E	001
		41G	-030E	001
		41H	-030D	001
		41M	-030D	001
D2549030509465		01Q	-040D	001
		06K	-001L	RF

- ITEM NOT ILLUSTRATED

ALPHA/NUMERIC INDEX

PART NUMBER	AIRLINE STOCK NUMBER	FIG NUMBER	ITEM NUMBER	TOTAL REQ'D
D2549030509474		01J	-110D	001
		01P	110A	001
		01Q	-110D	001
		01T	-110F	001
		01V	-110J	001
		01W	-110F	001
		15F	-001C	RF
D2549030509483		01V	-200C	001
		01Y	-200B	001
		26C	-001G	RF
D2549030509600		01T	-001M	RF
D2549030509800		01W	-001D	RF
D2549030509865		01W	-040D	001
		01Z	-040H	001
		06N	-001K	RF
		41C	-040B	001
		41G	-040C	001
		41K	-040F	001
		41M	-040D	001
D2549030509874		01V	-110G	001
		01W	-110D	001
		01Z	-110F	001
		15G	-001E	RF
		41C	-110B	001
		41G	-110C	001
		41J	-110D	001
		41K	-110F	001
		41M	-110D	001
		41R	-110B	001
		41T	-110B	001
		41X	-110J	001
		41Y	-110E	001
			-110F	001
		42A	-110E	001
		42B	-110G	001

- ITEM NOT ILLUSTRATED

ALPHA/NUMERIC INDEX

PART NUMBER	AIRLINE STOCK NUMBER	FIG NUMBER	ITEM NUMBER	TOTAL REQ'D
D2549030509883		01W	-200C	001
		26D	-001A	RF
D2549030510000		01V	-001C	RF
D2549030510061		01V	-010C	001
		01W	-010B	001
		01Z	-010D	001
		02A	-001B	RF
		41B	-010G	001
		41D	-010D	001
D2549030510200		01U	-001M	RF
D2549030510261		01U	-010D	001
		01Y	-010D	001
		02A	-001A	RF
		41C	-010D	001
D2549030510265		01U	-040K	001
		01X	-040C	001
		01Y	-040F	001
		06N	-001H	RF
		41C	-040E	001
		41F	040A	001
		41H	-040J	001
D2549030510400		01Z	-001K	RF
D2549030510465		01Z	-040G	001
		06Q	-001E	RF
D2549030510600		01T	-001F	RF
D2549030510665		01T	-040F	001
		06H	-001M	RF
D2549030510666		01T	-050F	001
		01U	-050D	001
		01Y	050A	001
		07F	-001H	RF
		41G	-050L	001
		41M	-050K	001
D2549030510800		01T	-001G	RF
D2549030510865		01T	-040G	001

- ITEM NOT ILLUSTRATED

ALPHA/NUMERIC INDEX

PART NUMBER	AIRLINE STOCK NUMBER	FIG NUMBER	ITEM NUMBER	TOTAL REQ'D
		01V	-040E	001
		06M	-001H	RF
		41C	-040J	001
		41D	-040L	001
		41H	-040H	001
		41K	-040E	001
D2549030510866		01T	-050G	001
		01V	-050E	001
		07F	-001J	RF
		41C	-050G	001
		41D	-050L	001
		41H	-050G	001
		41K	-050E	001
D2549030510874		01T	-110E	001
		01V	-110C	001
		15G	-001A	RF
D2549030511000		01U	-001F	RF
			-001P	RF
D2549030511065		01U	-040F	001
		01X	-040F	001
		06N	-001D	RF
		41A	-040H	001
		41	-040J	001
D2549030511066		01U	-050F	001
		01X	-050F	001
		07F	-001L	RF
		41A	-050G	001
		41	-050H	001
D2549030511072		01U	-090E	001
		01X	-090F	001
		13C	-001E	RF
		41A	-090H	001
		41P	-090J	001
		41W	090A	001
		41	-090K	001

- ITEM NOT ILLUSTRATED

ALPHA/NUMERIC INDEX

PART NUMBER	AIRLINE STOCK NUMBER	FIG NUMBER	ITEM NUMBER	TOTAL REQ'D
D2549030511076		01U	-130C	001
		01X	-130F	001
		17D	-001E	RF
		41A	-130F	001
		41P	-130F	001
		41W	130A	001
		41	-130F	001
		42A	-130B	001
		42E	-130C	001
		42G	-130F	001
		42J	-130D	001
		42K	-130C	001
		42P	-130D	001
		42Q	-130E	001
		42R	130A	001
		42U	-130D	001
		42	-130E	001
D2549030511183		01U	-200H	001
		26C	-001R	RF
D2549030511200		01U	-001H	RF
D2549030511265		01U	-040G	001
		01V	-040D	001
		06N	-001E	RF
		41F	-040K	001
D2549030511266		01U	-050G	001
		01V	-050K	001
		07G	-001D	RF
		41F	-050H	001
D2549030511272		01U	-090F	001
		01V	-090D	001
		13D	-001C	RF
		41F	-090J	001
		41R	-090K	001
D2549030511274		01U	-110D	001
		01V	-110H	001

- ITEM NOT ILLUSTRATED

ALPHA/NUMERIC INDEX

PART NUMBER	AIRLINE STOCK NUMBER	FIG NUMBER	ITEM NUMBER	TOTAL REQ'D
		15G	-001H	RF
		41R	-110F	001
D2549030511400		01U	-001D	RF
D2549030511465		01U	-040D	001
		06M	-001J	RF
D2549030511600		01U	-001K	RF
D2549030511665		01U	-040J	001
		01Y	-040G	001
		06N	-001G	RF
		41B	-040G	001
D2549030511666		01U	-050J	001
		01Y	-050G	001
		01Z	-050F	001
		07G	-001A	RF
		41A	-050F	001
		41B	-050G	001
		41D	-050F	001
D2549030511671		01U	-080D	001
		01Y	-080F	001
		01Z	-080E	001
		12D	-001F	RF
		41A	-080F	001
		41B	-080D	001
		41D	-080E	001
		41G	-080D	001
D2549030511672		01U	-090H	001
		01Y	-090G	001
		13T	-001A	RF
		41B	-090F	001
D2549030511683		01U	-200E	001
		26C	-001L	RF
D2549030511800		01S	-001K	RF
D2549030511865		01S	-040J	001
		01U	-040E	001
		01V	-040B	001

- ITEM NOT ILLUSTRATED

ALPHA/NUMERIC INDEX

PART NUMBER	AIRLINE STOCK NUMBER	FIG NUMBER	ITEM NUMBER	TOTAL REQ'D
		01Z	-040D	001
		06M	-001D	RF
		41A	-040J	001
		41D	-040G	001
		41H	-040E	001
		41J	-040C	001
D2549030512000		01U	-001G	RF
			-001Q	RF
D2549030512083		01Q	-200C	001
		01U	-200C	001
		26C	-001K	RF
D2549030512183		01U	-200J	001
		26C	-001S	RF
D2549030512200		01U	-001L	RF
D2549030512283		01U	-200F	001
		01W	-200D	001
		01Y	-200D	001
		26C	-001M	RF
D2549030512400		01X	-001E	RF
D2549030512465		01X	-040E	001
		06P	-001E	RF
D2549030512472		01X	-090E	001
		13D	-001J	RF
D2549030512800		01V	-001D	RF
D2549030513000		01V	-001H	RF
D2549030513061		01V	-010D	001
			-010F	001
		02A	-001C	RF
		41B	-010F	001
		41D	-010F	001
D2549030513065		01V	-040G	001
		06P	-001D	RF
D2549030513200		01V	-001B	RF
			-001N	RF
D2549030513261		01V	-010B	001

- ITEM NOT ILLUSTRATED

ALPHA/NUMERIC INDEX

PART NUMBER	AIRLINE STOCK NUMBER	FIG NUMBER	ITEM NUMBER	TOTAL REQ'D
		01Z	-010C	001
		02A	-001E	RF
D2549030513265		01V	-040L	001
		06T	-001M	RF
D2549030513266		01V	-050L	001
		07J	-001N	RF
D2549030513281		01V	-180E	001
		22G	-001D	RF
D2549030513283		01V	-200E	001
		26E	-001G	RF
D2549030513400		01V	-001E	RF
D2549030513600		01V	-001A	RF
D2549030513800		01Y	-001B	RF
D2549030513861		01Y	-010B	001
		02A	-001H	RF
		41B	-010E	001
		41D	-010G	001
D2549030513865		01Y	-040B	001
		06P	-001K	RF
		41B	-040H	001
		41D	-040J	001
		41G	-040H	001
		41H	-040F	001
		41M	-040F	001
D2549030513874		01Y	-110B	001
		15F	-001N	RF
		41B	-110G	001
		41D	-110H	001
		41G	-110F	001
		41H	-110F	001
		41M	-110F	001
		41N	-110D	001
		41W	-110F	001
		41X	-110F	001
D2549030514000		01V	-001G	RF

- ITEM NOT ILLUSTRATED

ALPHA/NUMERIC INDEX

PART NUMBER	AIRLINE STOCK NUMBER	FIG NUMBER	ITEM NUMBER	TOTAL REQ'D
D2549030514072		01V	-090K	001
		01W	-090H	001
		01Z	-090D	001
		13D	-001A	RF
		41C	-090D	001
		41G	-090D	001
		41H	-090D	001
		41N	-090E	001
D2549030514200		01X	-001B	RF
D2549030514265		01X	-040B	001
		01Z	-040B	001
		06P	-001C	RF
		41D	-040C	001
D2549030514400		01W	-001J	RF
D2549030514600		01Y	-001A	RF
			-001N	RF
			-001R	RF
D2549030514661		01Y	010A	001
		01Z	010A	001
		02A	-001G	RF
		41A	010A	001
		41C	010A	001
		41D	-010C	001
		41K	010A	001
		41	010A	001
D2549030514665		01Y	040A	001
		06P	-001J	RF
		41G	-040M	001
		41M	-040K	001
D2549030514674		01X	-110G	001
		01Y	110A	001
		01Z	110A	001
		15G	-001J	RF
		41A	-110G	001
		41C	110A	001

- ITEM NOT ILLUSTRATED

ALPHA/NUMERIC INDEX

PART NUMBER	AIRLINE STOCK NUMBER	FIG NUMBER	ITEM NUMBER	TOTAL REQ'D
		41D	-110D	001
		41F	-110B	001
		41G	-110H	001
		41H	110A	001
		41J	-110E	001
		41K	-110D	001
		41L	-110C	001
		41N	-110F	001
		41P	-110C	001
		41R	110A	001
		41S	-110C	001
		41W	-110G	001
		41X	-110G	001
		41Y	-110G	001
		41Z	110A	001
		41	110A	001
		42A	-110D	001
		42B	-110H	001
		42C	-110B	001
		42D	110A	001
		42E	110A	001
		42F	-110D	001
		42G	-110D	001
		42	-110H	001
D2549030514783		01Y	-200H	001
		26E	-001K	RF
D2549030514800		41	-001K	RF
			-001N	RF
D2549030514861		01Z	-010E	001
		02A	-001L	RF
			-001P	RF
			-001Q	RF
		41A	-010C	001
		41C	-010B	001
		41D	010A	001

- ITEM NOT ILLUSTRATED

ALPHA/NUMERIC INDEX

PART NUMBER	AIRLINE STOCK NUMBER	FIG NUMBER	ITEM NUMBER	TOTAL REQ'D
		41E	010A	001
		41F	-010C	001
		41G	-010C	001
		41H	010A	001
		41J	-010E	001
			010A	001
		41K	-010B	001
		41L	010A	001
		41M	010A	001
		41N	-010B	001
		41P	-010B	001
		41	-010D	001
		42B	-010B	001
		42K	-010C	001
			-010G	001
D2549030514883		26E	-001B	RF
		41	-200D	001
D2549030514983		26E	-001J	RF
		41	-200H	001
D2549030600000		01Y	-001G	RF
D2549030600200		41J	-001E	RF
			-001P	RF
D2549030600265		06T	-001G	RF
			-001P	RF
		41J	-040E	001
			-040L	001
		41L	-040C	001
D2549030600266		07J	-001E	RF
		41J	-050E	001
		41L	-050C	001
D2549030600400		01Z	-001F	RF
			-001N	RF
D2549030600600		01Z	-001D	RF
D2549030600674		01Z	-110B	001
		15H	-001B	RF

- ITEM NOT ILLUSTRATED

ALPHA/NUMERIC INDEX

PART NUMBER	AIRLINE STOCK NUMBER	FIG NUMBER	ITEM NUMBER	TOTAL REQ'D
D2549030600800		01Y	-001F	RF
D2549030600874		01Y	-110D	001
		15G	-001M	RF
		41C	-110D	001
		41F	110A	001
		41H	-110J	001
		41N	-110G	001
		41W	-110B	001
		41X	-110C	001
		42	-110B	001
D2549030601000		41	-001J	RF
D2549030601200		01Z	-001E	RF
D2549030601400		01Z	-001G	RF
D2549030601464		01Z	-030C	001
		05C	-001B	RF
		41B	-030G	001
		41D	-030B	001
		41G	-030B	001
		41M	-030H	001
D2549030601465		01Z	-040E	001
		06Q	-001C	RF
		41B	-040K	001
		41D	-040E	001
		41G	-040B	001
		41M	-040L	001
D2549030601600		41F	-001A	RF
D2549030601664		05C	-001D	RF
		41F	030A	001
		41H	-030E	001
D2549030601800		41D	-001K	RF
D2549030602000		01Z	-001M	RF
D2549030602083		01Z	-200D	001
		26F	-001B	RF
D2549030602200		41D	-001F	RF
D2549030602400		41D	-001G	RF

- ITEM NOT ILLUSTRATED

ALPHA/NUMERIC INDEX

PART NUMBER	AIRLINE STOCK NUMBER	FIG NUMBER	ITEM NUMBER	TOTAL REQ'D
D2549030602465		06R	-001A	RF
		41A	-040G	001
		41D	-040F	001
		41G	-040G	001
D2549030602472		13T	-001B	RF
		41D	-090G	001
		41G	-090G	001
		41P	-090L	001
		41V	-090D	001
		41Y	-090B	001
		42A	-090L	001
		42F	-090L	001
D2549030602483		26G	-001A	RF
		41A	-200D	001
		41D	-200C	001
D2549030602600		41D	-001E	RF
D2549030602800		41D	-001J	RF
D2549030602883		26F	-001C	RF
		41D	-200D	001
D2549030603000		41D	-001H	RF
D2549030603061		02A	-001N	RF
		41D	-010E	001
		41H	-010B	001
		41J	-010C	001
		41L	-010B	001
D2549030603072		13E	-001E	RF
		41A	-090J	001
		41F	-090B	001
		41H	-090E	001
		41J	-090C	001
D2549030603200		41V	-001A	RF
D2549030603264		05G	-001D	RF
		41V	030A	001
		41W	030A	001
		41X	030A	001

- ITEM NOT ILLUSTRATED

ALPHA/NUMERIC INDEX

PART NUMBER	AIRLINE STOCK NUMBER	FIG NUMBER	ITEM NUMBER	TOTAL REQ'D
		41Y	-030B	001
		41Z	030A	001
		42A	030A	001
		42B	-030B	001
		42	-030C	001
D2549030603265		06Y	-001E	RF
		41V	040A	001
D2549030603266		07Q	-001A	RF
		41V	050A	001
D2549030603400		41C	-001L	RF
D2549030603600		41C	-001F	RF
D2549030603800		41B	-001J	RF
D2549030603883		26E	-001D	RF
		41B	-200E	001
D2549030604200		41G	-001A	RF
D2549030604261		02B	-001C	RF
		41G	010A	001
D2549030604266		07G	-001J	RF
		41G	050A	001
D2549030604272		13E	-001H	RF
		41G	090A	001
		41J	-090E	001
		41L	-090C	001
D2549030604400		41B	-001L	RF
D2549030604600		41B	-001H	RF
D2549030604683		01Y	-200E	001
		01Z	-200B	001
		26E	-001C	RF
		41B	-200D	001
		41	-200C	001
D2549030604800		41B	-001K	RF
D2549030604883		01Z	-200E	001
		26E	-001H	RF
		41A	-200F	001
		41B	-200F	001

- ITEM NOT ILLUSTRATED

ALPHA/NUMERIC INDEX

PART NUMBER	AIRLINE STOCK NUMBER	FIG NUMBER	ITEM NUMBER	TOTAL REQ'D
D2549030605000		41C	-001C	RF
D2549030605083		26E	-001F	RF
		41C	-200B	001
D2549030605200		41B	-001M	RF
D2549030605261		02B	-001F	RF
		42	-010E	001
D2549030605283		26F	-001A	RF
		41A	-200C	001
		41B	-200G	001
		41D	-200B	001
		41F	200A	001
D2549030605400		41G	-001D	RF
D2549030605600		41G	-001M	RF
			-001Q	RF
D2549030605800		41D	-001D	RF
D2549030605874		15J	-001A	RF
		41D	-110C	001
		41K	-110B	001
		41R	-110D	001
		41X	110A	001
D2549030606000		41J	-001A	RF
			-001R	RF
D2549030606064		05G	-001K	RF
		41H	-030F	001
		41J	-030G	001
D2549030606065		41H	-040K	001
		41J	040A	001
		48A	-001A	RF
D2549030606066		07G	-001K	RF
		41K	-050D	001
		41N	-050E	001
D2549030606072		13E	-001J	RF
		41H	-090K	001
		41J	090A	001
		41R	-090D	001

- ITEM NOT ILLUSTRATED

ALPHA/NUMERIC INDEX

PART NUMBER	AIRLINE STOCK NUMBER	FIG NUMBER	ITEM NUMBER	TOTAL REQ'D
		41W	-090E	001
D2549030606075		16E	-001A	RF
		41H	-120F	001
		41J	-120E	001
		41X	-120G	001
		41Y	-120D	001
		41Z	-120B	001
		42A	-120E	001
		42B	-120C	001
		42D	-120C	001
		42E	-120D	001
		42F	120A	001
		42G	120A	001
		42H	-120D	001
		42J	-120B	001
		42K	-120C	001
		42L	-120D	001
		42M	-120D	001
		42N	120A	001
		42P	-120D	001
		42Q	-120C	001
		42R	-120C	001
		42S	-120C	001
		42T	-120B	001
		42U	120A	001
		42	-120F	001
D2549030606079		20A	-001N	RF
		41J	160A	001
D2549030606165		41J	-040M	001
		6	-001R	RF
D2549030606166		07R	-001P	RF
		41J	-050L	001
D2549030606200		41G	-001C	RF
D2549030606400		41G	-001G	RF
D2549030606466		07G	-001L	RF

- ITEM NOT ILLUSTRATED

ALPHA/NUMERIC INDEX

PART NUMBER	AIRLINE STOCK NUMBER	FIG NUMBER	ITEM NUMBER	TOTAL REQ'D
		41G	-050F	001
D2549030606483		26J	-001B	RF
		41A	-200G	001
		41G	-200C	001
D2549030606600		41K	-001A	RF
D2549030606800		41K	-001K	RF
D2549030606865		06U	-001B	RF
		41K	-040K	001
D2549030607000		41G	-001J	RF
D2549030607081		22D	-001D	RF
		41G	-180D	001
		41K	-180B	001
		41M	-180E	001
		42B	-180C	001
D2549030607200		41H	-001E	RF
D2549030607266		07J	-001D	RF
		41A	-050H	001
		41H	-050E	001
		41J	-050C	001
		41L	-050F	001
D2549030607400		41G	-001H	RF
D2549030607461		02B	-001E	RF
		41G	-010D	001
		41H	-010C	001
		41K	-010C	001
		41M	-010B	001
D2549030607481		22E	-001C	RF
		41G	-180C	001
		41H	-180C	001
		41M	-180D	001
		41N	-180C	001
		41W	-180D	001
		41X	-180C	001
		42	-180C	001
D2549030607483		26K	-001C	RF

- ITEM NOT ILLUSTRATED

ALPHA/NUMERIC INDEX

PART NUMBER	AIRLINE STOCK NUMBER	FIG NUMBER	ITEM NUMBER	TOTAL REQ'D
		41G	-200D	001
		41H	-200C	001
D2549030607600		41H	-001D	RF
D2549030607800		41H	-001J	RF
D2549030607866		07J	-001B	RF
		41H	-050H	001
D2549030608000		41L	-001K	RF
D2549030608061		41P	-010E	001
D2549030608061		02C	-001C	RF
			-001Q	RF
		41L	-010C	001
		41N	-010D	001
		41P	010A	001
		41Q	010A	001
		41R	-010B	001
		41S	010A	001
		41T	010A	001
		41U	010A	001
		41V	010A	001
		41W	010A	001
		41X	010A	001
		41Y	010A	001
		41Z	010A	001
		42A	010A	001
		42B	010A	001
		42C	-010B	001
		42D	-010B	001
		42F	010A	001
		42	-010C	001
D2549030608064		05C	-001H	RF
		41L	-030D	001
		41P	-030C	001
		41R	-030D	001
		41S	-030C	001
		41T	-030B	001

- ITEM NOT ILLUSTRATED

ALPHA/NUMERIC INDEX

PART NUMBER	AIRLINE STOCK NUMBER	FIG NUMBER	ITEM NUMBER	TOTAL REQ'D
		41U	-030D	001
D2549030608065		06U	-001G	RF
		41L	-040H	001
		41U	-040E	001
D2549030608066		07K	-001F	RF
		41L	-050H	001
		41P	-050C	001
		41S	-050E	001
D2549030608200		41G	-001B	RF
D2549030608261		02B	-001D	RF
		41G	-010B	001
		41M	-010D	001
D2549030608281		22G	-001B	RF
		41G	-180B	001
		41J	-180B	001
		41K	-180C	001
		41L	-180B	001
		41M	-180C	001
		41N	180A	001
		41P	-180B	001
		41Q	190A	001
		41S	-180B	001
		41T	-180B	001
		41U	-180B	001
		41V	-180B	001
		41W	-180C	001
		41X	-180B	001
		41Z	-180B	001
		42A	-180D	001
D2549030608400		41H	-001K	RF
D2549030608466		07R	-001J	RF
		41H	-050J	001
		41J	050A	001
D2549030608600		41K	-001E	RF
D2549030608800		41H	-001F	RF

- ITEM NOT ILLUSTRATED

ALPHA/NUMERIC INDEX

PART NUMBER	AIRLINE STOCK NUMBER	FIG NUMBER	ITEM NUMBER	TOTAL REQ'D
D2549030608872		13E	-001K	RF
		41H	-090F	001
D2549030609000		41L	-001D	RF
D2549030609200		41K	-001F	RF
D2549030609264		05C	-001F	RF
		41J	-030E	001
		41K	-030C	001
		41M	-030C	001
D2549030609800		41S	-001D	RF
D2549030609865		06U	-001L	RF
		41S	-040D	001
D2549030610000		41R	-001D	RF
D2549030610065		06X	-001B	RF
		41R	-040D	001
D2549030610066		07N	-001B	RF
		41R	-050D	001
D2549030610200		41M	-001K	RF
			-001M	RF
			-001N	RF
D2549030610265		06T	-001L	RF
		41M	-040M	001
D2549030610266		07F	-001K	RF
		41M	-050D	001
D2549030610400		41R	-001K	RF
D2549030610465		06W	-001M	RF
		41R	-040K	001
D2549030610466		07N	-001D	RF
		41R	-050H	001
D2549030610600		41M	-001H	RF
D2549030610666		07K	-001D	RF
		41M	-050H	001
D2549030610672		13H	-001L	RF
		41M	-090H	001
		41T	-090C	001
		41W	-090D	001

- ITEM NOT ILLUSTRATED

ALPHA/NUMERIC INDEX

PART NUMBER	AIRLINE STOCK NUMBER	FIG NUMBER	ITEM NUMBER	TOTAL REQ'D
D2549030611000		41R	-001L	RF
D2549030611066		07K	-001G	RF
		41R	-050J	001
D2549030611200		41M	-001F	RF
D2549030611266		07K	-001B	RF
		41M	-050F	001
D2549030611271		12E	-001C	RF
		41M	-080D	001
		41N	-080C	001
		41T	-080C	001
		41W	-080D	001
		41X	-080E	001
		42	080A	001
D2549030611272		13H	-001J	RF
		41M	-090F	001
		41N	-090D	001
		41W	-090F	001
D2549030611400		41M	-001E	RF
D2549030611466		07K	-001A	RF
		41M	-050E	001
D2549030611472		01W	-090G	001
		13H	-001H	RF
		41M	-090E	001
D2549030611483		26M	-001D	RF
		41M	-200D	001
		41W	-200D	001
D2549030611600		41M	-001D	RF
D2549030611672		13H	-001F	RF
		41M	-090D	001
		41R	-090B	001
D2549030611683		26M	-001C	RF
		41M	-200C	001
		41R	-200B	001
		41T	-200B	001
D2549030611800		41L	-001J	RF

- ITEM NOT ILLUSTRATED

ALPHA/NUMERIC INDEX

PART NUMBER	AIRLINE STOCK NUMBER	FIG NUMBER	ITEM NUMBER	TOTAL REQ'D
D2549030611865		06V	-001D	RF
		41L	-040G	001
D2549030612000		41U	-001B	RF
			-001F	RF
D2549030612065		06Y	-001C	RF
		41U	-040B	001
D2549030612066		07N	-001H	RF
		41U	-050B	001
D2549030612165		06Y	-001P	RF
		41U	-040F	001
D2549030612166		07N	-001M	RF
		41U	-050F	001
D2549030612200		41T	-001E	RF
D2549030612265		06Y	-001H	RF
		41T	-040E	001
D2549030612400		41S	-001K	RF
D2549030612465		06Y	-001A	RF
		41S	-040H	001
D2549030612472		13G	-001G	RF
		41S	-090H	001
		41V	-090C	001
D2549030612600		41W	-001E	RF
D2549030612800		41M	-001J	RF
D2549030612861		02C	-001B	RF
		41M	-010C	001
		41N	-010C	001
		41T	-010B	001
		41W	-010D	001
		41X	-010C	001
		42E	-010D	001
		42	010A	001
D2549030612864		05C	-001G	RF
		41M	-030G	001
		41T	-030C	001
D2549030612865		06U	-001F	RF

- ITEM NOT ILLUSTRATED

ALPHA/NUMERIC INDEX

PART NUMBER	AIRLINE STOCK NUMBER	FIG NUMBER	ITEM NUMBER	TOTAL REQ'D
		41M	-040J	001
		41T	-040C	001
D2549030612866		07K	-001E	RF
		41M	-050J	001
		41T	-050C	001
D2549030613200		41N	-001D	RF
D2549030613264		05F	-001A	RF
		41N	-030D	001
D2549030613265		06W	-001A	RF
		41N	-040D	001
D2549030613266		07K	-001L	RF
		41N	-050D	001
D2549030613400		41L	-001L	RF
D2549030613464		05C	-001K	RF
		41L	-030E	001
		41N	-030H	001
		41P	-030B	001
		41R	-030B	001
		41S	-030B	001
		41T	030A	001
		41U	-030C	001
D2549030613465		06U	-001K	RF
		41L	-040J	001
D2549030613466		07K	-001K	RF
		41L	-050J	001
D2549030613600		41W	-001A	RF
			-001P	RF
D2549030613665		06Y	-001J	RF
		41W	040A	001
		42A	-040B	001
		42E	-040C	001
		42	-040G	001
D2549030613666		07Q	-001C	RF
		41W	050A	001
D2549030613783		26N	-001C	RF

- ITEM NOT ILLUSTRATED

ALPHA/NUMERIC INDEX

PART NUMBER	AIRLINE STOCK NUMBER	FIG NUMBER	ITEM NUMBER	TOTAL REQ'D
		41P	-200D	001
		41W	-200G	001
		42A	-200F	001
		42	-200E	001
D2549030613800		41R	-001B	RF
D2549030613865		06W	-001L	RF
		41R	-040B	001
D2549030613866		07L	-001L	RF
		41R	-050B	001
D2549030614000		42B	-001H	RF
D2549030614065		42B	-040H	001
		48B	-001F	RF
D2549030614066		07U	-001D	RF
		42B	-050G	001
D2549030614072		13L	-001B	RF
		42B	-090H	001
D2549030614200		41L	-001G	RF
D2549030614265		06U	-001E	RF
		41L	-040F	001
D2549030614400		41L	-001H	RF
D2549030614600		41P	-001G	RF
D2549030614661		02C	-001E	RF
		41P	-010C	001
D2549030614664		05G	-001C	RF
		41P	030A	001
D2549030614665		06V	-001L	RF
		41P	-040G	001
D2549030614666		07L	-001G	RF
		41P	-050E	001
D2549030614671		12E	-001G	RF
		41P	-080D	001
		42G	-080F	001
D2549030614679		20B	-001C	RF
		41M	-160E	001
		41P	-160C	001

- ITEM NOT ILLUSTRATED

ALPHA/NUMERIC INDEX

PART NUMBER	AIRLINE STOCK NUMBER	FIG NUMBER	ITEM NUMBER	TOTAL REQ'D
		42F	-160C	001
		42G	-160B	001
		42H	160A	001
		42N	-160B	001
		42Q	-160C	001
		42R	160A	001
		42S	-160C	001
		42T	-160B	001
		42U	-160C	001
D2549030614680		21B	-001C	RF
		41P	-170B	001
		41Z	-170B	001
		42F	-170B	001
		42G	-170B	001
		42H	170A	001
		42N	-170B	001
		42Q	-170B	001
		42R	170A	001
		42S	-170B	001
		42T	-170B	001
		42U	-170B	001
D2549030614682		23D	-001A	RF
		41P	-190D	001
		41R	-190D	001
		41X	-190F	001
		42C	-190B	001
		42J	-190D	001
		42K	-190B	001
		42L	-190D	001
		42N	-190C	001
		42R	-190D	001
		42S	-190B	001
D2549030614800		41S	-001G	RF
D2549030614865		06X	-001L	RF
		41S	-040F	001

- ITEM NOT ILLUSTRATED

ALPHA/NUMERIC INDEX

PART NUMBER	AIRLINE STOCK NUMBER	FIG NUMBER	ITEM NUMBER	TOTAL REQ'D
D2549030614866		07N	-001J	RF
		41S	-050F	001
D2549030700000		42N	-001L	RF
D2549030700065		42N	-040L	001
		42T	-040D	001
		48J	-001F	RF
D2549030700200		42P	-001B	RF
D2549030700400		42M	-001L	RF
D2549030700472		13S	-001C	RF
		42J	-090G	001
		42M	-090J	001
		42R	-090D	001
D2549030700600		42Q	-001C	RF
D2549030700665		42Q	-040C	001
		48J	-001G	RF
D2549030700666		42Q	-050C	001
		49	-001J	RF
D2549030700671		12H	-001C	RF
		42Q	-080C	001
D2549030700678		19H	-001E	RF
		42Q	-150B	001
D2549030700681		22F	-001D	RF
		42N	-180D	001
		42Q	-180B	001
		42T	-180C	001
D2549030700683		26U	-001C	RF
		42Q	-200B	001
D2549030700800		42Q	-001E	RF
D2549030700864		05H	-001K	RF
		42Q	-030D	001
		42U	-030D	001
D2549030700865		42Q	-040E	001
		42U	-040E	001
		48A	-001H	RF
D2549030700866		42Q	-050F	001

- ITEM NOT ILLUSTRATED

ALPHA/NUMERIC INDEX

PART NUMBER	AIRLINE STOCK NUMBER	FIG NUMBER	ITEM NUMBER	TOTAL REQ'D
		42U	-050E	001
		49	-001L	RF
D2549030700871		12H	-001B	RF
		42Q	-080E	001
		42U	-080D	001
D2549030700872		13S	-001F	RF
		42Q	-090D	001
		42U	-090E	001
D2549030701000		42Q	-001J	RF
D2549030701066		42S	-050C	001
		49A	-001G	RF
D2549030701200		42N	-001M	RF
			-001N	RF
D2549030701265		42N	-040M	001
		48L	-001M	RF
D2549030701400		42R	-001F	RF
D2549030701600		42R	-001C	RF
D2549030701666		42R	-050C	001
		42T	-050G	001
		49A	-001J	RF
D2549030701800		42R	-001G	RF
D2549030701865		42R	-040G	001
		42S	-040M	001
		48A	-001M	RF
D2549030701866		42R	-050G	001
		42S	-050L	001
		49A	-001H	RF
D2549030701871		12H	-001D	RF
		42R	-080D	001
		42S	-080F	001
D2549030701875		16B	-001M	RF
		42R	-120E	001
		42S	-120G	001
D2549030701876		17E	-001C	RF
		42R	-130E	001

- ITEM NOT ILLUSTRATED

ALPHA/NUMERIC INDEX

PART NUMBER	AIRLINE STOCK NUMBER	FIG NUMBER	ITEM NUMBER	TOTAL REQ'D
		42S	-130G	001
D2549030702000		42R	-001M	RF
D2549030702061		02D	-001K	RF
		42R	-010E	001
D2549030702063		04A	-001Y	RF
		42R	-020E	001
D2549030702064		05F	-001H	RF
		42R	-030H	001
D2549030702065		42R	-040M	001
		48M	-001B	RF
D2549030702066		42R	-050M	001
		49A	-001L	RF
D2549030702071		12H	-001E	RF
		42R	-080F	001
D2549030702072		13S	-001K	RF
		42R	-090H	001
D2549030702073		14A	-001M	RF
		42R	-100F	001
D2549030702074		15Q	-001C	RF
		42R	-110F	001
D2549030702075		16D	-001C	RF
		42R	-120G	001
D2549030702076		17E	-001D	RF
		42R	-130G	001
D2549030702078		19H	-001G	RF
		42R	-150E	001
D2549030702079		20B	-001J	RF
		42R	-160D	001
D2549030702080		21B	-001L	RF
		42R	-170D	001
D2549030702200		42P	-001F	RF
D2549030702265		42P	-040F	001
		48M	-001C	RF
D2549030702266		42P	-050E	001
		49A	-001M	RF

- ITEM NOT ILLUSTRATED

ALPHA/NUMERIC INDEX

PART NUMBER	AIRLINE STOCK NUMBER	FIG NUMBER	ITEM NUMBER	TOTAL REQ'D
D2549030702274		15Q	-001B	RF
		42P	-110E	001
D2549030702400		42R	-001J	RF
D2549030702600		42P	-001L	RF
D2549030702800		42T	-001C	RF
D2549030702865		42T	-040C	001
		48J	-001J	RF
D2549030702866		42T	-050C	001
		49B	-001D	RF
D2549030703000		42U	-001F	RF
D2549030703061		02D	-001L	RF
		42U	-010C	001
D2549030703065		42U	-040F	001
		48J	-001K	RF
D2549030703066		42U	-050F	001
		49B	-001G	RF
D2549030703071		12H	-001F	RF
		42U	-080E	001
D2549030703075		16D	-001D	RF
		42U	-120E	001
D2549030703076		17E	-001E	RF
		42U	-130F	001
D2549030703200		42U	-001J	RF
D2549030703261		02D	-001M	RF
		42U	-010D	001
D2549030703264		05F	-001J	RF
		42U	-030F	001
D2549030703265		42U	-040J	001
		48M	-001K	RF
D2549030703283		26U	-001F	RF
		42U	-200E	001
D2549030703400		42S	-001C	RF
D2549030703600		42T	-001K	RF
D2549030703800		42T	-001D	RF
D2549030704000		42T	-001G	RF

- ITEM NOT ILLUSTRATED

ALPHA/NUMERIC INDEX

PART NUMBER	AIRLINE STOCK NUMBER	FIG NUMBER	ITEM NUMBER	TOTAL REQ'D
D2549030704200		42S	-001J	RF
D2549030704274		15S	-001B	RF
		42S	-110H	001
D2549030704400		42T	-001L	RF
D2549030704474		15S	-001C	RF
		42T	-110F	001
D2549030704600		42U	-001E	RF
D2549030704800		42S	-001G	RF
D2549030704874		15Q	-001G	RF
		42S	-110F	001
D2549030705200		42T	-001M	RF
D2549030705600		42S	-001H	RF
D2549030705674		15Q	-001H	RF
		42S	-110G	001
D2549040500200		42B	-001D	RF
D2549040500265		42B	-040D	001
		48A	-001B	RF
D2549040500266		07U	-001G	RF
		42B	-050K	001
D2549040500272		13L	-001A	RF
		42B	-090D	001
D2549040500273		14A	-001F	RF
		42B	-100B	001
		42G	-100C	001
		42H	-100C	001
		42K	-100D	001
D2549040500283		26Q	-001A	RF
		42B	-200B	001
		42H	-200C	001
D2549040500400		42H	-001E	RF
D2549040500465		42H	-040E	001
		42M	-040D	001
		42R	-040F	001
		48A	-001C	RF
D2549040500466		07X	-001K	RF

- ITEM NOT ILLUSTRATED

ALPHA/NUMERIC INDEX

PART NUMBER	AIRLINE STOCK NUMBER	FIG NUMBER	ITEM NUMBER	TOTAL REQ'D
		42H	-050E	001
		42M	-050D	001
		42N	-050L	001
		42Q	-050L	001
		42R	-050F	001
		42T	-050D	001
		42U	-050G	001
D2549040500472		13P	-001D	RF
		42H	-090E	001
		42L	-090E	001
		42M	-090G	001
D2549040500600		42G	-001C	RF
D2549040500663		04A	-001V	RF
		42G	-020C	001
		42H	-020C	001
		42K	-020D	001
		42M	-020B	001
		42N	-020D	001
		42P	-020B	001
		42Q	-020C	001
		42R	-020C	001
		42S	-020C	001
		42T	020A	001
		42U	020A	001
D2549040500665		42G	-040C	001
		48G	-001C	RF
D2549040500666		07W	-001F	RF
		42G	-050C	001
D2549040500672		13M	-001C	RF
		42G	-090C	001
D2549040500674		15L	-001J	RF
		42G	-110C	001
		42H	-110G	001
		42K	110A	001
		42M	-110D	001

- ITEM NOT ILLUSTRATED

ALPHA/NUMERIC INDEX

PART NUMBER	AIRLINE STOCK NUMBER	FIG NUMBER	ITEM NUMBER	TOTAL REQ'D
		42Q	-110F	001
		42R	-110D	001
D2549040500683		26Q	-001B	RF
		42G	-200C	001
		42H	-200D	001
		42K	-200G	001
D2549040500800		42H	-001K	RF
D2549040500861		02B	-001H	RF
		42H	-010C	001
		42K	-010E	001
		42M	-010C	001
		42N	-010C	001
		42P	-010C	001
		42Q	-010C	001
		42R	-010D	001
		42S	-010B	001
		42T	-010C	001
D2549040500865		42H	-040J	001
		42Q	-040G	001
		48A	-001D	RF
D2549040500866		07X	-001M	RF
		42H	-050H	001
		42K	-050J	001
		42M	-050F	001
D2549040500872		13P	-001G	RF
		42H	-090J	001
		42K	-090J	001
		42Q	-090F	001
D2549040501000		42K	-001J	RF
D2549040501065		42K	-040J	001
		48A	-001F	RF
D2549040501200		42M	-001H	RF
D2549040501272		13S	-001A	RF
		42M	-090F	001
D2549040501400		42Q	-001G	RF

- ITEM NOT ILLUSTRATED

ALPHA/NUMERIC INDEX

PART NUMBER	AIRLINE STOCK NUMBER	FIG NUMBER	ITEM NUMBER	TOTAL REQ'D
			-001N	RF
D2549040501466		42Q	-050G	001
			-050M	001
		49A	-001F	RF
D2549040501600		42M	-001D	RF
D2549040501672		13Q	-001H	RF
		42M	-090C	001
D2549040501673		14A	-001L	RF
		42M	-100B	001
		42N	-100D	001
		42P	-100B	001
		42Q	-100C	001
		42R	-100E	001
		42S	-100B	001
		42T	100A	001
		42U	100A	001
D2549040501800		42Q	-001L	RF
D2549040501865		42Q	-040K	001
		42U	-040G	001
		48J	-001H	RF
D2549040502000		42U	-001G	RF
D3837105520000		23A	020A	001
		23	020A	001
D9250000000085		31	-001A	RF
		41V	210A	001
		41W	210A	001
		41X	210A	001
		41Y	210A	001
		41Z	210A	001
		42A	210A	001
		42	210A	001
D9250000000185		31A	-001A	RF
		41Z	-210B	001
		42A	-210B	001
		42B	210A	001

- ITEM NOT ILLUSTRATED

ALPHA/NUMERIC INDEX

PART NUMBER	AIRLINE STOCK NUMBER	FIG NUMBER	ITEM NUMBER	TOTAL REQ'D
		42C	210A	001
		42D	210A	001
		42E	210A	001
		42F	210A	001
		42G	-210B	001
		42K	-210B	001
		42	-210B	001
D9250000000285		31B	-001A	RF
		41M	210A	001
		42B	-210B	001
		42E	-210B	001
		42F	-210B	001
		42G	210A	001
		42H	210A	001
		42J	210A	001
		42K	210A	001
		42L	210A	001
		42M	210A	001
		42N	210A	001
		42P	210A	001
		42Q	210A	001
		42R	210A	001
		42S	-210B	001
		42T	210A	001
		42U	-210B	001
D9250000000385		31C	-001A	RF
		42K	-210C	001
D9250000000485		31C	-001B	RF
		42Q	-210B	001
D9250000000585		31C	-001C	RF
		42K	-210D	001
		42P	-210B	001
		42Q	-210C	001
		42R	-210B	001
		42S	210A	001

- ITEM NOT ILLUSTRATED

ALPHA/NUMERIC INDEX

PART NUMBER	AIRLINE STOCK NUMBER	FIG NUMBER	ITEM NUMBER	TOTAL REQ'D
		42T	-210B	001
		42U	210A	001
D9250000000685		31C	-001D	RF
		42G	-210C	001
		42Q	-210D	001
		42R	-210C	001
D9259018203400		26A	460A	001
		26C	390A	001
		26E	440A	001
		26G	480A	001
		26J	480A	001
		26N	480A	001
		26P	480A	001
		26R	490A	001
		26T	480A	001
		26U	480A	001
		26	520A	001
D9259018220200		26A	510A	001
		26C	440A	001
		26E	480A	001
		26G	520A	001
		26J	520A	001
		26N	520A	001
		26P	520A	001
		26R	530A	001
		26T	520A	001
		26U	520A	001
		26	570A	001
D9259018400800		26A	470A	001
		26C	400A	001
		26E	450A	001
		26G	490A	001
		26J	490A	001
		26N	490A	001
		26P	490A	001

- ITEM NOT ILLUSTRATED

ALPHA/NUMERIC INDEX

PART NUMBER	AIRLINE STOCK NUMBER	FIG NUMBER	ITEM NUMBER	TOTAL REQ'D
		26R	500A	001
		26T	490A	001
		26U	490A	001
		26	530A	001
D9259023820600		26A	520A	001
		26C	450A	001
		26E	490A	001
		26G	530A	001
		26J	530A	001
		26N	530A	001
		26P	530A	001
		26R	540A	001
		26T	530A	001
		26U	530A	001
		26	580A	001
D9259024203400		26A	490A	001
		26C	420A	001
		26E	460A	001
		26G	500A	001
		26J	500A	001
		26N	500A	001
		26P	500A	001
		26R	510A	001
		26T	500A	001
		26U	500A	001
		26	550A	001
D9259024223400		26A	500A	001
		26C	430A	001
		26E	470A	001
		26G	510A	001
		26J	510A	001
		26N	510A	001
		26P	510A	001
		26R	520A	001
		26T	510A	001

- ITEM NOT ILLUSTRATED

ALPHA/NUMERIC INDEX

PART NUMBER	AIRLINE STOCK NUMBER	FIG NUMBER	ITEM NUMBER	TOTAL REQ'D
		26U	510A	001
		26	560A	001
D9259036500200		26A	450A	001
		26C	380A	001
		26E	430A	001
		26G	470A	001
		26J	470A	001
		26N	470A	001
		26P	470A	001
		26R	480A	001
		26T	470A	001
		26U	470A	001
		26	510A	001
D992-30H10S14		15J	230A	001
		15N	230A	001
DAN125-4		13F	240A	004
		15B	220A	001
		15	210A	001
DAN165-1		17G	120A	AR
DAN298-4030		05A	-060B	013
		05B	-060B	013
		05C	070A	013
		05D	070A	013
		05E	060A	013
		05F	070A	013
		05G	070A	013
		05H	070A	013
		05J	070A	013
		13N	050A	004
		13P	070A	004
		13Q	070A	004
		13R	050A	004
		13S	070A	004
		13T	060A	007
		13U	080A	007

- ITEM NOT ILLUSTRATED

ALPHA/NUMERIC INDEX

PART NUMBER	AIRLINE STOCK NUMBER	FIG NUMBER	ITEM NUMBER	TOTAL REQ'D
		13W	100A	007
		5	-060B	013
DAN316-3025		11A	040A	026
		11B	050A	026
		11C	050A	026
		11D	050A	026
		11E	050A	026
		11F	050A	026
		11G	-050B	024
			050A	026
		11H	050A	026
		11J	050A	026
		11K	050A	026
		11L	050A	026
		11M	-050B	024
			050A	026
		11N	050A	026
		11P	050A	026
		11Q	050A	026
		11R	160A	026
		9	120A	012
DAN387-01		27A	090A	002
		27B	090A	002
		27C	090A	002
		27D	160A	002
		27E	140A	002
		27	090A	002
DAN387-02		27A	100A	002
		27B	100A	002
		27C	100A	002
		27D	170A	002
		27E	150A	002
		27	100A	002
DAN77-2		12A	030A	AR
		12B	030A	AR

- ITEM NOT ILLUSTRATED

ALPHA/NUMERIC INDEX

PART NUMBER	AIRLINE STOCK NUMBER	FIG NUMBER	ITEM NUMBER	TOTAL REQ'D
		12C	030A	AR
		12D	030A	AR
		12E	060A	AR
		12F	060A	AR
		12G	060A	AR
		12H	060A	AR
		12	030A	AR
		18	090A	AR
DAN80A2-200		02A	130A	002
		02B	130A	002
		02C	110A	002
		02D	110A	002
		2	130A	004
DAN80A3-100		02A	340A	001
		02B	330A	001
		02C	320A	001
		02D	340A	001
		2	340A	001
DAN98S3B		17F	135A	AR
DCIN108-02DA2-1		05A	-090B	001
		05B	120A	001
		20A	060A	002
			070A	001
		20B	060A	002
			070A	001
		20C	060A	002
			110A	001
		5	100B	001
DCIN112-01		15B	055A	002
		15C	055A	002
		15E	055A	002
		15F	100A	002
		15G	100A	002
		15H	100A	002
		15J	100A	002

- ITEM NOT ILLUSTRATED

ALPHA/NUMERIC INDEX

PART NUMBER	AIRLINE STOCK NUMBER	FIG NUMBER	ITEM NUMBER	TOTAL REQ'D
DCIN112-04		15K	100A	002
		15L	100A	002
		15M	100A	002
		15N	100A	002
		15P	100A	002
		15Q	100A	002
		15R	110A	002
		15T	120A	002
		15U	120A	002
		15B	050A	001
		15C	050A	001
		15E	050A	001
		15F	090A	001
		15G	090A	001
		15H	090A	001
		15J	090A	001
		15K	090A	001
		15L	090A	001
		15M	090A	001
		15N	090A	001
		15P	090A	001
		15Q	090A	001
DCIN112-05		15R	100A	001
		15T	110A	001
		15U	110A	001
		15B	040A	001
		15C	040A	001
		15E	040A	001
		15F	070A	001
		15G	070A	001
		15H	070A	001
		15J	070A	001
		15K	070A	001
		15L	070A	001
		15M	070A	001

- ITEM NOT ILLUSTRATED

ALPHA/NUMERIC INDEX

PART NUMBER	AIRLINE STOCK NUMBER	FIG NUMBER	ITEM NUMBER	TOTAL REQ'D
DCIN112-06		15N	070A	001
		15P	070A	001
		15Q	070A	001
		15R	080A	001
		15T	090A	001
		15U	090A	001
		15B	045A	001
		15C	045A	001
		15E	045A	001
		15F	080A	001
		15G	080A	001
		15H	080A	001
		15J	080A	001
		15K	080A	001
		15L	080A	001
		15M	080A	001
		15N	080A	001
		15P	080A	001
		15Q	080A	001
		15R	090A	001
		15T	100A	001
		15U	100A	001
DCIN112-07		15B	060A	002
		15C	060A	002
		15E	060A	002
		15F	110A	002
		15G	110A	002
		15H	110A	002
		15J	110A	002
		15K	110A	002
		15L	110A	002
		15M	110A	002
		15N	110A	002
		15P	110A	002
		15Q	110A	002

- ITEM NOT ILLUSTRATED

ALPHA/NUMERIC INDEX

PART NUMBER	AIRLINE STOCK NUMBER	FIG NUMBER	ITEM NUMBER	TOTAL REQ'D
		15R	120A	002
		15T	130A	002
		15U	130A	002
DCIN112-08		15B	035A	001
		15C	035A	001
		15E	035A	001
		15F	060A	001
		15G	060A	001
		15H	060A	001
		15J	060A	001
		15K	060A	001
		15L	060A	001
		15M	060A	001
		15N	060A	001
		15P	060A	001
		15Q	060A	001
		15R	070A	001
		15T	080A	001
		15U	080A	001
DCIN122-19-17		15M	-020C	001
		15Q	-020C	001
DCIN122-19-3		15C	-015C	001
		15F	-020B	001
		15G	-020B	001
		15H	-020B	001
		15J	020A	001
		15L	-020B	001
		15M	020A	001
		15N	020A	001
		15Q	-020B	001
DCIN122-19-3A		15C	-015B	001
		15F	-020C	001
DCIN122-19-4		15C	015A	001
		15E	015A	001
		15F	020A	001

- ITEM NOT ILLUSTRATED

ALPHA/NUMERIC INDEX

PART NUMBER	AIRLINE STOCK NUMBER	FIG NUMBER	ITEM NUMBER	TOTAL REQ'D
		15G	020A	001
		15H	020A	001
		15K	020A	001
		15L	020A	001
		15M	-020B	001
		15P	020A	001
		15Q	020A	001
		15R	030A	001
		15T	040A	001
		15U	040A	001
DCIN122-19-4A		15K	-020B	001
		15L	-020C	001
DCIN122-19-5		15B	015A	001
		15C	-015D	001
DCIN122-9-18P		15C	-015E	001
		15G	-020C	001
		15H	-020C	001
		15K	-020C	001
		15L	-020D	001
DCIN123-19-17		15M	-030C	001
		15Q	-030C	001
DCIN123-19-3		15C	-020C	001
		15F	-030B	001
		15G	-030B	001
		15H	-030B	001
		15J	030A	001
		15L	-030B	001
		15M	030A	001
		15N	030A	001
		15Q	-030B	001
DCIN123-19-3A		15C	-020B	001
		15F	-030C	001
DCIN123-19-4		15C	020A	001
		15E	020A	001
		15F	030A	001

- ITEM NOT ILLUSTRATED

ALPHA/NUMERIC INDEX

PART NUMBER	AIRLINE STOCK NUMBER	FIG NUMBER	ITEM NUMBER	TOTAL REQ'D
		15G	030A	001
		15H	030A	001
		15K	030A	001
		15L	030A	001
		15M	-030B	001
		15P	030A	001
		15Q	030A	001
		15R	040A	001
		15T	050A	001
		15U	050A	001
DCIN123-19-4A		15K	-030B	001
		15L	-030C	001
DCIN123-19-5		15B	020A	001
		15C	-020D	001
DCIN140-02-12		06J	-120B	001
		06M	340A	002
DCIN151-60-9-18		15T	030A	001
		15U	030A	001
DCIN154-002		15Q	290A	001
		15R	380A	001
		15S	260A	001
DCIN154-052		15Q	300A	001
		15R	390A	001
		15S	270A	001
DCIN154-102		15Q	370A	001
		15R	460A	001
		15S	340A	001
DCIN154-152		15Q	360A	001
		15R	450A	001
		15S	330A	001
DCIN154-200		15Q	340A	001
		15R	430A	001
		15S	310A	001
DCIN154-202		15Q	350A	001
		15R	440A	001

- ITEM NOT ILLUSTRATED

ALPHA/NUMERIC INDEX

PART NUMBER	AIRLINE STOCK NUMBER	FIG NUMBER	ITEM NUMBER	TOTAL REQ'D
		15S	320A	001
DCIN154-208		15Q	330A	001
		15R	420A	001
		15S	300A	001
DCIN154-216		15Q	-320A	001
		15R	-410A	001
		15S	-290A	001
DCIN154-230		15Q	310A	001
		15R	400A	001
		15S	280A	001
DCIN201-11-1		12D	155A	AR
			165A	AR
		12G	195A	AR
			205A	AR
DCIN205		13T	200A	AR
		13U	230A	AR
		13W	150A	AR
DCIN600-0130		26V	480A	001
DCIN600-0270		26V	450A	001
DCIN600-0280		26E	-255A	001
		26K	-253A	001
		26M	-255A	001
		26P	-255A	001
		26R	-273A	001
DCIN600-0360		26V	490A	001
DCIN600-0380		26A	310A	001
		26B	280A	001
		26	310A	001
DCIN600-0510		26A	430A	001
		26B	290A	001
		26C	230A	001
			240A	001
			250A	001
			273A	001
		26D	230A	001

- ITEM NOT ILLUSTRATED

ALPHA/NUMERIC INDEX

PART NUMBER	AIRLINE STOCK NUMBER	FIG NUMBER	ITEM NUMBER	TOTAL REQ'D
			240A	001
			250A	001
		26E	230A	001
			240A	001
			250A	001
			275A	001
		26F	230A	001
			240A	001
			250A	001
		26G	230A	001
			240A	001
			250A	001
		26J	230A	001
			240A	001
			250A	001
		26K	230A	001
			240A	001
			250A	001
			255A	001
		26M	230A	001
			240A	001
			250A	001
		26N	230A	001
			240A	001
			250A	001
		26P	230A	001
			240A	001
			250A	001
			313A	001
		26Q	270A	001
			280A	001
			290A	001
		26R	-295C	001
			250A	001
			260A	001

- ITEM NOT ILLUSTRATED

ALPHA/NUMERIC INDEX

PART NUMBER	AIRLINE STOCK NUMBER	FIG NUMBER	ITEM NUMBER	TOTAL REQ'D
			270A	001
		26S	270A	001
			280A	001
			290A	001
		26T	230A	001
			240A	001
			250A	001
		26U	270A	001
			280A	001
			290A	001
		26V	430A	001
			460A	001
		26	320A	001
DCIN600-0540		26R	275A	001
DCIN600-0590		26A	290A	001
		26B	260A	001
		26	290A	001
DCIN600-0650		26N	273A	002
		26R	295A	001
		26U	315A	002
DCIN600-0700		26B	250A	001
		26V	500A	001
		26	-280B	001
DCIN600-0740		26A	280A	001
		26	280A	001
DCIN600-0850		26A	440A	001
		26B	300A	001
		26	330A	001
DCIN600-0900		26A	270A	002
		26B	240A	002
		26	270A	002
DCIN600-0950		26P	315A	001
		26R	-295B	001
			265A	001
		26V	510A	001

- ITEM NOT ILLUSTRATED

ALPHA/NUMERIC INDEX

PART NUMBER	AIRLINE STOCK NUMBER	FIG NUMBER	ITEM NUMBER	TOTAL REQ'D
DCIN600-1000		26V	440A	001
DCIN600-1370		26A	300A	001
		26B	270A	001
		26	300A	001
DCIN600-1400		26R	255A	001
DCIN600-1580		26C	260A	001
		26D	260A	001
		26E	260A	001
		26F	260A	001
		26G	260A	001
		26J	260A	001
		26K	260A	001
		26M	260A	001
		26N	260A	001
		26P	260A	001
		26Q	300A	001
		26R	280A	001
		26S	300A	001
		26T	260A	001
		26U	300A	001
DCIN600-1730		26R	285A	001
DCIN601-0620		26C	270A	001
		26D	270A	001
		26E	270A	001
		26F	270A	001
		26G	270A	001
		26J	270A	001
		26K	270A	001
		26M	270A	001
		26N	270A	001
		26P	270A	001
		26Q	310A	001
		26R	290A	001
		26S	310A	001
		26T	270A	001

- ITEM NOT ILLUSTRATED

ALPHA/NUMERIC INDEX

PART NUMBER	AIRLINE STOCK NUMBER	FIG NUMBER	ITEM NUMBER	TOTAL REQ'D
		26U	310A	001
DCIN601-0750		26A	320A	001
		26B	310A	001
		26	340A	001
DCIN601-1000		26R	290B	001
DCIN602-0640		26A	260A	001
		26B	230A	001
		26	260A	001
DCIN603-1000		26V	420A	001
DIN137A3B2C		26A	540A	004
		26C	470A	004
		26E	510A	004
		26G	550A	004
		26J	550A	004
		26N	550A	004
		26P	550A	004
		26R	560A	004
		26T	550A	004
		26U	550A	004
		26	600A	004
DIN65399-2400CF		17G	-160A	008
DIN65399-2406G		49C	-045A	032
		4	-060A	004
DIN65399-3206CF		07S	-255A	002
DIN6799-4B2A		05A	150A	002
DIN6799RS4		05A	-150B	002
		05D	170A	002
		05F	180A	002
DIN94-1-6X32ST		15L	-180B	004
			180A	002
		15M	180A	004
		15P	180A	002
		15Q	180A	002
		15R	360A	002
		15U	240A	002

- ITEM NOT ILLUSTRATED

ALPHA/NUMERIC INDEX

PART NUMBER	AIRLINE STOCK NUMBER	FIG NUMBER	ITEM NUMBER	TOTAL REQ'D
DIN94-16X32ST		15	-088A	002
DIN965M4X16		19A	-268A	004
		19B	-218A	004
		19C	-268A	004
		19D	-378A	004
		19E	-278A	004
		19F	-350A	004
		19H	-450A	004
		19J	-410A	004
		19K	-410A	004
DIN988-8X14X0-2		20	085A	008
E0052R12B10SNE		27A	040A	001
		27B	040A	001
		27C	040A	001
		27E	070A	001
		27	040A	001
E0052R14B12SNE		27A	220A	001
		27B	220A	001
		27C	220A	001
		27D	410A	001
		27E	290A	001
		27	240A	001
E0052R14B19SNE		26C	354A	001
		26D	380A	001
		26E	380A	001
		26F	380A	001
		26G	380A	001
		26J	380A	001
		26K	380A	001
		26M	380A	001
		26N	380A	001
		26P	380A	001
		26Q	420A	001
		26R	380A	001
		26S	420A	001

- ITEM NOT ILLUSTRATED

ALPHA/NUMERIC INDEX

PART NUMBER	AIRLINE STOCK NUMBER	FIG NUMBER	ITEM NUMBER	TOTAL REQ'D
		26T	380A	001
		26U	420A	001
		26V	230A	001
		27D	070A	001
		27	430A	001
E0052R20B41PNE		31A	020A	001
		31B	020A	001
		31C	020A	001
E0052R8B33SNE		27	-510B	020
E0053R10B6SNE		27A	170A	001
		27B	170A	001
		27C	170A	001
		27D	270A	001
		27E	210A	001
		27	170A	001
E0053R16B26PNF		31	020A	001
E0053R22B55PNE		27A	010A	001
		27B	010A	001
		27C	010A	001
		27D	520A	001
		27E	400A	001
		27	010A	001
E0126-04B		27D	-480A	001
		27E	-360A	001
		31A	-080A	AR
		31B	-080A	AR
		31C	-080A	AR
		31	-080A	AR
E0126-05B		26V	-310A	AR
		27A	-310A	AR
		27B	-310A	AR
		27C	-310A	AR
		27D	-500A	001
		27E	-380A	001
		27	-360A	AR

- ITEM NOT ILLUSTRATED

ALPHA/NUMERIC INDEX

PART NUMBER	AIRLINE STOCK NUMBER	FIG NUMBER	ITEM NUMBER	TOTAL REQ'D
		31A	-090A	AR
		31B	-090A	AR
		31C	-090A	AR
		31	-090A	AR
E0237E09S03A		27B	410A	001
		27C	410A	001
		27D	080A	001
		27E	530A	001
E0237E15S03A		31A	050A	001
		31B	050A	001
		31C	050A	001
E0245-28A0		27D	310A	001
E0248A2-4H9		26V	400A	002
		27A	-240A	003
		27B	-240A	003
		27C	-240A	003
		27D	570A	002
		27E	450A	002
		27	-290A	AR
E0250A0		27D	320A	001
E0252DK1601		27D	330A	008
E0261CF10		27	-210A	AR
			-540A	AR
E0261CF18		27A	-420A	AR
		27B	-440A	AR
		27C	-440A	AR
		27	-580A	AR
E0261CF18U		27D	-600A	001
		27E	-480A	001
E0261CF20		27A	-410A	AR
		27B	-430A	AR
		27C	-430A	AR
		27	-570A	AR
E0261CF20U		26V	-320A	AR
		27D	-610A	001

- ITEM NOT ILLUSTRATED

ALPHA/NUMERIC INDEX

PART NUMBER	AIRLINE STOCK NUMBER	FIG NUMBER	ITEM NUMBER	TOTAL REQ'D
		27E	-490A	001
E0261CF22		27A	-430A	AR
		27B	-450A	AR
		27C	-450A	AR
		27D	-620A	001
		27E	-500A	001
		27	-590A	AR
E0261CF22U		26V	-330A	AR
E0262DK8		27	-500A	AR
			-550A	AR
E0264PF22		27D	-560A	001
		27E	-440A	001
E0264PF24		26V	-350A	AR
E0272TK22		27A	-440A	AR
		27B	-460A	AR
		27C	-460A	AR
		27	-600A	AR
E0272TK22U		27D	-630A	001
		27E	-510A	001
E0272TK24U		26V	-340A	AR
E0274UD22		27	-560A	AR
E0274UD22U		27E	-250A	001
E0396DV2001		27D	-250A	012
		27E	560A	009
E0396DV2200		27D	-260A	006
E0429-01		26A	-138A	001
		26B	-170A	001
		26C	-170A	001
		26D	-170A	001
		26E	-170A	001
		26F	-170A	001
		26G	-170A	001
		26J	-170A	001
		26K	-170A	001
		26	-138A	001

- ITEM NOT ILLUSTRATED

ALPHA/NUMERIC INDEX

PART NUMBER	AIRLINE STOCK NUMBER	FIG NUMBER	ITEM NUMBER	TOTAL REQ'D
E0616BB1600		27A	400A	001
		27B	400A	001
		27C	400A	001
		27D	390A	002
		27	520A	001
E0616BB2000		26V	360A	025
		27A	390A	057
		27B	390A	057
		27C	390A	057
		27D	220A	039
		27E	200A	035
		27	510A	020
E0718-01		26Q	-470A	AR
		26V	-040A	AR
E0718-02		26Q	-480A	AR
		26V	-050A	AR
E2F212-58		06N	-210D	001
		06V	-210C	001
		06Y	-170C	001
E2F212-77		48M	-230G	001
E2F212-85		06M	-210D	001
		06U	-210B	001
		48C	-230D	001
		48G	-230D	001
		48J	-190C	001
		48M	-230C	001
		48	170A	001
EF1840-06AM		49C	-085A	018
EF1840-08CM		05A	-210A	008
		05B	-045A	008
			-140A	008
		05C	-050A	008
		05D	-050A	008
		05E	-040A	008
		05F	-050A	012

- ITEM NOT ILLUSTRATED

ALPHA/NUMERIC INDEX

PART NUMBER	AIRLINE STOCK NUMBER	FIG NUMBER	ITEM NUMBER	TOTAL REQ'D
		05G	-050A	008
		05H	-050A	008
		05J	-050A	008
		5	-140A	008
EF1842-06C2		07A	-120A	008
		07B	-130A	010
			-135A	004
		07C	-100A	008
		07D	-110A	004
		07E	-100A	004
		07F	-145A	004
		07G	-120A	004
		07H	-100A	004
		07J	-100A	004
		07K	-120A	004
		07L	-120A	004
		07M	-110A	004
		07N	-120A	004
		07P	-120A	004
		07Q	-120A	004
		07R	-120A	004
		07S	-110A	004
		07T	-110A	004
		07U	-110A	004
		07V	-110A	004
		07W	-110A	004
		07X	-110A	004
		07Y	-110A	004
		07Z	-110A	004
		49A	-110A	004
		49B	-110A	004
		49C	-110A	004
		49	-110A	004
EN3155-015F2018		27D	-250B	012
EN3155-016M2018		27D	-020B	025

- ITEM NOT ILLUSTRATED

ALPHA/NUMERIC INDEX

PART NUMBER	AIRLINE STOCK NUMBER	FIG NUMBER	ITEM NUMBER	TOTAL REQ'D
EN3646A01006BN		27D	-270B	001
EN6049-006-08-5		31B	230A	AR
		31C	230A	AR
F1000117-00		26A	-133A	001
		26B	-140A	001
		26C	-140A	001
		26D	-140A	001
		26E	-140A	001
		26F	-140A	001
		26G	-140A	001
		26J	-140A	001
		26K	-140A	001
		26	-133A	001
F1000118-00		26A	-135A	001
		26B	-150A	001
		26C	-150A	001
		26D	-150A	001
		26E	-150A	001
		26F	-150A	001
		26G	-150A	001
		26J	-150A	001
		26K	-150A	001
		26	-135A	001
F1000142-00		19A	305A	001
		19B	255A	001
		19C	305A	001
		19D	420A	001
		19	255A	001
F1000240-01		26D	-100B	001
		26E	-100B	001
		26M	100A	001
		26N	100A	001
		26P	100A	001
		26Q	110A	001
		26R	100A	001

- ITEM NOT ILLUSTRATED

ALPHA/NUMERIC INDEX

PART NUMBER	AIRLINE STOCK NUMBER	FIG NUMBER	ITEM NUMBER	TOTAL REQ'D
		26S	110A	001
		26T	100A	001
		26U	110A	001
		26V	060A	001
F1000270-00		26D	-130B	001
		26K	-130B	001
		26M	130A	001
		26N	130A	001
		26P	130A	001
		26Q	150A	001
		26R	140A	001
		26S	150A	001
		26T	130A	001
		26U	150A	001
		26V	070A	001
F1000403-01		19E	-310B	001
		19F	380A	001
		19H	-320B	001
F1000403-02		19E	-310D	001
		19F	-380B	001
		19H	320A	001
F1000403-03		19E	310A	001
		19F	-380C	001
		19H	-320C	001
		19J	440A	001
		19K	440A	001
F1000403-05		19E	-310C	001
F1000404-01		19E	-300B	001
		19F	370A	001
		19H	-310B	001
F1000404-02		19E	-300D	001
		19F	-370B	001
		19H	310A	001
F1000404-03		19E	300A	001
		19F	-370C	001

- ITEM NOT ILLUSTRATED

ALPHA/NUMERIC INDEX

PART NUMBER	AIRLINE STOCK NUMBER	FIG NUMBER	ITEM NUMBER	TOTAL REQ'D
		19H	-310C	001
		19J	430A	001
		19K	430A	001
F1000404-05		19E	-300C	001
F1000407-00		19E	320A	001
		19F	390A	001
		19H	330A	001
		19J	450A	001
		19K	450A	001
F1000407-01		19E	-320B	001
F1000408-00		19E	370A	001
		19F	440A	001
		19H	370A	001
		19J	490A	001
		19K	490A	001
F1000408-01		19E	340A	001
		19F	410A	001
		19H	340A	001
		19J	460A	001
		19K	460A	001
F1000440-00		19E	360A	001
		19F	430A	001
		19H	360A	001
		19J	480A	001
		19K	480A	001
F1000449-00		19E	390A	001
		19F	460A	001
		19H	385A	001
		19J	510A	001
		19K	510A	001
F1000457-00		19E	380A	001
		19F	450A	001
		19H	380A	001
		19J	500A	001
		19K	500A	001

- ITEM NOT ILLUSTRATED

ALPHA/NUMERIC INDEX

PART NUMBER	AIRLINE STOCK NUMBER	FIG NUMBER	ITEM NUMBER	TOTAL REQ'D
F1000457-01		19E	-380B	001
F1001019-00		19A	300A	001
		19B	250A	001
		19C	300A	001
		19D	410A	001
		19	250A	001
F1001019-10		19E	350A	001
		19F	420A	001
		19H	350A	001
		19J	470A	001
		19K	470A	001
F1001020-00		19A	310A	001
		19B	260A	001
		19C	310A	001
		19D	440A	001
		19	260A	001
F1101316-02		26A	130A	001
		26B	130A	001
		26C	130A	001
		26D	130A	001
		26E	130A	001
		26F	130A	001
		26G	130A	001
		26H	180A	001
		26J	130A	001
		26K	130A	001
		26L	180A	001
		26	130A	001
F2547160007465		01H	-040Q	001
		01L	-040M	001
		06E	-001Q	RF
F2547160007483		01H	-200E	001
		01L	-200C	001
		26Q	-001C	RF
		41F	-200D	001

- ITEM NOT ILLUSTRATED

ALPHA/NUMERIC INDEX

PART NUMBER	AIRLINE STOCK NUMBER	FIG NUMBER	ITEM NUMBER	TOTAL REQ'D
		41H	-200D	001
		42B	-200F	001
F2547242620000		11A	140A	004
		11B	160A	004
		11C	160A	004
		11D	150A	004
		11E	150A	004
		11F	150A	004
		11G	150A	004
		11H	150A	004
		11J	150A	004
		11K	150A	004
		11L	170A	004
		11M	170A	004
		11N	170A	004
		11P	170A	004
		11Q	170A	004
		11R	060A	004
		11	140A	004
FL01-0274Y3V1		13D	-060F	001
		13J	-060G	001
		13N	-020H	001
		13P	-040H	001
FL01S0406F3N1		13Q	-040G	001
FLOORSIL2AI8-15		13A	-066A	AR
		13C	-066A	AR
		13E	-066A	AR
		13G	-066A	AR
		13H	-066A	AR
		13J	-62A	AR
		13N	-022A	AR
		13P	-045A	AR
		13	-066A	AR
FLOORSIL2AI8-8		13D	-062A	AR
		13J	-62B	AR

- ITEM NOT ILLUSTRATED

ALPHA/NUMERIC INDEX

PART NUMBER	AIRLINE STOCK NUMBER	FIG NUMBER	ITEM NUMBER	TOTAL REQ'D
		13N	-022B	AR
		13P	-045B	AR
		13Q	-042A	AR
FRH340003H		23B	040A	001
		23C	040A	001
		23D	040A	001
		23	-090B	001
G2F212-09		06X	-210B	001
		48A	-210C	001
		48D	-170B	001
G2F212-18		06F	-200D	001
		06J	-210H	001
		06K	-210D	001
		06P	-210E	001
		06W	-230C	001
		48B	-220C	001
		48K	-230B	001
G2F212-25		06E	-200C	001
		06F	-200C	001
		06K	-210C	001
		06L	210A	001
		06Q	-210B	001
G2F212-51		06C	-200G	001
		06F	-200B	001
		06H	-200D	001
		06J	-210G	001
		06K	-210G	001
		06P	-210B	001
		06U	-210D	001
		06Y	-170E	001
		48D	-170D	001
G2F212-75		06F	-200F	001
		06K	-210F	001
		06Q	-210C	001
		06U	-210E	001

- ITEM NOT ILLUSTRATED

ALPHA/NUMERIC INDEX

PART NUMBER	AIRLINE STOCK NUMBER	FIG NUMBER	ITEM NUMBER	TOTAL REQ'D
		06Y	-170D	001
G2F212-77		06J	-210D	001
		06L	-210F	001
		06V	-210D	001
		48A	-210F	001
		48F	230A	001
		48G	-230B	001
		48J	-190D	001
		48L	-230D	001
		48M	-230D	001
G2F212-85		06A	-170D	001
		06B	-170D	001
		06C	-200H	001
			-200J	001
		06D	-200F	001
		06E	-200B	001
		06F	-200J	001
		06G	-200D	001
		06H	200A	001
		06J	-210B	001
		06K	-210E	001
			210A	001
		06L	-210E	001
		06M	210A	001
		06N	210A	001
		06P	-210D	001
		06Q	-210E	001
		06T	-210B	001
		06U	210A	001
		06V	-210B	001
		06W	-230B	001
		06X	210A	001
		06Y	170A	001
		06Z	170A	001
		48A	210A	001

- ITEM NOT ILLUSTRATED

ALPHA/NUMERIC INDEX

PART NUMBER	AIRLINE STOCK NUMBER	FIG NUMBER	ITEM NUMBER	TOTAL REQ'D
		48B	-220B	001
		48C	-230B	001
		48D	170A	001
		48E	-230B	001
		48F	-230B	001
		48G	-230C	001
		48H	230A	001
		48J	-190B	001
		48K	-230D	001
		48L	-230B	001
		48M	-230E	001
		48	-170C	001
		6	-155H	001
G2F212-98		48C	-230C	001
		48H	-230D	001
G2F212A1		48A	-210E	001
GLS01-002-0000		22D	-220B	001
		22E	-220B	001
		22F	-240B	001
		22G	-200B	001
		22H	-240B	001
		22K	290A	001
HTE400179		22A	270A	001
		22E	330A	001
KM713-12-032		13U	300A	001
L0NC0IN2-183		13M	-060B	001
		13N	-020B	001
L0NC0IN2-187		13C	-060C	001
		13E	-060C	001
		13G	-060F	001
		13H	-060B	001
		13J	-060H	001
		13L	-060H	001
		13P	-040G	001
		13S	-040H	001

- ITEM NOT ILLUSTRATED

ALPHA/NUMERIC INDEX

PART NUMBER	AIRLINE STOCK NUMBER	FIG NUMBER	ITEM NUMBER	TOTAL REQ'D
		13V	060A	AR
		13	-060K	001
L0NC0IN2-191		13A	-060G	001
		13B	-060H	AR
		13H	-060J	001
		13J	-060E	001
		13K	-060D	001
		13N	-020J	001
		13P	-040C	001
L0NC0IN2-193		13E	-060J	001
		13J	-060B	001
		13L	060A	001
		13P	-040D	001
		13Q	-040H	001
		13S	040A	001
LN9199-2406G		22K	-330A	004
LN9240-6X2		22D	130A	002
		22E	130A	002
		22F	150A	002
		22G	110A	002
		22H	150A	002
		22K	370A	002
MS17987C409		02A	010A	002
		02B	010A	002
		02C	010A	002
		02D	010A	002
		2	010A	004
MS18029-1S5		27	420A	001
MS20253P2-65		18	300A	001
MS21042-04		02A	330A	004
		02B	320A	004
		02C	310A	004
		02D	330A	004
		19A	125A	002
			135A	002

- ITEM NOT ILLUSTRATED

ALPHA/NUMERIC INDEX

PART NUMBER	AIRLINE STOCK NUMBER	FIG NUMBER	ITEM NUMBER	TOTAL REQ'D
		19B	125A	002
			135A	002
		19C	125A	002
			135A	002
		19D	150A	002
			210A	002
		19	125A	002
			135A	002
		26A	600A	008
		26B	430A	008
		26C	340A	008
		26D	340A	008
		26E	340A	008
		26F	340A	008
		26G	340A	008
		26H	120A	008
		26J	340A	008
		26K	340A	008
		26L	120A	008
		26M	340A	008
		26N	340A	008
		26P	340A	008
		26T	340A	008
		26	460A	008
		27A	380A	004
		27B	380A	004
		27C	380A	004
		27D	300A	004
		27E	240A	004
		27	220A	004
		2	330A	004
		31	050A	002
MS21042-06		18	250A	003
		19J	120A	002
		19K	110A	002

- ITEM NOT ILLUSTRATED

ALPHA/NUMERIC INDEX

PART NUMBER	AIRLINE STOCK NUMBER	FIG NUMBER	ITEM NUMBER	TOTAL REQ'D
MS21042-08		22D	160A	002
		22E	160A	002
		22F	180A	006
		22G	140A	002
		22H	180A	006
		26E	425A	004
		26H	040A	001
		26L	040A	001
		02D	270A	002
		07A	320A	004
		07Y	350A	002
		12C	190A	005
		12D	190A	005
		12E	230A	005
		12F	230A	005
		12G	240A	005
		12H	270A	005
		12J	260A	005
		13A	050A	AR
		13B	050A	004
		13C	050A	004
		13D	050A	004
		13E	050A	004
		13F	050A	004
		13G	050A	004
		13H	050A	004
		13J	050A	004
		13K	050A	004
		13L	050A	004
		13M	050A	004
		13N	170A	004
		13P	190A	004
		13Q	190A	004
		13R	170A	004
		13S	190A	004

- ITEM NOT ILLUSTRATED

ALPHA/NUMERIC INDEX

PART NUMBER	AIRLINE STOCK NUMBER	FIG NUMBER	ITEM NUMBER	TOTAL REQ'D
		13T	180A	004
		13U	210A	004
			260A	004
		13V	050A	004
		13W	200A	004
		13	050A	005
		16B	200A	002
		16C	190A	002
		16D	190A	002
		16E	200A	002
		16F	190A	003
		17A	-045A	002
			-109A	002
		17B	108A	005
		17F	200A	004
		18	130A	002
			340A	001
		19A	150A	006
		19B	150A	006
		19C	150A	006
		19D	230A	006
		19E	-197A	002
			050A	002
		19F	050A	002
		19G	050A	002
		19H	050A	002
		19J	050A	002
		19K	060A	002
		19	150A	006
		22K	180A	004
		23A	150A	005
		23B	080A	004
			190A	001
		23C	080A	004
		23D	080A	004

- ITEM NOT ILLUSTRATED

ALPHA/NUMERIC INDEX

PART NUMBER	AIRLINE STOCK NUMBER	FIG NUMBER	ITEM NUMBER	TOTAL REQ'D
			190A	001
		23	110A	005
		26E	-305A	001
		26K	-305A	001
		26M	-305A	001
			470A	004
		26P	-305A	001
		26Q	050A	004
		26R	-322A	001
			050A	004
		26S	050A	004
		26T	460A	004
		26U	050A	004
		26V	200A	005
		26	-650A	001
MS21042-3		15T	360A	002
		15U	360A	002
		19A	244A	002
		19B	206A	002
		19C	257A	002
		19D	330A	002
		19E	260A	002
		19F	260A	002
		19H	280A	002
		19J	340A	002
		19K	330A	002
		19	204A	002
		22A	170A	001
		22B	200A	001
		22C	260A	001
		22J	160A	001
		22	190A	001
		23A	090A	002
		23B	110A	003
		23C	110A	003

- ITEM NOT ILLUSTRATED

ALPHA/NUMERIC INDEX

PART NUMBER	AIRLINE STOCK NUMBER	FIG NUMBER	ITEM NUMBER	TOTAL REQ'D
		23D	110A	003
		23	080A	003
		26A	380A	002
		26B	360A	003
		26C	300A	001
		26D	300A	001
		26E	300A	001
		26F	300A	001
		26G	300A	001
		26J	300A	001
		26K	300A	001
		26M	300A	001
		26N	300A	001
		26P	300A	001
		26Q	340A	001
		26R	320A	001
		26S	340A	001
		26T	300A	001
		26U	340A	001
		26V	540A	001
		26	390A	003
		31C	-350A	001
MS21042-4		22A	030A	003
		22B	030A	003
		22C	030A	003
		22	030A	003
MS21051-08		18	125A	003
MS21051L08		18	123A	001
MS21059-08		18	020A	004
		49C	-043A	016
		4	-050A	002
MS21075L08E		48N	290A	008
MS21076-08E		17G	150A	004
MS21083N8		19K	340A	002
MS21919WCH12		23A	080A	001

- ITEM NOT ILLUSTRATED

ALPHA/NUMERIC INDEX

PART NUMBER	AIRLINE STOCK NUMBER	FIG NUMBER	ITEM NUMBER	TOTAL REQ'D
		23	160A	001
MS21919WCH16		21A	120A	003
		21B	120A	003
		21	120A	003
		22A	300A	001
		23A	050A	002
		23C	140A	002
		23	050A	002
MS21919WCH18		22D	390A	001
		23B	-130B	001
			-135B	001
			130A	002
			135A	002
		23D	-130B	001
			130A	002
MS21919WCH6		22K	220A	002
		31A	150A	001
		31B	150A	001
		31C	160A	001
MS21919WCH7		22D	100A	003
		22E	100A	003
		22F	100A	002
		22G	080A	003
		22H	100A	002
		22J	200A	003
		22K	050A	003
		22	-086A	003
MS21919WCH8		22C	100A	002
		22D	340A	001
		22G	270A	001
		22H	310A	001
		22K	055A	001
		22	250A	001
		23B	-137A	001
		23D	-135A	001

- ITEM NOT ILLUSTRATED

ALPHA/NUMERIC INDEX

PART NUMBER	AIRLINE STOCK NUMBER	FIG NUMBER	ITEM NUMBER	TOTAL REQ'D
		48A	480A	002
		48J	-490A	002
		48L	490A	002
		48M	540A	002
MS21919WCH9		22D	400A	001
		23B	140A	001
		23D	140A	001
MS24693C48		07Y	330A	002
		10	080A	003
		13N	110A	010
		13P	130A	010
		13Q	130A	010
		13R	110A	010
		13S	130A	010
		13T	120A	010
		13U	150A	010
		13W	160A	010
MS24693C51		10A	-080B	003
MS24693C52		07W	330A	003
		12A	040A	002
		12B	040A	002
		12C	040A	002
		12D	040A	002
		12E	070A	002
		12F	070A	002
		12G	070A	002
		12H	070A	002
		12J	030A	002
		12	040A	002
MS24693C53		15M	330A	002
MS27212-1-5		27	410A	001
MS35338-158		12A	210A	004
		12B	210A	004
		12C	210A	004
		12D	210A	004

- ITEM NOT ILLUSTRATED

ALPHA/NUMERIC INDEX

PART NUMBER	AIRLINE STOCK NUMBER	FIG NUMBER	ITEM NUMBER	TOTAL REQ'D
		12E	250A	004
		12F	250A	004
		12G	260A	004
		12H	290A	004
		12J	280A	004
		12	130A	004
		22J	250A	001
		26A	400A	004
		26B	380A	004
		26	410A	004
MS35489-33		31B	260A	003
		31C	260A	003
NAS1021N04		26A	254A	002
		26B	470A	006
		26	500A	006
NAS1022N8		19E	220A	002
		19F	220A	002
		19H	240A	002
		19J	300A	002
NAS1068A08		06A	215A	004
		06B	215A	004
		06C	245A	004
		06D	245A	004
		06E	245A	004
		06F	245A	004
		06G	245A	004
		06H	245A	004
		06J	270A	004
		06K	255A	004
		06L	270A	004
		06M	270A	004
		06N	270A	004
		06P	280A	004
		06Q	280A	004
		06R	270A	004

- ITEM NOT ILLUSTRATED

ALPHA/NUMERIC INDEX

PART NUMBER	AIRLINE STOCK NUMBER	FIG NUMBER	ITEM NUMBER	TOTAL REQ'D
		06S	220A	004
		06T	270A	004
		06U	255A	004
		06V	270A	004
		06W	275A	004
		06X	270A	004
		06Y	230A	004
		06Z	230A	004
		15C	210A	002
		15D	230A	002
		15E	200A	002
		15F	280A	001
		15G	280A	002
		15H	280A	001
		15J	280A	001
		15K	290A	001
		15L	280A	001
		15M	280A	001
		15N	280A	001
		15P	280A	001
		15Q	260A	001
		15R	280A	001
		15S	180A	002
		17A	100A	001
			150A	002
		17B	100A	001
			150A	002
		17F	030A	002
		17	100A	001
			160A	002
		48A	270A	004
		48B	280A	004
		48C	290A	004
		48D	230A	004
			235A	004

- ITEM NOT ILLUSTRATED

ALPHA/NUMERIC INDEX

PART NUMBER	AIRLINE STOCK NUMBER	FIG NUMBER	ITEM NUMBER	TOTAL REQ'D
		48E	290A	004
		48F	290A	004
		48G	290A	004
		48H	290A	004
		48J	250A	004
		48K	290A	004
		48L	290A	004
		48M	290A	004
		48	230A	004
		6	195A	004
NAS1068C08		22D	210A	002
		22E	210A	002
		22F	230A	002
		22G	190A	002
		22H	230A	002
		22K	320A	002
NAS1096-2-10		12G	220A	005
		12H	250A	005
		12J	240A	005
		13	105A	003
		20C	140A	006
		48A	460A	002
		48J	-500A	002
		48L	470A	002
		48M	520A	002
NAS1096-2-12		12C	175A	005
		12D	175A	005
		12E	210A	005
		12F	210A	005
		15C	240A	002
		15E	230A	002
		15F	290A	002
		15G	290A	002
		15H	290A	002
		15J	290A	002

- ITEM NOT ILLUSTRATED

ALPHA/NUMERIC INDEX

PART NUMBER	AIRLINE STOCK NUMBER	FIG NUMBER	ITEM NUMBER	TOTAL REQ'D
		15K	300A	002
		15L	290A	002
		15M	290A	002
		15N	290A	002
		15P	290A	002
		15Q	270A	002
		15R	260A	002
		22C	120A	002
NAS1096-2-14		07Y	320A	001
		22F	120A	002
		22H	120A	002
NAS1096-2-16		22A	280A	002
		22D	110A	002
		22E	110A	002
		22G	090A	002
		23A	190A	002
		23B	210A	002
		23C	190A	002
		23	260A	002
		26K	285A	001
		26R	307A	001
NAS1096-2-20		23B	160A	001
		23D	160A	001
NAS1096-2-21		22	-071B	002
NAS1096-2-24		15K	270A	002
		15M	260A	002
		15Q	240A	002
		15R	320A	002
		22G	280A	001
		22H	320A	001
NAS1096-2-4		02A	350A	001
		02B	340A	001
		02C	330A	001
		02D	350A	001
		05A	170A	002

- ITEM NOT ILLUSTRATED

ALPHA/NUMERIC INDEX

PART NUMBER	AIRLINE STOCK NUMBER	FIG NUMBER	ITEM NUMBER	TOTAL REQ'D
		05D	190A	002
		12A	230A	005
		12	150A	005
		15B	025A	003
		15C	025A	003
		15E	025A	003
		15F	040A	003
		15G	040A	003
		15H	040A	003
		15J	040A	003
		15K	040A	003
		15L	040A	003
		15M	040A	003
		15N	040A	003
		15P	040A	003
		15Q	040A	003
		15R	050A	003
		15T	060A	003
		15U	060A	003
		17A	-200B	004
			200A	011
		17B	110A	003
		17	210A	008
		22B	080A	002
		22C	250A	002
		22J	180A	002
		22	071A	002
		26R	120A	014
		26S	130A	011
		26U	130A	011
		2	350A	001
		31A	160A	002
		31B	160A	002
		31C	170A	002
NAS1096-2-5		02A	260A	004

- ITEM NOT ILLUSTRATED

ALPHA/NUMERIC INDEX

PART NUMBER	AIRLINE STOCK NUMBER	FIG NUMBER	ITEM NUMBER	TOTAL REQ'D
		02B	250A	004
		02C	240A	004
		02D	230A	004
			231A	004
		06A	-180B	004
			180A	008
		06B	-180B	008
			180A	012
		06C	-210B	004
			210A	008
		06D	-210B	004
			210A	008
		06E	-210B	008
			210A	012
		06F	-210B	008
			210A	012
		06G	-210B	008
			210A	012
		06H	-210B	004
			210A	008
		06J	-220B	004
			220A	008
		06K	-220B	008
			220A	012
		06L	220A	008
		06M	-220B	004
			220A	008
			221A	002
		06N	-220B	004
			220A	008
		06P	-220B	008
			220A	012
		06R	220A	012
		06S	170A	012
		06T	-220B	008

- ITEM NOT ILLUSTRATED

ALPHA/NUMERIC INDEX

PART NUMBER	AIRLINE STOCK NUMBER	FIG NUMBER	ITEM NUMBER	TOTAL REQ'D
			220A	012
		06U	-220B	004
			220A	008
		06V	-220B	004
			220A	008
		06W	-240C	004
			240A	008
		06X	-220B	004
			220A	008
		06Y	-180B	004
			180A	008
		06Z	-180B	004
			180A	008
		07H	280A	016
		12A	171A	005
		12B	170A	010
		12E	200A	005
		12F	200A	005
		12H	240A	005
		12J	230A	005
		12	090A	010
			091A	005
		13T	210A	001
		13U	240A	002
		15B	180A	002
		15C	220A	002
		15E	210A	002
		15F	260A	002
		15G	190A	005
			260A	002
		15H	190A	005
			260A	002
		15J	190A	005
			260A	002
		15L	260A	002

- ITEM NOT ILLUSTRATED

ALPHA/NUMERIC INDEX

PART NUMBER	AIRLINE STOCK NUMBER	FIG NUMBER	ITEM NUMBER	TOTAL REQ'D
		15N	190A	005
			260A	002
		15P	260A	002
		16A	-120B	008
			120A	010
		16B	-120B	006
			120A	010
		16C	110A	010
		16D	110A	010
		16E	-120B	002
			120A	006
		16	120A	010
		17A	130A	007
		17B	104A	005
			130A	007
		17	140A	007
		19A	090A	004
		19B	090A	004
		19C	090A	004
		19D	070A	004
		19E	180A	005
		19F	180A	004
		19H	200A	004
		19J	260A	004
		19	090A	004
		21A	090A	003
		21B	090A	003
		21	090A	003
		26A	252A	002
		26B	450A	006
		26	480A	006
		2	260A	004
		48A	-220B	004
			220A	008
		48B	230A	008

- ITEM NOT ILLUSTRATED

ALPHA/NUMERIC INDEX

PART NUMBER	AIRLINE STOCK NUMBER	FIG NUMBER	ITEM NUMBER	TOTAL REQ'D
		48C	-240B	004
			240A	008
		48D	-180B	008
			180A	012
		48E	-240B	004
			240A	008
		48F	-240B	004
			240A	008
		48G	-240B	004
			240A	008
		48H	-240B	004
			240A	008
		48J	-200B	004
			200A	008
		48K	-240B	004
			240A	008
		48L	-240B	004
			240A	008
		48M	-240B	004
			240A	008
		48	-180B	004
			180A	008
		6	-160B	008
			160A	012
NAS1096-2-6		02D	260A	002
		06P	230A	002
		13N	130A	002
		13P	150A	002
		13Q	150A	002
		13R	130A	002
		13S	150A	002
		13T	140A	002
			260A	005
		13U	170A	002
			350A	005

- ITEM NOT ILLUSTRATED

ALPHA/NUMERIC INDEX

PART NUMBER	AIRLINE STOCK NUMBER	FIG NUMBER	ITEM NUMBER	TOTAL REQ'D
		15A	020A	014
			170A	004
		15C	130A	AR
		15D	090A	004
			160A	014
		15E	120A	005
		15F	190A	005
		15K	190A	005
		15L	-190B	002
			190A	013
		15M	190A	005
			191A	001
		15Q	190A	007
		15R	180A	004
			200A	005
		15S	090A	004
			120A	014
		15	-020B	002
			020A	014
			160A	004
		22A	070A	AR
		22B	070A	008
		22C	150A	004
		22D	060A	004
		22E	060A	008
		22F	050A	012
		22G	040A	004
		22H	050A	012
		22J	040A	004
		22	070A	008
		26A	330A	001
		26B	340A	002
		26C	275A	001
		26E	285A	001
		26	370A	002

- ITEM NOT ILLUSTRATED

ALPHA/NUMERIC INDEX

PART NUMBER	AIRLINE STOCK NUMBER	FIG NUMBER	ITEM NUMBER	TOTAL REQ'D
NAS1096-2-7		06A	220A	005
			221A	002
		06B	220A	005
			280A	002
		06C	250A	005
			310A	002
		06D	250A	005
		06E	250A	005
			251A	002
		06F	250A	005
		06G	250A	005
			251A	002
		06H	250A	005
			350A	002
		06J	280A	005
			440A	002
		06K	260A	005
			261A	002
		06L	280A	005
			281A	002
		06M	280A	007
		06N	221A	002
			280A	007
		06P	-230B	002
			290A	005
		06Q	230A	002
		06R	280A	007
			390A	009
			410A	002
		06S	230A	005
		06T	280A	005
			281A	002
		06U	260A	005
			261A	002
			380A	009

- ITEM NOT ILLUSTRATED

ALPHA/NUMERIC INDEX

PART NUMBER	AIRLINE STOCK NUMBER	FIG NUMBER	ITEM NUMBER	TOTAL REQ'D
		06V	280A	005
			360A	009
		06W	280A	005
			281A	002
			390A	009
		06X	280A	014
			281A	002
		06Y	240A	014
			241A	002
		06Z	240A	014
		07H	190A	010
		13N	160A	004
		13P	180A	004
		13Q	180A	004
		13R	160A	004
		13S	180A	004
		13T	170A	004
		13U	200A	004
		13W	190A	004
		15B	065A	003
		15C	065A	003
			150A	004
		15D	180A	006
		15E	065A	003
			140A	004
		15F	120A	003
			210A	004
		15G	120A	003
			210A	004
		15H	120A	003
			210A	004
		15J	120A	003
			210A	004
		15K	120A	003
			210A	004

- ITEM NOT ILLUSTRATED

ALPHA/NUMERIC INDEX

PART NUMBER	AIRLINE STOCK NUMBER	FIG NUMBER	ITEM NUMBER	TOTAL REQ'D
		15L	120A	003
			210A	004
		15M	120A	003
			210A	004
		15N	120A	003
			210A	004
		15P	120A	003
			190A	013
			210A	004
		15Q	120A	003
			195A	004
		15R	130A	003
			230A	004
		15S	140A	006
		17C	020A	009
		17D	020A	009
		17E	020A	009
		19A	060A	015
		19B	060A	AR
		19C	060A	017
		19D	050A	017
		19E	-200B	004
			200A	010
		19F	200A	011
		19G	060A	006
		19H	220A	011
		19J	280A	011
		19	060A	AR
		23B	180A	001
		23D	180A	001
		26A	120A	008
		26B	120A	008
		26C	120A	016
		26D	120A	016
		26E	120A	016

- ITEM NOT ILLUSTRATED

ALPHA/NUMERIC INDEX

PART NUMBER	AIRLINE STOCK NUMBER	FIG NUMBER	ITEM NUMBER	TOTAL REQ'D
		26F	120A	016
		26G	120A	016
		26H	060A	016
		26J	120A	016
		26K	120A	016
		26L	060A	016
		26M	120A	016
		26N	120A	016
			275A	002
		26P	120A	016
		26R	325A	002
			340A	004
		26T	120A	016
		26U	325A	002
		26	120A	008
		31	240A	002
		48A	280A	005
		48B	290A	005
			350A	009
		48C	300A	005
			360A	009
		48D	240A	014
			245A	002
		48E	300A	005
			490A	002
		48F	300A	014
		48G	300A	014
		48H	300A	014
		48J	260A	016
		48K	300A	014
		48L	300A	014
		48M	300A	014
		48	-240B	014
			240A	016
		6	200A	005

- ITEM NOT ILLUSTRATED

ALPHA/NUMERIC INDEX

PART NUMBER	AIRLINE STOCK NUMBER	FIG NUMBER	ITEM NUMBER	TOTAL REQ'D
			230A	002
NAS1096-2-8		07K	122A	002
		07L	122A	002
		07M	112A	002
		07N	130A	002
		07P	130A	002
		07Q	130A	002
		07R	130A	002
		07S	120A	002
		07T	120A	002
		07U	120A	002
		07V	130A	002
		07W	130A	002
		07X	130A	002
		07Y	130A	002
		07Z	130A	002
		13U	280A	004
		15A	050A	001
		15D	260A	001
		15S	190A	001
		15	050A	001
		17A	030A	002
			070A	002
		17B	030A	002
			070A	002
		17	070A	002
		49A	130A	002
		49B	130A	002
		49	130A	002
NAS1096-2-9		05E	130A	016
		06S	270A	008
		07H	240A	008
		13A	030A	AR
			100A	007
		13B	030A	004

- ITEM NOT ILLUSTRATED

ALPHA/NUMERIC INDEX

PART NUMBER	AIRLINE STOCK NUMBER	FIG NUMBER	ITEM NUMBER	TOTAL REQ'D
		13C	030A	004
			110A	007
		13D	030A	004
			110A	007
		13E	030A	004
			110A	007
		13F	030A	004
			120A	007
		13G	030A	004
			110A	008
		13H	030A	004
			120A	008
		13J	030A	004
			120A	AR
		13K	030A	004
		13L	030A	004
			120A	007
		13M	030A	004
			120A	007
		13N	210A	010
		13P	230A	010
		13Q	230A	010
		13R	210A	010
		13S	230A	010
		13T	250A	008
		13U	340A	008
		13V	030A	004
			100A	007
		13	030A	002
		17	110A	003
NAS1096-3-10		07A	260A	001
		07B	190A	001
		07D	210A	001
		07F	220A	001
		07G	200A	001

- ITEM NOT ILLUSTRATED

ALPHA/NUMERIC INDEX

PART NUMBER	AIRLINE STOCK NUMBER	FIG NUMBER	ITEM NUMBER	TOTAL REQ'D
		07J	210A	001
		07K	200A	001
		07L	200A	001
		07M	190A	001
		07N	240A	001
		07P	240A	001
		07Q	240A	001
		07R	240A	001
		07S	230A	001
		07U	230A	001
		07V	240A	001
		07W	240A	001
		07X	240A	001
		07Y	270A	001
		07Z	240A	001
		23A	110A	002
		23	140A	003
		49A	240A	001
		49B	240A	001
		49C	240A	001
		49	240A	001
		7	220A	001
NAS1096-3-12		05A	060A	013
		05B	060A	013
		05C	-070B	013
		5	060A	013
		9	160A	012
NAS1096-3-14		23B	090A	003
		23C	090A	003
		23D	090A	003
NAS1096-3-16		22A	186A	001
		22B	230A	001
		22C	200A	001
		22J	230A	001
		22	193A	001

- ITEM NOT ILLUSTRATED

ALPHA/NUMERIC INDEX

PART NUMBER	AIRLINE STOCK NUMBER	FIG NUMBER	ITEM NUMBER	TOTAL REQ'D
		26A	350A	003
		26B	320A	003
		26C	280A	001
		26D	280A	001
		26E	280A	001
		26F	280A	001
		26G	280A	001
		26J	280A	001
		26K	280A	001
		26M	280A	001
		26N	280A	001
		26P	280A	001
		26Q	320A	001
		26R	300A	001
		26S	320A	001
		26T	280A	001
		26U	320A	001
		26	350A	003
NAS1096-3-20		26A	360A	001
		26B	330A	001
		26	360A	AR
NAS1096-3-5		05A	250A	005
			300A	002
		05G	180A	007
		06A	320A	005
		06B	460A	005
		06E	460A	005
		06F	460A	005
		06G	460A	005
		06J	500A	005
		06K	510A	005
		06M	400A	005
		06T	460A	005
		48A	320A	005
		48E	350A	005

- ITEM NOT ILLUSTRATED

ALPHA/NUMERIC INDEX

PART NUMBER	AIRLINE STOCK NUMBER	FIG NUMBER	ITEM NUMBER	TOTAL REQ'D
		6	460A	005
NAS1096-3-6		22A	184A	001
		22B	210A	001
		22C	230A	001
		22J	140A	001
		22	191A	001
		23	033A	002
NAS1096-3-7		02A	100A	003
		02B	100A	003
		02D	360A	002
		05A	050A	012
			280A	001
		05C	060A	012
		05D	060A	012
		05E	050A	012
		05G	060A	012
			160A	004
		05J	060A	012
		06A	300A	004
		06B	440A	004
		06E	440A	004
		06F	440A	004
		06G	440A	004
		06J	490A	004
		06K	500A	004
		06M	390A	004
		06T	440A	004
		20	150A	006
		2	100A	003
		48A	340A	004
		48E	340A	004
		6	440A	004
NAS1096-3-8		07K	124A	005
		07L	124A	005
		07M	114A	005

- ITEM NOT ILLUSTRATED

ALPHA/NUMERIC INDEX

PART NUMBER	AIRLINE STOCK NUMBER	FIG NUMBER	ITEM NUMBER	TOTAL REQ'D
		07N	140A	005
		07P	140A	005
		07Q	140A	005
		07R	140A	005
		07S	130A	005
		07T	130A	005
		07U	130A	005
		07V	140A	005
		07W	140A	005
		07X	140A	005
		07Y	140A	005
		07Z	140A	005
		19A	242A	002
		19B	204A	002
		19C	253A	002
		19D	310A	002
		19E	240A	002
		19F	240A	002
		19H	260A	002
		19J	320A	002
		19	202A	002
		20	140A	002
		49A	140A	005
		49B	140A	005
		49	140A	005
NAS1096-3-9		06A	240A	001
		06B	240A	001
		06C	270A	001
		06D	270A	001
		06E	270A	001
		06F	270A	001
		06G	270A	001
		06H	270A	001
		06J	300A	001
		06K	280A	001

- ITEM NOT ILLUSTRATED

ALPHA/NUMERIC INDEX

PART NUMBER	AIRLINE STOCK NUMBER	FIG NUMBER	ITEM NUMBER	TOTAL REQ'D
		06L	300A	001
		06M	300A	001
		06N	300A	001
		06P	310A	005
		06R	300A	001
		06S	250A	001
		06T	300A	001
		06U	280A	001
		06V	300A	001
		06W	300A	001
		06X	300A	001
		06Y	260A	001
		06Z	260A	001
		48A	300A	001
		48B	310A	001
		48C	320A	001
		48D	260A	001
		48E	320A	001
		48F	320A	001
		48G	320A	001
		48H	320A	001
		48J	280A	001
		48K	320A	001
		48L	320A	001
		48M	320A	001
		48	260A	001
		6	220A	001
NAS1100-04-3		19E	140A	002
		19F	140A	002
		19H	140A	002
		19J	200A	002
		19K	240A	002
NAS1100-04-5		27A	200A	002
		27B	200A	002
		27C	200A	002

- ITEM NOT ILLUSTRATED

ALPHA/NUMERIC INDEX

PART NUMBER	AIRLINE STOCK NUMBER	FIG NUMBER	ITEM NUMBER	TOTAL REQ'D
		27D	550A	004
		27E	430A	004
		27	200A	002
NAS1100-04-6		26A	580A	004
		26B	410A	004
		26C	330A	004
		26D	330A	004
		26E	330A	004
		26F	330A	004
		26G	330A	004
		26J	330A	004
		26K	330A	004
		26M	330A	004
		26N	330A	004
		26P	330A	004
		26T	330A	004
		26	440A	004
NAS1100-04-7		07G	230A	002
		07N	280A	002
		07W	290A	002
NAS1100-06-12		26F	450A	004
		26G	450A	004
		26J	450A	004
		26K	450A	004
		26L	210A	004
		26M	450A	004
		26N	450A	004
		26P	450A	004
		26Q	380A	004
		26R	460A	004
		26S	380A	004
		26T	450A	004
		26U	380A	004
		26V	180A	004
NAS1100-06-3		48D	480A	010

- ITEM NOT ILLUSTRATED

ALPHA/NUMERIC INDEX

PART NUMBER	AIRLINE STOCK NUMBER	FIG NUMBER	ITEM NUMBER	TOTAL REQ'D
		48N	400A	010
NAS1100-06-5		16A	180A	002
		16B	180A	002
		16C	170A	002
		16D	170A	002
		16E	180A	002
		16F	150A	002
		16	180A	002
NAS1100-06-6		22D	230A	004
			290A	004
		22E	230A	004
			350A	004
		22F	250A	004
			310A	004
		22G	210A	004
			320A	004
		22H	250A	004
			360A	004
		22K	410A	004
NAS1100-08-10		26A	040A	004
		26B	040A	004
		26C	040A	004
		26D	040A	004
		26H	030A	004
		26L	030A	004
		26	040A	004
NAS1100-08-12		26P	040A	004
		26T	040A	004
NAS1100-08-4		06A	260A	002
		06B	260A	002
		06C	290A	002
		06D	290A	002
		06E	290A	002
		06F	290A	002
		06G	290A	002

- ITEM NOT ILLUSTRATED

ALPHA/NUMERIC INDEX

PART NUMBER	AIRLINE STOCK NUMBER	FIG NUMBER	ITEM NUMBER	TOTAL REQ'D
		06H	290A	002
		06J	320A	002
		06K	300A	002
		06L	330A	002
		06M	330A	002
		06N	330A	002
		06P	340A	002
		06Q	340A	002
		06T	320A	002
		06U	300A	002
		06V	320A	002
		06W	320A	002
		06X	320A	002
		06Y	380A	002
		06Z	330A	002
		07A	170A	003
		07B	160A	003
		07C	150A	003
		07D	160A	003
		07E	140A	003
		07F	170A	003
		07G	150A	003
		07J	160A	003
		07K	150A	003
		07L	150A	003
		07M	140A	003
		07N	190A	003
		07P	190A	003
		07Q	190A	003
		07R	190A	003
		07S	180A	003
		07T	180A	003
		07U	180A	003
		07V	190A	003
		07W	190A	003

- ITEM NOT ILLUSTRATED

ALPHA/NUMERIC INDEX

PART NUMBER	AIRLINE STOCK NUMBER	FIG NUMBER	ITEM NUMBER	TOTAL REQ'D
		07X	190A	003
		07Y	230A	003
		07Z	190A	003
		48A	440A	002
		48B	330A	002
			380A	002
		48C	340A	002
		48D	-340B	002
			540A	005
		48E	370A	002
		48F	340A	005
		48G	340A	002
		48H	340A	002
		48J	360A	002
		48K	340A	002
			450A	002
		48L	340A	002
		48M	340A	002
			500A	002
		48N	340A	007
		48	340A	002
		49A	190A	003
		49B	190A	003
		49C	190A	003
		49	190A	003
		7	170A	003
NAS1100-08-5		07U	-180B	003
		07X	-190B	003
		20A	-092B	002
		48B	-330B	002
		48K	-340B	002
NAS1100-08-6		06R	320A	002
		48D	340A	002
NAS1100-08-8		26E	040A	004
		26F	040A	004

- ITEM NOT ILLUSTRATED

ALPHA/NUMERIC INDEX

PART NUMBER	AIRLINE STOCK NUMBER	FIG NUMBER	ITEM NUMBER	TOTAL REQ'D
		26G	040A	004
		26J	040A	004
		26K	040A	004
		26M	040A	004
		26N	040A	004
		26P	-040B	004
		26Q	040A	004
		26R	040A	004
		26S	040A	004
		26U	040A	004
NAS1100-3-4		15C	250A	002
		15E	240A	002
		15F	310A	002
		15G	310A	002
		15H	310A	002
		15J	310A	002
		15K	320A	002
		15L	310A	002
		15M	310A	002
		15N	310A	002
		15P	230A	002
		15Q	215A	002
		15R	310A	002
NAS1100E04-5		26A	530A	004
		26C	460A	004
		26E	500A	004
		26G	540A	004
		26J	540A	004
		26N	540A	004
		26P	540A	004
		26R	550A	004
		26T	540A	004
		26U	540A	004
		26	590A	004
NAS1100E08-6		07A	300A	002

- ITEM NOT ILLUSTRATED

ALPHA/NUMERIC INDEX

PART NUMBER	AIRLINE STOCK NUMBER	FIG NUMBER	ITEM NUMBER	TOTAL REQ'D
		15L	360A	002
NAS1100E08-7		22F	020A	001
		22H	020A	001
		22K	160A	004
NAS1102-04-5		19A	123A	002
			133A	002
			290A	004
		19B	123A	002
			133A	002
			240A	004
		19C	123A	002
			133A	002
			290A	004
		19D	130A	002
			190A	002
		19	123A	002
			133A	002
			240A	004
NAS1102-04-6		02A	310A	004
		02B	300A	004
		02C	290A	004
		02D	310A	004
		07Q	270A	018
		07R	270A	018
		07S	260A	018
		07T	260A	018
		07U	260A	018
		07V	270A	018
		07W	270A	018
		07X	270A	018
		07Y	180A	018
		07Z	270A	018
		26A	253A	002
		26B	460A	002
		26	490A	002

- ITEM NOT ILLUSTRATED

ALPHA/NUMERIC INDEX

PART NUMBER	AIRLINE STOCK NUMBER	FIG NUMBER	ITEM NUMBER	TOTAL REQ'D
		27A	020A	002
		27B	020A	002
		27C	020A	002
		27	020A	002
		2	310A	004
		31	040A	002
		49A	270A	018
		49B	270A	018
		49C	270A	018
		49	270A	018
NAS1102-06-4		02A	290A	004
		02B	280A	004
		02C	270A	004
		02D	290A	004
		14A	040A	004
		14B	040A	004
		14C	080A	004
		14	040A	004
		19A	110A	004
		19B	145A	004
		19D	090A	004
		19	145A	004
		2	290A	004
		9	050A	006
			150A	006
NAS1102-06-6		26A	170A	002
		26B	193A	002
		26	170A	002
NAS1102-06-8		19J	110A	002
		19K	090A	002
NAS1102-08-10		13B	-100B	008
		13K	-100B	008
		13N	190A	006
		13P	210A	006
		13Q	210A	006

- ITEM NOT ILLUSTRATED

ALPHA/NUMERIC INDEX

PART NUMBER	AIRLINE STOCK NUMBER	FIG NUMBER	ITEM NUMBER	TOTAL REQ'D
		13R	190A	006
		13S	210A	006
		13T	230A	008
		13U	320A	008
		13V	090A	008
		13W	040A	010
		13	-090B	009
		19E	-185A	002
		20C	080A	002
NAS1102-08-12		15B	130A	008
		22D	150A	004
		22E	150A	004
		22F	170A	004
		22G	130A	004
		22H	170A	004
		22K	400A	004
NAS1102-08-14		07Y	190A	018
		13F	180A	005
NAS1102-08-16		05B	-110B	004
		05C	120A	004
		05D	120A	004
		05E	090A	004
		05F	130A	004
		05G	130A	004
		05H	130A	004
		05J	130A	004
NAS1102-08-18		05A	-110B	004
		05B	-110C	004
		5	-120C	004
NAS1102-08-20		23A	160A	001
		23	070A	001
NAS1102-08-22		13F	190A	005
NAS1102-08-24		14A	075A	001
		14	075A	001
NAS1102-08-26		14A	070A	001

- ITEM NOT ILLUSTRATED

ALPHA/NUMERIC INDEX

PART NUMBER	AIRLINE STOCK NUMBER	FIG NUMBER	ITEM NUMBER	TOTAL REQ'D
		14	070A	001
NAS1102-08-28		14A	-070B	001
			-075B	001
		14B	070A	002
NAS1102-08-5		05A	110A	004
		05B	110A	004
		05C	-120B	004
		06A	140A	004
		06B	140A	004
		06C	170A	004
		06D	170A	004
		06E	170A	004
		06F	170A	004
		06G	170A	004
		06H	170A	004
		06J	180A	004
		06K	180A	004
		06L	180A	004
		06M	180A	004
		06N	180A	004
		06P	180A	004
		06Q	180A	004
		06R	180A	004
		06S	140A	004
		06T	180A	004
		06U	180A	004
		06V	180A	004
		06W	200A	004
		06X	180A	004
		06Y	140A	004
		06Z	140A	004
		16E	210A	003
		16F	200A	003
		18	320A	001
		19B	140A	002

- ITEM NOT ILLUSTRATED

ALPHA/NUMERIC INDEX

PART NUMBER	AIRLINE STOCK NUMBER	FIG NUMBER	ITEM NUMBER	TOTAL REQ'D
		19C	140A	002
		19D	220A	002
		19	140A	002
		20A	-092A	002
		26A	230A	002
		26B	-200B	002
		26	230A	002
		48A	180A	004
		48B	190A	004
		48C	200A	004
		48D	140A	004
			530A	003
		48E	200A	004
		48F	200A	007
		48G	200A	004
		48H	200A	004
		48J	160A	004
		48K	200A	004
		48L	200A	004
		48M	200A	004
		48N	200A	007
		48	140A	004
		5	-120B	004
		6	130A	004
NAS1102-08-6		15B	210A	001
		15	200A	001
		18	110A	002
		21	250A	002
NAS1102-08-7		07A	057A	009
		07B	057A	009
		07F	080A	AR
		13A	090A	009
		13B	100A	008
		13C	100A	009
		13D	100A	008

- ITEM NOT ILLUSTRATED

ALPHA/NUMERIC INDEX

PART NUMBER	AIRLINE STOCK NUMBER	FIG NUMBER	ITEM NUMBER	TOTAL REQ'D
NAS1102-08-8		13E	100A	009
		13F	110A	009
		13G	100A	007
		13H	100A	007
		13J	100A	AR
		13K	100A	008
		13L	100A	008
		13M	100A	008
		13	090A	009
		17A	180A	004
		17B	190A	004
		17F	060A	004
		17	190A	004
		18	040A	006
		19A	200A	002
		19B	200A	002
		19C	200A	002
		19D	270A	002
		19E	210A	002
		19F	210A	002
		19H	230A	002
		19J	290A	002
		19K	290A	002
		19	200A	002
		21A	160A	003
		21B	160A	003
		21	160A	003
		23A	140A	004
		23B	060A	004
		23C	060A	004
		23D	060A	004
		23	120A	004
		26A	180A	002
		26B	194A	002
		26	180A	002

- ITEM NOT ILLUSTRATED

ALPHA/NUMERIC INDEX

PART NUMBER	AIRLINE STOCK NUMBER	FIG NUMBER	ITEM NUMBER	TOTAL REQ'D
NAS1102-3-12		31B	240A	006
		31C	-380A	001
			240A	006
NAS1102-3-14		15T	340A	002
		15U	340A	002
NAS1102-3-8		31B	250A	003
		31C	250A	003
NAS1102-4-8		6	030A	004
NAS1102E08-6		07A	290A	002
		15L	350A	002
NAS1102E3-10		20	120A	002
NAS1102E4-10		06A	030A	004
		06B	030A	004
		06C	030A	004
		06D	030A	004
		06E	030A	002
			035A	002
		06F	030A	004
		06G	030A	004
		06H	030A	004
		06J	030A	004
		06K	030A	004
		06L	030A	004
		06M	030A	004
		06N	030A	004
		06P	030A	004
		06Q	030A	002
			035A	002
		06R	030A	004
		06S	030A	004
		06T	030A	004
		06U	030A	004
		06V	030A	004
NAS1149C0332R		02A	-110B	006
			110A	003

- ITEM NOT ILLUSTRATED

ALPHA/NUMERIC INDEX

PART NUMBER	AIRLINE STOCK NUMBER	FIG NUMBER	ITEM NUMBER	TOTAL REQ'D
		02B	110A	003
		02C	-096A	006
		02D	-370B	006
			370A	002
		05A	240A	008
			290A	003
		05G	170A	011
		06A	310A	004
		06B	430A	009
		06E	430A	009
		06F	430A	009
		06G	430A	009
		06K	490A	009
		06T	430A	009
		07B	-200B	001
		07C	-220B	001
		07D	220A	001
		07E	200A	001
		07F	230A	001
		07G	210A	001
		07J	220A	001
		07K	128A	005
			210A	001
		07L	128A	005
			210A	001
		07M	118A	005
			200A	001
		07N	160A	005
			250A	001
		07P	160A	005
			250A	001
		07Q	160A	005
			250A	001
		07R	160A	005
			250A	001

- ITEM NOT ILLUSTRATED

ALPHA/NUMERIC INDEX

PART NUMBER	AIRLINE STOCK NUMBER	FIG NUMBER	ITEM NUMBER	TOTAL REQ'D
		07S	150A	005
			240A	001
		07T	150A	005
			240A	001
		07U	150A	005
			240A	001
		07V	160A	005
			250A	001
		07W	160A	005
			250A	001
		07X	160A	005
			250A	001
		07Y	160A	005
			280A	001
		07Z	160A	005
			250A	001
		13U	270A	004
		15T	350A	002
		15U	350A	002
		22B	220A	002
		22C	240A	001
		23A	120A	002
		23B	100A	003
		23C	100A	003
		23D	100A	003
		2	-110B	003
		48A	330A	009
			470A	002
		48E	-250B	018
			250A	022
		48J	-510A	002
		48L	480A	002
		48M	530A	002
		49A	160A	005
			250A	001

- ITEM NOT ILLUSTRATED

ALPHA/NUMERIC INDEX

PART NUMBER	AIRLINE STOCK NUMBER	FIG NUMBER	ITEM NUMBER	TOTAL REQ'D
		49B	160A	005
			250A	001
		49C	160A	005
			250A	001
		49	160A	005
			250A	001
		6	430A	009
NAS1149C0363R		15D	270A	002
		15S	200A	002
		15	-035B	013
		19E	250A	002
		19F	250A	002
		19H	270A	002
		19J	330A	004
		19K	310A	002
		19	-203B	004
NAS1149C0432R		22B	020A	003
		22C	020A	003
NAS1149C0463R		02A	230A	001
		02B	220A	001
		02C	210A	001
		02D	200A	001
		2	-230B	001
NAS1149C0563R		18	-175B	002
NAS1149C0832R		19E	230A	002
		19F	230A	002
		19H	250A	002
		19J	310A	002
		19K	320A	002
		49A	320A	002
NAS1149C0932R		22B	050A	002
NAS1149CN432R		02A	320A	004
		02B	310A	004
		02C	300A	004
		02D	320A	004

- ITEM NOT ILLUSTRATED

ALPHA/NUMERIC INDEX

PART NUMBER	AIRLINE STOCK NUMBER	FIG NUMBER	ITEM NUMBER	TOTAL REQ'D
NAS1149CN632R		07G	240A	002
		07N	290A	002
		07W	300A	002
		26A	590A	004
		26C	320A	008
		26D	320A	008
		26E	320A	008
		26F	320A	008
		26G	320A	008
		26H	110A	008
		26J	320A	008
		26K	320A	008
		26L	110A	008
		26M	320A	008
		26N	320A	008
		26P	320A	008
		26T	320A	008
		2	-320B	004
		02A	300A	004
		02B	290A	004
		02C	280A	004
		02D	300A	004
		14A	050A	004
		14B	050A	004
		14C	090A	004
		14	-050B	004
		16B	140A	002
		16C	130A	002
		16D	130A	002
		16E	140A	002
		16F	160A	002
		16	-135B	002
		18	-240B	002
		22D	300A	004
		22E	360A	004

- ITEM NOT ILLUSTRATED

ALPHA/NUMERIC INDEX

PART NUMBER	AIRLINE STOCK NUMBER	FIG NUMBER	ITEM NUMBER	TOTAL REQ'D
		22F	320A	004
		22G	330A	004
		22H	370A	004
		22K	420A	004
		2	-300B	004
		48D	490A	010
		48N	410A	010
NAS1149CN832R		17A	-080B	002
NAS1149CN832R		02A	270A	004
		02B	260A	004
		02C	250A	004
		02D	240A	006
			241A	004
		04A	030B	013
		05A	-180B	002
		05D	200A	002
		05F	210A	003
		06A	-192A	004
			191A	002
		06B	-195A	004
			290A	002
		06C	-220B	013
			320A	002
		06D	-220B	013
			-225A	004
		06E	220A	019
			221A	002
		06F	220A	019
		06G	220A	019
			221A	002
		06H	220A	013
			360A	002
		06J	230A	019
			231A	009
			450A	002

- ITEM NOT ILLUSTRATED

ALPHA/NUMERIC INDEX

PART NUMBER	AIRLINE STOCK NUMBER	FIG NUMBER	ITEM NUMBER	TOTAL REQ'D
		06K	230A	019
			231A	002
		06L	230A	013
			231A	002
		06M	230A	015
			231A	002
			233A	009
		06N	230A	015
			231A	002
		06P	-240B	015
			240A	019
			241A	002
		06Q	240A	027
			241A	002
		06R	230A	015
			231A	002
			400A	009
		06S	180A	019
		06T	230A	019
			231A	002
		06U	230A	015
			231A	002
			390A	009
		06V	230A	015
			370A	009
		06W	-250B	012
			250A	019
			251A	002
			400A	009
		06X	-230B	024
			230A	028
			231A	002
		06Y	190A	024
			191A	002
		06Z	190A	024

- ITEM NOT ILLUSTRATED

ALPHA/NUMERIC INDEX

PART NUMBER	AIRLINE STOCK NUMBER	FIG NUMBER	ITEM NUMBER	TOTAL REQ'D
		07D	250A	002
		07E	230A	002
		07F	260A	002
		07H	200A	040
		07K	126A	002
		07L	126A	002
		07M	116A	002
		07N	150A	002
		07P	150A	002
		07Q	150A	002
		07R	150A	002
		07S	140A	002
		07T	140A	002
		07U	140A	002
		07V	150A	002
		07W	150A	002
		07X	150A	002
		07Y	150A	002
		07Z	150A	002
			151A	002
		13A	-040B	AR
		13B	040A	004
		13C	040A	004
		13D	040A	004
		13E	040A	004
		13F	040A	004
		13G	040A	004
		13H	040A	004
		13J	040A	004
		13K	040A	004
		13L	040A	004
		13M	040A	004
		13N	230A	004
		13P	250A	004
		13Q	250A	004

- ITEM NOT ILLUSTRATED

ALPHA/NUMERIC INDEX

PART NUMBER	AIRLINE STOCK NUMBER	FIG NUMBER	ITEM NUMBER	TOTAL REQ'D
		13R	230A	004
		13S	250A	004
		13T	220A	001
			270A	013
		13U	250A	002
			360A	013
		13V	040A	004
		13W	270A	001
		13	040A	005
		14C	110A	002
		15A	180A	004
		15B	190A	002
		15C	-160B	005
			160A	008
		15D	100A	004
			190A	006
		15E	150A	008
		15F	220A	008
		15G	-220B	005
			220A	008
		15H	-220B	005
			220A	008
		15J	220A	008
		15K	-220B	005
			220A	008
		15L	-220B	005
			220A	006
			225A	002
		15M	220A	008
		15N	220A	008
		15P	220A	008
		15Q	210A	008
		15R	240A	008
		15S	100A	004
			150A	007

- ITEM NOT ILLUSTRATED

ALPHA/NUMERIC INDEX

PART NUMBER	AIRLINE STOCK NUMBER	FIG NUMBER	ITEM NUMBER	TOTAL REQ'D
		15T	410A	010
		15U	410A	010
		15	-030B	002
			-030C	002
			-035D	001
			170A	004
		16A	130A	012
			140A	002
		16B	130A	010
		16C	120A	010
		16D	120A	010
		16E	130A	007
		16F	170A	006
		16	-130B	AR
		17A	-120B	018
			-120C	011
		17B	-120B	018
			106A	005
		17F	040A	011
		17G	090A	001
		18	-120B	002
			-160B	016
			330A	001
		19E	-190B	017
			060A	002
			150A	002
			190A	019
		19F	060A	002
			150A	002
			190A	019
		19G	030A	002
			070A	006
		19H	060A	002
			150A	002
			210A	019

- ITEM NOT ILLUSTRATED

ALPHA/NUMERIC INDEX

PART NUMBER	AIRLINE STOCK NUMBER	FIG NUMBER	ITEM NUMBER	TOTAL REQ'D
		19J	060A	002
			210A	002
			270A	019
		19K	050A	002
			250A	002
			300A	015
		19	-070B	AR
		20C	150A	006
		22B	090A	006
		22C	130A	008
		22D	-370B	001
			070A	008
			370A	002
		22E	070A	012
		22F	060A	016
		22G	050A	009
		22H	060A	016
		22J	050A	008
		22K	170A	007
		22	-089A	001
			080A	010
			085A	001
		23A	200A	007
		23B	-170B	001
			070A	004
			170A	002
			175A	002
		23C	070A	004
			150A	011
		23D	070A	004
			170A	002
		23	-132A	005
		26A	-030B	012
		26C	030A	016
		26D	030A	016

- ITEM NOT ILLUSTRATED

ALPHA/NUMERIC INDEX

PART NUMBER	AIRLINE STOCK NUMBER	FIG NUMBER	ITEM NUMBER	TOTAL REQ'D
		26E	030A	016
		26F	030A	016
		26G	030A	016
		26H	020A	016
		26J	030A	016
		26K	030A	016
		26L	020A	016
		26M	030A	016
		26N	030A	016
			277A	002
		26P	030A	016
		26Q	140A	012
			145A	004
		26R	130A	020
			335A	002
		26S	140A	020
		26T	030A	016
		26U	140A	020
			335A	002
		26V	210A	017
		2	-270B	004
		31A	170A	002
		31B	170A	002
		31C	180A	002
		31	250A	002
		48A	-230B	011
			230A	015
		48B	240A	015
			360A	009
		48C	250A	015
			370A	009
		48D	-190B	020
			-190C	012
			-190D	018
			190A	024

- ITEM NOT ILLUSTRATED

ALPHA/NUMERIC INDEX

PART NUMBER	AIRLINE STOCK NUMBER	FIG NUMBER	ITEM NUMBER	TOTAL REQ'D
		48E	-255A	004
			500A	002
		48F	250A	024
		48G	250A	024
		48H	250A	024
		48J	210A	026
		48K	250A	024
		48L	250A	024
		48M	250A	024
		48N	250A	025
		48	-190B	022
			-190C	020
			190A	026
		49A	150A	002
		49B	150A	002
		49C	150A	002
		49	150A	002
		4	-030B	013
		6	-172A	004
			240A	002
NAS1149D0332K		31C	-360A	001
NAS1149DN816		26	-640A	001
NAS1169-8L		21	260A	002
NAS1304-2		02A	090A	004
		02B	090A	004
		02C	090A	006
		02D	090A	004
			095A	002
		07G	270A	003
		07J	250A	003
		07N	320A	003
		07U	280A	003
		2	090A	004
			095A	002
NAS1304-22		02A	220A	001

- ITEM NOT ILLUSTRATED

ALPHA/NUMERIC INDEX

PART NUMBER	AIRLINE STOCK NUMBER	FIG NUMBER	ITEM NUMBER	TOTAL REQ'D
		02B	210A	001
		02C	200A	001
		02D	190A	001
		2	220A	001
NAS1304-31		02A	140A	004
		02B	140A	004
		02C	130A	002
			135A	002
		02D	120A	002
			125A	002
		2	140A	004
NAS1611-209		02A	180A	005
		02B	180A	005
		02C	170A	005
		02D	160A	005
		2	180A	005
NAS1762J0606		22D	090A	001
		22E	090A	001
		22G	070A	001
		22H	135A	001
		22J	070A	001
		22K	040A	002
		22	-105A	001
NAS1763J080806		22E	340A	001
NAS1763J080808		22A	310A	001
		22B	170A	001
		22C	170A	001
		22D	240A	001
		22F	260A	001
		22G	220A	001
		22H	260A	001
		22J	120A	001
		22K	380A	001
		22	160A	001
NAS1764J060606		22A	260A	002

- ITEM NOT ILLUSTRATED

ALPHA/NUMERIC INDEX

PART NUMBER	AIRLINE STOCK NUMBER	FIG NUMBER	ITEM NUMBER	TOTAL REQ'D
		22E	250A	002
NAS1764J080606		22B	150A	001
		22C	070A	001
		22D	250A	001
		22F	270A	001
		22G	230A	001
		22H	270A	001
		22J	080A	001
		22K	120A	001
		22	140A	001
NAS1764J080806		22A	250A	001
NAS1764J080808		22E	240A	001
NAS1801-08-10		12C	-175B	005
		12D	-175C	005
		12G	-220C	005
		15C	-240B	002
		15G	-290B	002
		15H	-290B	002
		15K	-300B	002
		15L	-290B	002
		15Q	-270B	002
NAS1801-08-11		17A	-106B	002
NAS1801-08-12		14C	100A	002
		16B	-124A	002
		16E	-124A	002
		22K	080A	004
NAS1801-08-14		12D	-175B	005
		12G	-220B	005
		17A	-035A	002
			-107A	002
		17F	210A	004
		22J	220A	001
		22K	260A	001
		22	-088A	001
NAS1801-08-16		22J	190A	001

- ITEM NOT ILLUSTRATED

ALPHA/NUMERIC INDEX

PART NUMBER	AIRLINE STOCK NUMBER	FIG NUMBER	ITEM NUMBER	TOTAL REQ'D
		22	-087A	001
NAS1801-08-18		22D	-360B	001
			410A	001
		23B	-162A	001
		23D	-164A	001
NAS1801-08-21		22	-071C	002
NAS1801-08-22		22	-260B	001
NAS1801-08-24		15C	-220B	002
		15G	-260B	002
		15H	-260B	002
		15K	-270B	002
		15L	-260B	002
		15T	260A	002
		15U	260A	002
		15	-022A	002
		22D	360A	001
		22K	270A	003
		22	260A	001
		23B	-164A	001
		23D	-162A	001
NAS1801-08-4		04A	040A	006
		05F	200A	003
		17A	-205A	007
		17F	050A	011
		26Q	130A	012
		26V	160A	010
		4	040A	006
NAS1801-08-5		04A	020A	007
		06C	-212A	004
		06P	-225B	004
		06Q	-220B	008
			220A	012
		06W	-240B	012
		06X	-225B	004
		12A	170A	010

- ITEM NOT ILLUSTRATED

ALPHA/NUMERIC INDEX

PART NUMBER	AIRLINE STOCK NUMBER	FIG NUMBER	ITEM NUMBER	TOTAL REQ'D
		12C	170A	005
		12D	170A	005
		12G	210A	005
		13W	260A	001
		15C	-130B	008
			-250B	001
		15G	-190B	008
			-310B	001
		15H	-190B	008
			-310B	001
		15K	-190B	008
			-320B	001
		15L	-192A	006
			-310B	001
		15T	270A	010
		15U	270A	010
		15	-026A	010
		16A	-122A	002
		16B	-125A	004
			-125B	002
		16E	-125A	004
			-125B	002
		16F	140A	003
		17A	-070B	002
		17F	110A	007
		17G	070A	025
		18	150A	014
		19E	-180B	004
			-180C	002
		19K	260A	004
		22K	240A	009
		26V	550A	001
		48D	-180C	012
			-187B	004
		48J	-205A	004

- ITEM NOT ILLUSTRATED

ALPHA/NUMERIC INDEX

PART NUMBER	AIRLINE STOCK NUMBER	FIG NUMBER	ITEM NUMBER	TOTAL REQ'D
NAS1801-08-6		48N	240A	012
		48	-185B	004
		49C	130A	002
		4	020A	007
		06A	-182A	004
		06B	-185A	004
		06D	-212A	004
		06E	-215A	004
		06F	-215A	004
		06G	-212A	004
		06H	-215A	004
		06J	-225A	004
		06K	-222A	004
		06M	-225A	004
		06N	-222A	004
		06P	-225A	004
		06Q	-222A	004
		06T	-222A	004
		06U	-222A	004
		06V	-222A	004
		06W	-242A	004
		06X	-225A	004
		06Y	-182A	004
		06Z	-182A	004
		13W	170A	002
		15L	195A	002
		15T	170A	004
			250A	004
		15U	170A	004
			250A	004
		16F	210A	002
		17G	080A	001
		26V	560A	001
		48A	-225A	004
		48C	-245A	004

- ITEM NOT ILLUSTRATED

ALPHA/NUMERIC INDEX

PART NUMBER	AIRLINE STOCK NUMBER	FIG NUMBER	ITEM NUMBER	TOTAL REQ'D
		48D	-187A	004
			-245B	002
		48E	-245A	004
		48F	-245A	004
		48G	-242A	004
		48H	-242A	004
		48J	-205B	004
		48K	242A	004
		48L	-242A	004
		48M	-245A	004
		48	-185A	004
		6	-162A	004
NAS1801-08-7		05F	-200B	003
		06Q	290A	013
		15C	-065B	003
		15G	-120B	003
		15H	-120B	003
		15K	-120B	003
		15L	-120B	003
		15T	140A	003
		15U	140A	003
		17C	-020B	009
		19E	-205A	007
		19K	270A	011
		48N	300A	013
NAS1801-08-8		15	-050B	002
			-050C	001
NAS1801-08-9		13B	110A	007
		13K	120A	007
		13W	060A	006
		13	100A	007
		15T	420A	006
		15U	420A	006
		16F	220A	002
		17A	-030B	002

- ITEM NOT ILLUSTRATED

ALPHA/NUMERIC INDEX

PART NUMBER	AIRLINE STOCK NUMBER	FIG NUMBER	ITEM NUMBER	TOTAL REQ'D
			-106A	002
		17F	170A	004
		22K	250A	002
NAS1801-3-10		07C	210A	001
		07E	190A	001
		07T	230A	001
NAS1801-3-16		26V	520A	001
NAS1801-3-22		23	-140B	003
NAS1801-3-7		02A	102A	002
		02C	-092A	002
		02D	362A	002
		05B	050A	012
		05F	060A	012
		05H	060A	012
		5	050A	012
NAS1801-3-8		19K	280A	002
		49C	140A	005
NAS1801-3-9		06Q	310A	001
		48N	320A	001
NAS1833C08-250		05A	-030A	015
		05B	-030A	015
		05C	-030A	018
		05D	-030A	016
		05E	-030A	015
		05F	-030A	021
			-230A	003
		05G	-030A	018
		05H	-030A	018
		05J	-030A	017
		13U	-120A	010
		17G	-015A	017
		5	-030A	013
NAS1833C08-370		06A	-040A	AR
			-280A	002
		06B	-040A	AR

- ITEM NOT ILLUSTRATED

ALPHA/NUMERIC INDEX

PART NUMBER	AIRLINE STOCK NUMBER	FIG NUMBER	ITEM NUMBER	TOTAL REQ'D
			-300A	002
		06C	-040A	060
			-330A	002
		06D	-040A	051
			-300A	002
		06E	-040A	070
			-310A	002
			-450A	005
		06F	-040A	063
			-330A	002
			-450A	005
		06G	-040A	051
			-310A	002
			-450A	005
		06H	-040A	051
			-370A	002
		06J	-040A	AR
			-040B	008
			-460A	002
		06K	-040A	081
			-360A	002
			-520A	005
		06L	-040A	AR
			-040B	008
		06M	-040A	084
		06N	-040A	AR
		06P	-040A	080
		06Q	-040A	082
		06R	-040A	083
		06S	-040A	095
		06T	-040A	080
		06U	-040A	080
			-400A	002
		06V	-040A	080
		06W	-060A	041

- ITEM NOT ILLUSTRATED

ALPHA/NUMERIC INDEX

PART NUMBER	AIRLINE STOCK NUMBER	FIG NUMBER	ITEM NUMBER	TOTAL REQ'D
		06X	-040A	AR
		06Y	-040A	081
		06Z	-040A	083
		07A	-100A	091
		07B	-080A	080
		07C	-080A	AR
		07D	-080A	AR
		07E	-080A	AR
		07F	-110A	AR
		07G	-080A	082
		07H	-060A	107
		07J	-080A	084
		07K	-080A	082
		07L	-080A	082
		07M	-070A	074
		07N	-080A	084
		07P	-080A	071
		07Q	-080A	AR
		07R	-080A	095
		07S	-070A	096
		07T	-070A	AR
		07U	-070A	093
		07V	-070A	AR
		07W	-070A	AR
		07X	-070A	094
		07Y	-070A	116
		07Z	-070A	094
		13T	-280A	004
		13U	-370A	008
		16	-075A	001
		20A	-050A	006
		20B	-050A	006
		20C	-050A	002
		22D	-365A	001
		48A	-040A	083

- ITEM NOT ILLUSTRATED

ALPHA/NUMERIC INDEX

PART NUMBER	AIRLINE STOCK NUMBER	FIG NUMBER	ITEM NUMBER	TOTAL REQ'D
		48B	-060A	083
		48C	-060A	083
		48D	-040A	083
			-560A	005
		48E	-060A	083
		48F	-060A	083
			-060B	087
		48G	-060A	083
		48H	-060A	083
		48J	-060A	085
		48K	-060A	083
		48L	-060A	083
		48M	-060A	083
		48N	-060A	073
		48	-040A	083
		49A	-070A	094
		49B	-070A	094
		49C	-070A	096
			-300A	022
		49	-070A	094
		6	-040A	066
			-260A	002
		7	-100A	098
NAS1833C3-250		05A	-220A	005
		06A	-330A	005
		06B	-450A	005
		06T	-450A	005
		6	-450A	005
NAS1833C3-350		13R	-060A	003
		13T	-070A	003
		13U	-090A	003
		13W	-220A	003
NAS1833C3-370		05A	-230A	003
		06A	-060A	029
		06B	-060A	029

- ITEM NOT ILLUSTRATED

ALPHA/NUMERIC INDEX

PART NUMBER	AIRLINE STOCK NUMBER	FIG NUMBER	ITEM NUMBER	TOTAL REQ'D
		06C	-060A	029
		06D	-060A	029
		06E	-060A	027
		06F	-060A	029
		06G	-060A	029
		06H	-060A	029
		06J	-070A	029
		06K	-070A	AR
		06L	-070A	029
		06M	-070A	029
		06N	-070A	023
		06P	-070A	023
		06Q	-070A	023
		06R	-070A	023
		06S	-070A	023
		06T	-070A	023
		06U	-070A	023
		06V	-070A	023
		06W	-090A	023
		06X	-070A	019
		06Y	-070A	019
		06Z	-050A	020
		07H	-110A	004
		07M	-065A	005
		07N	-125A	005
		13N	-060A	002
		13P	-080A	002
		13Q	-080A	002
		13S	-080A	002
		48A	-070A	022
		48B	-090A	020
		48C	-090A	020
		48D	-070A	020
		48E	-080A	028
		48F	-090A	020

- ITEM NOT ILLUSTRATED

ALPHA/NUMERIC INDEX

PART NUMBER	AIRLINE STOCK NUMBER	FIG NUMBER	ITEM NUMBER	TOTAL REQ'D
			-090B	024
		48G	-090A	020
		48H	-090A	020
		48J	-090A	024
		48K	-090A	020
		48L	-090A	020
		48M	-090A	020
		48N	-090A	023
		48	-070A	020
		49C	-035A	005
		6	-060A	027
NAS1833C4-370		13B	-080A	004
NAS1833C4-500		13A	-075A	004
		13C	080A	004
		13D	080A	004
		13E	080A	004
		13F	090A	004
		13G	080A	004
		13H	080A	004
		13J	080A	004
		13K	080A	004
		13L	080A	004
		13M	080A	004
		13N	-080A	004
		13P	-100A	004
		13Q	-100A	004
		13R	-080A	004
		13S	-100A	004
		13T	-090A	004
		13U	-110A	004
		13W	-240A	004
NAS1835C08		06A	-050A	007
		06B	-050A	007
		06C	-050A	007
		06D	-050A	007

- ITEM NOT ILLUSTRATED

ALPHA/NUMERIC INDEX

PART NUMBER	AIRLINE STOCK NUMBER	FIG NUMBER	ITEM NUMBER	TOTAL REQ'D
		06E	-050A	007
		06F	-050A	007
		06G	-050A	007
		06H	-050A	007
		06J	-060A	007
		06K	-060A	007
		06L	-060A	007
		06M	-060A	007
		06N	-060A	007
		06P	-060A	007
		06Q	-060A	007
		06R	-060A	007
		06S	-060A	007
		06T	-060A	007
		06U	-060A	007
		06V	-060A	007
		06W	-080A	007
		06X	-060A	009
		06Y	-060A	009
		06Z	-060A	009
		07A	-110A	014
		07B	-090A	019
		07C	-090A	AR
		07D	-100A	AR
		07E	-090A	015
		07F	-120A	AR
		07G	-090A	015
		07H	-070A	013
		07J	-090A	015
		07K	-090A	AR
		07L	-090A	AR
		07M	-080A	024
		07N	-090A	021
		07P	-090A	028
		07Q	-090A	AR

- ITEM NOT ILLUSTRATED

ALPHA/NUMERIC INDEX

PART NUMBER	AIRLINE STOCK NUMBER	FIG NUMBER	ITEM NUMBER	TOTAL REQ'D
		07R	-090A	017
		07S	-080A	015
		07T	-080A	024
		07U	-080A	019
		07V	-080A	018
		07W	-080A	018
		07X	-080A	018
		07Y	-080A	020
		07Z	-080A	018
		13A	-070A	005
		13B	-070A	003
		13C	-070A	003
		13D	-070A	003
		13E	-070A	003
		13F	-080A	003
		13G	-070A	003
		13H	070A	003
		13J	-070A	003
		13K	-070A	003
		13L	-070A	003
		13M	-070A	003
		13N	-070A	020
		13P	-090A	020
		13Q	-090A	020
		13R	-070A	016
		13S	-090A	020
		13T	-080A	016
		13U	-100A	016
		13V	-070A	003
		13W	-230A	016
		13	-070A	003
		48A	-060A	008
		48B	-080A	009
		48C	-080A	009
		48D	-060A	009

- ITEM NOT ILLUSTRATED

ALPHA/NUMERIC INDEX

PART NUMBER	AIRLINE STOCK NUMBER	FIG NUMBER	ITEM NUMBER	TOTAL REQ'D
			-570A	004
		48E	-070A	007
		48F	-080A	009
		48G	-080A	009
		48H	-080A	009
		48J	-080A	008
		48K	-080A	009
		48L	-080A	009
		48M	-080A	009
		48N	-080A	012
		48	-060A	009
		49A	-080A	018
		49B	-080A	018
		49C	-080A	023
			-310A	008
		49	-080A	018
		6	-050A	007
		7	-110A	010
NAS1835C3		06Q	-105A	003
NAS509-3		22A	187A	001
		22B	240A	001
		22C	220A	001
		22J	260A	001
		22	194A	001
		26A	390A	004
		26B	370A	004
		26	400A	004
NAS509-5		02C	-060B	001
		02D	-060B	001
		2	060A	001
NAS509-6		02A	060A	001
		02B	060A	001
		02C	060A	001
		02D	060A	001
NAS509L5		02A	030A	001

- ITEM NOT ILLUSTRATED

ALPHA/NUMERIC INDEX

PART NUMBER	AIRLINE STOCK NUMBER	FIG NUMBER	ITEM NUMBER	TOTAL REQ'D
		02B	030A	001
		02C	030A	001
		02D	030A	001
		2	030A	001
NAS513-5		02A	040A	001
		02B	040A	001
		02C	040A	001
		02D	040A	001
		2	040A	001
NAS514P632-11		18	230A	002
NAS514P632-4		49	290A	004
NAS514P632-5		16A	050A	002
		16B	050A	002
		16C	040A	002
		16D	040A	002
		16E	050A	002
		16F	060A	002
		16	050A	002
		9	080A	002
NAS514P632-6		11A	070A	001
		11B	080A	001
		11C	080A	001
		11D	080A	001
		11E	080A	001
		11F	080A	001
		11G	080A	001
		11H	080A	001
		11J	080A	001
		11K	080A	001
		11L	080A	001
		11M	080A	001
		11N	080A	001
		11P	080A	001
		11Q	080A	001
		11R	180A	002

- ITEM NOT ILLUSTRATED

ALPHA/NUMERIC INDEX

PART NUMBER	AIRLINE STOCK NUMBER	FIG NUMBER	ITEM NUMBER	TOTAL REQ'D
		11	070A	001
NAS514P632-9		15T	300A	002
		15U	300A	002
NAS514P832-12		13F	170A	018
		20A	-090C	006
NAS514P832-14		07H	195A	010
		15T	320A	002
		15U	320A	002
NAS514P832-16		19A	246A	002
		19B	202A	002
		19C	258A	002
		19D	350A	002
		19E	040A	002
		19F	040A	002
		19G	040A	002
		19H	040A	002
		19J	040A	002
		19K	040A	002
		19	206A	002
NAS514P832-4		06A	213A	004
		06B	213A	004
		06C	243A	004
		06D	243A	004
		06E	243A	004
		06F	243A	004
		06G	243A	004
		06H	243A	004
		06J	260A	004
		06K	253A	004
		06L	260A	004
		06M	260A	004
		06N	260A	004
		06P	270A	004
		06Q	270A	004
		06R	260A	004

- ITEM NOT ILLUSTRATED

ALPHA/NUMERIC INDEX

PART NUMBER	AIRLINE STOCK NUMBER	FIG NUMBER	ITEM NUMBER	TOTAL REQ'D
		06S	210A	004
		06T	260A	004
		06U	253A	004
		06V	260A	004
		06W	273A	004
		06X	260A	004
		06Y	220A	004
		06Z	220A	004
		20A	-090B	006
		21A	200A	004
		21B	200A	004
		21	210A	004
		48A	260A	004
		48B	270A	004
		48C	280A	004
		48D	220A	004
			225A	004
		48E	280A	004
		48F	280A	004
		48G	280A	004
		48H	280A	004
		48J	240A	004
		48K	280A	004
		48L	280A	004
		48M	280A	004
		48N	280A	008
		48	220A	004
		6	193A	004
NAS514P832-5		20A	-090D	008
		5	120A	004
NAS514P832-6		06S	310A	003
		07D	240A	002
		07E	220A	002
		07F	250A	002
		07H	220A	003

- ITEM NOT ILLUSTRATED

ALPHA/NUMERIC INDEX

PART NUMBER	AIRLINE STOCK NUMBER	FIG NUMBER	ITEM NUMBER	TOTAL REQ'D
		07Y	370A	002
		07Z	-290A	002
		11A	020A	017
			023A	002
			025A	002
		11B	030A	019
			031A	018
		11C	030A	018
		11D	030A	018
		11E	030A	018
		11F	030A	018
		11G	030A	018
		11H	030A	018
		11J	030A	017
			033A	002
			035A	002
		11K	030A	018
		11L	030A	019
		11M	030A	019
		11N	030A	019
		11P	030A	019
		11Q	030A	019
		11R	140A	019
		11	020A	019
		13F	230A	004
		15P	320A	002
		20A	030A	008
			090A	008
		20B	030A	008
			090A	008
		20C	030A	006
			130A	002
		49A	310A	002
NAS514P832-7		06A	420A	006
		06C	420A	006

- ITEM NOT ILLUSTRATED

ALPHA/NUMERIC INDEX

PART NUMBER	AIRLINE STOCK NUMBER	FIG NUMBER	ITEM NUMBER	TOTAL REQ'D
		06F	310A	001
		06G	400A	006
		06H	510A	006
		06J	380A	001
			590A	006
		06K	460A	006
		06L	390A	001
		06M	490A	006
		06P	470A	006
		06Q	345A	004
		06T	390A	001
		06U	305A	004
			490A	006
		06V	340A	001
			460A	006
		06W	490A	006
		06X	400A	001
			490A	006
		06Y	390A	004
		06Z	350A	001
		10A	050A	033
		10	050A	033
			170A	006
		21A	230A	004
		21B	230A	004
		21	240A	004
		26B	200A	002
		26C	200A	002
		26D	200A	002
		26E	200A	002
		26F	200A	002
		26G	200A	002
		26H	080A	002
		26J	200A	002
		26K	200A	002

- ITEM NOT ILLUSTRATED

ALPHA/NUMERIC INDEX

PART NUMBER	AIRLINE STOCK NUMBER	FIG NUMBER	ITEM NUMBER	TOTAL REQ'D
		26L	080A	002
		26M	200A	002
		26N	200A	002
		26P	200A	002
		26Q	260A	002
		26R	240A	002
		26S	260A	002
		26T	200A	002
		26U	260A	002
		26V	170A	002
		48A	420A	002
			421A	006
		48B	470A	006
		48C	390A	001
			470A	002
			471A	004
		48D	420A	002
			421A	006
		48E	460A	002
			461A	004
		48F	430A	002
		48G	370A	001
			371A	002
		48H	360A	002
			450A	001
		48J	440A	002
			441A	006
		48K	360A	002
		48L	360A	002
			450A	001
		48M	360A	002
		48N	520A	002
		6	400A	006
NAS517-4-11		15P	340A	001
NAS564C19		12A	200A	004

- ITEM NOT ILLUSTRATED

ALPHA/NUMERIC INDEX

PART NUMBER	AIRLINE STOCK NUMBER	FIG NUMBER	ITEM NUMBER	TOTAL REQ'D
		12B	200A	004
		12C	200A	004
		12D	200A	004
		12E	240A	004
		12F	240A	004
		12G	250A	004
		12H	280A	004
		12J	270A	004
		12	120A	004
NAS577B4A		02A	200A	001
		02B	190A	001
		02C	180A	001
		02D	170A	001
		2	200A	001
NAS578-4A		02A	210A	001
		02B	200A	001
		02C	190A	001
		02D	180A	001
		2	210A	001
NAS601-9		17	030A	002
NAS602-4		19A	320A	006
		19B	270A	006
		19C	320A	006
		19D	450A	006
		19	270A	006
NAS6604-2		02A	104A	004
		02C	-090B	006
			-094A	004
		02D	-090B	004
			-095B	002
			364A	004
		26V	190A	004
NAS6604-22		02C	-200B	001
		02D	-190B	001
NAS6604-31		02C	-135B	002

- ITEM NOT ILLUSTRATED

ALPHA/NUMERIC INDEX

PART NUMBER	AIRLINE STOCK NUMBER	FIG NUMBER	ITEM NUMBER	TOTAL REQ'D
		02D	-125B	002
NSA5054-04		49C	-065A	018
NSA5054-08		06E	-105A	003
		06F	-045A	001
		06H	-045A	001
		06J	-050A	001
		06K	-050A	001
		06L	-050A	001
		06M	-050A	001
		06N	-050A	001
		06P	-050A	001
		06Q	-050A	002
		06R	-050A	001
		06S	-050A	001
		06T	-050A	001
		06U	-050A	002
		06V	-050A	AR
		06W	-070A	002
		06X	-050A	002
		06Y	-050A	003
			-105A	002
		06Z	-100A	002
		07M	-075A	004
		07U	-115A	004
		07V	-120A	004
		07W	-120A	004
			-128A	002
		07X	-120A	004
		07Y	-120A	001
		07Z	-120A	004
		15B	-160A	002
		15C	-195A	002
		15E	-180A	002
		15F	-250A	002
		15G	-250A	002

- ITEM NOT ILLUSTRATED

ALPHA/NUMERIC INDEX

PART NUMBER	AIRLINE STOCK NUMBER	FIG NUMBER	ITEM NUMBER	TOTAL REQ'D
		15H	-250A	002
		15J	-250A	002
		15K	-260A	002
		15L	-250A	002
		15M	-250A	002
		15N	-250A	002
		15P	-250A	002
		15Q	-230A	002
		15R	-300A	002
		15T	-200A	002
		15U	-200A	002
		48A	-050A	002
		48B	-070A	002
		48C	-070A	002
		48D	-050A	002
		48E	-120A	002
		48F	-070A	002
		48G	-070A	002
		48H	-070A	002
		48J	-070A	002
		48K	-070A	002
		48L	-070A	002
		48M	-070A	002
		48N	-070A	003
		48	-050A	002
		49A	-120A	004
		49B	-120A	004
		49C	-120A	003
			-128A	002
		49	-120A	004
		6	-087A	001
NSA5054-3		06A	-080A	001
		06B	-080A	001
		06C	-080A	001
		06D	-080A	001

- ITEM NOT ILLUSTRATED

ALPHA/NUMERIC INDEX

PART NUMBER	AIRLINE STOCK NUMBER	FIG NUMBER	ITEM NUMBER	TOTAL REQ'D
		06E	-080A	002
		06F	-080A	001
		06G	-080A	001
		06H	-080A	001
		06J	-090A	001
		06K	-090A	001
		06L	-090A	001
		06M	-090A	001
		06N	-090A	001
		06P	-090A	001
		06Q	-090A	001
		06R	-090A	001
		06S	-090A	001
		06T	-090A	001
		06U	-090A	001
		06V	-090A	001
		06W	-110A	003
		06X	-090A	003
		06Y	-090A	003
		06Z	-080A	003
		48A	-090A	001
		48B	-110A	003
		48C	-110A	003
		48D	-090A	003
		48E	-100A	001
		48F	-110A	003
		48G	-110A	003
		48H	-110A	003
		48J	-110A	003
		48K	-110A	003
		48L	-110A	003
		48M	-110A	003
		48N	-110A	002
		48	-090A	003
		6	-083A	001

- ITEM NOT ILLUSTRATED

ALPHA/NUMERIC INDEX

PART NUMBER	AIRLINE STOCK NUMBER	FIG NUMBER	ITEM NUMBER	TOTAL REQ'D
NSA5054-4		06A	-090A	001
		06B	-090A	008
		06C	-090A	008
		06D	-090A	008
		06E	-090A	007
		06F	-090A	008
		06G	-090A	008
		06H	-090A	008
		06J	-100A	008
		06K	-100A	008
		06L	-100A	008
		06M	-100A	008
		06N	-100A	008
		06P	-100A	008
		06Q	-100A	007
		06R	-100A	008
		06S	-100A	008
		06T	-100A	008
		06U	-100A	008
		06V	-100A	008
		06W	-120A	008
		06X	-100A	006
		06Y	-100A	006
		06Z	-090A	006
		48A	-100A	006
		48B	-120A	006
		48C	-120A	006
		48D	-100A	006
		48E	-110A	006
		48F	-120A	006
		48G	-120A	006
		48H	-120A	006
		48J	-120A	006
		48K	-120A	006
		48L	-120A	006

- ITEM NOT ILLUSTRATED

ALPHA/NUMERIC INDEX

PART NUMBER	AIRLINE STOCK NUMBER	FIG NUMBER	ITEM NUMBER	TOTAL REQ'D
NSA5054-5		48M	-120A	006
		48N	-120A	006
		48	-100A	006
		6	-085A	008
		06A	-070A	012
		06B	-070A	012
		06C	-070A	012
		06D	-070A	012
		06E	-070A	012
		06F	-070A	012
		06G	-070A	012
		06H	-070A	012
		06J	-080A	012
		06K	-080A	012
		06L	-080A	012
		06M	-080A	012
		06N	-080A	012
		06P	-080A	012
		06Q	-080A	012
		06R	-080A	012
		06S	-080A	012
		06T	-080A	012
		06U	-080A	012
		06V	-080A	012
		06W	-100A	012
		06X	-080A	012
		06Y	-080A	012
		06Z	-070A	012
		48A	-080A	016
		48B	-100A	012
		48C	-100A	012
		48D	-080A	012
		48E	-090A	011
		48F	-100A	012
		48G	-100A	012

- ITEM NOT ILLUSTRATED

ALPHA/NUMERIC INDEX

PART NUMBER	AIRLINE STOCK NUMBER	FIG NUMBER	ITEM NUMBER	TOTAL REQ'D
		48H	-100A	012
		48J	-100A	012
		48K	-100A	012
		48L	-100A	012
		48M	-100A	012
		48N	-100A	012
		48	-080A	012
		6	-075A	012
NSA5054C3		6	-080A	005
NSA5054C5		6	-070A	012
NSA5067-08-1		06A	150A	004
			430A	002
		06B	150A	004
		06C	180A	004
			430A	002
		06D	180A	004
		06E	180A	004
		06F	180A	004
		06G	180A	004
			410A	002
		06H	180A	004
			520A	002
		06J	190A	004
			600A	002
		06K	190A	004
			470A	002
		06L	190A	004
		06M	190A	004
			500A	002
		06N	190A	004
		06P	190A	004
			480A	002
		06Q	190A	004
		06R	190A	004
		06S	150A	004

- ITEM NOT ILLUSTRATED

ALPHA/NUMERIC INDEX

PART NUMBER	AIRLINE STOCK NUMBER	FIG NUMBER	ITEM NUMBER	TOTAL REQ'D
		06T	190A	004
		06U	190A	004
			500A	002
		06V	190A	004
			470A	002
		06W	210A	004
			500A	002
		06X	190A	004
			500A	002
		06Y	150A	004
		06Z	150A	004
		07H	185A	002
		07Y	310A	001
		10A	070A	033
		10	070A	033
			190A	002
		15A	060A	001
			190A	004
		15C	230A	004
		15D	110A	004
			280A	001
		15E	220A	004
		15F	300A	004
		15G	300A	004
		15H	300A	004
		15J	300A	004
		15K	310A	004
		15L	300A	004
		15M	300A	004
		15N	300A	004
		15P	300A	004
		15Q	280A	004
		15R	250A	004
		15S	110A	004
			210A	001

- ITEM NOT ILLUSTRATED

ALPHA/NUMERIC INDEX

PART NUMBER	AIRLINE STOCK NUMBER	FIG NUMBER	ITEM NUMBER	TOTAL REQ'D
		15T	280A	004
		15U	280A	004
		15	060A	001
			180A	004
		17A	-046A	002
			-110A	002
		17F	190A	004
		18	180A	002
		48A	190A	004
			540A	002
		48B	200A	004
			480A	002
		48C	210A	004
			490A	002
		48D	150A	004
			440A	002
		48E	210A	004
			470A	002
		48F	210A	004
		48G	210A	004
		48H	210A	004
		48J	170A	004
			450A	002
		48K	210A	004
		48L	210A	004
		48M	210A	004
		48N	210A	004
		48	150A	004
		6	140A	004
			410A	002
NSA5067-08-2		12A	050A	002
		12B	050A	002
		12C	050A	002
		12D	050A	002
		12E	080A	002

- ITEM NOT ILLUSTRATED

ALPHA/NUMERIC INDEX

PART NUMBER	AIRLINE STOCK NUMBER	FIG NUMBER	ITEM NUMBER	TOTAL REQ'D
NSA5307-5C		12F	080A	002
		12G	080A	002
		12H	080A	002
		12J	040A	002
		12	050A	002
		12A	220A	004
		12B	220A	004
		12C	220A	004
		12D	220A	004
		12E	260A	004
		12F	260A	004
		12G	270A	004
		12H	300A	004
		12J	290A	004
NSA5321-6		12	140A	004
		22D	170A	001
		22E	170A	001
		22F	190A	001
		22G	150A	001
		22H	190A	001
		22K	390A	001
NSA5345-06C		07A	-130A	010
		07B	-110A	003
		07C	-110A	AR
		07D	-120A	001
		07E	-115A	AR
		07F	-130A	002
		07G	-100A	001
		07H	-080A	005
		07J	-120A	005
		07K	-100A	004
		07L	-100A	004
		07M	-090A	010
		07N	-100A	004
		07P	-100A	004

- ITEM NOT ILLUSTRATED

ALPHA/NUMERIC INDEX

PART NUMBER	AIRLINE STOCK NUMBER	FIG NUMBER	ITEM NUMBER	TOTAL REQ'D
NSA5345-08C		07Q	-100A	004
		07R	-100A	004
		07S	-090A	004
		07T	-090A	AR
		07U	-090A	004
		07V	-090A	004
		07W	-090A	004
		07X	-090A	004
		07Y	-090A	004
		07Z	-090A	004
		48D	-500A	010
		48N	-420A	010
		49A	-090A	004
		49B	-090A	004
		49C	-090A	004
		49	-090A	004
		7	-130A	005
		05A	-035A	004
		05C	-040A	004
		05D	-040A	004
		05F	-040A	004
		05G	-040A	004
		05H	-040A	004
		05J	-040A	004
		07A	-140A	012
		07B	-120A	006
		07C	-120A	AR
		07D	-130A	004
		07E	-110A	004
		07F	-140A	020
		07G	-110A	004
		07H	-090A	004
		07J	-110A	004
		07K	-110A	004
		07L	-110A	004

- ITEM NOT ILLUSTRATED

ALPHA/NUMERIC INDEX

PART NUMBER	AIRLINE STOCK NUMBER	FIG NUMBER	ITEM NUMBER	TOTAL REQ'D
		07M	-100A	004
		07N	-110A	004
		07P	-110A	004
		07Q	-110A	003
		07R	-110A	003
		07S	-100A	003
		07T	-100A	003
		07U	-100A	003
		07V	-100A	003
		07W	-100A	003
		07X	-100A	003
		07Y	-100A	003
		07Z	-100A	003
		13A	-080A	002
		13B	-090A	002
		13C	-090A	002
		13D	-090A	002
		13E	-090A	002
		13F	-100A	002
		13G	-090A	002
		13H	-090A	002
		13J	-090A	002
		13K	-090A	002
		13L	-090A	002
		13M	-090A	002
		13V	-080A	002
		13	-080A	002
		15D	300A	003
			320A	002
		15S	230A	003
			250A	002
		49A	-100A	003
		49B	-100A	003
		49C	-100A	003
		49	-100A	003

- ITEM NOT ILLUSTRATED

ALPHA/NUMERIC INDEX

PART NUMBER	AIRLINE STOCK NUMBER	FIG NUMBER	ITEM NUMBER	TOTAL REQ'D
		5	-040A	004
		7	-140A	004
NSA5345-3C		07A	-200A	001
NSA5420-410		02D	-250A	004
NSA5527-03-01		26F	440A	004
		26G	440A	004
		26J	440A	004
		26K	440A	004
		26L	200A	004
		26M	440A	004
		26N	440A	004
		26P	440A	004
		26Q	370A	004
		26R	470A	004
		26S	370A	004
		26T	440A	004
		26U	370A	004
		26V	150A	004
NSA5527-03-02		22A	290A	001
		22C	110A	002
		22D	115A	002
			350A	002
		22E	115A	002
		22F	110A	002
		22G	095A	002
			290A	001
		22H	110A	002
			330A	001
		22J	210A	002
		22K	070A	006
		22	-092A	002
			240A	001
		23A	060A	002
		23B	-152A	001
		23C	180A	002

- ITEM NOT ILLUSTRATED

ALPHA/NUMERIC INDEX

PART NUMBER	AIRLINE STOCK NUMBER	FIG NUMBER	ITEM NUMBER	TOTAL REQ'D
		23D	-155A	001
		23	200A	002
NSA5527-03-03		22K	230A	002
NSA5527-03-06		22	-242A	001
		23	-141A	003
NSA5527-03-08		22D	-350B	001
			-350C	001
			380A	001
		23A	070A	001
		23B	-151B	001
			150A	001
			151A	002
		23D	150A	001
		23	230A	001
NSA5575-14		26A	420A	001
		26B	400A	001
		26	430A	001
NSA5575-7		26A	410A	001
		26B	390A	001
		26C	310A	001
		26D	310A	001
		26E	310A	001
		26F	310A	001
		26G	310A	001
		26J	310A	001
		26K	310A	001
		26M	310A	001
		26N	310A	001
		26P	310A	001
		26Q	350A	001
		26R	330A	001
		26S	350A	001
		26T	310A	001
		26U	350A	001
		26V	470A	001

- ITEM NOT ILLUSTRATED

ALPHA/NUMERIC INDEX

PART NUMBER	AIRLINE STOCK NUMBER	FIG NUMBER	ITEM NUMBER	TOTAL REQ'D
		26	420A	001
NSA8140-04LK		02A	070A	001
		02B	070A	001
		02C	070A	001
		02D	070A	001
		2	070A	001
NSA8140-04RK		02C	-050B	001
		02D	-050B	001
		2	050A	001
NSA8140-06RK		02A	050A	001
		02B	050A	001
		02C	050A	001
		02D	050A	001
NSA935401-03		13T	-300A	005
		13U	-390A	005
		23A	-220A	001
		23	-240A	001
		26A	-240A	050
		26B	-210A	050
		26C	-210A	050
		26D	-210A	050
		26E	-210A	050
		26F	-210A	050
		26G	-210A	050
		26H	-090A	050
		26J	-210A	050
		26K	-210A	050
		26L	-090A	050
		26M	-210A	050
		26N	-210A	050
		26P	-210A	050
		26Q	-220A	030
		26R	-200A	030
			-245A	020
		26S	-220A	030

- ITEM NOT ILLUSTRATED

ALPHA/NUMERIC INDEX

PART NUMBER	AIRLINE STOCK NUMBER	FIG NUMBER	ITEM NUMBER	TOTAL REQ'D
		26T	-210A	050
		26U	220A	030
		26V	-130A	070
			-370A	004
		26	-240A	050
		27A	-340A	100
		27B	-340A	100
		27C	-340A	100
		27D	590A	040
		27E	470A	040
		27	-390A	050
		31A	040A	033
		31B	040A	033
		31C	040A	033
NSA935401-04		14C	-050A	001
		26Q	-200A	012
		26R	190A	010
		26S	200A	012
		26U	-200A	012
		26V	-380A	002
		27A	360A	006
		27B	360A	006
		27C	360A	006
		27D	400A	008
		27E	280A	008
NSA935401-05		17A	175A	001
		17B	180A	001
		17C	-060A	001
		17D	-060A	001
		17E	-060A	001
		17F	090A	001
		17G	-040A	001
		17	185A	001
NSA935402-51		27A	350A	025
		27B	350A	025

- ITEM NOT ILLUSTRATED

ALPHA/NUMERIC INDEX

PART NUMBER	AIRLINE STOCK NUMBER	FIG NUMBER	ITEM NUMBER	TOTAL REQ'D
NSA935405-01		27C	350A	025
		27D	030A	014
		27E	030A	014
		31	070A	003
		05A	-020A	035
		05B	-020A	AR
		05C	-020A	AR
		05D	-020A	035
		05E	-020A	035
		05F	-020A	035
		05G	-020A	035
		05H	-020A	035
		05J	-020A	035
		06A	-100A	AR
		06B	-100A	AR
		06C	-100A	015
		06D	-100A	018
		06E	-100A	010
		06F	-100A	010
		06G	-100A	010
		06H	-100A	010
		06J	-110A	010
		06K	-110A	010
		06L	-110A	010
		06M	-110A	010
		06N	-110A	010
		06P	-110A	010
		06Q	-110A	010
		06R	-110A	014
		06S	-110A	010
		06T	-110A	010
		06U	-110A	010
		06V	-110A	010
		06W	-130A	010
		06X	-110A	010

- ITEM NOT ILLUSTRATED

ALPHA/NUMERIC INDEX

PART NUMBER	AIRLINE STOCK NUMBER	FIG NUMBER	ITEM NUMBER	TOTAL REQ'D
		06Y	-110A	014
		06Z	-110A	010
		07A	-050A	035
		07B	-050A	035
		07C	-050A	035
		07D	-050A	035
		07E	-050A	AR
		07F	-050A	035
		07G	-050A	AR
		07H	-030A	035
		07J	-050A	035
		07K	-050A	AR
		07L	-050A	AR
		07M	-040A	035
		07N	-050A	035
		07P	-050A	035
		07Q	-050A	035
		07R	-050A	035
		07S	-040A	035
		07T	-040A	035
		07U	-040A	035
		07V	-040A	035
		07W	-040A	035
		07X	-040A	035
		07Y	-040A	035
		07Z	-040A	035
		13T	-290A	005
		13U	-380A	005
		13W	-250A	003
		19A	-250A	002
		19B	-043A	002
		19C	-250A	002
		19D	-360A	002
		19J	140A	001
		19K	-120A	001

- ITEM NOT ILLUSTRATED

ALPHA/NUMERIC INDEX

PART NUMBER	AIRLINE STOCK NUMBER	FIG NUMBER	ITEM NUMBER	TOTAL REQ'D
		23A	-230A	001
		23	-250A	001
		26A	-250A	020
		26B	-220A	AR
		26C	-220A	025
		26D	-220A	025
		26E	-220A	025
		26F	-220A	025
		26G	-220A	025
		26H	-100A	025
		26J	-220A	025
		26K	-220A	025
		26L	-100A	025
		26M	-220A	025
		26N	-220A	025
		26P	-220A	025
		26Q	-230A	025
		26R	-210A	032
		26S	-230A	025
		26T	-220A	025
		26U	-230A	025
		26V	-140A	065
		26	-250A	AR
		48A	-110A	010
		48B	-125A	010
		48C	-130A	010
		48D	-110A	010
		48E	-130A	010
		48F	-130A	010
		48G	-130A	010
		48H	-130A	010
		48J	-130A	010
		48K	-130A	010
		48L	-130A	010
		48M	-130A	010

- ITEM NOT ILLUSTRATED

ALPHA/NUMERIC INDEX

PART NUMBER	AIRLINE STOCK NUMBER	FIG NUMBER	ITEM NUMBER	TOTAL REQ'D
		48N	-130A	010
		48	-110A	010
		49A	-040A	035
		49B	-040A	035
		49C	-040A	038
		49	-040A	035
		5	-020A	035
		6	-090A	014
		7	-050A	AR
NSA935504-01		26Q	210A	002
		26S	210A	001
		26U	210A	002
NSA935805-04		26P	-317A	001
		26R	-305A	001
		27D	-430A	001
		27E	-310A	001
		27	-300A	AR
NSA935805-06		27A	-260A	AR
		27B	-260A	AR
		27C	-260A	AR
		27D	-440A	001
		27E	-320A	001
		27	-310A	AR
NSA935805-09		26V	-300A	AR
		27A	-270A	AR
		27B	-270A	AR
		27C	-270A	AR
		27D	-450A	001
		27E	-330A	001
		27	-320A	AR
NSA935805-12		27A	-280A	AR
		27B	-280A	AR
		27C	-280A	AR
		27D	-460A	001
		27E	-340A	001

- ITEM NOT ILLUSTRATED

ALPHA/NUMERIC INDEX

PART NUMBER	AIRLINE STOCK NUMBER	FIG NUMBER	ITEM NUMBER	TOTAL REQ'D
		27	-330A	AR
NSA935805-16		27D	-470A	001
		27E	-350A	001
NSA935807-16		31A	140A	001
		31B	140A	001
		31C	150A	001
NSA936501TA1004		27	260A	010
NSA936501TA1005		27	280A	002
NSA936501TA2003		27	480A	006
NSA936501TA2204		27	490A	002
NSA936504TC0805		27	270A	002
NSA936603CC0100		27E	-520A	002
NSA936830-20		27A	070A	009
		27B	070A	009
		27C	070A	009
		27D	010A	012
		27E	010A	005
		27	070A	004
NSA937201ME0400		27	370A	AR
NSA937494-01		26R	-430A	AR
NSA937494-02		26R	-440A	AR
NSA937790-00		27A	-330A	006
		27B	-330A	006
		27C	-330A	006
		27	-380A	AR
NSA937901M20-08		27D	190A	002
		27E	170A	001
NSA937901M20-11		27D	180A	003
		27E	160A	002
NSA937901R0060		27D	200A	001
		27E	180A	001
NSA937901S		27D	210A	002
		27E	190A	002
NSA937910EA2000		27A	080A	014
		27B	080A	014

- ITEM NOT ILLUSTRATED

ALPHA/NUMERIC INDEX

PART NUMBER	AIRLINE STOCK NUMBER	FIG NUMBER	ITEM NUMBER	TOTAL REQ'D
		27C	080A	014
		27D	020A	025
		27E	020A	018
		27	080A	004
NSA938151PA2000		26C	-352A	026
		26D	-360A	026
		26E	-360A	026
		26F	-360A	026
		26G	-360A	026
		26J	-360A	026
		26K	-360A	026
		26M	-360A	026
		26N	-360A	026
		26P	-360A	026
		26Q	-400A	026
		26R	-360A	026
		26S	-400A	026
		26T	-360A	026
		26U	-400A	026
		26V	-280A	026
		27A	-370A	081
		27B	-370A	081
		27C	-370A	081
		27D	-510A	055
		27E	-390A	055
		27	-530A	075
NSA938152SA2000		26C	-353A	019
		26D	-370A	019
		26E	-370A	019
		26F	-370A	019
		26G	-370A	019
		26J	-370A	019
		26K	-370A	019
		26M	-370A	019
		26N	-370A	019

- ITEM NOT ILLUSTRATED

ALPHA/NUMERIC INDEX

PART NUMBER	AIRLINE STOCK NUMBER	FIG NUMBER	ITEM NUMBER	TOTAL REQ'D
		26P	-370A	019
		26Q	-410A	019
		26R	-370A	019
		26S	-410A	019
		26T	-370A	019
		26U	-410A	019
		26V	-290A	019
		27A	050A	043
		27B	050A	043
		27C	050A	043
		27D	050A	040
		27E	050A	037
		27	050A	010
NSA938421-07		31A	070A	002
		31B	070A	002
		31C	070A	002
PAI2830-00		26A	020A	001
		26B	-020B	001
		26C	020A	001
		26D	-020B	001
		26	020A	001
PAPE2800-00		26B	020A	001
		26C	-020B	001
		26	-020B	001
PPA1200-00		26C	-020C	001
		26D	020A	001
PPA1201-00		26E	020A	001
		26F	020A	001
		26G	020A	001
		26J	020A	001
		26K	020A	001
		26M	020A	001
		26N	020A	001
		26T	020A	001
PPA1202-00		26A	-020B	001

- ITEM NOT ILLUSTRATED

ALPHA/NUMERIC INDEX

PART NUMBER	AIRLINE STOCK NUMBER	FIG NUMBER	ITEM NUMBER	TOTAL REQ'D
		26B	-020C	001
		26C	-020D	001
		26D	-020C	001
		26E	-020B	001
		26F	-020B	001
		26J	-020B	001
		26K	-020B	001
		26M	-020B	001
		26N	-020B	001
		26P	020A	001
		26R	020A	001
		26	-020C	001
PPC1200-00		26Q	020A	001
		26S	020A	001
		26U	020A	001
		26V	020A	001
R225400211-004		11G	-140B	001
		11M	-160B	001
R225400211-014		48B	-490A	001
		48K	-460A	001
R225401107-000		01A	-001U	RF
R225401107-002		01H	-001S	RF
R225401107-004		01L	-001Q	RF
R225401115-000		41H	-001T	RF
R225401115-002		01E	-001Q	RF
R22540111500065		06T	-001R	RF
		41H	-040Q	001
R22540111500078		19E	-001V	RF
		41H	-150K	001
		42T	-150J	001
R225401128-000		41	-001Q	RF
R22540112800065		06C	-001Q	RF
		41	-040Q	001
R22540112800078		19A	-001F	RF
		41	-150H	001

- ITEM NOT ILLUSTRATED

ALPHA/NUMERIC INDEX

PART NUMBER	AIRLINE STOCK NUMBER	FIG NUMBER	ITEM NUMBER	TOTAL REQ'D
R225401133-000		01F	-001Q	RF
R22540113300066		01F	-050M	001
		07Y	-001R	RF
R22540113300078		01F	-150M	001
		19B	-001S	RF
R22540113300081		01F	-180E	001
		22	-001J	RF
R225401134-000		01G	-001T	RF
R225401134-002		01K	-001P	RF
R225401134-004		01M	-001S	RF
R225401134-006		01Q	-001Q	RF
R225401134-008		41K	-001R	RF
R225401134-010		41N	-001R	RF
R225401134-012		41T	-001L	RF
R225401134-014		42E	-001R	RF
R225401134-016		01T	-001N	RF
R225401134-018		01V	-001Q	RF
R225401134-020		41B	-001Q	RF
R225401134-022		41D	-001P	RF
R225401134-024		41G	-001T	RF
R225401134-026		41M	-001R	RF
R225401134-028		41M	-001S	RF
R225401134-030		41W	-001U	RF
R225401134-032		41X	-001W	RF
R225401134-034		41X	-001X	RF
R225401134-036		42	-001V	RF
R225401134-038		42E	-001Q	RF
R225401136-000		41H	-001R	RF
R225401136-004		42E	-001T	RF
R225401136-006		42P	-001Q	RF
R225401136-008		42P	-001R	RF
R225401136-010		41C	-001R	RF
R225401136-012		42E	-001S	RF
R225401136-014		42P	-001S	RF
R225401136-016		01M	-001T	RF

- ITEM NOT ILLUSTRATED

ALPHA/NUMERIC INDEX

PART NUMBER	AIRLINE STOCK NUMBER	FIG NUMBER	ITEM NUMBER	TOTAL REQ'D
R225401136-018		42E	-001V	RF
R225401136-020		41C	-001S	RF
R225401136-022		41H	-001X	RF
R225401136-024		42E	-001W	RF
R22540113600072		13D	-001M	RF
		41H	-090P	001
R22540113600074		15H	-001N	RF
		41H	-110L	001
R225401137-000		01J	-001T	RF
R225401137-002		01N	-001R	RF
R225401137-004		01S	-001N	RF
R225401137-006		01V	-001S	RF
R225401137-008		01V	-001T	RF
R225401137-010		01N	-001Q	RF
R225401137-012		01T	-001P	RF
R225401137-014		41	-001R	RF
R225401137-016		41T	-001M	RF
R22540113700072		01J	-090P	001
		01N	-090L	001
		01S	-090K	001
		01V	-090L	001
		13C	-001N	RF
		41A	-090L	001
		41S	-090M	001
		41	-090L	001
R22540113701272		01T	-090L	001
		13A	-001H	RF
R22540113701672		13H	-001Q	RF
		41T	-090F	001
R225401139-000		01F	-001R	RF
R225401142-002		01X	-001S	RF
R225401142000		01W	-001Q	RF
R22540114200065		01W	-040N	001
		01X	-040P	001
		06P	-001Q	RF

- ITEM NOT ILLUSTRATED

ALPHA/NUMERIC INDEX

PART NUMBER	AIRLINE STOCK NUMBER	FIG NUMBER	ITEM NUMBER	TOTAL REQ'D
R22540114200078		01W	-150H	001
		01X	-150G	001
		19E	-001R	RF
		41C	-150F	001
		41F	-150G	001
		41K	-150C	001
		41N	-150J	001
		41R	-150D	001
		41W	-150F	001
		41X	-150F	001
		41	-150F	001
		42E	-150F	001
		42J	-150D	001
		42P	-150D	001
		42	-150E	001
R225401145-000		01G	-001S	RF
R225401145-002		01V	-001P	RF
R225401145-004		41G	-001R	RF
R225401145-006		41M	-001P	RF
R225401145-008		41R	-001R	RF
R225401145-010		41X	-001V	RF
R225401145-012		41C	-001T	RF
R225401145-014		41R	-001U	RF
R22540114500065		01G	-040S	001
		06D	-001N	RF
R22540114500078		01G	-150G	001
		19B	-001Q	RF
R22540114500265		01V	-040M	001
		06N	-001Q	RF
		41G	-040P	001
		41M	-040P	001
R22540114500278		01M	-150F	001
		01Q	-150K	001
		01V	-150H	001
		01W	-150J	001

- ITEM NOT ILLUSTRATED

ALPHA/NUMERIC INDEX

PART NUMBER	AIRLINE STOCK NUMBER	FIG NUMBER	ITEM NUMBER	TOTAL REQ'D
		01Z	-150F	001
		19E	-001X	RF
		41C	-150H	001
		41G	-150J	001
		41J	-150G	001
		41K	-150E	001
		41M	-150H	001
		41R	-150G	001
		41T	-150F	001
		41X	-150K	001
		41Y	-150F	001
		42A	-150D	001
		42B	-150E	001
		42G	-150G	001
		42H	-150G	001
		42K	-150G	001
		42M	-150E	001
		42Q	-150F	001
		42R	-150G	001
R22540114500865		06X	-001S	RF
		41R	-040T	001
R22540114501065		41X	-040P	001
		48	-001Q	RF
R22540114501281		22D	-001M	RF
		41C	-180C	001
R22540114501478		19E	-001AA	RF
		41C	-150J	001
		41R	-150J	001
R22540114501481		22D	-001L	RF
		41R	-180B	001
R22540114501482		23B	-001R	RF
R22540114501482		41C	-190C	001
		41R	-190E	001
R225401146-000		1	-001Q	RF
R225401146-002		01A	-001T	RF

- ITEM NOT ILLUSTRATED

ALPHA/NUMERIC INDEX

PART NUMBER	AIRLINE STOCK NUMBER	FIG NUMBER	ITEM NUMBER	TOTAL REQ'D
R22540114600065		01A	-040N	001
		1	-040K	001
		6	-001S	RF
R22540114600078		01A	-150H	001
		19B	-001P	RF
		1	-150H	001
R225401152-000		01X	-001R	RF
R225401152-002		41C	-001N	RF
R225401152-004		41F	-001S	RF
R225401152-006		41H	-001S	RF
R225401152-008		42	-001R	RF
R225401152-010		42J	-001Q	RF
R22540115200065		01X	-040N	001
		06P	-001R	RF
		41C	-040K	001
		41F	-040N	001
		41H	-040P	001
		41K	-040M	001
		41N	-040M	001
		41	-040N	001
R22540115200865		42	-040L	001
		48	-001N	RF
R225401153-000		01V	-001R	RF
R225401159-000		01J	-001S	RF
R225401160-000		01Z	-001R	RF
R225401160-002		41B	-001R	RF
R225401168-000		41H	-001Q	RF
R225401168-002		41N	-001M	RF
R225401168-004		01X	-001T	RF
R225401168-006		01U	-001R	RF
R225401168-008		41W	-001R	RF
R225401168-010		41X	-001T	RF
R225401168-012		41X	-001U	RF
R225401168-014		41F	-001T	RF
R225401168-016		01Y	-001S	RF

- ITEM NOT ILLUSTRATED

ALPHA/NUMERIC INDEX

PART NUMBER	AIRLINE STOCK NUMBER	FIG NUMBER	ITEM NUMBER	TOTAL REQ'D
R225401168-018		41C	-001P	RF
R225401168-020		41H	-001U	RF
R225401168-022		41N	-001Q	RF
R225401168-024		41W	-001S	RF
R225401168-026		42	-001T	RF
R225401168-028		41F	-001U	RF
R22540116800072		13H	-001P	RF
		41H	-090N	001
		41N	-090L	001
R22540116800074		15G	-001Q	RF
		41H	-110K	001
		41N	-110J	001
R22540116800078		19F	-001N	RF
		41H	-150J	001
		41N	-150K	001
R22540116800465		01U	-040M	001
		01X	-040Q	001
		01Y	-040M	001
		06N	-001P	RF
		41C	-040L	001
		41F	-040P	001
		41H	-040R	001
R22540116800478		41X	-150J	001
R22540116800478		01U	-150F	001
		01X	-150H	001
		01Y	-150H	001
		19F	-001R	RF
		41C	-150G	001
		41F	-150H	001
		41H	-150L	001
		41N	-150M	001
		41W	-150G	001
		42	-150F	001
R22540116800865		06Y	-001Q	RF
		41W	-040L	001

- ITEM NOT ILLUSTRATED

ALPHA/NUMERIC INDEX

PART NUMBER	AIRLINE STOCK NUMBER	FIG NUMBER	ITEM NUMBER	TOTAL REQ'D
		41X	-040N	001
		42	-040M	001
R22540116801065		06Z	-001T	RF
R22540116802265		06V	-001Q	RF
		41N	-040N	001
R225401172-000		41T	-001J	RF
R225401172-002		01M	-001R	RF
R225401172-004		01Q	-001P	RF
R225401172-006		01W	-001R	RF
R225401172-008		01Z	-001Q	RF
R225401172-010		41C	-001Q	RF
R225401172-012		41G	-001S	RF
R225401172-014		41K	-001Q	RF
R225401172-016		41M	-001Q	RF
R225401172-018		41R	-001S	RF
R22540117200065		06U	-001P	RF
		41T	-040J	001
R22540117200265		01M	-040N	001
		06G	-001Q	RF
R22540117200465		01Q	-040P	001
		06K	-001Q	RF
R22540117200665		01W	-040P	001
		01Z	-040L	001
		06N	-001R	RF
		41C	-040M	001
		41G	-040Q	001
		41K	-040P	001
		41M	-040Q	001
R22540117201865		06W	-001Q	RF
		41R	-040U	001
R225401175-000		41B	-001P	RF
R225401175-002		01Q	-001N	RF
R22540117500065		06J	-001P	RF
		41B	-040M	001
R22540117500265		01Q	-040N	001

- ITEM NOT ILLUSTRATED

ALPHA/NUMERIC INDEX

PART NUMBER	AIRLINE STOCK NUMBER	FIG NUMBER	ITEM NUMBER	TOTAL REQ'D
		06L	-001N	RF
R22540117500278		01Q	-150J	001
		19F	-001P	RF
		41B	-150J	001
R225401176-000		01N	-001P	RF
R225401183-000		41M	-001T	RF
R225401183-002		41N	-001S	RF
R225401183-004		42E	-001U	RF
R225401183-006		42J	-001T	RF
R225401183-008		41H	-001W	RF
R225401188-000		01B	-001Q	RF
R225401188-002		01D	-001Q	RF
R225401188-004		01C	-001Q	RF
R225401188-006		01F	-001S	RF
R22540118800065		01B	-040N	001
		01D	-040Q	001
		06A	-001P	RF
R22540118800078		01B	-150J	001
		01D	-150H	001
		19B	-001R	RF
R22540118800672		01F	-090K	001
		13	-001Q	RF
R225401192-000		41K	-001T	RF
R225401192-002		41W	-001V	RF
R225401195-000		01Z	-001P	RF
R22540119500065		01Z	-040K	001
		06Q	-001N	RF
R22540119500078		01Z	-150E	001
		19E	-001W	RF
		41K	-150D	001
		41N	-150L	001
		41P	-150E	001
		41R	-150F	001
		41X	-150H	001
		41Y	-150E	001

- ITEM NOT ILLUSTRATED

ALPHA/NUMERIC INDEX

PART NUMBER	AIRLINE STOCK NUMBER	FIG NUMBER	ITEM NUMBER	TOTAL REQ'D
		42G	-150F	001
		42K	-150F	001
		42S	-150G	001
R225401196-000		41	-001P	RF
R225401196-002		41K	-001N	RF
R225401196-004		41N	-001N	RF
R225401196-006		41R	-001P	RF
R225401196-008		41W	-001Q	RF
R225401196-010		41X	-001Q	RF
R225401196-012		42	-001P	RF
R225401196-014		42	-001Q	RF
R225401196-016		42	-001S	RF
R225401196-018		42E	-001P	RF
R225401196-020		42J	-001P	RF
R225401196-022		42J	-001R	RF
R225401196-024		42P	-001P	RF
R225401196-034		41K	-001P	RF
R225401196-036		41N	-001P	RF
R225401196-038		41R	-001Q	RF
R225401196-040		41X	-001R	RF
			-001S	RF
R225401196-042		42J	-001U	RF
R225401196-044		41W	-001W	RF
R225401196-046		41	-001S	RF
R225401196-048		41K	-001V	RF
R225401196-050		41N	-001T	RF
R225401196-052		41R	-001V	RF
R225401196-054		41W	-001X	RF
R225401196-056		41X	-001Y	RF
R225401196-058		42	-001W	RF
R225401196-060		42	-001X	RF
R225401196-062		42	-001Y	RF
R225401196-064		42E	-001X	RF
R225401196-066		42J	-001V	RF
R225401196-068		42J	-001W	RF

- ITEM NOT ILLUSTRATED

ALPHA/NUMERIC INDEX

PART NUMBER	AIRLINE STOCK NUMBER	FIG NUMBER	ITEM NUMBER	TOTAL REQ'D
R225401196-070		42P	-001T	RF
R22540119600665		06X	-001P	RF
		41R	-040P	001
R22540119600865		41W	-040K	001
		41X	-040L	001
		42	-040K	001
		48	-001M	RF
R22540119601865		42E	-040N	001
		42J	-040J	001
		42P	-040J	001
		48D	-001R	RF
R22540119603465		06P	-001S	RF
		41K	-040N	001
		41N	-040P	001
R22540119603865		06X	-001R	RF
		41R	-040S	001
R22540119604065		41X	-040M	001
		48	-001P	RF
R22540119604661		02A	-001R	RF
		41	-010J	001
R22540119604663		41K	-020C	001
		41N	-020F	001
		41R	-020D	001
		41W	-020E	001
		41X	-020E	001
		41	-020D	001
		42E	-020D	001
		42J	-020C	001
		42P	-020C	001
		42	-020E	001
		4	-001P	RF
R22540119604664		05B	-001R	RF
		41K	-030E	001
		41N	-030K	001
		41	-030F	001

- ITEM NOT ILLUSTRATED

ALPHA/NUMERIC INDEX

PART NUMBER	AIRLINE STOCK NUMBER	FIG NUMBER	ITEM NUMBER	TOTAL REQ'D
R22540119604665		06P	-001T	RF
		41K	-040Q	001
		41N	-040Q	001
		41	-040R	001
R22540119604666		07G	-001N	RF
		41K	-050L	001
		41N	-050L	001
		41	-050N	001
R22540119604671		12C	-001N	RF
		41K	-080F	001
		41	-080G	001
R22540119604672		13D	-001N	RF
		41K	-090M	001
		41N	-090M	001
		41R	-090M	001
		41W	-090K	001
		41	-090M	001
R22540119604673		14C	-001A	RF
		41K	-100C	001
		41N	-100F	001
		41R	-100D	001
		41W	-100E	001
		41X	-100D	001
		41	-100E	001
		42E	-100D	001
		42J	-100C	001
		42P	-100C	001
		42	-100E	001
R22540119604674		15G	-001S	RF
		41K	-110K	001
		41N	-110K	001
		41R	-110J	001
		41X	-110K	001
		41	-110H	001
R22540119604675		16B	-001Q	RF

- ITEM NOT ILLUSTRATED

ALPHA/NUMERIC INDEX

PART NUMBER	AIRLINE STOCK NUMBER	FIG NUMBER	ITEM NUMBER	TOTAL REQ'D
		41K	-120E	001
		41	-120H	001
R22540119604676		17C	-001R	RF
		41K	-130E	001
		41N	-130G	001
		41R	-130F	001
		41W	-130G	001
		41X	-130G	001
		41	-130J	001
		42E	-130G	001
		42J	-130G	001
		42	-130G	001
R22540119604678		19E	-001AB	RF
		41K	-150F	001
		41N	-150N	001
		41R	-150K	001
		41W	-150J	001
		41X	-150L	001
		41	-150J	001
		42E	-150G	001
		42J	-150F	001
		42P	-150E	001
		42	-150H	001
R22540119604679		20A	-001R	RF
		41K	-160D	001
		41N	-160G	001
		41R	-160E	001
		41W	-160F	001
		41X	-160E	001
		41	-160E	001
		42E	-160E	001
		42J	-160D	001
		42P	-160C	001
		42	-160F	001
R22540119604680		21A	-001K	RF

- ITEM NOT ILLUSTRATED

ALPHA/NUMERIC INDEX

PART NUMBER	AIRLINE STOCK NUMBER	FIG NUMBER	ITEM NUMBER	TOTAL REQ'D
		41K	-170C	001
		41N	-170G	001
		41	-170E	001
R22540119604681		22D	-001N	RF
		41	-180E	001
R22540119604683		26E	-001L	RF
		41	-200J	001
R22540119604861		02A	-001S	RF
		41K	-010D	001
		41N	-010J	001
R22540119604883		26K	-001H	RF
		41K	-200E	001
R22540119605071		12D	-001R	RF
		41N	-080G	001
		41R	-080F	001
		41W	-080F	001
		41X	-080G	001
R22540119605075		16B	-001P	RF
		41N	-120G	001
		41R	-120F	001
		41W	-120F	001
		41X	-120H	001
		42J	-120F	001
		42	-120G	001
R22540119605083		26M	-001H	RF
		41N	-200D	001
		41R	-200E	001
R22540119605261		02C	-001S	RF
		41R	-010F	001
		41W	-010F	001
		42	-010G	001
R22540119605261\		41X	-010F	001
R22540119605264		05C	-001P	RF
		41R	-030E	001
R22540119605265		06X	-001U	RF

- ITEM NOT ILLUSTRATED

ALPHA/NUMERIC INDEX

PART NUMBER	AIRLINE STOCK NUMBER	FIG NUMBER	ITEM NUMBER	TOTAL REQ'D
		41R	-040W	001
R22540119605266		07N	-001N	RF
		41R	-050M	001
R22540119605280		21B	-001N	RF
		41R	-170D	001
		41W	-170F	001
		41X	-170D	001
		42E	-170D	001
		42J	-170B	001
		42P	-170B	001
		42	-170E	001
R22540119605464		05G	-001N	RF
		41W	-030F	001
		41X	-030E	001
		42	-030G	001
R22540119605465		41W	-040N	001
		41X	-040Q	001
		42	-040P	001
		48	-001R	RF
R22540119605466		07R	-001Q	RF
		41W	-050K	001
R22540119605474		15C	-001N	RF
		41W	-110J	001
R22540119605483		26P	-001F	RF
		41W	-200H	001
		41X	-200F	001
		42	-200F	001
R22540119605666		07S	-001P	RF
		41X	-050J	001
		42	-050L	001
R22540119605672		13J	-001P	RF
		41X	-090L	001
		42	-090J	001
R22540119605681		22D	-001Q	RF
		41X	-180G	001

- ITEM NOT ILLUSTRATED

ALPHA/NUMERIC INDEX

PART NUMBER	AIRLINE STOCK NUMBER	FIG NUMBER	ITEM NUMBER	TOTAL REQ'D
R22540119605871		12G	-001Q	RF
		42E	-080G	001
		42J	-080E	001
		42P	-080D	001
		42	-080G	001
R22540119605874		15H	-001P	RF
		42	-110L	001
R22540119606066		07T	-001Q	RF
		42	-050M	001
R22540119606261		02C	-001T	RF
		42J	-010C	001
		42	-010H	001
R22540119606274		15K	-001F	RF
		42	-110M	001
R22540119606275		16E	-001C	RF
		42E	-120G	001
		42J	-120G	001
		42P	-120E	001
		42	-120H	001
R22540119606461		02B	-001M	RF
		42E	-010E	001
R22540119606465		42E	-040P	001
		42J	-040L	001
		42P	-040K	001
		48D	-001S	RF
R22540119606466		07W	-001Q	RF
		42E	-050P	001
		42J	-050K	001
R22540119606472		13N	-001P	RF
		42E	-090M	001
R22540119606474		15L	-001R	RF
		42E	-110K	001
		42J	-110F	001
		42P	-110J	001
R22540119606481		22D	-001R	RF

- ITEM NOT ILLUSTRATED

ALPHA/NUMERIC INDEX

PART NUMBER	AIRLINE STOCK NUMBER	FIG NUMBER	ITEM NUMBER	TOTAL REQ'D
		42E	-180F	001
		42J	-180E	001
		42P	-180B	001
R22540119606483		26R	-001N	RF
		42E	-200J	001
		42J	-200E	001
		42P	-200D	001
R22540119606672		13P	-001P	RF
		42J	-090J	001
R22540119606872		13Q	-001N	RF
		42J	-090K	001
		42P	-090G	001
R22540119607061		02D	-001U	RF
		42P	-010E	001
R22540119607066		42P	-050K	001
		49B	-001P	RF
R225401199-000		41X	-001P	RF
R225401199-002		41H	-001V	RF
R225401199-004		41R	-001T	RF
R225401199-006		41T	-001K	RF
R225401199-008		41W	-001T	RF
R225401199-010		42	-001U	RF
R225401199-012		42J	-001S	RF
R22540119900081		22D	-001H	RF
		41V	-180C	001
		41X	-180F	001
		42A	-180E	001
R22540119900082		41X	-190H	001
R22540119900082		23B	-001N	RF
		41V	-190D	001
		42A	-190C	001
R22540119900265		41H	-040S	001
		41J	-040Q	001
		48A	-001T	RF
R22540119900278		19E	-001Y	RF

- ITEM NOT ILLUSTRATED

ALPHA/NUMERIC INDEX

PART NUMBER	AIRLINE STOCK NUMBER	FIG NUMBER	ITEM NUMBER	TOTAL REQ'D
		41H	-150M	001
		41J	-150H	001
		41R	-150H	001
		41T	-150G	001
		41U	-150D	001
		41W	-150H	001
		42B	-150F	001
		42J	-150E	001
		42L	-150H	001
		42M	-150F	001
		42R	-150H	001
		42	-150G	001
R22540119900465		06X	-001T	RF
		41R	-040V	001
R22540119900665		06Y	-001R	RF
		41T	-040K	001
R22540119900865		06Z	-001V	RF
		41W	-040M	001
		42	-040N	001
R22540119901265		42J	-040K	001
		48L	-001P	RF
R225401600-000		41A	-001Q	RF
R225401600-002		41A	-001R	RF
R225401600-004		41S	-001Q	RF
R225401602-000		42L	-001S	RF
R225401603-000		41A	-001P	RF
R225401605-002		41P	-001S	RF
R225401605000		41J	-001S	RF
R22540160500065		06T	-001Q	RF
		41J	-040N	001
R22540160500272		13E	-001M	RF
		41P	-090M	001
R225401609-000		41Y	-001Q	RF
R22540160900065		06Z	-001R	RF
		41Y	-040L	001

- ITEM NOT ILLUSTRATED

ALPHA/NUMERIC INDEX

PART NUMBER	AIRLINE STOCK NUMBER	FIG NUMBER	ITEM NUMBER	TOTAL REQ'D
R225401611-000		42M	-001N	RF
R225401611-004		41V	-001Q	RF
R225401611-006		42A	-001R	RF
R225401611-008		41J	-001U	RF
R225401611-010		41U	-001G	RF
R225401611-012		42B	-001R	RF
R225401611-014		42L	-001P	RF
R225401611-016		42M	-001Q	RF
R225401611-018		42M	-001R	RF
R225401611-020		42R	-001Q	RF
R22540161100081		42L	-180C	001
R22540161100081		22D	-001G	RF
		42M	-180B	001
R22540161100082		23D	-001C	RF
		42L	-190E	001
		42M	-190D	001
R22540161101065		06Y	-001S	RF
		41U	-040G	001
R22540161101265		42B	-040Q	001
R22540161101265		06Z	-001W	RF
R22540161101465		42L	-040N	001
		42M	-040N	001
		48H	-001R	RF
R22540161102065		42R	-040Q	001
		48A	-001U	RF
R225401613-000		41J	-001T	RF
R22540161300065		06T	-001S	RF
		41J	-040P	001
R225401614-000		41L	-001P	RF
R22540161400065		06U	-001Q	RF
		41L	-040L	001
R22540161400066		07K	-001N	RF
		41L	-050L	001
R22540161400072		13G	-001H	RF
		41L	-090J	001

- ITEM NOT ILLUSTRATED

ALPHA/NUMERIC INDEX

PART NUMBER	AIRLINE STOCK NUMBER	FIG NUMBER	ITEM NUMBER	TOTAL REQ'D
R225401618-000		41K	-001S	RF
R225401618-002		41K	-001U	RF
R225401619-000		41J	-001V	RF
R225401619-002		41L	-001Q	RF
R22540161900081		22D	-001P	RF
		41J	-180C	001
		41K	-180D	001
		41L	-180C	001
		41N	-180E	001
		41R	-180C	001
		41W	-180E	001
		42	-180E	001
R225401622-000		41V	-001P	RF
R225401622-002		41Y	-001P	RF
R22540162200072		13H	-001N	RF
		41V	-090L	001
R22540162200074		15C	-001M	RF
		41V	-110F	001
R22540162200272		13K	-001M	RF
		41Y	-090L	001
R22540162200274		15G	-001P	RF
		41Y	-110H	001
R225401624-000		42H	-001S	RF
R225401625-000		41L	-001N	RF
R225401627-000		42K	-001P	RF
			-001Q	RF
R225401627-002		42S	-001Q	RF
R225401627-004		42Q	-001Q	RF
R22540162700065		42K	-040N	001
		42S	-040P	001
		48H	-001P	RF
R225401629-000		41P	-001R	RF
R225401629-002		41P	-001Q	RF
R22540162900065		06V	-001P	RF
		41P	-040N	001

- ITEM NOT ILLUSTRATED

ALPHA/NUMERIC INDEX

PART NUMBER	AIRLINE STOCK NUMBER	FIG NUMBER	ITEM NUMBER	TOTAL REQ'D
R22540162900278		19E	-001T	RF
		41P	-150D	001
		42C	-150D	001
R22540162900281		22D	-001K	RF
		41P	-180D	001
		42C	-180B	001
R22540162900282		23B	-001Q	RF
		41P	-190F	001
R225401639000		42B	-001P	RF
R22540163900065		06Z	-001Q	RF
		42B	-040N	001
		42D	-040P	001
R22540163900078		19E	-001P	RF
		41H	-150H	001
		41J	-150F	001
		41V	-150D	001
		41X	-150G	001
		41Y	-150D	001
		42A	-150C	001
		42B	-150D	001
		42D	-150F	001
		42H	-150F	001
		42M	-150C	001
R225401639002		42D	-001N	RF
R225401643-002		42G	-001N	RF
R225401643-004		42C	-001N	RF
R225401643-006		42M	-001S	RF
R225401643-008		42M	-001T	RF
R225401643000		42A	-001Q	RF
R22540164300065		06Z	-001P	RF
		42A	-040N	001
R22540164300265		06Z	-001S	RF
R22540164300265		42G	-040N	001
R22540164300482		23D	-001D	RF
		42C	-190C	001

- ITEM NOT ILLUSTRATED

ALPHA/NUMERIC INDEX

PART NUMBER	AIRLINE STOCK NUMBER	FIG NUMBER	ITEM NUMBER	TOTAL REQ'D
R22540164300872		13P	-001N	RF
		42M	-090L	001
R225401646-000		41Y	-001S	RF
R225401646-002		42K	-001R	RF
R22540164600265		42K	-040P	001
		48H	-001Q	RF
R225401647-000		41Y	-001R	RF
R22540164700065		42B	-040P	001
R22540164700065		06Z	-001U	RF
		41Y	-040M	001
		42A	-040P	001
R225401648-000		41Z	-001P	RF
R225401648-002		42A	-001T	RF
R225401648-004		42H	-001Q	RF
R225401648-006		42L	-001Q	RF
R225401648-008		42H	-001T	RF
R225401649-000		42H	-001R	RF
R225401656-000		42B	-001Q	RF
R225401656-002		42A	-001S	RF
R225401658-000		42C	-001Q	RF
R225401662-000		42C	-001P	RF
R225401662-002		42G	-001R	RF
R22540166200061		02C	-001R	RF
		42C	-010C	001
		42G	-010D	001
R22540166200063		42C	-020B	001
		42G	-020E	001
		42L	-020D	001
		42T	-020F	001
		4	-001N	RF
R22540166200064		05F	-001L	RF
		42C	-030D	001
		42G	-030H	001
		42L	-030E	001
		42T	-030G	001

- ITEM NOT ILLUSTRATED

ALPHA/NUMERIC INDEX

PART NUMBER	AIRLINE STOCK NUMBER	FIG NUMBER	ITEM NUMBER	TOTAL REQ'D
R22540166200065		42C	-040M	001
		42G	-040Q	001
		48B	-001P	RF
R22540166200066		07U	-001N	RF
		42C	-050L	001
		42G	-050M	001
R22540166200071		12D	-001Q	RF
		42C	-080E	001
		42G	-080H	001
R22540166200072		13J	-001N	RF
		42C	-090J	001
		42G	-090M	001
R22540166200073		14	-001P	RF
		42C	-100B	001
		42G	-100E	001
		42L	-100D	001
		42T	-100F	001
R22540166200074		15G	-001R	RF
		42C	-110E	001
		42G	-110L	001
R22540166200075		16B	-001N	RF
		42C	-120E	001
R22540166200076		17C	-001P	RF
		42C	-130E	001
		42G	-130H	001
R22540166200078		19E	-001Z	RF
		42C	-150E	001
		42G	-150H	001
		42L	-150J	001
		42T	-150K	001
R22540166200079		20A	-001Q	RF
		42C	-160C	001
		42G	-160F	001
		42L	-160E	001
		42T	-160F	001

- ITEM NOT ILLUSTRATED

ALPHA/NUMERIC INDEX

PART NUMBER	AIRLINE STOCK NUMBER	FIG NUMBER	ITEM NUMBER	TOTAL REQ'D
R22540166200080		21B	-001M	RF
		42C	-170B	001
		42G	-170C	001
		42L	-170D	001
		42T	-170E	001
R22540166200275		16E	-001B	RF
		42G	-120G	001
		42L	-120J	001
		42T	-120G	001
R225401671-000		42N	-001Q	RF
R225401671-002		42S	-001R	RF
R22540167100065		42N	-040Q	001
		42S	-040Q	001
		48G	-001Q	RF
R22540167100078		19H	-001J	RF
		42N	-150J	001
		42S	-150H	001
R225401673-000		42G	-001P	RF
R225401673-002		42H	-001P	RF
R225401673-004		42K	-001S	RF
R225401673-006		42Q	-001P	RF
R22540167300065		42G	-040P	001
		48G	-001P	RF
R22540167300265		42H	-040M	001
		42Q	-040M	001
		48A	-001R	RF
R22540167300465		42K	-040Q	001
		48A	-001S	RF
R225401675-000		42F	-001N	RF
R22540167500065		42F	-040M	001
		48F	-001E	RF
R22540167500078		19H	-001H	RF
		42F	-150F	001
R225401676-000		42H	-001N	RF
R22540167600081		22D	-001J	RF

- ITEM NOT ILLUSTRATED

ALPHA/NUMERIC INDEX

PART NUMBER	AIRLINE STOCK NUMBER	FIG NUMBER	ITEM NUMBER	TOTAL REQ'D
		42H	-180C	001
R22540167600082		23B	-001P	RF
		42H	-190D	001
R225401683-000		42G	-001Q	RF
R225401685-000		42K	-001T	RF
R225401685-002		42N	-001R	RF
R225401688-000		42L	-001N	RF
R22540168800078		19E	-001Q	RF
		42L	-150G	001
		42N	-150H	001
R225401689-004		42L	-001R	RF
R225401689-006		42T	-001P	RF
R22540168900461		02B	-001L	RF
		42L	-010E	001
R22540168900465		42L	-040P	001
		42T	-040Q	001
		48K	-001Q	RF
R22540168900466		07X	-001P	RF
		42L	-050K	001
		42T	-050N	001
R22540168900471		12G	-001P	RF
		42L	-080H	001
		42T	-080F	001
R22540168900472		13N	-001N	RF
		42L	-090K	001
		42T	-090J	001
R22540168900474		15L	-001Q	RF
		42L	-110F	001
R22540168900476		17C	-001Q	RF
		42L	-130H	001
		42T	-130F	001
R22540168900661		02D	-001T	RF
		42T	-010F	001
R22540168900674		15Q	-001L	RF
		42T	-110G	001

- ITEM NOT ILLUSTRATED

ALPHA/NUMERIC INDEX

PART NUMBER	AIRLINE STOCK NUMBER	FIG NUMBER	ITEM NUMBER	TOTAL REQ'D
R225401691-000		42M	-001P	RF
R225401691-002		42R	-001P	RF
R22540169100065		42M	-040M	001
		42R	-040P	001
		48K	-001P	RF
R225401693-000		41S	-001P	RF
R225401697-000		42N	-001P	RF
R225401697-002		42T	-001N	RF
R22540169700065		42N	-040P	001
		48J	-001N	RF
R22540169700265		42T	-040P	001
		48J	-001Q	RF
R225401803-000		42Q	-001R	RF
R225401803-002		42U	-001L	RF
R225401808-000		42R	-001N	RF
R22540180800065		42R	-040N	001
		42S	-040N	001
		48A	-001P	RF
R22540180800078		19F	-001Q	RF
		42R	-150F	001
		42S	-150F	001
R225401811-000		42R	-001R	RF
R225401814-000		42S	-001P	RF
R254H150210000		21	-140C	001
R254H155000664		01A	-030D	001
			-030G	001
		01B	-030C	001
			-030F	001
		01C	-030C	001
		01E	-030D	001
		01M	-030E	001
		01R	-030B	001
		05B	-001M	RF
			-001N	RF
		1	-030C	001

- ITEM NOT ILLUSTRATED

ALPHA/NUMERIC INDEX

PART NUMBER	AIRLINE STOCK NUMBER	FIG NUMBER	ITEM NUMBER	TOTAL REQ'D
		41T	-030E	001
R292900390-000		14C	-040A	001
R381H000400200		15	-080F	001
R381H000400800		15	-080E	001
R381H000420200		15	-100D	001
R381H000420800		15	-100C	001
RF1208		15M	320A	001
RNF100-1-3-16-9		27A	-250A	AR
		27B	-250A	AR
		27C	-250A	AR
		27D	-490A	001
		27E	-370A	001
RNF100-1-8-9		27	-340A	AR
RZ042X		26A	210A	001
		26B	197A	001
		26	210A	001
S00992-012-00		13C	-060H	001
		13H	-060D	001
		13K	-060F	001
		13L	-060C	001
		13N	-020F	001
		13Q	-040F	001
		13	-060L	001
S011695		13	-060M	001
S017403		13J	-060M	001
		13N	-020K	001
S07489-001P2		13A	-060C	001
		13E	-060L	001
		13K	-060H	001
		13Q	-040C	001
S125400200-286		13W	025A	001
S125400206-086		13N	-020L	001
		13P	-040N	001
		13Q	-040N	001
S125400206-188		13P	-040M	001

- ITEM NOT ILLUSTRATED

ALPHA/NUMERIC INDEX

PART NUMBER	AIRLINE STOCK NUMBER	FIG NUMBER	ITEM NUMBER	TOTAL REQ'D
S125400465-500		12B	-010G	001
		12D	-010L	001
		12E	-010M	001
		12G	-010N	001
		12	-010J	001
S2701		13C	-060G	001
		13E	-060F	001
S2F212-25		48E	-230C	001
S2F212-51		06D	-200D	001
S2F212-85		06B	-170F	001
		06D	200A	001
		06E	-200D	001
		06F	200A	001
		06G	-200B	001
		6	-155G	001
S3510		13G	-060C	001
		13L	-060F	001
		13Q	-040J	001
		13S	-040J	001
S3595		13E	-060D	001
		13J	-060J	001
		13P	-040J	001
S6340		13P	-040E	001
S7224		06A	111A	002
		06B	111A	002
		06C	120A	002
		06D	120A	002
			320A	002
		06E	120A	002
		06F	120A	002
			350A	002
		06G	120A	002
		06H	120A	002
			310A	002
			390A	002

- ITEM NOT ILLUSTRATED

ALPHA/NUMERIC INDEX

PART NUMBER	AIRLINE STOCK NUMBER	FIG NUMBER	ITEM NUMBER	TOTAL REQ'D
		06J	130A	002
			400A	002
		06K	130A	002
			320A	002
		06L	130A	002
			350A	002
		06M	130A	002
			350A	002
		06N	130A	002
			350A	002
		06P	130A	002
			360A	002
		06Q	130A	002
			360A	002
		06R	130A	004
			350A	002
		06T	130A	002
			350A	002
		06U	130A	002
			320A	001
		06V	130A	002
		06W	150A	002
			350A	002
		06X	130A	002
			360A	002
		06Y	280A	001
			340A	002
		06Z	280A	001
		48A	130A	002
		48B	140A	002
		48C	150A	002
		48D	280A	002
		48E	150A	002
		48F	150A	002
		48G	150A	002

- ITEM NOT ILLUSTRATED

ALPHA/NUMERIC INDEX

PART NUMBER	AIRLINE STOCK NUMBER	FIG NUMBER	ITEM NUMBER	TOTAL REQ'D
		48H	150A	002
		48J	300A	001
		48K	150A	002
		48L	150A	002
		48M	150A	002
		48N	150A	002
		48	280A	001
		6	101A	002
			280A	002
S7862		13S	-040L	001
S7921		13S	-040K	001
S7961		13L	-060J	001
S8426		13P	-040L	001
SACV11592-200		12A	110A	004
			130A	002
		12B	110A	004
			130A	002
		12	065A	004
			067A	002
SACV11592-202		12C	110A	004
			130A	002
		12D	110A	004
			130A	002
		12E	140A	004
			160A	002
		12F	140A	004
			160A	002
		12G	140A	004
			160A	002
		12H	160A	004
			190A	002
		12J	090A	004
			120A	002
SACV11593-200		12A	140A	006
		12B	140A	006

- ITEM NOT ILLUSTRATED

ALPHA/NUMERIC INDEX

PART NUMBER	AIRLINE STOCK NUMBER	FIG NUMBER	ITEM NUMBER	TOTAL REQ'D
		12	068A	006
SACV11593-212		12C	140A	006
		12D	140A	006
		12E	170A	006
		12F	170A	006
		12G	170A	008
		12H	200A	008
		12J	140A	008
SACV11593-222		12G	180A	002
		12H	210A	002
		12J	130A	002
SACV11594-200		12A	080A	002
		12B	080A	002
		12C	080A	002
		12D	080A	002
		12E	110A	002
		12F	110A	002
		12G	110A	002
		12H	110A	002
		12J	160A	001
			190A	001
		12	062A	002
SACV11595-200		12A	070A	002
		12B	070A	002
		12C	070A	002
		12D	070A	002
		12E	100A	002
		12F	100A	002
		12G	100A	002
		12H	100A	002
		12J	170A	001
			200A	001
		12	061A	002
SACV11596-200		12A	090A	002
		12B	090A	002

- ITEM NOT ILLUSTRATED

ALPHA/NUMERIC INDEX

PART NUMBER	AIRLINE STOCK NUMBER	FIG NUMBER	ITEM NUMBER	TOTAL REQ'D
		12C	090A	002
		12D	090A	002
		12E	120A	002
		12F	120A	002
		12G	125A	002
		12H	130A	002
		12	063A	002
SACV11603-000		12A	120A	001
		12B	120A	001
		12	066A	001
SACV11603-010		12C	120A	001
		12D	120A	001
		12E	150A	001
		12F	150A	001
SACV11604-000		12A	100A	001
		12B	100A	001
		12C	100A	001
		12D	100A	001
		12E	130A	001
		12F	130A	001
		12G	135A	001
		12H	150A	001
		12	064A	001
SBM004F		13J	060A	001
		13M	-060D	001
		13Q	-040B	001
SC0TCH4032-25		07S	167A	AR
		07T	167A	AR
		07W	177A	AR
		48D	510A	AR
		48N	430A	AR
		49B	177A	AR
SC0TCH4930-50		13N	015A	AR
		13P	030A	AR
		13Q	030A	AR

- ITEM NOT ILLUSTRATED

ALPHA/NUMERIC INDEX

PART NUMBER	AIRLINE STOCK NUMBER	FIG NUMBER	ITEM NUMBER	TOTAL REQ'D
		13R	020A	AR
		13S	030A	AR
		13T	030A	AR
		13U	030A	AR
SHE2537-32-060D		13E	-060K	001
		13H	-060H	001
		13J	-060F	001
SJ5012WHITE		05A	090A	001
		5	100A	001
SM1275-1KNM04		06A	390A	001
		06C	390A	001
		06G	370A	001
		06H	480A	001
		06J	560A	001
		06K	430A	001
		06M	460A	001
		06P	440A	001
		06U	460A	001
		06V	430A	001
		06W	460A	001
		06X	460A	001
		10	140A	001
		48A	400A	001
		48B	440A	001
		48C	450A	001
		48D	400A	001
		48E	430A	001
		48F	410A	001
		48G	430A	001
		48H	420A	001
		48J	420A	001
		48K	420A	001
		48L	420A	001
		48M	420A	001
		48N	500A	001

- ITEM NOT ILLUSTRATED

ALPHA/NUMERIC INDEX

PART NUMBER	AIRLINE STOCK NUMBER	FIG NUMBER	ITEM NUMBER	TOTAL REQ'D
		6	370A	001
SP4863-20		26A	160A	001
		26B	192A	001
		26	160A	001
SPACERETAINER		06H	-240F	001
TMS1-2-10-9		31A	190A	003
		31	120A	003
TMS1-8-10-9		26V	-415A	006
		27D	130A	004
		27E	110A	004
		31A	-130A	010
		31B	-130A	010
		31C	-130A	004
		31	-110A	AR
TMS1-8ME400		27A	-300A	047
		27B	-300A	047
		27C	-300A	047
TMS1-8ME500		27A	-290A	018
		27B	-290A	018
		27C	-290A	018
TMS3-16-10-9		27D	-380A	004
		27E	-270A	004
		31C	-110A	003
TMS3-32-10-9		27D	-370A	054
		27E	-260A	054
		31A	-110A	052
		31B	-110A	052
TMS3-4		27A	320A	001
		27B	320A	001
		27C	320A	001
TMS3-4-10-9		26V	-410A	001
		27D	580A	001
		27E	460A	001
		31A	-120A	001
		31B	-120A	001

- ITEM NOT ILLUSTRATED

ALPHA/NUMERIC INDEX

PART NUMBER	AIRLINE STOCK NUMBER	FIG NUMBER	ITEM NUMBER	TOTAL REQ'D
		31C	-120A	001
TMS3-8-10-9		31C	-140A	006
TRB12BCA		15G	330A	001
		15H	330A	001
		15L	-330B	001
		15Q	390A	001
TRBASE125		15A	070A	001
		15C	-182A	001
		15F	235A	001
		15G	-237A	001
		15H	340A	001
		15K	-240C	001
		15L	330A	001
			331A	001
		15Q	-390B	001
		15R	370A	001
TRBASE125C		15L	-330D	001
TRBASE125G1		15F	-235B	001
		15G	235A	001
		15K	-240B	001
		15L	-330C	001
TRBASE125GA		15K	240A	001
TRBASE15		15A	-070B	001
TRBR10AF		15G	-230E	001
		15K	230A	001
		15L	-320D	001
TRBR10EG		15L	-320E	001
TRBR10NW		15F	-230C	001
		15L	-320C	001
TRBR10SAL		15R	220A	001
TRBR10UA7		15G	-230K	001
		15L	-320F	001
		15Q	-380B	001
TRBR10W		15A	-080B	001
		15K	-230B	001

- ITEM NOT ILLUSTRATED

ALPHA/NUMERIC INDEX

PART NUMBER	AIRLINE STOCK NUMBER	FIG NUMBER	ITEM NUMBER	TOTAL REQ'D
		15M	-230B	001
TRBR10WE		15C	-180E	001
		15G	-230J	001
		15H	-230D	001
TRBR30SB		15L	320A	001
TSTMNR502-0		27	-350A	AR
VD125		18	310A	001
Y1335		19A	-264A	002
		19B	-214A	002
		19C	-264A	002
		19D	-374A	002
		19E	-274A	002
		19F	-310A	002
		19H	-410A	002
		19J	-370A	002
		19K	-370A	002
Y1336		19A	-265A	002
		19B	-215A	002
		19C	-265A	002
		19D	-375A	002
		19E	-275A	002
		19F	-320A	002
		19H	-420A	002
		19J	-380A	002
		19K	-380A	002
Y1827		19A	-267A	001
		19B	-217A	001
		19C	-267A	001
		19D	-377A	001
		19E	-277A	001
		19F	-340A	001
		19H	-440A	001
		19J	-400A	001
		19K	-400A	001
Y1853		19A	-266A	002

- ITEM NOT ILLUSTRATED

ALPHA/NUMERIC INDEX

PART NUMBER	AIRLINE STOCK NUMBER	FIG NUMBER	ITEM NUMBER	TOTAL REQ'D
		19B	-216A	002
		19C	-266A	002
		19D	-376A	002
		19E	-276A	002
		19F	-330A	002
		19H	-430A	002
		19J	-390A	002
		19K	-390A	002
Y4727DA12-14		19E	-273E	001
Y4727DA12-16		19H	-400E	001
Y4727DA12-2		19F	-300E	001
Y4727DA12-2A		19F	-300D	001
Y4727DA12-5		19F	-300F	001
Y4727DA12-7		19H	-400D	001
Y4727DA2-12		19A	-263B	001
		19D	-373B	001
		19E	-273B	001
Y4727DA2-49		19E	-273F	001
		19F	-300C	001
		19H	-400B	001
		19K	-360A	001
Y4727DA2-68		19F	-300G	001
Y4727DA2-8		19A	-263A	001
		19B	-213A	001
		19C	-263A	001
		19D	-373A	001
		19E	-273A	001
		19F	-300A	001
		19H	-400A	001
		19J	-360A	001
Y4727DA3-32		19E	-273C	001
Y4727DA3-9		19E	-273D	001
		19F	-300B	001
Y4727DA7-25		19H	-400C	001
Z02HV08-1		22A	160A	001

- ITEM NOT ILLUSTRATED

ALPHA/NUMERIC INDEX

PART NUMBER	AIRLINE STOCK NUMBER	FIG NUMBER	ITEM NUMBER	TOTAL REQ'D
ZCV241		22B	190A	001
		22C	180A	001
		22D	220A	001
		22E	220A	001
		22F	240A	001
		22G	200A	001
		22H	240A	001
		22J	130A	001
		22	180A	001
		23A	100A	001
		23	090A	001

- ITEM NOT ILLUSTRATED

THIS PAGE IS INTENTIONALLY LEFT BLANK

DETAILED PARTS LIST

THIS PAGE IS INTENTIONALLY LEFT BLANK

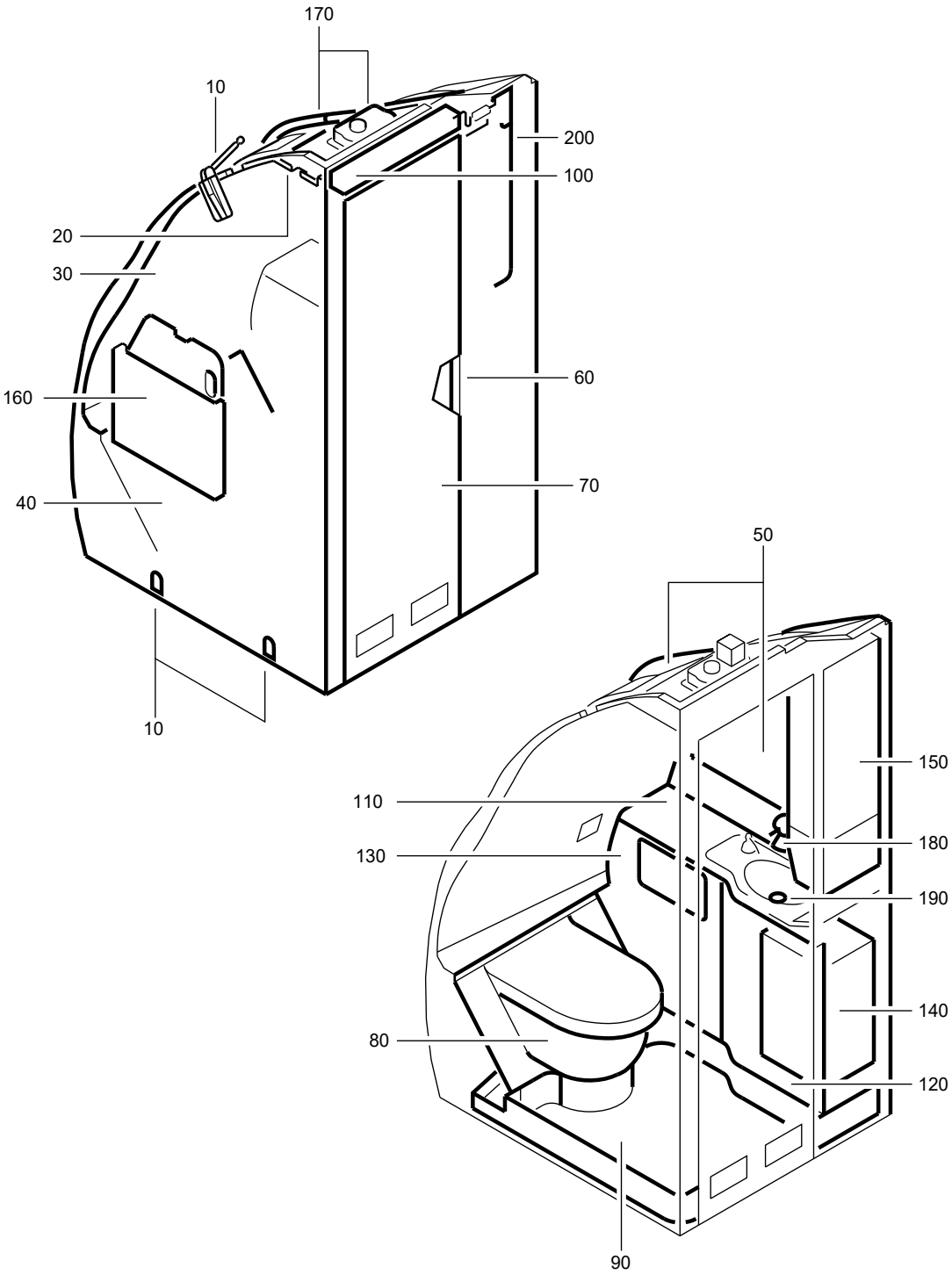

F_PL_254151_01_0_01_00

LAVATORY A ASSY
Figure 1/EN254151SHEET01001

FIG. ITEM	PART NUMBER	AIRLINE STOCK NUMBER	NOMENCLATURE 1234567	EFF CODE	UNITS PER ASSY
01					
-001A	D2549010500000		. LAVATORY A ASSY SEE SIL 25-117 FOR DET		RF
-001B	D2549020500000		. LAVATORY A ASSY SEE SIL 25-117 FOR DET		RF
-001C	D2549020500200		. LAVATORY A ASSY SEE SIL 25-117 FOR DET		RF
-001D	D2549010500400		. LAVATORY A ASSY SEE SIL 25-117 FOR DET		RF
-001E	D2549010500600		. LAVATORY A ASSY SEE SIL 25-117 FOR DET PRE VSB A2-254-25-080		RF
-001F	D2549020500400		. LAVATORY A ASSY SEE SIL 25-117 FOR DET		RF
-001G	D2549010500800		. LAVATORY A ASSY SEE SIL 25-117 FOR DET		RF
-001H	D2549020501800		. LAVATORY A ASSY SEE SIL 25-117 FOR DET		RF
-001J	D2549020500800		. LAVATORY A ASSY SEE SIL 25-117 FOR DET		RF
-001K	D2549020502000		. LAVATORY A ASSY SEE SIL 25-117 FOR DET		RF
-001L	D2549020501200		. LAVATORY A ASSY SEE SIL 25-117 FOR DET		RF
-001M	D2549030500200		. LAVATORY A ASSY SEE SIL 25-117 FOR DET		RF
-001N	D2549020501200		. LAVATORY A ASSY POST SB 25-1170 SEE SIL 25-117 FOR DET		RF

- ITEM NOT ILLUSTRATED

FIG. ITEM	PART NUMBER	AIRLINE STOCK NUMBER	NOMENCLATURE 1234567		EFF CODE	UNITS PER ASSY
-001P	D2549030500200		. LAVATORY A ASSY SEE SIL 25-117 FOR DET			RF
-001Q	R225401146-000		. LAVATORY A ASSY SEE SIL 25-117 FOR DET POST VSB A2-254-25-080			RF
010A	D2549010500061		. . ATTACHMENT-LAVATORY used on 001A, 001D, 001E, 001F, 001G, 001H, 001J, 001K, 001L, 001M, 001N, 001P, 001Q SEE 25-41-51-020 FOR DET	NP		001
-010B	D2549020500661		. . ATTACHMENT-LAVATORY used on 001B SEE 25-41-51-020 FOR DET	NP		001
-010C	D2549020610061		. . ATTACHMENT-LAVATORY used on 001C SEE 25-41-51-02D FOR DET	NP		001
020A	D2549010500063		. . PANEL-CEILING used on 001A, 001C, 001D, 001E, 001F, 001G, 001H, 001J, 001K, 001L, 001M, 001N, 001P, 001Q SEE 25-41-51-040 FOR DET	NP		001
-020B	D2549020500063		. . PANEL-CEILING used on 001B SEE 25-41-51-040 FOR DET	NP		001
030A	D2549010500064		. . WALL-REAR used on 001A, 001C, 001E, 001F, 001G, 001H, 001J, 001K, 001L, 001N, 001Q SEE 25-41-51-050 FOR DET	NP		001
-030B	D2549020500064		. . WALL-REAR used on 001B SEE 25-41-51-050 FOR DET	NP		001

- ITEM NOT ILLUSTRATED

FIG. ITEM	PART NUMBER	AIRLINE STOCK NUMBER	NOMENCLATURE 1234567		EFF CODE	UNITS PER ASSY
-030C	R254H155000664		. . WALL-REAR used on 001M, 001P SEE 25-41-51-05B FOR DET	NP		001
-030D	D2549010509064		. . WALL-REAR used on 001D SEE 25-41-51-050 FOR DET	NP		001
040A	D2549010500065		. . WALL-SIDE used on 001A SEE 25-41-51-060 FOR DET	NP		001
-040B	D2549020500065		. . WALL-SIDE used on 001B SEE 25-41-51-060 FOR DET	NP		001
-040C	D2549020500265		. . WALL-SIDE used on 001C SEE 25-41-51-060 FOR DET	NP		001
-040D	D2549010500465		. . WALL-SIDE used on 001D SEE 25-41-51-060 FOR DET	NP		001
-040E	D2549010500665		. . WALL-SIDE PRE VSB A2-254-25-080 used on 001E SEE 25-41-51-060 FOR DET	NP		001
-040F	D2549020500465		. . WALL-SIDE used on 001F, 001J, 001L, 001N SEE 25-41-51-060 FOR DET	NP		001
-040G	D2549020501865		. . WALL-SIDE used on 001H, 001K SEE 25-41-51-060 FOR DET	NP		001
-040H	D2549010500865		. . WALL-SIDE used on 001G SEE 25-41-51-060 FOR DET	NP		001

- ITEM NOT ILLUSTRATED

FIG. ITEM	PART NUMBER	AIRLINE STOCK NUMBER	NOMENCLATURE 1234567	EFF CODE	UNITS PER ASSY
-040J	D2549030500265		. . WALL-SIDE NP used on 001M, 001P SEE 25-41-51-06A FOR DET		001
-040K	R22540114600065		. . WALL-SIDE NP POST VSB A2-254-25-080 used on 001Q SEE 25-41-51-060 FOR DET		001
050A	D2549010500066		. . HOUSING NP used on 001A, 001G SEE 25-41-51-070 FOR DET		001
-050B	D2549020500066		. . HOUSING NP used on 001B SEE 25-41-51-070 FOR DET		001
-050C	D2549020500266		. . HOUSING NP used on 001C, 001F, 001H, 001J, 001K, 001L, 001N SEE 25-41-51-070 FOR DET		001
-050D	D2549010500466		. . HOUSING NP used on 001D SEE 25-41-51-070 FOR DET		001
-050E	D2549010500666		. . HOUSING NP used on 001E, 001Q SEE 25-41-51-070 FOR DET		001
-050F	D2549030500266		. . HOUSING NP used on 001M, 001P SEE 25-41-51-07A FOR DET		001
060A	D2549010500069		. . DOOR INSTL NP used on 001A, 001B, 001C, 001D, 001E, 001F, 001G, 001H, 001J, 001K, 001L, 001M, 001N, 001P, 001Q SEE 25-41-51-100 FOR DET		001

- ITEM NOT ILLUSTRATED

FIG. ITEM	PART NUMBER	AIRLINE STOCK NUMBER	NOMENCLATURE 1234567	EFF CODE	UNITS PER ASSY
070A	A225400270-500		. . DOOR ASSY-SINGLE used on 001A, 001G SEE 25-41-51-110 FOR DET		001
-070B	A225400270-504		. . DOOR ASSY-SINGLE used on 001B SEE 25-41-51-110 FOR DET		001
-070C	A225400270-506		. . DOOR ASSY-SINGLE used on 001C, 001F, 001H, 001J, 001K, 001L, 001N SEE 25-41-51-110 FOR DET		001
-070D	A225400270-502		. . DOOR ASSY-SINGLE used on 001D SEE 25-41-51-110 FOR DET		001
-070E	A225400270-508		. . DOOR ASSY-SINGLE used on 001E, 001Q SEE 25-41-51-110 FOR DET		001
-070F	A225400270-512		. . DOOR ASSY-SINGLE used on 001M, 001P SEE 25-41-51-110 FOR DET		001
080A	D2549010500071		. . TOILET UNIT AND TOILET SHROUD NP used on 001A, 001G SEE 25-41-51-120 FOR DET		001
-080B	D2549020500071		. . TOILET UNIT AND TOILET SHROUD NP used on 001B SEE 25-41-51-12A FOR DET		001
-080C	D2549020500471		. . TOILET UNIT AND TOILET SHROUD NP used on 001F, 001H, 001J, 001N SEE 25-41-51-120 FOR DET		001

- ITEM NOT ILLUSTRATED

FIG. ITEM	PART NUMBER	AIRLINE STOCK NUMBER	NOMENCLATURE 1234567	EFF CODE	UNITS PER ASSY
-080D	D2549010500671		. . TOILET UNIT AND TOILET SHROUD NP used on 001E, 001Q SEE 25-41-51-120 FOR DET		001
-080E	D2549010501071		. . TOILET UNIT AND TOILET SHROUD NP used on 001D, 001M, 001P SEE 25-41-51-12B FOR DET		001
-080F	D2549020500271		. . TOILET UNIT AND TOILET SHROUD NP used on 001C, 001K, 001L SEE 25-41-51-12B FOR DET		001
090A	D2549010500072		. . PAN-FLOOR NP used on 001A, 001G SEE 25-41-51-130 FOR DET		001
-090B	D2549020500072		. . PAN-FLOOR NP used on 001B SEE 25-41-51-130 FOR DET		001
-090C	D2549020500272		. . PAN-FLOOR NP used on 001C, 001F, 001H, 001J, 001K, 001L, 001N SEE 25-41-51-130 FOR DET		001
-090D	D2549010500472		. . PAN-FLOOR NP used on 001D SEE 25-41-51-130 FOR DET		001
-090E	D2549010500672		. . PAN-FLOOR NP used on 001E, 001Q SEE 25-41-51-130 FOR DET		001
-090F	D2549010501072		. . PAN-FLOOR NP used on 001M, 001P SEE 25-41-51-130 FOR DET		001

- ITEM NOT ILLUSTRATED

FIG. ITEM	PART NUMBER	AIRLINE STOCK NUMBER	NOMENCLATURE 1234567		EFF CODE	UNITS PER ASSY
100A	D2549010500073		. . LIGHT-DOOR used on 001A, 001C, 001D, 001E, 001F, 001G, 001H, 001J, 001K, 001L, 001M, 001N, 001P, 001Q SEE 25-41-51-140 FOR DET	NP		001
-100B	D2549020500073		. . LIGHT-DOOR used on 001B SEE 25-41-51-140 FOR DET	NP		001
110A	D2549010500074		. . WASHBASIN UNIT used on 001A, 001G SEE 25-41-51-150 FOR DET	NP		001
-110B	D2549020500074		. . WASHBASIN UNIT used on 001B SEE 25-41-51-15A FOR DET	NP		001
-110C	D2549020500274		. . WASHBASIN UNIT used on 001C, 001E, 001F, 001H, 001J, 001K, 001L, 001M, 001N, 001P, 001Q SEE 25-41-51-150 FOR DET	NP		001
-110D	D2549010500474		. . WASHBASIN UNIT used on 001D SEE 25-41-51-15A FOR DET	NP		001
120A	D2549010500075		. . DOOR ASSY-WASHBASIN UNIT used on 001A, 001G SEE 25-41-51-160 FOR DET	NP		001
-120B	D2549020500075		. . DOOR ASSY-WASHBASIN UNIT used on 001B SEE 25-41-51-160 FOR DET	NP		001

- ITEM NOT ILLUSTRATED

FIG. ITEM	PART NUMBER	AIRLINE STOCK NUMBER	NOMENCLATURE 1234567	EFF CODE	UNITS PER ASSY
-120C	D2549020500275		. . DOOR ASSY-WASHBASIN UNIT NP used on 001C, 001F, 001H, 001J, 001K, 001L, 001N SEE 25-41-51-160 FOR DET		001
-120D	D2549010500475		. . DOOR ASSY-WASHBASIN UNIT NP used on 001D, 001E, 001M, 001P, 001Q SEE 25-41-51-160 FOR DET		001
130A	D2549010500076		. . PANEL ASSY-WASHBASIN UNIT NP used on 001A, 001G SEE 25-41-51-170 FOR DET		001
-130B	D2549020500076		. . PANEL ASSY-WASHBASIN UNIT NP used on 001B SEE 25-41-51-17A FOR DET		001
-130C	D2549020500276		. . PANEL ASSY-WASHBASIN UNIT NP used on 001C, 001F, 001H, 001J, 001K, 001L, 001N SEE 25-41-51-17A FOR DET		001
-130D	D2549010500476		. . PANEL ASSY-WASHBASIN UNIT NP used on 001D, 001E, 001M, 001P, 001Q SEE 25-41-51-17A FOR DET		001
140A	D2549010500077		. . BIN-WASTE,CHUTE-WASTE AND EXTINGUISHER-FIRE NP used on 001A, 001D, 001E, 001F, 001G, 001H, 001J, 001K, 001L, 001M, 001N, 001P, 001Q SEE 25-41-51-180 FOR DET		001

- ITEM NOT ILLUSTRATED

FIG. ITEM	PART NUMBER	AIRLINE STOCK NUMBER	NOMENCLATURE 1234567		EFF CODE	UNITS PER ASSY
-140B	D2549020500077		. . BIN-WASTE,CHUTE-WASTE AND EXTINGUISHER-FIRE used on 001B, 001C SEE 25-41-51-180 FOR DET	NP		001
150A	D2549010500078		. . CABINET-SERVICE used on 001A, 001G SEE 25-41-51-190 FOR DET	NP		001
-150B	D2549020500078		. . CABINET-SERVICE used on 001B SEE 25-41-51-19D FOR DET	NP		001
-150C	D2549020500278		. . CABINET-SERVICE used on 001C SEE 25-41-51-19A FOR DET	NP		001
-150D	D2549010502878		. . CABINET-SERVICE used on 001D SEE 25-41-51-19B FOR DET	NP		001
-150E	D2549010500678		. . CABINET-SERVICE PRE VSB A2-254-25-080 used on 001E, 001F, 001H, 001J, 001K, 001L SEE 25-41-51-19B FOR DET	NP		001
-150F	D2549010501078		. . CABINET-SERVICE used on 001M, 001P SEE 25-41-51-19C FOR DET	NP		001
-150G	D2549020500478		. . CABINET-SERVICE used on 001N SEE 25-41-51-19B FOR DET	NP		001
-150H	R22540114600078		. . CABINET-SERVICE POST VSB A2-254-25-080 used on 001Q SEE 25-41-51-19B FOR DET	NP		001

- ITEM NOT ILLUSTRATED

FIG. ITEM	PART NUMBER	AIRLINE STOCK NUMBER	NOMENCLATURE 1234567	EFF CODE	UNITS PER ASSY
160A	D2549010500079		. . TABLE-NURSING NP used on 001A, 001G SEE 25-41-51-200 FOR DET		001
-160B	D2549020500079		. . TABLE-NURSING NP used on 001B SEE 25-41-51-200 FOR DET		001
-160C	D2549010500479		. . TABLE-NURSING NP used on 001C, 001E, 001F, 001H, 001J, 001K, 001L, 001N, 001Q SEE 25-41-51-200 FOR DET		001
-160D	D2549010512679		. . TABLE-NURSING NP used on 001M, 001P SEE 25-41-51-20A FOR DET		001
-160E	D2549010510679		. . TABLE-NURSING NP used on 001D SEE 25-41-51-20A FOR DET		001
170A	D2549010500080		. . VENTILATION SYSTEM NP used on 001A, 001C, 001E, 001F, 001G, 001H, 001J, 001K, 001L, 001M, 001N, 001P, 001Q SEE 25-41-51-210 FOR DET		001
-170B	D2549020500080		. . VENTILATION SYSTEM NP used on 001B SEE 25-41-51-210 FOR DET		001
-170C	D2549010500480		. . VENTILATION SYSTEM NP used on 001D SEE 25-41-51-210 FOR DET		001
180A	D2549010500081		. . WATER SYSTEM-POTABLE NP used on 001A, 001C, 001D, 001E, 001F, 001G, 001Q SEE 25-41-51-220 FOR DET		001

- ITEM NOT ILLUSTRATED

FIG. ITEM	PART NUMBER	AIRLINE STOCK NUMBER	NOMENCLATURE 1234567		EFF CODE	UNITS PER ASSY
-180B	D2549020500081		. . WATER SYSTEM-POTABLE used on 001B SEE 25-41-51-22A FOR DET	NP		001
-180C	D2549010501881		. . WATER SYSTEM-POTABLE used on 001M, 001P SEE 25-41-51-220 FOR DET	NP		001
-180D	D2549010501081		. . WATER SYSTEM-POTABLE used on 001H, 001J, 001K, 001L, 001N SEE 25-41-51-220 FOR DET	NP		001
190A	D2549010500082		. . WATER SYSTEM-WASTE used on 001A, 001B, 001C, 001D, 001E, 001F, 001G, 001H, 001J, 001K, 001L, 001N, 001Q SEE 25-41-51-230 FOR DET	NP		001
-190B	D2549030500282		. . WATER SYSTEM-WASTE used on 001M, 001P SEE 25-41-51-230 FOR DET	NP		001
200A	D2549010500083		. . ELECTRICAL SYSTEM used on 001A, 001C, 001F, 001G, 001J SEE 25-41-51-260 FOR DET	NP		001
-200B	D2549010500483		. . ELECTRICAL SYSTEM used on 001D SEE 25-41-51-260 FOR DET	NP		001
-200C	D2549021500083		. . ELECTRICAL SYSTEM used on 001B SEE 25-41-51-26A FOR DET	NP		001
-200D	D2549010501083		. . ELECTRICAL SYSTEM used on 001K, 001L SEE 25-41-51-260 FOR DET	NP		001

- ITEM NOT ILLUSTRATED

FIG. ITEM	PART NUMBER	AIRLINE STOCK NUMBER	NOMENCLATURE 1234567		EFF CODE	UNITS PER ASSY
-200E	D2549030500483		. . ELECTRICAL SYSTEM used on 001M SEE 25-41-51-260 FOR DET	NP		001
-200F	D2549010500683		. . ELECTRICAL SYSTEM used on 001E, 001Q SEE 25-41-51-260 FOR DET	NP		001
-200G	D2549010501883		. . ELECTRICAL SYSTEM used on 001N SEE 25-41-51-26B FOR DET	NP		001
-200H	D2549020501883		. . ELECTRICAL SYSTEM used on 001H SEE 25-41-51-26A FOR DET	NP		001
-200J	D2549030409683		. . ELECTRICAL SYSTEM used on 001P SEE 25-41-51-260 FOR DET	NP		001

- ITEM NOT ILLUSTRATED

THIS PAGE IS INTENTIONALLY LEFT BLANK

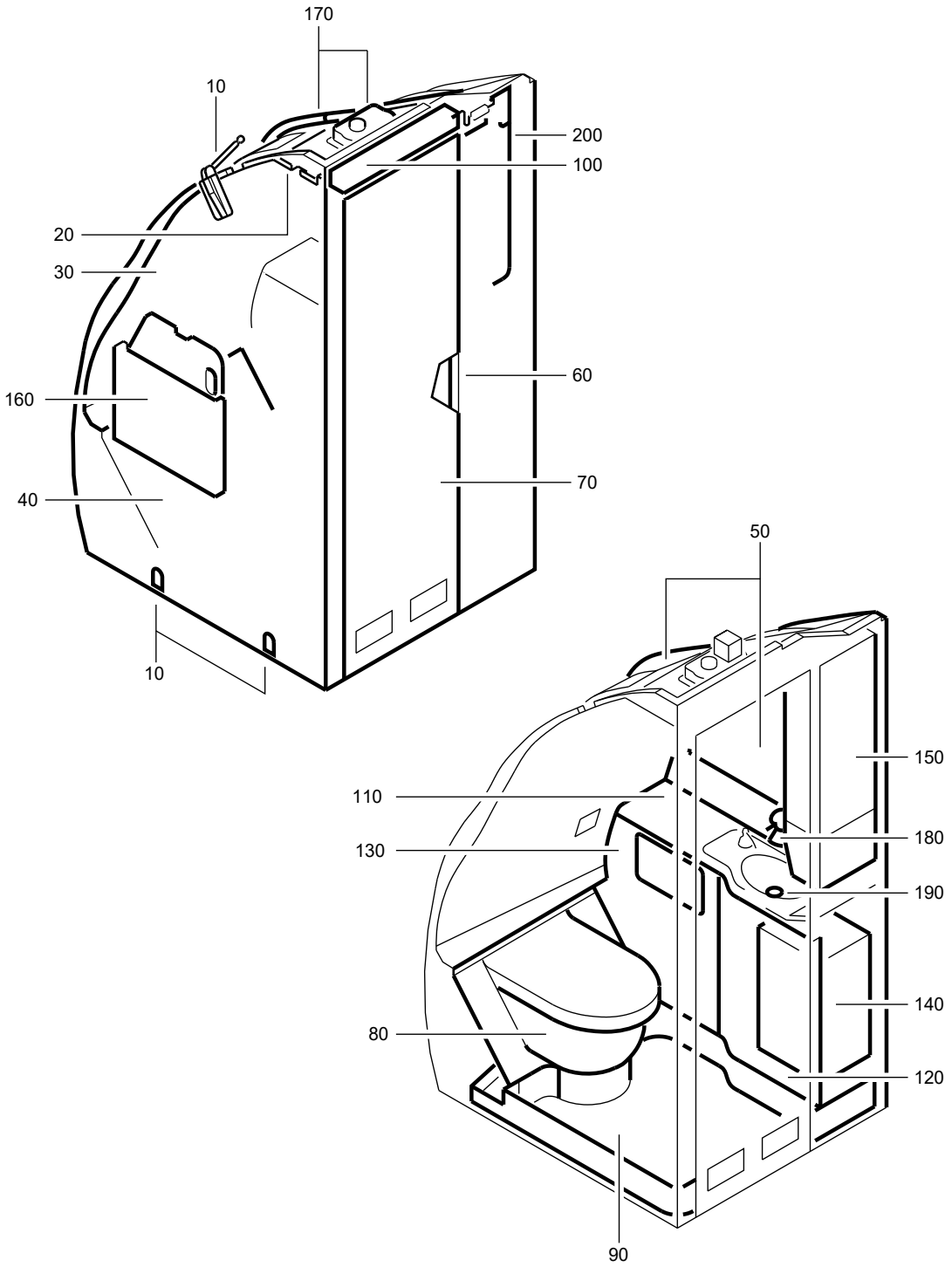

F_PL_254151_01_A_01_00

LAVATORY A ASSY
Figure 01A/EN254151SHEET01A01

FIG. ITEM	PART NUMBER	AIRLINE STOCK NUMBER	NOMENCLATURE 1234567	EFF CODE	UNITS PER ASSY
01A					
-001A	D2549010501000		. LAVATORY A ASSY PRE VSB A2-254-25-078 SEE SIL 25-117 FOR DET		RF
-001B	D2549010501400		. LAVATORY A ASSY SEE SIL 25-117 FOR DET PRE VSB A2-254-25-080		RF
-001C	D2549010501600		. LAVATORY A ASSY SEE SIL 25-117 FOR DET		RF
-001D	D2549010501200		. LAVATORY A ASSY SEE SIL 25-117 FOR DET		RF
-001E	D2549010501800		. LAVATORY A ASSY SEE SIL 25-117 FOR DET		RF
-001F	D2549020501600		. LAVATORY A ASSY SEE SIL 25-117 FOR DET		RF
-001G	D2549010502200		. LAVATORY A ASSY SEE SIL 25-117 FOR DET		RF
-001H	D2549010502400		. LAVATORY A ASSY SEE SIL 25-117 FOR DET		RF
-001J	D2549020500600		. LAVATORY A ASSY SEE SIL 25-117 FOR DET		RF
-001K	D2549020501000		. LAVATORY A ASSY SEE SIL 25-117 FOR DET		RF
-001L	D2549020501400		. LAVATORY A ASSY SEE SIL 25-117 FOR DET		RF
-001M	D2549020502800		. LAVATORY A ASSY SEE SIL 25-117 FOR DET		RF

- ITEM NOT ILLUSTRATED

FIG. ITEM	PART NUMBER	AIRLINE STOCK NUMBER	NOMENCLATURE 1234567	EFF CODE	UNITS PER ASSY
-001N	D2549030502800		. LAVATORY A ASSY POST SB 38-1052 SEE SIL 25-117 FOR DET		RF
-001P	D2549010502400		. LAVATORY A ASSY SEE SIL 25-117 FOR DET		RF
-001Q	D2549010501000		. LAVATORY A ASSY SEE SIL 25-117 FOR DET		RF
-001R	D2549020501000		. LAVATORY A ASSY SEE SIL 25-117 FOR DET		RF
-001S	D2549030502800		. LAVATORY A ASSY SEE SIL 25-117 FOR DET		RF
-001T	R225401146-002		. LAVATORY A ASSY SEE SIL 25-117 FOR DET POST VSB A2-254-25-080		RF
-001U	R225401107-000		. LAVATORY A ASSY POST VSB A2-254-25-078		RF
010A	D2549010500061		. . ATTACHMENT-LAVATORY NP used on 001A, 001B, 001C, 001D, 001E, 001F, 001G, 001N, 001T, 001U SEE 25-41-51-020 FOR DET		001
-010B	D2549020500661		. . ATTACHMENT-LAVATORY NP used on 001J, 001K, 001L, 001M SEE 25-41-51-020 FOR DET		001
-010C	D2549020705861		. . ATTACHMENT-LAVATORY NP POST SB 25-1312 used on 001H, 001P SEE 25-41-51-02D FOR DET		001
-010D	D2549010500061		. . ATTACHMENT-LAVATORY NP used on 001Q, 001S SEE 25-41-51-020 FOR DET		001

- ITEM NOT ILLUSTRATED

FIG. ITEM	PART NUMBER	AIRLINE STOCK NUMBER	NOMENCLATURE 1234567	EFF CODE	UNITS PER ASSY
-010E	D2549020500661		. . ATTACHMENT-LAVATORY NP used on 001R SEE 25-41-51-020 FOR DET		001
020A	D2549010500063		. . PANEL-CEILING NP used on 001A, 001B, 001C, 001D, 001E, 001F, 001G, 001H, 001N, 001P, 001Q, 001S, 001T, 001U SEE 25-41-51-040 FOR DET		001
-020B	D2549020500063		. . PANEL-CEILING NP used on 001J, 001K, 001L, 001M, 001R SEE 25-41-51-040 FOR DET		001
030A	D2549010500064		. . WALL-REAR NP used on 001B, 001D, 001E, 001G, 001T SEE 25-41-51-050 FOR DET		001
-030B	D2549010502464		. . WALL-REAR NP used on 001H, 001P SEE 25-41-51-05A FOR DET		001
-030C	D2549020500064		. . WALL-REAR NP used on 001J, 001K, 001L, 001M SEE 25-41-51-050 FOR DET		001
-030D	R254H155000664		. . WALL-REAR NP used on 001A, 001F, 001U SEE 25-41-51-05B FOR DET		001
-030E	D2549020600064		. . WALL-REAR NP used on 001N SEE 25-41-51-050 FOR DET		001
-030F	D2549010509064		. . WALL-REAR NP used on 001C SEE 25-41-51-050 FOR DET		001

- ITEM NOT ILLUSTRATED

FIG. ITEM	PART NUMBER	AIRLINE STOCK NUMBER	NOMENCLATURE 1234567		EFF CODE	UNITS PER ASSY
-030G	R254H155000664		. . WALL-REAR used on 001Q SEE 25-41-51-05B FOR DET	NP		001
-030H	D2549020500064		. . WALL-REAR used on 001R SEE 25-41-51-050 FOR DET	NP		001
-030J	D2549020600064		. . WALL-REAR used on 001S SEE 25-41-51-050 FOR DET	NP		001
040A	D2549010501065		. . WALL-SIDE used on 001A, 001F, 001U SEE 25-41-51-060 FOR DET	NP		001
-040B	D2549010500665		. . WALL-SIDE PRE VSB A2-254-25-080 used on 001B SEE 25-41-51-060 FOR DET	NP		001
-040C	D2549010500465		. . WALL-SIDE used on 001C SEE 25-41-51-060 FOR DET	NP		001
-040D	D2549010500865		. . WALL-SIDE used on 001D SEE 25-41-51-060 FOR DET	NP		001
-040E	D2549010501865		. . WALL-SIDE used on 001E SEE 25-41-51-060 FOR DET	NP		001
-040F	D2549010502265		. . WALL-SIDE used on 001G SEE 25-41-51-060 FOR DET	NP		001
-040G	D2549010502465		. . WALL-SIDE used on 001H, 001P SEE 25-41-51-060 FOR DET	NP		001

- ITEM NOT ILLUSTRATED

FIG. ITEM	PART NUMBER	AIRLINE STOCK NUMBER	NOMENCLATURE 1234567	EFF CODE	UNITS PER ASSY
-040H	D2549020500065		. . WALL-SIDE NP used on 001J, 001K, 001L, 001M SEE 25-41-51-060 FOR DET		001
-040J	D2549030500865		. . WALL-SIDE NP used on 001N SEE 25-41-51-06B FOR DET		001
-040K	D2549010501065		. . WALL-SIDE NP used on 001Q SEE 25-41-51-060 FOR DET		001
-040L	D2549020500065		. . WALL-SIDE NP used on 001R SEE 25-41-51-060 FOR DET		001
-040M	D2549030500865		. . WALL-SIDE NP used on 001S SEE 25-41-51-06B FOR DET		001
-040N	R22540114600065		. . WALL-SIDE NP POST VSB A2-254-25-080 used on 001T SEE 25-41-51-060 FOR DET		001
050A	D2549010501066		. . HOUSING NP used on 001A, 001Q, 001U SEE 25-41-51-07A FOR DET		001
-050B	D2549010500666		. . HOUSING NP used on 001B, 001T SEE 25-41-51-070 FOR DET		001
-050C	D2549010500466		. . HOUSING NP used on 001C SEE 25-41-51-070 FOR DET		001
-050D	D2549010500066		. . HOUSING NP used on 001D SEE 25-41-51-070 FOR DET		001

- ITEM NOT ILLUSTRATED

FIG. ITEM	PART NUMBER	AIRLINE STOCK NUMBER	NOMENCLATURE 1234567	EFF CODE	UNITS PER ASSY
-050E	D2549010501866		. . HOUSING NP used on 001E SEE 25-41-51-070 FOR DET		001
-050F	D2549020501666		. . HOUSING NP used on 001F SEE 25-41-51-07A FOR DET		001
-050G	D2549020502666		. . HOUSING NP used on 001G SEE 25-41-51-070 FOR DET		001
-050H	D2549010502466		. . HOUSING NP used on 001H, 001P SEE 25-41-51-070 FOR DET		001
-050J	D2549020500066		. . HOUSING NP used on 001J, 001K, 001L, 001M, 001R SEE 25-41-51-070 FOR DET		001
-050K	D2549030500866		. . HOUSING NP used on 001N, 001S SEE 25-41-51-07A FOR DET		001
060A	D2549010500069		. . DOOR INSTL NP used on 001A, 001B, 001C, 001D, 001E, 001F, 001G, 001H, 001J, 001K, 001L, 001M, 001N, 001P, 001Q, 001R, 001S, 001T, 001U SEE 25-41-51-100 FOR DET		001
070A	A225400270-510		. . DOOR ASSY-SINGLE used on 001A, 001E, 001F, 001Q, 001U SEE 25-41-51-110 FOR DET		001
-070B	A225400270-508		. . DOOR ASSY-SINGLE used on 001B, 001T SEE 25-41-51-110 FOR DET		001

- ITEM NOT ILLUSTRATED

FIG. ITEM	PART NUMBER	AIRLINE STOCK NUMBER	NOMENCLATURE 1234567		EFF CODE	UNITS PER ASSY
-070C	A225400270-502		. . DOOR ASSY-SINGLE used on 001C SEE 25-41-51-110 FOR DET			001
-070D	A225400270-500		. . DOOR ASSY-SINGLE used on 001D SEE 25-41-51-110 FOR DET			001
-070E	A225400270-512		. . DOOR ASSY-SINGLE used on 001G, 001H, 001P SEE 25-41-51-110 FOR DET			001
-070F	A225400270-504		. . DOOR ASSY-SINGLE used on 001J, 001K, 001L, 001M, 001R SEE 25-41-51-110 FOR DET			001
-070G	A225400270-900		. . DOOR ASSY-SINGLE used on 001N, 001S SEE 25-41-51-110 FOR DET			001
080A	D2549010500671		. . TOILET UNIT AND TOILET SHROUD used on 001B, 001T SEE 25-41-51-120 FOR DET	NP		001
-080B	D2549010500071		. . TOILET UNIT AND TOILET SHROUD used on 001D SEE 25-41-51-120 FOR DET	NP		001
-080C	D2549010501871		. . TOILET UNIT AND TOILET SHROUD used on 001E SEE 25-41-51-120 FOR DET	NP		001
-080D	D2549010502471		. . TOILET UNIT AND TOILET SHROUD used on 001H, 001P SEE 25-41-51-120 FOR DET	NP		001

- ITEM NOT ILLUSTRATED

FIG. ITEM	PART NUMBER	AIRLINE STOCK NUMBER	NOMENCLATURE 1234567		EFF CODE	UNITS PER ASSY
-080E	D2549020500071		. . TOILET UNIT AND TOILET SHROUD used on 001J, 001K, 001L, 001M, 001R SEE 25-41-51-12A FOR DET	NP		001
-080F	D2549010504471		. . TOILET UNIT AND TOILET SHROUD used on 001G SEE 25-41-51-120 FOR DET	NP		001
-080G	D2549010501071		. . TOILET UNIT AND TOILET SHROUD used on 001A, 001C, 001F, 001Q, 001U SEE 25-41-51-12B FOR DET	NP		001
-080H	D2549010507471		. . TOILET UNIT AND TOILET SHROUD used on 001N, 001S SEE 25-41-51-12A FOR DET	NP		001
090A	D2549010501072		. . PAN-FLOOR used on 001A, 001F, 001H, 001U SEE 25-41-51-130 FOR DET	NP		001
-090B	D2549010500672		. . PAN-FLOOR used on 001B, 001E, 001T SEE 25-41-51-130 FOR DET	NP		001
-090C	D2549010500472		. . PAN-FLOOR used on 001C SEE 25-41-51-130 FOR DET	NP		001
-090D	D2549010500072		. . PAN-FLOOR used on 001D SEE 25-41-51-130 FOR DET	NP		001
-090E	D2549020500272		. . PAN-FLOOR used on 001G, 001N SEE 25-41-51-130 FOR DET	NP		001

- ITEM NOT ILLUSTRATED

FIG. ITEM	PART NUMBER	AIRLINE STOCK NUMBER	NOMENCLATURE 1234567	EFF CODE	UNITS PER ASSY
-090F	D2549020500072		. . PAN-FLOOR NP used on 001J, 001K, 001L, 001M SEE 25-41-51-130 FOR DET		001
-090G	D2549010606272		. . PAN-FLOOR NP POST SB 25-1289 used on 001P SEE 25-41-51-13V FOR DET		001
-090H	D2549020700272		. . PAN-FLOOR NP POST SB 25-1289 used on 001Q, 001S SEE 25-41-51-13V FOR DET		001
-090J	D2549020700872		. . PAN-FLOOR NP POST SB 25-1289 used on 001R SEE 25-41-51-13V FOR DET		001
100A	D2549010500073		. . LIGHT-DOOR NP used on 001A, 001B, 001C, 001D, 001E, 001F, 001G, 001H, 001N, 001P, 001Q, 001S, 001T, 001U SEE 25-41-51-140 FOR DET		001
-100B	D2549020500073		. . LIGHT-DOOR NP used on 001J, 001K, 001L, 001M, 001R SEE 25-41-51-140 FOR DET		001
110A	D2549020500274		. . WASHBASIN UNIT NP used on 001A, 001B, 001C, 001E, 001F, 001G, 001N, 001Q, 001S, 001T, 001U SEE 25-41-51-150 FOR DET		001
-110B	D2549010500074		. . WASHBASIN UNIT NP used on 001D SEE 25-41-51-150 FOR DET		001

- ITEM NOT ILLUSTRATED

FIG. ITEM	PART NUMBER	AIRLINE STOCK NUMBER	NOMENCLATURE 1234567	EFF CODE	UNITS PER ASSY
-110C	D2549010502474		. . WASHBASIN UNIT NP used on 001H, 001P SEE 25-41-51-150 FOR DET		001
-110D	D2549020500074		. . WASHBASIN UNIT NP used on 001J, 001K, 001L, 001M, 001R SEE 25-41-51-15A FOR DET		001
120A	D2549010500475		. . DOOR ASSY-WASHBASIN UNIT NP used on 001A, 001B, 001C, 001F, 001Q, 001T, 001U SEE 25-41-51-160 FOR DET		001
-120B	D2549010500075		. . DOOR ASSY-WASHBASIN UNIT NP used on 001D SEE 25-41-51-160 FOR DET		001
-120C	D2549010501875		. . DOOR ASSY-WASHBASIN UNIT NP used on 001E SEE 25-41-51-160 FOR DET		001
-120D	D2549010502275		. . DOOR ASSY-WASHBASIN UNIT NP used on 001G, 001H, 001N, 001P, 001S SEE 25-41-51-160 FOR DET		001
-120E	D2549020500075		. . DOOR ASSY-WASHBASIN UNIT NP used on 001J, 001K, 001L, 001M, 001R SEE 25-41-51-160 FOR DET		001

- ITEM NOT ILLUSTRATED

FIG. ITEM	PART NUMBER	AIRLINE STOCK NUMBER	NOMENCLATURE 1234567	EFF CODE	UNITS PER ASSY
130A	D2549010500476		. . PANEL ASSY-WASHBASIN UNIT NP used on 001A, 001B, 001C, 001F, 001Q, 001T, 001U SEE 25-41-51-17A FOR DET		001
-130B	D2549010500076		. . PANEL ASSY-WASHBASIN UNIT NP used on 001D SEE 25-41-51-170 FOR DET		001
-130C	D2549010501876		. . PANEL ASSY-WASHBASIN UNIT NP used on 001E SEE 25-41-51-17A FOR DET		001
-130D	D2549010502276		. . PANEL ASSY-WASHBASIN UNIT NP used on 001G, 001H, 001P SEE 25-41-51-17A FOR DET		001
-130E	D2549020500076		. . PANEL ASSY-WASHBASIN UNIT NP used on 001J, 001K, 001L, 001M, 001R SEE 25-41-51-17A FOR DET		001
-130F	D2549030500876		. . PANEL ASSY-WASHBASIN UNIT NP used on 001N, 001S SEE 25-41-51-17B FOR DET		001
140A	D2549010500077		. . BIN-WASTE,CHUTE-WASTE AND EXTINGUISHER-FIRE NP used on 001A, 001B, 001D, 001E, 001F, 001G, 001N, 001Q, 001S, 001T, 001U SEE 25-41-51-180 FOR DET		001

- ITEM NOT ILLUSTRATED

FIG. ITEM	PART NUMBER	AIRLINE STOCK NUMBER	NOMENCLATURE 1234567	EFF CODE	UNITS PER ASSY
-140B	D2549020500077		. . BIN-WASTE,CHUTE-WASTE AND EXTINGUISHER-FIRE NP used on 001J, 001K, 001L, 001M, 001R SEE 25-41-51-180 FOR DET		001
-140C	D2549010501677		. . BIN-WASTE,CHUTE-WASTE AND EXTINGUISHER-FIRE NP used on 001C SEE 25-41-51-180 FOR DET		001
-140D	D2549020600477		. . BIN-WASTE,CHUTE-WASTE AND EXTINGUISHER-FIRE NP used on 001H, 001P SEE 25-41-51-180 FOR DET		001
150A	D2549010501078		. . CABINET-SERVICE NP used on 001A, 001E, 001F, 001Q, 001U SEE 25-41-51-19C FOR DET		001
-150B	D2549010500678		. . CABINET-SERVICE NP PRE VSB A2-254-25-080 used on 001B, 001G SEE 25-41-51-19B FOR DET		001
-150C	D2549010500078		. . CABINET-SERVICE NP used on 001D SEE 25-41-51-190 FOR DET		001
-150D	D2549010502878		. . CABINET-SERVICE NP used on 001C SEE 25-41-51-19B FOR DET		001
-150E	D2549020500078		. . CABINET-SERVICE NP used on 001J, 001K, 001L, 001M, 001R SEE 25-41-51-19D FOR DET		001

- ITEM NOT ILLUSTRATED

FIG. ITEM	PART NUMBER	AIRLINE STOCK NUMBER	NOMENCLATURE 1234567	EFF CODE	UNITS PER ASSY
-150F	D2549010502478		. . CABINET-SERVICE NP used on 001H, 001P SEE 25-41-51-19B FOR DET		001
-150G	D2549020503678		. . CABINET-SERVICE NP used on 001N, 001S SEE 25-41-51-19B FOR DET		001
-150H	R22540114600078		. . CABINET-SERVICE NP POST VSB A2-254-25-080 used on 001T SEE 25-41-51-19B FOR DET		001
160A	D2549010500479		. . TABLE-NURSING NP used on 001B, 001E, 001G, 001N, 001S, 001T SEE 25-41-51-200 FOR DET		001
-160B	D2549010500079		. . TABLE-NURSING NP used on 001D SEE 25-41-51-200 FOR DET		001
-160C	D2549020500079		. . TABLE-NURSING NP used on 001J, 001K, 001L, 001M, 001R SEE 25-41-51-200 FOR DET		001
-160D	D2549010512679		. . TABLE-NURSING NP used on 001A, 001F, 001H, 001P, 001Q, 001U SEE 25-41-51-20A FOR DET		001
-160E	D2549010510679		. . TABLE-NURSING NP used on 001C SEE 25-41-51-20A FOR DET		001
170A	D2549010500080		. . VENTILATION SYSTEM NP used on 001A, 001B, 001D, 001E, 001F, 001G, 001H, 001N, 001P, 001Q, 001S, 001T, 001U SEE 25-41-51-210 FOR DET		001

- ITEM NOT ILLUSTRATED

FIG. ITEM	PART NUMBER	AIRLINE STOCK NUMBER	NOMENCLATURE 1234567	EFF CODE	UNITS PER ASSY
-170B	D2549010500480		. . VENTILATION SYSTEM NP used on 001C SEE 25-41-51-210 FOR DET		001
-170C	D2549020500080		. . VENTILATION SYSTEM NP used on 001J, 001K, 001L, 001M, 001R SEE 25-41-51-210 FOR DET		001
180A	D2549010501081		. . WATER SYSTEM-POTABLE NP used on 001A, 001B, 001C, 001Q, 001T, 001U SEE 25-41-51-220 FOR DET		001
-180B	D2549010500081		. . WATER SYSTEM-POTABLE NP used on 001D SEE 25-41-51-220 FOR DET		001
-180C	D2549020500081		. . WATER SYSTEM-POTABLE NP used on 001J, 001K, 001L, 001M, 001R SEE 25-41-51-22A FOR DET		001
-180D	D2549010501881		. . WATER SYSTEM-POTABLE NP used on 001E, 001F, 001G, 001H, 001P SEE 25-41-51-220 FOR DET		001
-180E	D2549030500881		. . WATER SYSTEM-POTABLE NP used on 001N, 001S SEE 25-41-51-220 FOR DET		001
190A	D2549010500082		. . WATER SYSTEM-WASTE NP used on 001A, 001B, 001C, 001D, 001J, 001K, 001L, 001M, 001Q, 001R, 001T, 001U SEE 25-41-51-230 FOR DET		001
-190B	D2549030500282		. . WATER SYSTEM-WASTE NP used on 001E, 001F, 001G SEE 25-41-51-230 FOR DET		001

- ITEM NOT ILLUSTRATED

FIG. ITEM	PART NUMBER	AIRLINE STOCK NUMBER	NOMENCLATURE 1234567	EFF CODE	UNITS PER ASSY
-190C	D2549030500882		. . WATER SYSTEM-WASTE NP used on 001N, 001S SEE 25-41-51-230 FOR DET		001
-190D	D2549020600482		. . WATER SYSTEM-WASTE NP used on 001H, 001P SEE 25-41-51-23C FOR DET		001
200A	D2549010501083		. . ELECTRICAL SYSTEM NP used on 001A, 001D, 001F, 001Q, 001U SEE 25-41-51-260 FOR DET		001
-200B	D2549010501683		. . ELECTRICAL SYSTEM NP used on 001C SEE 25-41-51-260 FOR DET		001
-200C	D2549021500083		. . ELECTRICAL SYSTEM NP used on 001J, 001K, 001R SEE 25-41-51-26A FOR DET		001
-200D	D2549020501483		. . ELECTRICAL SYSTEM NP used on 001L SEE 25-41-51-26A FOR DET		001
-200E	D2549020502883		. . ELECTRICAL SYSTEM NP used on 001M SEE 25-41-51-260 FOR DET		001
-200F	D2549010502483		. . ELECTRICAL SYSTEM NP used on 001H, 001P SEE 25-41-51-26B FOR DET		001
-200G	D2549010501483		. . ELECTRICAL SYSTEM NP used on 001B, 001T SEE 25-41-51-260 FOR DET		001
-200H	D2549010501883		. . ELECTRICAL SYSTEM NP used on 001E SEE 25-41-51-26B FOR DET		001

- ITEM NOT ILLUSTRATED

FIG. ITEM	PART NUMBER	AIRLINE STOCK NUMBER	NOMENCLATURE 1234567		EFF CODE	UNITS PER ASSY
-200J	D2549010502283		. . ELECTRICAL SYSTEM used on 001G SEE 25-41-51-26B FOR DET	NP		001
-200K	D2549030500483		. . ELECTRICAL SYSTEM used on 001N, 001S SEE 25-41-51-260 FOR DET	NP		001

- ITEM NOT ILLUSTRATED

THIS PAGE IS INTENTIONALLY LEFT BLANK

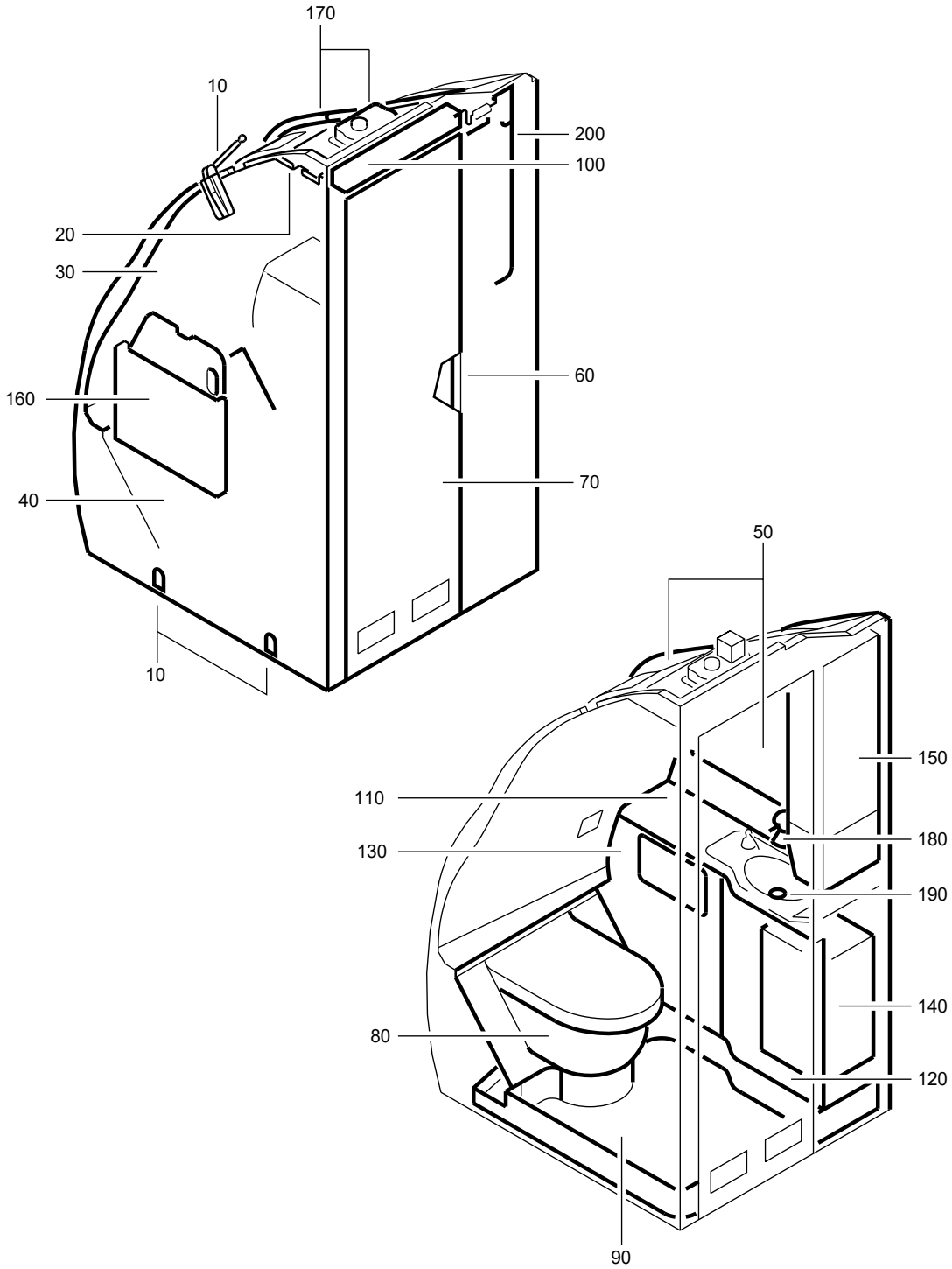

F_PL_254151_01_B_01_00

LAVATORY A ASSY
Figure 01B/EN254151SHEET01B01

FIG. ITEM	PART NUMBER	AIRLINE STOCK NUMBER	NOMENCLATURE 1234567	EFF CODE	UNITS PER ASSY
01B					
-001A	D2549020502400		. LAVATORY A ASSY SEE SIL 25-117 FOR DET		RF
-001B	D2549010502600		. LAVATORY A ASSY SEE SIL 25-117 FOR DET		RF
-001C	D2549010502800		. LAVATORY A ASSY SEE SIL 25-117 FOR DET		RF
-001D	D2549020503000		. LAVATORY A ASSY SEE SIL 25-117 FOR DET		RF
-001E	D2549020502600		. LAVATORY A ASSY SEE SIL 25-117 FOR DET		RF
-001F	D2549030500400		. LAVATORY A ASSY SEE SIL 25-117 FOR DET PRE VSB A2-254-25-080		RF
-001G	D2549020503400		. LAVATORY A ASSY SEE SIL 25-117 FOR DET		RF
-001H	D2549020503200		. LAVATORY A ASSY SEE SIL 25-117 FOR DET		RF
-001J	D2549010503400		. LAVATORY A ASSY SEE SIL 25-117 FOR DET		RF
-001K	D2549010503200		. LAVATORY A ASSY SEE SIL 25-117 FOR DET		RF
-001L	D2549010503800		. LAVATORY A ASSY SEE SIL 25-117 FOR DET		RF
-001M	D2549020501200		. LAVATORY A ASSY POST SB 38-1052 SEE SIL 25-117 FOR DET		RF

- ITEM NOT ILLUSTRATED

FIG. ITEM	PART NUMBER	AIRLINE STOCK NUMBER	NOMENCLATURE 1234567		EFF CODE	UNITS PER ASSY
-001N	D2549010501000		. LAVATORY A ASSY POST SB 25-1312 SEE SIL 25-117 FOR DET			RF
-001P	D2549020503000		. LAVATORY A ASSY SEE SIL 25-117 FOR DET			RF
-001Q	R225401188-000		. LAVATORY A ASSY SEE SIL 25-117 FOR DET POST VSB A2-254-25-080			RF
010A	D2549010500061		. . ATTACHMENT-LAVATORY used on 001A, 001B, 001C, 001D, 001E, 001F, 001G, 001J, 001K, 001L, 001M, 001Q SEE 25-41-51-020 FOR DET	NP		001
-010B	D2549020500661		. . ATTACHMENT-LAVATORY used on 001H SEE 25-41-51-020 FOR DET	NP		001
-010C	D2549020610061		. . ATTACHMENT-LAVATORY used on 001N SEE 25-41-51-02D FOR DET	NP		001
-010D	D2549010500061		. . ATTACHMENT-LAVATORY used on 001P SEE 25-41-51-020 FOR DET	NP		001
020A	D2549010500063		. . PANEL-CEILING used on 001A, 001B, 001C, 001D, 001E, 001F, 001G, 001J, 001K, 001L, 001M, 001N, 001P, 001Q SEE 25-41-51-040 FOR DET	NP		001
-020B	D2549020500063		. . PANEL-CEILING used on 001H SEE 25-41-51-040 FOR DET	NP		001

- ITEM NOT ILLUSTRATED

FIG. ITEM	PART NUMBER	AIRLINE STOCK NUMBER	NOMENCLATURE 1234567	EFF CODE	UNITS PER ASSY
030A	D2549010500064		. . WALL-REAR NP used on 001A, 001B, 001E, 001F, 001K, 001L, 001M, 001Q SEE 25-41-51-050 FOR DET		001
-030B	D2549020500064		. . WALL-REAR NP used on 001H SEE 25-41-51-050 FOR DET		001
-030C	R254H155000664		. . WALL-REAR NP used on 001D, 001G SEE 25-41-51-05B FOR DET		001
-030D	D2549010509064		. . WALL-REAR NP used on 001C, 001J SEE 25-41-51-050 FOR DET		001
-030E	D2549010501064		. . WALL-REAR NP used on 001N SEE 25-41-51-05A FOR DET		001
-030F	R254H155000664		. . WALL-REAR NP used on 001P SEE 25-41-51-05B FOR DET		001
040A	D2549020502465		. . WALL-SIDE NP used on 001A SEE 25-41-51-06B FOR DET		001
-040B	D2549010502665		. . WALL-SIDE NP used on 001B, 001L SEE 25-41-51-06B FOR DET		001
-040C	D2549010500465		. . WALL-SIDE NP used on 001C, 001J SEE 25-41-51-060 FOR DET		001
-040D	D2549020503065		. . WALL-SIDE NP used on 001D SEE 25-41-51-06B FOR DET		001

- ITEM NOT ILLUSTRATED

FIG. ITEM	PART NUMBER	AIRLINE STOCK NUMBER	NOMENCLATURE 1234567	EFF CODE	UNITS PER ASSY
-040E	D2549020502665		. . WALL-SIDE NP used on 001E SEE 25-41-51-06B FOR DET		001
-040F	D2549030501265		. . WALL-SIDE NP PRE VSB A2-254-25-080 used on 001F SEE 25-41-51-06A FOR DET		001
-040G	D2549020500465		. . WALL-SIDE NP used on 001M SEE 25-41-51-060 FOR DET		001
-040H	D2549020500065		. . WALL-SIDE NP used on 001H SEE 25-41-51-060 FOR DET		001
-040J	D2549010502265		. . WALL-SIDE NP used on 001K SEE 25-41-51-060 FOR DET		001
-040K	D2549020503465		. . WALL-SIDE NP used on 001N SEE 25-41-51-48E FOR DET		001
-040L	D2549010501065		. . WALL-SIDE NP used on 001G SEE 25-41-51-060 FOR DET		001
-040M	D2549020503065		. . WALL-SIDE NP used on 001P SEE 25-41-51-06B FOR DET		001
-040N	R22540118800065		. . WALL-SIDE NP POST VSB A2-254-25-080 used on 001Q SEE 25-41-51-06A FOR DET		001
050A	D2549010502266		. . HOUSING NP used on 001A, 001D, 001K, 001P SEE 25-41-51-070 FOR DET		001

- ITEM NOT ILLUSTRATED

FIG. ITEM	PART NUMBER	AIRLINE STOCK NUMBER	NOMENCLATURE 1234567		EFF CODE	UNITS PER ASSY
-050B	D2549010502666		. . HOUSING used on 001B, 001L SEE 25-41-51-070 FOR DET	NP		001
-050C	D2549010502866		. . HOUSING used on 001C, 001J SEE 25-41-51-070 FOR DET	NP		001
-050D	D2549010504466		. . HOUSING used on 001F, 001Q SEE 25-41-51-07Y FOR DET	NP		001
-050E	D2549020501666		. . HOUSING used on 001G SEE 25-41-51-07A FOR DET	NP		001
-050F	D2549020500066		. . HOUSING used on 001H SEE 25-41-51-070 FOR DET	NP		001
-050G	D2549020502666		. . HOUSING used on 001E SEE 25-41-51-070 FOR DET	NP		001
-050H	D2549020500266		. . HOUSING used on 001M SEE 25-41-51-070 FOR DET	NP		001
-050J	D2549010501066		. . HOUSING used on 001N SEE 25-41-51-07Y FOR DET	NP		001
060A	D2549010500069		. . DOOR INSTL used on 001A, 001B, 001C, 001D, 001E, 001F, 001G, 001H, 001J, 001K, 001L, 001M, 001N, 001P, 001Q SEE 25-41-51-100 FOR DET	NP		001

- ITEM NOT ILLUSTRATED

FIG. ITEM	PART NUMBER	AIRLINE STOCK NUMBER	NOMENCLATURE 1234567	EFF CODE	UNITS PER ASSY
070A	A225400270-506		. . DOOR ASSY-SINGLE used on 001A, 001D, 001G, 001P SEE 25-41-51-110 FOR DET		001
-070B	A225400270-500		. . DOOR ASSY-SINGLE used on 001B, 001L SEE 25-41-51-110 FOR DET		001
-070C	A225400270-502		. . DOOR ASSY-SINGLE used on 001C, 001J SEE 25-41-51-110 FOR DET		001
-070D	A225400270-508		. . DOOR ASSY-SINGLE used on 001E, 001F, 001Q SEE 25-41-51-110 FOR DET		001
-070E	A225400270-504		. . DOOR ASSY-SINGLE used on 001H SEE 25-41-51-110 FOR DET		001
-070F	A225400270-512		. . DOOR ASSY-SINGLE used on 001K, 001M SEE 25-41-51-110 FOR DET		001
-070G	A225400270-510		. . DOOR ASSY-SINGLE used on 001N SEE 25-41-51-110 FOR DET		001
080A	D2549020500471		. . TOILET UNIT AND TOILET SHROUD NP used on 001A SEE 25-41-51-120 FOR DET		001
-080B	D2549010500071		. . TOILET UNIT AND TOILET SHROUD NP used on 001B, 001L SEE 25-41-51-120 FOR DET		001

- ITEM NOT ILLUSTRATED

FIG. ITEM	PART NUMBER	AIRLINE STOCK NUMBER	NOMENCLATURE 1234567		EFF CODE	UNITS PER ASSY
-080C	D2549010500671		. . TOILET UNIT AND TOILET SHROUD used on 001F, 001Q SEE 25-41-51-120 FOR DET	NP		001
-080D	D2549010502471		. . TOILET UNIT AND TOILET SHROUD used on 001E SEE 25-41-51-120 FOR DET	NP		001
-080E	D2549020500071		. . TOILET UNIT AND TOILET SHROUD used on 001H SEE 25-41-51-12A FOR DET	NP		001
-080F	D2549010501071		. . TOILET UNIT AND TOILET SHROUD used on 001C, 001D, 001G, 001J, 001N, 001P SEE 25-41-51-12B FOR DET	NP		001
-080G	D2549010503271		. . TOILET UNIT AND TOILET SHROUD used on 001K SEE 25-41-51-12B FOR DET	NP		001
-080H	D2549020500271		. . TOILET UNIT AND TOILET SHROUD used on 001M SEE 25-41-51-12B FOR DET	NP		001
090A	D2549020500272		. . PAN-FLOOR used on 001A, 001D, 001E, 001K, 001M SEE 25-41-51-130 FOR DET	NP		001
-090B	D2549010500072		. . PAN-FLOOR used on 001B, 001L SEE 25-41-51-130 FOR DET	NP		001

- ITEM NOT ILLUSTRATED

FIG. ITEM	PART NUMBER	AIRLINE STOCK NUMBER	NOMENCLATURE 1234567		EFF CODE	UNITS PER ASSY
-090C	D2549010500472		. . PAN-FLOOR used on 001C, 001J SEE 25-41-51-130 FOR DET	NP		001
-090D	D2549030500472		. . PAN-FLOOR used on 001F, 001Q SEE 25-41-51-13A FOR DET	NP		001
-090E	D2549010501072		. . PAN-FLOOR used on 001G SEE 25-41-51-130 FOR DET	NP		001
-090F	D2549020500072		. . PAN-FLOOR used on 001H SEE 25-41-51-130 FOR DET	NP		001
-090G	D2549020503472		. . PAN-FLOOR used on 001N SEE 25-41-51-130 FOR DET	NP		001
-090H	D2549020700272		. . PAN-FLOOR POST SB 25-1289 used on 001P SEE 25-41-51-13V FOR DET	NP		001
100A	D2549010500073		. . LIGHT-DOOR used on 001A, 001B, 001C, 001D, 001E, 001F, 001G, 001J, 001K, 001L, 001M, 001N, 001P, 001Q SEE 25-41-51-140 FOR DET	NP		001
-100B	D2549020500073		. . LIGHT-DOOR used on 001H SEE 25-41-51-140 FOR DET	NP		001
110A	D2549020500274		. . WASHBASIN UNIT used on 001A, 001C, 001D, 001E, 001F, 001G, 001J, 001K, 001M, 001N, 001P, 001Q SEE 25-41-51-150 FOR DET	NP		001

- ITEM NOT ILLUSTRATED

FIG. ITEM	PART NUMBER	AIRLINE STOCK NUMBER	NOMENCLATURE 1234567		EFF CODE	UNITS PER ASSY
-110B	D2549020500074		. . WASHBASIN UNIT used on 001H SEE 25-41-51-15A FOR DET	NP		001
-110C	D2549010500074		. . WASHBASIN UNIT used on 001B, 001L SEE 25-41-51-150 FOR DET	NP		001
120A	D2549020500275		. . DOOR ASSY-WASHBASIN UNIT used on 001A, 001M SEE 25-41-51-160 FOR DET	NP		001
-120B	D2549010500075		. . DOOR ASSY-WASHBASIN UNIT used on 001B, 001L SEE 25-41-51-160 FOR DET	NP		001
-120C	D2549010500475		. . DOOR ASSY-WASHBASIN UNIT used on 001C, 001D, 001F, 001G, 001J, 001N, 001P, 001Q SEE 25-41-51-160 FOR DET	NP		001
-120D	D2549010502275		. . DOOR ASSY-WASHBASIN UNIT used on 001E, 001K SEE 25-41-51-160 FOR DET	NP		001
-120E	D2549020500075		. . DOOR ASSY-WASHBASIN UNIT used on 001H SEE 25-41-51-160 FOR DET	NP		001
130A	D2549020500276		. . PANEL ASSY-WASHBASIN UNIT used on 001A, 001M SEE 25-41-51-17A FOR DET	NP		001

- ITEM NOT ILLUSTRATED

FIG. ITEM	PART NUMBER	AIRLINE STOCK NUMBER	NOMENCLATURE 1234567		EFF CODE	UNITS PER ASSY
-130B	D2549010500076		. . PANEL ASSY-WASHBASIN UNIT used on 001B, 001L SEE 25-41-51-170 FOR DET	NP		001
-130C	D2549010500476		. . PANEL ASSY-WASHBASIN UNIT used on 001C, 001D, 001F, 001G, 001J, 001N, 001P, 001Q SEE 25-41-51-17A FOR DET	NP		001
-130D	D2549010502276		. . PANEL ASSY-WASHBASIN UNIT used on 001E, 001K SEE 25-41-51-17A FOR DET	NP		001
-130E	D2549020500076		. . PANEL ASSY-WASHBASIN UNIT used on 001H SEE 25-41-51-17A FOR DET	NP		001
140A	D2549010500077		. . BIN-WASTE,CHUTE-WASTE AND EXTINGUISHER-FIRE used on 001A, 001B, 001D, 001E, 001F, 001G, 001K, 001L, 001M, 001N, 001P, 001Q SEE 25-41-51-180 FOR DET	NP		001
-140B	D2549010502877		. . BIN-WASTE,CHUTE-WASTE AND EXTINGUISHER-FIRE used on 001C, 001J SEE 25-41-51-180 FOR DET	NP		001
-140C	D2549020500077		. . BIN-WASTE,CHUTE-WASTE AND EXTINGUISHER-FIRE used on 001H SEE 25-41-51-180 FOR DET	NP		001
150A	D2549020500478		. . CABINET-SERVICE used on 001A, 001M SEE 25-41-51-19B FOR DET	NP		001

- ITEM NOT ILLUSTRATED

FIG. ITEM	PART NUMBER	AIRLINE STOCK NUMBER	NOMENCLATURE 1234567		EFF CODE	UNITS PER ASSY
-150B	D2549010500078		. . CABINET-SERVICE used on 001B, 001L SEE 25-41-51-190 FOR DET	NP		001
-150C	D2549010502878		. . CABINET-SERVICE used on 001C, 001J SEE 25-41-51-19B FOR DET	NP		001
-150D	D2549020503078		. . CABINET-SERVICE used on 001D, 001E, 001P SEE 25-41-51-19B FOR DET	NP		001
-150E	D2549010501078		. . CABINET-SERVICE used on 001G, 001N SEE 25-41-51-19C FOR DET	NP		001
-150F	D2549020500078		. . CABINET-SERVICE used on 001H SEE 25-41-51-19D FOR DET	NP		001
-150G	D2549010500678		. . CABINET-SERVICE used on 001K SEE 25-41-51-19B FOR DET	NP		001
-150H	D2549020503678		. . CABINET-SERVICE PRE VSB A2-254-25-080 used on 001F SEE 25-41-51-19B FOR DET	NP		001
-150J	R22540118800078		. . CABINET-SERVICE POST VSB A2-254-25-080 used on 001Q SEE 25-41-51-19B FOR DET	NP		001
160A	D2549010500479		. . TABLE-NURSING used on 001A, 001E, 001F, 001K, 001M, 001Q SEE 25-41-51-200 FOR DET	NP		001

- ITEM NOT ILLUSTRATED

FIG. ITEM	PART NUMBER	AIRLINE STOCK NUMBER	NOMENCLATURE 1234567	EFF CODE	UNITS PER ASSY
-160B	D2549010500079		. . TABLE-NURSING NP used on 001B, 001L SEE 25-41-51-200 FOR DET		001
-160C	D2549020500079		. . TABLE-NURSING NP used on 001H SEE 25-41-51-200 FOR DET		001
-160D	D2549010512679		. . TABLE-NURSING NP used on 001D, 001G, 001N, 001P SEE 25-41-51-20A FOR DET		001
-160E	D2549010510679		. . TABLE-NURSING NP used on 001C, 001J SEE 25-41-51-20A FOR DET		001
170A	D2549020500080		. . VENTILATION SYSTEM NP used on 001H SEE 25-41-51-210 FOR DET		001
-170B	D2549010500480		. . VENTILATION SYSTEM NP used on 001C, 001J SEE 25-41-51-210 FOR DET		001
-170C	D2549010500080		. . VENTILATION SYSTEM NP used on 001A, 001B, 001D, 001E, 001F, 001G, 001K, 001L, 001M, 001N, 001P, 001Q SEE 25-41-51-210 FOR DET		001
180A	D2549010501881		. . WATER SYSTEM-POTABLE NP used on 001A, 001B, 001C, 001D, 001E, 001F, 001G, 001J, 001K, 001L, 001P, 001Q SEE 25-41-51-220 FOR DET		001
-180B	D2549020500081		. . WATER SYSTEM-POTABLE NP used on 001H SEE 25-41-51-22A FOR DET		001

- ITEM NOT ILLUSTRATED

FIG. ITEM	PART NUMBER	AIRLINE STOCK NUMBER	NOMENCLATURE 1234567		EFF CODE	UNITS PER ASSY
-180C	D2549010501081		. . WATER SYSTEM-POTABLE used on 001M, 001N SEE 25-41-51-220 FOR DET	NP		001
190A	D2549010500082		. . WATER SYSTEM-WASTE used on 001B, 001H, 001M, 001N SEE 25-41-51-230 FOR DET	NP		001
-190B	D2549030500282		. . WATER SYSTEM-WASTE used on 001A, 001C, 001D, 001E, 001F, 001G, 001J, 001K, 001L, 001P, 001Q SEE 25-41-51-230 FOR DET	NP		001
200A	D2549010501083		. . ELECTRICAL SYSTEM used on 001A, 001B, 001N SEE 25-41-51-260 FOR DET	NP		001
-200B	D2549010501683		. . ELECTRICAL SYSTEM used on 001C SEE 25-41-51-260 FOR DET	NP		001
-200C	D2549010503483		. . ELECTRICAL SYSTEM used on 001J SEE 25-41-51-260 FOR DET	NP		001
-200D	D2549020503283		. . ELECTRICAL SYSTEM used on 001H SEE 25-41-51-26A FOR DET	NP		001
-200E	D2549030500483		. . ELECTRICAL SYSTEM used on 001D, 001E, 001G, 001K, 001L, 001P SEE 25-41-51-260 FOR DET	NP		001
-200F	D2549010501883		. . ELECTRICAL SYSTEM used on 001M SEE 25-41-51-26B FOR DET	NP		001

- ITEM NOT ILLUSTRATED

FIG. ITEM	PART NUMBER	AIRLINE STOCK NUMBER	NOMENCLATURE 1234567	EFF CODE	UNITS PER ASSY
-200G	D2549020602883		. . ELECTRICAL SYSTEM NP used on 001F, 001Q SEE 25-41-51-26B FOR DET		001

- ITEM NOT ILLUSTRATED

THIS PAGE IS INTENTIONALLY LEFT BLANK

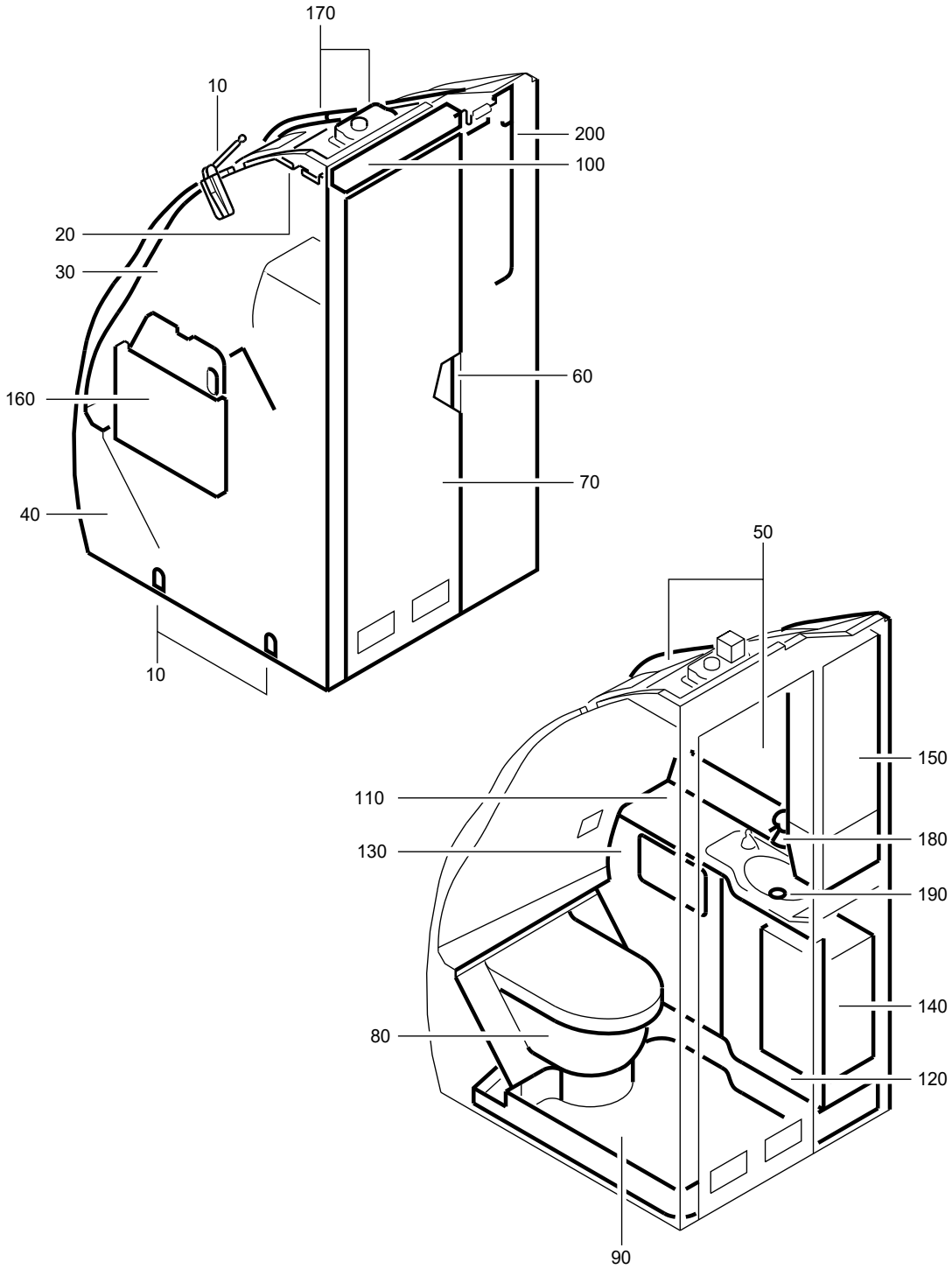

F_PL_254151_01_C_01_00

LAVATORY A ASSY
Figure 01C/EN254151SHEET01C01

FIG. ITEM	PART NUMBER	AIRLINE STOCK NUMBER	NOMENCLATURE 1234567	EFF CODE	UNITS PER ASSY
01C					
-001A	D2549010503600		. LAVATORY A ASSY SEE SIL 25-117 FOR DET		RF
-001B	D2549030500600		. LAVATORY A ASSY SEE SIL 25-117 FOR DET		RF
-001C	D2549010504200		. LAVATORY A ASSY SEE SIL 25-117 FOR DET		RF
-001D	D2549010504400		. LAVATORY A ASSY SEE SIL 25-117 FOR DET		RF
-001E	D2549020503600		. LAVATORY A ASSY SEE SIL 25-117 FOR DET		RF
-001F	D2549010502000		. LAVATORY A ASSY SEE SIL 25-117 FOR DET		RF
-001G	D2549010504600		. LAVATORY A ASSY SEE SIL 25-117 FOR DET		RF
-001H	D2549020600000		. LAVATORY A ASSY SEE SIL 25-117 FOR DET		RF
-001J	D2549030500800		. LAVATORY A ASSY PRE VSB A2-254-25-087 SEE SIL 25-117 FOR DET		RF
-001K	D2549020503800		. LAVATORY A ASSY SEE SIL 25-117 FOR DET		RF
-001L	D2549010504800		. LAVATORY A ASSY VSB A2-254-25-013 SEE SIL 25-117 FOR DET		RF
-001M	D2549010504800		. LAVATORY A ASSY POST SB 25-1239 POST SB 25-1289 SEE SIL 25-117 FOR DET		RF

- ITEM NOT ILLUSTRATED

FIG. ITEM	PART NUMBER	AIRLINE STOCK NUMBER	NOMENCLATURE 1234567		EFF CODE	UNITS PER ASSY
-001N	D2549010502000		. LAVATORY A ASSY POST SB 25-1312 SEE SIL 25-117 FOR DET			RF
-001P	D2549030500800		. LAVATORY A ASSY SEE SIL 25-117 FOR DET			RF
-001Q	R225401188-004		. LAVATORY A ASSY POST VSB A2-254-25-087			RF
010A	D2549010500061		. . ATTACHMENT-LAVATORY used on 001A, 001B, 001C, 001D, 001E, 001F, 001G, 001H, 001J, 001L, 001Q SEE 25-41-51-020 FOR DET	NP		001
-010B	D2549010610061		. . ATTACHMENT-LAVATORY POST SB 25-1312 POST SB 25-1289 used on 001M SEE 25-41-51-02D FOR DET	NP		001
-010C	D2549020610061		. . ATTACHMENT-LAVATORY used on 001K, 001N SEE 25-41-51-02D FOR DET	NP		001
-010D	D2549010500061		. . ATTACHMENT-LAVATORY used on 001P SEE 25-41-51-020 FOR DET	NP		001
020A	D2549010500063		. . PANEL-CEILING used on 001A, 001B, 001C, 001D, 001E, 001F, 001G, 001H, 001J, 001K, 001L, 001M, 001N, 001P, 001Q SEE 25-41-51-040 FOR DET	NP		001
030A	D2549010500064		. . WALL-REAR used on 001A, 001B, 001E, 001G SEE 25-41-51-050 FOR DET	NP		001

- ITEM NOT ILLUSTRATED

FIG. ITEM	PART NUMBER	AIRLINE STOCK NUMBER	NOMENCLATURE 1234567		EFF CODE	UNITS PER ASSY
-030B	D2549020600064		. . WALL-REAR used on 001H, 001J, 001Q SEE 25-41-51-050 FOR DET	NP		001
-030C	R254H155000664		. . WALL-REAR used on 001F SEE 25-41-51-05B FOR DET	NP		001
-030D	D2549010501064		. . WALL-REAR used on 001K, 001N SEE 25-41-51-05A FOR DET	NP		001
-030E	D2549020611664		. . WALL-REAR POST SB 25-1289 used on 001C, 001D, 001L, 001M SEE 25-41-51-05A FOR DET	NP		001
-030F	D2549020600064		. . WALL-REAR used on 001P SEE 25-41-51-050 FOR DET	NP		001
040A	D2549010501865		. . WALL-SIDE used on 001A SEE 25-41-51-060 FOR DET	NP		001
-040B	D2549030500665		. . WALL-SIDE used on 001B SEE 25-41-51-06B FOR DET	NP		001
-040C	D2549010504265		. . WALL-SIDE used on 001C SEE 25-41-51-48E FOR DET	NP		001
-040D	D2549010504465		. . WALL-SIDE used on 001D SEE 25-41-51-48E FOR DET	NP		001
-040E	D2549020503665		. . WALL-SIDE used on 001E SEE 25-41-51-06B FOR DET	NP		001

- ITEM NOT ILLUSTRATED

FIG. ITEM	PART NUMBER	AIRLINE STOCK NUMBER	NOMENCLATURE 1234567		EFF CODE	UNITS PER ASSY
-040F	D2549010504865		. . WALL-SIDE used on 001K, 001N SEE 25-41-51-06A FOR DET	NP		001
-040G	D2549010504665		. . WALL-SIDE used on 001G SEE 25-41-51-060 FOR DET	NP		001
-040H	D2549020600065		. . WALL-SIDE used on 001H SEE 25-41-51-06B FOR DET	NP		001
-040J	D2549030500865		. . WALL-SIDE used on 001J, 001Q SEE 25-41-51-06B FOR DET	NP		001
-040K	D2549020503865		. . WALL-SIDE used on 001F SEE 25-41-51-06A FOR DET	NP		001
-040L	D2549010502165		. . WALL-SIDE POST SB 25-1239 POST SB 25-1312 POST SB 25-1314 used on 001L SEE 25-41-51-48E FOR DET	NP		001
-040M	D2549010504965		. . WALL-SIDE POST SB 25-1289 used on 001M SEE 25-41-51-48E FOR DET	NP		001
-040N	D2549030500865		. . WALL-SIDE used on 001P SEE 25-41-51-06B FOR DET	NP		001
050A	D2549010501866		. . HOUSING used on 001A SEE 25-41-51-070 FOR DET	NP		001

- ITEM NOT ILLUSTRATED

FIG. ITEM	PART NUMBER	AIRLINE STOCK NUMBER	NOMENCLATURE 1234567		EFF CODE	UNITS PER ASSY
-050B	D2549030500666		. . HOUSING used on 001B SEE 25-41-51-07A FOR DET	NP		001
-050C	D2549010504266		. . HOUSING used on 001C SEE 25-41-51-07A FOR DET	NP		001
-050D	D2549010504466		. . HOUSING used on 001D, 001L SEE 25-41-51-07Y FOR DET	NP		001
-050E	D2549020503666		. . HOUSING used on 001E SEE 25-41-51-07Y FOR DET	NP		001
-050F	D2549010502066		. . HOUSING used on 001F SEE 25-41-51-07A FOR DET	NP		001
-050G	D2549010502266		. . HOUSING used on 001G SEE 25-41-51-070 FOR DET	NP		001
-050H	D2549020600066		. . HOUSING used on 001H SEE 25-41-51-07A FOR DET	NP		001
-050J	D2549030500866		. . HOUSING used on 001J, 001P, 001Q SEE 25-41-51-07A FOR DET	NP		001
-050K	D2549010501066		. . HOUSING used on 001K, 001N SEE 25-41-51-07Y FOR DET	NP		001
-050L	D2549010504866		. . HOUSING used on 001M SEE 25-41-51-07Y FOR DET	NP		001

- ITEM NOT ILLUSTRATED

FIG. ITEM	PART NUMBER	AIRLINE STOCK NUMBER	NOMENCLATURE 1234567	EFF CODE	UNITS PER ASSY
060A	D2549010500069		. . DOOR INSTL NP used on 001A, 001B, 001D, 001E, 001G, 001J, 001K, 001N, 001P, 001Q SEE 25-41-51-100 FOR DET		001
-060B	D2549020401269		. . DOOR INSTL NP used on 001C, 001F, 001H, 001L, 001M SEE 25-41-51-10A FOR DET		001
070A	A225400270-510		. . DOOR ASSY-SINGLE used on 001A SEE 25-41-51-110 FOR DET		001
-070B	A225400270-500		. . DOOR ASSY-SINGLE used on 001B SEE 25-41-51-110 FOR DET		001
-070C	A2254002708516		. . DOOR ASSY-SINGLE used on 001C SEE 25-41-51-11Q FOR DET		001
-070D	A225400270-508		. . DOOR ASSY-SINGLE used on 001D, 001E, 001G SEE 25-41-51-110 FOR DET		001
-070E	A225400270-512		. . DOOR ASSY-SINGLE used on 001K, 001N SEE 25-41-51-110 FOR DET		001
-070F	A2254002708520		. . DOOR ASSY-SINGLE used on 001H SEE 25-41-51-110 FOR DET		001
-070G	A225400270-900		. . DOOR ASSY-SINGLE used on 001J, 001P, 001Q SEE 25-41-51-110 FOR DET		001

- ITEM NOT ILLUSTRATED

FIG. ITEM	PART NUMBER	AIRLINE STOCK NUMBER	NOMENCLATURE 1234567		EFF CODE	UNITS PER ASSY
-070H	A2254002708508		. . DOOR ASSY-SINGLE used on 001D, 001E, 001G, 001L, 001M SEE 25-41-51-11Q FOR DET			001
-070J	A2254002708512		. . DOOR ASSY-SINGLE used on 001F, 001K, 001N SEE 25-41-51-110 FOR DET			001
080A	D2549010501871		. . TOILET UNIT AND TOILET SHROUD used on 001A SEE 25-41-51-120 FOR DET	NP		001
-080B	D2549030500671		. . TOILET UNIT AND TOILET SHROUD used on 001B SEE 25-41-51-120 FOR DET	NP		001
-080C	D2549010504271		. . TOILET UNIT AND TOILET SHROUD used on 001C SEE 25-41-51-120 FOR DET	NP		001
-080D	D2549010504471		. . TOILET UNIT AND TOILET SHROUD used on 001D SEE 25-41-51-120 FOR DET	NP		001
-080E	D2549010507071		. . TOILET UNIT AND TOILET SHROUD used on 001F, 001K, 001N SEE 25-41-51-12A FOR DET	NP		001
-080F	D2549020600071		. . TOILET UNIT AND TOILET SHROUD used on 001H SEE 25-41-51-120 FOR DET	NP		001

- ITEM NOT ILLUSTRATED

FIG. ITEM	PART NUMBER	AIRLINE STOCK NUMBER	NOMENCLATURE 1234567	EFF CODE	UNITS PER ASSY
-080G	D2549030500871		. . TOILET UNIT AND TOILET SHROUD NP used on 001G SEE 25-41-51-120 FOR DET		001
-080H	D2549010507471		. . TOILET UNIT AND TOILET SHROUD NP used on 001J, 001L, 001M, 001P, 001Q SEE 25-41-51-12A FOR DET		001
-080J	D2549020503671		. . TOILET UNIT AND TOILET SHROUD NP POST SB 38-1052 used on 001E SEE 25-41-51-12B FOR DET		001
090A	D2549010500672		. . PAN-FLOOR NP used on 001A SEE 25-41-51-130 FOR DET		001
-090B	D2549010500072		. . PAN-FLOOR NP used on 001B SEE 25-41-51-130 FOR DET		001
-090C	D2549010504472		. . PAN-FLOOR NP POST SB 25-1289 used on 001D, 001M SEE 25-41-51-13B FOR DET		001
-090D	D2549020500272		. . PAN-FLOOR NP used on 001E, 001G, 001J, 001Q SEE 25-41-51-130 FOR DET		001
-090E	D2549020603272		. . PAN-FLOOR NP POST SB 25-1314 used on 001C, 001F, 001H, 001L SEE 25-41-51-13U FOR DET		001

- ITEM NOT ILLUSTRATED

FIG. ITEM	PART NUMBER	AIRLINE STOCK NUMBER	NOMENCLATURE 1234567		EFF CODE	UNITS PER ASSY
-090F	D2549010502072		. . PAN-FLOOR used on 001K, 001N SEE 25-41-51-130 FOR DET	NP		001
-090G	D2549020700272		. . PAN-FLOOR POST SB 25-1289 used on 001P SEE 25-41-51-13V FOR DET	NP		001
100A	D2549010500073		. . LIGHT-DOOR used on 001A, 001B, 001C, 001D, 001E, 001F, 001G, 001H, 001J, 001K, 001L, 001M, 001N, 001P, 001Q SEE 25-41-51-140 FOR DET	NP		001
110A	D2549020500274		. . WASHBASIN UNIT PRE VSB A2-254-25-013 used on 001A, 001C, 001D, 001E, 001F, 001G, 001H, 001J, 001K, 001L, 001M, 001N, 001P, 001Q SEE 25-41-51-150 FOR DET	NP		001
-110B	D2549010500074		. . WASHBASIN UNIT used on 001B SEE 25-41-51-150 FOR DET	NP		001
-110C	D2549020500274		. . WASHBASIN UNIT POST VSB A2-254-25-013 used on 001L SEE 25-41-51-150 FOR DET	NP		001
120A	D2549010501875		. . DOOR ASSY-WASHBASIN UNIT used on 001A, 001H SEE 25-41-51-160 FOR DET	NP		001

- ITEM NOT ILLUSTRATED

FIG. ITEM	PART NUMBER	AIRLINE STOCK NUMBER	NOMENCLATURE 1234567	EFF CODE	UNITS PER ASSY
-120B	D2549010500075		. . DOOR ASSY-WASHBASIN UNIT NP used on 001B SEE 25-41-51-160 FOR DET		001
-120C	D2549010504275		. . DOOR ASSY-WASHBASIN UNIT NP used on 001C SEE 25-41-51-160 FOR DET		001
-120D	D2549010502275		. . DOOR ASSY-WASHBASIN UNIT NP used on 001D, 001E, 001G, 001J, 001L, 001M, 001P, 001Q SEE 25-41-51-160 FOR DET		001
-120E	D2549010500475		. . DOOR ASSY-WASHBASIN UNIT NP used on 001F, 001K, 001N SEE 25-41-51-160 FOR DET		001
130A	D2549010501876		. . PANEL ASSY-WASHBASIN UNIT NP used on 001A, 001H SEE 25-41-51-17A FOR DET		001
-130B	D2549030500676		. . PANEL ASSY-WASHBASIN UNIT NP used on 001B SEE 25-41-51-17B FOR DET		001
-130C	D2549010504276		. . PANEL ASSY-WASHBASIN UNIT NP used on 001C SEE 25-41-51-17A FOR DET		001

- ITEM NOT ILLUSTRATED

FIG. ITEM	PART NUMBER	AIRLINE STOCK NUMBER	NOMENCLATURE 1234567		EFF CODE	UNITS PER ASSY
-130D	D2549010502276		. . PANEL ASSY-WASHBASIN UNIT PRE VSB A2-254-25-013 used on 001D, 001E, 001G, 001L, 001M SEE 25-41-51-17A FOR DET	NP		001
-130E	D2549030500876		. . PANEL ASSY-WASHBASIN UNIT used on 001P SEE 25-41-51-17B FOR DET	NP		001
-130F	D2549010500476		. . PANEL ASSY-WASHBASIN UNIT used on 001F, 001J, 001K, 001N, 001Q SEE 25-41-51-17A FOR DET	NP		001
-130G	D2549010502276		. . PANEL ASSY-WASHBASIN UNIT POST VSB A2-254-25-013 used on 001L SEE 25-41-51-17A FOR DET	NP		001
140A	D2549010500077		. . BIN-WASTE,CHUTE-WASTE AND EXTINGUISHER-FIRE used on 001A, 001B, 001C, 001D, 001E, 001F, 001G, 001H, 001J, 001K, 001L, 001M, 001N, 001P, 001Q SEE 25-41-51-180 FOR DET	NP		001
150A	D2549010501078		. . CABINET-SERVICE used on 001A, 001F, 001K, 001N SEE 25-41-51-19C FOR DET	NP		001
-150B	D2549030500678		. . CABINET-SERVICE used on 001B SEE 25-41-51-190 FOR DET	NP		001

- ITEM NOT ILLUSTRATED

FIG. ITEM	PART NUMBER	AIRLINE STOCK NUMBER	NOMENCLATURE 1234567		EFF CODE	UNITS PER ASSY
-150C	D2549010500678		. . CABINET-SERVICE used on 001G SEE 25-41-51-19B FOR DET	NP		001
-150D	D2549020503678		. . CABINET-SERVICE used on 001D, 001E, 001J, 001P, 001Q SEE 25-41-51-19B FOR DET	NP		001
-150E	D2549020600078		. . CABINET-SERVICE used on 001H SEE 25-41-51-19B FOR DET	NP		001
-150F	D2549010504278		. . CABINET-SERVICE PRE VSB A2-254-25-013 used on 001C, 001L, 001M SEE 25-41-51-19B FOR DET	NP		001
-150G	D2549010504278		. . CABINET-SERVICE POST VSB A2-254-25-013 used on 001L SEE 25-41-51-19B FOR DET	NP		001
160A	D2549010500479		. . TABLE-NURSING used on 001A, 001C, 001D, 001E, 001G, 001H, 001J, 001L, 001M, 001P, 001Q SEE 25-41-51-200 FOR DET	NP		001
-160B	D2549010500079		. . TABLE-NURSING used on 001B SEE 25-41-51-200 FOR DET	NP		001
-160C	D2549010512679		. . TABLE-NURSING used on 001F, 001K, 001N SEE 25-41-51-20A FOR DET	NP		001

- ITEM NOT ILLUSTRATED

FIG. ITEM	PART NUMBER	AIRLINE STOCK NUMBER	NOMENCLATURE 1234567		EFF CODE	UNITS PER ASSY
170A	D2549010500080		. . VENTILATION SYSTEM used on 001A, 001B, 001C, 001D, 001E, 001F, 001G, 001H, 001J, 001K, 001L, 001M, 001N, 001P, 001Q SEE 25-41-51-210 FOR DET	NP		001
180A	D2549010501881		. . WATER SYSTEM-POTABLE PRE VSB A2-254-25-013 used on 001A, 001B, 001C, 001D, 001E, 001F, 001G, 001H, 001K, 001L, 001M, 001N, 001P SEE 25-41-51-220 FOR DET	NP		001
-180B	D2549030500881		. . WATER SYSTEM-POTABLE used on 001J, 001Q SEE 25-41-51-220 FOR DET	NP		001
-180C	D2549010501881		. . WATER SYSTEM-POTABLE POST VSB A2-254-25-013 used on 001L SEE 25-41-51-220 FOR DET	NP		001
190A	D2549030500282		. . WATER SYSTEM-WASTE PRE VSB A2-254-25-013 used on 001A, 001B, 001C, 001D, 001E, 001F, 001G, 001K, 001L, 001M, 001N, 001P SEE 25-41-51-230 FOR DET	NP		001
-190B	D2549020600082		. . WATER SYSTEM-WASTE used on 001H SEE 25-41-51-230 FOR DET	NP		001
-190C	D2549030500882		. . WATER SYSTEM-WASTE used on 001J, 001Q SEE 25-41-51-230 FOR DET	NP		001

- ITEM NOT ILLUSTRATED

FIG. ITEM	PART NUMBER	AIRLINE STOCK NUMBER	NOMENCLATURE 1234567		EFF CODE	UNITS PER ASSY
-190D	D2549030500282		. . WATER SYSTEM-WASTE POST VSB A2-254-25-013 used on 001L SEE 25-41-51-230 FOR DET	NP		001
200A	D2549030500483		. . ELECTRICAL SYSTEM used on 001A, 001B, 001C, 001D, 001E, 001F, 001G, 001J, 001K, 001L, 001M, 001N, 001P, 001Q SEE 25-41-51-260 FOR DET	NP		001
-200B	D2549020600283		. . ELECTRICAL SYSTEM used on 001H SEE 25-41-51-260 FOR DET	NP		001

- ITEM NOT ILLUSTRATED

THIS PAGE IS INTENTIONALLY LEFT BLANK

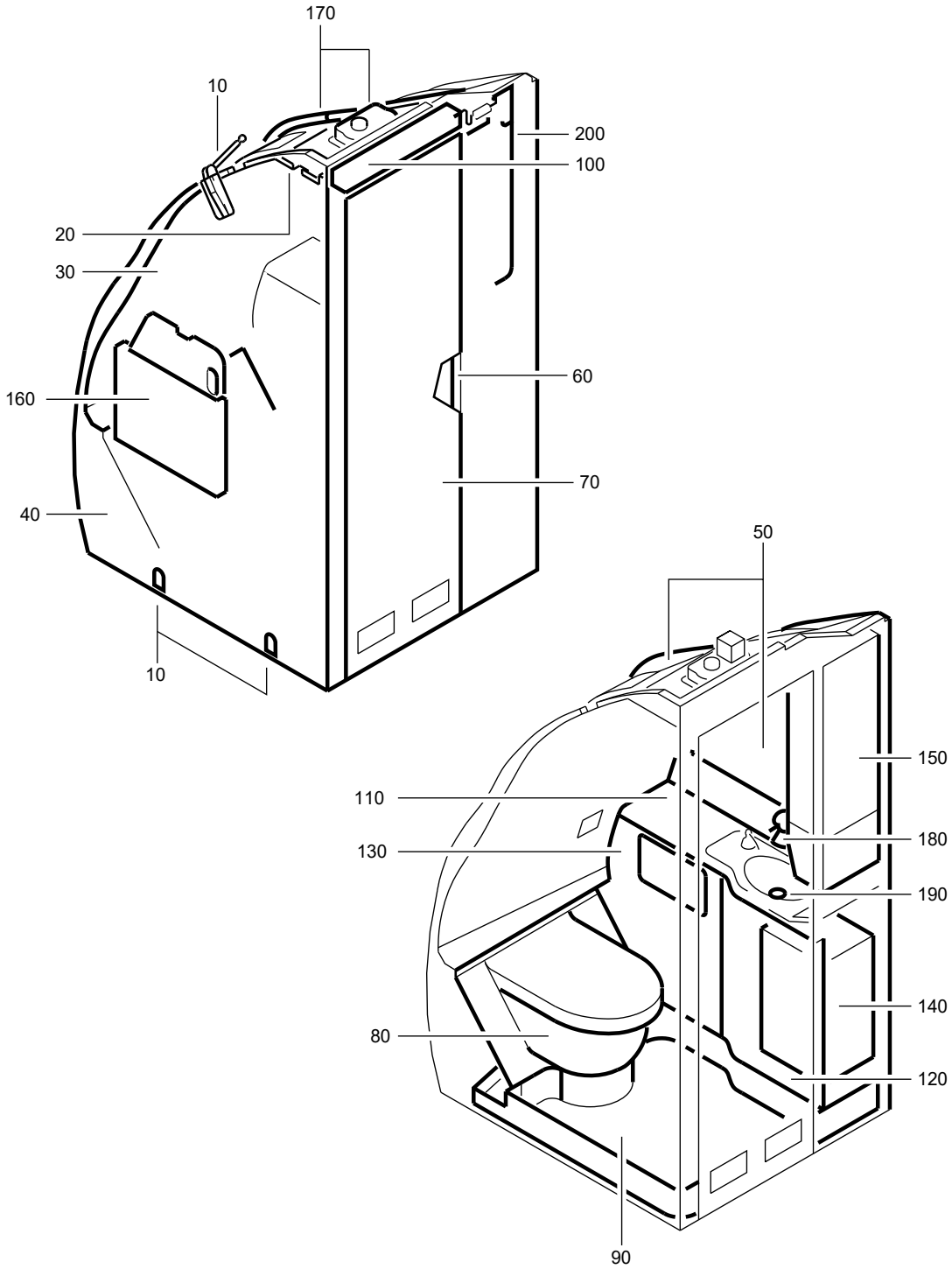

F_PL_254151_01_D_01_00

LAVATORY A ASSY
Figure 01D/EN254151SHEET01D01

FIG. ITEM	PART NUMBER	AIRLINE STOCK NUMBER	NOMENCLATURE 1234567	EFF CODE	UNITS PER ASSY
01D					
-001A	D2549020504000		. LAVATORY A ASSY SEE SIL 25-117 FOR DET		RF
-001B	D2549020600200		. LAVATORY A ASSY SEE SIL 25-117 FOR DET		RF
-001C	D2549030501000		. LAVATORY A ASSY SEE SIL 25-117 FOR DET		RF
-001D	D2549020504200		. LAVATORY A ASSY SEE SIL 25-117 FOR DET		RF
-001E	D2549010505200		. LAVATORY A ASSY SEE SIL 25-117 FOR DET		RF
-001F	D2549010505800		. LAVATORY A ASSY SEE SIL 25-117 FOR DET		RF
-001G	D2549010505400		. LAVATORY A ASSY SEE SIL 25-117 FOR DET		RF
-001H	D2549010505000		. LAVATORY A ASSY SEE SIL 25-117 FOR DET		RF
-001J	D2549010505600		. LAVATORY A ASSY SEE SIL 25-117 FOR DET		RF
-001K	D2549030501800		. LAVATORY A ASSY SEE SIL 25-117 FOR DET		RF
-001L	D2549030501200		. LAVATORY A ASSY PRE VSB A2-254-25-080 SEE SIL 25-117 FOR DET		RF
-001M	D2549020505000		. LAVATORY A ASSY SEE SIL 25-117 FOR DET		RF
-001N	D2549020505000		. LAVATORY A ASSY POST SB 38-1052 SEE SIL 25-117 FOR DET		RF

- ITEM NOT ILLUSTRATED

FIG. ITEM	PART NUMBER	AIRLINE STOCK NUMBER	NOMENCLATURE 1234567		EFF CODE	UNITS PER ASSY
-001P	D2549020504000		. LAVATORY A ASSY SEE SIL 25-117 FOR DET			RF
-001Q	R225401188-002		. LAVATORY A ASSY POST VSB A2-254-25-080 SEE SIL 25-117 FOR DET			RF
010A	D2549010500061		. . ATTACHMENT-LAVATORY used on 001A, 001B, 001C, 001D, 001E, 001F, 001G, 001H, 001J, 001L, 001M, 001N, 001P, 001Q SEE 25-41-51-020 FOR DET	NP		001
-010B	D2549020500661		. . ATTACHMENT-LAVATORY used on 001K SEE 25-41-51-020 FOR DET	NP		001
020A	D2549010500063		. . PANEL-CEILING used on 001A, 001B, 001C, 001D, 001E, 001F, 001G, 001H, 001J, 001L, 001M, 001N, 001P, 001Q SEE 25-41-51-040 FOR DET	NP		001
-020B	D2549020500063		. . PANEL-CEILING used on 001K SEE 25-41-51-040 FOR DET	NP		001
030A	D2549020504064		. . WALL-REAR used on 001A, 001P SEE 25-41-51-05A FOR DET	NP		001
-030B	D2549010500064		. . WALL-REAR used on 001B, 001C, 001D, 001E, 001F, 001G, 001H, 001J, 001L, 001M, 001N, 001Q SEE 25-41-51-050 FOR DET	NP		001

- ITEM NOT ILLUSTRATED

FIG. ITEM	PART NUMBER	AIRLINE STOCK NUMBER	NOMENCLATURE 1234567		EFF CODE	UNITS PER ASSY
-030C	D2549030501864		. . WALL-REAR used on 001K SEE 25-41-51-05A FOR DET	NP		001
040A	D2549020504065		. . WALL-SIDE used on 001A SEE 25-41-51-06C FOR DET	NP		001
-040B	D2549020600265		. . WALL-SIDE used on 001B SEE 25-41-51-06A FOR DET	NP		001
-040C	D2549030501065		. . WALL-SIDE used on 001C SEE 25-41-51-06C FOR DET	NP		001
-040D	D2549020504265		. . WALL-SIDE used on 001D SEE 25-41-51-06C FOR DET	NP		001
-040E	D2549010505265		. . WALL-SIDE used on 001E SEE 25-41-51-06C FOR DET	NP		001
-040F	D2549010505465		. . WALL-SIDE used on 001G SEE 25-41-51-06A FOR DET	NP		001
-040G	D2549010505065		. . WALL-SIDE used on 001H SEE 25-41-51-06E FOR DET	NP		001
-040H	D2549010505665		. . WALL-SIDE used on 001J SEE 25-41-51-06C FOR DET	NP		001
-040J	D2549030501865		. . WALL-SIDE used on 001K SEE 25-41-51-06C FOR DET	NP		001

- ITEM NOT ILLUSTRATED

FIG. ITEM	PART NUMBER	AIRLINE STOCK NUMBER	NOMENCLATURE 1234567	EFF CODE	UNITS PER ASSY
-040K	D2549030501265		. . WALL-SIDE NP PRE VSB A2-254-25-080 used on 001L SEE 25-41-51-06A FOR DET		001
-040L	D2549020505065		. . WALL-SIDE NP used on 001M, 001N SEE 25-41-51-06A FOR DET		001
-040M	D2549010505865		. . WALL-SIDE NP used on 001F SEE 25-41-51-06A FOR DET		001
-040P	D2549020504165		. . WALL-SIDE NP used on 001P SEE 25-41-51-06C FOR DET		001
-040Q	R22540118800065		. . WALL-SIDE NP POST VSB A2-254-25-080 used on 001Q SEE 25-41-51-06A FOR DET		001
050A	D2549020504066		. . HOUSING NP used on 001A SEE 25-41-51-07A FOR DET		001
-050B	D2549020600266		. . HOUSING NP used on 001B, 001F, 001H SEE 25-41-51-07A FOR DET		001
-050C	D2549010504466		. . HOUSING NP used on 001C, 001G, 001L, 001Q SEE 25-41-51-07Y FOR DET		001
-050D	D2549010502266		. . HOUSING NP used on 001D, 001M, 001N SEE 25-41-51-070 FOR DET		001
-050E	D2549020502666		. . HOUSING NP used on 001E SEE 25-41-51-070 FOR DET		001

- ITEM NOT ILLUSTRATED

FIG. ITEM	PART NUMBER	AIRLINE STOCK NUMBER	NOMENCLATURE 1234567		EFF CODE	UNITS PER ASSY
-050F	D2549010505666		. . HOUSING used on 001J SEE 25-41-51-07A FOR DET	NP		001
-050G	D2549030501866		. . HOUSING used on 001K SEE 25-41-51-07B FOR DET	NP		001
-050H	D2549020504166		. . HOUSING used on 001P SEE 25-41-51-07A FOR DET	NP		001
060A	D2549010500069		. . DOOR INSTL used on 001A, 001B, 001C, 001D, 001E, 001F, 001G, 001H, 001J, 001K, 001L, 001M, 001N, 001Q SEE 25-41-51-100 FOR DET	NP		001
-060B	D2549020401269		. . DOOR INSTL used on 001P SEE 25-41-51-10A FOR DET	NP		001
070A	A225400270-522		. . DOOR ASSY-SINGLE used on 001A SEE 25-41-51-11A FOR DET			001
-070B	A225400270-502		. . DOOR ASSY-SINGLE used on 001B, 001F, 001H, 001J SEE 25-41-51-110 FOR DET			001
-070C	A225400270-508		. . DOOR ASSY-SINGLE used on 001C, 001D, 001E, 001L, 001M, 001N, 001Q SEE 25-41-51-110 FOR DET			001
-070D	A225400270-904		. . DOOR ASSY-SINGLE used on 001G SEE 25-41-51-11A FOR DET			001

- ITEM NOT ILLUSTRATED

FIG. ITEM	PART NUMBER	AIRLINE STOCK NUMBER	NOMENCLATURE 1234567	EFF CODE	UNITS PER ASSY
-070E	A225400270-504		. . DOOR ASSY-SINGLE used on 001K SEE 25-41-51-110 FOR DET		001
-070F	A2254002708522		. . DOOR ASSY-SINGLE used on 001A, 001P SEE 25-41-51-11A FOR DET		001
080A	D2549020600071		. . TOILET UNIT AND TOILET SHROUD NP used on 001A, 001P SEE 25-41-51-120 FOR DET		001
-080B	D2549030501271		. . TOILET UNIT AND TOILET SHROUD NP used on 001L, 001Q SEE 25-41-51-120 FOR DET		001
-080C	D2549030500871		. . TOILET UNIT AND TOILET SHROUD NP used on 001B, 001E, 001F, 001M SEE 25-41-51-120 FOR DET		001
-080D	D2549030501071		. . TOILET UNIT AND TOILET SHROUD NP used on 001C SEE 25-41-51-120 FOR DET		001
-080E	D2549030502471		. . TOILET UNIT AND TOILET SHROUD NP used on 001K SEE 25-41-51-12A FOR DET		001
-080F	D2549010507471		. . TOILET UNIT AND TOILET SHROUD NP used on 001D, 001G, 001H, 001J, 001N SEE 25-41-51-12A FOR DET		001

- ITEM NOT ILLUSTRATED

FIG. ITEM	PART NUMBER	AIRLINE STOCK NUMBER	NOMENCLATURE 1234567		EFF CODE	UNITS PER ASSY
090A	D2549020504072		. . PAN-FLOOR used on 001A SEE 25-41-51-13A FOR DET	NP		001
-090B	D2549020500272		. . PAN-FLOOR used on 001B, 001D, 001E, 001G, 001H, 001J, 001M, 001N SEE 25-41-51-130 FOR DET	NP		001
-090C	D2549010505872		. . PAN-FLOOR used on 001F SEE 25-41-51-130 FOR DET	NP		001
-090D	D2549010500672		. . PAN-FLOOR used on 001C SEE 25-41-51-130 FOR DET	NP		001
-090E	D2549020500072		. . PAN-FLOOR used on 001K SEE 25-41-51-130 FOR DET	NP		001
-090F	D2549030500472		. . PAN-FLOOR used on 001L, 001Q SEE 25-41-51-13A FOR DET	NP		001
-090G	D2549020603272		. . PAN-FLOOR used on 001P SEE 25-41-51-13U FOR DET	NP		001
100A	D2549010500073		. . LIGHT-DOOR used on 001A, 001B, 001C, 001D, 001E, 001F, 001G, 001H, 001J, 001L, 001M, 001N, 001P, 001Q SEE 25-41-51-140 FOR DET	NP		001
-100B	D2549020500073		. . LIGHT-DOOR used on 001K SEE 25-41-51-140 FOR DET	NP		001

- ITEM NOT ILLUSTRATED

FIG. ITEM	PART NUMBER	AIRLINE STOCK NUMBER	NOMENCLATURE 1234567		EFF CODE	UNITS PER ASSY
110A	D2549020500274		. . WASHBASIN UNIT used on 001A, 001B, 001C, 001D, 001E, 001F, 001G, 001H, 001L, 001M, 001N, 001P, 001Q SEE 25-41-51-150 FOR DET	NP		001
-110B	D2549010505674		. . WASHBASIN UNIT used on 001J SEE 25-41-51-150 FOR DET	NP		001
-110C	D2549020500074		. . WASHBASIN UNIT used on 001K SEE 25-41-51-15A FOR DET	NP		001
120A	D2549010501875		. . DOOR ASSY-WASHBASIN UNIT used on 001A, 001P SEE 25-41-51-160 FOR DET	NP		001
-120B	D2549010502275		. . DOOR ASSY-WASHBASIN UNIT used on 001B, 001C, 001D, 001E, 001F, 001G, 001H, 001J, 001M, 001N SEE 25-41-51-160 FOR DET	NP		001
-120C	D2549010500475		. . DOOR ASSY-WASHBASIN UNIT used on 001L, 001Q SEE 25-41-51-160 FOR DET	NP		001
-120D	D2549020500075		. . DOOR ASSY-WASHBASIN UNIT used on 001K SEE 25-41-51-160 FOR DET	NP		001
130A	D2549020504076		. . PANEL ASSY-WASHBASIN UNIT used on 001A, 001P SEE 25-41-51-17B FOR DET	NP		001

- ITEM NOT ILLUSTRATED

FIG. ITEM	PART NUMBER	AIRLINE STOCK NUMBER	NOMENCLATURE 1234567		EFF CODE	UNITS PER ASSY
-130B	D2549010502276		. . PANEL ASSY-WASHBASIN UNIT used on 001B, 001C, 001D, 001E, 001F, 001G, 001H, 001J, 001M, 001N SEE 25-41-51-17A FOR DET	NP		001
-130C	D2549010500476		. . PANEL ASSY-WASHBASIN UNIT used on 001L, 001Q SEE 25-41-51-17A FOR DET	NP		001
-130D	D2549020500076		. . PANEL ASSY-WASHBASIN UNIT used on 001K SEE 25-41-51-17A FOR DET	NP		001
140A	D2549010500077		. . BIN-WASTE,CHUTE-WASTE AND EXTINGUISHER-FIRE used on 001A, 001B, 001C, 001D, 001E, 001F, 001G, 001H, 001K, 001L, 001M, 001N, 001P, 001Q SEE 25-41-51-180 FOR DET	NP		001
-140B	D2549020600477		. . BIN-WASTE,CHUTE-WASTE AND EXTINGUISHER-FIRE used on 001J SEE 25-41-51-180 FOR DET	NP		001
150A	D2549020503678		. . CABINET-SERVICE PRE VSB A2-254-25-080 used on 001A, 001L, 001P SEE 25-41-51-19B FOR DET	NP		001
-150B	D2549020600078		. . CABINET-SERVICE used on 001B, 001C, 001G SEE 25-41-51-19B FOR DET	NP		001

- ITEM NOT ILLUSTRATED

FIG. ITEM	PART NUMBER	AIRLINE STOCK NUMBER	NOMENCLATURE 1234567		EFF CODE	UNITS PER ASSY
-150C	D2549020503078		. . CABINET-SERVICE used on 001D, 001M, 001N SEE 25-41-51-19B FOR DET	NP		001
-150D	D2549010500678		. . CABINET-SERVICE used on 001E SEE 25-41-51-19B FOR DET	NP		001
-150E	D2549030503478		. . CABINET-SERVICE used on 001F, 001H SEE 25-41-51-19B FOR DET	NP		001
-150F	D2549010505678		. . CABINET-SERVICE used on 001J SEE 25-41-51-19A FOR DET	NP		001
-150G	D2549030501878		. . CABINET-SERVICE used on 001K SEE 25-41-51-19D FOR DET	NP		001
-150H	R22540118800078		. . CABINET-SERVICE POST VSB A2-254-25-080 used on 001Q SEE 25-41-51-19B FOR DET	NP		001
160A	D2549010500479		. . TABLE-NURSING used on 001A, 001B, 001C, 001D, 001E, 001F, 001G, 001H, 001J, 001L, 001M, 001N, 001P, 001Q SEE 25-41-51-200 FOR DET	NP		001
-160B	D2549020500079		. . TABLE-NURSING used on 001K SEE 25-41-51-200 FOR DET	NP		001

- ITEM NOT ILLUSTRATED

FIG. ITEM	PART NUMBER	AIRLINE STOCK NUMBER	NOMENCLATURE 1234567		EFF CODE	UNITS PER ASSY
170A	D2549010500080		. . VENTILATION SYSTEM used on 001A, 001B, 001C, 001D, 001E, 001F, 001G, 001H, 001J, 001L, 001M, 001N, 001P, 001Q SEE 25-41-51-210 FOR DET	NP		001
-170B	D2549020500080		. . VENTILATION SYSTEM used on 001K SEE 25-41-51-210 FOR DET	NP		001
180A	D2549030500881		. . WATER SYSTEM-POTABLE used on 001A, 001P SEE 25-41-51-220 FOR DET	NP		001
-180B	D2549010501881		. . WATER SYSTEM-POTABLE used on 001B, 001C, 001D, 001E, 001F, 001G, 001H, 001J, 001L, 001M, 001N, 001Q SEE 25-41-51-220 FOR DET	NP		001
-180C	D2549030501881		. . WATER SYSTEM-POTABLE used on 001K SEE 25-41-51-22A FOR DET	NP		001
190A	D2549010500082		. . WATER SYSTEM-WASTE used on 001K SEE 25-41-51-230 FOR DET	NP		001
-190B	D2549030500882		. . WATER SYSTEM-WASTE used on 001A, 001P SEE 25-41-51-230 FOR DET	NP		001
-190C	D2549020600482		. . WATER SYSTEM-WASTE used on 001J SEE 25-41-51-23C FOR DET	NP		001

- ITEM NOT ILLUSTRATED

FIG. ITEM	PART NUMBER	AIRLINE STOCK NUMBER	NOMENCLATURE 1234567		EFF CODE	UNITS PER ASSY
-190D	D2549030500282		. . WATER SYSTEM-WASTE used on 001B, 001C, 001D, 001E, 001F, 001G, 001H, 001L, 001M, 001N, 001Q SEE 25-41-51-230 FOR DET	NP		001
200A	D2549020503283		. . ELECTRICAL SYSTEM used on 001K SEE 25-41-51-26A FOR DET	NP		001
-200B	D2549020600283		. . ELECTRICAL SYSTEM used on 001B SEE 25-41-51-260 FOR DET	NP		001
-200C	D2549030500483		. . ELECTRICAL SYSTEM used on 001A, 001C, 001D, 001E, 001F, 001G, 001H, 001J, 001M, 001N, 001P SEE 25-41-51-260 FOR DET	NP		001
-200D	D2549020602883		. . ELECTRICAL SYSTEM used on 001L, 001Q SEE 25-41-51-26B FOR DET	NP		001

- ITEM NOT ILLUSTRATED

THIS PAGE IS INTENTIONALLY LEFT BLANK

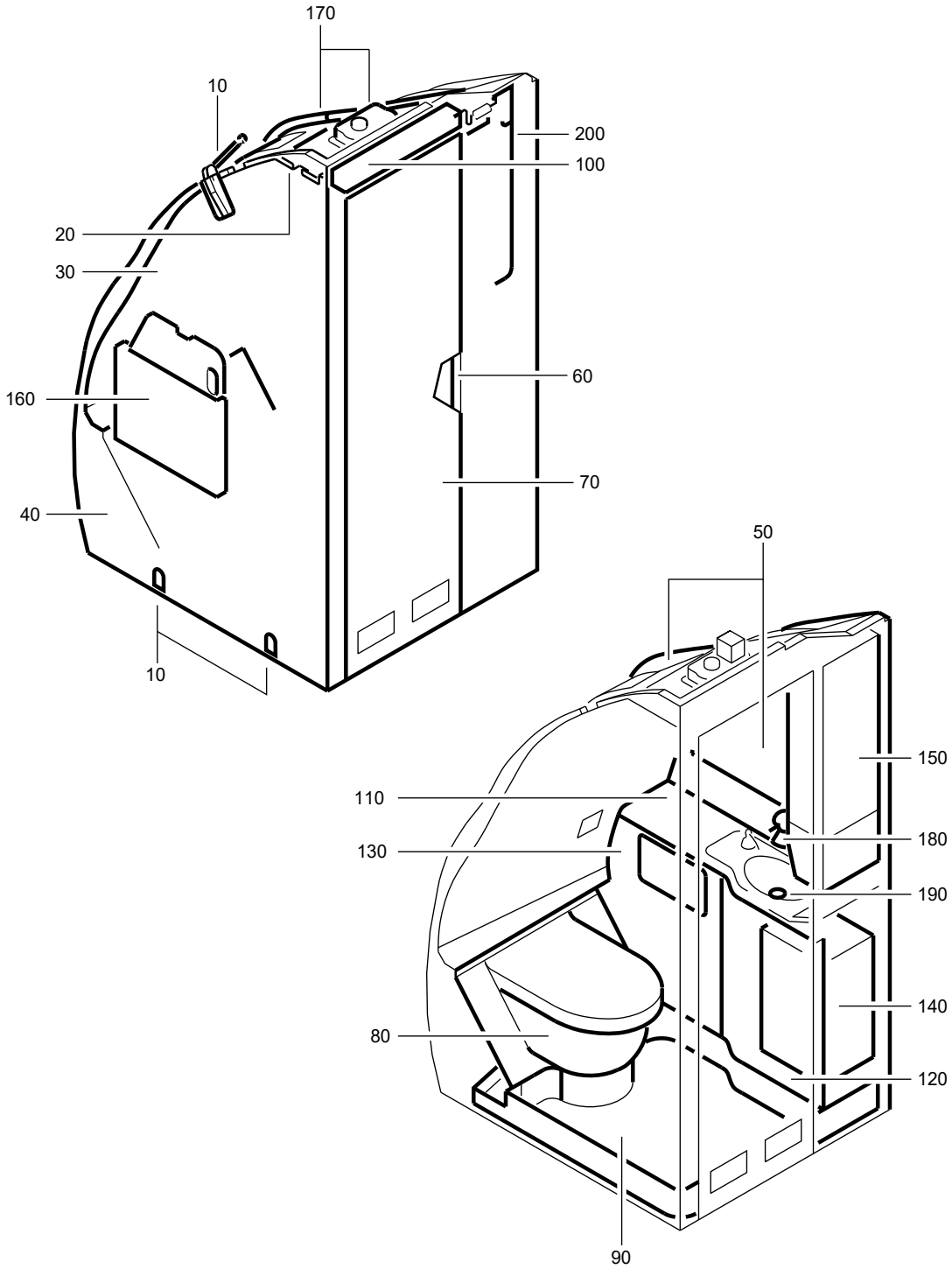

F_PL_254151_01_E_01_00

LAVATORY A ASSY
Figure 01E/EN254151SHEET01E01

FIG. ITEM	PART NUMBER	AIRLINE STOCK NUMBER	NOMENCLATURE 1234567	EFF CODE	UNITS PER ASSY
01E					
-001A	D2549030501400		. LAVATORY A ASSY SEE SIL 25-117 FOR DET		RF
-001B	D2549030501600		. LAVATORY A ASSY SEE SIL 25-117 FOR DET		RF
-001C	D2549020504800		. LAVATORY A ASSY SEE SIL 25-117 FOR DET		RF
-001D	D2549010506200		. LAVATORY A ASSY SEE SIL 25-117 FOR DET		RF
-001E	D2549020504600		. LAVATORY A ASSY SEE SIL 25-117 FOR DET		RF
-001F	D2549010506000		. LAVATORY A ASSY SEE SIL 25-117 FOR DET		RF
-001G	D2549020504400		. LAVATORY A ASSY PRE VSB A2-254-25-057 SEE SIL 25-117 FOR DET		RF
-001H	D2549010506400		. LAVATORY A ASSY SEE SIL 25-117 FOR DET		RF
-001J	D2549020600800		. LAVATORY A ASSY SEE SIL 25-117 FOR DET		RF
-001K	D2549020601200		. LAVATORY A ASSY SEE SIL 25-117 FOR DET		RF
-001L	D2549020601400		. LAVATORY A ASSY SEE SIL 25-117 FOR DET		RF
-001M	D2549010507600		. LAVATORY A ASSY SEE SIL 25-117 FOR DET		RF
-001N	D2549030503000		. LAVATORY A ASSY SEE SIL 25-117 FOR DET		RF

- ITEM NOT ILLUSTRATED

FIG. ITEM	PART NUMBER	AIRLINE STOCK NUMBER	NOMENCLATURE 1234567		EFF CODE	UNITS PER ASSY
-001P	D2549020601400		. LAVATORY A ASSY SEE SIL 25-117 FOR DET			RF
-001Q	R225401115-002		. LAVATORY A ASSY POST VSB A2-254-25-057			RF
010A	D2549010500061		. . ATTACHMENT-LAVATORY used on 001A, 001B, 001D, 001E, 001F, 001G, 001H, 001J, 001L, 001M, 001N, 001P, 001Q SEE 25-41-51-020 FOR DET	NP		001
-010B	D2549020500661		. . ATTACHMENT-LAVATORY used on 001C SEE 25-41-51-020 FOR DET	NP		001
-010C	D2549020601261		. . ATTACHMENT-LAVATORY used on 001K SEE 25-41-51-02C FOR DET	NP		001
020A	D2549010500063		. . PANEL-CEILING used on 001A, 001B, 001D, 001E, 001F, 001G, 001H, 001J, 001K, 001L, 001M, 001N, 001P, 001Q SEE 25-41-51-040 FOR DET	NP		001
-020B	D2549020500063		. . PANEL-CEILING used on 001C SEE 25-41-51-040 FOR DET	NP		001
030A	D2549010500064		. . WALL-REAR used on 001A, 001E, 001F, 001H, 001J, 001L, 001M, 001N, 001P SEE 25-41-51-050 FOR DET	NP		001
-030B	D2549020500064		. . WALL-REAR used on 001C SEE 25-41-51-050 FOR DET	NP		001

- ITEM NOT ILLUSTRATED

FIG. ITEM	PART NUMBER	AIRLINE STOCK NUMBER	NOMENCLATURE 1234567		EFF CODE	UNITS PER ASSY
-030C	D2549020601264		. . WALL-REAR used on 001K SEE 25-41-51-05A FOR DET	NP		001
-030D	R254H155000664		. . WALL-REAR used on 001B, 001G, 001Q SEE 25-41-51-05B FOR DET	NP		001
-030E	D2549010509064		. . WALL-REAR used on 001D SEE 25-41-51-050 FOR DET	NP		001
040A	D2549030500665		. . WALL-SIDE used on 001A, 001N SEE 25-41-51-06B FOR DET	NP		001
-040B	D2549030500265		. . WALL-SIDE used on 001B SEE 25-41-51-06A FOR DET	NP		001
-040C	D2549020500065		. . WALL-SIDE used on 001C SEE 25-41-51-060 FOR DET	NP		001
-040D	D2549010500465		. . WALL-SIDE used on 001D SEE 25-41-51-060 FOR DET	NP		001
-040E	D2549020503665		. . WALL-SIDE used on 001E SEE 25-41-51-06B FOR DET	NP		001
-040F	D2549010502665		. . WALL-SIDE used on 001F, 001M SEE 25-41-51-06B FOR DET	NP		001
-040G	D2549020503065		. . WALL-SIDE used on 001G, 001Q SEE 25-41-51-06B FOR DET	NP		001

- ITEM NOT ILLUSTRATED

FIG. ITEM	PART NUMBER	AIRLINE STOCK NUMBER	NOMENCLATURE 1234567		EFF CODE	UNITS PER ASSY
-040H	D2549010501865		. . WALL-SIDE used on 001H SEE 25-41-51-060 FOR DET	NP		001
-040J	D2549020600865		. . WALL-SIDE used on 001J SEE 25-41-51-06C FOR DET	NP		001
-040K	D2549020601265		. . WALL-SIDE used on 001K SEE 25-41-51-06A FOR DET	NP		001
-040L	D2549010500065		. . WALL-SIDE used on 001L, 001P SEE 25-41-51-06A FOR DET	NP		001
050A	D2549030500666		. . HOUSING used on 001A, 001N SEE 25-41-51-07A FOR DET	NP		001
-050B	D2549030500266		. . HOUSING used on 001B SEE 25-41-51-07A FOR DET	NP		001
-050C	D2549020500066		. . HOUSING used on 001C SEE 25-41-51-070 FOR DET	NP		001
-050D	D2549010502866		. . HOUSING used on 001D SEE 25-41-51-070 FOR DET	NP		001
-050E	D2549020503666		. . HOUSING used on 001E, 001L, 001P SEE 25-41-51-07Y FOR DET	NP		001
-050F	D2549010502666		. . HOUSING used on 001F, 001M SEE 25-41-51-070 FOR DET	NP		001

- ITEM NOT ILLUSTRATED

FIG. ITEM	PART NUMBER	AIRLINE STOCK NUMBER	NOMENCLATURE 1234567		EFF CODE	UNITS PER ASSY
-050G	D2549010502266		. . HOUSING used on 001G, 001Q SEE 25-41-51-070 FOR DET	NP		001
-050H	D2549010501866		. . HOUSING used on 001H SEE 25-41-51-070 FOR DET	NP		001
-050J	D2549020600866		. . HOUSING used on 001J SEE 25-41-51-070 FOR DET	NP		001
-050K	D2549020601266		. . HOUSING used on 001K SEE 25-41-51-07B FOR DET	NP		001
060A	D2549010500069		. . DOOR INSTL used on 001A, 001B, 001C, 001D, 001E, 001F, 001G, 001H, 001J, 001K, 001L, 001M, 001N, 001P, 001Q SEE 25-41-51-100 FOR DET	NP		001
070A	A225400270-500		. . DOOR ASSY-SINGLE used on 001A, 001F, 001M, 001N SEE 25-41-51-110 FOR DET			001
-070B	A225400270-512		. . DOOR ASSY-SINGLE used on 001B SEE 25-41-51-110 FOR DET			001
-070C	A225400270-504		. . DOOR ASSY-SINGLE used on 001C SEE 25-41-51-110 FOR DET			001
-070D	A225400270-502		. . DOOR ASSY-SINGLE used on 001D, 001J SEE 25-41-51-110 FOR DET			001

- ITEM NOT ILLUSTRATED

FIG. ITEM	PART NUMBER	AIRLINE STOCK NUMBER	NOMENCLATURE 1234567		EFF CODE	UNITS PER ASSY
-070E	A225400270-508		. . DOOR ASSY-SINGLE used on 001E SEE 25-41-51-110 FOR DET			001
-070F	A225400270-506		. . DOOR ASSY-SINGLE used on 001G, 001Q SEE 25-41-51-110 FOR DET			001
-070G	A225400270-510		. . DOOR ASSY-SINGLE used on 001H SEE 25-41-51-110 FOR DET			001
-070H	A225400270-526		. . DOOR ASSY-SINGLE used on 001K SEE 25-41-51-11A FOR DET			001
-070J	A225400270-906		. . DOOR ASSY-SINGLE used on 001L, 001P SEE 25-41-51-11A FOR DET			001
080A	D2549030501471		. . TOILET UNIT AND TOILET SHROUD used on 001A SEE 25-41-51-120 FOR DET	NP		001
-080B	D2549030503071		. . TOILET UNIT AND TOILET SHROUD used on 001N SEE 25-41-51-12A FOR DET	NP		001
-080C	D2549020504871		. . TOILET UNIT AND TOILET SHROUD used on 001C SEE 25-41-51-12A FOR DET	NP		001
-080D	D2549010507071		. . TOILET UNIT AND TOILET SHROUD used on 001B, 001D, 001G, 001Q SEE 25-41-51-12A FOR DET	NP		001

- ITEM NOT ILLUSTRATED

FIG. ITEM	PART NUMBER	AIRLINE STOCK NUMBER	NOMENCLATURE 1234567		EFF CODE	UNITS PER ASSY
-080E	D2549010506071		. . TOILET UNIT AND TOILET SHROUD used on 001F SEE 25-41-51-12A FOR DET	NP		001
-080F	D2549010506471		. . TOILET UNIT AND TOILET SHROUD used on 001H SEE 25-41-51-12A FOR DET	NP		001
-080G	D2549020601271		. . TOILET UNIT AND TOILET SHROUD used on 001K SEE 25-41-51-12A FOR DET	NP		001
-080H	D2549020601471		. . TOILET UNIT AND TOILET SHROUD used on 001L, 001P SEE 25-41-51-12A FOR DET	NP		001
-080J	D2549010507471		. . TOILET UNIT AND TOILET SHROUD used on 001E, 001J SEE 25-41-51-12A FOR DET	NP		001
-080K	D2549010507671		. . TOILET UNIT AND TOILET SHROUD used on 001M SEE 25-41-51-12A FOR DET	NP		001
090A	D2549010500072		. . PAN-FLOOR used on 001A, 001F, 001M, 001N SEE 25-41-51-130 FOR DET	NP		001
-090B	D2549010501072		. . PAN-FLOOR used on 001B SEE 25-41-51-130 FOR DET	NP		001
-090C	D2549020500072		. . PAN-FLOOR used on 001C SEE 25-41-51-130 FOR DET	NP		001

- ITEM NOT ILLUSTRATED

FIG. ITEM	PART NUMBER	AIRLINE STOCK NUMBER	NOMENCLATURE 1234567	EFF CODE	UNITS PER ASSY
-090D	D2549010500472		. . PAN-FLOOR NP used on 001D SEE 25-41-51-130 FOR DET		001
-090E	D2549020500272		. . PAN-FLOOR NP used on 001E, 001G, 001J, 001Q SEE 25-41-51-130 FOR DET		001
-090F	D2549010500672		. . PAN-FLOOR NP used on 001H SEE 25-41-51-130 FOR DET		001
-090G	D2549020601272		. . PAN-FLOOR NP used on 001K SEE 25-41-51-130 FOR DET		001
-090H	D2549020601472		. . PAN-FLOOR NP used on 001L, 001P SEE 25-41-51-130 FOR DET		001
100A	D2549010500073		. . LIGHT-DOOR NP used on 001A, 001B, 001D, 001E, 001F, 001G, 001H, 001J, 001K, 001L, 001M, 001N, 001P, 001Q SEE 25-41-51-140 FOR DET		001
-100B	D2549020500073		. . LIGHT-DOOR NP used on 001C SEE 25-41-51-140 FOR DET		001
-110A	D2549010500074		. . WASHBASIN UNIT NP used on 001A, 001F, 001M, 001N SEE 25-41-51-150 FOR DET		001
-110B	D2549020500274		. . WASHBASIN UNIT NP used on 001B, 001D, 001E, 001G, 001H, 001J, 001K, 001L, 001P, 001Q SEE 25-41-51-150 FOR DET		001

- ITEM NOT ILLUSTRATED

FIG. ITEM	PART NUMBER	AIRLINE STOCK NUMBER	NOMENCLATURE 1234567	EFF CODE	UNITS PER ASSY
-110C	D2549020500074		. . WASHBASIN UNIT NP used on 001C SEE 25-41-51-15A FOR DET		001
120A	D2549010500075		. . DOOR ASSY-WASHBASIN UNIT NP used on 001A, 001F, 001M, 001N SEE 25-41-51-160 FOR DET		001
-120B	D2549010500475		. . DOOR ASSY-WASHBASIN UNIT NP used on 001B, 001D, 001G, 001Q SEE 25-41-51-160 FOR DET		001
-120C	D2549020500075		. . DOOR ASSY-WASHBASIN UNIT NP used on 001C SEE 25-41-51-160 FOR DET		001
-120D	D2549010502275		. . DOOR ASSY-WASHBASIN UNIT NP used on 001E, 001J SEE 25-41-51-160 FOR DET		001
-120E	D2549010501875		. . DOOR ASSY-WASHBASIN UNIT NP used on 001H SEE 25-41-51-160 FOR DET		001
-120F	D2549020601275		. . DOOR ASSY-WASHBASIN UNIT NP used on 001K SEE 25-41-51-160 FOR DET		001
-120G	D2549020601475		. . DOOR ASSY-WASHBASIN UNIT NP used on 001L, 001P SEE 25-41-51-160 FOR DET		001

- ITEM NOT ILLUSTRATED

FIG. ITEM	PART NUMBER	AIRLINE STOCK NUMBER	NOMENCLATURE 1234567	EFF CODE	UNITS PER ASSY
130A	D2549030500676		. . PANEL ASSY-WASHBASIN UNIT NP used on 001A, 001N SEE 25-41-51-17B FOR DET		001
-130B	D2549010500476		. . PANEL ASSY-WASHBASIN UNIT NP used on 001B, 001D, 001G, 001Q SEE 25-41-51-17A FOR DET		001
-130C	D2549020500076		. . PANEL ASSY-WASHBASIN UNIT NP used on 001C SEE 25-41-51-17A FOR DET		001
-130D	D2549010502276		. . PANEL ASSY-WASHBASIN UNIT NP used on 001E, 001J SEE 25-41-51-17A FOR DET		001
-130E	D2549010500076		. . PANEL ASSY-WASHBASIN UNIT NP used on 001F, 001M SEE 25-41-51-170 FOR DET		001
-130F	D2549010501876		. . PANEL ASSY-WASHBASIN UNIT NP used on 001H SEE 25-41-51-17A FOR DET		001
-130G	D2549020601276		. . PANEL ASSY-WASHBASIN UNIT NP used on 001K SEE 25-41-51-17A FOR DET		001
-130H	D2549020601476		. . PANEL ASSY-WASHBASIN UNIT NP used on 001L, 001P SEE 25-41-51-17A FOR DET		001

- ITEM NOT ILLUSTRATED

FIG. ITEM	PART NUMBER	AIRLINE STOCK NUMBER	NOMENCLATURE 1234567		EFF CODE	UNITS PER ASSY
140A	D2549010500077		. . BIN-WASTE,CHUTE-WASTE AND EXTINGUISHER-FIRE used on 001A, 001B, 001E, 001F, 001G, 001H, 001J, 001K, 001L, 001M, 001N, 001P, 001Q SEE 25-41-51-180 FOR DET	NP		001
-140B	D2549020500077		. . BIN-WASTE,CHUTE-WASTE AND EXTINGUISHER-FIRE used on 001C SEE 25-41-51-180 FOR DET	NP		001
-140C	D2549010502877		. . BIN-WASTE,CHUTE-WASTE AND EXTINGUISHER-FIRE used on 001D SEE 25-41-51-180 FOR DET	NP		001
150A	D2549030500678		. . CABINET-SERVICE used on 001A, 001N SEE 25-41-51-190 FOR DET	NP		001
-150B	D2549010501078		. . CABINET-SERVICE used on 001B, 001H SEE 25-41-51-19C FOR DET	NP		001
-150C	D2549020500078		. . CABINET-SERVICE used on 001C SEE 25-41-51-19D FOR DET	NP		001
-150D	D2549010502878		. . CABINET-SERVICE used on 001D SEE 25-41-51-19B FOR DET	NP		001
-150E	D2549020503678		. . CABINET-SERVICE used on 001E, 001K SEE 25-41-51-19B FOR DET	NP		001
-150F	D2549010500078		. . CABINET-SERVICE used on 001F, 001M SEE 25-41-51-190 FOR DET	NP		001

- ITEM NOT ILLUSTRATED

FIG. ITEM	PART NUMBER	AIRLINE STOCK NUMBER	NOMENCLATURE 1234567	EFF CODE	UNITS PER ASSY
-150G	D2549020503078		. . CABINET-SERVICE NP used on 001G, 001Q SEE 25-41-51-19B FOR DET		001
-150H	D2549020600078		. . CABINET-SERVICE NP used on 001J, 001L, 001P SEE 25-41-51-19B FOR DET		001
160A	D2549010500079		. . TABLE-NURSING NP used on 001A, 001F, 001J, 001M, 001N SEE 25-41-51-200 FOR DET		001
-160B	D2549010500479		. . TABLE-NURSING NP used on 001E, 001H, 001K, 001L, 001P SEE 25-41-51-200 FOR DET		001
-160C	D2549020500079		. . TABLE-NURSING NP used on 001C SEE 25-41-51-200 FOR DET		001
-160D	D2549010512679		. . TABLE-NURSING NP used on 001B, 001G, 001Q SEE 25-41-51-20A FOR DET		001
-160E	D2549010510679		. . TABLE-NURSING NP used on 001D SEE 25-41-51-20A FOR DET		001
170A	D2549010500080		. . VENTILATION SYSTEM NP used on 001A, 001B, 001E, 001F, 001G, 001H, 001J, 001K, 001L, 001M, 001N, 001P, 001Q SEE 25-41-51-210 FOR DET		001
-170B	D2549020500080		. . VENTILATION SYSTEM NP used on 001C SEE 25-41-51-210 FOR DET		001

- ITEM NOT ILLUSTRATED

FIG. ITEM	PART NUMBER	AIRLINE STOCK NUMBER	NOMENCLATURE 1234567		EFF CODE	UNITS PER ASSY
-170C	D2549010500480		. . VENTILATION SYSTEM used on 001D SEE 25-41-51-210 FOR DET	NP		001
180A	D2549010501881		. . WATER SYSTEM-POTABLE used on 001A, 001B, 001D, 001E, 001F, 001G, 001H, 001J, 001K, 001L, 001M, 001N, 001Q SEE 25-41-51-220 FOR DET	NP		001
-180B	D2549020500081		. . WATER SYSTEM-POTABLE used on 001C SEE 25-41-51-22A FOR DET	NP		001
-180C	D2549010501881		. . WATER SYSTEM-POTABLE used on 001P SEE 25-41-51-220 FOR DET	NP		001
190A	D2549010500082		. . WATER SYSTEM-WASTE used on 001C SEE 25-41-51-230 FOR DET	NP		001
-190B	D2549030500282		. . WATER SYSTEM-WASTE used on 001A, 001B, 001D, 001E, 001F, 001G, 001H, 001J, 001K, 001L, 001M, 001N, 001Q SEE 25-41-51-230 FOR DET	NP		001
-190C	D2549030500282		. . WATER SYSTEM-WASTE used on 001P SEE 25-41-51-230 FOR DET	NP		001
200A	D2549030500483		. . ELECTRICAL SYSTEM used on 001A, 001B, 001E, 001F, 001G, 001H, 001J, 001K, 001L, 001M, 001N, 001P, 001Q SEE 25-41-51-260 FOR DET	NP		001
-200B	D2549020503283		. . ELECTRICAL SYSTEM used on 001C SEE 25-41-51-26A FOR DET	NP		001

- ITEM NOT ILLUSTRATED

FIG. ITEM	PART NUMBER	AIRLINE STOCK NUMBER	NOMENCLATURE 1234567	EFF CODE	UNITS PER ASSY
-200C	D2549010503483		. . ELECTRICAL SYSTEM NP used on 001D SEE 25-41-51-260 FOR DET		001

- ITEM NOT ILLUSTRATED

THIS PAGE IS INTENTIONALLY LEFT BLANK

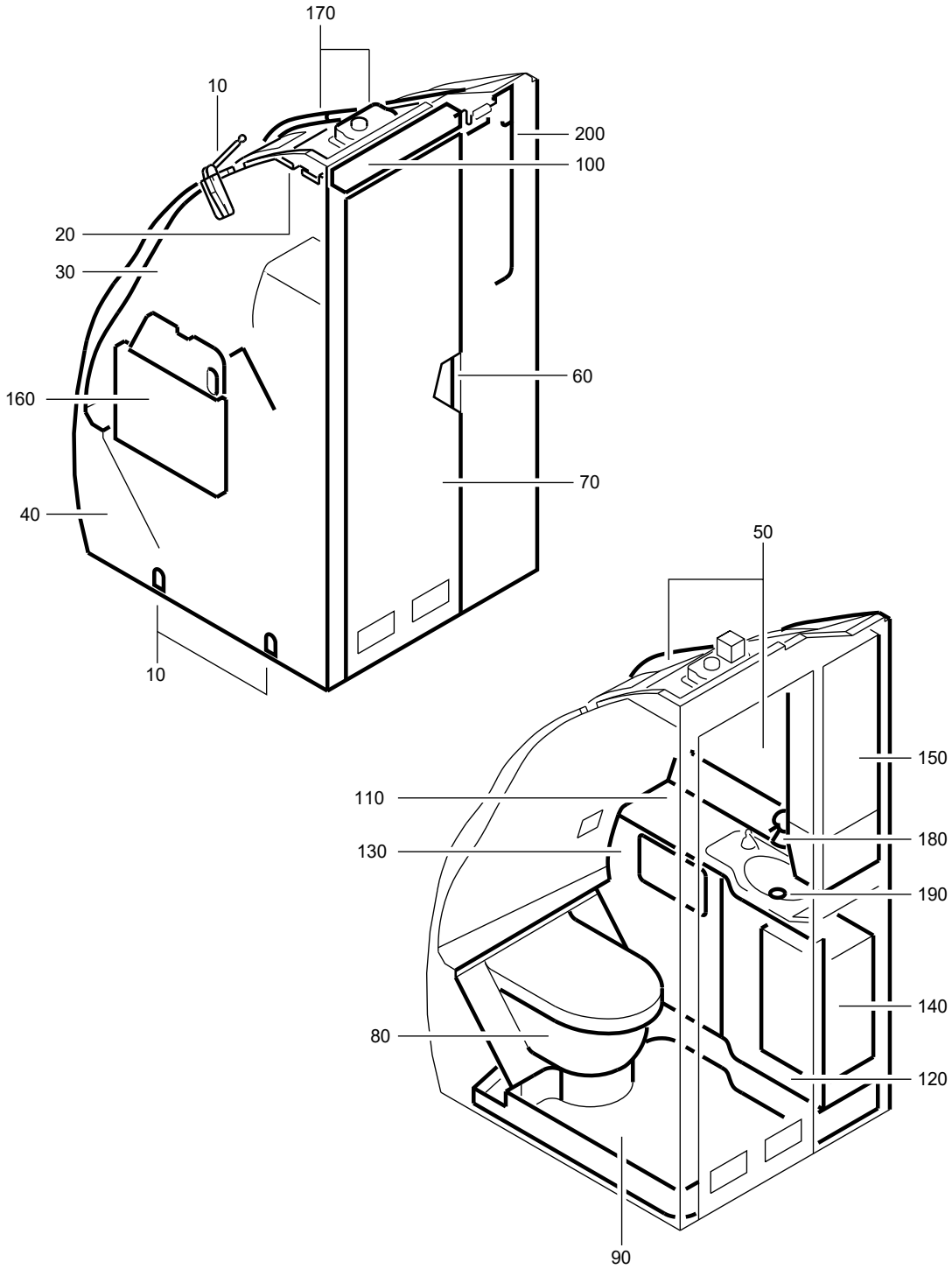

F_PL_254151_01_F_01_00

LAVATORY A ASSY
Figure 01F/EN254151SHEET01F01

FIG. ITEM	PART NUMBER	AIRLINE STOCK NUMBER	NOMENCLATURE 1234567	EFF CODE	UNITS PER ASSY
01F					
-001A	D2549020601600		. LAVATORY A ASSY PRE VSB A2-254-25-059 SEE SIL 25-117 FOR DET		RF
-001B	D2549010507200		. LAVATORY A ASSY SEE SIL 25-117 FOR DET		RF
-001C	D2549030502400		. LAVATORY A ASSY SEE SIL 25-117 FOR DET		RF
-001D	D2549010507400		. LAVATORY A ASSY SEE SIL 25-117 FOR DET		RF
-001E	D2549010507000		. LAVATORY A ASSY SEE SIL 25-117 FOR DET		RF
-001F	D2549020601000		. LAVATORY A ASSY SEE SIL 25-117 FOR DET		RF
-001G	D2549020602000		. LAVATORY A ASSY POST SB 38-1055 SEE SIL 25-117 FOR DET		RF
-001H	D2549030502600		. LAVATORY A ASSY PRE VSB A2-254-25-131 SEE SIL 25-117 FOR DET		RF
-001J	D2549020506000		. LAVATORY A ASSY SEE SIL 25-117 FOR DET		RF
-001K	D2549020505800		. LAVATORY A ASSY SEE SIL 25-117 FOR DET		RF
-001L	D2549020602400		. LAVATORY A ASSY PRE VSB A2-254-25-057 SEE SIL 25-117 FOR DET		RF
-001M	D2549030503400		. LAVATORY A ASSY SEE SIL 25-117 FOR DET		RF

- ITEM NOT ILLUSTRATED

FIG. ITEM	PART NUMBER	AIRLINE STOCK NUMBER	NOMENCLATURE 1234567	EFF CODE	UNITS PER ASSY
-001N	D2549020505200		. LAVATORY A ASSY SEE SIL 25-117 FOR DET		RF
-001P	D2549020601600		. LAVATORY A ASSY SEE SIL 25-117 FOR DET		RF
-001Q	R225401133-000		. LAVATORY A ASSY POST VSB A2-254-25-059 SEE SIL 25-117 FOR DET		RF
-001R	R225401139-000		. LAVATORY A ASSY POST VSB A2-254-25-057		RF
-001S	R225401188-006		. LAVATORY A ASSY POST VSB A2-254-25-131		RF
010A	D2549010500061		. . ATTACHMENT-LAVATORY NP used on 001A, 001B, 001D, 001E, 001F, 001G, 001H, 001L, 001M, 001P, 001Q, 001R, 001S SEE 25-41-51-020 FOR DET		001
-010B	D2549020500661		. . ATTACHMENT-LAVATORY NP used on 001C, 001J, 001N SEE 25-41-51-020 FOR DET		001
-010C	D2549020610061		. . ATTACHMENT-LAVATORY NP used on 001K SEE 25-41-51-02D FOR DET		001
020A	D2549010500063		. . PANEL-CEILING NP used on 001A, 001B, 001D, 001E, 001F, 001G, 001H, 001K, 001L, 001M, 001P, 001Q, 001R, 001S SEE 25-41-51-040 FOR DET		001
-020B	D2549020500063		. . PANEL-CEILING NP used on 001C, 001J, 001N SEE 25-41-51-040 FOR DET		001

- ITEM NOT ILLUSTRATED

FIG. ITEM	PART NUMBER	AIRLINE STOCK NUMBER	NOMENCLATURE 1234567		EFF CODE	UNITS PER ASSY
030A	D2549010500064		. . WALL-REAR used on 001A, 001B, 001F, 001H, 001L, 001P, 001Q, 001R, 001S SEE 25-41-51-050 FOR DET	NP		001
-030B	D2549030501864		. . WALL-REAR used on 001C SEE 25-41-51-05A FOR DET	NP		001
-030C	D2549020500064		. . WALL-REAR used on 001J, 001N SEE 25-41-51-050 FOR DET	NP		001
-030D	D2549030503464		. . WALL-REAR used on 001M SEE 25-41-51-050 FOR DET	NP		001
-030E	D2549010501064		. . WALL-REAR used on 001K SEE 25-41-51-05A FOR DET	NP		001
-030F	D2549010509064		. . WALL-REAR used on 001E, 001G SEE 25-41-51-050 FOR DET	NP		001
-030G	D2549020611664		. . WALL-REAR used on 001D SEE 25-41-51-05A FOR DET	NP		001
040A	D2549020500065		. . WALL-SIDE used on 001A, 001P, 001Q SEE 25-41-51-060 FOR DET	NP		001
-040B	D2549010507265		. . WALL-SIDE used on 001B SEE 25-41-51-06B FOR DET	NP		001
-040C	D2549030502465		. . WALL-SIDE used on 001C SEE 25-41-51-06C FOR DET	NP		001

- ITEM NOT ILLUSTRATED

FIG. ITEM	PART NUMBER	AIRLINE STOCK NUMBER	NOMENCLATURE 1234567	EFF CODE	UNITS PER ASSY
-040D	D2549010504465		. . WALL-SIDE NP used on 001D SEE 25-41-51-48E FOR DET		001
-040E	D2549010507065		. . WALL-SIDE NP used on 001E SEE 25-41-51-06D FOR DET		001
-040F	D2549020601065		. . WALL-SIDE NP used on 001F SEE 25-41-51-06D FOR DET		001
-040G	D2549020602065		. . WALL-SIDE NP used on 001G SEE 25-41-51-06D FOR DET		001
-040H	D2549030502665		. . WALL-SIDE NP used on 001H, 001S SEE 25-41-51-06C FOR DET		001
-040J	D2549020506065		. . WALL-SIDE NP used on 001J SEE 25-41-51-06D FOR DET		001
-040K	D2549010502065		. . WALL-SIDE NP used on 001K SEE 25-41-51-48E FOR DET		001
-040L	D2549020602465		. . WALL-SIDE NP used on 001L, 001R SEE 25-41-51-06D FOR DET		001
-040M	D2549030503465		. . WALL-SIDE NP used on 001M SEE 25-41-51-06D FOR DET		001
-040N	D2549020505265		. . WALL-SIDE NP used on 001N SEE 25-41-51-06D FOR DET		001

- ITEM NOT ILLUSTRATED

FIG. ITEM	PART NUMBER	AIRLINE STOCK NUMBER	NOMENCLATURE 1234567		EFF CODE	UNITS PER ASSY
050A	D2549020503666		. . HOUSING PRE VSB A2-254-25-059 used on 001A, 001P SEE 25-41-51-07Y FOR DET	NP		001
-050B	D2549010501866		. . HOUSING used on 001B SEE 25-41-51-070 FOR DET	NP		001
-050C	D2549030501866		. . HOUSING used on 001C SEE 25-41-51-07B FOR DET	NP		001
-050D	D2549010504466		. . HOUSING used on 001D, 001L, 001R SEE 25-41-51-07Y FOR DET	NP		001
-050E	D2549010502866		. . HOUSING used on 001E SEE 25-41-51-070 FOR DET	NP		001
-050F	D2549020601066		. . HOUSING used on 001F SEE 25-41-51-07Y FOR DET	NP		001
-050G	D2549020602066		. . HOUSING used on 001G SEE 25-41-51-070 FOR DET	NP		001
-050H	D2549030502666		. . HOUSING used on 001H, 001S SEE 25-41-51-07C FOR DET	NP		001
-050J	D2549020500066		. . HOUSING used on 001J, 001N SEE 25-41-51-070 FOR DET	NP		001
-050K	D2549010501066		. . HOUSING used on 001K SEE 25-41-51-07Y FOR DET	NP		001

- ITEM NOT ILLUSTRATED

FIG. ITEM	PART NUMBER	AIRLINE STOCK NUMBER	NOMENCLATURE 1234567	EFF CODE	UNITS PER ASSY
-050L	D2549030503466		. . HOUSING NP used on 001M SEE 25-41-51-07Y FOR DET		001
-050M	R22540113300066		. . HOUSING NP POST VSB A2-254-25-059 used on 001Q SEE 25-41-51-07Y FOR DET		001
060A	D2549010500069		. . DOOR INSTL NP used on 001A, 001B, 001C, 001D, 001E, 001F, 001G, 001H, 001J, 001K, 001L, 001M, 001N, 001P, 001Q, 001R, 001S SEE 25-41-51-100 FOR DET		001
070A	A225400270-906		. . DOOR ASSY-SINGLE used on 001A, 001P, 001Q SEE 25-41-51-11A FOR DET		001
-070B	A225400270-510		. . DOOR ASSY-SINGLE used on 001B SEE 25-41-51-110 FOR DET		001
-070C	A225400270-504		. . DOOR ASSY-SINGLE used on 001C, 001J, 001N SEE 25-41-51-110 FOR DET		001
-070D	A225400270-508		. . DOOR ASSY-SINGLE used on 001D, 001L, 001R SEE 25-41-51-110 FOR DET		001
-070E	A225400270-502		. . DOOR ASSY-SINGLE used on 001E SEE 25-41-51-110 FOR DET		001
-070F	A225400270-908		. . DOOR ASSY-SINGLE used on 001F SEE 25-41-51-11A FOR DET		001

- ITEM NOT ILLUSTRATED

FIG. ITEM	PART NUMBER	AIRLINE STOCK NUMBER	NOMENCLATURE 1234567		EFF CODE	UNITS PER ASSY
-070G	A225400270-528		. . DOOR ASSY-SINGLE used on 001G SEE 25-41-51-11A FOR DET			001
-070H	A225400270-530		. . DOOR ASSY-SINGLE used on 001H, 001S SEE 25-41-51-11A FOR DET			001
-070J	A225400270-512		. . DOOR ASSY-SINGLE used on 001K SEE 25-41-51-110 FOR DET			001
-070K	A225400270-532		. . DOOR ASSY-SINGLE used on 001M SEE 25-41-51-11A FOR DET			001
080A	D2549020601471		. . TOILET UNIT AND TOILET SHROUD used on 001A, 001P, 001Q SEE 25-41-51-12A FOR DET	NP		001
-080B	D2549010506471		. . TOILET UNIT AND TOILET SHROUD used on 001B SEE 25-41-51-12A FOR DET	NP		001
-080C	D2549030502471		. . TOILET UNIT AND TOILET SHROUD used on 001C, 001J, 001N SEE 25-41-51-12A FOR DET	NP		001
-080D	D2549010507471		. . TOILET UNIT AND TOILET SHROUD used on 001D, 001F, 001G, 001H, 001L, 001M, 001R, 001S SEE 25-41-51-12A FOR DET	NP		001
-080E	D2549010507071		. . TOILET UNIT AND TOILET SHROUD used on 001E, 001K SEE 25-41-51-12A FOR DET	NP		001

- ITEM NOT ILLUSTRATED

FIG. ITEM	PART NUMBER	AIRLINE STOCK NUMBER	NOMENCLATURE 1234567	EFF CODE	UNITS PER ASSY
090A	D2549020601472		. . PAN-FLOOR NP used on 001A, 001P, 001Q SEE 25-41-51-130 FOR DET		001
-090B	D2549010500672		. . PAN-FLOOR NP used on 001B, 001G, 001M SEE 25-41-51-130 FOR DET		001
-090C	D2549020500072		. . PAN-FLOOR NP used on 001C, 001J, 001N SEE 25-41-51-130 FOR DET		001
-090D	D2549020500272		. . PAN-FLOOR NP used on 001F SEE 25-41-51-130 FOR DET		001
-090E	D2549010500472		. . PAN-FLOOR NP used on 001E SEE 25-41-51-130 FOR DET		001
-090F	D2549010502072		. . PAN-FLOOR NP used on 001K SEE 25-41-51-130 FOR DET		001
-090G	D2549020602472		. . PAN-FLOOR NP used on 001L, 001R SEE 25-41-51-13A FOR DET		001
-090H	D2549030502672		. . PAN-FLOOR NP PRE VSB A2-254-25-131 used on 001H SEE 25-41-51-130 FOR DET		001
-090J	D2549010504472		. . PAN-FLOOR NP used on 001D SEE 25-41-51-13B FOR DET		001
-090K	R22540118800672		. . PAN-FLOOR NP POST VSB A2-254-25-131 used on 001S SEE 25-41-51-130 FOR DET		001

- ITEM NOT ILLUSTRATED

FIG. ITEM	PART NUMBER	AIRLINE STOCK NUMBER	NOMENCLATURE 1234567	EFF CODE	UNITS PER ASSY
100A	D2549010500073		. . LIGHT-DOOR NP used on 001A, 001B, 001D, 001E, 001F, 001G, 001H, 001K, 001L, 001M, 001P, 001Q, 001R, 001S SEE 25-41-51-140 FOR DET		001
-100B	D2549020500073		. . LIGHT-DOOR NP used on 001C, 001J, 001N SEE 25-41-51-140 FOR DET		001
110A	D2549020500274		. . WASHBASIN UNIT NP used on 001A, 001B, 001D, 001E, 001F, 001G, 001K, 001L, 001P, 001Q, 001R SEE 25-41-51-150 FOR DET		001
-110B	D2549020500074		. . WASHBASIN UNIT NP used on 001C, 001J, 001N SEE 25-41-51-15A FOR DET		001
-110C	D2549030502674		. . WASHBASIN UNIT NP used on 001H, 001M, 001S SEE 25-41-51-150 FOR DET		001
120A	D2549020601475		. . DOOR ASSY-WASHBASIN UNIT NP used on 001A, 001P, 001Q SEE 25-41-51-160 FOR DET		001
-120B	D2549010501875		. . DOOR ASSY-WASHBASIN UNIT NP used on 001B SEE 25-41-51-160 FOR DET		001
-120C	D2549020500075		. . DOOR ASSY-WASHBASIN UNIT NP used on 001C, 001J, 001N SEE 25-41-51-160 FOR DET		001

- ITEM NOT ILLUSTRATED

FIG. ITEM	PART NUMBER	AIRLINE STOCK NUMBER	NOMENCLATURE 1234567	EFF CODE	UNITS PER ASSY
-120D	D2549010502275		. . DOOR ASSY-WASHBASIN UNIT NP used on 001D, 001F, 001G, 001H, 001L, 001M, 001R, 001S SEE 25-41-51-160 FOR DET		001
-120E	D2549010500475		. . DOOR ASSY-WASHBASIN UNIT NP used on 001E, 001K SEE 25-41-51-160 FOR DET		001
130A	D2549020601676		. . PANEL ASSY-WASHBASIN UNIT NP used on 001A, 001P, 001Q SEE 25-41-51-17A FOR DET		001
-130B	D2549010501876		. . PANEL ASSY-WASHBASIN UNIT NP used on 001B SEE 25-41-51-17A FOR DET		001
-130C	D2549020500076		. . PANEL ASSY-WASHBASIN UNIT NP used on 001C, 001J, 001N SEE 25-41-51-17A FOR DET		001
-130D	D2549010502276		. . PANEL ASSY-WASHBASIN UNIT NP used on 001D, 001F, 001H, 001L, 001M, 001R, 001S SEE 25-41-51-17A FOR DET		001
-130E	D2549010500476		. . PANEL ASSY-WASHBASIN UNIT NP used on 001E, 001K SEE 25-41-51-17A FOR DET		001
-130F	D2549020602076		. . PANEL ASSY-WASHBASIN UNIT NP used on 001G SEE 25-41-51-17A FOR DET		001

- ITEM NOT ILLUSTRATED

FIG. ITEM	PART NUMBER	AIRLINE STOCK NUMBER	NOMENCLATURE 1234567		EFF CODE	UNITS PER ASSY
140A	D2549010500077		. . BIN-WASTE,CHUTE-WASTE AND EXTINGUISHER-FIRE used on 001A, 001B, 001C, 001D, 001F, 001H, 001K, 001L, 001M, 001P, 001Q, 001R, 001S SEE 25-41-51-180 FOR DET	NP		001
-140B	D2549010502877		. . BIN-WASTE,CHUTE-WASTE AND EXTINGUISHER-FIRE used on 001E SEE 25-41-51-180 FOR DET	NP		001
-140C	D2549020500077		. . BIN-WASTE,CHUTE-WASTE AND EXTINGUISHER-FIRE used on 001J, 001N SEE 25-41-51-180 FOR DET	NP		001
-140D	D2549020600477		. . BIN-WASTE,CHUTE-WASTE AND EXTINGUISHER-FIRE used on 001G SEE 25-41-51-180 FOR DET	NP		001
150A	D2549020600078		. . CABINET-SERVICE PRE VSB A2-254-25-059 used on 001A, 001P SEE 25-41-51-19B FOR DET	NP		001
-150B	D2549010501078		. . CABINET-SERVICE used on 001B, 001K SEE 25-41-51-19C FOR DET	NP		001
-150C	D2549030501878		. . CABINET-SERVICE used on 001C SEE 25-41-51-19D FOR DET	NP		001
-150D	D2549020503678		. . CABINET-SERVICE used on 001D SEE 25-41-51-19B FOR DET	NP		001

- ITEM NOT ILLUSTRATED

FIG. ITEM	PART NUMBER	AIRLINE STOCK NUMBER	NOMENCLATURE 1234567		EFF CODE	UNITS PER ASSY
-150E	D2549010502878		. . CABINET-SERVICE used on 001E SEE 25-41-51-19B FOR DET	NP		001
-150F	D2549020601078		. . CABINET-SERVICE used on 001F, 001L, 001R SEE 25-41-51-19B FOR DET	NP		001
-150G	D2549020602078		. . CABINET-SERVICE used on 001G SEE 25-41-51-19D FOR DET	NP		001
-150H	D2549030502678		. . CABINET-SERVICE used on 001H, 001S SEE 25-41-51-19A FOR DET	NP		001
-150J	D2549020500078		. . CABINET-SERVICE used on 001J SEE 25-41-51-19D FOR DET	NP		001
-150K	D2549030503478		. . CABINET-SERVICE used on 001M SEE 25-41-51-19B FOR DET	NP		001
-150L	D2549020505278		. . CABINET-SERVICE used on 001N SEE 25-41-51-19D FOR DET	NP		001
-150M	R22540113300078		. . CABINET-SERVICE POST VSB A2-254-25-059 used on 001Q SEE 25-41-51-19B FOR DET	NP		001
160A	D2549010500479		. . TABLE-NURSING used on 001A, 001B, 001D, 001F, 001H, 001L, 001M, 001P, 001Q, 001R, 001S SEE 25-41-51-200 FOR DET	NP		001

- ITEM NOT ILLUSTRATED

FIG. ITEM	PART NUMBER	AIRLINE STOCK NUMBER	NOMENCLATURE 1234567		EFF CODE	UNITS PER ASSY
-160B	D2549020500079		. . TABLE-NURSING used on 001C, 001J, 001N SEE 25-41-51-200 FOR DET	NP		001
-160C	D2549010512679		. . TABLE-NURSING used on 001K SEE 25-41-51-20A FOR DET	NP		001
-160D	D2549010510679		. . TABLE-NURSING used on 001E, 001G SEE 25-41-51-20A FOR DET	NP		001
170A	D2549010500080		. . VENTILATION SYSTEM used on 001A, 001B, 001D, 001F, 001G, 001H, 001K, 001L, 001M, 001P, 001Q, 001R, 001S SEE 25-41-51-210 FOR DET	NP		001
-170B	D2549020500080		. . VENTILATION SYSTEM used on 001C, 001J, 001N SEE 25-41-51-210 FOR DET	NP		001
-170C	D2549010500480		. . VENTILATION SYSTEM used on 001E SEE 25-41-51-210 FOR DET	NP		001
180A	D2549010501881		. . WATER SYSTEM-POTABLE PRE VSB A2-254-25-059 used on 001A, 001B, 001D, 001E, 001F, 001G, 001H, 001K, 001L, 001M, 001R, 001S SEE 25-41-51-220 FOR DET	NP		001
-180B	D2549030501881		. . WATER SYSTEM-POTABLE used on 001C SEE 25-41-51-22A FOR DET	NP		001
-180C	D2549020500081		. . WATER SYSTEM-POTABLE used on 001J, 001N SEE 25-41-51-22A FOR DET	NP		001

- ITEM NOT ILLUSTRATED

FIG. ITEM	PART NUMBER	AIRLINE STOCK NUMBER	NOMENCLATURE 1234567	EFF CODE	UNITS PER ASSY
-180D	D2549010501881		. . WATER SYSTEM-POTABLE NP used on 001P SEE 25-41-51-220 FOR DET		001
-180E	R22540113300081		. . WATER SYSTEM-POTABLE NP POST VSB A2-254-25-059 used on 001Q SEE 25-41-51-220 FOR DET		001
190A	D2549030500282		. . WATER SYSTEM-WASTE NP PRE VSB A2-254-25-059 used on 001A, 001B, 001D, 001E, 001F, 001K, 001L, 001R SEE 25-41-51-230 FOR DET		001
-190B	D2549010500082		. . WATER SYSTEM-WASTE NP used on 001C, 001J, 001N SEE 25-41-51-230 FOR DET		001
-190C	D2549010505682		. . WATER SYSTEM-WASTE NP used on 001H, 001M, 001S SEE 25-41-51-230 FOR DET		001
-190D	D2549010506882		. . WATER SYSTEM-WASTE NP used on 001G SEE 25-41-51-23C FOR DET		001
-190E	D2549030500282		. . WATER SYSTEM-WASTE NP POST VSB A2-254-25-059 used on 001P, 001Q SEE 25-41-51-230 FOR DET		001
200A	D2549030500483		. . ELECTRICAL SYSTEM NP used on 001A, 001B, 001D, 001F, 001G, 001H, 001K, 001L, 001M, 001P, 001Q, 001R, 001S SEE 25-41-51-260 FOR DET		001
-200B	D2549020503283		. . ELECTRICAL SYSTEM NP used on 001C, 001J, 001N SEE 25-41-51-26A FOR DET		001

- ITEM NOT ILLUSTRATED

FIG. ITEM	PART NUMBER	AIRLINE STOCK NUMBER	NOMENCLATURE 1234567	EFF CODE	UNITS PER ASSY
-200C	D2549010503483		. . ELECTRICAL SYSTEM NP used on 001E SEE 25-41-51-260 FOR DET		001

- ITEM NOT ILLUSTRATED

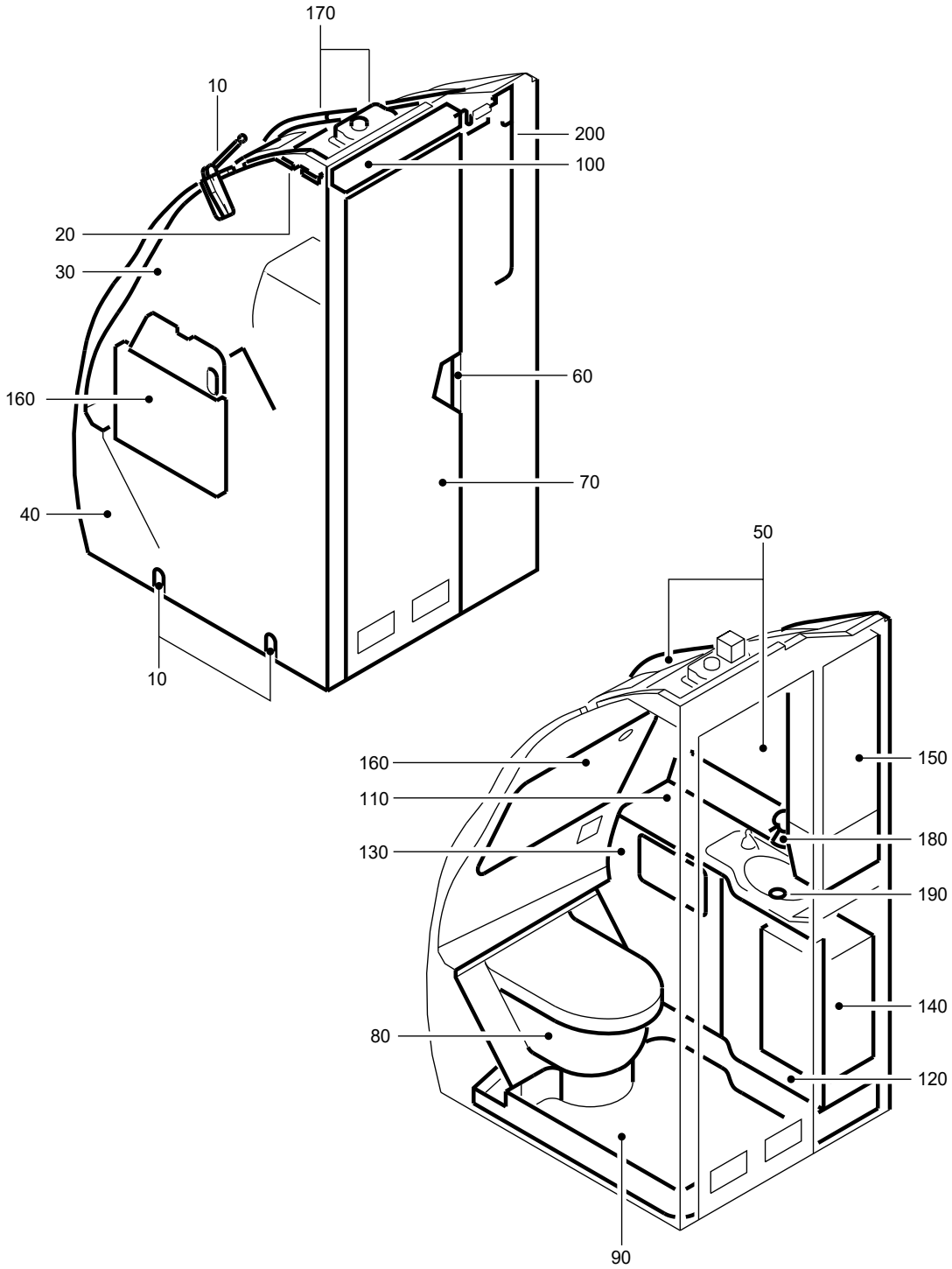

F_PL_254151_01_G_01_01

LAVATORY A ASSY
Figure 01G/EN254151SHEET01G01

FIG. ITEM	PART NUMBER	AIRLINE STOCK NUMBER	NOMENCLATURE 1234567	EFF CODE	UNITS PER ASSY
01G					
-001A	D2549010508000		. LAVATORY A ASSY SEE SIL 25-117 FOR DET		RF
-001B	D2549020602600		. LAVATORY A ASSY SEE SIL 25-117 FOR DET		RF
-001C	D2549020602800		. LAVATORY A ASSY PRE VSB A2-254-25-046 SEE SIL 25-117 FOR DET		RF
-001D	D2549020603000		. LAVATORY A ASSY SEE SIL 25-117 FOR DET		RF
-001E	D2549020603400		. LAVATORY A ASSY SEE SIL 25-117 FOR DET		RF
-001F	D2549010508200		. LAVATORY A ASSY PRE VSB A2-254-25-080 SEE SIL 25-117 FOR DET		RF
-001G	D2549010509000		. LAVATORY A ASSY SEE SIL 25-117 FOR DET		RF
-001H	D2549020601800		. LAVATORY A ASSY SEE SIL 25-117 FOR DET		RF
-001J	D2549030503200		. LAVATORY A ASSY SEE SIL 25-117 FOR DET		RF
-001K	D2549010507800		. LAVATORY A ASSY SEE SIL 25-117 FOR DET		RF
-001L	D2549010508800		. LAVATORY A ASSY SEE SIL 25-117 FOR DET		RF
-001M	D2549010508400		. LAVATORY A ASSY SEE SIL 25-117 FOR DET		RF
-001N	D2549020603800		. LAVATORY A ASSY SEE SIL 25-117 FOR DET		RF

- ITEM NOT ILLUSTRATED

FIG. ITEM	PART NUMBER	AIRLINE STOCK NUMBER	NOMENCLATURE 1234567	EFF CODE	UNITS PER ASSY
-001P	D2549010508400		. LAVATORY A ASSY		RF
-001Q	D2549010508000		. LAVATORY A ASSY		RF
-001R	D2547161903000		. KIT-LAVATORY,E POST SB 25-1742		RF
-001S	R225401145-000		. LAVATORY A ASSY POST VSB A2-254-25-080 SEE SIL 25-117 FOR DET		RF
-001T	R225401134-000		. LAVATORY A ASSY POST VSB A2-254-25-046		RF
010A	D2549010500061		. . ATTACHMENT-LAVATORY NP used on 001A, 001K, 001R SEE 25-41-51-020 FOR DET		001
-010B	D2549020602661		. . ATTACHMENT-LAVATORY NP used on 001E, 001F, 001G, 001H, 001L, 001M, 001N, 001S SEE 25-41-51-020 FOR DET		001
-010C	D2549020602861		. . ATTACHMENT-LAVATORY NP used on 001C, 001T SEE 25-41-51-020 FOR DET		001
-010D	D2549020705861		. . ATTACHMENT-LAVATORY NP POST SB 25-1312 used on 001B, 001D, 001J SEE 25-41-51-02D FOR DET		001
-010E	D2549010508061		. . ATTACHMENT-LAVATORY NP used on 001Q SEE 25-41-51-020 FOR DET		001
-010F	D2549010508461		. . ATTACHMENT-LAVATORY NP used on 001P SEE 25-41-51-020 FOR DET		001

- ITEM NOT ILLUSTRATED

FIG. ITEM	PART NUMBER	AIRLINE STOCK NUMBER	NOMENCLATURE 1234567	EFF CODE	UNITS PER ASSY
020A	D2549010500063		. . PANEL-CEILING NP used on 001A, 001J, 001K, 001Q, 001R SEE 25-41-51-040 FOR DET		001
-020B	D2549020602663		. . PANEL-CEILING NP used on 001B, 001D, 001E, 001F, 001G, 001H, 001L, 001M, 001N, 001P, 001S SEE 25-41-51-040 FOR DET		001
-020C	D2549020602863		. . PANEL-CEILING NP used on 001C, 001T SEE 25-41-51-040 FOR DET		001
030A	D2549010508064		. . WALL-REAR NP used on 001A SEE 25-41-51-05A FOR DET		001
-030B	D2549020602664		. . WALL-REAR NP used on 001B, 001F, 001H, 001N, 001S SEE 25-41-51-050 FOR DET		001
-030C	D2549020602864		. . WALL-REAR NP used on 001C, 001T SEE 25-41-51-050 FOR DET		001
-030D	D2549010502464		. . WALL-REAR NP used on 001D SEE 25-41-51-05A FOR DET		001
-030E	D2549010500064		. . WALL-REAR NP used on 001E, 001K, 001L, 001M SEE 25-41-51-050 FOR DET		001
-030F	D2549010501064		. . WALL-REAR NP used on 001J SEE 25-41-51-05A FOR DET		001

- ITEM NOT ILLUSTRATED

FIG. ITEM	PART NUMBER	AIRLINE STOCK NUMBER	NOMENCLATURE 1234567		EFF CODE	UNITS PER ASSY
-030G	D2549010509064		. . WALL-REAR used on 001G SEE 25-41-51-050 FOR DET	NP		001
-030H	D2549010508164		. . WALL-REAR used on 001P, 001Q SEE 25-41-51-05A FOR DET	NP		001
-030J	D2547161903064		. . WALL-REAR POST SB 25-1742 used on 001R SEE 25-41-51-05C FOR DET	NP		001
040A	D2549010508065		. . WALL-SIDE used on 001A SEE 25-41-51-06D FOR DET	NP		001
-040B	D2549020602665		. . WALL-SIDE used on 001B SEE 25-41-51-06D FOR DET	NP		001
-040C	D2549020608265		. . WALL-SIDE POST SB 25-1214 used on 001C, 001T SEE 25-41-51-06H FOR DET	NP		001
-040D	D2549020603065		. . WALL-SIDE used on 001D SEE 25-41-51-06C FOR DET	NP		001
-040E	D2549020603465		. . WALL-SIDE used on 001E SEE 25-41-51-06D FOR DET	NP		001
-040F	D2549010508265		. . WALL-SIDE PRE VSB A2-254-25-080 used on 001F SEE 25-41-51-06D FOR DET	NP		001

- ITEM NOT ILLUSTRATED

FIG. ITEM	PART NUMBER	AIRLINE STOCK NUMBER	NOMENCLATURE 1234567	EFF CODE	UNITS PER ASSY
-040G	D2549010509065		. . WALL-SIDE NP used on 001G SEE 25-41-51-06E FOR DET		001
-040H	D2549020601865		. . WALL-SIDE NP used on 001H SEE 25-41-51-06E FOR DET		001
-040J	D2549030500265		. . WALL-SIDE NP used on 001J SEE 25-41-51-48E FOR DET		001
-040K	D2549010505665		. . WALL-SIDE NP used on 001K SEE 25-41-51-06C FOR DET		001
-040L	D2549010508865		. . WALL-SIDE NP used on 001L SEE 25-41-51-06C FOR DET		001
-040M	D2549020603865		. . WALL-SIDE NP used on 001N SEE 25-41-51-06E FOR DET		001
-040N	D2549010508465		. . WALL-SIDE NP used on 001M SEE 25-41-51-06E FOR DET		001
-040P	D2549010508565		. . WALL-SIDE NP used on 001P SEE 25-41-51-06E FOR DET		001
-040Q	D2549010508165		. . WALL-SIDE NP used on 001Q SEE 25-41-51-06E FOR DET		001
-040R	D2547161903065		. . WALL-SIDE NP POST SB 25-1742 used on 001R SEE 25-41-51-48D FOR DET		001

- ITEM NOT ILLUSTRATED

FIG. ITEM	PART NUMBER	AIRLINE STOCK NUMBER	NOMENCLATURE 1234567	EFF CODE	UNITS PER ASSY
-040S	R22540114500065		. . WALL-SIDE NP POST VSB A2-254-25-080 used on 001S SEE 25-41-51-06D FOR DET		001
050A	D2549010508066		. . HOUSING NP used on 001A, 001Q SEE 25-41-51-07C FOR DET		001
-050B	D2549020602666		. . HOUSING NP used on 001B SEE 25-41-51-07C FOR DET		001
-050C	D2549020602866		. . HOUSING NP used on 001C, 001T SEE 25-41-51-07C FOR DET		001
-050D	D2549030503466		. . HOUSING NP used on 001D SEE 25-41-51-07Y FOR DET		001
-050E	D2549020603466		. . HOUSING NP used on 001E SEE 25-41-51-07B FOR DET		001
-050F	D2549010504466		. . HOUSING NP used on 001F, 001S SEE 25-41-51-07Y FOR DET		001
-050G	D2549010509066		. . HOUSING NP used on 001G SEE 25-41-51-07B FOR DET		001
-050H	D2549020601866		. . HOUSING NP used on 001H, 001L SEE 25-41-51-07B FOR DET		001
-050J	D2549010501066		. . HOUSING NP used on 001J SEE 25-41-51-07Y FOR DET		001

- ITEM NOT ILLUSTRATED

FIG. ITEM	PART NUMBER	AIRLINE STOCK NUMBER	NOMENCLATURE 1234567		EFF CODE	UNITS PER ASSY
-050K	D2549010505666		. . HOUSING used on 001K SEE 25-41-51-07A FOR DET	NP		001
-050L	D2549020603866		. . HOUSING used on 001N SEE 25-41-51-07B FOR DET	NP		001
-050M	D2549010508466		. . HOUSING used on 001M, 001P SEE 25-41-51-07B FOR DET	NP		001
-050N	D2547161903066		. . HOUSING POST SB 25-1742 used on 001R SEE 25-41-51-07S FOR DET	NP		001
060A	D2549010500069		. . DOOR INSTL used on 001A, 001B, 001C, 001D, 001E, 001F, 001H, 001J, 001K, 001L, 001N, 001Q, 001R, 001S, 001T SEE 25-41-51-100 FOR DET	NP		001
-060B	D2549020401269		. . DOOR INSTL used on 001G, 001M, 001P SEE 25-41-51-10A FOR DET	NP		001
070A	A225400270-910		. . DOOR ASSY-SINGLE used on 001A, 001Q SEE 25-41-51-11A FOR DET			001
-070B	A225400270-534		. . DOOR ASSY-SINGLE used on 001B SEE 25-41-51-11A FOR DET			001
-070C	A225400270-536		. . DOOR ASSY-SINGLE used on 001C, 001T SEE 25-41-51-11A FOR DET			001

- ITEM NOT ILLUSTRATED

FIG. ITEM	PART NUMBER	AIRLINE STOCK NUMBER	NOMENCLATURE 1234567		EFF CODE	UNITS PER ASSY
-070D	A225400270-512		. . DOOR ASSY-SINGLE used on 001D, 001F, 001J, 001S SEE 25-41-51-110 FOR DET			001
-070E	A225400270-906		. . DOOR ASSY-SINGLE used on 001E SEE 25-41-51-11A FOR DET			001
-070F	A2254002708506		. . DOOR ASSY-SINGLE used on 001G SEE 25-41-51-11Q FOR DET			001
-070G	A225400270-502		. . DOOR ASSY-SINGLE used on 001H, 001K, 001L, 001R SEE 25-41-51-110 FOR DET			001
-070H	A225400270-514		. . DOOR ASSY-SINGLE used on 001N SEE 25-41-51-110 FOR DET			001
-070J	A2254002708502		. . DOOR ASSY-SINGLE used on 001H, 001K, 001L, 001M, 001P, 001R SEE 25-41-51-11Q FOR DET			001
080A	D2549010508071		. . TOILET UNIT AND TOILET SHROUD used on 001A, 001Q SEE 25-41-51-12A FOR DET	NP		001
-080B	D2549020602671		. . TOILET UNIT AND TOILET SHROUD used on 001B SEE 25-41-51-12B FOR DET	NP		001
-080C	D2549030502471		. . TOILET UNIT AND TOILET SHROUD used on 001C, 001T SEE 25-41-51-12A FOR DET	NP		001

- ITEM NOT ILLUSTRATED

FIG. ITEM	PART NUMBER	AIRLINE STOCK NUMBER	NOMENCLATURE 1234567		EFF CODE	UNITS PER ASSY
-080D	D2549010507471		. . TOILET UNIT AND TOILET SHROUD used on 001D, 001F, 001H, 001K, 001L, 001M, 001P, 001S SEE 25-41-51-12A FOR DET	NP		001
-080E	D2549020601471		. . TOILET UNIT AND TOILET SHROUD used on 001E SEE 25-41-51-12A FOR DET	NP		001
-080F	D2549010507071		. . TOILET UNIT AND TOILET SHROUD used on 001G, 001J SEE 25-41-51-12A FOR DET	NP		001
-080G	D2549020603871		. . TOILET UNIT AND TOILET SHROUD used on 001N SEE 25-41-51-12B FOR DET	NP		001
-080H	D2547161903071		. . TOILET UNIT-COVER AND SEAT POST SB 25-1742 used on 001R SEE 25-41-51-12H FOR DET	NP		001
090A	D2549010508072		. . PAN-FLOOR used on 001A, 001Q SEE 25-41-51-13A FOR DET	NP		001
-090B	D2549010500672		. . PAN-FLOOR used on 001B, 001N SEE 25-41-51-130 FOR DET	NP		001
-090C	D2549020602872		. . PAN-FLOOR used on 001C, 001T SEE 25-41-51-13A FOR DET	NP		001

- ITEM NOT ILLUSTRATED

FIG. ITEM	PART NUMBER	AIRLINE STOCK NUMBER	NOMENCLATURE 1234567	EFF CODE	UNITS PER ASSY
-090D	D2549010501072		. . PAN-FLOOR NP used on 001D SEE 25-41-51-130 FOR DET		001
-090E	D2549020601472		. . PAN-FLOOR NP used on 001E SEE 25-41-51-130 FOR DET		001
-090F	D2549010505872		. . PAN-FLOOR NP used on 001F, 001L, 001S SEE 25-41-51-130 FOR DET		001
-090G	D2549020500272		. . PAN-FLOOR NP used on 001H, 001K SEE 25-41-51-130 FOR DET		001
-090H	D2549010502072		. . PAN-FLOOR NP used on 001J SEE 25-41-51-130 FOR DET		001
-090J	D2549020603272		. . PAN-FLOOR NP used on 001G, 001M, 001P SEE 25-41-51-13U FOR DET		001
-090K	D2547161903072		. . PAN-FLOOR NP POST SB 25-1742 used on 001R SEE 25-41-51-130 FOR DET		001
100A	D2549010500073		. . LIGHT-DOOR NP used on 001A, 001J, 001K, 001Q, 001R SEE 25-41-51-140 FOR DET		001
-100B	D2549020602673		. . LIGHT-DOOR NP used on 001B, 001D, 001E, 001F, 001G, 001H, 001L, 001M, 001N, 001P, 001S SEE 25-41-51-140 FOR DET		001

- ITEM NOT ILLUSTRATED

FIG. ITEM	PART NUMBER	AIRLINE STOCK NUMBER	NOMENCLATURE 1234567		EFF CODE	UNITS PER ASSY
-100C	D2549020602873		. . LIGHT-DOOR used on 001C, 001T SEE 25-41-51-140 FOR DET	NP		001
110A	D2549010508074		. . WASHBASIN UNIT used on 001A, 001Q SEE 25-41-51-150 FOR DET	NP		001
-110B	D2549020500274		. . WASHBASIN UNIT used on 001B, 001E, 001F, 001G, 001H, 001J, 001L, 001M, 001N, 001P, 001S SEE 25-41-51-150 FOR DET	NP		001
-110C	D2549020602874		. . WASHBASIN UNIT used on 001C, 001T SEE 25-41-51-150 FOR DET	NP		001
-110D	D2549010502474		. . WASHBASIN UNIT used on 001D SEE 25-41-51-150 FOR DET	NP		001
-110E	D2549010505674		. . WASHBASIN UNIT used on 001K SEE 25-41-51-150 FOR DET	NP		001
-110F	D2547161903074		. . WASHBASIN UNIT POST SB 25-1742 used on 001R SEE 25-41-51-15L FOR DET	NP		001
120A	D2549010508075		. . DOOR ASSY-WASHBASIN UNIT used on 001A, 001Q SEE 25-41-51-160 FOR DET	NP		001
-120B	D2549020602675		. . DOOR ASSY-WASHBASIN UNIT used on 001B SEE 25-41-51-16A FOR DET	NP		001

- ITEM NOT ILLUSTRATED

FIG. ITEM	PART NUMBER	AIRLINE STOCK NUMBER	NOMENCLATURE 1234567	EFF CODE	UNITS PER ASSY
-120C	D2549020602875		. . DOOR ASSY-WASHBASIN UNIT NP used on 001C, 001T SEE 25-41-51-160 FOR DET		001
-120D	D2549020603075		. . DOOR ASSY-WASHBASIN UNIT NP used on 001D, 001F, 001H, 001L, 001M, 001P, 001S SEE 25-41-51-16A FOR DET		001
-120E	D2549020603475		. . DOOR ASSY-WASHBASIN UNIT NP used on 001E SEE 25-41-51-16A FOR DET		001
-120F	D2549010509075		. . DOOR ASSY-WASHBASIN UNIT NP used on 001G SEE 25-41-51-16A FOR DET		001
-120G	D2549010500475		. . DOOR ASSY-WASHBASIN UNIT NP used on 001J SEE 25-41-51-160 FOR DET		001
-120H	D2549010502275		. . DOOR ASSY-WASHBASIN UNIT NP used on 001K, 001R SEE 25-41-51-160 FOR DET		001
-120J	D2549020603875		. . DOOR ASSY-WASHBASIN UNIT NP used on 001N SEE 25-41-51-16A FOR DET		001
130A	D2549010508076		. . PANEL ASSY-WASHBASIN UNIT NP used on 001A, 001Q SEE 25-41-51-17B FOR DET		001

- ITEM NOT ILLUSTRATED

FIG. ITEM	PART NUMBER	AIRLINE STOCK NUMBER	NOMENCLATURE 1234567	EFF CODE	UNITS PER ASSY
-130B	D2549020602676		. . PANEL ASSY-WASHBASIN UNIT NP used on 001B SEE 25-41-51-17B FOR DET		001
-130C	D2549020602876		. . PANEL ASSY-WASHBASIN UNIT NP used on 001C, 001T SEE 25-41-51-17B FOR DET		001
-130D	D2549020603076		. . PANEL ASSY-WASHBASIN UNIT NP used on 001D, 001F, 001H, 001L, 001M, 001P, 001S SEE 25-41-51-17A FOR DET		001
-130E	D2549020603476		. . PANEL ASSY-WASHBASIN UNIT NP used on 001E SEE 25-41-51-17B FOR DET		001
-130F	D2549010509076		. . PANEL ASSY-WASHBASIN UNIT NP used on 001G SEE 25-41-51-17A FOR DET		001
-130G	D2549010500476		. . PANEL ASSY-WASHBASIN UNIT NP used on 001J SEE 25-41-51-17A FOR DET		001
-130H	D2549010502276		. . PANEL ASSY-WASHBASIN UNIT NP used on 001K SEE 25-41-51-17A FOR DET		001
-130J	D2549020603876		. . PANEL ASSY-WASHBASIN UNIT NP used on 001N SEE 25-41-51-17B FOR DET		001

- ITEM NOT ILLUSTRATED

FIG. ITEM	PART NUMBER	AIRLINE STOCK NUMBER	NOMENCLATURE 1234567	EFF CODE	UNITS PER ASSY
-130K	D2547161903076		. . PANEL ASSY-WASHBASIN UNIT NP POST SB 25-1742 used on 001R SEE 25-41-51-17F FOR DET		001
140A	D2549010500077		. . BIN-WASTE,CHUTE-WASTE AND EXTINGUISHER-FIRE NP used on 001A, 001J, 001Q SEE 25-41-51-180 FOR DET		001
-140B	D2549020602677		. . BIN-WASTE,CHUTE-WASTE AND EXTINGUISHER-FIRE NP used on 001B, 001C, 001E, 001F, 001G, 001H, 001L, 001M, 001N, 001P, 001S, 001T SEE 25-41-51-180 FOR DET		001
-140C	D2549020600477		. . BIN-WASTE,CHUTE-WASTE AND EXTINGUISHER-FIRE NP used on 001D, 001K SEE 25-41-51-180 FOR DET		001
-140D	D2547161903077		. . CONSOLE-WASHBASIN UNIT NP POST SB 25-1742 used on 001R SEE 25-41-51-180 FOR DET		001
150A	D2549010504278		. . CABINET-SERVICE NP used on 001M, 001P SEE 25-41-51-19B FOR DET		001
-150B	D2549030503478		. . CABINET-SERVICE NP PRE VSB A2-254-25-080 used on 001B, 001D, 001E, 001F, 001H, 001L SEE 25-41-51-19B FOR DET		001
-150C	D2549020602878		. . CABINET-SERVICE NP used on 001C, 001T SEE 25-41-51-19A FOR DET		001

- ITEM NOT ILLUSTRATED

FIG. ITEM	PART NUMBER	AIRLINE STOCK NUMBER	NOMENCLATURE 1234567	EFF CODE	UNITS PER ASSY
-150D	D2549020601078		. . CABINET-SERVICE NP used on 001A, 001G, 001N, 001Q SEE 25-41-51-19B FOR DET		001
-150E	D2549010501078		. . CABINET-SERVICE NP used on 001J SEE 25-41-51-19C FOR DET		001
-150F	D2549010505678		. . CABINET-SERVICE NP used on 001K, 001R SEE 25-41-51-19A FOR DET		001
-150G	R22540114500078		. . CABINET-SERVICE NP POST VSB A2-254-25-080 used on 001S SEE 25-41-51-19B FOR DET		001
160A	D2549010500479		. . TABLE-NURSING NP used on 001A, 001B, 001E, 001F, 001H, 001K, 001L, 001M, 001N, 001P, 001Q, 001S SEE 25-41-51-200 FOR DET		001
-160B	D2549020613679		. . TABLE-NURSING NP used on 001C, 001T SEE 25-41-51-20A FOR DET		001
-160C	D2549010512679		. . TABLE-NURSING NP used on 001D, 001G, 001J SEE 25-41-51-20A FOR DET		001
-160D	D2549010510679		. . TABLE-NURSING NP POST SB 25-1742 used on 001R SEE 25-41-51-20A FOR DET		001

- ITEM NOT ILLUSTRATED

FIG. ITEM	PART NUMBER	AIRLINE STOCK NUMBER	NOMENCLATURE 1234567	EFF CODE	UNITS PER ASSY
170A	D2549010500080		. . VENTILATION SYSTEM NP used on 001A, 001B, 001D, 001E, 001F, 001G, 001H, 001J, 001K, 001L, 001M, 001N, 001P, 001Q, 001R, 001S SEE 25-41-51-210 FOR DET		001
-170B	D2549020500080		. . VENTILATION SYSTEM NP used on 001C, 001T SEE 25-41-51-210 FOR DET		001
180A	D2549010508081		. . WATER SYSTEM-POTABLE NP used on 001A, 001Q SEE 25-41-51-22C FOR DET		001
-180B	D2549010501881		. . WATER SYSTEM-POTABLE NP used on 001B, 001D, 001F, 001G, 001H, 001J, 001K, 001L, 001M, 001N, 001P, 001S SEE 25-41-51-220 FOR DET		001
-180C	D2549030500881		. . WATER SYSTEM-POTABLE NP used on 001C, 001E, 001T SEE 25-41-51-220 FOR DET		001
-180D	D2547161903081		. . WATER SYSTEM-POTABLE NP POST SB 25-1742 used on 001R SEE 25-41-51-22J FOR DET		001
190A	D2549010508082		. . WATER SYSTEM-WASTE NP used on 001A, 001Q SEE 25-41-51-23A FOR DET		001
-190B	D2549030500282		. . WATER SYSTEM-WASTE NP used on 001B, 001F, 001G, 001H, 001J, 001L, 001M, 001N, 001P, 001S SEE 25-41-51-230 FOR DET		001

- ITEM NOT ILLUSTRATED

FIG. ITEM	PART NUMBER	AIRLINE STOCK NUMBER	NOMENCLATURE 1234567		EFF CODE	UNITS PER ASSY
-190C	D2549020602882		. . WATER SYSTEM-WASTE used on 001C, 001T SEE 25-41-51-230 FOR DET	NP		001
-190D	D2549020600482		. . WATER SYSTEM-WASTE used on 001D, 001K, 001R SEE 25-41-51-23C FOR DET	NP		001
-190E	D2549030500882		. . WATER SYSTEM-WASTE used on 001E SEE 25-41-51-230 FOR DET	NP		001
200A	D2549010508083		. . ELECTRICAL SYSTEM used on 001A, 001Q SEE 25-41-51-26A FOR DET	NP		001
-200B	D2549030500483		. . ELECTRICAL SYSTEM used on 001B, 001D, 001E, 001H, 001J, 001K, 001L, 001M, 001N, 001P, 001R SEE 25-41-51-260 FOR DET	NP		001
-200C	D2549010508283		. . ELECTRICAL SYSTEM used on 001F, 001S SEE 25-41-51-26A FOR DET	NP		001
-200D	D2549020602883		. . ELECTRICAL SYSTEM used on 001C, 001G, 001T SEE 25-41-51-26B FOR DET	NP		001

- ITEM NOT ILLUSTRATED

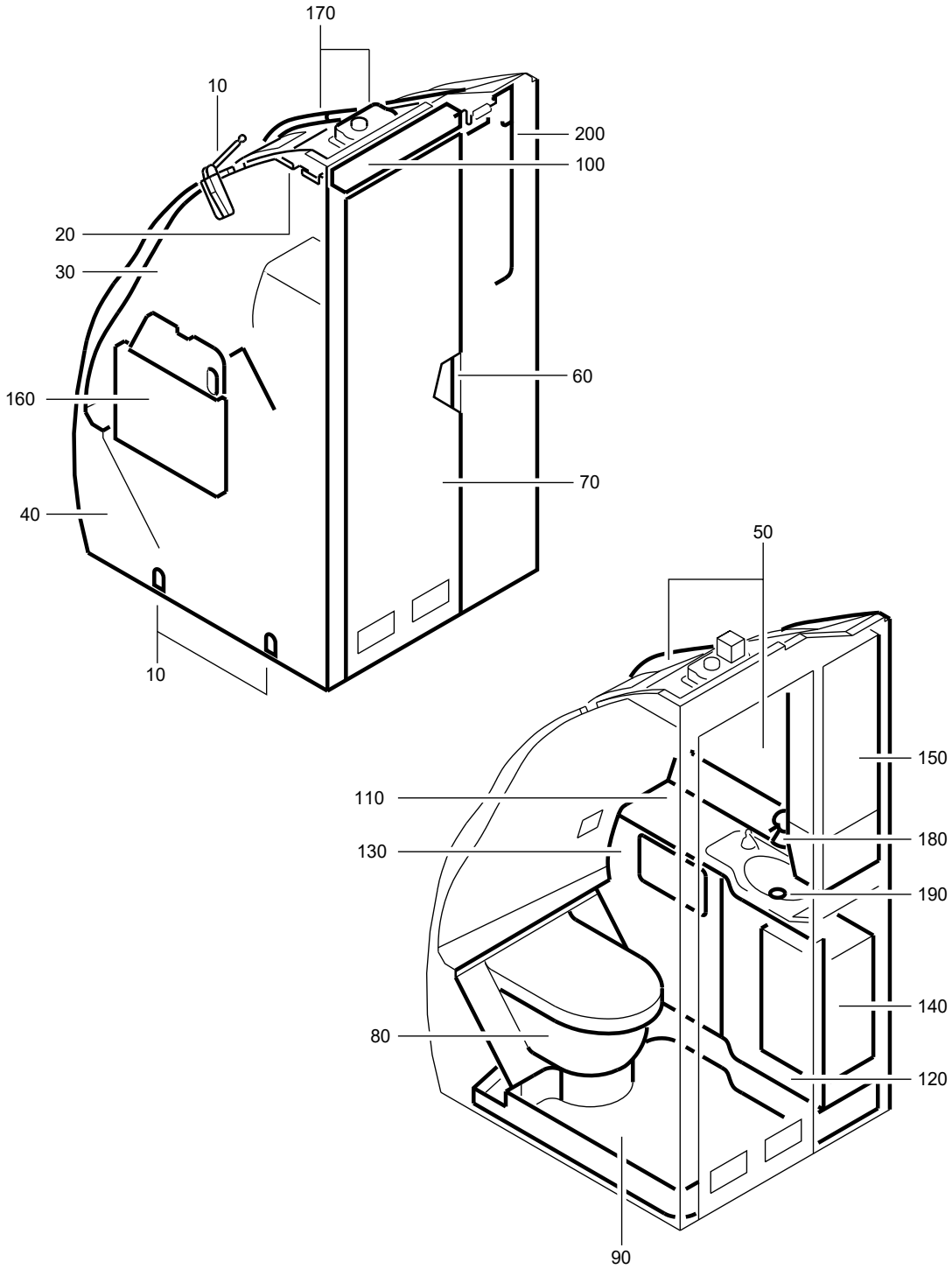

F_PL_254151_01_H_01_00

LAVATORY A ASSY
Figure 01H/EN254151SHEET01H01

FIG. ITEM	PART NUMBER	AIRLINE STOCK NUMBER	NOMENCLATURE 1234567	EFF CODE	UNITS PER ASSY
01H					
-001A	D2549020603200		. LAVATORY A ASSY VSB A2-254-25-013 VSB A2-254-25-032 SEE SIL 25-117 FOR DET		RF
-001B	D2549020603600		. LAVATORY A ASSY SEE SIL 25-117 FOR DET		RF
-001C	D2549030502200		. LAVATORY A ASSY SEE SIL 25-117 FOR DET		RF
-001D	D2549010509200		. LAVATORY A ASSY SEE SIL 25-117 FOR DET		RF
-001E	D2549010508600		. LAVATORY A ASSY SEE SIL 25-117 FOR DET		RF
-001F	D2549030502000		. LAVATORY A ASSY SEE SIL 25-117 FOR DET		RF
-001G	D2549030503600		. LAVATORY A ASSY SEE SIL 25-117 FOR DET		RF
-001H	D2549020606400		. LAVATORY A ASSY SEE SIL 25-117 FOR DET		RF
-001J	D2549010511200		. LAVATORY A ASSY PRE VSB A2-254-25-078 SEE SIL 25-117 FOR DET		RF
-001K	D2549020607200		. LAVATORY A ASSY SEE SIL 25-117 FOR DET		RF
-001L	D2549020606600		. LAVATORY A ASSY SEE SIL 25-117 FOR DET		RF
-001M	D2549020604000		. LAVATORY A ASSY SEE SIL 25-117 FOR DET		RF

- ITEM NOT ILLUSTRATED

FIG. ITEM	PART NUMBER	AIRLINE STOCK NUMBER	NOMENCLATURE 1234567	EFF CODE	UNITS PER ASSY
-001N	D2549020601400		. LAVATORY A ASSY POST SB 38-1055 SEE SIL 25-117 FOR DET		RF
-001P	D2549030502000		. LAVATORY A ASSY SEE SIL 25-117 FOR DET		RF
-001Q	D2549020603600		. LAVATORY A ASSY SEE SIL 25-117 FOR DET		RF
-001R	D2549020604000		. LAVATORY A ASSY SEE SIL 25-117 FOR DET		RF
-001S	R225401107-002		. LAVATORY A ASSY POST VSB A2-254-25-078		RF
010A	D2549020602661		. . ATTACHMENT-LAVATORY NP used on 001D, 001E, 001G, 001H, 001L SEE 25-41-51-020 FOR DET		001
-010B	D2549010500061		. . ATTACHMENT-LAVATORY NP used on 001F, 001N SEE 25-41-51-020 FOR DET		001
-010C	D2549010610061		. . ATTACHMENT-LAVATORY NP POST SB 25-1289 POST SB 25-1312 used on 001A SEE 25-41-51-02D FOR DET		001
-010D	D2549020610061		. . ATTACHMENT-LAVATORY NP used on 001B, 001C, 001J, 001K, 001M, 001S SEE 25-41-51-02D FOR DET		001
-010E	D2549010500061		. . ATTACHMENT-LAVATORY NP used on 001P SEE 25-41-51-020 FOR DET		001

- ITEM NOT ILLUSTRATED

FIG. ITEM	PART NUMBER	AIRLINE STOCK NUMBER	NOMENCLATURE 1234567		EFF CODE	UNITS PER ASSY
-010F	D2547160007461		. . ATTACHMENT-LAVTORYY POST SB 25-1640 used on 001Q, 001R SEE 25-41-51-02D FOR DET	NP		001
020A	D2549020602663		. . PANEL-CEILING used on 001A, 001B, 001D, 001E, 001G, 001H, 001J, 001K, 001L, 001M, 001S SEE 25-41-51-040 FOR DET	NP		001
-020B	D2549010500063		. . PANEL-CEILING used on 001C, 001F, 001N, 001P SEE 25-41-51-040 FOR DET	NP		001
-020C	D2549030401463		. . PANEL-CEILING used on 001Q, 001R SEE 25-41-51-040 FOR DET	NP		001
030A	D2549020602664		. . WALL-REAR used on 001D, 001E, 001H, 001K, 001L SEE 25-41-51-050 FOR DET	NP		001
-030B	D2549010500064		. . WALL-REAR used on 001B, 001G, 001M, 001N, 001Q, 001R SEE 25-41-51-050 FOR DET	NP		001
-030C	D2549020600064		. . WALL-REAR used on 001F SEE 25-41-51-050 FOR DET	NP		001
-030D	D2549010501064		. . WALL-REAR used on 001C, 001J, 001S SEE 25-41-51-05A FOR DET	NP		001
-030E	D2549020611664		. . WALL-REAR POST SB 25-1289 used on 001A SEE 25-41-51-05A FOR DET	NP		001

- ITEM NOT ILLUSTRATED

FIG. ITEM	PART NUMBER	AIRLINE STOCK NUMBER	NOMENCLATURE 1234567	EFF CODE	UNITS PER ASSY
-030F	D2549020600064		. . WALL-REAR NP used on 001P SEE 25-41-51-050 FOR DET		001
040A	D2549020606665		. . WALL-SIDE NP used on 001L SEE 25-41-51-06E FOR DET		001
-040B	D2549020603665		. . WALL-SIDE NP used on 001B SEE 25-41-51-06E FOR DET		001
-040C	D2549010502065		. . WALL-SIDE NP used on 001C SEE 25-41-51-48E FOR DET		001
-040D	D2549010509265		. . WALL-SIDE NP used on 001D SEE 25-41-51-06E FOR DET		001
-040E	D2549010508665		. . WALL-SIDE NP used on 001E SEE 25-41-51-06E FOR DET		001
-040F	D2549030502065		. . WALL-SIDE NP used on 001F SEE 25-41-51-06B FOR DET		001
-040G	D2549030503665		. . WALL-SIDE NP used on 001G SEE 25-41-51-06E FOR DET		001
-040H	D2549020606465		. . WALL-SIDE NP used on 001H SEE 25-41-51-06T FOR DET		001
-040J	D2549020607265		. . WALL-SIDE NP used on 001K SEE 25-41-51-06F FOR DET		001

- ITEM NOT ILLUSTRATED

FIG. ITEM	PART NUMBER	AIRLINE STOCK NUMBER	NOMENCLATURE 1234567		EFF CODE	UNITS PER ASSY
-040K	D2549020601465		. . WALL-SIDE used on 001N SEE 25-41-51-06A FOR DET	NP		001
-040L	D2549020604065		. . WALL-SIDE used on 001M SEE 25-41-51-06B FOR DET	NP		001
-040M	D2549020603265		. . WALL-SIDE POST SB 25-1289 used on 001A SEE 25-41-51-48E FOR DET	NP		001
-040N	D2549010511265		. . WALL-SIDE used on 001J, 001S SEE 25-41-51-48E FOR DET	NP		001
-040P	D2549030502065		. . WALL-SIDE used on 001P SEE 25-41-51-06B FOR DET	NP		001
-040Q	F2547160007465		. . WALL-SIDE used on 001Q, 001R SEE 25-41-51-06E FOR DET	NP		001
050A	D2549020603266		. . HOUSING PRE VSB A2-254-25-032 used on 001A SEE 25-41-51-49C FOR DET	NP		001
-050B	D2549020603666		. . HOUSING used on 001B, 001M SEE 25-41-51-07C FOR DET	NP		001
-050C	D2549010501066		. . HOUSING used on 001C SEE 25-41-51-07Y FOR DET	NP		001
-050D	D2549010509266		. . HOUSING used on 001D SEE 25-41-51-07C FOR DET	NP		001

- ITEM NOT ILLUSTRATED

FIG. ITEM	PART NUMBER	AIRLINE STOCK NUMBER	NOMENCLATURE 1234567	EFF CODE	UNITS PER ASSY
-050E	D2549010504466		. . HOUSING NP used on 001E, 001G, 001H SEE 25-41-51-07Y FOR DET		001
-050F	D2549030500866		. . HOUSING NP used on 001F, 001P SEE 25-41-51-07A FOR DET		001
-050G	D2549020503666		. . HOUSING NP used on 001N SEE 25-41-51-07Y FOR DET		001
-050H	D2549020606666		. . HOUSING NP used on 001L SEE 25-41-51-07B FOR DET		001
-050J	D2549020602666		. . HOUSING NP used on 001K SEE 25-41-51-07C FOR DET		001
-050K	D2549010501066		. . HOUSING NP POST SB 25-1314 used on 001J, 001S SEE 25-41-51-07Y FOR DET		001
-050L	D2547160007466		. . HOUSING NP POST SB 25-1640 used on 001Q, 001R SEE 25-41-51-07C FOR DET		001
-050M	D2549020603266		. . HOUSING NP POST VSB A2-254-25-032 used on 001A SEE 25-41-51-49C FOR DET		001
060A	D2549010500069		. . DOOR INSTL NP used on 001B, 001C, 001D, 001E, 001F, 001G, 001H, 001K, 001L, 001M, 001N, 001P, 001Q, 001R SEE 25-41-51-100 FOR DET		001

- ITEM NOT ILLUSTRATED

FIG. ITEM	PART NUMBER	AIRLINE STOCK NUMBER	NOMENCLATURE 1234567	EFF CODE	UNITS PER ASSY
-060B	D2549020401269		. . DOOR INSTL NP used on 001A, 001J, 001S SEE 25-41-51-10A FOR DET		001
070A	A225400270-508		. . DOOR ASSY-SINGLE used on 001G SEE 25-41-51-110 FOR DET		001
-070B	A225400270-538		. . DOOR ASSY-SINGLE used on 001B, 001M, 001Q, 001R SEE 25-41-51-110 FOR DET		001
-070C	A225400270-512		. . DOOR ASSY-SINGLE used on 001C SEE 25-41-51-110 FOR DET		001
-070D	A225400270-502		. . DOOR ASSY-SINGLE used on 001D SEE 25-41-51-110 FOR DET		001
-070E	A225400270-906		. . DOOR ASSY-SINGLE used on 001E, 001H, 001N SEE 25-41-51-11A FOR DET		001
-070F	A225400270-900		. . DOOR ASSY-SINGLE used on 001F, 001P SEE 25-41-51-110 FOR DET		001
-070G	A225400270-540		. . DOOR ASSY-SINGLE used on 001L SEE 25-41-51-11B FOR DET		001
-070H	A225400270-534		. . DOOR ASSY-SINGLE used on 001K SEE 25-41-51-11A FOR DET		001
-070J	A2254002708508		. . DOOR ASSY-SINGLE PRE VSB A2-254-25-032 used on 001A, 001G SEE 25-41-51-11Q FOR DET		001

- ITEM NOT ILLUSTRATED

FIG. ITEM	PART NUMBER	AIRLINE STOCK NUMBER	NOMENCLATURE 1234567		EFF CODE	UNITS PER ASSY
-070K	A2254002708512		. . DOOR ASSY-SINGLE used on 001C, 001J, 001S SEE 25-41-51-110 FOR DET			001
-070L	A2254002708508		. . DOOR ASSY-SINGLE POST VSB A2-254-25-032 used on 001A SEE 25-41-51-11Q FOR DET			001
080A	D2549010507471		. . TOILET UNIT AND TOILET SHROUD used on 001A, 001B, 001D, 001F, 001G, 001L, 001M, 001P, 001Q, 001R SEE 25-41-51-12A FOR DET	NP		001
-080B	D2549010507071		. . TOILET UNIT AND TOILET SHROUD used on 001C, 001J, 001S SEE 25-41-51-12A FOR DET	NP		001
-080C	D2549020601471		. . TOILET UNIT AND TOILET SHROUD used on 001E, 001H, 001N SEE 25-41-51-12A FOR DET	NP		001
-080D	D2549020602671		. . TOILET UNIT AND TOILET SHROUD used on 001K SEE 25-41-51-12B FOR DET	NP		001
090A	D2549020603272		. . PAN-FLOOR POST SB 25-1289 used on 001A, 001J, 001S SEE 25-41-51-13U FOR DET	NP		001
-090B	D2549010500072		. . PAN-FLOOR used on 001B, 001M, 001Q, 001R SEE 25-41-51-130 FOR DET	NP		001

- ITEM NOT ILLUSTRATED

FIG. ITEM	PART NUMBER	AIRLINE STOCK NUMBER	NOMENCLATURE 1234567		EFF CODE	UNITS PER ASSY
-090C	D2549010502072		. . PAN-FLOOR used on 001C SEE 25-41-51-130 FOR DET	NP		001
-090D	D2549020601472		. . PAN-FLOOR used on 001D, 001H, 001N SEE 25-41-51-130 FOR DET	NP		001
-090E	D2549020500272		. . PAN-FLOOR used on 001E, 001F, 001L SEE 25-41-51-130 FOR DET	NP		001
-090F	D2549010500672		. . PAN-FLOOR used on 001G, 001K SEE 25-41-51-130 FOR DET	NP		001
-090H	D2549020700272		. . PAN-FLOOR POST SB 25-1289 used on 001P SEE 25-41-51-13V FOR DET	NP		001
100A	D2549020602673		. . LIGHT-DOOR used on 001A, 001B, 001D, 001E, 001G, 001H, 001J, 001K, 001L, 001M, 001S SEE 25-41-51-140 FOR DET	NP		001
-100B	D2549010500073		. . LIGHT-DOOR used on 001C, 001F, 001N, 001P SEE 25-41-51-140 FOR DET	NP		001
-100C	D2547160007473		. . LIGHT-DOOR POST SB 25-1640 used on 001Q, 001R SEE 25-41-51-14A FOR DET	NP		001
110A	D2549030502674		. . WASHBASIN UNIT PRE VSB A2-254-25-013 PRE VSB A2-254-25-032 used on 001A SEE 25-41-51-150 FOR DET	NP		001

- ITEM NOT ILLUSTRATED

FIG. ITEM	PART NUMBER	AIRLINE STOCK NUMBER	NOMENCLATURE 1234567	EFF CODE	UNITS PER ASSY
-110B	D2549020603674		. . WASHBASIN UNIT NP used on 001B, 001M, 001Q, 001R SEE 25-41-51-15B FOR DET		001
-110C	D2549020500274		. . WASHBASIN UNIT NP used on 001C, 001D, 001E, 001F, 001G, 001H, 001J, 001K, 001L, 001N, 001P, 001S SEE 25-41-51-150 FOR DET		001
-110D	D2549030502674		. . WASHBASIN UNIT NP POST VSB A2-254-25-013 used on 001A SEE 25-41-51-150 FOR DET		001
-110E	D2549030502674		. . WASHBASIN UNIT NP POST VSB A2-254-25-032 used on 001A SEE 25-41-51-150 FOR DET		001
120A	D2549020603075		. . DOOR ASSY-WASHBASIN UNIT NP PRE VSB A2-254-25-032 used on 001A, 001B, 001D, 001G, 001L, 001M, 001Q, 001R SEE 25-41-51-16A FOR DET		001
-120B	D2549010500475		. . DOOR ASSY-WASHBASIN UNIT NP used on 001C SEE 25-41-51-160 FOR DET		001
-120C	D2549020603475		. . DOOR ASSY-WASHBASIN UNIT NP used on 001E, 001H SEE 25-41-51-16A FOR DET		001
-120D	D2549010502275		. . DOOR ASSY-WASHBASIN UNIT NP used on 001F, 001P SEE 25-41-51-160 FOR DET		001

- ITEM NOT ILLUSTRATED

FIG. ITEM	PART NUMBER	AIRLINE STOCK NUMBER	NOMENCLATURE 1234567		EFF CODE	UNITS PER ASSY
-120E	D2549010509075		. . DOOR ASSY-WASHBASIN UNIT used on 001J, 001S SEE 25-41-51-16A FOR DET	NP		001
-120F	D2549020602675		. . DOOR ASSY-WASHBASIN UNIT used on 001K SEE 25-41-51-16A FOR DET	NP		001
-120G	D2549020601475		. . DOOR ASSY-WASHBASIN UNIT used on 001N SEE 25-41-51-160 FOR DET	NP		001
-120H	D2549020603075		. . DOOR ASSY-WASHBASIN UNIT POST VSB A2-254-25-032 used on 001A SEE 25-41-51-16A FOR DET	NP		001
130A	D2549020603076		. . PANEL ASSY-WASHBASIN UNIT PRE VSB A2-254-25-013 PRE VSB A2-254-25-032 used on 001A, 001B, 001D, 001G, 001M, 001Q, 001R SEE 25-41-51-17A FOR DET	NP		001
-130B	D2549010509076		. . PANEL ASSY-WASHBASIN UNIT used on 001C, 001J, 001S SEE 25-41-51-17A FOR DET	NP		001
-130C	D2549020601676		. . PANEL ASSY-WASHBASIN UNIT used on 001E, 001H SEE 25-41-51-17A FOR DET	NP		001

- ITEM NOT ILLUSTRATED

FIG. ITEM	PART NUMBER	AIRLINE STOCK NUMBER	NOMENCLATURE 1234567		EFF CODE	UNITS PER ASSY
-130D	D2549030500876		. . PANEL ASSY-WASHBASIN UNIT used on 001F, 001P SEE 25-41-51-17B FOR DET	NP		001
-130E	D2549010506876		. . PANEL ASSY-WASHBASIN UNIT used on 001L SEE 25-41-51-17B FOR DET	NP		001
-130F	D2549020602676		. . PANEL ASSY-WASHBASIN UNIT used on 001K SEE 25-41-51-17B FOR DET	NP		001
-130G	D2549020601476		. . PANEL ASSY-WASHBASIN UNIT used on 001N SEE 25-41-51-17A FOR DET	NP		001
-130H	D2549020603076		. . PANEL ASSY-WASHBASIN UNIT POST VSB A2-254-25-013 used on 001A SEE 25-41-51-17A FOR DET	NP		001
-130J	D2549020603076		. . PANEL ASSY-WASHBASIN UNIT POST VSB A2-254-25-032 used on 001A SEE 25-41-51-17A FOR DET	NP		001
140A	D2549020602677		. . BIN-WASTE,CHUTE-WASTE AND EXTINGUISHER-FIRE PRE VSB A2-254-25-013 PRE VSB A2-254-25-032 used on 001A, 001D, 001E, 001G, 001H, 001J, 001K, 001L, 001S SEE 25-41-51-180 FOR DET	NP		001

- ITEM NOT ILLUSTRATED

FIG. ITEM	PART NUMBER	AIRLINE STOCK NUMBER	NOMENCLATURE 1234567		EFF CODE	UNITS PER ASSY
-140B	D2549020603677		. . BIN-WASTE,CHUTE-WASTE AND EXTINGUISHER-FIRE used on 001B, 001M, 001Q, 001R SEE 25-41-51-180 FOR DET	NP		001
-140C	D2549010500077		. . BIN-WASTE,CHUTE-WASTE AND EXTINGUISHER-FIRE used on 001C, 001F, 001P SEE 25-41-51-180 FOR DET	NP		001
-140D	D2549020600477		. . BIN-WASTE,CHUTE-WASTE AND EXTINGUISHER-FIRE used on 001N SEE 25-41-51-180 FOR DET	NP		001
-140E	D2549020602677		. . BIN-WASTE,CHUTE-WASTE AND EXTINGUISHER-FIRE POST VSB A2-254-25-013 POST VSB A2-254-25-032 used on 001A SEE 25-41-51-180 FOR DET	NP		001
150A	D2549030503478		. . CABINET-SERVICE PRE VSB A2-254-25-013 PRE VSB A2-254-25-032 used on 001A, 001D, 001E, 001G, 001H, 001K, 001L SEE 25-41-51-19B FOR DET	NP		001
-150B	D2549020603678		. . CABINET-SERVICE used on 001B, 001M, 001Q, 001R SEE 25-41-51-190 FOR DET	NP		001
-150C	D2549010501078		. . CABINET-SERVICE used on 001C SEE 25-41-51-19C FOR DET	NP		001
-150D	D2549020503678		. . CABINET-SERVICE used on 001F, 001P SEE 25-41-51-19B FOR DET	NP		001

- ITEM NOT ILLUSTRATED

FIG. ITEM	PART NUMBER	AIRLINE STOCK NUMBER	NOMENCLATURE 1234567	EFF CODE	UNITS PER ASSY
-150E	D2549010511278		. . CABINET-SERVICE NP used on 001J, 001S SEE 25-41-51-19C FOR DET		001
-150F	D2549020600078		. . CABINET-SERVICE NP used on 001N SEE 25-41-51-19B FOR DET		001
-150G	D2549030503478		. . CABINET-SERVICE NP POST VSB A2-254-25-013 used on 001A SEE 25-41-51-19B FOR DET		001
-150H	D2549030503478		. . CABINET-SERVICE NP POST VSB A2-254-25-032 used on 001A SEE 25-41-51-19B FOR DET		001
160A	D2549010500479		. . TABLE-NURSING NP used on 001A, 001B, 001D, 001E, 001F, 001G, 001H, 001K, 001L, 001M, 001N, 001P, 001Q, 001R SEE 25-41-51-200 FOR DET		001
-160B	D2549010512679		. . TABLE-NURSING NP used on 001C, 001J, 001S SEE 25-41-51-20A FOR DET		001
170A	D2549010500080		. . VENTILATION SYSTEM NP used on 001A, 001B, 001C, 001D, 001E, 001F, 001G, 001H, 001J, 001K, 001L, 001M, 001N, 001P, 001Q, 001R, 001S SEE 25-41-51-210 FOR DET		001

- ITEM NOT ILLUSTRATED

FIG. ITEM	PART NUMBER	AIRLINE STOCK NUMBER	NOMENCLATURE 1234567		EFF CODE	UNITS PER ASSY
180A	D2549010501881		. . WATER SYSTEM-POTABLE PRE VSB A2-254-25-013 PRE VSB A2-254-25-032 used on 001A, 001C, 001D, 001E, 001G, 001H, 001J, 001K, 001L, 001S SEE 25-41-51-220 FOR DET	NP		001
-180B	D2549020603681		. . WATER SYSTEM-POTABLE used on 001B, 001M, 001Q, 001R SEE 25-41-51-22B FOR DET	NP		001
-180C	D2549030500881		. . WATER SYSTEM-POTABLE used on 001F, 001P SEE 25-41-51-220 FOR DET	NP		001
-180D	D2549010506881		. . WATER SYSTEM-POTABLE used on 001N SEE 25-41-51-220 FOR DET	NP		001
-180E	D2549010501881		. . WATER SYSTEM-POTABLE POST VSB A2-254-25-013 used on 001A SEE 25-41-51-220 FOR DET	NP		001
-180F	D2549010501881		. . WATER SYSTEM-POTABLE POST VSB A2-254-25-032 used on 001A SEE 25-41-51-220 FOR DET	NP		001
190A	D2549010505682		. . WATER SYSTEM-WASTE PRE VSB A2-254-25-013 PRE VSB A2-254-25-032 used on 001A SEE 25-41-51-230 FOR DET	NP		001
-190B	D2549020600482		. . WATER SYSTEM-WASTE used on 001B, 001H, 001Q, 001R SEE 25-41-51-23C FOR DET	NP		001

- ITEM NOT ILLUSTRATED

FIG. ITEM	PART NUMBER	AIRLINE STOCK NUMBER	NOMENCLATURE 1234567		EFF CODE	UNITS PER ASSY
-190C	D2549030500282		. . WATER SYSTEM-WASTE used on 001C, 001D, 001E, 001G, 001J, 001K, 001L, 001S SEE 25-41-51-230 FOR DET	NP		001
-190D	D2549030500882		. . WATER SYSTEM-WASTE used on 001F, 001P SEE 25-41-51-230 FOR DET	NP		001
-190E	D2549010506882		. . WATER SYSTEM-WASTE used on 001M, 001N SEE 25-41-51-23C FOR DET	NP		001
-190F	D2549010505682		. . WATER SYSTEM-WASTE POST VSB A2-254-25-013 used on 001A SEE 25-41-51-230 FOR DET	NP		001
-190G	D2549010505682		. . WATER SYSTEM-WASTE POST VSB A2-254-25-032 used on 001A SEE 25-41-51-230 FOR DET	NP		001
200A	D2549030500483		. . ELECTRICAL SYSTEM PRE VSB A2-254-25-032 used on 001A, 001C, 001D, 001E, 001F, 001G, 001H, 001J, 001K, 001P, 001S SEE 25-41-51-260 FOR DET	NP		001
-200B	D2549020603683		. . ELECTRICAL SYSTEM used on 001B, 001M SEE 25-41-51-260 FOR DET	NP		001
-200C	D2549020606683		. . ELECTRICAL SYSTEM used on 001L SEE 25-41-51-260 FOR DET	NP		001
-200D	D2549020600483		. . ELECTRICAL SYSTEM used on 001N SEE 25-41-51-260 FOR DET	NP		001

- ITEM NOT ILLUSTRATED

FIG. ITEM	PART NUMBER	AIRLINE STOCK NUMBER	NOMENCLATURE 1234567		EFF CODE	UNITS PER ASSY
-200E	F2547160007483		. . ELECTRICAL SYSTEM used on 001Q, 001R SEE 25-41-51-26Q FOR DET	NP		001
-200F	D2549030500483		. . ELECTRICAL SYSTEM POST VSB A2-254-25-032 used on 001A SEE 25-41-51-260 FOR DET	NP		001

- ITEM NOT ILLUSTRATED

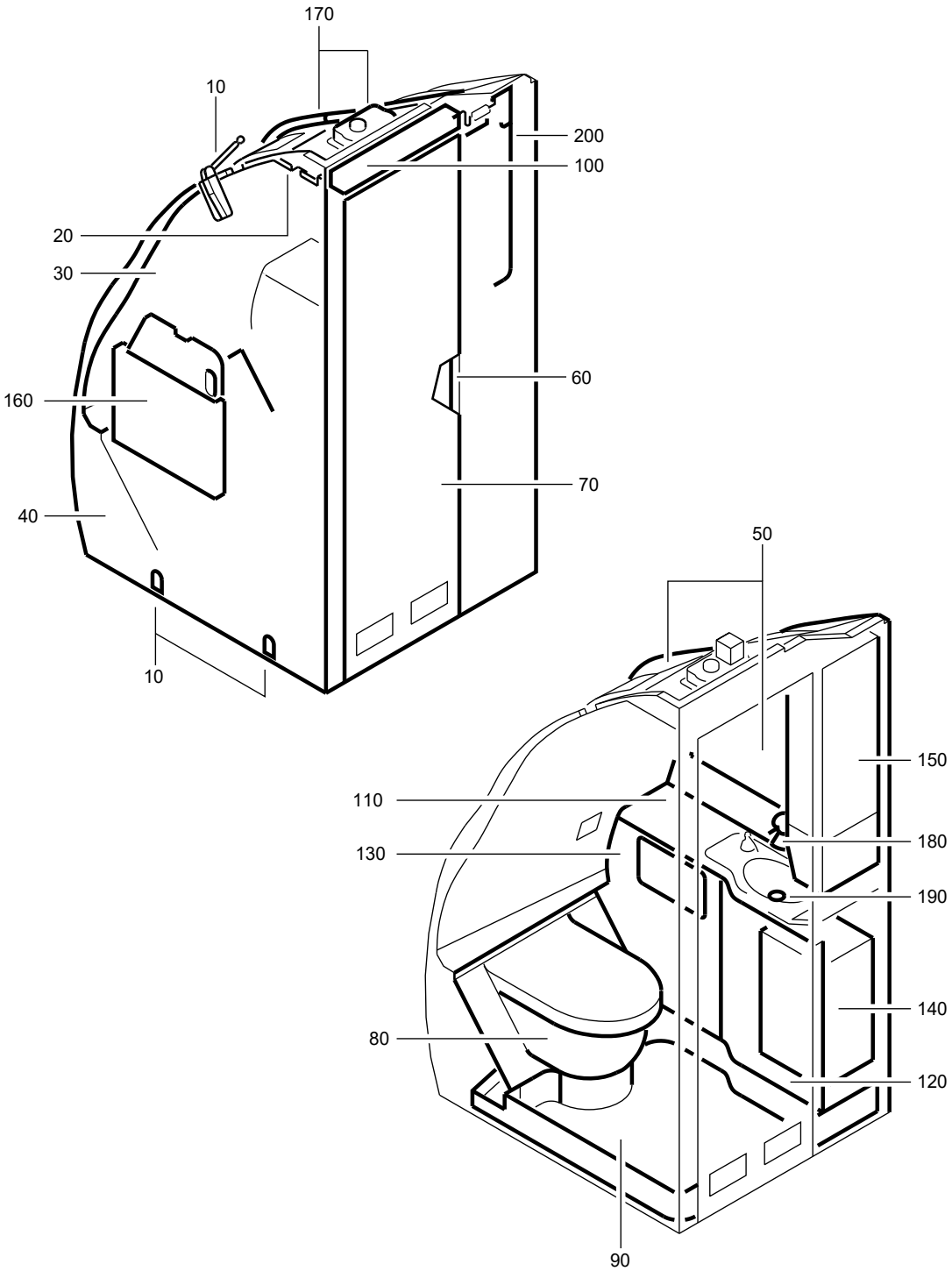

F_PL_254151_01_J_01_00

LAVATORY A ASSY
Figure 01J/EN254151SHEET01J01

FIG. ITEM	PART NUMBER	AIRLINE STOCK NUMBER	NOMENCLATURE 1234567	EFF CODE	UNITS PER ASSY
01J					
-001A	D2549030504800		. LAVATORY A ASSY SEE SIL 25-117 FOR DET		RF
-001B	D2549010511000		. LAVATORY A ASSY SEE SIL 25-117 FOR DET		RF
-001C	D2549020505400		. LAVATORY A ASSY SEE SIL 25-117 FOR DET		RF
-001D	D2549030505200		. LAVATORY A ASSY PRE VSB A2-254-25-131 SEE SIL 25-117 FOR DET		RF
-001E	D2549020607000		. LAVATORY A ASSY PRE VSB A2-254-25-057 SEE SIL 25-117 FOR DET		RF
-001F	D2549030504000		. LAVATORY A ASSY SEE SIL 25-117 FOR DET		RF
-001G	D2549020506200		. LAVATORY A ASSY SEE SIL 25-117 FOR DET		RF
-001H	D2549010509400		. LAVATORY A ASSY SEE SIL 25-117 FOR DET		RF
-001J	D2549030505400		. LAVATORY A ASSY SEE SIL 25-117 FOR DET		RF
-001K	D2549010509600		. LAVATORY A ASSY SEE SIL 25-117 FOR DET		RF
-001L	D2549010510400		. LAVATORY A ASSY SEE SIL 25-117 FOR DET		RF
-001M	D2549030505800		. LAVATORY A ASSY SEE SIL 25-117 FOR DET		RF
-001N	D2549030506800		. LAVATORY A ASSY SEE SIL 25-117 FOR DET		RF

- ITEM NOT ILLUSTRATED

FIG. ITEM	PART NUMBER	AIRLINE STOCK NUMBER	NOMENCLATURE 1234567	EFF CODE	UNITS PER ASSY
-001P	D2549020607000		. LAVATORY A ASSY SEE SIL 25-117 FOR DET		RF
-001Q	D2549030504000		. LAVATORY A ASSY SEE SIL 25-117 FOR DET		RF
-001R	D2549020506200		. LAVATORY A ASSY SEE SIL 25-117 FOR DET		RF
-001S	R225401159-000		. LAVATORY A ASSY POST VSB A2-254-25-057		RF
-001T	R225401137-000		. LAVATORY A ASSY POST VSB A2-254-25-131		RF
010A	D2549020602661		. . ATTACHMENT-LAVATORY NP used on 001A, 001B, 001D, 001E, 001F, 001H, 001J, 001K, 001L, 001S, 001T SEE 25-41-51-020 FOR DET		001
-010B	D2549020602861		. . ATTACHMENT-LAVATORY NP used on 001G SEE 25-41-51-020 FOR DET		001
-010C	D2549020610061		. . ATTACHMENT-LAVATORY NP used on 001C, 001M, 001N SEE 25-41-51-02D FOR DET		001
-010D	D2549020602861		. . ATTACHMENT-LAVATORY NP used on 001R SEE 25-41-51-020 FOR DET		001
-010E	D2549020602661		. . ATTACHMENT-LAVATORY NP used on 001P, 001Q SEE 25-41-51-020 FOR DET		001

- ITEM NOT ILLUSTRATED

FIG. ITEM	PART NUMBER	AIRLINE STOCK NUMBER	NOMENCLATURE 1234567		EFF CODE	UNITS PER ASSY
020A	D2549020602663		. . PANEL-CEILING used on 001A, 001B, 001C, 001D, 001E, 001F, 001H, 001K, 001L, 001M, 001N, 001P, 001Q, 001S, 001T SEE 25-41-51-040 FOR DET	NP		001
-020B	D2549020602863		. . PANEL-CEILING used on 001G, 001J, 001R SEE 25-41-51-040 FOR DET	NP		001
030A	D2549020602664		. . WALL-REAR used on 001A, 001B, 001K SEE 25-41-51-050 FOR DET	NP		001
-030B	D2549030505264		. . WALL-REAR used on 001D, 001E, 001S, 001T SEE 25-41-51-050 FOR DET	NP		001
-030C	D2549030504064		. . WALL-REAR used on 001F SEE 25-41-51-050 FOR DET	NP		001
-030D	D2549020506264		. . WALL-REAR used on 001G SEE 25-41-51-050 FOR DET	NP		001
-030E	D2549030505464		. . WALL-REAR used on 001J SEE 25-41-51-05A FOR DET	NP		001
-030F	D2549010510464		. . WALL-REAR used on 001L SEE 25-41-51-05A FOR DET	NP		001
-030G	D2549010510064		. . WALL-REAR used on 001M, 001N SEE 25-41-51-05B FOR DET	NP		001

- ITEM NOT ILLUSTRATED

FIG. ITEM	PART NUMBER	AIRLINE STOCK NUMBER	NOMENCLATURE 1234567	EFF CODE	UNITS PER ASSY
-030H	D2549010501064		. . WALL-REAR NP used on 001C SEE 25-41-51-05A FOR DET		001
-030J	D2549010509064		. . WALL-REAR NP used on 001H SEE 25-41-51-050 FOR DET		001
-030K	D2549030505264		. . WALL-REAR NP used on 001P, 001R SEE 25-41-51-050 FOR DET		001
-030L	D2549030504064		. . WALL-REAR NP used on 001Q SEE 25-41-51-050 FOR DET		001
040A	D2549030504865		. . WALL-SIDE NP used on 001A SEE 25-41-51-06D FOR DET		001
-040B	D2549010509265		. . WALL-SIDE NP used on 001B SEE 25-41-51-06E FOR DET		001
-040C	D2549010502065		. . WALL-SIDE NP used on 001C SEE 25-41-51-48E FOR DET		001
-040D	D2549030505265		. . WALL-SIDE NP used on 001D, 001T SEE 25-41-51-06E FOR DET		001
-040E	D2549020607065		. . WALL-SIDE NP used on 001E, 001S SEE 25-41-51-06E FOR DET		001
-040F	D2549030504065		. . WALL-SIDE NP used on 001F SEE 25-41-51-06F FOR DET		001

- ITEM NOT ILLUSTRATED

FIG. ITEM	PART NUMBER	AIRLINE STOCK NUMBER	NOMENCLATURE 1234567	EFF CODE	UNITS PER ASSY
-040G	D2549020506265		. . WALL-SIDE NP used on 001G SEE 25-41-51-06F FOR DET		001
-040H	D2549010509465		. . WALL-SIDE NP used on 001H SEE 25-41-51-06F FOR DET		001
-040J	D2549030505465		. . WALL-SIDE NP used on 001J SEE 25-41-51-06C FOR DET		001
-040K	D2549010509665		. . WALL-SIDE NP used on 001K SEE 25-41-51-06F FOR DET		001
-040L	D2549010510465		. . WALL-SIDE NP used on 001L SEE 25-41-51-06F FOR DET		001
-040M	D2549030505865		. . WALL-SIDE NP used on 001M SEE 25-41-51-06G FOR DET		001
-040N	D2549030506865		. . WALL-SIDE NP used on 001N SEE 25-41-51-06G FOR DET		001
-040P	D2549020607065		. . WALL-SIDE NP used on 001P SEE 25-41-51-06E FOR DET		001
-040Q	D2549030504065		. . WALL-SIDE NP used on 001Q SEE 25-41-51-06F FOR DET		001
-040R	D2549020506265		. . WALL-SIDE NP used on 001R SEE 25-41-51-06F FOR DET		001

- ITEM NOT ILLUSTRATED

FIG. ITEM	PART NUMBER	AIRLINE STOCK NUMBER	NOMENCLATURE 1234567	EFF CODE	UNITS PER ASSY
050A	D2549030504866		. . HOUSING NP used on 001A SEE 25-41-51-07B FOR DET		001
-050B	D2549010511066		. . HOUSING NP used on 001B SEE 25-41-51-07B FOR DET		001
-050C	D2549010501066		. . HOUSING NP used on 001C SEE 25-41-51-07Y FOR DET		001
-050D	D2549030505266		. . HOUSING NP used on 001D, 001T SEE 25-41-51-07B FOR DET		001
-050E	D2549020607066		. . HOUSING NP used on 001E, 001K, 001P, 001S SEE 25-41-51-07Y FOR DET		001
-050F	D2549030504066		. . HOUSING NP used on 001F, 001Q SEE 25-41-51-07D FOR DET		001
-050G	D2549020506266		. . HOUSING NP used on 001G, 001J, 001R SEE 25-41-51-07D FOR DET		001
-050H	D2549010509466		. . HOUSING NP used on 001H SEE 25-41-51-07D FOR DET		001
-050J	D2549010510466		. . HOUSING NP used on 001L SEE 25-41-51-07D FOR DET		001
-050K	D2549030505866		. . HOUSING NP used on 001M, 001N SEE 25-41-51-07D FOR DET		001

- ITEM NOT ILLUSTRATED

FIG. ITEM	PART NUMBER	AIRLINE STOCK NUMBER	NOMENCLATURE 1234567	EFF CODE	UNITS PER ASSY
060A	D2549010500069		. . DOOR INSTL NP used on 001A, 001B, 001C, 001D, 001E, 001F, 001G, 001H, 001J, 001K, 001L, 001M, 001N, 001P, 001Q, 001R, 001S, 001T SEE 25-41-51-100 FOR DET		001
070A	A225400276-532		. . DOOR ASSY-SINGLE used on 001A SEE 25-41-51-11B FOR DET		001
-070B	A225400276-502		. . DOOR ASSY-SINGLE used on 001B, 001H SEE 25-41-51-11B FOR DET		001
-070C	A225400270-512		. . DOOR ASSY-SINGLE used on 001C SEE 25-41-51-110 FOR DET		001
-070D	A225400276-530		. . DOOR ASSY-SINGLE used on 001D, 001T SEE 25-41-51-11B FOR DET		001
-070E	A225400276-508		. . DOOR ASSY-SINGLE used on 001E, 001P, 001S SEE 25-41-51-11B FOR DET		001
-070F	A225400276-900		. . DOOR ASSY-SINGLE used on 001F, 001Q SEE 25-41-51-11B FOR DET		001
-070G	A225400276-504		. . DOOR ASSY-SINGLE used on 001G, 001J, 001R SEE 25-41-51-11B FOR DET		001
-070H	A225400276-904		. . DOOR ASSY-SINGLE used on 001K SEE 25-41-51-11B FOR DET		001

- ITEM NOT ILLUSTRATED

FIG. ITEM	PART NUMBER	AIRLINE STOCK NUMBER	NOMENCLATURE 1234567		EFF CODE	UNITS PER ASSY
-070J	A225400276-910		. . DOOR ASSY-SINGLE used on 001L SEE 25-41-51-11B FOR DET			001
-070K	A225400276-546		. . DOOR ASSY-SINGLE used on 001M, 001N SEE 25-41-51-11C FOR DET			001
080A	D2549020604271		. . TOILET UNIT AND TOILET SHROUD used on 001A, 001B, 001D, 001E, 001F, 001K, 001M, 001N, 001P, 001Q, 001S, 001T SEE 25-41-51-12C FOR DET	NP		001
-080B	D2549010507071		. . TOILET UNIT AND TOILET SHROUD used on 001C SEE 25-41-51-12A FOR DET	NP		001
-080C	D2549020506271		. . TOILET UNIT AND TOILET SHROUD used on 001G, 001J, 001R SEE 25-41-51-12C FOR DET	NP		001
-080D	D2549010510271		. . TOILET UNIT AND TOILET SHROUD used on 001H SEE 25-41-51-12C FOR DET	NP		001
-080E	D2549010510471		. . TOILET UNIT AND TOILET SHROUD used on 001L SEE 25-41-51-12C FOR DET	NP		001
090A	D2549030506272		. . PAN-FLOOR used on 001A SEE 25-41-51-13B FOR DET	NP		001

- ITEM NOT ILLUSTRATED

FIG. ITEM	PART NUMBER	AIRLINE STOCK NUMBER	NOMENCLATURE 1234567		EFF CODE	UNITS PER ASSY
-090B	D2549020604872		. . PAN-FLOOR used on 001B SEE 25-41-51-13C FOR DET	NP		001
-090C	D2549010502072		. . PAN-FLOOR used on 001C SEE 25-41-51-130 FOR DET	NP		001
-090D	D2549020610672		. . PAN-FLOOR PRE VSB A2-254-25-131 used on 001D SEE 25-41-51-13C FOR DET	NP		001
-090E	D2549020607072		. . PAN-FLOOR used on 001E, 001S SEE 25-41-51-13A FOR DET	NP		001
-090F	D2549030504072		. . PAN-FLOOR used on 001F, 001K SEE 25-41-51-13B FOR DET	NP		001
-090G	D2549020506272		. . PAN-FLOOR used on 001G, 001J SEE 25-41-51-13B FOR DET	NP		001
-090H	D2549010509472		. . PAN-FLOOR used on 001H SEE 25-41-51-13B FOR DET	NP		001
-090J	D2549010510472		. . PAN-FLOOR used on 001L SEE 25-41-51-13B FOR DET	NP		001
-090K	D2549030505872		. . PAN-FLOOR used on 001M, 001N SEE 25-41-51-13B FOR DET	NP		001
-090L	D2549020701272		. . PAN-FLOOR POST SB 25-1289 used on 001P SEE 25-41-51-13V FOR DET	NP		001

- ITEM NOT ILLUSTRATED

FIG. ITEM	PART NUMBER	AIRLINE STOCK NUMBER	NOMENCLATURE 1234567		EFF CODE	UNITS PER ASSY
-090M	D2549010601672		. . PAN-FLOOR POST SB 25-1289 used on 001Q SEE 25-41-51-13V FOR DET	NP		001
-090N	D2549020701672		. . PAN-FLOOR POST SB 25-1289 used on 001R SEE 25-41-51-13V FOR DET	NP		001
-090P	R22540113700072		. . PAN-FLOOR POST VSB A2-254-25-131 used on 001T SEE 25-41-51-13C FOR DET	NP		001
100A	D2549020602673		. . LIGHT-DOOR used on 001A, 001B, 001C, 001D, 001E, 001F, 001H, 001K, 001L, 001M, 001N, 001P, 001Q, 001S, 001T SEE 25-41-51-140 FOR DET	NP		001
-100B	D2549020602873		. . LIGHT-DOOR used on 001G, 001J, 001R SEE 25-41-51-140 FOR DET	NP		001
110A	D2549030504874		. . WASHBASIN UNIT used on 001A, 001D, 001T SEE 25-41-51-15C FOR DET	NP		001
-110B	D2549010511074		. . WASHBASIN UNIT used on 001B, 001E, 001F, 001H, 001K, 001P, 001Q, 001S SEE 25-41-51-15C FOR DET	NP		001
-110C	D2549020500274		. . WASHBASIN UNIT used on 001C SEE 25-41-51-150 FOR DET	NP		001

- ITEM NOT ILLUSTRATED

FIG. ITEM	PART NUMBER	AIRLINE STOCK NUMBER	NOMENCLATURE 1234567		EFF CODE	UNITS PER ASSY
-110D	D2549030509474		. . WASHBASIN UNIT used on 001G, 001J, 001R SEE 25-41-51-15F FOR DET	NP		001
-110E	D2549010510474		. . WASHBASIN UNIT used on 001L SEE 25-41-51-15C FOR DET	NP		001
-110F	D2549020614474		. . WASHBASIN UNIT used on 001M, 001N SEE 25-41-51-15F FOR DET	NP		001
120A	D2549030504875		. . DOOR ASSY-WASHBASIN UNIT used on 001A, 001B SEE 25-41-51-16B FOR DET	NP		001
-120B	D2549010509075		. . DOOR ASSY-WASHBASIN UNIT used on 001C SEE 25-41-51-16A FOR DET	NP		001
-120C	D2549020607075		. . DOOR ASSY-WASHBASIN UNIT used on 001E, 001K, 001M, 001N, 001P, 001S SEE 25-41-51-16B FOR DET	NP		001
-120D	D2549030504075		. . DOOR ASSY-WASHBASIN UNIT used on 001D, 001F, 001Q, 001T SEE 25-41-51-16B FOR DET	NP		001
-120E	D2549030505475		. . DOOR ASSY-WASHBASIN UNIT used on 001G, 001J, 001R SEE 25-41-51-16B FOR DET	NP		001

- ITEM NOT ILLUSTRATED

FIG. ITEM	PART NUMBER	AIRLINE STOCK NUMBER	NOMENCLATURE 1234567	EFF CODE	UNITS PER ASSY
-120F	D2549010509475		. . DOOR ASSY-WASHBASIN UNIT NP used on 001H SEE 25-41-51-16B FOR DET		001
-120G	D2549010510475		. . DOOR ASSY-WASHBASIN UNIT NP used on 001L SEE 25-41-51-16B FOR DET		001
130A	D2549030504876		. . PANEL ASSY-WASHBASIN UNIT NP used on 001A, 001B, 001D, 001E, 001F, 001K, 001M, 001N, 001P, 001Q, 001S, 001T SEE 25-41-51-17C FOR DET		001
-130B	D2549010509076		. . PANEL ASSY-WASHBASIN UNIT NP used on 001C SEE 25-41-51-17A FOR DET		001
-130C	D2549020506276		. . PANEL ASSY-WASHBASIN UNIT NP used on 001G, 001J, 001R SEE 25-41-51-17C FOR DET		001
-130D	D2549010509476		. . PANEL ASSY-WASHBASIN UNIT NP used on 001H SEE 25-41-51-17C FOR DET		001
-130E	D2549010510476		. . PANEL ASSY-WASHBASIN UNIT NP used on 001L SEE 25-41-51-17C FOR DET		001

- ITEM NOT ILLUSTRATED

FIG. ITEM	PART NUMBER	AIRLINE STOCK NUMBER	NOMENCLATURE 1234567	EFF CODE	UNITS PER ASSY
140A	D2549030504877		. . BIN-WASTE,CHUTE-WASTE AND EXTINGUISHER-FIRE NP used on 001A, 001B, 001D, 001E, 001F, 001K, 001L, 001M, 001N, 001P, 001Q, 001S, 001T SEE 25-41-51-180 FOR DET		001
-140B	D2549020602677		. . BIN-WASTE,CHUTE-WASTE AND EXTINGUISHER-FIRE NP used on 001C SEE 25-41-51-180 FOR DET		001
-140C	D2549020506277		. . BIN-WASTE,CHUTE-WASTE AND EXTINGUISHER-FIRE NP used on 001G, 001J, 001R SEE 25-41-51-180 FOR DET		001
-140D	D2549010509477		. . BIN-WASTE,CHUTE-WASTE AND EXTINGUISHER-FIRE NP used on 001H SEE 25-41-51-180 FOR DET		001
150A	D2549030504878		. . CABINET-SERVICE NP used on 001A, 001B, 001E, 001K, 001P, 001S SEE 25-41-51-19E FOR DET		001
-150B	D2549010511278		. . CABINET-SERVICE NP used on 001C SEE 25-41-51-19C FOR DET		001
-150C	D2549030505278		. . CABINET-SERVICE NP used on 001D, 001T SEE 25-41-51-19E FOR DET		001
-150D	D2549030504078		. . CABINET-SERVICE NP used on 001F, 001L, 001Q SEE 25-41-51-19E FOR DET		001

- ITEM NOT ILLUSTRATED

FIG. ITEM	PART NUMBER	AIRLINE STOCK NUMBER	NOMENCLATURE 1234567		EFF CODE	UNITS PER ASSY
-150E	D2549020506278		. . CABINET-SERVICE used on 001G, 001R SEE 25-41-51-19E FOR DET	NP		001
-150F	D2549010509478		. . CABINET-SERVICE used on 001H SEE 25-41-51-19E FOR DET	NP		001
-150G	D2549030505478		. . CABINET-SERVICE used on 001J SEE 25-41-51-19E FOR DET	NP		001
-150H	D2549030505878		. . CABINET-SERVICE used on 001M, 001N SEE 25-41-51-19E FOR DET	NP		001
160A	D2549010500479		. . TABLE-NURSING used on 001A, 001B, 001D, 001E, 001F, 001K, 001L, 001M, 001N, 001P, 001Q, 001S, 001T SEE 25-41-51-200 FOR DET	NP		001
-160B	D2549020500079		. . TABLE-NURSING used on 001G, 001J, 001R SEE 25-41-51-200 FOR DET	NP		001
-160C	D2549010512679		. . TABLE-NURSING used on 001C SEE 25-41-51-20A FOR DET	NP		001
-160D	D2549010510679		. . TABLE-NURSING used on 001H SEE 25-41-51-20A FOR DET	NP		001
170A	D2549030504880		. . VENTILATION SYSTEM used on 001A, 001B, 001D, 001E, 001F, 001K, 001L, 001M, 001N, 001P, 001Q, 001S, 001T SEE 25-41-51-210 FOR DET	NP		001

- ITEM NOT ILLUSTRATED

FIG. ITEM	PART NUMBER	AIRLINE STOCK NUMBER	NOMENCLATURE 1234567		EFF CODE	UNITS PER ASSY
-170B	D2549010500080		. . VENTILATION SYSTEM used on 001C SEE 25-41-51-210 FOR DET	NP		001
-170C	D2549020506280		. . VENTILATION SYSTEM used on 001G, 001J, 001R SEE 25-41-51-210 FOR DET	NP		001
-170D	D2549010509480		. . VENTILATION SYSTEM used on 001H SEE 25-41-51-210 FOR DET	NP		001
180A	D2549030504881		. . WATER SYSTEM-POTABLE used on 001A, 001B, 001D, 001E, 001H, 001K, 001M, 001N, 001P, 001S, 001T SEE 25-41-51-22D FOR DET	NP		001
-180B	D2549010501881		. . WATER SYSTEM-POTABLE used on 001C SEE 25-41-51-220 FOR DET	NP		001
-180C	D2549030504081		. . WATER SYSTEM-POTABLE used on 001F, 001Q SEE 25-41-51-22G FOR DET	NP		001
-180D	D2549010510481		. . WATER SYSTEM-POTABLE used on 001L SEE 25-41-51-22F FOR DET	NP		001
-180E	D2549020506281		. . WATER SYSTEM-POTABLE used on 001G, 001R SEE 25-41-51-22E FOR DET	NP		001
-180F	D2549030505481		. . WATER SYSTEM-POTABLE used on 001J SEE 25-41-51-22E FOR DET	NP		001

- ITEM NOT ILLUSTRATED

FIG. ITEM	PART NUMBER	AIRLINE STOCK NUMBER	NOMENCLATURE 1234567	EFF CODE	UNITS PER ASSY
190A	D2549030504882		. . WATER SYSTEM-WASTE NP used on 001A, 001D, 001M, 001N, 001T SEE 25-41-51-23B FOR DET		001
-190B	D2549010511082		. . WATER SYSTEM-WASTE NP used on 001B, 001E, 001H, 001K, 001L, 001P, 001S SEE 25-41-51-23B FOR DET		001
-190C	D2549030500282		. . WATER SYSTEM-WASTE NP used on 001C SEE 25-41-51-230 FOR DET		001
-190D	D2549020506282		. . WATER SYSTEM-WASTE NP used on 001G, 001J, 001R SEE 25-41-51-23B FOR DET		001
-190E	D2549030504082		. . WATER SYSTEM-WASTE NP used on 001F, 001Q SEE 25-41-51-23B FOR DET		001
200A	D2549030504883		. . ELECTRICAL SYSTEM NP used on 001A, 001B, 001D, 001E, 001F, 001K, 001M, 001N, 001P, 001Q, 001S, 001T SEE 25-41-51-26C FOR DET		001
-200B	D2549030500483		. . ELECTRICAL SYSTEM NP used on 001C SEE 25-41-51-260 FOR DET		001
-200C	D2549020506283		. . ELECTRICAL SYSTEM NP used on 001G, 001J, 001R SEE 25-41-51-26C FOR DET		001
-200D	D2549010509483		. . ELECTRICAL SYSTEM NP used on 001H SEE 25-41-51-26C FOR DET		001

- ITEM NOT ILLUSTRATED

FIG. ITEM	PART NUMBER	AIRLINE STOCK NUMBER	NOMENCLATURE 1234567	EFF CODE	UNITS PER ASSY
-200E	D2549010510483		. . ELECTRICAL SYSTEM NP used on 001L SEE 25-41-51-26C FOR DET		001

- ITEM NOT ILLUSTRATED

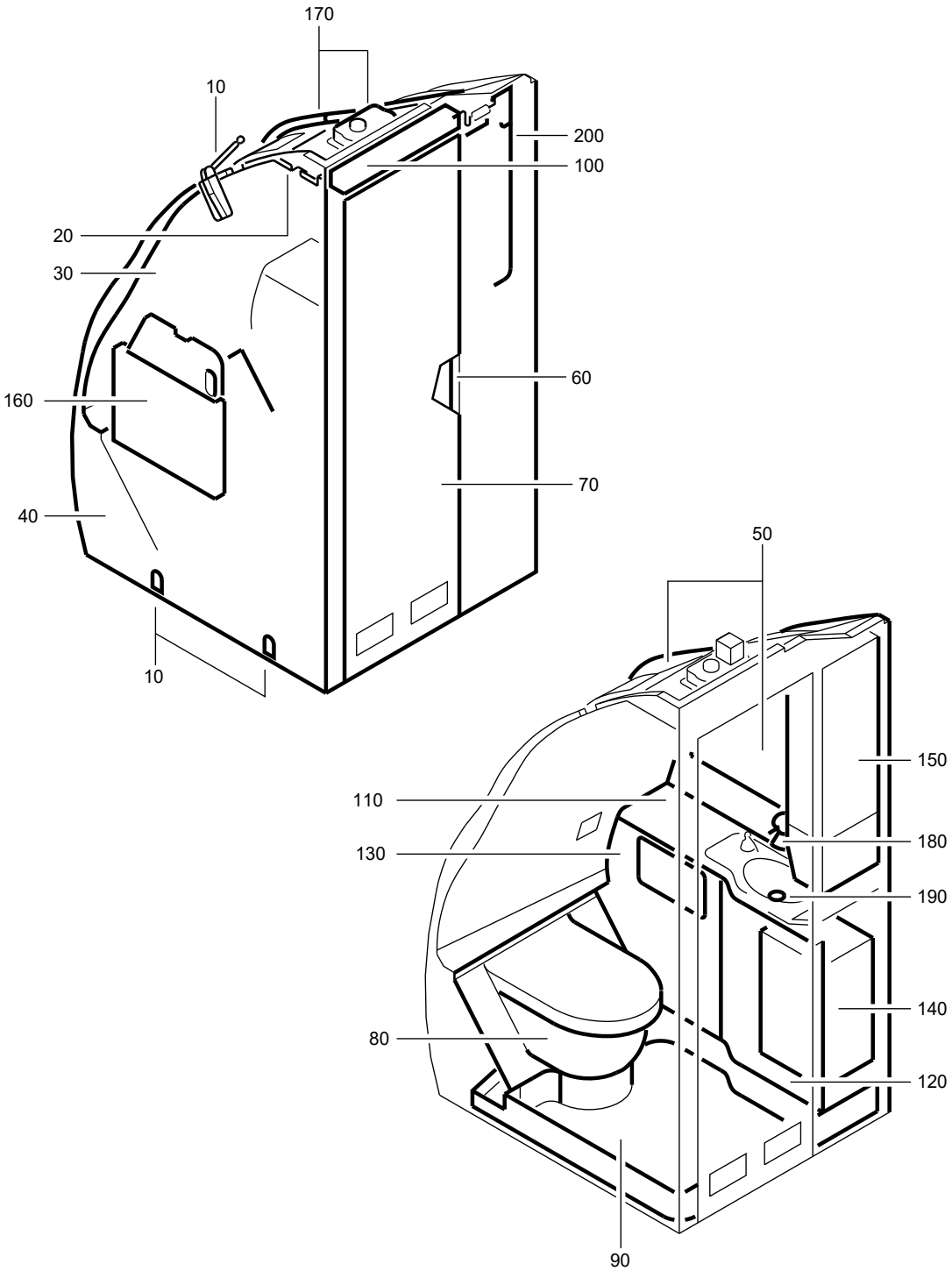

F_PL_254151_01_K_01_00

LAVATORY A ASSY
Figure 01K/EN254151SHEET01K01

FIG. ITEM	PART NUMBER	AIRLINE STOCK NUMBER	NOMENCLATURE 1234567	EFF CODE	UNITS PER ASSY
01K					
-001A	D2549030505600		. LAVATORY A ASSY SEE SIL 25-117 FOR DET		RF
-001B	D2549030504600		. LAVATORY A ASSY SEE SIL 25-117 FOR DET		RF
-001C	D2549020605200		. LAVATORY A ASSY SEE SIL 25-117 FOR DET		RF
-001D	D2549010510000		. LAVATORY A ASSY SEE SIL 25-117 FOR DET		RF
-001E	D2549020604200		. LAVATORY A ASSY SEE SIL 25-117 FOR DET		RF
-001F	D2549010511400		. LAVATORY A ASSY SEE SIL 25-117 FOR DET		RF
-001G	D2549020605600		. LAVATORY A ASSY PRE VSB A2-254-25-046 SEE SIL 25-117 FOR DET		RF
-001H	D2549010510800		. LAVATORY A ASSY SEE SIL 25-117 FOR DET		RF
-001J	D2549020604400		. LAVATORY A ASSY SEE SIL 25-117 FOR DET		RF
-001K	D2549020601600		. LAVATORY A ASSY POST SB 38-1055 SEE SIL 25-117 FOR DET		RF
-001L	D2549020503400		. LAVATORY A ASSY POST SB 25-1312 SEE SIL 25-117 FOR DET		RF
-001M	D2549030500200		. LAVATORY A ASSY POST SB 25-1312 SEE SIL 25-117 FOR DET		RF

- ITEM NOT ILLUSTRATED

FIG. ITEM	PART NUMBER	AIRLINE STOCK NUMBER	NOMENCLATURE 1234567		EFF CODE	UNITS PER ASSY
-001N	D2549010504800		. LAVATORY A ASSY SEE SIL 25-117 FOR DET			RF
-001P	R225401134-002		. LAVATORY A ASSY POST VSB A2-254-25-046			RF
010A	D2549030505661		. . ATTACHMENT-LAVATORY used on 001A SEE 25-41-51-020 FOR DET	NP		001
-010B	D2549020602661		. . ATTACHMENT-LAVATORY used on 001B, 001C, 001D, 001E, 001F, 001H, 001J SEE 25-41-51-020 FOR DET	NP		001
-010C	D2549020602861		. . ATTACHMENT-LAVATORY used on 001G, 001P SEE 25-41-51-020 FOR DET	NP		001
-010D	D2549010500061		. . ATTACHMENT-LAVATORY used on 001K, 001N SEE 25-41-51-020 FOR DET	NP		001
-010E	D2549020610061		. . ATTACHMENT-LAVATORY used on 001L, 001M SEE 25-41-51-02D FOR DET	NP		001
020A	D2549030505663		. . PANEL-CEILING used on 001A SEE 25-41-51-040 FOR DET	NP		001
-020B	D2549020602663		. . PANEL-CEILING used on 001B, 001C, 001D, 001E, 001F, 001H, 001J SEE 25-41-51-040 FOR DET	NP		001
-020C	D2549020602863		. . PANEL-CEILING used on 001G, 001P SEE 25-41-51-040 FOR DET	NP		001

- ITEM NOT ILLUSTRATED

FIG. ITEM	PART NUMBER	AIRLINE STOCK NUMBER	NOMENCLATURE 1234567	EFF CODE	UNITS PER ASSY
-020D	D2549010500063		. . PANEL-CEILING NP used on 001K, 001L, 001M, 001N SEE 25-41-51-040 FOR DET		001
030A	D2549030505664		. . WALL-REAR NP used on 001A SEE 25-41-51-050 FOR DET		001
-030B	D2549030505264		. . WALL-REAR NP used on 001B, 001C, 001E, 001F, 001H, 001J SEE 25-41-51-050 FOR DET		001
-030C	D2549010510064		. . WALL-REAR NP used on 001D SEE 25-41-51-05B FOR DET		001
-030D	D2549020602864		. . WALL-REAR NP used on 001G, 001P SEE 25-41-51-050 FOR DET		001
-030E	D2549010500064		. . WALL-REAR NP used on 001K, 001N SEE 25-41-51-050 FOR DET		001
-030F	D2549010501064		. . WALL-REAR NP used on 001L, 001M SEE 25-41-51-05A FOR DET		001
040A	D2549030505665		. . WALL-SIDE NP used on 001A SEE 25-41-51-06F FOR DET		001
-040B	D2549030504665		. . WALL-SIDE NP used on 001B SEE 25-41-51-06F FOR DET		001
-040C	D2549020605265		. . WALL-SIDE NP used on 001C SEE 25-41-51-06F FOR DET		001

- ITEM NOT ILLUSTRATED

FIG. ITEM	PART NUMBER	AIRLINE STOCK NUMBER	NOMENCLATURE 1234567	EFF CODE	UNITS PER ASSY
-040D	D2549010510065		. . WALL-SIDE NP used on 001D SEE 25-41-51-06G FOR DET		001
-040E	D2549020604265		. . WALL-SIDE NP used on 001E SEE 25-41-51-06F FOR DET		001
-040F	D2549010511465		. . WALL-SIDE NP used on 001F SEE 25-41-51-06F FOR DET		001
-040G	D2549020608265		. . WALL-SIDE NP POST SB 25-1214 used on 001G, 001P SEE 25-41-51-06H FOR DET		001
-040H	D2549020604465		. . WALL-SIDE NP used on 001J SEE 25-41-51-06G FOR DET		001
-040J	D2549010509265		. . WALL-SIDE NP used on 001H SEE 25-41-51-06E FOR DET		001
-040K	D2549020601665		. . WALL-SIDE NP used on 001K SEE 25-41-51-06A FOR DET		001
-040L	D2549020503465		. . WALL-SIDE NP used on 001L SEE 25-41-51-48E FOR DET		001
-040M	D2549030500265		. . WALL-SIDE NP used on 001M SEE 25-41-51-48E FOR DET		001
-040N	D2549010504865		. . WALL-SIDE NP used on 001N SEE 25-41-51-06A FOR DET		001

- ITEM NOT ILLUSTRATED

FIG. ITEM	PART NUMBER	AIRLINE STOCK NUMBER	NOMENCLATURE 1234567		EFF CODE	UNITS PER ASSY
050A	D2549030505666		. . HOUSING used on 001A SEE 25-41-51-07D FOR DET	NP		001
-050B	D2549030504666		. . HOUSING used on 001B, 001D SEE 25-41-51-07D FOR DET	NP		001
-050C	D2549020607066		. . HOUSING used on 001C SEE 25-41-51-07Y FOR DET	NP		001
-050D	D2549020605666		. . HOUSING used on 001G, 001P SEE 25-41-51-07D FOR DET	NP		001
-050E	D2549020604266		. . HOUSING used on 001E SEE 25-41-51-07D FOR DET	NP		001
-050F	D2549010511466		. . HOUSING used on 001F SEE 25-41-51-07C FOR DET	NP		001
-050G	D2549010511066		. . HOUSING used on 001H SEE 25-41-51-07B FOR DET	NP		001
-050H	D2549020604466		. . HOUSING used on 001J SEE 25-41-51-07D FOR DET	NP		001
-050J	D2549020503666		. . HOUSING used on 001K SEE 25-41-51-07Y FOR DET	NP		001
-050K	D2549010501066		. . HOUSING used on 001L, 001M SEE 25-41-51-07Y FOR DET	NP		001

- ITEM NOT ILLUSTRATED

FIG. ITEM	PART NUMBER	AIRLINE STOCK NUMBER	NOMENCLATURE 1234567	EFF CODE	UNITS PER ASSY
-050L	D2549010504866		. . HOUSING NP used on 001N SEE 25-41-51-49B FOR DET		001
060A	D2549010500069		. . DOOR INSTL NP used on 001A, 001B, 001C, 001D, 001E, 001F, 001G, 001H, 001J, 001K, 001L, 001M, 001P SEE 25-41-51-100 FOR DET		001
-060B	D2549020401269		. . DOOR INSTL NP used on 001N SEE 25-41-51-10A FOR DET		001
070A	A225400276-542		. . DOOR ASSY-SINGLE used on 001A SEE 25-41-51-11B FOR DET		001
-070B	A225400276-500		. . DOOR ASSY-SINGLE used on 001B, 001D SEE 25-41-51-11B FOR DET		001
-070C	A225400276-508		. . DOOR ASSY-SINGLE used on 001C SEE 25-41-51-11B FOR DET		001
-070D	A225400276-536		. . DOOR ASSY-SINGLE used on 001G, 001P SEE 25-41-51-11C FOR DET		001
-070E	A225400276-502		. . DOOR ASSY-SINGLE used on 001E, 001H SEE 25-41-51-11B FOR DET		001
-070F	A225400276-544		. . DOOR ASSY-SINGLE used on 001F SEE 25-41-51-11C FOR DET		001
-070G	A225400276-908		. . DOOR ASSY-SINGLE used on 001J SEE 25-41-51-11C FOR DET		001

- ITEM NOT ILLUSTRATED

FIG. ITEM	PART NUMBER	AIRLINE STOCK NUMBER	NOMENCLATURE 1234567		EFF CODE	UNITS PER ASSY
-070H	A225400270-906		. . DOOR ASSY-SINGLE used on 001K SEE 25-41-51-11A FOR DET			001
-070J	A225400270-510		. . DOOR ASSY-SINGLE used on 001L SEE 25-41-51-110 FOR DET			001
-070K	A225400270-512		. . DOOR ASSY-SINGLE used on 001M SEE 25-41-51-110 FOR DET			001
-070L	A2254002708508		. . DOOR ASSY-SINGLE used on 001N SEE 25-41-51-11Q FOR DET			001
080A	D2549010510271		. . TOILET UNIT AND TOILET SHROUD used on 001A SEE 25-41-51-12C FOR DET	NP		001
-080B	D2549030504671		. . TOILET UNIT AND TOILET SHROUD used on 001B SEE 25-41-51-12C FOR DET	NP		001
-080C	D2549020604271		. . TOILET UNIT AND TOILET SHROUD used on 001C, 001E, 001H SEE 25-41-51-12C FOR DET	NP		001
-080D	D2549020608671		. . TOILET UNIT AND TOILET SHROUD used on 001J SEE 25-41-51-12C FOR DET	NP		001
-080E	D2549010510071		. . TOILET UNIT AND TOILET SHROUD used on 001D SEE 25-41-51-12C FOR DET	NP		001

- ITEM NOT ILLUSTRATED

FIG. ITEM	PART NUMBER	AIRLINE STOCK NUMBER	NOMENCLATURE 1234567		EFF CODE	UNITS PER ASSY
-080F	D2549010511471		. . TOILET UNIT AND TOILET SHROUD used on 001F SEE 25-41-51-12C FOR DET	NP		001
-080G	D2549020506271		. . TOILET UNIT AND TOILET SHROUD used on 001G, 001P SEE 25-41-51-12C FOR DET	NP		001
-080H	D2549020601471		. . TOILET UNIT AND TOILET SHROUD used on 001K SEE 25-41-51-12A FOR DET	NP		001
-080J	D2549010501071		. . TOILET UNIT AND TOILET SHROUD used on 001L, 001M SEE 25-41-51-12B FOR DET	NP		001
-080K	D2549010507471		. . TOILET UNIT AND TOILET SHROUD used on 001N SEE 25-41-51-12A FOR DET	NP		001
090A	D2549030504072		. . PAN-FLOOR used on 001A, 001E, 001F SEE 25-41-51-13B FOR DET	NP		001
-090B	D2549030504672		. . PAN-FLOOR used on 001B, 001D SEE 25-41-51-13B FOR DET	NP		001
-090C	D2549020605272		. . PAN-FLOOR used on 001C SEE 25-41-51-13B FOR DET	NP		001
-090D	D2549020608672		. . PAN-FLOOR used on 001J SEE 25-41-51-13B FOR DET	NP		001

- ITEM NOT ILLUSTRATED

FIG. ITEM	PART NUMBER	AIRLINE STOCK NUMBER	NOMENCLATURE 1234567	EFF CODE	UNITS PER ASSY
-090E	D2549020604872		. . PAN-FLOOR NP used on 001H SEE 25-41-51-13C FOR DET		001
-090F	D2549020605672		. . PAN-FLOOR NP used on 001G, 001P SEE 25-41-51-13B FOR DET		001
-090G	D2549020601472		. . PAN-FLOOR NP used on 001K SEE 25-41-51-130 FOR DET		001
-090H	D2549010502072		. . PAN-FLOOR NP used on 001M SEE 25-41-51-130 FOR DET		001
-090J	D2549020503472		. . PAN-FLOOR NP used on 001L SEE 25-41-51-130 FOR DET		001
-090K	D2549020603272		. . PAN-FLOOR NP used on 001N SEE 25-41-51-13U FOR DET		001
100A	D2549030505673		. . LIGHT-DOOR NP used on 001A SEE 25-41-51-140 FOR DET		001
-100B	D2549020602673		. . LIGHT-DOOR NP used on 001B, 001C, 001D, 001E, 001F, 001H, 001J SEE 25-41-51-140 FOR DET		001
-100C	D2549020602873		. . LIGHT-DOOR NP used on 001G, 001P SEE 25-41-51-140 FOR DET		001
-100D	D2549010500073		. . LIGHT-DOOR NP used on 001K, 001L, 001M, 001N SEE 25-41-51-140 FOR DET		001

- ITEM NOT ILLUSTRATED

FIG. ITEM	PART NUMBER	AIRLINE STOCK NUMBER	NOMENCLATURE 1234567	EFF CODE	UNITS PER ASSY
110A	D2549010511074		. . WASHBASIN UNIT NP used on 001A, 001C, 001E, 001H SEE 25-41-51-15C FOR DET		001
-110B	D2549030504674		. . WASHBASIN UNIT NP used on 001B, 001D SEE 25-41-51-15D FOR DET		001
-110C	D2549020613674		. . WASHBASIN UNIT NP used on 001G, 001P SEE 25-41-51-15F FOR DET		001
-110D	D2549010511474		. . WASHBASIN UNIT NP used on 001F SEE 25-41-51-15C FOR DET		001
-110E	D2549020604474		. . WASHBASIN UNIT NP used on 001J SEE 25-41-51-15C FOR DET		001
-110F	D2549020500274		. . WASHBASIN UNIT NP used on 001K, 001L, 001M, 001N SEE 25-41-51-150 FOR DET		001
120A	D2549010509475		. . DOOR ASSY-WASHBASIN UNIT NP used on 001A SEE 25-41-51-16B FOR DET		001
-120B	D2549030504675		. . DOOR ASSY-WASHBASIN UNIT NP used on 001B, 001D SEE 25-41-51-16B FOR DET		001
-120C	D2549020607075		. . DOOR ASSY-WASHBASIN UNIT NP used on 001C, 001E, 001H, 001J SEE 25-41-51-16B FOR DET		001

- ITEM NOT ILLUSTRATED

FIG. ITEM	PART NUMBER	AIRLINE STOCK NUMBER	NOMENCLATURE 1234567		EFF CODE	UNITS PER ASSY
-120D	D2549030505475		. . DOOR ASSY-WASHBASIN UNIT used on 001G, 001P SEE 25-41-51-16B FOR DET	NP		001
-120E	D2549010511475		. . DOOR ASSY-WASHBASIN UNIT used on 001F SEE 25-41-51-16B FOR DET	NP		001
-120F	D2549020601475		. . DOOR ASSY-WASHBASIN UNIT used on 001K SEE 25-41-51-160 FOR DET	NP		001
-120G	D2549010500475		. . DOOR ASSY-WASHBASIN UNIT used on 001L, 001M SEE 25-41-51-160 FOR DET	NP		001
-120H	D2549010502275		. . DOOR ASSY-WASHBASIN UNIT used on 001N SEE 25-41-51-160 FOR DET	NP		001
130A	D2549010509476		. . PANEL ASSY-WASHBASIN UNIT used on 001A SEE 25-41-51-17C FOR DET	NP		001
-130B	D2549030504676		. . PANEL ASSY-WASHBASIN UNIT used on 001B, 001D SEE 25-41-51-17C FOR DET	NP		001
-130C	D2549030504876		. . PANEL ASSY-WASHBASIN UNIT used on 001C, 001E, 001J SEE 25-41-51-17C FOR DET	NP		001

- ITEM NOT ILLUSTRATED

FIG. ITEM	PART NUMBER	AIRLINE STOCK NUMBER	NOMENCLATURE 1234567	EFF CODE	UNITS PER ASSY
-130D	D2549020506276		. . PANEL ASSY-WASHBASIN UNIT NP used on 001G, 001P SEE 25-41-51-17C FOR DET		001
-130E	D2549010511476		. . PANEL ASSY-WASHBASIN UNIT NP used on 001F SEE 25-41-51-17C FOR DET		001
-130F	D2549010510876		. . PANEL ASSY-WASHBASIN UNIT NP used on 001H SEE 25-41-51-17C FOR DET		001
-130G	D2549020601676		. . PANEL ASSY-WASHBASIN UNIT NP used on 001K SEE 25-41-51-17A FOR DET		001
-130H	D2549010500476		. . PANEL ASSY-WASHBASIN UNIT NP used on 001L, 001M SEE 25-41-51-17A FOR DET		001
-130J	D2549010502276		. . PANEL ASSY-WASHBASIN UNIT NP used on 001N SEE 25-41-51-17A FOR DET		001
140A	D2549030504877		. . BIN-WASTE,CHUTE-WASTE AND EXTINGUISHER-FIRE NP used on 001A, 001B, 001C, 001D, 001E, 001F, 001G, 001H, 001J, 001P SEE 25-41-51-180 FOR DET		001
-140B	D2549020600477		. . BIN-WASTE,CHUTE-WASTE AND EXTINGUISHER-FIRE NP used on 001K SEE 25-41-51-180 FOR DET		001

- ITEM NOT ILLUSTRATED

FIG. ITEM	PART NUMBER	AIRLINE STOCK NUMBER	NOMENCLATURE 1234567		EFF CODE	UNITS PER ASSY
-140C	D2549010500077		. . BIN-WASTE,CHUTE-WASTE AND EXTINGUISHER-FIRE used on 001L, 001M, 001N SEE 25-41-51-180 FOR DET	NP		001
150A	D2549030505678		. . CABINET-SERVICE used on 001A SEE 25-41-51-19E FOR DET	NP		001
-150B	D2549030504678		. . CABINET-SERVICE used on 001B, 001D SEE 25-41-51-19E FOR DET	NP		001
-150C	D2549030504078		. . CABINET-SERVICE used on 001C, 001J SEE 25-41-51-19E FOR DET	NP		001
-150D	D2549020605678		. . CABINET-SERVICE used on 001G, 001P SEE 25-41-51-19E FOR DET	NP		001
-150E	D2549030504878		. . CABINET-SERVICE used on 001E, 001H SEE 25-41-51-19E FOR DET	NP		001
-150F	D2549010511478		. . CABINET-SERVICE used on 001F SEE 25-41-51-19E FOR DET	NP		001
-150G	D2549020600078		. . CABINET-SERVICE used on 001K SEE 25-41-51-19B FOR DET	NP		001
-150H	D2549010501078		. . CABINET-SERVICE used on 001L, 001M SEE 25-41-51-19C FOR DET	NP		001
-150J	D2549010504278		. . CABINET-SERVICE used on 001N SEE 25-41-51-19B FOR DET	NP		001

- ITEM NOT ILLUSTRATED

FIG. ITEM	PART NUMBER	AIRLINE STOCK NUMBER	NOMENCLATURE 1234567	EFF CODE	UNITS PER ASSY
160A	D2549030505679		. . TABLE-NURSING NP used on 001A SEE 25-41-51-200 FOR DET		001
-160B	D2549010500079		. . TABLE-NURSING NP used on 001B, 001D SEE 25-41-51-200 FOR DET		001
-160C	D2549010500479		. . TABLE-NURSING NP used on 001C, 001E, 001F, 001H, 001J, 001K, 001N SEE 25-41-51-200 FOR DET		001
-160D	D2549020613679		. . TABLE-NURSING NP used on 001G, 001P SEE 25-41-51-20A FOR DET		001
-160E	D2549010512679		. . TABLE-NURSING NP used on 001L, 001M SEE 25-41-51-20A FOR DET		001
170A	D2549030505680		. . VENTILATION SYSTEM NP used on 001A SEE 25-41-51-210 FOR DET		001
-170B	D2549030504880		. . VENTILATION SYSTEM NP used on 001B, 001C, 001D, 001E, 001F, 001H, 001J SEE 25-41-51-210 FOR DET		001
-170C	D2549020506280		. . VENTILATION SYSTEM NP used on 001G, 001P SEE 25-41-51-210 FOR DET		001
-170D	D2549010500080		. . VENTILATION SYSTEM NP used on 001K, 001L, 001M, 001N SEE 25-41-51-210 FOR DET		001

- ITEM NOT ILLUSTRATED

FIG. ITEM	PART NUMBER	AIRLINE STOCK NUMBER	NOMENCLATURE 1234567		EFF CODE	UNITS PER ASSY
180A	D2549030504881		. . WATER SYSTEM-POTABLE used on 001A, 001B, 001C, 001D, 001E, 001F, 001H, 001J SEE 25-41-51-22D FOR DET	NP		001
-180B	D2549030504081		. . WATER SYSTEM-POTABLE used on 001G, 001P SEE 25-41-51-22G FOR DET	NP		001
-180C	D2549010506881		. . WATER SYSTEM-POTABLE used on 001K SEE 25-41-51-220 FOR DET	NP		001
-180D	D2549010501881		. . WATER SYSTEM-POTABLE used on 001L, 001M, 001N SEE 25-41-51-220 FOR DET	NP		001
190A	D2549010511082		. . WATER SYSTEM-WASTE used on 001A, 001B, 001C, 001D, 001E, 001F, 001H, 001J SEE 25-41-51-23B FOR DET	NP		001
-190B	D2549020605682		. . WATER SYSTEM-WASTE used on 001G, 001P SEE 25-41-51-23B FOR DET	NP		001
-190C	D2549010506882		. . WATER SYSTEM-WASTE used on 001K SEE 25-41-51-23C FOR DET	NP		001
-190D	D2549030500282		. . WATER SYSTEM-WASTE used on 001L, 001M, 001N SEE 25-41-51-230 FOR DET	NP		001
200A	D2549030504883		. . ELECTRICAL SYSTEM used on 001A, 001B, 001C, 001D, 001E, 001F, 001H, 001J SEE 25-41-51-26C FOR DET	NP		001

- ITEM NOT ILLUSTRATED

FIG. ITEM	PART NUMBER	AIRLINE STOCK NUMBER	NOMENCLATURE 1234567		EFF CODE	UNITS PER ASSY
-200B	D2549020600483		. . ELECTRICAL SYSTEM used on 001K SEE 25-41-51-260 FOR DET	NP		001
-200C	D2549030500483		. . ELECTRICAL SYSTEM used on 001L, 001M, 001N SEE 25-41-51-260 FOR DET	NP		001
-200D	D2549020605683		. . ELECTRICAL SYSTEM used on 001G, 001P SEE 25-41-51-26C FOR DET	NP		001

- ITEM NOT ILLUSTRATED

THIS PAGE IS INTENTIONALLY LEFT BLANK

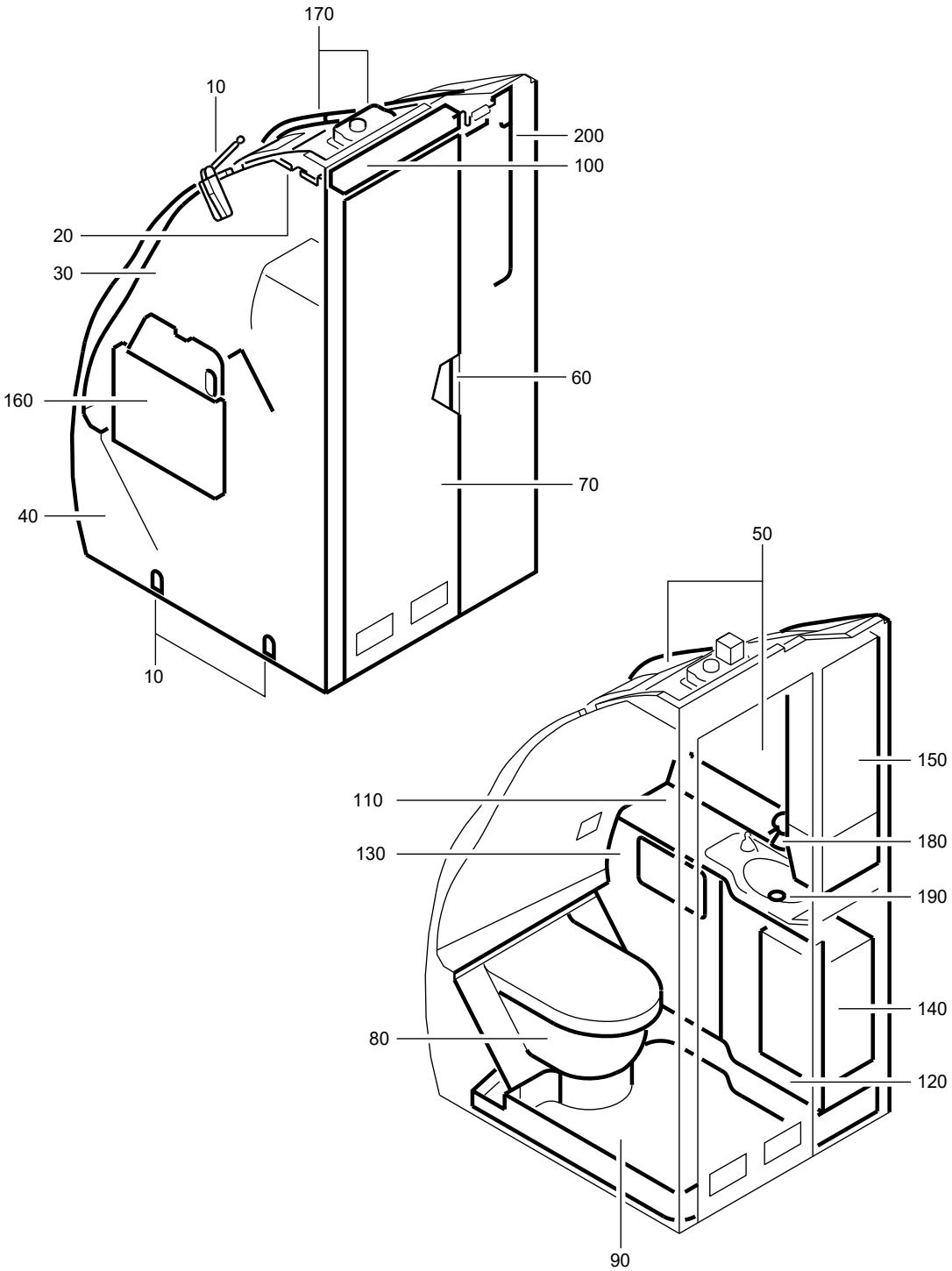

F_PL_254151_01_L_01_00

LAVATORY A ASSY
Figure 01L/EN254151SHEET01L01

FIG. ITEM	PART NUMBER	AIRLINE STOCK NUMBER	NOMENCLATURE 1234567	EFF CODE	UNITS PER ASSY
01L					
-001A	D2549010510200		. LAVATORY A ASSY PRE VSB A2-254-25-078 SEE SIL 25-117 FOR DET		RF
-001B	D2549010512600		. LAVATORY A ASSY SEE SIL 25-117 FOR DET		RF
-001C	D2549020607600		. LAVATORY A ASSY SEE SIL 25-117 FOR DET		RF
-001D	D2549020609000		. LAVATORY A ASSY SEE SIL 25-117 FOR DET		RF
-001E	D2549030506200		. LAVATORY A ASSY SEE SIL 25-117 FOR DET		RF
-001F	D2549020605800		. LAVATORY A ASSY POST SB 25-1640 SEE SIL 25-117 FOR DET		RF
-001G	D2549020609400		. LAVATORY A ASSY SEE SIL 25-117 FOR DET		RF
-001H	D2549020606000		. LAVATORY A ASSY SEE SIL 25-117 FOR DET		RF
-001J	D2549020608800		. LAVATORY A ASSY VSB A2-254-25-032 SEE SIL 25-117 FOR DET		RF
-001K	D2549020611200		. LAVATORY A ASSY SEE SIL 25-117 FOR DET		RF
-001L	D2549010513400		. LAVATORY A ASSY SEE SIL 25-117 FOR DET		RF

- ITEM NOT ILLUSTRATED

FIG. ITEM	PART NUMBER	AIRLINE STOCK NUMBER	NOMENCLATURE 1234567	EFF CODE	UNITS PER ASSY
-001M	D2549020603200		. LAVATORY A ASSY POST SB 25-1289 VSB A2-254-25-013 VSB A2-254-25-032 SEE SIL 25-117 FOR DET		RF
-001N	D2549020601200		. LAVATORY A ASSY POST SB 25-1314 SEE SIL 25-117 FOR DET		RF
-001P	D2549020605800		. LAVATORY A ASSY SEE SIL 25-117 FOR DET		RF
-001Q	R225401107-004		. LAVATORY A ASSY POST VSB A2-254-25-078		RF
010A	D2549020602661		. . ATTACHMENT-LAVATORY NP used on 001C, 001D, 001E, 001G, 001K, 001L SEE 25-41-51-020 FOR DET		001
-010B	D2549020705861		. . ATTACHMENT-LAVATORY NP POST SB 25-1312 used on 001H SEE 25-41-51-02D FOR DET		001
-010C	D2549020610061		. . ATTACHMENT-LAVATORY NP used on 001A, 001B, 001F, 001Q SEE 25-41-51-02D FOR DET		001
-010D	D2549010610061		. . ATTACHMENT-LAVATORY NP POST SB 25-1289 used on 001J, 001M SEE 25-41-51-02D FOR DET		001
-010E	D2549020601261		. . ATTACHMENT-LAVATORY NP used on 001N SEE 25-41-51-02C FOR DET		001

- ITEM NOT ILLUSTRATED

FIG. ITEM	PART NUMBER	AIRLINE STOCK NUMBER	NOMENCLATURE 1234567		EFF CODE	UNITS PER ASSY
-010F	D2547160007461		. . ATTACHMENT-LAVTORYY POST SB 25-1640 used on 001P SEE 25-41-51-02D FOR DET	NP		001
020A	D2549020602663		. . PANEL-CEILING used on 001A, 001B, 001C, 001D, 001E, 001F, 001G, 001H, 001J, 001K, 001L, 001M, 001Q SEE 25-41-51-040 FOR DET	NP		001
-020B	D2549010500063		. . PANEL-CEILING used on 001N SEE 25-41-51-040 FOR DET	NP		001
-020C	D2549030401463		. . PANEL-CEILING used on 001P SEE 25-41-51-040 FOR DET	NP		001
030A	D2549010501064		. . WALL-REAR used on 001A, 001B, 001Q SEE 25-41-51-05A FOR DET	NP		001
-030B	D2549010510064		. . WALL-REAR used on 001C, 001D, 001E, 001F, 001H, 001K, 001P SEE 25-41-51-05B FOR DET	NP		001
-030C	D2549030505264		. . WALL-REAR used on 001G, 001L SEE 25-41-51-050 FOR DET	NP		001
-030D	D2549020611664		. . WALL-REAR POST SB 25-1289 used on 001J, 001M SEE 25-41-51-05A FOR DET	NP		001
-030E	D2549020601264		. . WALL-REAR used on 001N SEE 25-41-51-05A FOR DET	NP		001

- ITEM NOT ILLUSTRATED

FIG. ITEM	PART NUMBER	AIRLINE STOCK NUMBER	NOMENCLATURE 1234567	EFF CODE	UNITS PER ASSY
040A	D2549010502065		. . WALL-SIDE NP used on 001B SEE 25-41-51-48E FOR DET		001
-040B	D2549020608865		. . WALL-SIDE NP POST SB 25-1289 PRE VSB A2-254-25-032 used on 001J SEE 25-41-51-48E FOR DET		001
-040C	D2549020611265		. . WALL-SIDE NP used on 001K SEE 25-41-51-06H FOR DET		001
-040D	D2549020609065		. . WALL-SIDE NP used on 001C, 001D SEE 25-41-51-06G FOR DET		001
-040E	D2549030506265		. . WALL-SIDE NP used on 001E SEE 25-41-51-06G FOR DET		001
-040F	D2549020605865		. . WALL-SIDE NP used on 001F SEE 25-41-51-06G FOR DET		001
-040G	D2549010513465		. . WALL-SIDE NP used on 001G, 001L SEE 25-41-51-06H FOR DET		001
-040H	D2549020606065		. . WALL-SIDE NP used on 001H SEE 25-41-51-06H FOR DET		001
-040J	D2549010510265		. . WALL-SIDE NP used on 001A, 001Q SEE 25-41-51-06B FOR DET		001
-040K	D2549020603265		. . WALL-SIDE NP used on 001M SEE 25-41-51-48E FOR DET		001

- ITEM NOT ILLUSTRATED

FIG. ITEM	PART NUMBER	AIRLINE STOCK NUMBER	NOMENCLATURE 1234567		EFF CODE	UNITS PER ASSY
-040L	D2549020601265		. . WALL-SIDE used on 001N SEE 25-41-51-48E FOR DET	NP		001
-040M	F2547160007465		. . WALL-SIDE used on 001P SEE 25-41-51-06E FOR DET	NP		001
-040N	D2549020608865		. . WALL-SIDE POST VSB A2-254-25-032 used on 001J SEE 25-41-51-48E FOR DET	NP		001
050A	D2549010501066		. . HOUSING used on 001B SEE 25-41-51-07Y FOR DET	NP		001
-050B	D2549020607666		. . HOUSING used on 001C, 001D SEE 25-41-51-07D FOR DET	NP		001
-050C	D2549030506266		. . HOUSING used on 001E SEE 25-41-51-07E FOR DET	NP		001
-050D	D2549020605866		. . HOUSING used on 001F SEE 25-41-51-07E FOR DET	NP		001
-050E	D2549010511466		. . HOUSING used on 001G, 001L SEE 25-41-51-07C FOR DET	NP		001
-050F	D2549020706466		. . HOUSING used on 001H, 001J SEE 25-41-51-49C FOR DET	NP		001
-050G	D2549020604266		. . HOUSING used on 001K SEE 25-41-51-07D FOR DET	NP		001

- ITEM NOT ILLUSTRATED

FIG. ITEM	PART NUMBER	AIRLINE STOCK NUMBER	NOMENCLATURE 1234567	EFF CODE	UNITS PER ASSY
-050H	D2549020603266		. . HOUSING NP PRE VSB A2-254-25-032 used on 001M SEE 25-41-51-07Y FOR DET		001
-050J	D2549010500066		. . HOUSING NP used on 001N SEE 25-41-51-07B FOR DET		001
-050K	D2549010501066		. . HOUSING NP POST SB 25-1314 used on 001A, 001Q SEE 25-41-51-07Y FOR DET		001
-050L	D2547160007066		. . HOUSING NP POST SB 25-1640 used on 001P SEE 25-41-51-07E FOR DET		001
-050M	D2549020603266		. . HOUSING NP POST VSB A2-254-25-032 used on 001M SEE 25-41-51-07Y FOR DET		001
060A	D2549010500069		. . DOOR INSTL NP used on 001B, 001C, 001D, 001E, 001F, 001G, 001K, 001L, 001P SEE 25-41-51-100 FOR DET		001
-060B	D2549020401269		. . DOOR INSTL NP used on 001A, 001H, 001J, 001M, 001N, 001Q SEE 25-41-51-10A FOR DET		001
070A	A2254002768512		. . DOOR ASSY-SINGLE used on 001A, 001Q SEE 25-41-51-11C FOR DET		001

- ITEM NOT ILLUSTRATED

FIG. ITEM	PART NUMBER	AIRLINE STOCK NUMBER	NOMENCLATURE 1234567	EFF CODE	UNITS PER ASSY
-070B	A225400276-906		. . DOOR ASSY-SINGLE used on 001C, 001D SEE 25-41-51-11C FOR DET		001
-070C	A225400276-548		. . DOOR ASSY-SINGLE used on 001E SEE 25-41-51-11C FOR DET		001
-070D	A225400276-538		. . DOOR ASSY-SINGLE used on 001F, 001P SEE 25-41-51-11C FOR DET		001
-070E	A225400276-502		. . DOOR ASSY-SINGLE used on 001K SEE 25-41-51-11B FOR DET		001
-070F	A2254002768508		. . DOOR ASSY-SINGLE PRE VSB A2-254-25-032 used on 001H, 001J SEE 25-41-51-11N FOR DET		001
-070G	A225400276-544		. . DOOR ASSY-SINGLE used on 001G, 001L SEE 25-41-51-11C FOR DET		001
-070H	A225400276-592		. . DOOR ASSY-SINGLE used on 001B SEE 25-41-51-11E FOR DET		001
-070J	A2254002708508		. . DOOR ASSY-SINGLE PRE VSB A2-254-25-032 used on 001M SEE 25-41-51-11Q FOR DET		001
-070K	A2254002708526		. . DOOR ASSY-SINGLE used on 001N SEE 25-41-51-11Q FOR DET		001

- ITEM NOT ILLUSTRATED

FIG. ITEM	PART NUMBER	AIRLINE STOCK NUMBER	NOMENCLATURE 1234567		EFF CODE	UNITS PER ASSY
-070L	A2254002708508		. . DOOR ASSY-SINGLE POST VSB A2-254-25-032 used on 001M SEE 25-41-51-11Q FOR DET			001
-070M	A2254002768508		. . DOOR ASSY-SINGLE POST VSB A2-254-25-032 used on 001J SEE 25-41-51-11N FOR DET			001
080A	D2549010510271		. . TOILET UNIT AND TOILET SHROUD used on 001A, 001B, 001Q SEE 25-41-51-12C FOR DET	NP		001
-080B	D2549020607671		. . TOILET UNIT AND TOILET SHROUD used on 001C, 001D SEE 25-41-51-12C FOR DET	NP		001
-080C	D2549030506271		. . TOILET UNIT AND TOILET SHROUD used on 001E SEE 25-41-51-12C FOR DET	NP		001
-080D	D2549020604271		. . TOILET UNIT AND TOILET SHROUD used on 001F, 001H, 001J, 001K, 001P SEE 25-41-51-12C FOR DET	NP		001
-080E	D2549010511471		. . TOILET UNIT AND TOILET SHROUD used on 001G, 001L SEE 25-41-51-12C FOR DET	NP		001
-080F	D2549010507471		. . TOILET UNIT AND TOILET SHROUD used on 001M SEE 25-41-51-12A FOR DET	NP		001

- ITEM NOT ILLUSTRATED

FIG. ITEM	PART NUMBER	AIRLINE STOCK NUMBER	NOMENCLATURE 1234567		EFF CODE	UNITS PER ASSY
-080G	D2549020601271		. . TOILET UNIT AND TOILET SHROUD used on 001N SEE 25-41-51-12A FOR DET	NP		001
090A	D2549010502072		. . PAN-FLOOR used on 001B SEE 25-41-51-130 FOR DET	NP		001
-090B	D2549020604872		. . PAN-FLOOR used on 001C, 001D SEE 25-41-51-13C FOR DET	NP		001
-090C	D2549030506272		. . PAN-FLOOR used on 001E SEE 25-41-51-13B FOR DET	NP		001
-090D	D2549030504672		. . PAN-FLOOR used on 001F, 001P SEE 25-41-51-13B FOR DET	NP		001
-090E	D2549030504072		. . PAN-FLOOR used on 001G, 001K, 001L SEE 25-41-51-13B FOR DET	NP		001
-090F	D2549010514272		. . PAN-FLOOR POST SB 25-1314 used on 001A, 001H, 001J, 001Q SEE 25-41-51-13T FOR DET	NP		001
-090G	D2549010504472		. . PAN-FLOOR used on 001M SEE 25-41-51-13B FOR DET	NP		001
-090H	D2549020603272		. . PAN-FLOOR used on 001N SEE 25-41-51-13U FOR DET	NP		001

- ITEM NOT ILLUSTRATED

FIG. ITEM	PART NUMBER	AIRLINE STOCK NUMBER	NOMENCLATURE 1234567		EFF CODE	UNITS PER ASSY
100A	D2549020602673		. . LIGHT-DOOR used on 001A, 001C, 001D, 001E, 001F, 001G, 001H, 001J, 001K, 001L, 001M, 001Q SEE 25-41-51-140 FOR DET	NP		001
-100B	D2549010512673		. . LIGHT-DOOR used on 001B SEE 25-41-51-140 FOR DET	NP		001
-100C	D2549010500073		. . LIGHT-DOOR used on 001N SEE 25-41-51-140 FOR DET	NP		001
-100D	D2547160007473		. . LIGHT-DOOR POST SB 25-1640 used on 001P SEE 25-41-51-14A FOR DET	NP		001
110A	D2549010511074		. . WASHBASIN UNIT used on 001A, 001C, 001D, 001K, 001Q SEE 25-41-51-15C FOR DET	NP		001
-110B	D2549010511474		. . WASHBASIN UNIT used on 001E, 001G, 001L SEE 25-41-51-15C FOR DET	NP		001
-110C	D2549020605874		. . WASHBASIN UNIT used on 001F, 001P SEE 25-41-51-15C FOR DET	NP		001
-110D	D2549010510674		. . WASHBASIN UNIT used on 001B SEE 25-41-51-15F FOR DET	NP		001
-110E	D2549030504874		. . WASHBASIN UNIT used on 001H, 001J SEE 25-41-51-15C FOR DET	NP		001

- ITEM NOT ILLUSTRATED

FIG. ITEM	PART NUMBER	AIRLINE STOCK NUMBER	NOMENCLATURE 1234567		EFF CODE	UNITS PER ASSY
-110F	D2549030502674		. . WASHBASIN UNIT PRE VSB A2-254-25-013 PRE VSB A2-254-25-032 used on 001M SEE 25-41-51-150 FOR DET	NP		001
-110G	D2549020500274		. . WASHBASIN UNIT used on 001N SEE 25-41-51-150 FOR DET	NP		001
-110H	D2549030502674		. . WASHBASIN UNIT POST VSB A2-254-25-013 used on 001M SEE 25-41-51-150 FOR DET	NP		001
-110J	D2549030502674		. . WASHBASIN UNIT POST VSB A2-254-25-032 used on 001M SEE 25-41-51-150 FOR DET	NP		001
120A	D2549010509475		. . DOOR ASSY-WASHBASIN UNIT used on 001A, 001B, 001Q SEE 25-41-51-16B FOR DET	NP		001
-120B	D2549020607675		. . DOOR ASSY-WASHBASIN UNIT used on 001C, 001D SEE 25-41-51-16C FOR DET	NP		001
-120C	D2549030506275		. . DOOR ASSY-WASHBASIN UNIT used on 001E SEE 25-41-51-16C FOR DET	NP		001
-120D	D2549020607075		. . DOOR ASSY-WASHBASIN UNIT used on 001F, 001H, 001J, 001K, 001P SEE 25-41-51-16B FOR DET	NP		001

- ITEM NOT ILLUSTRATED

FIG. ITEM	PART NUMBER	AIRLINE STOCK NUMBER	NOMENCLATURE 1234567		EFF CODE	UNITS PER ASSY
-120E	D2549010511475		. . DOOR ASSY-WASHBASIN UNIT used on 001G, 001L SEE 25-41-51-16B FOR DET	NP		001
-120F	D2549020603075		. . DOOR ASSY-WASHBASIN UNIT PRE VSB A2-254-25-032 used on 001M SEE 25-41-51-16A FOR DET	NP		001
-120G	D2549020601275		. . DOOR ASSY-WASHBASIN UNIT used on 001N SEE 25-41-51-160 FOR DET	NP		001
-120H	D2549020603075		. . DOOR ASSY-WASHBASIN UNIT POST VSB A2-254-25-032 used on 001M SEE 25-41-51-16A FOR DET	NP		001
130A	D2549010509476		. . PANEL ASSY-WASHBASIN UNIT used on 001A, 001B, 001Q SEE 25-41-51-17C FOR DET	NP		001
-130B	D2549020607676		. . PANEL ASSY-WASHBASIN UNIT used on 001C, 001D SEE 25-41-51-17C FOR DET	NP		001
-130C	D2549030506276		. . PANEL ASSY-WASHBASIN UNIT used on 001E SEE 25-41-51-17C FOR DET	NP		001

- ITEM NOT ILLUSTRATED

FIG. ITEM	PART NUMBER	AIRLINE STOCK NUMBER	NOMENCLATURE 1234567		EFF CODE	UNITS PER ASSY
-130D	D2549030504876		. . PANEL ASSY-WASHBASIN UNIT used on 001F, 001H, 001J, 001K, 001P SEE 25-41-51-17C FOR DET	NP		001
-130E	D2549010511476		. . PANEL ASSY-WASHBASIN UNIT used on 001G, 001L SEE 25-41-51-17C FOR DET	NP		001
-130F	D2549020603076		. . PANEL ASSY-WASHBASIN UNIT PRE VSB A2-254-25-013 PRE VSB A2-254-25-032 used on 001M SEE 25-41-51-17A FOR DET	NP		001
-130G	D2549020601276		. . PANEL ASSY-WASHBASIN UNIT used on 001N SEE 25-41-51-17A FOR DET	NP		001
-130H	D2549020603076		. . PANEL ASSY-WASHBASIN UNIT POST VSB A2-254-25-013 used on 001M SEE 25-41-51-17A FOR DET	NP		001
-130J	D2549020603076		. . PANEL ASSY-WASHBASIN UNIT POST VSB A2-254-25-013 used on 001M SEE 25-41-51-17A FOR DET	NP		001
140A	D2549030504877		. . BIN-WASTE,CHUTE-WASTE AND EXTINGUISHER-FIRE used on 001A, 001B, 001C, 001D, 001E, 001F, 001G, 001H, 001J, 001K, 001L, 001P, 001Q SEE 25-41-51-180 FOR DET	NP		001

- ITEM NOT ILLUSTRATED

FIG. ITEM	PART NUMBER	AIRLINE STOCK NUMBER	NOMENCLATURE 1234567		EFF CODE	UNITS PER ASSY
-140B	D2549020602677		. . BIN-WASTE,CHUTE-WASTE AND EXTINGUISHER-FIRE PRE VSB A2-254-25-013 PRE VSB A2-254-25-032 used on 001M SEE 25-41-51-180 FOR DET	NP		001
-140C	D2549010500077		. . BIN-WASTE,CHUTE-WASTE AND EXTINGUISHER-FIRE used on 001N SEE 25-41-51-180 FOR DET	NP		001
-140D	D2549020602677		. . BIN-WASTE,CHUTE-WASTE AND EXTINGUISHER-FIRE POST VSB A2-254-25-013 POST VSB A2-254-25-032 used on 001M SEE 25-41-51-180 FOR DET	NP		001
150A	D2549010510278		. . CABINET-SERVICE used on 001A, 001B, 001Q SEE 25-41-51-19F FOR DET	NP		001
-150B	D2549030504878		. . CABINET-SERVICE PRE VSB A2-254-25-032 used on 001C, 001D, 001E, 001H, 001J, 001K SEE 25-41-51-19E FOR DET	NP		001
-150C	D2549020605878		. . CABINET-SERVICE used on 001F, 001P SEE 25-41-51-19F FOR DET	NP		001
-150D	D2549010513478		. . CABINET-SERVICE used on 001G, 001L SEE 25-41-51-19F FOR DET	NP		001

- ITEM NOT ILLUSTRATED

FIG. ITEM	PART NUMBER	AIRLINE STOCK NUMBER	NOMENCLATURE 1234567		EFF CODE	UNITS PER ASSY
-150E	D2549030503478		. . CABINET-SERVICE PRE VSB A2-254-25-013 PRE VSB A2-254-25-032 used on 001M SEE 25-41-51-19B FOR DET	NP		001
-150F	D2549020503678		. . CABINET-SERVICE used on 001N SEE 25-41-51-19B FOR DET	NP		001
-150G	D2549030503478		. . CABINET-SERVICE POST VSB A2-254-25-013 used on 001M SEE 25-41-51-19B FOR DET	NP		001
-150H	D2549030503478		. . CABINET-SERVICE POST VSB A2-254-25-032 used on 001M SEE 25-41-51-19B FOR DET	NP		001
-150J	D2549030504878		. . CABINET-SERVICE POST VSB A2-254-25-032 used on 001J SEE 25-41-51-19E FOR DET	NP		001
160A	D2549010500479		. . TABLE-NURSING PRE VSB A2-254-25-032 used on 001C, 001D, 001E, 001F, 001G, 001H, 001J, 001K, 001L, 001M, 001N, 001P SEE 25-41-51-200 FOR DET	NP		001
-160B	D2549010512679		. . TABLE-NURSING used on 001A, 001B, 001Q SEE 25-41-51-20A FOR DET	NP		001
-160C	D2549010500479		. . TABLE-NURSING POST VSB A2-254-25-032 used on 001M SEE 25-41-51-20A FOR DET	NP		001

- ITEM NOT ILLUSTRATED

FIG. ITEM	PART NUMBER	AIRLINE STOCK NUMBER	NOMENCLATURE 1234567		EFF CODE	UNITS PER ASSY
170A	D2549030504880		. . VENTILATION SYSTEM used on 001A, 001C, 001D, 001E, 001F, 001G, 001H, 001J, 001K, 001L, 001P, 001Q SEE 25-41-51-210 FOR DET	NP		001
-170B	D2549010514280		. . VENTILATION SYSTEM used on 001B SEE 25-41-51-21A FOR DET	NP		001
-170C	D2549010500080		. . VENTILATION SYSTEM used on 001M, 001N SEE 25-41-51-210 FOR DET	NP		001
180A	D2549030504881		. . WATER SYSTEM-POTABLE used on 001A, 001B, 001C, 001D, 001E, 001F, 001G, 001H, 001J, 001K, 001L, 001P, 001Q SEE 25-41-51-22D FOR DET	NP		001
-180B	D2549010501881		. . WATER SYSTEM-POTABLE PRE VSB A2-254-25-032 used on 001M, 001N SEE 25-41-51-220 FOR DET	NP		001
-180C	D2549010501881		. . WATER SYSTEM-POTABLE POST VSB A2-254-25-032 used on 001M SEE 25-41-51-220 FOR DET	NP		001
190A	D2549010511082		. . WATER SYSTEM-WASTE used on 001A, 001B, 001C, 001D, 001E, 001G, 001K, 001L, 001Q SEE 25-41-51-23B FOR DET	NP		001
-190B	D2549030504882		. . WATER SYSTEM-WASTE used on 001F, 001H, 001J, 001P SEE 25-41-51-23B FOR DET	NP		001

- ITEM NOT ILLUSTRATED

FIG. ITEM	PART NUMBER	AIRLINE STOCK NUMBER	NOMENCLATURE 1234567		EFF CODE	UNITS PER ASSY
-190C	D2549010505682		. . WATER SYSTEM-WASTE PRE VSB A2-254-25-032 used on 001M SEE 25-41-51-230 FOR DET	NP		001
-190D	D2549030500282		. . WATER SYSTEM-WASTE used on 001N SEE 25-41-51-230 FOR DET	NP		001
-190E	D2549010505682		. . WATER SYSTEM-WASTE POST VSB A2-254-25-032 used on 001M SEE 25-41-51-230 FOR DET	NP		001
200A	D2549030504883		. . ELECTRICAL SYSTEM used on 001A, 001B, 001C, 001D, 001E, 001F, 001G, 001H, 001J, 001K, 001L, 001Q SEE 25-41-51-26C FOR DET	NP		001
-200B	D2549030500483		. . ELECTRICAL SYSTEM PRE VSB A2-254-25-032 used on 001M, 001N SEE 25-41-51-260 FOR DET	NP		001
-200C	F2547160007483		. . ELECTRICAL SYSTEM used on 001P SEE 25-41-51-26Q FOR DET	NP		001
-200D	D2549030500483		. . ELECTRICAL SYSTEM POST VSB A2-254-25-032 used on 001M SEE 25-41-51-260 FOR DET	NP		001

- ITEM NOT ILLUSTRATED

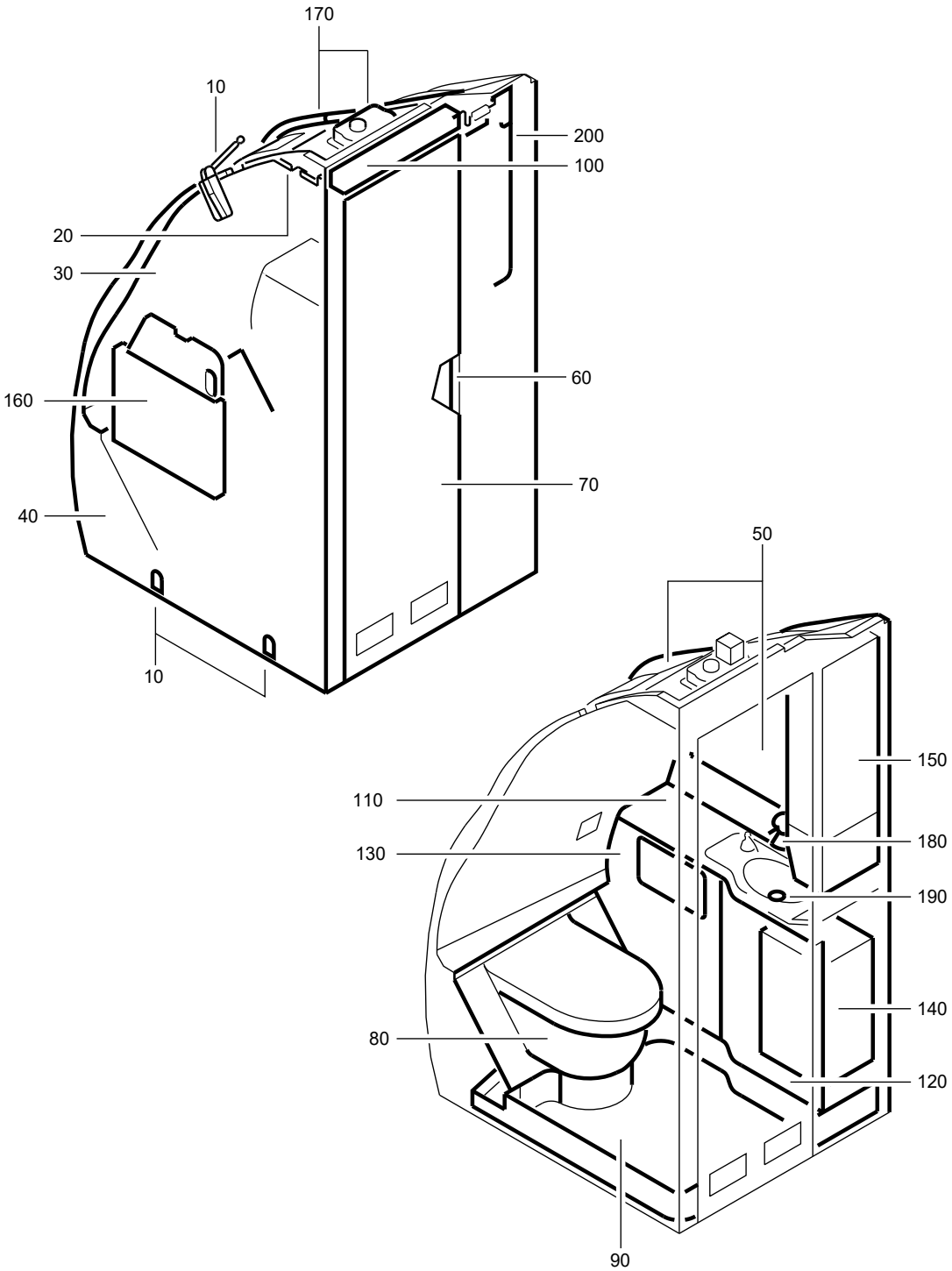

F_PL_254151_01_M_01_00

LAVATORY A ASSY
Figure 01M/EN254151SHEET01M01

FIG. ITEM	PART NUMBER	AIRLINE STOCK NUMBER	NOMENCLATURE 1234567	EFF CODE	UNITS PER ASSY
01M					
-001A	D2549020605000		. LAVATORY A ASSY PRE VSB A2-254-25-057 SEE SIL 25-117 FOR DET		RF
-001B	D2549020608400		. LAVATORY A ASSY SEE SIL 25-117 FOR DET		RF
-001C	D2549020607400		. LAVATORY A ASSY SEE SIL 25-117 FOR DET		RF
-001D	D2549020604800		. LAVATORY A ASSY SEE SIL 25-117 FOR DET		RF
-001E	D2549020606800		. LAVATORY A ASSY SEE SIL 25-117 FOR DET		RF
-001F	D2549020609600		. LAVATORY A ASSY SEE SIL 25-117 FOR DET		RF
-001G	D2549020701200		. LAVATORY A ASSY SEE SIL 25-117 FOR DET		RF
-001H	D2549010511600		. LAVATORY A ASSY SEE SIL 25-117 FOR DET		RF
-001J	D2549030507000		. LAVATORY A ASSY PRE VSB A2-254-25-080 SEE SIL 25-117 FOR DET		RF
-001K	D2549020608600		. LAVATORY A ASSY SEE SIL 25-117 FOR DET		RF
-001L	D2549020610000		. LAVATORY A ASSY SEE SIL 25-117 FOR DET		RF
-001M	D2549020608200		. LAVATORY A ASSY PRE VSB A2-254-25-046 SEE SIL 25-117 FOR DET		RF

- ITEM NOT ILLUSTRATED

FIG. ITEM	PART NUMBER	AIRLINE STOCK NUMBER	NOMENCLATURE 1234567		EFF CODE	UNITS PER ASSY
-001N	D2549020601600		. LAVATORY A ASSY POST SB 25-1289 SEE SIL 25-117 FOR DET			RF
-001P	D2549020606800		. LAVATORY A ASSY SEE SIL 25-117 FOR DET			RF
-001Q	D2549020610000		. LAVATORY A ASSY			RF
-001R	R225401172-002		. LAVATORY A ASSY POST VSB A2-254-25-080 SEE SIL 25-117 FOR DET			RF
-001S	R225401134-004		. LAVATORY A ASSY POST VSB A2-254-25-046			RF
-001T	R225401136-016		. LAVATORY A ASSY POST VSB A2-254-25-057			RF
010A	D2549020602661		. . ATTACHMENT-LAVATORY used on 001A, 001B, 001C, 001D, 001E, 001F, 001G, 001H, 001J, 001K, 001R, 001T SEE 25-41-51-020 FOR DET	NP		001
-010B	D2549020602861		. . ATTACHMENT-LAVATORY used on 001M, 001S SEE 25-41-51-020 FOR DET	NP		001
-010C	D2549020610061		. . ATTACHMENT-LAVATORY used on 001L, 001Q SEE 25-41-51-02D FOR DET	NP		001
-010D	D2549010500061		. . ATTACHMENT-LAVATORY used on 001N SEE 25-41-51-020 FOR DET	NP		001
-010E	D2549020602661		. . ATTACHMENT-LAVATORY used on 001P SEE 25-41-51-020 FOR DET	NP		001

- ITEM NOT ILLUSTRATED

FIG. ITEM	PART NUMBER	AIRLINE STOCK NUMBER	NOMENCLATURE 1234567		EFF CODE	UNITS PER ASSY
020A	D2549020602663		. . PANEL-CEILING used on 001A, 001B, 001C, 001D, 001E, 001F, 001G, 001H, 001J, 001K, 001L, 001P, 001Q, 001R, 001T SEE 25-41-51-040 FOR DET	NP		001
-020B	D2549020602863		. . PANEL-CEILING used on 001M, 001S SEE 25-41-51-040 FOR DET	NP		001
-020C	D2549010500063		. . PANEL-CEILING used on 001N SEE 25-41-51-040 FOR DET	NP		001
030A	D2549030505264		. . WALL-REAR used on 001C, 001J, 001R SEE 25-41-51-050 FOR DET	NP		001
-030B	D2549010509864		. . WALL-REAR used on 001D, 001E, 001F, 001G SEE 25-41-51-05B FOR DET	NP		001
-030C	D2549010510064		. . WALL-REAR used on 001H, 001K SEE 25-41-51-05B FOR DET	NP		001
-030D	D2549020608264		. . WALL-REAR used on 001M, 001S SEE 25-41-51-05C FOR DET	NP		001
-030E	R254H155000664		. . WALL-REAR used on 001L, 001Q SEE 25-41-51-05B FOR DET	NP		001
-030F	D2549010513264		. . WALL-REAR used on 001A, 001B, 001T SEE 25-41-51-050 FOR DET	NP		001

- ITEM NOT ILLUSTRATED

FIG. ITEM	PART NUMBER	AIRLINE STOCK NUMBER	NOMENCLATURE 1234567		EFF CODE	UNITS PER ASSY
-030G	D2549010500064		. . WALL-REAR used on 001N SEE 25-41-51-050 FOR DET	NP		001
-030H	D2549010509864		. . WALL-REAR used on 001P SEE 25-41-51-05B FOR DET	NP		001
040A	D2549020605065		. . WALL-SIDE used on 001A, 001T SEE 25-41-51-06H FOR DET	NP		001
-040B	D2549020608465		. . WALL-SIDE used on 001B SEE 25-41-51-06H FOR DET	NP		001
-040C	D2549020607465		. . WALL-SIDE used on 001C SEE 25-41-51-06H FOR DET	NP		001
-040D	D2549020607665		. . WALL-SIDE used on 001D SEE 25-41-51-06G FOR DET	NP		001
-040E	D2549020606865		. . WALL-SIDE used on 001E, 001F, 001G SEE 25-41-51-06G FOR DET	NP		001
-040F	D2549010511665		. . WALL-SIDE used on 001H SEE 25-41-51-06H FOR DET	NP		001
-040G	D2549030507065		. . WALL-SIDE PRE VSB A2-254-25-080 used on 001J SEE 25-41-51-06G FOR DET	NP		001
-040H	D2549020608665		. . WALL-SIDE used on 001K SEE 25-41-51-06G FOR DET	NP		001

- ITEM NOT ILLUSTRATED

FIG. ITEM	PART NUMBER	AIRLINE STOCK NUMBER	NOMENCLATURE 1234567	EFF CODE	UNITS PER ASSY
-040J	D2549020610065		. . WALL-SIDE NP used on 001L, 001Q SEE 25-41-51-06H FOR DET		001
-040K	D2549020608265		. . WALL-SIDE NP used on 001M, 001S SEE 25-41-51-06H FOR DET		001
-040L	D2549020500265		. . WALL-SIDE NP used on 001N SEE 25-41-51-06A FOR DET		001
-040M	D2549020606865		. . WALL-SIDE NP used on 001P SEE 25-41-51-06G FOR DET		001
-040N	R22540117200265		. . WALL-SIDE NP POST VSB A2-254-25-080 used on 001R SEE 25-41-51-06G FOR DET		001
050A	D2549020605066		. . HOUSING NP used on 001A, 001B, 001T SEE 25-41-51-07E FOR DET		001
-050B	D2549030506266		. . HOUSING NP used on 001C SEE 25-41-51-07E FOR DET		001
-050C	D2549020607066		. . HOUSING NP used on 001D, 001E, 001F, 001G, 001J, 001P, 001R SEE 25-41-51-07Y FOR DET		001
-050D	D2549010510266		. . HOUSING NP used on 001H SEE 25-41-51-07D FOR DET		001
-050E	D2549020608666		. . HOUSING NP used on 001K SEE 25-41-51-07E FOR DET		001

- ITEM NOT ILLUSTRATED

FIG. ITEM	PART NUMBER	AIRLINE STOCK NUMBER	NOMENCLATURE 1234567		EFF CODE	UNITS PER ASSY
-050F	D2549030505866		. . HOUSING used on 001L, 001Q SEE 25-41-51-07D FOR DET	NP		001
-050G	D2549020605666		. . HOUSING used on 001M, 001S SEE 25-41-51-07D FOR DET	NP		001
-050H	D2549020503666		. . HOUSING used on 001N SEE 25-41-51-07Y FOR DET	NP		001
060A	D2549010500069		. . DOOR INSTL used on 001A, 001B, 001C, 001D, 001E, 001F, 001G, 001H, 001J, 001K, 001L, 001M, 001N, 001P, 001R, 001S, 001T SEE 25-41-51-100 FOR DET	NP		001
-060B	D2549020610069		. . DOOR INSTL used on 001Q SEE 25-41-51-100 FOR DET	NP		001
070A	A225400276-528		. . DOOR ASSY-SINGLE used on 001A, 001B, 001T SEE 25-41-51-11C FOR DET			001
-070B	A225400276-550		. . DOOR ASSY-SINGLE used on 001C SEE 25-41-51-11C FOR DET			001
-070C	A225400276-906		. . DOOR ASSY-SINGLE used on 001D, 001E, 001F, 001G, 001P SEE 25-41-51-11C FOR DET			001
-070D	A225400276-508		. . DOOR ASSY-SINGLE used on 001H SEE 25-41-51-11B FOR DET			001

- ITEM NOT ILLUSTRATED

FIG. ITEM	PART NUMBER	AIRLINE STOCK NUMBER	NOMENCLATURE 1234567		EFF CODE	UNITS PER ASSY
-070E	A225400276-914		. . DOOR ASSY-SINGLE used on 001J, 001R SEE 25-41-51-11C FOR DET			001
-070F	A225400276-908		. . DOOR ASSY-SINGLE used on 001K SEE 25-41-51-11C FOR DET			001
-070G	A225400276-514		. . DOOR ASSY-SINGLE used on 001L, 001Q SEE 25-41-51-11D FOR DET			001
-070H	A225400276-536		. . DOOR ASSY-SINGLE used on 001M, 001S SEE 25-41-51-11C FOR DET			001
-070J	A225400270-906		. . DOOR ASSY-SINGLE used on 001N SEE 25-41-51-11A FOR DET			001
080A	D2549020604271		. . TOILET UNIT AND TOILET SHROUD used on 001A, 001B, 001H, 001J, 001L, 001Q, 001R, 001T SEE 25-41-51-12C FOR DET	NP		001
-080B	D2549030506271		. . TOILET UNIT AND TOILET SHROUD used on 001C SEE 25-41-51-12C FOR DET	NP		001
-080C	D2549020607671		. . TOILET UNIT AND TOILET SHROUD used on 001D, 001E, 001F, 001G, 001P SEE 25-41-51-12C FOR DET	NP		001
-080D	D2549020506271		. . TOILET UNIT AND TOILET SHROUD used on 001M, 001S SEE 25-41-51-12C FOR DET	NP		001

- ITEM NOT ILLUSTRATED

FIG. ITEM	PART NUMBER	AIRLINE STOCK NUMBER	NOMENCLATURE 1234567		EFF CODE	UNITS PER ASSY
-080E	D2549020608671		. . TOILET UNIT AND TOILET SHROUD used on 001K SEE 25-41-51-12C FOR DET	NP		001
-080F	D2549020601471		. . TOILET UNIT AND TOILET SHROUD used on 001N SEE 25-41-51-12A FOR DET	NP		001
090A	D2549030506272		. . PAN-FLOOR used on 001A, 001B, 001H, 001T SEE 25-41-51-13B FOR DET	NP		001
-090B	D2549020607472		. . PAN-FLOOR used on 001C SEE 25-41-51-13C FOR DET	NP		001
-090C	D2549020604872		. . PAN-FLOOR used on 001D, 001E, 001F, 001G SEE 25-41-51-13C FOR DET	NP		001
-090D	D2549030507072		. . PAN-FLOOR used on 001J, 001R SEE 25-41-51-13C FOR DET	NP		001
-090E	D2549020608672		. . PAN-FLOOR used on 001K SEE 25-41-51-13B FOR DET	NP		001
-090F	D2549030504072		. . PAN-FLOOR used on 001L, 001Q SEE 25-41-51-13B FOR DET	NP		001
-090G	D2549020605672		. . PAN-FLOOR used on 001M, 001S SEE 25-41-51-13B FOR DET	NP		001
-090H	D2549020700472		. . PAN-FLOOR used on 001N SEE 25-41-51-13V FOR DET	NP		001

- ITEM NOT ILLUSTRATED

FIG. ITEM	PART NUMBER	AIRLINE STOCK NUMBER	NOMENCLATURE 1234567		EFF CODE	UNITS PER ASSY
-090J	D2549020700672		. . PAN-FLOOR POST SB 25-1289 used on 001P SEE 25-41-51-13V FOR DET	NP		001
100A	D2549020602673		. . LIGHT-DOOR used on 001A, 001B, 001C, 001D, 001E, 001F, 001G, 001H, 001J, 001K, 001L, 001P, 001Q, 001R, 001T SEE 25-41-51-140 FOR DET	NP		001
-100B	D2549020602873		. . LIGHT-DOOR used on 001M, 001S SEE 25-41-51-140 FOR DET	NP		001
-100C	D2549010500073		. . LIGHT-DOOR used on 001N SEE 25-41-51-140 FOR DET	NP		001
110A	D2549010509874		. . WASHBASIN UNIT used on 001A, 001B, 001T SEE 25-41-51-15D FOR DET	NP		001
-110B	D2549010511074		. . WASHBASIN UNIT used on 001C, 001D, 001E, 001F, 001G, 001H, 001P SEE 25-41-51-15C FOR DET	NP		001
-110C	D2549010513074		. . WASHBASIN UNIT used on 001J, 001R SEE 25-41-51-15E FOR DET	NP		001
-110D	D2549010511474		. . WASHBASIN UNIT used on 001L, 001Q SEE 25-41-51-15C FOR DET	NP		001
-110E	D2549020613674		. . WASHBASIN UNIT used on 001M, 001S SEE 25-41-51-15F FOR DET	NP		001

- ITEM NOT ILLUSTRATED

FIG. ITEM	PART NUMBER	AIRLINE STOCK NUMBER	NOMENCLATURE 1234567		EFF CODE	UNITS PER ASSY
-110F	D2549020604474		. . WASHBASIN UNIT used on 001K SEE 25-41-51-15C FOR DET	NP		001
-110G	D2549020500274		. . WASHBASIN UNIT used on 001N SEE 25-41-51-150 FOR DET	NP		001
120A	D2549030505475		. . DOOR ASSY-WASHBASIN UNIT used on 001M, 001S SEE 25-41-51-16B FOR DET	NP		001
-120B	D2549030506275		. . DOOR ASSY-WASHBASIN UNIT used on 001C SEE 25-41-51-16C FOR DET	NP		001
-120C	D2549020607675		. . DOOR ASSY-WASHBASIN UNIT used on 001D, 001E, 001F, 001G, 001P SEE 25-41-51-16C FOR DET	NP		001
-120D	D2549020607075		. . DOOR ASSY-WASHBASIN UNIT used on 001A, 001B, 001H, 001J, 001K, 001L, 001Q, 001R, 001T SEE 25-41-51-16B FOR DET	NP		001
-120E	D2549020601475		. . DOOR ASSY-WASHBASIN UNIT used on 001N SEE 25-41-51-160 FOR DET	NP		001
130A	D2549030504876		. . PANEL ASSY-WASHBASIN UNIT used on 001A, 001B, 001H, 001J, 001K, 001L, 001Q, 001R, 001T SEE 25-41-51-17C FOR DET	NP		001

- ITEM NOT ILLUSTRATED

FIG. ITEM	PART NUMBER	AIRLINE STOCK NUMBER	NOMENCLATURE 1234567	EFF CODE	UNITS PER ASSY
-130B	D2549030506276		. . PANEL ASSY-WASHBASIN UNIT NP used on 001C SEE 25-41-51-17C FOR DET		001
-130C	D2549020607676		. . PANEL ASSY-WASHBASIN UNIT NP used on 001D, 001E, 001F, 001G, 001P SEE 25-41-51-17C FOR DET		001
-130D	D2549020506276		. . PANEL ASSY-WASHBASIN UNIT NP used on 001M, 001S SEE 25-41-51-17C FOR DET		001
-130E	D2549020601676		. . PANEL ASSY-WASHBASIN UNIT NP used on 001N SEE 25-41-51-17A FOR DET		001
140A	D2549030504877		. . BIN-WASTE,CHUTE-WASTE AND EXTINGUISHER-FIRE NP used on 001A, 001B, 001C, 001D, 001E, 001F, 001G, 001H, 001J, 001K, 001L, 001M, 001P, 001Q, 001R, 001S, 001T SEE 25-41-51-180 FOR DET		001
-140B	D2549010500077		. . BIN-WASTE,CHUTE-WASTE AND EXTINGUISHER-FIRE NP used on 001N SEE 25-41-51-180 FOR DET		001
150A	D2549030505878		. . CABINET-SERVICE NP used on 001A, 001B, 001T SEE 25-41-51-19E FOR DET		001

- ITEM NOT ILLUSTRATED

FIG. ITEM	PART NUMBER	AIRLINE STOCK NUMBER	NOMENCLATURE 1234567	EFF CODE	UNITS PER ASSY
-150B	D2549030504878		. . CABINET-SERVICE NP PRE VSB A2-254-25-080 used on 001C, 001D, 001E, 001F, 001G, 001J, 001P SEE 25-41-51-19E FOR DET		001
-150C	D2549030504078		. . CABINET-SERVICE NP used on 001H, 001K, 001L, 001Q SEE 25-41-51-19E FOR DET		001
-150D	D2549020605678		. . CABINET-SERVICE NP used on 001M, 001S SEE 25-41-51-19E FOR DET		001
-150E	D2549020600078		. . CABINET-SERVICE NP used on 001N SEE 25-41-51-19B FOR DET		001
-150F	R22540114500278		. . CABINET-SERVICE NP POST VSB A2-254-25-080 used on 001R SEE 25-41-51-19E FOR DET		001
160A	D2549010500479		. . TABLE-NURSING NP used on 001C, 001D, 001E, 001F, 001G, 001H, 001J, 001K, 001N, 001P, 001R SEE 25-41-51-200 FOR DET		001
-160B	D2549020613679		. . TABLE-NURSING NP used on 001M, 001S SEE 25-41-51-20A FOR DET		001
-160C	D2549010512679		. . TABLE-NURSING NP used on 001L, 001Q SEE 25-41-51-20A FOR DET		001
-160D	D2549010510679		. . TABLE-NURSING NP used on 001A, 001B, 001T SEE 25-41-51-20A FOR DET		001

- ITEM NOT ILLUSTRATED

FIG. ITEM	PART NUMBER	AIRLINE STOCK NUMBER	NOMENCLATURE 1234567		EFF CODE	UNITS PER ASSY
170A	D2549030504880		. . VENTILATION SYSTEM used on 001A, 001B, 001C, 001D, 001E, 001F, 001G, 001H, 001J, 001K, 001L, 001P, 001Q, 001R, 001T SEE 25-41-51-210 FOR DET	NP		001
-170B	D2549020506280		. . VENTILATION SYSTEM used on 001M, 001S SEE 25-41-51-210 FOR DET	NP		001
-170C	D2549010500080		. . VENTILATION SYSTEM used on 001N SEE 25-41-51-210 FOR DET	NP		001
180A	D2549030504881		. . WATER SYSTEM-POTABLE used on 001A, 001B, 001C, 001H, 001J, 001K, 001L, 001Q, 001R, 001T SEE 25-41-51-22D FOR DET	NP		001
-180B	D2549030504081		. . WATER SYSTEM-POTABLE used on 001G, 001M, 001S SEE 25-41-51-22G FOR DET	NP		001
-180C	D2549030507881		. . WATER SYSTEM-POTABLE used on 001D, 001E, 001F, 001P SEE 25-41-51-22D FOR DET	NP		001
-180D	D2549010501881		. . WATER SYSTEM-POTABLE used on 001N SEE 25-41-51-220 FOR DET	NP		001
190A	D2549010511082		. . WATER SYSTEM-WASTE used on 001A, 001B, 001C, 001H, 001J, 001K, 001L, 001Q, 001R, 001T SEE 25-41-51-23B FOR DET	NP		001

- ITEM NOT ILLUSTRATED

FIG. ITEM	PART NUMBER	AIRLINE STOCK NUMBER	NOMENCLATURE 1234567		EFF CODE	UNITS PER ASSY
-190B	D2549020605682		. . WATER SYSTEM-WASTE used on 001M, 001S SEE 25-41-51-23B FOR DET	NP		001
-190C	D2549030504082		. . WATER SYSTEM-WASTE used on 001D, 001E, 001F, 001G, 001P SEE 25-41-51-23B FOR DET	NP		001
-190D	D2549030500282		. . WATER SYSTEM-WASTE used on 001N SEE 25-41-51-230 FOR DET	NP		001
200A	D2549030504883		. . ELECTRICAL SYSTEM used on 001A, 001B, 001C, 001D, 001E, 001F, 001G, 001H, 001K, 001L, 001P, 001Q, 001T SEE 25-41-51-26C FOR DET	NP		001
-200B	D2549030507083		. . ELECTRICAL SYSTEM used on 001J, 001R SEE 25-41-51-26C FOR DET	NP		001
-200C	D2549020605683		. . ELECTRICAL SYSTEM used on 001M, 001S SEE 25-41-51-26C FOR DET	NP		001
-200D	D2549030500483		. . ELECTRICAL SYSTEM used on 001N SEE 25-41-51-260 FOR DET	NP		001

- ITEM NOT ILLUSTRATED

THIS PAGE IS INTENTIONALLY LEFT BLANK

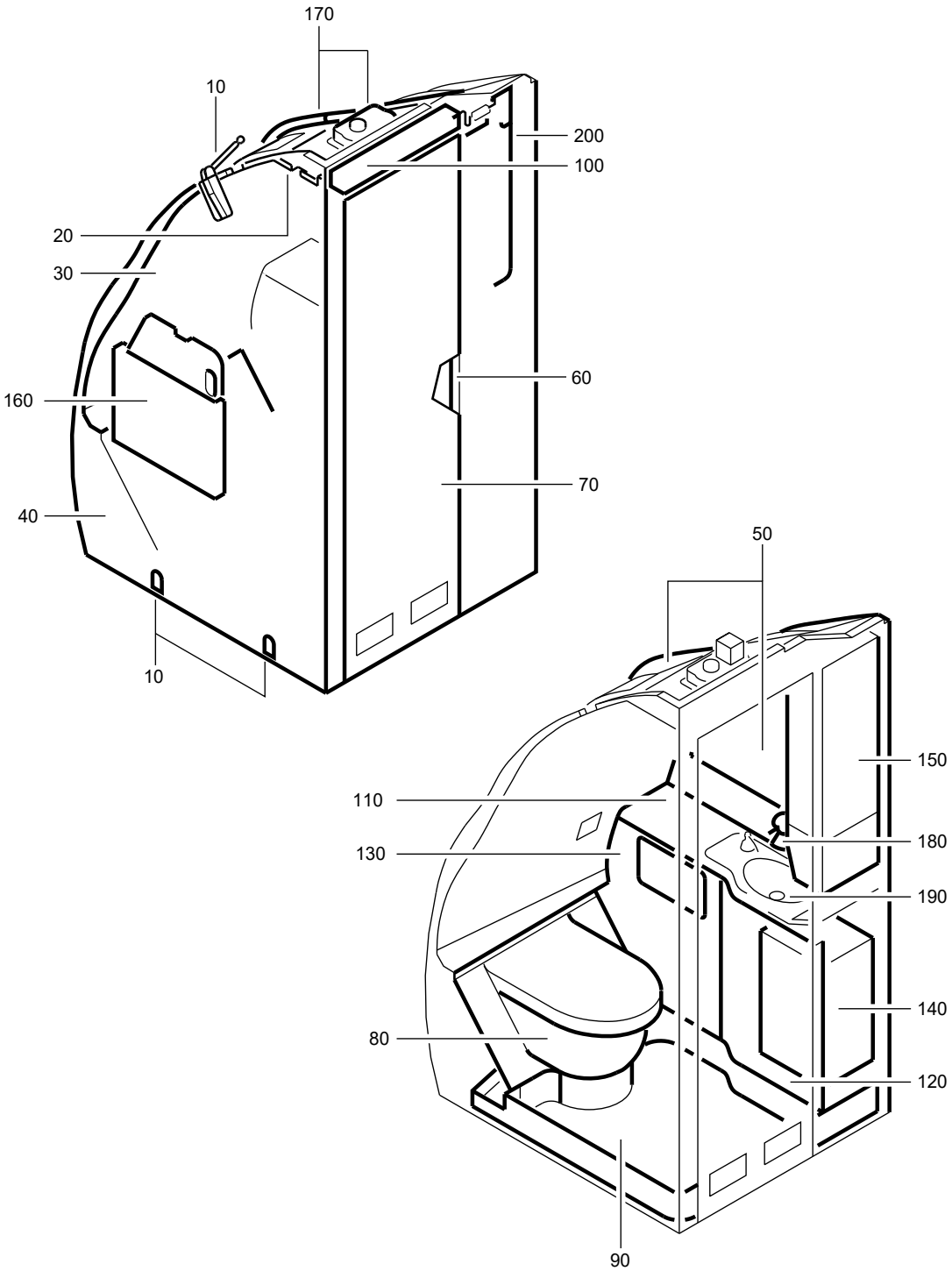

F_PL_254151_01_N_01_00

LAVATORY A ASSY
Figure 01N/EN254151SHEET01N01

FIG. ITEM	PART NUMBER	AIRLINE STOCK NUMBER	NOMENCLATURE 1234567	EFF CODE	UNITS PER ASSY
01N					
-001A	D2549010513200		. LAVATORY A ASSY SEE SIL 25-117 FOR DET		RF
-001B	D2549020607800		. LAVATORY A ASSY SEE SIL 25-117 FOR DET		RF
-001C	D2549030506400		. LAVATORY A ASSY PRE VSB A2-254-25-131 SEE SIL 25-117 FOR DET		RF
-001D	D2549010511800		. LAVATORY A ASSY SEE SIL 25-117 FOR DET		RF
-001E	D2549020611000		. LAVATORY A ASSY PRE VSB A2-254-25-100		RF
-001F	D2549010513000		. LAVATORY A ASSY SEE SIL 25-117 FOR DET		RF
-001G	D2549020609800		. LAVATORY A ASSY SEE SIL 25-117 FOR DET		RF
-001H	D2549020610600		. LAVATORY A ASSY PRE VSB A2-254-25-131 SEE SIL 25-117 FOR DET		RF
-001J	D2549020610200		. LAVATORY A ASSY SEE SIL 25-117 FOR DET		RF
-001K	D2549030507200		. LAVATORY A ASSY SEE SIL 25-117 FOR DET		RF
-001L	D2549010511800		. LAVATORY A ASSY POST SB 25-1312 SEE SIL 25-117 FOR DET		RF
-001M	D2549020602000		. LAVATORY A ASSY SEE SIL 25-117 FOR DET		RF

- ITEM NOT ILLUSTRATED

FIG. ITEM	PART NUMBER	AIRLINE STOCK NUMBER	NOMENCLATURE 1234567		EFF CODE	UNITS PER ASSY
-001N	D2549010509000		. LAVATORY A ASSY POST SB 25-1289 SEE SIL 25-117 FOR DET			RF
-001P	R225401176-000		. LAVATORY A ASSY POST VSB A2-254-25-100			RF
-001Q	R225401137-010		. LAVATORY A ASSY POST VSB A2-254-25-131			RF
-001R	R225401137-002		. LAVATORY A ASSY POST VSB A2-254-25-131			RF
010A	D2549020602661		. . ATTACHMENT-LAVATORY used on 001A, 001B, 001C, 001D, 001E, 001F, 001G, 001H, 001N, 001P, 001Q, 001R SEE 25-41-51-020 FOR DET	NP		001
-010B	D2549020610261		. . ATTACHMENT-LAVATORY used on 001J SEE 25-41-51-020 FOR DET	NP		001
-010C	D2549030507261		. . ATTACHMENT-LAVATORY used on 001K SEE 25-41-51-020 FOR DET	NP		001
-010D	D2549020705861		. . ATTACHMENT-LAVATORY POST SB 25-1312 used on 001L SEE 25-41-51-02D FOR DET	NP		001
-010E	D2549010500061		. . ATTACHMENT-LAVATORY used on 001M SEE 25-41-51-020 FOR DET	NP		001
020A	D2549020602663		. . PANEL-CEILING used on 001A, 001B, 001C, 001D, 001E, 001F, 001G, 001H, 001L, 001N, 001P, 001Q, 001R SEE 25-41-51-040 FOR DET	NP		001

- ITEM NOT ILLUSTRATED

FIG. ITEM	PART NUMBER	AIRLINE STOCK NUMBER	NOMENCLATURE 1234567	EFF CODE	UNITS PER ASSY
-020B	D2549020610263		. . PANEL-CEILING NP used on 001J SEE 25-41-51-040 FOR DET		001
-020C	D2549030507263		. . PANEL-CEILING NP used on 001K SEE 25-41-51-040 FOR DET		001
-020D	D2549010500063		. . PANEL-CEILING NP used on 001M SEE 25-41-51-040 FOR DET		001
030A	D2549030505264		. . WALL-REAR NP used on 001B, 001C, 001R SEE 25-41-51-050 FOR DET		001
-030B	D2549010511864		. . WALL-REAR NP used on 001D, 001L SEE 25-41-51-05A FOR DET		001
-030C	D2549010510064		. . WALL-REAR NP used on 001E, 001F, 001G, 001H, 001P, 001Q, 001R SEE 25-41-51-05B FOR DET		001
-030D	D2549020611664		. . WALL-REAR NP used on 001A, 001N SEE 25-41-51-05A FOR DET		001
-030E	D2549020610264		. . WALL-REAR NP used on 001J SEE 25-41-51-05B FOR DET		001
-030F	D2549030507264		. . WALL-REAR NP used on 001K SEE 25-41-51-05B FOR DET		001
-030G	D2549010509064		. . WALL-REAR NP used on 001M SEE 25-41-51-050 FOR DET		001

- ITEM NOT ILLUSTRATED

FIG. ITEM	PART NUMBER	AIRLINE STOCK NUMBER	NOMENCLATURE 1234567	EFF CODE	UNITS PER ASSY
040A	D2549010509065		. . WALL-SIDE NP used on 001A, 001N SEE 25-41-51-48E FOR DET		001
-040B	D2549020607865		. . WALL-SIDE NP used on 001B SEE 25-41-51-06J FOR DET		001
-040C	D2549030506465		. . WALL-SIDE NP used on 001C, 001R SEE 25-41-51-06J FOR DET		001
-040D	D2549010511865		. . WALL-SIDE NP used on 001D SEE 25-41-51-06J FOR DET		001
-040E	D2549020611065		. . WALL-SIDE NP used on 001E, 001P SEE 25-41-51-06J FOR DET		001
-040F	D2549020610665		. . WALL-SIDE NP used on 001H, 001Q SEE 25-41-51-06P FOR DET		001
-040G	D2549020609865		. . WALL-SIDE NP used on 001G SEE 25-41-51-06J FOR DET		001
-040H	D2549020610265		. . WALL-SIDE NP used on 001J SEE 25-41-51-06J FOR DET		001
-040J	D2549030507265		. . WALL-SIDE NP used on 001K SEE 25-41-51-06J FOR DET		001
-040K	D2549010513065		. . WALL-SIDE NP used on 001F SEE 25-41-51-06J FOR DET		001

- ITEM NOT ILLUSTRATED

FIG. ITEM	PART NUMBER	AIRLINE STOCK NUMBER	NOMENCLATURE 1234567	EFF CODE	UNITS PER ASSY
-040L	D2549020614865		. . WALL-SIDE NP used on 001L SEE 25-41-51-06K FOR DET		001
-040M	D2549020602065		. . WALL-SIDE NP used on 001M SEE 25-41-51-06D FOR DET		001
050A	D2549010601066		. . HOUSING NP used on 001A, 001N SEE 25-41-51-07G FOR DET		001
-050B	D2549020607066		. . HOUSING NP used on 001B, 001D, 001F, 001L SEE 25-41-51-07Y FOR DET		001
-050C	D2549030505266		. . HOUSING NP used on 001C, 001H, 001Q, 001R SEE 25-41-51-07B FOR DET		001
-050D	D2549010511066		. . HOUSING NP used on 001E, 001P SEE 25-41-51-07B FOR DET		001
-050E	D2549030507266		. . HOUSING NP used on 001K SEE 25-41-51-07E FOR DET		001
-050F	D2549020604266		. . HOUSING NP used on 001G SEE 25-41-51-07D FOR DET		001
-050G	D2549020610266		. . HOUSING NP used on 001J SEE 25-41-51-07E FOR DET		001
-050H	D2549020602066		. . HOUSING NP used on 001M SEE 25-41-51-070 FOR DET		001

- ITEM NOT ILLUSTRATED

FIG. ITEM	PART NUMBER	AIRLINE STOCK NUMBER	NOMENCLATURE 1234567	EFF CODE	UNITS PER ASSY
060A	D2549010500069		. . DOOR INSTL NP used on 001B, 001C, 001D, 001E, 001F, 001G, 001H, 001J, 001K, 001L, 001M, 001P, 001Q, 001R SEE 25-41-51-100 FOR DET		001
-060B	D2549020401269		. . DOOR INSTL NP used on 001A, 001N SEE 25-41-51-10A FOR DET		001
070A	A2254002768506		. . DOOR ASSY-SINGLE used on 001A, 001N SEE 25-41-51-11N FOR DET		001
-070B	A225400276-508		. . DOOR ASSY-SINGLE used on 001B SEE 25-41-51-11B FOR DET		001
-070C	A225400276-530		. . DOOR ASSY-SINGLE used on 001C, 001H, 001Q, 001R SEE 25-41-51-11B FOR DET		001
-070D	A225400276-512		. . DOOR ASSY-SINGLE used on 001D, 001F, 001L SEE 25-41-51-11C FOR DET		001
-070E	A225400276-502		. . DOOR ASSY-SINGLE used on 001E, 001P SEE 25-41-51-11B FOR DET		001
-070F	A225400276-918		. . DOOR ASSY-SINGLE used on 001K SEE 25-41-51-11D FOR DET		001
-070G	A225400276-556		. . DOOR ASSY-SINGLE used on 001G SEE 25-41-51-11D FOR DET		001

- ITEM NOT ILLUSTRATED

FIG. ITEM	PART NUMBER	AIRLINE STOCK NUMBER	NOMENCLATURE 1234567		EFF CODE	UNITS PER ASSY
-070H	A225400276-920		. . DOOR ASSY-SINGLE used on 001J SEE 25-41-51-11D FOR DET			001
-070J	A225400270-528		. . DOOR ASSY-SINGLE used on 001M SEE 25-41-51-11A FOR DET			001
-070K	A225400276-506		. . DOOR ASSY-SINGLE used on 001A SEE 25-41-51-11D FOR DET			001
080A	D2549010601071		. . TOILET UNIT AND TOILET SHROUD used on 001A, 001N SEE 25-41-51-12D FOR DET	NP		001
-080B	D2549020604271		. . TOILET UNIT AND TOILET SHROUD used on 001B, 001C, 001D, 001E, 001F, 001G, 001H, 001L, 001P, 001Q, 001R SEE 25-41-51-12C FOR DET	NP		001
-080C	D2549020610271		. . TOILET UNIT AND TOILET SHROUD used on 001J SEE 25-41-51-12C FOR DET	NP		001
-080D	D2549030507271		. . TOILET UNIT AND TOILET SHROUD used on 001K SEE 25-41-51-12D FOR DET	NP		001
-080E	D2549010507471		. . TOILET UNIT AND TOILET SHROUD used on 001M SEE 25-41-51-12A FOR DET	NP		001

- ITEM NOT ILLUSTRATED

FIG. ITEM	PART NUMBER	AIRLINE STOCK NUMBER	NOMENCLATURE 1234567	EFF CODE	UNITS PER ASSY
090A	D2549020603272		. . PAN-FLOOR NP used on 001A, 001N SEE 25-41-51-13U FOR DET		001
-090B	D2549020605272		. . PAN-FLOOR NP used on 001B SEE 25-41-51-13B FOR DET		001
-090C	D2549020610672		. . PAN-FLOOR NP PRE VSB A2-254-25-131 used on 001C, 001H SEE 25-41-51-13C FOR DET		001
-090D	D2549020606072		. . PAN-FLOOR NP used on 001D, 001L SEE 25-41-51-13C FOR DET		001
-090E	D2549020604872		. . PAN-FLOOR NP used on 001E, 001P SEE 25-41-51-13C FOR DET		001
-090F	D2549010513072		. . PAN-FLOOR NP used on 001F SEE 25-41-51-13C FOR DET		001
-090G	D2549020609872		. . PAN-FLOOR NP used on 001G SEE 25-41-51-13C FOR DET		001
-090H	D2549020512472		. . PAN-FLOOR NP used on 001K SEE 25-41-51-13H FOR DET		001
-090J	D2549020610272		. . PAN-FLOOR NP used on 001J SEE 25-41-51-13C FOR DET		001
-090K	D2549010500672		. . PAN-FLOOR NP used on 001M SEE 25-41-51-130 FOR DET		001

- ITEM NOT ILLUSTRATED

FIG. ITEM	PART NUMBER	AIRLINE STOCK NUMBER	NOMENCLATURE 1234567	EFF CODE	UNITS PER ASSY
-090L	R22540113700072		. . PAN-FLOOR NP POST VSB A2-254-25-131 used on 001Q, 001R SEE 25-41-51-13C FOR DET		001
100A	D2549020602673		. . LIGHT-DOOR NP used on 001A, 001B, 001C, 001D, 001E, 001F, 001G, 001H, 001L, 001N, 001P, 001Q, 001R SEE 25-41-51-140 FOR DET		001
-100B	D2549020610273		. . LIGHT-DOOR NP used on 001J SEE 25-41-51-140 FOR DET		001
-100C	D2549030507273		. . LIGHT-DOOR NP used on 001K SEE 25-41-51-140 FOR DET		001
-100D	D2549010500073		. . LIGHT-DOOR NP used on 001M SEE 25-41-51-140 FOR DET		001
110A	D2549010511074		. . WASHBASIN UNIT NP used on 001A, 001B, 001E, 001G, 001N, 001P SEE 25-41-51-15C FOR DET		001
-110B	D2549030504874		. . WASHBASIN UNIT NP used on 001C, 001H, 001J, 001Q, 001R SEE 25-41-51-15C FOR DET		001
-110C	D2549010511874		. . WASHBASIN UNIT NP used on 001D, 001L SEE 25-41-51-15C FOR DET		001
-110D	D2549010513074		. . WASHBASIN UNIT NP used on 001F SEE 25-41-51-15E FOR DET		001

- ITEM NOT ILLUSTRATED

FIG. ITEM	PART NUMBER	AIRLINE STOCK NUMBER	NOMENCLATURE 1234567		EFF CODE	UNITS PER ASSY
-110E	D2549030507274		. . WASHBASIN UNIT used on 001K SEE 25-41-51-15E FOR DET	NP		001
-110F	D2549020500274		. . WASHBASIN UNIT used on 001M SEE 25-41-51-150 FOR DET	NP		001
120A	D2549010509475		. . DOOR ASSY-WASHBASIN UNIT used on 001A, 001N SEE 25-41-51-16B FOR DET	NP		001
-120B	D2549020607075		. . DOOR ASSY-WASHBASIN UNIT used on 001B, 001D, 001E, 001F, 001G, 001H, 001L, 001P, 001Q SEE 25-41-51-16B FOR DET	NP		001
-120C	D2549030504075		. . DOOR ASSY-WASHBASIN UNIT used on 001C, 001R SEE 25-41-51-16B FOR DET	NP		001
-120D	D2549020610275		. . DOOR ASSY-WASHBASIN UNIT used on 001J SEE 25-41-51-16B FOR DET	NP		001
-120E	D2549030507275		. . DOOR ASSY-WASHBASIN UNIT used on 001K SEE 25-41-51-16C FOR DET	NP		001
-120F	D2549010502275		. . DOOR ASSY-WASHBASIN UNIT used on 001M SEE 25-41-51-160 FOR DET	NP		001

- ITEM NOT ILLUSTRATED

FIG. ITEM	PART NUMBER	AIRLINE STOCK NUMBER	NOMENCLATURE 1234567	EFF CODE	UNITS PER ASSY
130A	D2549010509476		. . PANEL ASSY-WASHBASIN UNIT NP used on 001A, 001N SEE 25-41-51-17C FOR DET		001
-130B	D2549030504876		. . PANEL ASSY-WASHBASIN UNIT NP used on 001B, 001C, 001D, 001F, 001G, 001H, 001L, 001Q, 001R SEE 25-41-51-17C FOR DET		001
-130C	D2549010510876		. . PANEL ASSY-WASHBASIN UNIT NP used on 001E, 001P SEE 25-41-51-17C FOR DET		001
-130D	D2549030507276		. . PANEL ASSY-WASHBASIN UNIT NP used on 001K SEE 25-41-51-17D FOR DET		001
-130E	D2549020610276		. . PANEL ASSY-WASHBASIN UNIT NP used on 001J SEE 25-41-51-17C FOR DET		001
-130F	D2549020602076		. . PANEL ASSY-WASHBASIN UNIT NP used on 001M SEE 25-41-51-17A FOR DET		001
140A	D2549030504877		. . BIN-WASTE,CHUTE-WASTE AND EXTINGUISHER-FIRE NP used on 001A, 001B, 001C, 001D, 001E, 001F, 001G, 001H, 001K, 001L, 001N, 001P, 001Q, 001R SEE 25-41-51-180 FOR DET		001

- ITEM NOT ILLUSTRATED

FIG. ITEM	PART NUMBER	AIRLINE STOCK NUMBER	NOMENCLATURE 1234567	EFF CODE	UNITS PER ASSY
-140B	D2549010509477		. . BIN-WASTE,CHUTE-WASTE AND EXTINGUISHER-FIRE NP used on 001J SEE 25-41-51-180 FOR DET		001
-140C	D2549010500077		. . BIN-WASTE,CHUTE-WASTE AND EXTINGUISHER-FIRE NP used on 001M SEE 25-41-51-180 FOR DET		001
150A	D2549030504078		. . CABINET-SERVICE NP used on 001A, 001B, 001N SEE 25-41-51-19E FOR DET		001
-150B	D2549030505278		. . CABINET-SERVICE NP used on 001C, 001H, 001Q, 001R SEE 25-41-51-19E FOR DET		001
-150C	D2549010511878		. . CABINET-SERVICE NP used on 001D, 001L SEE 25-41-51-19F FOR DET		001
-150D	D2549030504878		. . CABINET-SERVICE NP used on 001E, 001F, 001G, 001P SEE 25-41-51-19E FOR DET		001
-150E	D2549020610278		. . CABINET-SERVICE NP used on 001J SEE 25-41-51-19F FOR DET		001
-150F	D2549030507278		. . CABINET-SERVICE NP used on 001K SEE 25-41-51-19F FOR DET		001
-150G	D2549020602078		. . CABINET-SERVICE NP used on 001M SEE 25-41-51-19D FOR DET		001

- ITEM NOT ILLUSTRATED

FIG. ITEM	PART NUMBER	AIRLINE STOCK NUMBER	NOMENCLATURE 1234567		EFF CODE	UNITS PER ASSY
160A	D2549010500479		. . TABLE-NURSING used on 001B, 001C, 001E, 001F, 001G, 001H, 001P, 001Q, 001R SEE 25-41-51-200 FOR DET	NP		001
-160B	D2549010510679		. . TABLE-NURSING used on 001J, 001M SEE 25-41-51-20A FOR DET	NP		001
-160C	D2549010512679		. . TABLE-NURSING used on 001A, 001D, 001L, 001N SEE 25-41-51-20A FOR DET	NP		001
-160D	D2549030507279		. . TABLE-NURSING used on 001K SEE 25-41-51-200 FOR DET	NP		001
170A	D2549030504880		. . VENTILATION SYSTEM used on 001A, 001B, 001C, 001D, 001E, 001F, 001G, 001H, 001L, 001N, 001P, 001Q, 001R SEE 25-41-51-210 FOR DET	NP		001
-170B	D2549020610280		. . VENTILATION SYSTEM used on 001J SEE 25-41-51-210 FOR DET	NP		001
-170C	D2549030507280		. . VENTILATION SYSTEM used on 001K SEE 25-41-51-210 FOR DET	NP		001
-170D	D2549010500080		. . VENTILATION SYSTEM used on 001M SEE 25-41-51-210 FOR DET	NP		001
180A	D2549030504881		. . WATER SYSTEM-POTABLE used on 001A, 001B, 001C, 001D, 001E, 001F, 001G, 001H, 001J, 001K, 001L, 001N, 001P, 001Q, 001R SEE 25-41-51-22D FOR DET	NP		001

- ITEM NOT ILLUSTRATED

FIG. ITEM	PART NUMBER	AIRLINE STOCK NUMBER	NOMENCLATURE 1234567	EFF CODE	UNITS PER ASSY
-180B	D2549010501881		. . WATER SYSTEM-POTABLE NP used on 001M SEE 25-41-51-220 FOR DET		001
190A	D2549010511082		. . WATER SYSTEM-WASTE NP used on 001A, 001B, 001E, 001F, 001G, 001K, 001N, 001P SEE 25-41-51-23B FOR DET		001
-190B	D2549030504882		. . WATER SYSTEM-WASTE NP used on 001C, 001D, 001H, 001J, 001L, 001Q, 001R SEE 25-41-51-23B FOR DET		001
-190C	D2549030500282		. . WATER SYSTEM-WASTE NP used on 001M SEE 25-41-51-230 FOR DET		001
200A	D2549030504883		. . ELECTRICAL SYSTEM NP used on 001A, 001B, 001C, 001D, 001E, 001G, 001H, 001K, 001L, 001N, 001P, 001Q, 001R SEE 25-41-51-26C FOR DET		001
-200B	D2549010509483		. . ELECTRICAL SYSTEM NP used on 001J SEE 25-41-51-26C FOR DET		001
-200C	D2549010513083		. . ELECTRICAL SYSTEM NP used on 001F SEE 25-41-51-26C FOR DET		001
-200D	D2549030500483		. . ELECTRICAL SYSTEM NP used on 001M SEE 25-41-51-260 FOR DET		001

- ITEM NOT ILLUSTRATED

THIS PAGE IS INTENTIONALLY LEFT BLANK

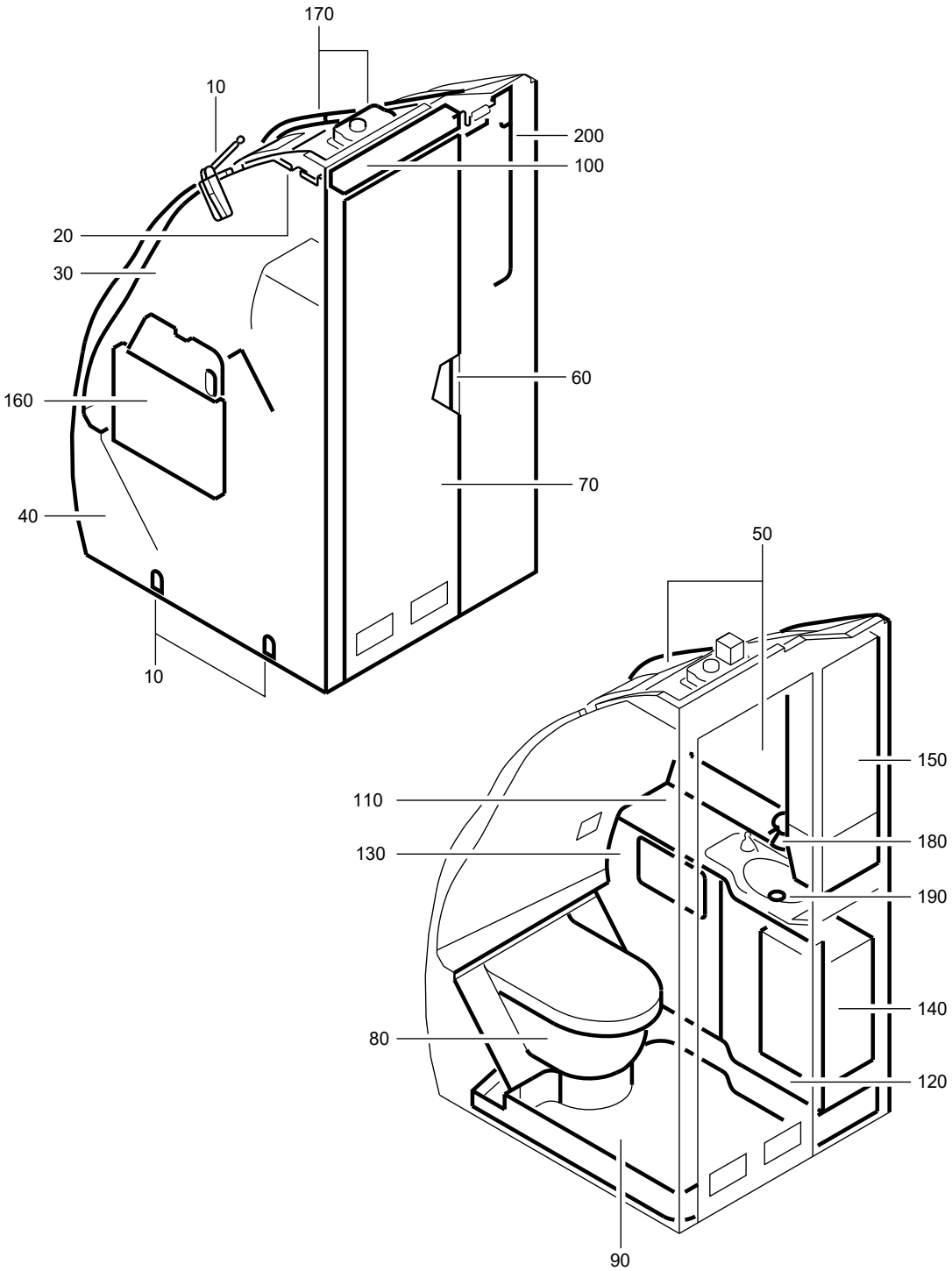

F_PL_254151_01_P_01_00

LAVATORY A ASSY
Figure 01P/EN254151SHEET01P01

FIG. ITEM	PART NUMBER	AIRLINE STOCK NUMBER	NOMENCLATURE 1234567	EFF CODE	UNITS PER ASSY
01P					
-001A	D2549030506600		. LAVATORY A ASSY SEE SIL 25-117 FOR DET		RF
-001B	D2549020506400		. LAVATORY A ASSY SEE SIL 25-117 FOR DET		RF
-001C	D2549020605400		. LAVATORY A ASSY SEE SIL 25-117 FOR DET		RF
-001D	D2549020610800		. LAVATORY A ASSY SEE SIL 25-117 FOR DET		RF
-001E	D2549010512200		. LAVATORY A ASSY SEE SIL 25-117 FOR DET		RF
-001F	D2549010512400		. LAVATORY A ASSY SEE SIL 25-117 FOR DET		RF
-001G	D2549020610400		. LAVATORY A ASSY SEE SIL 25-117 FOR DET		RF
-001H	D2549020611400		. LAVATORY A ASSY SEE SIL 25-117 FOR DET		RF
-001J	D2549010514000		. LAVATORY A ASSY SEE SIL 25-117 FOR DET		RF
-001K	D2549020611800		. LAVATORY A ASSY SEE SIL 25-117 FOR DET		RF
-001L	D2549010510600		. LAVATORY A ASSY SEE SIL 25-117 FOR DET		RF
-001M	D2549030504200		. LAVATORY A ASSY SEE SIL 25-117 FOR DET		RF
-001N	D2549010510600		. LAVATORY A ASSY SEE SIL 25-117 FOR DET		RF
-001P	D2549020610800		. LAVATORY A ASSY SEE SIL 25-117 FOR DET		RF

- ITEM NOT ILLUSTRATED

FIG. ITEM	PART NUMBER	AIRLINE STOCK NUMBER	NOMENCLATURE 1234567	EFF CODE	UNITS PER ASSY
010A	D2549020602861		. . ATTACHMENT-LAVATORY NP used on 001A, 001B SEE 25-41-51-020 FOR DET		001
-010B	D2549020602661		. . ATTACHMENT-LAVATORY NP used on 001E, 001F, 001K, 001L, 001M, 001N SEE 25-41-51-020 FOR DET		001
-010C	D2549030505661		. . ATTACHMENT-LAVATORY NP used on 001H, 001J SEE 25-41-51-020 FOR DET		001
-010D	D2549020610061		. . ATTACHMENT-LAVATORY NP used on 001C, 001D, 001G SEE 25-41-51-02D FOR DET		001
-010E	D2549020610061		. . ATTACHMENT-LAVATORY NP used on 001P SEE 25-41-51-02D FOR DET		001
020A	D2549020602863		. . PANEL-CEILING NP used on 001A, 001B SEE 25-41-51-040 FOR DET		001
-020B	D2549020602663		. . PANEL-CEILING NP used on 001C, 001D, 001E, 001F, 001G, 001K, 001L, 001M, 001N, 001P SEE 25-41-51-040 FOR DET		001
-020C	D2549030505663		. . PANEL-CEILING NP used on 001H, 001J SEE 25-41-51-040 FOR DET		001
030A	D2549030505464		. . WALL-REAR NP used on 001A SEE 25-41-51-05A FOR DET		001

- ITEM NOT ILLUSTRATED

FIG. ITEM	PART NUMBER	AIRLINE STOCK NUMBER	NOMENCLATURE 1234567	EFF CODE	UNITS PER ASSY
-030B	D2549020506264		. . WALL-REAR NP used on 001B SEE 25-41-51-050 FOR DET		001
-030C	D2549030505264		. . WALL-REAR NP used on 001C, 001F, 001G, 001K SEE 25-41-51-050 FOR DET		001
-030D	D2549010511864		. . WALL-REAR NP used on 001D SEE 25-41-51-05A FOR DET		001
-030E	D2549030505664		. . WALL-REAR NP used on 001H SEE 25-41-51-050 FOR DET		001
-030F	D2549010514064		. . WALL-REAR NP used on 001J SEE 25-41-51-05B FOR DET		001
-030G	D2549010512664		. . WALL-REAR NP used on 001L, 001M, 001N SEE 25-41-51-05B FOR DET		001
-030H	D2549010513264		. . WALL-REAR NP used on 001E SEE 25-41-51-050 FOR DET		001
-030J	D2549010511864		. . WALL-REAR NP used on 001P SEE 25-41-51-05A FOR DET		001
040A	D2549030506665		. . WALL-SIDE NP used on 001A SEE 25-41-51-06J FOR DET		001
-040B	D2549020506465		. . WALL-SIDE NP used on 001B SEE 25-41-51-06J FOR DET		001

- ITEM NOT ILLUSTRATED

FIG. ITEM	PART NUMBER	AIRLINE STOCK NUMBER	NOMENCLATURE 1234567	EFF CODE	UNITS PER ASSY
-040C	D2549020605465		. . WALL-SIDE NP used on 001C SEE 25-41-51-06K FOR DET		001
-040D	D2549020610865		. . WALL-SIDE NP used on 001D SEE 25-41-51-06K FOR DET		001
-040E	D2549010512265		. . WALL-SIDE NP used on 001E SEE 25-41-51-06K FOR DET		001
-040F	D2549020611065		. . WALL-SIDE NP used on 001F SEE 25-41-51-06J FOR DET		001
-040G	D2549030506865		. . WALL-SIDE NP used on 001G SEE 25-41-51-06G FOR DET		001
-040H	D2549020611465		. . WALL-SIDE NP used on 001H SEE 25-41-51-06J FOR DET		001
-040J	D2549010514065		. . WALL-SIDE NP used on 001J SEE 25-41-51-06K FOR DET		001
-040K	D2549020611865		. . WALL-SIDE NP used on 001K SEE 25-41-51-06H FOR DET		001
-040L	D2549010510665		. . WALL-SIDE NP used on 001L, 001N SEE 25-41-51-06K FOR DET		001
-040M	D2549030504265		. . WALL-SIDE NP used on 001M SEE 25-41-51-06K FOR DET		001

- ITEM NOT ILLUSTRATED

FIG. ITEM	PART NUMBER	AIRLINE STOCK NUMBER	NOMENCLATURE 1234567	EFF CODE	UNITS PER ASSY
-040N	D2549020610865		. . WALL-SIDE NP used on 001P SEE 25-41-51-06K FOR DET		001
050A	D2549020506266		. . HOUSING NP used on 001A, 001B SEE 25-41-51-07D FOR DET		001
-050B	D2549020605466		. . HOUSING NP used on 001C SEE 25-41-51-07E FOR DET		001
-050C	D2549020610866		. . HOUSING NP used on 001D, 001P SEE 25-41-51-07E FOR DET		001
-050D	D2549010509466		. . HOUSING NP used on 001E SEE 25-41-51-07D FOR DET		001
-050E	D2549010511066		. . HOUSING NP used on 001F SEE 25-41-51-07B FOR DET		001
-050F	D2549030505866		. . HOUSING NP used on 001G SEE 25-41-51-07D FOR DET		001
-050G	D2549030505666		. . HOUSING NP used on 001H SEE 25-41-51-07D FOR DET		001
-050H	D2549010514066		. . HOUSING NP used on 001J SEE 25-41-51-07E FOR DET		001
-050J	D2549020607066		. . HOUSING NP used on 001K, 001L, 001M, 001N SEE 25-41-51-07Y FOR DET		001

- ITEM NOT ILLUSTRATED

FIG. ITEM	PART NUMBER	AIRLINE STOCK NUMBER	NOMENCLATURE 1234567	EFF CODE	UNITS PER ASSY
060A	D2549010500069		. . DOOR INSTL NP used on 001A, 001B, 001C, 001D, 001E, 001F, 001G, 001H, 001J, 001K, 001L, 001M, 001N, 001P SEE 25-41-51-100 FOR DET		001
070A	A225400276-504		. . DOOR ASSY-SINGLE used on 001A, 001B SEE 25-41-51-11B FOR DET		001
-070B	A225400276-534		. . DOOR ASSY-SINGLE used on 001C SEE 25-41-51-11D FOR DET		001
-070C	A225400276-916		. . DOOR ASSY-SINGLE used on 001D, 001P SEE 25-41-51-11D FOR DET		001
-070D	A225400276-502		. . DOOR ASSY-SINGLE used on 001E, 001F SEE 25-41-51-11B FOR DET		001
-070E	A225400276-546		. . DOOR ASSY-SINGLE used on 001G SEE 25-41-51-11C FOR DET		001
-070F	A225400276-542		. . DOOR ASSY-SINGLE used on 001H SEE 25-41-51-11B FOR DET		001
-070G	A225400276-558		. . DOOR ASSY-SINGLE used on 001J SEE 25-41-51-11D FOR DET		001
-070H	A225400276-922		. . DOOR ASSY-SINGLE used on 001K SEE 25-41-51-11G FOR DET		001

- ITEM NOT ILLUSTRATED

FIG. ITEM	PART NUMBER	AIRLINE STOCK NUMBER	NOMENCLATURE 1234567		EFF CODE	UNITS PER ASSY
-070J	A225400276-906		. . DOOR ASSY-SINGLE used on 001L, 001N SEE 25-41-51-11C FOR DET			001
-070K	A225400276-574		. . DOOR ASSY-SINGLE used on 001M SEE 25-41-51-11E FOR DET			001
080A	D2549020506271		. . TOILET UNIT AND TOILET SHROUD used on 001A, 001B SEE 25-41-51-12C FOR DET	NP		001
-080B	D2549020605471		. . TOILET UNIT AND TOILET SHROUD used on 001C, 001D, 001P SEE 25-41-51-12D FOR DET	NP		001
-080C	D2549010510271		. . TOILET UNIT AND TOILET SHROUD used on 001E, 001H SEE 25-41-51-12C FOR DET	NP		001
-080D	D2549020604271		. . TOILET UNIT AND TOILET SHROUD used on 001F, 001G, 001J, 001K, 001M SEE 25-41-51-12C FOR DET	NP		001
-080E	D2549020607671		. . TOILET UNIT AND TOILET SHROUD used on 001L, 001N SEE 25-41-51-12C FOR DET	NP		001
090A	D2549020506272		. . PAN-FLOOR used on 001A, 001B SEE 25-41-51-13B FOR DET	NP		001
-090B	D2549030506272		. . PAN-FLOOR used on 001C, 001D SEE 25-41-51-13B FOR DET	NP		001

- ITEM NOT ILLUSTRATED

FIG. ITEM	PART NUMBER	AIRLINE STOCK NUMBER	NOMENCLATURE 1234567	EFF CODE	UNITS PER ASSY
-090C	D2549010509472		. . PAN-FLOOR NP used on 001E SEE 25-41-51-13B FOR DET		001
-090D	D2549020604872		. . PAN-FLOOR NP used on 001F, 001L, 001N SEE 25-41-51-13C FOR DET		001
-090E	D2549020610472		. . PAN-FLOOR NP used on 001G SEE 25-41-51-13C FOR DET		001
-090F	D2549030504072		. . PAN-FLOOR NP used on 001H, 001K SEE 25-41-51-13B FOR DET		001
-090G	D2549020610672		. . PAN-FLOOR NP used on 001J SEE 25-41-51-13C FOR DET		001
-090H	D2549020606072		. . PAN-FLOOR NP used on 001M SEE 25-41-51-13C FOR DET		001
-090J	D2549020701472		. . PAN-FLOOR NP POST SB 25-1289 used on 001P SEE 25-41-51-13V FOR DET		001
100A	D2549020602873		. . LIGHT-DOOR NP used on 001A, 001B SEE 25-41-51-140 FOR DET		001
-100B	D2549020602673		. . LIGHT-DOOR NP used on 001C, 001D, 001E, 001F, 001G, 001K, 001P SEE 25-41-51-140 FOR DET		001
-100C	D2549030505673		. . LIGHT-DOOR NP used on 001H SEE 25-41-51-140 FOR DET		001

- ITEM NOT ILLUSTRATED

FIG. ITEM	PART NUMBER	AIRLINE STOCK NUMBER	NOMENCLATURE 1234567		EFF CODE	UNITS PER ASSY
-100D	D2549010512673		. . LIGHT-DOOR used on 001L, 001M, 001N SEE 25-41-51-140 FOR DET	NP		001
-100E	D2549010514073		. . LIGHT-DOOR used on 001J SEE 25-41-51-14A FOR DET	NP		001
110A	D2549030509474		. . WASHBASIN UNIT used on 001A, 001B SEE 25-41-51-15F FOR DET	NP		001
-110B	D2549010511074		. . WASHBASIN UNIT used on 001C, 001D, 001E, 001F, 001H, 001K, 001P SEE 25-41-51-15C FOR DET	NP		001
-110C	D2549020614474		. . WASHBASIN UNIT used on 001G SEE 25-41-51-15F FOR DET	NP		001
-110D	D2549010514074		. . WASHBASIN UNIT used on 001J SEE 25-41-51-15F FOR DET	NP		001
-110E	D2549010510674		. . WASHBASIN UNIT used on 001L, 001M, 001N SEE 25-41-51-15F FOR DET	NP		001
120A	D2549030505475		. . DOOR ASSY-WASHBASIN UNIT used on 001A, 001B SEE 25-41-51-16B FOR DET	NP		001
-120B	D2549020607675		. . DOOR ASSY-WASHBASIN UNIT used on 001L, 001N SEE 25-41-51-16C FOR DET	NP		001

- ITEM NOT ILLUSTRATED

FIG. ITEM	PART NUMBER	AIRLINE STOCK NUMBER	NOMENCLATURE 1234567	EFF CODE	UNITS PER ASSY
-120C	D2549020605475		. . DOOR ASSY-WASHBASIN UNIT NP used on 001C, 001D, 001P SEE 25-41-51-16C FOR DET		001
-120D	D2549010509475		. . DOOR ASSY-WASHBASIN UNIT NP used on 001E, 001H SEE 25-41-51-16B FOR DET		001
-120E	D2549020607075		. . DOOR ASSY-WASHBASIN UNIT NP used on 001F, 001G, 001J, 001K, 001M SEE 25-41-51-16B FOR DET		001
130A	D2549020506276		. . PANEL ASSY-WASHBASIN UNIT NP used on 001A, 001B SEE 25-41-51-17C FOR DET		001
-130B	D2549020605476		. . PANEL ASSY-WASHBASIN UNIT NP used on 001C, 001D, 001P SEE 25-41-51-17D FOR DET		001
-130C	D2549010509476		. . PANEL ASSY-WASHBASIN UNIT NP used on 001E, 001H SEE 25-41-51-17C FOR DET		001
-130D	D2549010510876		. . PANEL ASSY-WASHBASIN UNIT NP used on 001F SEE 25-41-51-17C FOR DET		001
-130E	D2549030504876		. . PANEL ASSY-WASHBASIN UNIT NP used on 001G, 001J, 001K, 001M SEE 25-41-51-17C FOR DET		001

- ITEM NOT ILLUSTRATED

FIG. ITEM	PART NUMBER	AIRLINE STOCK NUMBER	NOMENCLATURE 1234567		EFF CODE	UNITS PER ASSY
-130F	D2549020607676		. . PANEL ASSY-WASHBASIN UNIT used on 001L, 001N SEE 25-41-51-17C FOR DET	NP		001
140A	D2549020506277		. . BIN-WASTE,CHUTE-WASTE AND EXTINGUISHER-FIRE used on 001A, 001B SEE 25-41-51-180 FOR DET	NP		001
-140B	D2549030504877		. . BIN-WASTE,CHUTE-WASTE AND EXTINGUISHER-FIRE used on 001C, 001D, 001F, 001G, 001H, 001J, 001K, 001L, 001M, 001N, 001P SEE 25-41-51-180 FOR DET	NP		001
-140C	D2549010509477		. . BIN-WASTE,CHUTE-WASTE AND EXTINGUISHER-FIRE used on 001E SEE 25-41-51-180 FOR DET	NP		001
150A	D2549030505478		. . CABINET-SERVICE used on 001A SEE 25-41-51-19E FOR DET	NP		001
-150B	D2549020506278		. . CABINET-SERVICE used on 001B SEE 25-41-51-19E FOR DET	NP		001
-150C	D2549030504878		. . CABINET-SERVICE used on 001C, 001D, 001F, 001K, 001L, 001M, 001N, 001P SEE 25-41-51-19E FOR DET	NP		001
-150D	D2549010509478		. . CABINET-SERVICE used on 001E SEE 25-41-51-19E FOR DET	NP		001

- ITEM NOT ILLUSTRATED

FIG. ITEM	PART NUMBER	AIRLINE STOCK NUMBER	NOMENCLATURE 1234567	EFF CODE	UNITS PER ASSY
-150E	D2549030505878		. . CABINET-SERVICE NP used on 001G SEE 25-41-51-19E FOR DET		001
-150F	D2549030505678		. . CABINET-SERVICE NP used on 001H SEE 25-41-51-19E FOR DET		001
-150G	D2549010514078		. . CABINET-SERVICE NP used on 001J SEE 25-41-51-19E FOR DET		001
160A	D2549020500079		. . TABLE-NURSING NP used on 001A, 001B SEE 25-41-51-200 FOR DET		001
-160B	D2549010500479		. . TABLE-NURSING NP used on 001C, 001D, 001F, 001G, 001K, 001P SEE 25-41-51-200 FOR DET		001
-160C	D2549030505679		. . TABLE-NURSING NP used on 001H SEE 25-41-51-200 FOR DET		001
-160D	D2549010514079		. . TABLE-NURSING NP used on 001J SEE 25-41-51-20A FOR DET		001
-160E	D2549010510679		. . TABLE-NURSING NP used on 001E, 001L, 001N SEE 25-41-51-20A FOR DET		001
-160F	D2549010512679		. . TABLE-NURSING NP used on 001M SEE 25-41-51-20A FOR DET		001
170A	D2549020506280		. . VENTILATION SYSTEM NP used on 001A, 001B SEE 25-41-51-210 FOR DET		001

- ITEM NOT ILLUSTRATED

FIG. ITEM	PART NUMBER	AIRLINE STOCK NUMBER	NOMENCLATURE 1234567		EFF CODE	UNITS PER ASSY
-170B	D2549030504880		. . VENTILATION SYSTEM used on 001C, 001D, 001F, 001G, 001K, 001P SEE 25-41-51-210 FOR DET	NP		001
-170C	D2549010509480		. . VENTILATION SYSTEM used on 001E SEE 25-41-51-210 FOR DET	NP		001
-170D	D2549030505680		. . VENTILATION SYSTEM used on 001H SEE 25-41-51-210 FOR DET	NP		001
-170E	D2549010514280		. . VENTILATION SYSTEM used on 001L, 001M, 001N SEE 25-41-51-21A FOR DET	NP		001
-170F	D2549010514080		. . VENTILATION SYSTEM used on 001J SEE 25-41-51-21A FOR DET	NP		001
180A	D2549030505481		. . WATER SYSTEM-POTABLE used on 001A SEE 25-41-51-22E FOR DET	NP		001
-180B	D2549020506281		. . WATER SYSTEM-POTABLE used on 001B, 001J SEE 25-41-51-22E FOR DET	NP		001
-180C	D2549030504881		. . WATER SYSTEM-POTABLE used on 001C, 001D, 001E, 001F, 001G, 001H, 001K, 001L, 001M, 001N, 001P SEE 25-41-51-22D FOR DET	NP		001
190A	D2549020506282		. . WATER SYSTEM-WASTE used on 001A, 001B SEE 25-41-51-23B FOR DET	NP		001

- ITEM NOT ILLUSTRATED

FIG. ITEM	PART NUMBER	AIRLINE STOCK NUMBER	NOMENCLATURE 1234567	EFF CODE	UNITS PER ASSY
-190B	D2549010511082		. . WATER SYSTEM-WASTE NP used on 001C, 001D, 001E, 001F, 001H, 001M, 001P SEE 25-41-51-23B FOR DET		001
-190C	D2549030504882		. . WATER SYSTEM-WASTE NP used on 001G, 001K SEE 25-41-51-23B FOR DET		001
-190D	D2549010514082		. . WATER SYSTEM-WASTE NP used on 001J SEE 25-41-51-23B FOR DET		001
-190E	D2549030504082		. . WATER SYSTEM-WASTE NP used on 001L, 001N SEE 25-41-51-23B FOR DET		001
200A	D2549020506283		. . ELECTRICAL SYSTEM NP used on 001A, 001B, 001J SEE 25-41-51-26C FOR DET		001
-200B	D2549030504883		. . ELECTRICAL SYSTEM NP used on 001C, 001D, 001F, 001G, 001H, 001K, 001L, 001M, 001P SEE 25-41-51-26C FOR DET		001
-200C	D2549010509483		. . ELECTRICAL SYSTEM NP used on 001E SEE 25-41-51-26C FOR DET		001
-200D	D2549030413483		. . ELECTRICAL SYSTEM NP POST SB 26-1058 used on 001N SEE 25-41-51-26C FOR DET		001

- ITEM NOT ILLUSTRATED

THIS PAGE IS INTENTIONALLY LEFT BLANK

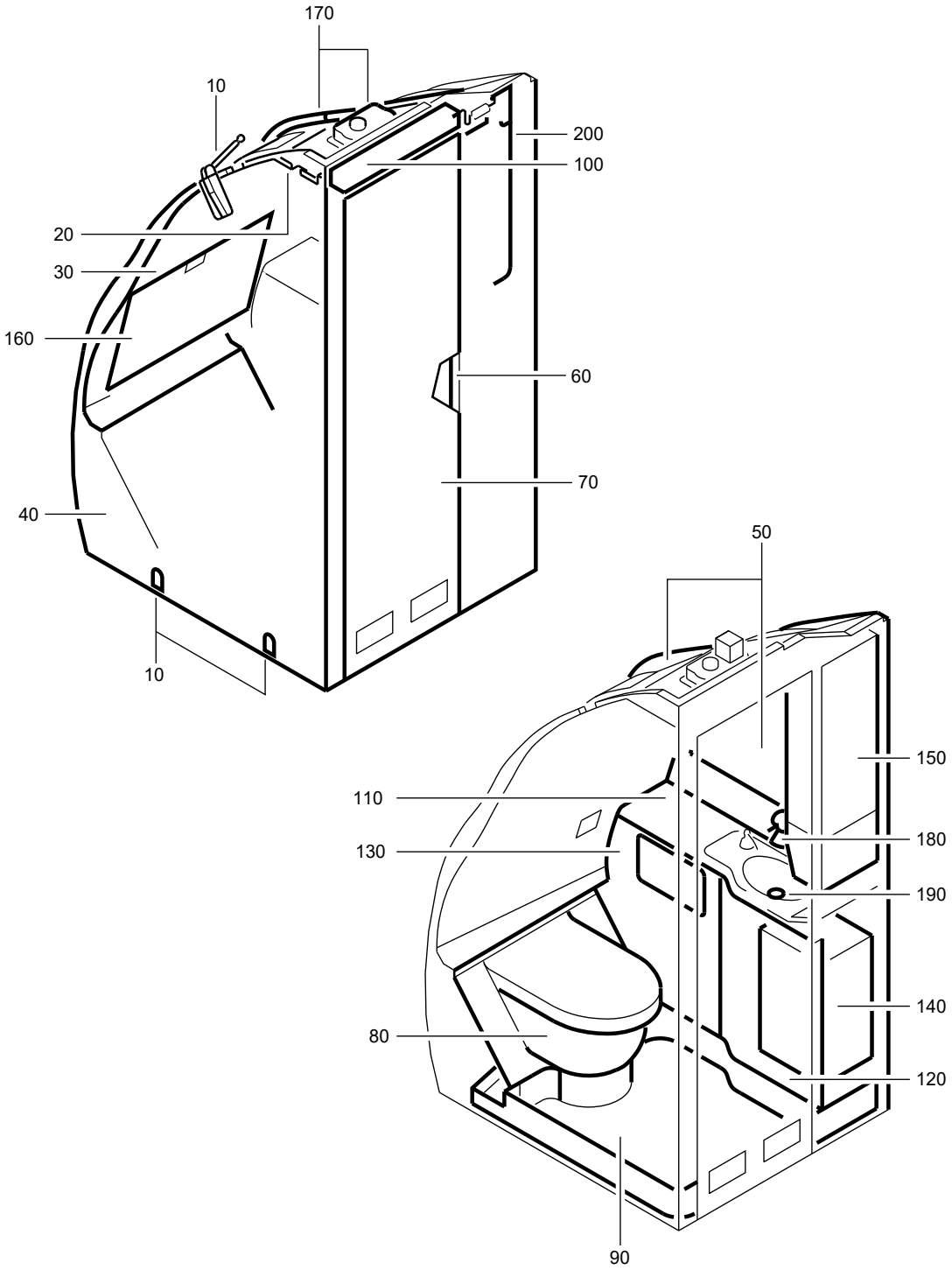

F_PL_254151_01_Q_01_00

LAVATORY A ASSY
Figure 01Q/EN254151SHEET01Q01

FIG. ITEM	PART NUMBER	AIRLINE STOCK NUMBER	NOMENCLATURE 1234567	EFF CODE	UNITS PER ASSY
01Q					
-001A	D2549030508400		. LAVATORY A ASSY SEE SIL 25-117 FOR DET		RF
-001B	D2549020613600		. LAVATORY A ASSY PRE VSB A2-254-25-046 SEE SIL 25-117 FOR DET		RF
-001C	D2549030509000		. LAVATORY A ASSY SEE SIL 25-117 FOR DET		RF
-001D	D2549030509400		. LAVATORY A ASSY SEE SIL 25-117 FOR DET		RF
-001E	D2549030508200		. LAVATORY A ASSY PRE VSB A2-254-25-080 SEE SIL 25-117 FOR DET		RF
-001F	D2549010600200		. LAVATORY A ASSY PRE VSB A2-254-25-037 SEE SIL 25-117 FOR DET		RF
-001G	D2549010601000		. LAVATORY A ASSY SEE SIL 25-117 FOR DET		RF
-001H	D2549020506600		. LAVATORY A ASSY SEE SIL 25-117 FOR DET		RF
-001J	D2549030508600		. LAVATORY A ASSY SEE SIL 25-117 FOR DET		RF
-001K	D2549020614600		. LAVATORY A ASSY SEE SIL 25-117 FOR DET		RF
-001L	D2549010514400		. LAVATORY A ASSY SEE SIL 25-117 FOR DET		RF
-001M	D2549010600000		. LAVATORY A ASSY SEE SIL 25-117 FOR DET		RF

- ITEM NOT ILLUSTRATED

FIG. ITEM	PART NUMBER	AIRLINE STOCK NUMBER	NOMENCLATURE 1234567		EFF CODE	UNITS PER ASSY
-001N	R225401175-002		. LAVATORY A ASSY POST VSB A2-254-25-037 SEE SIL 25-117 FOR DET			RF
-001P	R225401172-004		. LAVATORY A ASSY POST VSB A2-254-25-080 SEE SIL 25-117 FOR DET			RF
-001Q	R225401134-006		. LAVATORY A ASSY POST VSB A2-254-25-046			RF
010A	D2549030506061		. . ATTACHMENT-LAVATORY used on 001A SEE 25-41-51-020 FOR DET	NP		001
-010B	D2549020602861		. . ATTACHMENT-LAVATORY used on 001B, 001D, 001Q SEE 25-41-51-020 FOR DET	NP		001
-010C	D2549020602661		. . ATTACHMENT-LAVATORY used on 001E, 001G, 001H, 001K, 001L, 001M, 001P SEE 25-41-51-020 FOR DET	NP		001
-010D	D2549010513861		. . ATTACHMENT-LAVATORY used on 001F, 001N SEE 25-41-51-020 FOR DET	NP		001
-010E	D2549030507261		. . ATTACHMENT-LAVATORY used on 001J SEE 25-41-51-020 FOR DET	NP		001
-010F	D2549020610061		. . ATTACHMENT-LAVATORY used on 001C SEE 25-41-51-02D FOR DET	NP		001
020A	D2549030506063		. . PANEL-CEILING used on 001A SEE 25-41-51-040 FOR DET	NP		001

- ITEM NOT ILLUSTRATED

FIG. ITEM	PART NUMBER	AIRLINE STOCK NUMBER	NOMENCLATURE 1234567		EFF CODE	UNITS PER ASSY
-020B	D2549020602863		. . PANEL-CEILING used on 001B, 001D, 001Q SEE 25-41-51-040 FOR DET	NP		001
-020C	D2549020602663		. . PANEL-CEILING used on 001C, 001E, 001G, 001H, 001K, 001L, 001M, 001P SEE 25-41-51-040 FOR DET	NP		001
-020D	D2549010513863		. . PANEL-CEILING used on 001F, 001N SEE 25-41-51-040 FOR DET	NP		001
-020E	D2549030507263		. . PANEL-CEILING used on 001J SEE 25-41-51-040 FOR DET	NP		001
030A	D2549030508464		. . WALL-REAR used on 001A SEE 25-41-51-05B FOR DET	NP		001
-030B	D2549020613664		. . WALL-REAR used on 001B, 001Q SEE 25-41-51-05B FOR DET	NP		001
-030C	D2549010512664		. . WALL-REAR used on 001E, 001H, 001K, 001P SEE 25-41-51-05B FOR DET	NP		001
-030D	D2549030509464		. . WALL-REAR used on 001D SEE 25-41-51-05D FOR DET	NP		001
-030E	D2549010600264		. . WALL-REAR used on 001F, 001N SEE 25-41-51-05D FOR DET	NP		001
-030F	D2549030508664		. . WALL-REAR used on 001J SEE 25-41-51-05B FOR DET	NP		001

- ITEM NOT ILLUSTRATED

FIG. ITEM	PART NUMBER	AIRLINE STOCK NUMBER	NOMENCLATURE 1234567		EFF CODE	UNITS PER ASSY
-030G	D2549010514464		. . WALL-REAR used on 001L, 001M SEE 25-41-51-05B FOR DET	NP		001
-030H	D2549010501064		. . WALL-REAR used on 001C SEE 25-41-51-05A FOR DET	NP		001
-030J	D2549020611664		. . WALL-REAR used on 001G SEE 25-41-51-05A FOR DET	NP		001
040A	D2549030508465		. . WALL-SIDE used on 001A SEE 25-41-51-06K FOR DET	NP		001
-040B	D2549020613665		. . WALL-SIDE used on 001B, 001Q SEE 25-41-51-06K FOR DET	NP		001
-040C	D2549010502065		. . WALL-SIDE used on 001C SEE 25-41-51-48E FOR DET	NP		001
-040D	D2549030509465		. . WALL-SIDE used on 001D SEE 25-41-51-06K FOR DET	NP		001
-040E	D2549030508265		. . WALL-SIDE PRE VSB A2-254-25-080 used on 001E SEE 25-41-51-06K FOR DET	NP		001
-040F	D2549010600265		. . WALL-SIDE PRE VSB A2-254-25-037 used on 001F SEE 25-41-51-06L FOR DET	NP		001
-040G	D2549010509065		. . WALL-SIDE used on 001G SEE 25-41-51-48E FOR DET	NP		001

- ITEM NOT ILLUSTRATED

FIG. ITEM	PART NUMBER	AIRLINE STOCK NUMBER	NOMENCLATURE 1234567		EFF CODE	UNITS PER ASSY
-040H	D2549020506665		. . WALL-SIDE used on 001H SEE 25-41-51-06L FOR DET	NP		001
-040J	D2549030508665		. . WALL-SIDE used on 001J SEE 25-41-51-06L FOR DET	NP		001
-040K	D2549020614665		. . WALL-SIDE used on 001K SEE 25-41-51-06L FOR DET	NP		001
-040L	D2549010514465		. . WALL-SIDE used on 001L SEE 25-41-51-06L FOR DET	NP		001
-040M	D2549010600065		. . WALL-SIDE used on 001M SEE 25-41-51-06L FOR DET	NP		001
-040N	R22540117500265		. . WALL-SIDE POST VSB A2-254-25-037 used on 001N SEE 25-41-51-06L FOR DET	NP		001
-040P	R22540117200465		. . WALL-SIDE POST VSB A2-254-25-080 used on 001P SEE 25-41-51-06K FOR DET	NP		001
050A	D2549030506066		. . HOUSING used on 001A SEE 25-41-51-07C FOR DET	NP		001
-050B	D2549020605666		. . HOUSING used on 001B, 001Q SEE 25-41-51-07D FOR DET	NP		001
-050C	D2549010501066		. . HOUSING used on 001C SEE 25-41-51-07Y FOR DET	NP		001

- ITEM NOT ILLUSTRATED

FIG. ITEM	PART NUMBER	AIRLINE STOCK NUMBER	NOMENCLATURE 1234567		EFF CODE	UNITS PER ASSY
-050D	D2549020506266		. . HOUSING used on 001D SEE 25-41-51-07D FOR DET	NP		001
-050E	D2549020607066		. . HOUSING used on 001E, 001P SEE 25-41-51-07Y FOR DET	NP		001
-050F	D2549010513866		. . HOUSING used on 001F, 001N SEE 25-41-51-07E FOR DET	NP		001
-050G	D2549010513266		. . HOUSING used on 001H SEE 25-41-51-07E FOR DET	NP		001
-050H	D2549030507266		. . HOUSING used on 001J SEE 25-41-51-07E FOR DET	NP		001
-050J	D2549020614666		. . HOUSING used on 001K SEE 25-41-51-07F FOR DET	NP		001
-050K	D2549020604266		. . HOUSING used on 001L SEE 25-41-51-07D FOR DET	NP		001
-050L	D2549010509866		. . HOUSING used on 001M SEE 25-41-51-07D FOR DET	NP		001
-050M	D2549010601066		. . HOUSING used on 001G SEE 25-41-51-07G FOR DET	NP		001
060A	D2549010500069		. . DOOR INSTL used on 001B, 001C, 001D, 001E, 001F, 001H, 001J, 001K, 001L, 001M, 001N, 001P, 001Q SEE 25-41-51-100 FOR DET	NP		001

- ITEM NOT ILLUSTRATED

FIG. ITEM	PART NUMBER	AIRLINE STOCK NUMBER	NOMENCLATURE 1234567	EFF CODE	UNITS PER ASSY
-060B	D2549020401269		. . DOOR INSTL NP POST SB 25-1314 used on 001A, 001G SEE 25-41-51-10A FOR DET		001
070A	A2254002768930		. . DOOR ASSY-SINGLE POST SB 25-1314 used on 001A SEE 25-41-51-11N FOR DET		001
-070B	A225400276-536		. . DOOR ASSY-SINGLE used on 001B, 001Q SEE 25-41-51-11C FOR DET		001
-070C	A225400276-512		. . DOOR ASSY-SINGLE used on 001C SEE 25-41-51-11C FOR DET		001
-070D	A225400276-590		. . DOOR ASSY-SINGLE used on 001D SEE 25-41-51-11E FOR DET		001
-070E	A225400276-934		. . DOOR ASSY-SINGLE used on 001E, 001P SEE 25-41-51-11F FOR DET		001
-070F	A225400276-564		. . DOOR ASSY-SINGLE used on 001F, 001N SEE 25-41-51-11E FOR DET		001
-070G	A225400276-506		. . DOOR ASSY-SINGLE used on 001H SEE 25-41-51-11D FOR DET		001
-070H	A225400276-932		. . DOOR ASSY-SINGLE used on 001J SEE 25-41-51-11D FOR DET		001
-070J	A225400276-908		. . DOOR ASSY-SINGLE used on 001K SEE 25-41-51-11C FOR DET		001

- ITEM NOT ILLUSTRATED

FIG. ITEM	PART NUMBER	AIRLINE STOCK NUMBER	NOMENCLATURE 1234567		EFF CODE	UNITS PER ASSY
-070K	A225400276-562		. . DOOR ASSY-SINGLE used on 001L SEE 25-41-51-11D FOR DET			001
-070L	A225400276-502		. . DOOR ASSY-SINGLE used on 001M SEE 25-41-51-11B FOR DET			001
-070M	A2254002768506		. . DOOR ASSY-SINGLE used on 001G, 001H SEE 25-41-51-11N FOR DET			001
080A	D2549030506071		. . TOILET UNIT AND TOILET SHROUD used on 001A SEE 25-41-51-12C FOR DET	NP		001
-080B	D2549020506271		. . TOILET UNIT AND TOILET SHROUD used on 001B, 001D, 001Q SEE 25-41-51-12C FOR DET	NP		001
-080C	D2549010510271		. . TOILET UNIT AND TOILET SHROUD used on 001C SEE 25-41-51-12C FOR DET	NP		001
-080D	D2549020604271		. . TOILET UNIT AND TOILET SHROUD used on 001E, 001F, 001M, 001N, 001P SEE 25-41-51-12C FOR DET	NP		001
-080E	D2549010601071		. . TOILET UNIT AND TOILET SHROUD used on 001G, 001H SEE 25-41-51-12D FOR DET	NP		001

- ITEM NOT ILLUSTRATED

FIG. ITEM	PART NUMBER	AIRLINE STOCK NUMBER	NOMENCLATURE 1234567		EFF CODE	UNITS PER ASSY
-080F	D2549030507271		. . TOILET UNIT AND TOILET SHROUD used on 001J SEE 25-41-51-12D FOR DET	NP		001
-080G	D2549030506271		. . TOILET UNIT AND TOILET SHROUD used on 001L SEE 25-41-51-12C FOR DET	NP		001
-080H	D2549020608671		. . TOILET UNIT AND TOILET SHROUD used on 001K SEE 25-41-51-12C FOR DET	NP		001
090A	D2549030411672		. . PAN-FLOOR used on 001A SEE 25-41-51-13R FOR DET	NP		001
-090B	D2549020605672		. . PAN-FLOOR used on 001B, 001Q SEE 25-41-51-13B FOR DET	NP		001
-090C	D2549010502072		. . PAN-FLOOR used on 001C SEE 25-41-51-130 FOR DET	NP		001
-090D	D2549020506272		. . PAN-FLOOR used on 001D SEE 25-41-51-13B FOR DET	NP		001
-090E	D2549030507072		. . PAN-FLOOR used on 001E, 001P SEE 25-41-51-13C FOR DET	NP		001
-090F	D2549010513872		. . PAN-FLOOR used on 001F, 001N SEE 25-41-51-13C FOR DET	NP		001

- ITEM NOT ILLUSTRATED

FIG. ITEM	PART NUMBER	AIRLINE STOCK NUMBER	NOMENCLATURE 1234567	EFF CODE	UNITS PER ASSY
-090G	D2549020608672		. . PAN-FLOOR NP used on 001H, 001K SEE 25-41-51-13B FOR DET		001
-090H	D2549020512472		. . PAN-FLOOR NP used on 001J SEE 25-41-51-13H FOR DET		001
-090J	D2549030505272		. . PAN-FLOOR NP used on 001L SEE 25-41-51-13A FOR DET		001
-090K	D2549030504072		. . PAN-FLOOR NP used on 001M SEE 25-41-51-13B FOR DET		001
-090L	D2549020603272		. . PAN-FLOOR NP used on 001G SEE 25-41-51-13U FOR DET		001
100A	D2549030508473		. . LIGHT-DOOR NP used on 001A SEE 25-41-51-140 FOR DET		001
-100B	D2549020613673		. . LIGHT-DOOR NP used on 001B, 001D, 001Q SEE 25-41-51-140 FOR DET		001
-100C	D2549010512673		. . LIGHT-DOOR NP used on 001C, 001E, 001G, 001H, 001K, 001L, 001M, 001P SEE 25-41-51-140 FOR DET		001
-100D	D2549010600273		. . LIGHT-DOOR NP used on 001F, 001N SEE 25-41-51-14A FOR DET		001
-100E	D2549030508673		. . LIGHT-DOOR NP used on 001J SEE 25-41-51-14A FOR DET		001

- ITEM NOT ILLUSTRATED

FIG. ITEM	PART NUMBER	AIRLINE STOCK NUMBER	NOMENCLATURE 1234567	EFF CODE	UNITS PER ASSY
110A	D2549020704674		. . WASHBASIN UNIT NP used on 001A SEE 25-41-51-15G FOR DET		001
-110B	D2549020613674		. . WASHBASIN UNIT NP used on 001B, 001Q SEE 25-41-51-15F FOR DET		001
-110C	D2549010510674		. . WASHBASIN UNIT NP used on 001C, 001F, 001G, 001H, 001N SEE 25-41-51-15F FOR DET		001
-110D	D2549030509474		. . WASHBASIN UNIT NP used on 001D SEE 25-41-51-15F FOR DET		001
-110E	D2549030508674		. . WASHBASIN UNIT NP used on 001J SEE 25-41-51-15F FOR DET		001
-110F	D2549020614674		. . WASHBASIN UNIT NP used on 001K SEE 25-41-51-15F FOR DET		001
-110G	D2549010514474		. . WASHBASIN UNIT NP used on 001L SEE 25-41-51-15F FOR DET		001
-110H	D2549010600074		. . WASHBASIN UNIT NP used on 001M SEE 25-41-51-15D FOR DET		001
-110J	D2549030508274		. . WASHBASIN UNIT NP used on 001E, 001P SEE 25-41-51-15G FOR DET		001
120A	D2549030506075		. . DOOR ASSY-WASHBASIN UNIT NP used on 001A SEE 25-41-51-16B FOR DET		001

- ITEM NOT ILLUSTRATED

FIG. ITEM	PART NUMBER	AIRLINE STOCK NUMBER	NOMENCLATURE 1234567	EFF CODE	UNITS PER ASSY
-120B	D2549030505475		. . DOOR ASSY-WASHBASIN UNIT NP used on 001B, 001D, 001Q SEE 25-41-51-16B FOR DET		001
-120C	D2549030506275		. . DOOR ASSY-WASHBASIN UNIT NP used on 001L SEE 25-41-51-16C FOR DET		001
-120D	D2549020607075		. . DOOR ASSY-WASHBASIN UNIT NP used on 001E, 001F, 001K, 001M, 001N, 001P SEE 25-41-51-16B FOR DET		001
-120E	D2549010509475		. . DOOR ASSY-WASHBASIN UNIT NP used on 001C, 001G, 001H SEE 25-41-51-16B FOR DET		001
-120F	D2549030507275		. . DOOR ASSY-WASHBASIN UNIT NP used on 001J SEE 25-41-51-16C FOR DET		001
130A	D2549030506076		. . PANEL ASSY-WASHBASIN UNIT NP used on 001A SEE 25-41-51-17C FOR DET		001
-130B	D2549020506276		. . PANEL ASSY-WASHBASIN UNIT NP used on 001B, 001D, 001Q SEE 25-41-51-17C FOR DET		001
-130C	D2549010509476		. . PANEL ASSY-WASHBASIN UNIT NP used on 001C, 001G, 001H SEE 25-41-51-17C FOR DET		001

- ITEM NOT ILLUSTRATED

FIG. ITEM	PART NUMBER	AIRLINE STOCK NUMBER	NOMENCLATURE 1234567		EFF CODE	UNITS PER ASSY
-130D	D2549030504876		. . PANEL ASSY-WASHBASIN UNIT used on 001E, 001F, 001K, 001M, 001N, 001P SEE 25-41-51-17C FOR DET	NP		001
-130E	D2549030507276		. . PANEL ASSY-WASHBASIN UNIT used on 001J SEE 25-41-51-17D FOR DET	NP		001
-130F	D2549010514476		. . PANEL ASSY-WASHBASIN UNIT used on 001L SEE 25-41-51-17D FOR DET	NP		001
140A	D2549030504877		. . BIN-WASTE,CHUTE-WASTE AND EXTINGUISHER-FIRE used on 001A, 001B, 001C, 001E, 001F, 001G, 001H, 001J, 001K, 001L, 001M, 001N, 001P, 001Q SEE 25-41-51-180 FOR DET	NP		001
-140B	D2549020506277		. . BIN-WASTE,CHUTE-WASTE AND EXTINGUISHER-FIRE used on 001D SEE 25-41-51-180 FOR DET	NP		001
150A	D2549030506078		. . CABINET-SERVICE used on 001A SEE 25-41-51-19E FOR DET	NP		001
-150B	D2549020605678		. . CABINET-SERVICE used on 001B, 001Q SEE 25-41-51-19E FOR DET	NP		001
-150C	D2549010510278		. . CABINET-SERVICE used on 001C SEE 25-41-51-19F FOR DET	NP		001

- ITEM NOT ILLUSTRATED

FIG. ITEM	PART NUMBER	AIRLINE STOCK NUMBER	NOMENCLATURE 1234567	EFF CODE	UNITS PER ASSY
-150D	D2549030505478		. . CABINET-SERVICE NP used on 001D SEE 25-41-51-19E FOR DET		001
-150E	D2549030504878		. . CABINET-SERVICE NP PRE VSB A2-254-25-080 used on 001E, 001L SEE 25-41-51-19E FOR DET		001
-150F	D2549010513878		. . CABINET-SERVICE NP PRE VSB A2-254-25-037 used on 001F SEE 25-41-51-19F FOR DET		001
-150G	D2549030504078		. . CABINET-SERVICE NP used on 001G, 001H, 001K, 001M SEE 25-41-51-19E FOR DET		001
-150H	D2549030507278		. . CABINET-SERVICE NP used on 001J SEE 25-41-51-19F FOR DET		001
-150J	R22540117500278		. . CABINET-SERVICE NP POST VSB A2-254-25-037 used on 001N SEE 25-41-51-19F FOR DET		001
-150K	R22540114500278		. . CABINET-SERVICE NP POST VSB A2-254-25-080 used on 001P SEE 25-41-51-19E FOR DET		001
160A	D2549030508479		. . TABLE-NURSING NP used on 001A SEE 25-41-51-20A FOR DET		001
-160B	D2549020613679		. . TABLE-NURSING NP used on 001B, 001D, 001Q SEE 25-41-51-20A FOR DET		001

- ITEM NOT ILLUSTRATED

FIG. ITEM	PART NUMBER	AIRLINE STOCK NUMBER	NOMENCLATURE 1234567		EFF CODE	UNITS PER ASSY
-160C	D2549010512679		. . TABLE-NURSING used on 001C, 001G, 001H, 001L, 001M SEE 25-41-51-20A FOR DET	NP		001
-160D	D2549010510679		. . TABLE-NURSING used on 001E, 001K, 001P SEE 25-41-51-20A FOR DET	NP		001
-160E	D2549010600279		. . TABLE-NURSING used on 001F, 001N SEE 25-41-51-20A FOR DET	NP		001
-160F	D2549030508679		. . TABLE-NURSING used on 001J SEE 25-41-51-20A FOR DET	NP		001
170A	D2549030508480		. . VENTILATION SYSTEM used on 001A SEE 25-41-51-21A FOR DET	NP		001
-170B	D2549020507080		. . VENTILATION SYSTEM used on 001B, 001D, 001Q SEE 25-41-51-21A FOR DET	NP		001
-170C	D2549030504880		. . VENTILATION SYSTEM used on 001M SEE 25-41-51-210 FOR DET	NP		001
-170D	D2549030507680		. . VENTILATION SYSTEM used on 001F, 001N SEE 25-41-51-21A FOR DET	NP		001
-170E	D2549030508680		. . VENTILATION SYSTEM used on 001J SEE 25-41-51-21A FOR DET	NP		001
-170F	D2549010514280		. . VENTILATION SYSTEM used on 001C, 001E, 001G, 001H, 001K, 001L, 001P SEE 25-41-51-21A FOR DET	NP		001

- ITEM NOT ILLUSTRATED

FIG. ITEM	PART NUMBER	AIRLINE STOCK NUMBER	NOMENCLATURE 1234567	EFF CODE	UNITS PER ASSY
180A	D2549030504081		. . WATER SYSTEM-POTABLE NP used on 001A, 001B, 001Q SEE 25-41-51-22G FOR DET		001
-180B	D2549030504881		. . WATER SYSTEM-POTABLE NP used on 001C, 001E, 001F, 001G, 001H, 001J, 001K, 001L, 001M, 001N, 001P SEE 25-41-51-22D FOR DET		001
-180C	D2549030505481		. . WATER SYSTEM-POTABLE NP used on 001D SEE 25-41-51-22E FOR DET		001
190A	D2549030506082		. . WATER SYSTEM-WASTE NP used on 001A SEE 25-41-51-23B FOR DET		001
-190B	D2549020605682		. . WATER SYSTEM-WASTE NP used on 001B, 001Q SEE 25-41-51-23B FOR DET		001
-190C	D2549010511082		. . WATER SYSTEM-WASTE NP used on 001C, 001E, 001F, 001G, 001H, 001J, 001K, 001M, 001N, 001P SEE 25-41-51-23B FOR DET		001
-190D	D2549020506282		. . WATER SYSTEM-WASTE NP used on 001D SEE 25-41-51-23B FOR DET		001
-190E	D2549030504882		. . WATER SYSTEM-WASTE NP used on 001L SEE 25-41-51-23B FOR DET		001
200A	D2549030504883		. . ELECTRICAL SYSTEM NP used on 001A, 001C, 001D, 001F, 001G, 001J, 001L, 001M, 001N SEE 25-41-51-26C FOR DET		001

- ITEM NOT ILLUSTRATED

FIG. ITEM	PART NUMBER	AIRLINE STOCK NUMBER	NOMENCLATURE 1234567		EFF CODE	UNITS PER ASSY
-200B	D2549030507083		. . ELECTRICAL SYSTEM used on 001E, 001P SEE 25-41-51-26C FOR DET	NP		001
-200C	D2549030512083		. . ELECTRICAL SYSTEM used on 001K SEE 25-41-51-26C FOR DET	NP		001
-200D	D2549020605683		. . ELECTRICAL SYSTEM used on 001B, 001H, 001Q SEE 25-41-51-26C FOR DET	NP		001

- ITEM NOT ILLUSTRATED

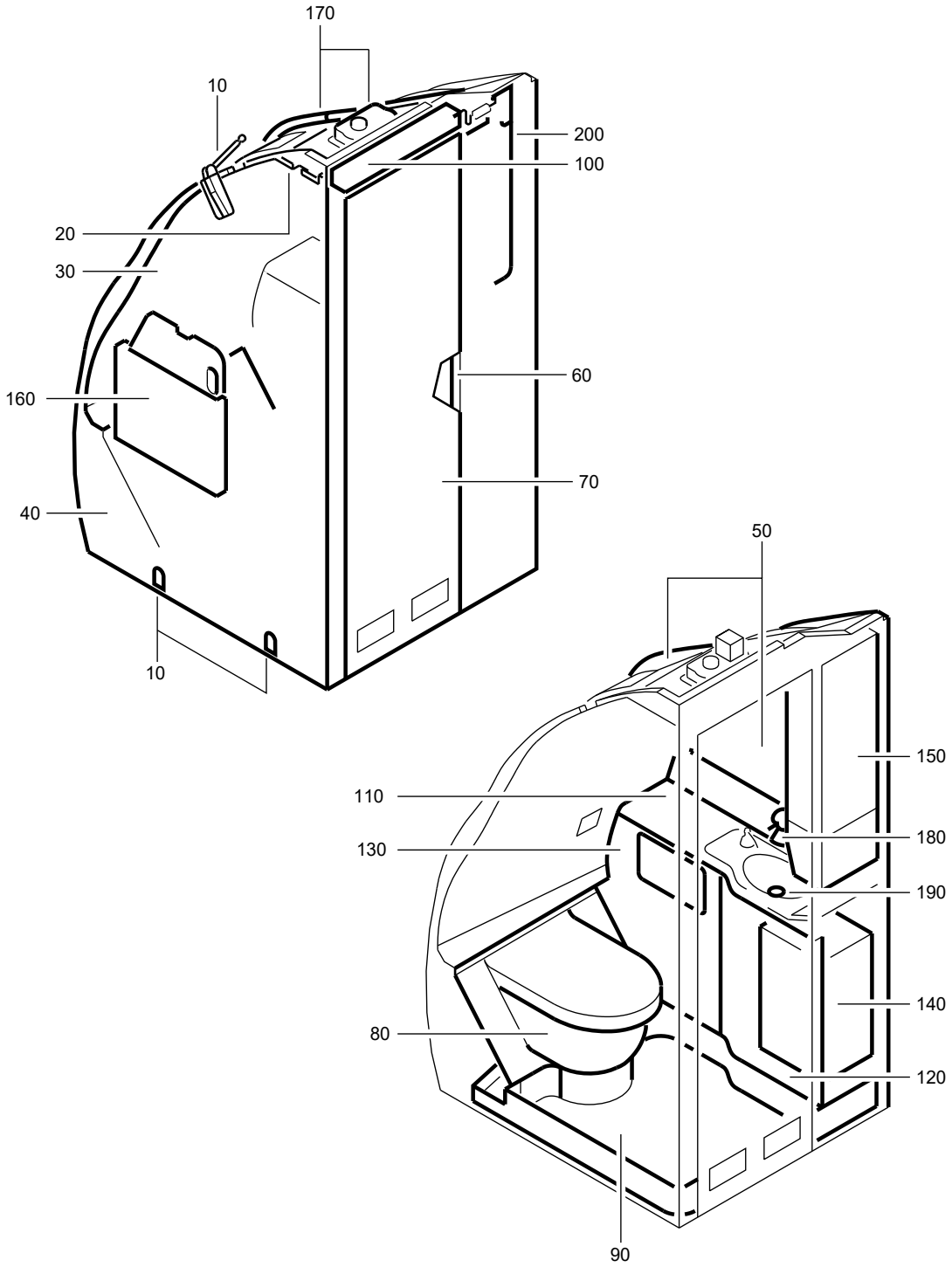

F_PL_254151_01_R_01_00

LAVATORY A ASSY
Figure 01R/EN254151SHEET01R01

FIG. ITEM	PART NUMBER	AIRLINE STOCK NUMBER	NOMENCLATURE 1234567		EFF CODE	UNITS PER ASSY
01R						
-001A	D2549020604600		. LAVATORY A ASSY SEE SIL 25-117 FOR DET			RF
-001B	D2549020506800		. LAVATORY A ASSY SEE SIL 25-117 FOR DET			RF
010A	D2549020602661		. . ATTACHMENT-LAVATORY used on 001A, 001B SEE 25-41-51-020 FOR DET	NP		001
020A	D2549020602663		. . PANEL-CEILING used on 001A, 001B SEE 25-41-51-040 FOR DET	NP		001
030A	D2549020604664		. . WALL-REAR used on 001A SEE 25-41-51-05B FOR DET	NP		001
-030B	R254H155000664		. . WALL-REAR used on 001B SEE 25-41-51-05B FOR DET	NP		001
040A	D2549020604665		. . WALL-SIDE used on 001A SEE 25-41-51-06K FOR DET	NP		001
-040B	D2549020506865		. . WALL-SIDE used on 001B SEE 25-41-51-06L FOR DET	NP		001
050A	D2549020604666		. . HOUSING used on 001A SEE 25-41-51-07F FOR DET	NP		001
-050B	D2549030509066		. . HOUSING used on 001B SEE 25-41-51-07F FOR DET	NP		001

- ITEM NOT ILLUSTRATED

FIG. ITEM	PART NUMBER	AIRLINE STOCK NUMBER	NOMENCLATURE 1234567		EFF CODE	UNITS PER ASSY
060A	D2549010500069		. . DOOR INSTL used on 001A, 001B SEE 25-41-51-100 FOR DET	NP		001
070A	A225400276-526		. . DOOR ASSY-SINGLE used on 001A SEE 25-41-51-11D FOR DET			001
-070B	A225400276-512		. . DOOR ASSY-SINGLE used on 001B SEE 25-41-51-11C FOR DET			001
080A	D2549020604671		. . TOILET UNIT AND TOILET SHROUD used on 001A SEE 25-41-51-12D FOR DET	NP		001
-080B	D2549010510271		. . TOILET UNIT AND TOILET SHROUD used on 001B SEE 25-41-51-12C FOR DET	NP		001
090A	D2549020607072		. . PAN-FLOOR used on 001A SEE 25-41-51-13A FOR DET	NP		001
-090B	D2549010510272		. . PAN-FLOOR used on 001B SEE 25-41-51-13B FOR DET	NP		001
100A	D2549020602673		. . LIGHT-DOOR used on 001A SEE 25-41-51-140 FOR DET	NP		001
-100B	D2549010512673		. . LIGHT-DOOR used on 001B SEE 25-41-51-140 FOR DET	NP		001
110A	D2549010509874		. . WASHBASIN UNIT used on 001A SEE 25-41-51-15D FOR DET	NP		001

- ITEM NOT ILLUSTRATED

FIG. ITEM	PART NUMBER	AIRLINE STOCK NUMBER	NOMENCLATURE 1234567		EFF CODE	UNITS PER ASSY
-110B	D2549010510674		. . WASHBASIN UNIT used on 001B SEE 25-41-51-15F FOR DET	NP		001
120A	D2549020604675		. . DOOR ASSY-WASHBASIN UNIT used on 001A SEE 25-41-51-16C FOR DET	NP		001
-120B	D2549010509475		. . DOOR ASSY-WASHBASIN UNIT used on 001B SEE 25-41-51-16B FOR DET	NP		001
130A	D2549020604676		. . PANEL ASSY-WASHBASIN UNIT used on 001A SEE 25-41-51-17D FOR DET	NP		001
-130B	D2549010509476		. . PANEL ASSY-WASHBASIN UNIT used on 001B SEE 25-41-51-17C FOR DET	NP		001
140A	D2549030504877		. . BIN-WASTE,CHUTE-WASTE AND EXTINGUISHER-FIRE used on 001A, 001B SEE 25-41-51-180 FOR DET	NP		001
150A	D2549030504078		. . CABINET-SERVICE used on 001A SEE 25-41-51-19E FOR DET	NP		001
-150B	D2549010510278		. . CABINET-SERVICE used on 001B SEE 25-41-51-19F FOR DET	NP		001
160A	D2549010500479		. . TABLE-NURSING used on 001A SEE 25-41-51-200 FOR DET	NP		001

- ITEM NOT ILLUSTRATED

FIG. ITEM	PART NUMBER	AIRLINE STOCK NUMBER	NOMENCLATURE 1234567		EFF CODE	UNITS PER ASSY
-160B	D2549010512679		. . TABLE-NURSING used on 001B SEE 25-41-51-20A FOR DET	NP		001
170A	D2549030504880		. . VENTILATION SYSTEM used on 001A SEE 25-41-51-210 FOR DET	NP		001
-170B	D2549010514280		. . VENTILATION SYSTEM used on 001B SEE 25-41-51-21A FOR DET	NP		001
180A	D2549030504881		. . WATER SYSTEM-POTABLE used on 001A, 001B SEE 25-41-51-22D FOR DET	NP		001
190A	D2549010511082		. . WATER SYSTEM-WASTE used on 001A, 001B SEE 25-41-51-23B FOR DET	NP		001
200A	D2549030504883		. . ELECTRICAL SYSTEM used on 001A, 001B SEE 25-41-51-26C FOR DET	NP		001

- ITEM NOT ILLUSTRATED

THIS PAGE IS INTENTIONALLY LEFT BLANK

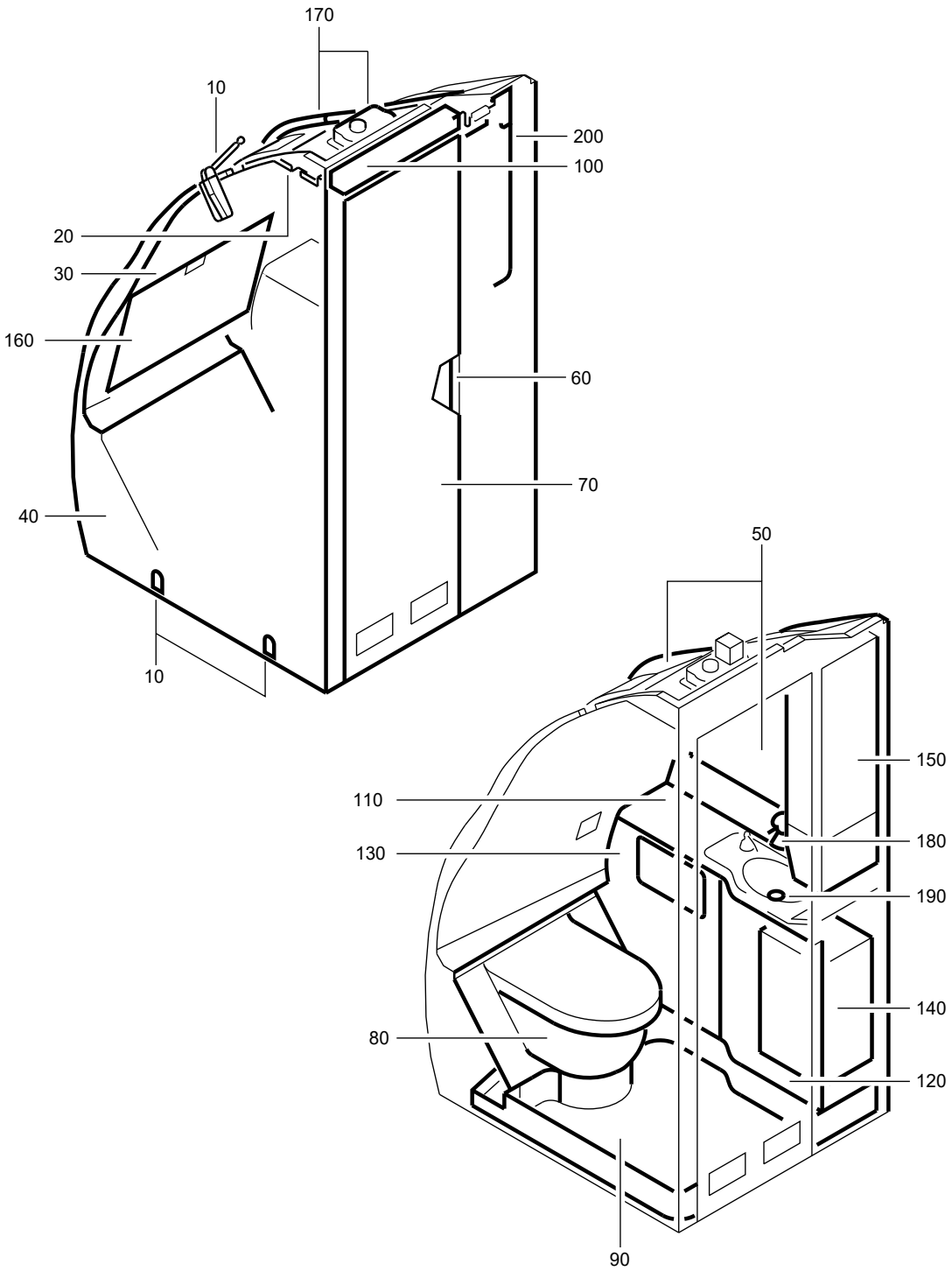

F_PL_254151_01_S_01_00

LAVATORY A ASSY
Figure 01S/EN254151SHEET01S01

FIG. ITEM	PART NUMBER	AIRLINE STOCK NUMBER	NOMENCLATURE 1234567	EFF CODE	UNITS PER ASSY
01S					
-001A	D2549020612200		. LAVATORY A ASSY SEE SIL 25-117 FOR DET		RF
-001B	D2549020614400		. LAVATORY A ASSY SEE SIL 25-117 FOR DET		RF
-001C	D2549030508800		. LAVATORY A ASSY SEE SIL 25-117 FOR DET		RF
-001D	D2549020701800		. LAVATORY A ASSY SEE SIL 25-117 FOR DET		RF
-001E	D2549020612600		. LAVATORY A ASSY SEE SIL 25-117 FOR DET		RF
-001F	D2549030509200		. LAVATORY A ASSY PRE VSB A2-254-25-131 SEE SIL 25-117 FOR DET		RF
-001G	D2549020613000		. LAVATORY A ASSY SEE SIL 25-117 FOR DET		RF
-001H	D2549010600600		. LAVATORY A ASSY SEE SIL 25-117 FOR DET		RF
-001J	D2549030507600		. LAVATORY A ASSY SEE SIL 25-117 FOR DET		RF
-001K	D2549030511800		. LAVATORY A ASSY SEE SIL 25-117 FOR DET		RF
-001L	D2549030508000		. LAVATORY A ASSY SEE SIL 25-117 FOR DET		RF
-001M	D2549020612000		. LAVATORY A ASSY SEE SIL 25-117 FOR DET		RF
-001N	R225401137-004		. LAVATORY A ASSY POST VSB A2-254-25-131		RF

- ITEM NOT ILLUSTRATED

FIG. ITEM	PART NUMBER	AIRLINE STOCK NUMBER	NOMENCLATURE 1234567	EFF CODE	UNITS PER ASSY
010A	D2549020610261		. . ATTACHMENT-LAVATORY NP used on 001A SEE 25-41-51-020 FOR DET		001
-010B	D2549020602661		. . ATTACHMENT-LAVATORY NP used on 001C, 001D, 001E, 001F, 001H, 001J, 001K, 001N SEE 25-41-51-020 FOR DET		001
-010C	D2549020700461		. . ATTACHMENT-LAVATORY NP used on 001L SEE 25-41-51-02A FOR DET		001
-010D	D2549030506061		. . ATTACHMENT-LAVATORY NP used on 001M SEE 25-41-51-020 FOR DET		001
-010E	D2549020610061		. . ATTACHMENT-LAVATORY NP used on 001B, 001G SEE 25-41-51-02D FOR DET		001
020A	D2549020610263		. . PANEL-CEILING NP used on 001A SEE 25-41-51-040 FOR DET		001
-020B	D2549020602663		. . PANEL-CEILING NP used on 001B, 001C, 001D, 001E, 001F, 001G, 001H, 001L, 001M, 001N SEE 25-41-51-040 FOR DET		001
-020C	D2549010513863		. . PANEL-CEILING NP used on 001J, 001K SEE 25-41-51-040 FOR DET		001
030A	D2549020612264		. . WALL-REAR NP used on 001A SEE 25-41-51-05C FOR DET		001

- ITEM NOT ILLUSTRATED

FIG. ITEM	PART NUMBER	AIRLINE STOCK NUMBER	NOMENCLATURE 1234567		EFF CODE	UNITS PER ASSY
-030B	D2549010512664		. . WALL-REAR used on 001B, 001C, 001D, 001E, 001F, 001H, 001L, 001N SEE 25-41-51-05B FOR DET	NP		001
-030C	D2549020611664		. . WALL-REAR used on 001G SEE 25-41-51-05A FOR DET	NP		001
-030D	D2549010600264		. . WALL-REAR used on 001J, 001K SEE 25-41-51-05D FOR DET	NP		001
-030E	D2549030508464		. . WALL-REAR used on 001M SEE 25-41-51-05B FOR DET	NP		001
040A	D2549020612265		. . WALL-SIDE used on 001A SEE 25-41-51-06L FOR DET	NP		001
-040B	D2549020614465		. . WALL-SIDE used on 001B SEE 25-41-51-06L FOR DET	NP		001
-040C	D2549030508865		. . WALL-SIDE used on 001C, 001D SEE 25-41-51-06L FOR DET	NP		001
-040D	D2549020612665		. . WALL-SIDE used on 001E SEE 25-41-51-06L FOR DET	NP		001
-040E	D2549030509265		. . WALL-SIDE used on 001F, 001N SEE 25-41-51-06M FOR DET	NP		001
-040F	D2549010600665		. . WALL-SIDE used on 001H SEE 25-41-51-06M FOR DET	NP		001

- ITEM NOT ILLUSTRATED

FIG. ITEM	PART NUMBER	AIRLINE STOCK NUMBER	NOMENCLATURE 1234567	EFF CODE	UNITS PER ASSY
-040G	D2549020613065		. . WALL-SIDE NP used on 001G SEE 25-41-51-06M FOR DET		001
-040H	D2549010600265		. . WALL-SIDE NP used on 001J SEE 25-41-51-06L FOR DET		001
-040J	D2549030511865		. . WALL-SIDE NP used on 001K SEE 25-41-51-06M FOR DET		001
-040K	D2549030508065		. . WALL-SIDE NP used on 001L SEE 25-41-51-06M FOR DET		001
-040L	D2549030508465		. . WALL-SIDE NP used on 001M SEE 25-41-51-06K FOR DET		001
050A	D2549020610266		. . HOUSING NP used on 001A SEE 25-41-51-07E FOR DET		001
-050B	D2549030505866		. . HOUSING NP used on 001B SEE 25-41-51-07D FOR DET		001
-050C	D2549030504866		. . HOUSING NP used on 001C, 001D SEE 25-41-51-07B FOR DET		001
-050D	D2549010511466		. . HOUSING NP used on 001E SEE 25-41-51-07C FOR DET		001
-050E	D2549030505266		. . HOUSING NP used on 001F, 001N SEE 25-41-51-07B FOR DET		001

- ITEM NOT ILLUSTRATED

FIG. ITEM	PART NUMBER	AIRLINE STOCK NUMBER	NOMENCLATURE 1234567		EFF CODE	UNITS PER ASSY
-050F	D2549020611666		. . HOUSING used on 001G SEE 25-41-51-07E FOR DET	NP		001
-050G	D2549010600666		. . HOUSING used on 001H SEE 25-41-51-07F FOR DET	NP		001
-050H	D2549010513866		. . HOUSING used on 001J, 001K SEE 25-41-51-07E FOR DET	NP		001
-050J	D2549020607666		. . HOUSING used on 001L SEE 25-41-51-07D FOR DET	NP		001
-050K	D2549030506066		. . HOUSING used on 001M SEE 25-41-51-07C FOR DET	NP		001
060A	D2549010500069		. . DOOR INSTL used on 001A, 001B, 001C, 001D, 001E, 001F, 001G, 001H, 001J, 001K, 001L, 001N SEE 25-41-51-100 FOR DET	NP		001
-060B	D2549020401269		. . DOOR INSTL POST SB 25-1314 used on 001M SEE 25-41-51-10A FOR DET	NP		001
070A	A225400276-940		. . DOOR ASSY-SINGLE used on 001A SEE 25-41-51-11F FOR DET			001
-070B	A225400276-588		. . DOOR ASSY-SINGLE used on 001B SEE 25-41-51-11F FOR DET			001

- ITEM NOT ILLUSTRATED

FIG. ITEM	PART NUMBER	AIRLINE STOCK NUMBER	NOMENCLATURE 1234567	EFF CODE	UNITS PER ASSY
-070C	A225400276-568		. . DOOR ASSY-SINGLE used on 001C, 001D SEE 25-41-51-11G FOR DET		001
-070D	A225400276-544		. . DOOR ASSY-SINGLE used on 001E SEE 25-41-51-11C FOR DET		001
-070E	A225400276-586		. . DOOR ASSY-SINGLE used on 001F, 001N SEE 25-41-51-11E FOR DET		001
-070F	A225400276-554		. . DOOR ASSY-SINGLE used on 001G SEE 25-41-51-11D FOR DET		001
-070G	A225400276-584		. . DOOR ASSY-SINGLE used on 001H SEE 25-41-51-11F FOR DET		001
-070H	A225400276-574		. . DOOR ASSY-SINGLE used on 001J, 001K SEE 25-41-51-11E FOR DET		001
-070J	A225400276-560		. . DOOR ASSY-SINGLE used on 001L SEE 25-41-51-11E FOR DET		001
-070K	A2254002768930		. . DOOR ASSY-SINGLE POST SB 25-1314 used on 001M SEE 25-41-51-11N FOR DET		001
080A	D2549020610271		. . TOILET UNIT AND TOILET SHROUD NP used on 001A SEE 25-41-51-12C FOR DET		001

- ITEM NOT ILLUSTRATED

FIG. ITEM	PART NUMBER	AIRLINE STOCK NUMBER	NOMENCLATURE 1234567		EFF CODE	UNITS PER ASSY
-080B	D2549020604271		. . TOILET UNIT AND TOILET SHROUD used on 001B, 001C, 001D, 001F, 001G, 001H, 001J, 001K, 001L, 001N SEE 25-41-51-12C FOR DET	NP		001
-080C	D2549010511471		. . TOILET UNIT AND TOILET SHROUD used on 001E SEE 25-41-51-12C FOR DET	NP		001
-080D	D2549030506071		. . TOILET UNIT AND TOILET SHROUD used on 001M SEE 25-41-51-12C FOR DET	NP		001
090A	D2549020610272		. . PAN-FLOOR used on 001A SEE 25-41-51-13C FOR DET	NP		001
-090B	D2549020610472		. . PAN-FLOOR used on 001B SEE 25-41-51-13C FOR DET	NP		001
-090C	D2549030506272		. . PAN-FLOOR used on 001C, 001D SEE 25-41-51-13B FOR DET	NP		001
-090D	D2549030504072		. . PAN-FLOOR used on 001E, 001L SEE 25-41-51-13B FOR DET	NP		001
-090E	D2549020610672		. . PAN-FLOOR PRE VSB A2-254-25-131 used on 001F SEE 25-41-51-13C FOR DET	NP		001
-090F	D2549020808872		. . PAN-FLOOR used on 001G SEE 25-41-51-13J FOR DET	NP		001

- ITEM NOT ILLUSTRATED

FIG. ITEM	PART NUMBER	AIRLINE STOCK NUMBER	NOMENCLATURE 1234567	EFF CODE	UNITS PER ASSY
-090G	D2549020604872		. . PAN-FLOOR NP used on 001H SEE 25-41-51-13C FOR DET		001
-090H	D2549010513872		. . PAN-FLOOR NP used on 001J, 001K SEE 25-41-51-13C FOR DET		001
-090J	D2549030411672		. . PAN-FLOOR NP used on 001M SEE 25-41-51-13R FOR DET		001
-090K	R22540113700072		. . PAN-FLOOR NP POST VSB A2-254-25-131 used on 001N SEE 25-41-51-13C FOR DET		001
100A	D2549020612273		. . LIGHT-DOOR NP used on 001A SEE 25-41-51-14A FOR DET		001
-100B	D2549010512673		. . LIGHT-DOOR NP used on 001B, 001C, 001D, 001E, 001F, 001G, 001H, 001L, 001N SEE 25-41-51-140 FOR DET		001
-100C	D2549010600273		. . LIGHT-DOOR NP used on 001J, 001K SEE 25-41-51-14A FOR DET		001
-100D	D2549030508473		. . LIGHT-DOOR NP used on 001M SEE 25-41-51-140 FOR DET		001
110A	D2549010514074		. . WASHBASIN UNIT NP used on 001A, 001C, 001D, 001F, 001N SEE 25-41-51-15F FOR DET		001

- ITEM NOT ILLUSTRATED

FIG. ITEM	PART NUMBER	AIRLINE STOCK NUMBER	NOMENCLATURE 1234567		EFF CODE	UNITS PER ASSY
-110B	D2549020614474		. . WASHBASIN UNIT used on 001B SEE 25-41-51-15F FOR DET	NP		001
-110C	D2549020612674		. . WASHBASIN UNIT used on 001E SEE 25-41-51-15F FOR DET	NP		001
-110D	D2549020613074		. . WASHBASIN UNIT used on 001G SEE 25-41-51-15F FOR DET	NP		001
-110E	D2549010510674		. . WASHBASIN UNIT used on 001H, 001J, 001K, 001L SEE 25-41-51-15F FOR DET	NP		001
-110F	D2549020704674		. . WASHBASIN UNIT used on 001M SEE 25-41-51-15G FOR DET	NP		001
120A	D2549020610275		. . DOOR ASSY-WASHBASIN UNIT used on 001A SEE 25-41-51-16B FOR DET	NP		001
-120B	D2549020607075		. . DOOR ASSY-WASHBASIN UNIT used on 001B, 001C, 001D, 001G, 001J, 001K, 001L SEE 25-41-51-16B FOR DET	NP		001
-120C	D2549030504075		. . DOOR ASSY-WASHBASIN UNIT used on 001F, 001H, 001N SEE 25-41-51-16B FOR DET	NP		001
-120D	D2549010511475		. . DOOR ASSY-WASHBASIN UNIT used on 001E SEE 25-41-51-16B FOR DET	NP		001

- ITEM NOT ILLUSTRATED

FIG. ITEM	PART NUMBER	AIRLINE STOCK NUMBER	NOMENCLATURE 1234567		EFF CODE	UNITS PER ASSY
-120E	D2549030506075		. . DOOR ASSY-WASHBASIN UNIT used on 001M SEE 25-41-51-16B FOR DET	NP		001
130A	D2549020610276		. . PANEL ASSY-WASHBASIN UNIT used on 001A SEE 25-41-51-17C FOR DET	NP		001
-130B	D2549030504876		. . PANEL ASSY-WASHBASIN UNIT used on 001B, 001C, 001D, 001F, 001H, 001J, 001K, 001L, 001N SEE 25-41-51-17C FOR DET	NP		001
-130C	D2549010511476		. . PANEL ASSY-WASHBASIN UNIT used on 001E SEE 25-41-51-17C FOR DET	NP		001
-130D	D2549020611676		. . PANEL ASSY-WASHBASIN UNIT used on 001G SEE 25-41-51-17C FOR DET	NP		001
-130E	D2549030506076		. . PANEL ASSY-WASHBASIN UNIT used on 001M SEE 25-41-51-17C FOR DET	NP		001
140A	D2549010509477		. . BIN-WASTE,CHUTE-WASTE AND EXTINGUISHER-FIRE used on 001A SEE 25-41-51-180 FOR DET	NP		001

- ITEM NOT ILLUSTRATED

FIG. ITEM	PART NUMBER	AIRLINE STOCK NUMBER	NOMENCLATURE 1234567		EFF CODE	UNITS PER ASSY
-140B	D2549030504877		. . BIN-WASTE,CHUTE-WASTE AND EXTINGUISHER-FIRE used on 001B, 001C, 001D, 001E, 001F, 001G, 001H, 001J, 001K, 001L, 001M, 001N SEE 25-41-51-180 FOR DET	NP		001
150A	D2549020610278		. . CABINET-SERVICE used on 001A SEE 25-41-51-19F FOR DET	NP		001
-150B	D2549030505878		. . CABINET-SERVICE used on 001B SEE 25-41-51-19E FOR DET	NP		001
-150C	D2549030504878		. . CABINET-SERVICE used on 001C, 001D, 001G, 001H, 001L SEE 25-41-51-19E FOR DET	NP		001
-150D	D2549010513478		. . CABINET-SERVICE used on 001E SEE 25-41-51-19F FOR DET	NP		001
-150E	D2549030505278		. . CABINET-SERVICE used on 001F, 001N SEE 25-41-51-19E FOR DET	NP		001
-150F	D2549010513878		. . CABINET-SERVICE used on 001J, 001K SEE 25-41-51-19F FOR DET	NP		001
-150G	D2549030506078		. . CABINET-SERVICE used on 001M SEE 25-41-51-19E FOR DET	NP		001
160A	D2549020612279		. . TABLE-NURSING used on 001A SEE 25-41-51-20A FOR DET	NP		001

- ITEM NOT ILLUSTRATED

FIG. ITEM	PART NUMBER	AIRLINE STOCK NUMBER	NOMENCLATURE 1234567		EFF CODE	UNITS PER ASSY
-160B	D2549010510679		. . TABLE-NURSING used on 001C, 001D, 001G SEE 25-41-51-20A FOR DET	NP		001
-160C	D2549010512679		. . TABLE-NURSING used on 001B, 001E, 001F, 001H, 001L, 001N SEE 25-41-51-20A FOR DET	NP		001
-160D	D2549010600279		. . TABLE-NURSING used on 001J, 001K SEE 25-41-51-20A FOR DET	NP		001
-160E	D2549030508479		. . TABLE-NURSING used on 001M SEE 25-41-51-20A FOR DET	NP		001
170A	D2549020612280		. . VENTILATION SYSTEM used on 001A SEE 25-41-51-21A FOR DET	NP		001
-170B	D2549010514280		. . VENTILATION SYSTEM used on 001B, 001C, 001D, 001E, 001F, 001G, 001H, 001L, 001N SEE 25-41-51-21A FOR DET	NP		001
-170C	D2549030507680		. . VENTILATION SYSTEM used on 001J, 001K SEE 25-41-51-21A FOR DET	NP		001
-170D	D2549030508480		. . VENTILATION SYSTEM used on 001M SEE 25-41-51-21A FOR DET	NP		001
180A	D2549030504881		. . WATER SYSTEM-POTABLE used on 001A, 001B, 001C, 001D, 001E, 001F, 001G, 001H, 001J, 001K, 001N SEE 25-41-51-22D FOR DET	NP		001

- ITEM NOT ILLUSTRATED

FIG. ITEM	PART NUMBER	AIRLINE STOCK NUMBER	NOMENCLATURE 1234567		EFF CODE	UNITS PER ASSY
-180B	D2549030504081		. . WATER SYSTEM-POTABLE used on 001L, 001M SEE 25-41-51-22G FOR DET	NP		001
190A	D2549030504882		. . WATER SYSTEM-WASTE used on 001A, 001B, 001C, 001D, 001F, 001N SEE 25-41-51-23B FOR DET	NP		001
-190B	D2549010511082		. . WATER SYSTEM-WASTE used on 001E, 001G, 001H, 001J, 001K SEE 25-41-51-23B FOR DET	NP		001
-190C	D2549030504082		. . WATER SYSTEM-WASTE used on 001L SEE 25-41-51-23B FOR DET	NP		001
-190D	D2549030506082		. . WATER SYSTEM-WASTE used on 001M SEE 25-41-51-23B FOR DET	NP		001
200A	D2549010509483		. . ELECTRICAL SYSTEM used on 001A SEE 25-41-51-26C FOR DET	NP		001
-200B	D2549030504883		. . ELECTRICAL SYSTEM used on 001B, 001C, 001D, 001E, 001F, 001G, 001H, 001J, 001K, 001M, 001N SEE 25-41-51-26C FOR DET	NP		001
-200C	D2549030508083		. . ELECTRICAL SYSTEM used on 001L SEE 25-41-51-26C FOR DET	NP		001

- ITEM NOT ILLUSTRATED

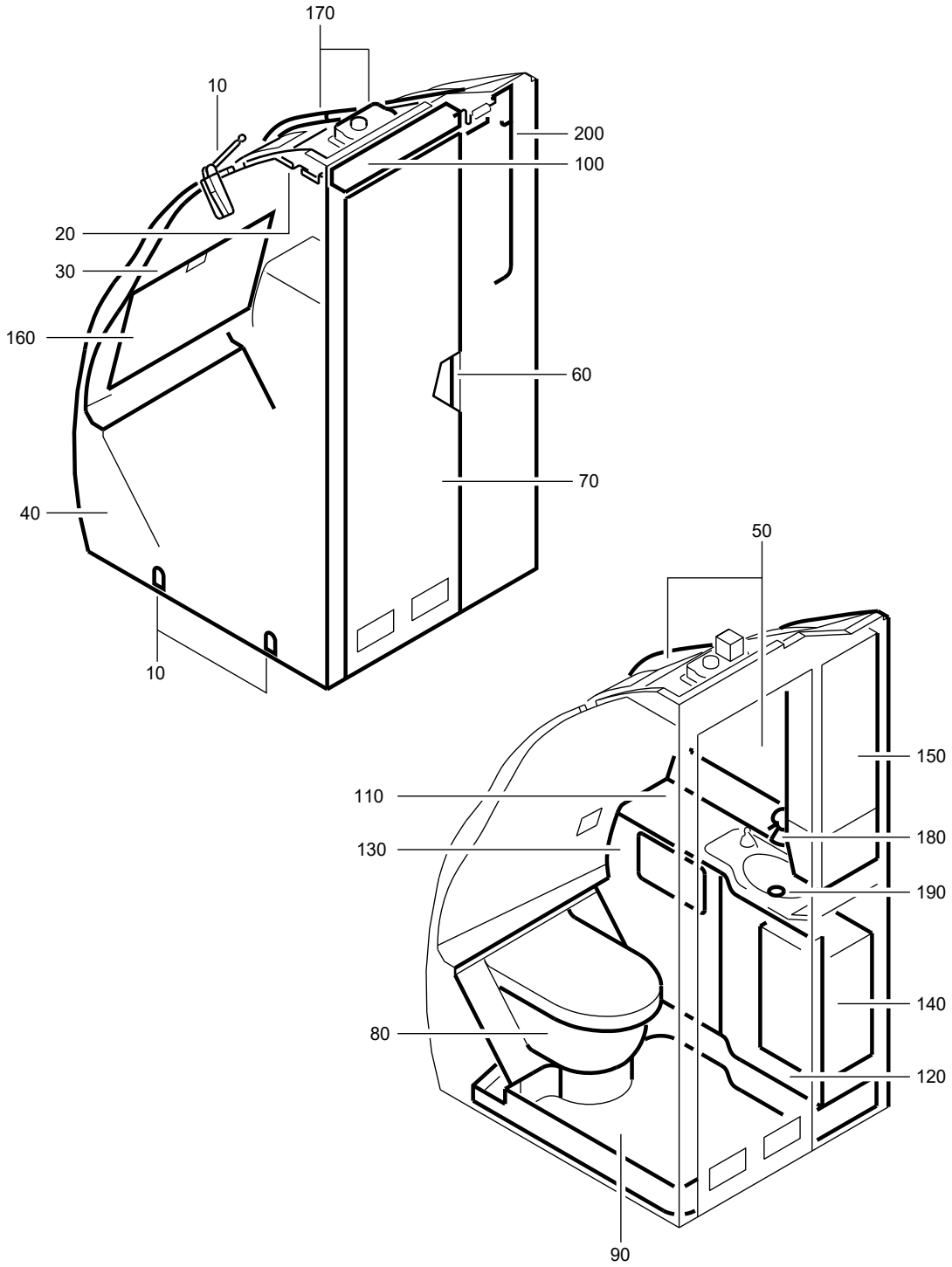

F_PL_254151_01_T_01_00

LAVATORY A ASSY
Figure 01T/EN254151SHEET01T01

FIG. ITEM	PART NUMBER	AIRLINE STOCK NUMBER	NOMENCLATURE 1234567	EFF CODE	UNITS PER ASSY
01T					
-001A	D2549010600400		. LAVATORY A ASSY SEE SIL 25-117 FOR DET		RF
-001B	D2549020612400		. LAVATORY A ASSY SEE SIL 25-117 FOR DET		RF
-001C	D2549020701400		. LAVATORY A ASSY SEE SIL 25-117 FOR DET		RF
-001D	D2549030507800		. LAVATORY A ASSY PRE VSB A2-254-25-046 SEE SIL 25-117 FOR DET		RF
-001E	D2549010601200		. LAVATORY A ASSY SEE SIL 25-117 FOR DET		RF
-001F	D2549030510600		. LAVATORY A ASSY SEE SIL 25-117 FOR DET		RF
-001G	D2549030510800		. LAVATORY A ASSY SEE SIL 25-117 FOR DET		RF
-001H	D2549010514200		. LAVATORY A ASSY SEE SIL 25-117 FOR DET		RF
-001J	D2549020507000		. LAVATORY A ASSY SEE SIL 25-117 FOR DET		RF
-001K	D2549020613200		. LAVATORY A ASSY SEE SIL 25-117 FOR DET		RF
-001L	D2549020703200		. LAVATORY A ASSY PRE VSB A2-254-25-131 SEE SIL 25-117 FOR DET		RF
-001M	D2549030509600		. LAVATORY A ASSY SEE SIL 25-117 FOR DET		RF
-001N	R225401134-016		. LAVATORY A ASSY POST VSB A2-254-25-046		RF

- ITEM NOT ILLUSTRATED

FIG. ITEM	PART NUMBER	AIRLINE STOCK NUMBER	NOMENCLATURE 1234567		EFF CODE	UNITS PER ASSY
-001P	R225401137-012		. LAVATORY A ASSY POST VSB A2-254-25-131			RF
010A	D2549020602661		. . ATTACHMENT-LAVATORY used on 001A, 001B, 001C, 001E, 001F, 001G, 001K, 001L, 001P SEE 25-41-51-020 FOR DET	NP		001
-010B	D2549020602861		. . ATTACHMENT-LAVATORY used on 001D, 001J, 001N SEE 25-41-51-020 FOR DET	NP		001
-010C	D2549010610061		. . ATTACHMENT-LAVATORY POST SB 25-1289 POST SB 25-1312 used on 001H SEE 25-41-51-02D FOR DET	NP		001
-010D	D2549020610061		. . ATTACHMENT-LAVATORY used on 001M SEE 25-41-51-02D FOR DET	NP		001
020A	D2549020602663		. . PANEL-CEILING used on 001A, 001B, 001C, 001E, 001F, 001G, 001H, 001K, 001L, 001M, 001P SEE 25-41-51-040 FOR DET	NP		001
-020B	D2549020602863		. . PANEL-CEILING used on 001D, 001J, 001N SEE 25-41-51-040 FOR DET	NP		001
030A	D2549010512664		. . WALL-REAR used on 001A, 001B, 001F, 001G, 001K, 001L, 001M, 001P SEE 25-41-51-05B FOR DET	NP		001
-030B	D2549010514464		. . WALL-REAR used on 001C SEE 25-41-51-05B FOR DET	NP		001

- ITEM NOT ILLUSTRATED

FIG. ITEM	PART NUMBER	AIRLINE STOCK NUMBER	NOMENCLATURE 1234567		EFF CODE	UNITS PER ASSY
-030C	D2549020613664		. . WALL-REAR used on 001D, 001J, 001N SEE 25-41-51-05B FOR DET	NP		001
-030D	D2549020614864		. . WALL-REAR used on 001E SEE 25-41-51-05D FOR DET	NP		001
-030E	D2549020611664		. . WALL-REAR POST SB 25-1289 used on 001H SEE 25-41-51-05A FOR DET	NP		001
040A	D2549010600065		. . WALL-SIDE used on 001A SEE 25-41-51-06L FOR DET	NP		001
-040B	D2549010600665		. . WALL-SIDE used on 001B SEE 25-41-51-06M FOR DET	NP		001
-040C	D2549020701465		. . WALL-SIDE used on 001C SEE 25-41-51-06M FOR DET	NP		001
-040D	D2549020613665		. . WALL-SIDE used on 001D, 001N SEE 25-41-51-06K FOR DET	NP		001
-040E	D2549010601265		. . WALL-SIDE used on 001E SEE 25-41-51-06M FOR DET	NP		001
-040F	D2549030510665		. . WALL-SIDE used on 001F SEE 25-41-51-06H FOR DET	NP		001
-040G	D2549030510865		. . WALL-SIDE used on 001G SEE 25-41-51-06M FOR DET	NP		001

- ITEM NOT ILLUSTRATED

FIG. ITEM	PART NUMBER	AIRLINE STOCK NUMBER	NOMENCLATURE 1234567		EFF CODE	UNITS PER ASSY
-040H	D2549010514265		. . WALL-SIDE POST SB 25-1289 used on 001H SEE 25-41-51-48E FOR DET	NP		001
-040J	D2549020507065		. . WALL-SIDE used on 001J SEE 25-41-51-06M FOR DET	NP		001
-040K	D2549020613265		. . WALL-SIDE used on 001K SEE 25-41-51-06M FOR DET	NP		001
-040L	D2549020703265		. . WALL-SIDE used on 001L, 001P SEE 25-41-51-06M FOR DET	NP		001
-040M	D2549020614465		. . WALL-SIDE used on 001M SEE 25-41-51-06L FOR DET	NP		001
050A	D2549010600466		. . HOUSING used on 001A SEE 25-41-51-07F FOR DET	NP		001
-050B	D2549010600666		. . HOUSING used on 001B SEE 25-41-51-07F FOR DET	NP		001
-050C	D2549020701466		. . HOUSING used on 001C SEE 25-41-51-07F FOR DET	NP		001
-050D	D2549020605666		. . HOUSING used on 001D, 001N SEE 25-41-51-07D FOR DET	NP		001
-050E	D2549010601266		. . HOUSING used on 001E SEE 25-41-51-07F FOR DET	NP		001

- ITEM NOT ILLUSTRATED

FIG. ITEM	PART NUMBER	AIRLINE STOCK NUMBER	NOMENCLATURE 1234567		EFF CODE	UNITS PER ASSY
-050F	D2549030510666		. . HOUSING used on 001F SEE 25-41-51-07F FOR DET	NP		001
-050G	D2549030510866		. . HOUSING used on 001G SEE 25-41-51-07F FOR DET	NP		001
-050H	D2549010514266		. . HOUSING used on 001H SEE 25-41-51-07Y FOR DET	NP		001
-050J	D2549020506266		. . HOUSING used on 001J SEE 25-41-51-07D FOR DET	NP		001
-050K	D2549020607066		. . HOUSING used on 001K SEE 25-41-51-07Y FOR DET	NP		001
-050L	D2549030505266		. . HOUSING used on 001L, 001P SEE 25-41-51-07B FOR DET	NP		001
-050M	D2549030505866		. . HOUSING used on 001M SEE 25-41-51-07D FOR DET	NP		001
060A	D2549010500069		. . DOOR INSTL used on 001A, 001B, 001C, 001D, 001E, 001F, 001G, 001J, 001K, 001L, 001M, 001N, 001P SEE 25-41-51-100 FOR DET	NP		001
-060B	D2549020401269		. . DOOR INSTL used on 001H SEE 25-41-51-10A FOR DET	NP		001
070A	A225400276-502		. . DOOR ASSY-SINGLE used on 001B SEE 25-41-51-11B FOR DET			001

- ITEM NOT ILLUSTRATED

FIG. ITEM	PART NUMBER	AIRLINE STOCK NUMBER	NOMENCLATURE 1234567	EFF CODE	UNITS PER ASSY
-070B	A225400276-926		. . DOOR ASSY-SINGLE used on 001C SEE 25-41-51-11E FOR DET		001
-070C	A225400276-570		. . DOOR ASSY-SINGLE used on 001D, 001N SEE 25-41-51-11E FOR DET		001
-070D	A225400276-924		. . DOOR ASSY-SINGLE used on 001E SEE 25-41-51-11E FOR DET		001
-070E	A225400276-566		. . DOOR ASSY-SINGLE used on 001F SEE 25-41-51-11E FOR DET		001
-070F	A225400276-576		. . DOOR ASSY-SINGLE used on 001G SEE 25-41-51-11E FOR DET		001
-070G	A2254002768578		. . DOOR ASSY-SINGLE used on 001H SEE 25-41-51-11N FOR DET		001
-070H	A225400276-590		. . DOOR ASSY-SINGLE used on 001J SEE 25-41-51-11E FOR DET		001
-070J	A225400276-906		. . DOOR ASSY-SINGLE used on 001K SEE 25-41-51-11C FOR DET		001
-070K	A225400276-530		. . DOOR ASSY-SINGLE used on 001L, 001P SEE 25-41-51-11B FOR DET		001
-070L	A225400276-588		. . DOOR ASSY-SINGLE used on 001M SEE 25-41-51-11F FOR DET		001

- ITEM NOT ILLUSTRATED

FIG. ITEM	PART NUMBER	AIRLINE STOCK NUMBER	NOMENCLATURE 1234567	EFF CODE	UNITS PER ASSY
-070M	A225400276-584		. . DOOR ASSY-SINGLE used on 001A, 001B SEE 25-41-51-11F FOR DET		001
080A	D2549020604271		. . TOILET UNIT AND TOILET SHROUD used on 001A, 001B, 001F, 001G, 001H, 001L, 001M, 001P SEE 25-41-51-12C FOR DET	NP	001
-080B	D2549020607671		. . TOILET UNIT AND TOILET SHROUD used on 001C, 001K SEE 25-41-51-12C FOR DET	NP	001
-080C	D2549020506271		. . TOILET UNIT AND TOILET SHROUD used on 001D, 001J, 001N SEE 25-41-51-12C FOR DET	NP	001
-080D	D2549010510471		. . TOILET UNIT AND TOILET SHROUD used on 001E SEE 25-41-51-12C FOR DET	NP	001
090A	D2549030504072		. . PAN-FLOOR used on 001A, 001F SEE 25-41-51-13B FOR DET	NP	001
-090B	D2549020604872		. . PAN-FLOOR used on 001B, 001K SEE 25-41-51-13C FOR DET	NP	001
-090C	D2549030505272		. . PAN-FLOOR PRE VSB A2-254-25-131 used on 001L SEE 25-41-51-13A FOR DET	NP	001
-090D	D2549020605672		. . PAN-FLOOR used on 001D, 001N SEE 25-41-51-13B FOR DET	NP	001

- ITEM NOT ILLUSTRATED

FIG. ITEM	PART NUMBER	AIRLINE STOCK NUMBER	NOMENCLATURE 1234567	EFF CODE	UNITS PER ASSY
-090E	D2549010601272		. . PAN-FLOOR NP used on 001E SEE 25-41-51-13D FOR DET		001
-090F	D2549020702272		. . PAN-FLOOR NP used on 001G SEE 25-41-51-13D FOR DET		001
-090G	D2549010514272		. . PAN-FLOOR NP POST SB 25-1289 used on 001H SEE 25-41-51-13T FOR DET		001
-090H	D2549020506272		. . PAN-FLOOR NP used on 001J SEE 25-41-51-13B FOR DET		001
-090J	D2549020610472		. . PAN-FLOOR NP used on 001M SEE 25-41-51-13C FOR DET		001
-090K	D2549020610672		. . PAN-FLOOR NP used on 001C SEE 25-41-51-13C FOR DET		001
-090L	R22540113701272		. . PAN-FLOOR NP POST VSB A2-254-25-131 used on 001P SEE 25-41-51-13A FOR DET		001
100A	D2549010512673		. . LIGHT-DOOR NP used on 001A, 001B, 001C, 001E, 001F, 001G, 001H, 001K, 001M SEE 25-41-51-140 FOR DET		001
-100B	D2549020613673		. . LIGHT-DOOR NP used on 001D, 001J, 001N SEE 25-41-51-140 FOR DET		001

- ITEM NOT ILLUSTRATED

FIG. ITEM	PART NUMBER	AIRLINE STOCK NUMBER	NOMENCLATURE 1234567		EFF CODE	UNITS PER ASSY
-100C	D2549020602673		. . LIGHT-DOOR used on 001L, 001P SEE 25-41-51-140 FOR DET	NP		001
110A	D2549010600074		. . WASHBASIN UNIT used on 001A, 001C SEE 25-41-51-15D FOR DET	NP		001
-110B	D2549010510674		. . WASHBASIN UNIT used on 001B, 001F, 001K SEE 25-41-51-15F FOR DET	NP		001
-110C	D2549020613674		. . WASHBASIN UNIT used on 001D, 001N SEE 25-41-51-15F FOR DET	NP		001
-110D	D2549010601274		. . WASHBASIN UNIT used on 001E SEE 25-41-51-15F FOR DET	NP		001
-110E	D2549030510874		. . WASHBASIN UNIT used on 001G SEE 25-41-51-15G FOR DET	NP		001
-110F	D2549030509474		. . WASHBASIN UNIT used on 001J SEE 25-41-51-15F FOR DET	NP		001
-110G	D2549030504874		. . WASHBASIN UNIT used on 001L, 001P SEE 25-41-51-15C FOR DET	NP		001
-110H	D2549020614474		. . WASHBASIN UNIT used on 001M SEE 25-41-51-15F FOR DET	NP		001
-110J	D2549010514074		. . WASHBASIN UNIT used on 001H SEE 25-41-51-15F FOR DET	NP		001

- ITEM NOT ILLUSTRATED

FIG. ITEM	PART NUMBER	AIRLINE STOCK NUMBER	NOMENCLATURE 1234567	EFF CODE	UNITS PER ASSY
120A	D2549030504075		. . DOOR ASSY-WASHBASIN UNIT NP used on 001A, 001H, 001J SEE 25-41-51-16B FOR DET		001
-120B	D2549020607075		. . DOOR ASSY-WASHBASIN UNIT NP used on 001B, 001F, 001G, 001L, 001M, 001P SEE 25-41-51-16B FOR DET		001
-120C	D2549020607675		. . DOOR ASSY-WASHBASIN UNIT NP used on 001C, 001K SEE 25-41-51-16C FOR DET		001
-120D	D2549030505475		. . DOOR ASSY-WASHBASIN UNIT NP used on 001D, 001N SEE 25-41-51-16B FOR DET		001
-120E	D2549010510475		. . DOOR ASSY-WASHBASIN UNIT NP used on 001E SEE 25-41-51-16B FOR DET		001
130A	D2549030504876		. . PANEL ASSY-WASHBASIN UNIT NP used on 001A, 001F, 001G, 001H, 001L, 001M, 001P SEE 25-41-51-17C FOR DET		001
-130B	D2549010510876		. . PANEL ASSY-WASHBASIN UNIT NP used on 001B SEE 25-41-51-17C FOR DET		001
-130C	D2549020607676		. . PANEL ASSY-WASHBASIN UNIT NP used on 001C, 001K SEE 25-41-51-17C FOR DET		001

- ITEM NOT ILLUSTRATED

FIG. ITEM	PART NUMBER	AIRLINE STOCK NUMBER	NOMENCLATURE 1234567		EFF CODE	UNITS PER ASSY
-130D	D2549020506276		. . PANEL ASSY-WASHBASIN UNIT used on 001D, 001J, 001N SEE 25-41-51-17C FOR DET	NP		001
-130E	D2549010604876		. . PANEL ASSY-WASHBASIN UNIT used on 001E SEE 25-41-51-17D FOR DET	NP		001
140A	D2549030504877		. . BIN-WASTE,CHUTE-WASTE AND EXTINGUISHER-FIRE used on 001A, 001B, 001C, 001D, 001E, 001F, 001G, 001H, 001K, 001L, 001M, 001N, 001P SEE 25-41-51-180 FOR DET	NP		001
-140B	D2549020506277		. . BIN-WASTE,CHUTE-WASTE AND EXTINGUISHER-FIRE used on 001J SEE 25-41-51-180 FOR DET	NP		001
150A	D2549030504078		. . CABINET-SERVICE used on 001A, 001E SEE 25-41-51-19E FOR DET	NP		001
-150B	D2549030504878		. . CABINET-SERVICE used on 001B, 001C, 001F, 001G, 001H, 001K SEE 25-41-51-19E FOR DET	NP		001
-150C	D2549020605678		. . CABINET-SERVICE used on 001D, 001N SEE 25-41-51-19E FOR DET	NP		001
-150D	D2549020506278		. . CABINET-SERVICE used on 001J SEE 25-41-51-19E FOR DET	NP		001

- ITEM NOT ILLUSTRATED

FIG. ITEM	PART NUMBER	AIRLINE STOCK NUMBER	NOMENCLATURE 1234567		EFF CODE	UNITS PER ASSY
-150E	D2549030505278		. . CABINET-SERVICE used on 001L, 001P SEE 25-41-51-19E FOR DET	NP		001
-150F	D2549030505878		. . CABINET-SERVICE used on 001M SEE 25-41-51-19E FOR DET	NP		001
160A	D2549010512679		. . TABLE-NURSING used on 001A, 001B, 001F, 001L, 001M, 001P SEE 25-41-51-20A FOR DET	NP		001
-160B	D2549010510679		. . TABLE-NURSING used on 001C, 001E, 001G, 001H, 001K SEE 25-41-51-20A FOR DET	NP		001
-160C	D2549020613679		. . TABLE-NURSING used on 001D, 001J, 001N SEE 25-41-51-20A FOR DET	NP		001
170A	D2549030504880		. . VENTILATION SYSTEM used on 001A, 001L, 001P SEE 25-41-51-210 FOR DET	NP		001
-170B	D2549020507080		. . VENTILATION SYSTEM used on 001D, 001J, 001N SEE 25-41-51-21A FOR DET	NP		001
-170C	D2549010514280		. . VENTILATION SYSTEM used on 001B, 001C, 001E, 001F, 001G, 001H, 001K, 001M SEE 25-41-51-21A FOR DET	NP		001
180A	D2549030504881		. . WATER SYSTEM-POTABLE used on 001A, 001B, 001C, 001G, 001H, 001L, 001M, 001P SEE 25-41-51-22D FOR DET	NP		001

- ITEM NOT ILLUSTRATED

FIG. ITEM	PART NUMBER	AIRLINE STOCK NUMBER	NOMENCLATURE 1234567	EFF CODE	UNITS PER ASSY
-180B	D2549030507881		. . WATER SYSTEM-POTABLE NP used on 001D, 001N SEE 25-41-51-22D FOR DET		001
-180C	D2549010510481		. . WATER SYSTEM-POTABLE NP used on 001E SEE 25-41-51-22F FOR DET		001
-180D	D2549030504081		. . WATER SYSTEM-POTABLE NP used on 001F SEE 25-41-51-22G FOR DET		001
-180E	D2549020506281		. . WATER SYSTEM-POTABLE NP used on 001J SEE 25-41-51-22E FOR DET		001
-180F	D2549030507881		. . WATER SYSTEM-POTABLE NP used on 001K SEE 25-41-51-22D FOR DET		001
190A	D2549030504882		. . WATER SYSTEM-WASTE NP used on 001L, 001M, 001P SEE 25-41-51-23B FOR DET		001
-190B	D2549010511082		. . WATER SYSTEM-WASTE NP used on 001A, 001B, 001C, 001E, 001G, 001H SEE 25-41-51-23B FOR DET		001
-190C	D2549020605682		. . WATER SYSTEM-WASTE NP used on 001D, 001N SEE 25-41-51-23B FOR DET		001
-190D	D2549030504082		. . WATER SYSTEM-WASTE NP used on 001F, 001K SEE 25-41-51-23B FOR DET		001
190E	D2549020506282		. . WATER SYSTEM-WASTE NP used on 001J SEE 25-41-51-23B FOR DET		001

- ITEM NOT ILLUSTRATED

FIG. ITEM	PART NUMBER	AIRLINE STOCK NUMBER	NOMENCLATURE 1234567		EFF CODE	UNITS PER ASSY
200A	D2549030504883		. . ELECTRICAL SYSTEM used on 001A, 001B, 001C, 001F, 001G, 001H, 001K, 001L, 001M, 001P SEE 25-41-51-26C FOR DET	NP		001
-200B	D2549010601283		. . ELECTRICAL SYSTEM used on 001E SEE 25-41-51-26C FOR DET	NP		001
-200C	D2549020506283		. . ELECTRICAL SYSTEM used on 001J SEE 25-41-51-26C FOR DET	NP		001
-200D	D2549020605683		. . ELECTRICAL SYSTEM used on 001D, 001N SEE 25-41-51-26C FOR DET	NP		001

- ITEM NOT ILLUSTRATED

THIS PAGE IS INTENTIONALLY LEFT BLANK

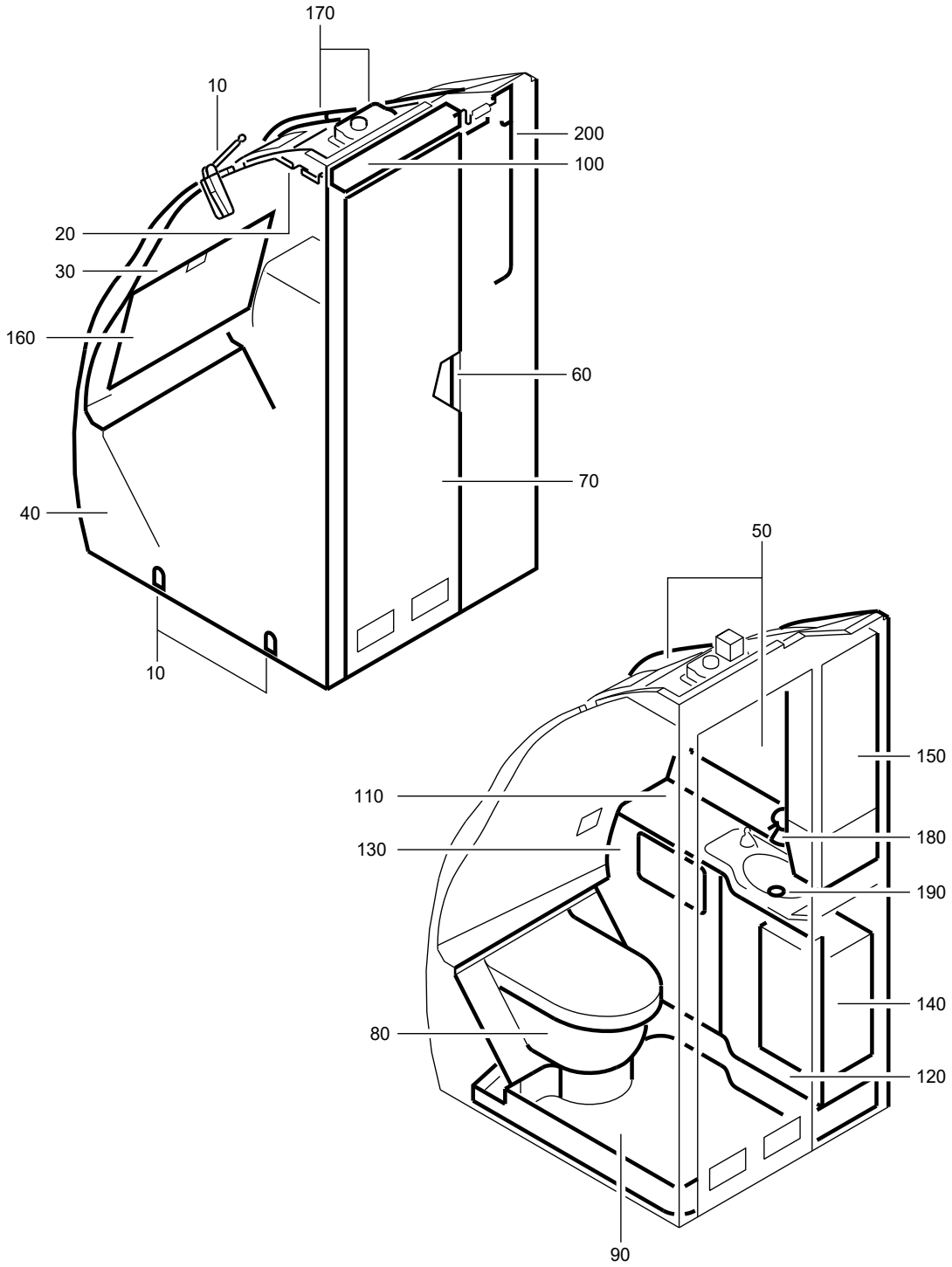

F_PL_254151_01_U_01_00

LAVATORY A ASSY
Figure 01U/EN254151SHEET01U01

FIG. ITEM	PART NUMBER	AIRLINE STOCK NUMBER	NOMENCLATURE 1234567	EFF CODE	UNITS PER ASSY
01U					
-001A	D2549020614000		. LAVATORY A ASSY SEE SIL 25-117 FOR DET		RF
-001B	D2549020613800		. LAVATORY A ASSY SEE SIL 25-117 FOR DET		RF
-001C	D2549020612800		. LAVATORY A ASSY SEE SIL 25-117 FOR DET		RF
-001D	D2549030511400		. LAVATORY A ASSY SEE SIL 25-117 FOR DET		RF
-001E	D2549020702000		. LAVATORY A ASSY SEE SIL 25-117 FOR DET		RF
-001F	D2549030511000		. LAVATORY A ASSY SEE SIL 25-117 FOR DET		RF
-001G	D2549030512000		. LAVATORY A ASSY SEE SIL 25-117 FOR DET		RF
-001H	D2549030511200		. LAVATORY A ASSY SEE SIL 25-117 FOR DET		RF
-001J	D2549010602000		. LAVATORY A ASSY SEE SIL 25-117 FOR DET		RF
-001K	D2549030511600		. LAVATORY A ASSY SEE SIL 25-117 FOR DET		RF
-001L	D2549030512200		. LAVATORY A ASSY SEE SIL 25-117 FOR DET		RF
-001M	D2549030510200		. LAVATORY A ASSY PRE VSB A2-254-25-054 SEE SIL 25-117 FOR DET		RF
-001N	D2549020702000		. LAVATORY A ASSY POST SB 25-1316 SEE SIL 25-117 FOR DET		RF

- ITEM NOT ILLUSTRATED

FIG. ITEM	PART NUMBER	AIRLINE STOCK NUMBER	NOMENCLATURE 1234567	EFF CODE	UNITS PER ASSY
-001P	D2549030511000		. LAVATORY A ASSY SEE SIL 25-117 FOR DET		RF
-001Q	D2549030512000		. LAVATORY A ASSY SEE SIL 25-117 FOR DET		RF
-001R	R225401168-006		. LAVATORY A ASSY POST VSB A2-254-25-054 SEE SIL 25-117 FOR DET		RF
010A	D2549020602661		. . ATTACHMENT-LAVATORY NP used on 001A, 001B, 001C, 001F, 001H, 001J, 001P SEE 25-41-51-020 FOR DET		001
-010B	D2549010513861		. . ATTACHMENT-LAVATORY NP used on 001E, 001N SEE 25-41-51-020 FOR DET		001
-010C	D2549020700461		. . ATTACHMENT-LAVATORY NP used on 001D, 001G, 001Q SEE 25-41-51-02A FOR DET		001
-010D	D2549030510261		. . ATTACHMENT-LAVATORY NP used on 001M, 001R SEE 25-41-51-02A FOR DET		001
-010E	D2549020705861		. . ATTACHMENT-LAVATORY NP used on 001L SEE 25-41-51-02D FOR DET		001
-010F	D2549020610061		. . ATTACHMENT-LAVATORY NP used on 001K SEE 25-41-51-02D FOR DET		001
020A	D2549020602663		. . PANEL-CEILING NP used on 001A, 001B, 001C, 001D, 001F, 001G, 001H, 001J, 001K, 001L, 001P, 001Q SEE 25-41-51-040 FOR DET		001

- ITEM NOT ILLUSTRATED

FIG. ITEM	PART NUMBER	AIRLINE STOCK NUMBER	NOMENCLATURE 1234567		EFF CODE	UNITS PER ASSY
-020B	D2549010513863		. . PANEL-CEILING used on 001E, 001N SEE 25-41-51-040 FOR DET	NP		001
-020C	D2549030507263		. . PANEL-CEILING used on 001M, 001R SEE 25-41-51-040 FOR DET	NP		001
030A	D2549010514464		. . WALL-REAR used on 001A, 001C SEE 25-41-51-05B FOR DET	NP		001
-030B	D2549010512664		. . WALL-REAR used on 001B, 001D, 001F, 001G, 001H, 001J, 001K, 001L, 001P, 001Q SEE 25-41-51-05B FOR DET	NP		001
-030C	D2549010600264		. . WALL-REAR used on 001E, 001N SEE 25-41-51-05D FOR DET	NP		001
-030D	D2549030508664		. . WALL-REAR used on 001M, 001R SEE 25-41-51-05B FOR DET	NP		001
040A	D2549020614065		. . WALL-SIDE used on 001A SEE 25-41-51-06N FOR DET	NP		001
-040B	D2549020613865		. . WALL-SIDE used on 001B SEE 25-41-51-06N FOR DET	NP		001
-040C	D2549020612865		. . WALL-SIDE used on 001C SEE 25-41-51-06N FOR DET	NP		001
-040D	D2549030511465		. . WALL-SIDE used on 001D SEE 25-41-51-06M FOR DET	NP		001

- ITEM NOT ILLUSTRATED

FIG. ITEM	PART NUMBER	AIRLINE STOCK NUMBER	NOMENCLATURE 1234567		EFF CODE	UNITS PER ASSY
-040E	D2549030511865		. . WALL-SIDE used on 001E SEE 25-41-51-06M FOR DET	NP		001
-040F	D2549030511065		. . WALL-SIDE used on 001F, 001G, 001P, 001Q SEE 25-41-51-06N FOR DET	NP		001
-040G	D2549030511265		. . WALL-SIDE used on 001H SEE 25-41-51-06N FOR DET	NP		001
-040H	D2549010602065		. . WALL-SIDE used on 001J SEE 25-41-51-06N FOR DET	NP		001
-040J	D2549030511665		. . WALL-SIDE used on 001K, 001L SEE 25-41-51-06N FOR DET	NP		001
-040K	D2549030510265		. . WALL-SIDE PRE VSB A2-254-25-054 used on 001M SEE 25-41-51-06N FOR DET	NP		001
-040L	D2549020702065		. . WALL-SIDE used on 001N SEE 25-41-51-06H FOR DET	NP		001
-040M	R22540116800465		. . WALL-SIDE POST VSB A2-254-25-054 used on 001R SEE 25-41-51-06N FOR DET	NP		001
050A	D2549020605066		. . HOUSING used on 001A SEE 25-41-51-07E FOR DET	NP		001
-050B	D2549030506266		. . HOUSING used on 001B SEE 25-41-51-07E FOR DET	NP		001

- ITEM NOT ILLUSTRATED

FIG. ITEM	PART NUMBER	AIRLINE STOCK NUMBER	NOMENCLATURE 1234567	EFF CODE	UNITS PER ASSY
-050C	D2549020604266		. . HOUSING NP used on 001C SEE 25-41-51-07D FOR DET		001
-050D	D2549030510666		. . HOUSING NP used on 001D SEE 25-41-51-07F FOR DET		001
-050E	D2549010513866		. . HOUSING NP used on 001E, 001N SEE 25-41-51-07E FOR DET		001
-050F	D2549030511066		. . HOUSING NP used on 001F, 001G, 001P, 001Q SEE 25-41-51-07F FOR DET		001
-050G	D2549030511266		. . HOUSING NP used on 001H SEE 25-41-51-07G FOR DET		001
-050H	D2549010602066		. . HOUSING NP used on 001J SEE 25-41-51-07F FOR DET		001
-050J	D2549030511666		. . HOUSING NP used on 001K, 001L SEE 25-41-51-07G FOR DET		001
-050K	D2549030507266		. . HOUSING NP used on 001M, 001R SEE 25-41-51-07E FOR DET		001
060A	D2549010500069		. . DOOR INSTL NP used on 001A, 001B, 001C, 001D, 001E, 001F, 001G, 001H, 001J, 001K, 001L, 001M, 001N, 001P, 001Q, 001R SEE 25-41-51-100 FOR DET		001

- ITEM NOT ILLUSTRATED

FIG. ITEM	PART NUMBER	AIRLINE STOCK NUMBER	NOMENCLATURE 1234567	EFF CODE	UNITS PER ASSY
070A	A225400276-528		. . DOOR ASSY-SINGLE used on 001A SEE 25-41-51-11C FOR DET		001
-070B	A225400276-572		. . DOOR ASSY-SINGLE used on 001B SEE 25-41-51-11E FOR DET		001
-070C	A225400276-502		. . DOOR ASSY-SINGLE used on 001C SEE 25-41-51-11B FOR DET		001
-070D	A225400276-566		. . DOOR ASSY-SINGLE used on 001D SEE 25-41-51-11E FOR DET		001
-070E	A225400276-574		. . DOOR ASSY-SINGLE used on 001E, 001N SEE 25-41-51-11E FOR DET		001
-070F	A225400276-580		. . DOOR ASSY-SINGLE used on 001F, 001G, 001P, 001Q SEE 25-41-51-11F FOR DET		001
-070G	A225400276-578		. . DOOR ASSY-SINGLE used on 001H SEE 25-41-51-11F FOR DET		001
-070H	A225400276-582		. . DOOR ASSY-SINGLE used on 001J SEE 25-41-51-11F FOR DET		001
-070J	A225400276-928		. . DOOR ASSY-SINGLE used on 001K, 001L SEE 25-41-51-11F FOR DET		001
-070K	A225400276-932		. . DOOR ASSY-SINGLE used on 001M, 001R SEE 25-41-51-11D FOR DET		001

- ITEM NOT ILLUSTRATED

FIG. ITEM	PART NUMBER	AIRLINE STOCK NUMBER	NOMENCLATURE 1234567		EFF CODE	UNITS PER ASSY
080A	D2549020604271		. . TOILET UNIT AND TOILET SHROUD used on 001A, 001C, 001D, 001E, 001F, 001G, 001H, 001N, 001P, 001Q SEE 25-41-51-12C FOR DET	NP		001
-080B	D2549030506271		. . TOILET UNIT AND TOILET SHROUD used on 001B SEE 25-41-51-12C FOR DET	NP		001
-080C	D2549010602071		. . TOILET UNIT AND TOILET SHROUD used on 001J SEE 25-41-51-12D FOR DET	NP		001
-080D	D2549030511671		. . TOILET UNIT AND TOILET SHROUD used on 001K, 001L SEE 25-41-51-12D FOR DET	NP		001
-080E	D2549030507271		. . TOILET UNIT AND TOILET SHROUD used on 001M, 001R SEE 25-41-51-12D FOR DET	NP		001
090A	D2549030506272		. . PAN-FLOOR used on 001A SEE 25-41-51-13B FOR DET	NP		001
-090B	D2549020607472		. . PAN-FLOOR used on 001B SEE 25-41-51-13C FOR DET	NP		001
-090C	D2549030504072		. . PAN-FLOOR used on 001C, 001D SEE 25-41-51-13B FOR DET	NP		001

- ITEM NOT ILLUSTRATED

FIG. ITEM	PART NUMBER	AIRLINE STOCK NUMBER	NOMENCLATURE 1234567		EFF CODE	UNITS PER ASSY
-090D	D2549010513872		. . PAN-FLOOR used on 001E, 001N SEE 25-41-51-13C FOR DET	NP		001
-090E	D2549030511072		. . PAN-FLOOR used on 001F, 001G, 001P, 001Q SEE 25-41-51-13C FOR DET	NP		001
-090F	D2549030511272		. . PAN-FLOOR used on 001H SEE 25-41-51-13D FOR DET	NP		001
-090G	D2549030504672		. . PAN-FLOOR used on 001J SEE 25-41-51-13B FOR DET	NP		001
-090H	D2549030511672		. . PAN-FLOOR used on 001K, 001L SEE 25-41-51-13T FOR DET	NP		001
-090J	D2549020512472		. . PAN-FLOOR used on 001M, 001R SEE 25-41-51-13H FOR DET	NP		001
100A	D2549010512673		. . LIGHT-DOOR used on 001A, 001B, 001C, 001D, 001F, 001G, 001H, 001J, 001K, 001L, 001P, 001Q SEE 25-41-51-140 FOR DET	NP		001
-100B	D2549010600273		. . LIGHT-DOOR used on 001E, 001N SEE 25-41-51-14A FOR DET	NP		001
-100C	D2549030508673		. . LIGHT-DOOR used on 001M, 001R SEE 25-41-51-14A FOR DET	NP		001
110A	D2549010600074		. . WASHBASIN UNIT used on 001A SEE 25-41-51-15D FOR DET	NP		001

- ITEM NOT ILLUSTRATED

FIG. ITEM	PART NUMBER	AIRLINE STOCK NUMBER	NOMENCLATURE 1234567		EFF CODE	UNITS PER ASSY
-110B	D2549010510674		. . WASHBASIN UNIT used on 001B, 001C, 001D, 001E, 001N SEE 25-41-51-15F FOR DET	NP		001
-110C	D2549010601274		. . WASHBASIN UNIT used on 001F, 001G, 001P, 001Q SEE 25-41-51-15F FOR DET	NP		001
-110D	D2549030511274		. . WASHBASIN UNIT used on 001H SEE 25-41-51-15G FOR DET	NP		001
-110E	D2549010602074		. . WASHBASIN UNIT used on 001J SEE 25-41-51-15G FOR DET	NP		001
-110F	D2549020612674		. . WASHBASIN UNIT used on 001K, 001L SEE 25-41-51-15F FOR DET	NP		001
-110G	D2549030508674		. . WASHBASIN UNIT used on 001M, 001R SEE 25-41-51-15F FOR DET	NP		001
120A	D2549020607075		. . DOOR ASSY-WASHBASIN UNIT used on 001A, 001C, 001D, 001E, 001F, 001G, 001H, 001K, 001L, 001N, 001P, 001Q SEE 25-41-51-16B FOR DET	NP		001
-120B	D2549030506275		. . DOOR ASSY-WASHBASIN UNIT used on 001B SEE 25-41-51-16C FOR DET	NP		001
-120C	D2549030504675		. . DOOR ASSY-WASHBASIN UNIT used on 001J SEE 25-41-51-16B FOR DET	NP		001

- ITEM NOT ILLUSTRATED

FIG. ITEM	PART NUMBER	AIRLINE STOCK NUMBER	NOMENCLATURE 1234567		EFF CODE	UNITS PER ASSY
-120D	D2549030507275		. . DOOR ASSY-WASHBASIN UNIT used on 001M, 001R SEE 25-41-51-16C FOR DET	NP		001
130A	D2549030504876		. . PANEL ASSY-WASHBASIN UNIT used on 001A, 001C, 001D, 001E, 001H, 001K, 001L, 001N SEE 25-41-51-17C FOR DET	NP		001
-130B	D2549030506276		. . PANEL ASSY-WASHBASIN UNIT used on 001B SEE 25-41-51-17C FOR DET	NP		001
-130C	D2549030511076		. . PANEL ASSY-WASHBASIN UNIT used on 001F, 001G, 001P, 001Q SEE 25-41-51-17D FOR DET	NP		001
-130D	D2549030504676		. . PANEL ASSY-WASHBASIN UNIT used on 001J SEE 25-41-51-17C FOR DET	NP		001
-130E	D2549030507276		. . PANEL ASSY-WASHBASIN UNIT used on 001M, 001R SEE 25-41-51-17D FOR DET	NP		001
-140A	D2549030504877		. . BIN-WASTE,CHUTE-WASTE AND EXTINGUISHER-FIRE used on 001A, 001B, 001C, 001D, 001E, 001F, 001G, 001H, 001J, 001K, 001L, 001M, 001N, 001P, 001Q, 001R SEE 25-41-51-180 FOR DET	NP		001

- ITEM NOT ILLUSTRATED

FIG. ITEM	PART NUMBER	AIRLINE STOCK NUMBER	NOMENCLATURE 1234567		EFF CODE	UNITS PER ASSY
150A	D2549030505878		. . CABINET-SERVICE used on 001A SEE 25-41-51-19E FOR DET	NP		001
-150B	D2549030504878		. . CABINET-SERVICE used on 001B, 001C, 001D, 001F, 001G, 001H, 001K, 001L, 001P, 001Q SEE 25-41-51-19E FOR DET	NP		001
-150C	D2549010513878		. . CABINET-SERVICE used on 001E, 001N SEE 25-41-51-19F FOR DET	NP		001
-150D	D2549030504678		. . CABINET-SERVICE used on 001J SEE 25-41-51-19E FOR DET	NP		001
-150E	D2549030507278		. . CABINET-SERVICE PRE VSB A2-254-25-054 used on 001M SEE 25-41-51-19F FOR DET	NP		001
-150F	R22540116800478		. . CABINET-SERVICE POST VSB A2-254-25-054 used on 001R SEE 25-41-51-19F FOR DET	NP		001
160A	D2549010510679		. . TABLE-NURSING used on 001A, 001C, 001F, 001G, 001K, 001L, 001P, 001Q SEE 25-41-51-20A FOR DET	NP		001
-160B	D2549010512679		. . TABLE-NURSING used on 001B, 001D, 001H SEE 25-41-51-20A FOR DET	NP		001
-160C	D2549010600279		. . TABLE-NURSING used on 001E, 001N SEE 25-41-51-20A FOR DET	NP		001

- ITEM NOT ILLUSTRATED

FIG. ITEM	PART NUMBER	AIRLINE STOCK NUMBER	NOMENCLATURE 1234567		EFF CODE	UNITS PER ASSY
-160D	D2549010602079		. . TABLE-NURSING used on 001J SEE 25-41-51-20A FOR DET	NP		001
-160E	D2549030508679		. . TABLE-NURSING used on 001M, 001R SEE 25-41-51-20A FOR DET	NP		001
170A	D2549010514280		. . VENTILATION SYSTEM used on 001A, 001B, 001C, 001D, 001F, 001G, 001H, 001J, 001K, 001L, 001P, 001Q SEE 25-41-51-21A FOR DET	NP		001
-170B	D2549030507680		. . VENTILATION SYSTEM used on 001E, 001N SEE 25-41-51-21A FOR DET	NP		001
-170C	D2549030508680		. . VENTILATION SYSTEM used on 001M, 001R SEE 25-41-51-21A FOR DET	NP		001
180A	D2549030504881		. . WATER SYSTEM-POTABLE used on 001A, 001B, 001C, 001E, 001H, 001J, 001K, 001L, 001M, 001N, 001R SEE 25-41-51-22D FOR DET	NP		001
-180B	D2549030504081		. . WATER SYSTEM-POTABLE used on 001D SEE 25-41-51-22G FOR DET	NP		001
-180C	D2549010513681		. . WATER SYSTEM-POTABLE used on 001F, 001G, 001P, 001Q SEE 25-41-51-22H FOR DET	NP		001
190A	D2549010511082		. . WATER SYSTEM-WASTE used on 001A, 001B, 001C, 001E, 001J, 001K, 001L, 001M, 001N, 001R SEE 25-41-51-23B FOR DET	NP		001

- ITEM NOT ILLUSTRATED

FIG. ITEM	PART NUMBER	AIRLINE STOCK NUMBER	NOMENCLATURE 1234567	EFF CODE	UNITS PER ASSY
-190B	D2549030504082		. . WATER SYSTEM-WASTE NP used on 001D, 001F, 001G, 001P, 001Q SEE 25-41-51-23B FOR DET		001
-190C	D2549030506082		. . WATER SYSTEM-WASTE NP used on 001H SEE 25-41-51-23B FOR DET		001
200A	D2549030504883		. . ELECTRICAL SYSTEM NP used on 001A, 001B, 001C, 001E, 001H, 001N SEE 25-41-51-26C FOR DET		001
-200B	D2549010510483		. . ELECTRICAL SYSTEM NP used on 001F SEE 25-41-51-26C FOR DET		001
-200C	D2549030512083		. . ELECTRICAL SYSTEM NP used on 001G SEE 25-41-51-26C FOR DET		001
-200D	D2549020506283		. . ELECTRICAL SYSTEM NP used on 001J SEE 25-41-51-26C FOR DET		001
-200E	D2549030511683		. . ELECTRICAL SYSTEM NP used on 001K SEE 25-41-51-26C FOR DET		001
-200F	D2549030512283		. . ELECTRICAL SYSTEM NP used on 001L SEE 25-41-51-26C FOR DET		001
-200G	D2549030508083		. . ELECTRICAL SYSTEM NP used on 001M, 001R SEE 25-41-51-26C FOR DET		001
-200H	D2549030511183		. . ELECTRICAL SYSTEM NP used on 001P SEE 25-41-51-26C FOR DET		001

- ITEM NOT ILLUSTRATED

FIG. ITEM	PART NUMBER	AIRLINE STOCK NUMBER	NOMENCLATURE 1234567	EFF CODE	UNITS PER ASSY
-200J	D2549030512183		. . ELECTRICAL SYSTEM NP used on 001Q SEE 25-41-51-26C FOR DET		001

- ITEM NOT ILLUSTRATED

THIS PAGE IS INTENTIONALLY LEFT BLANK

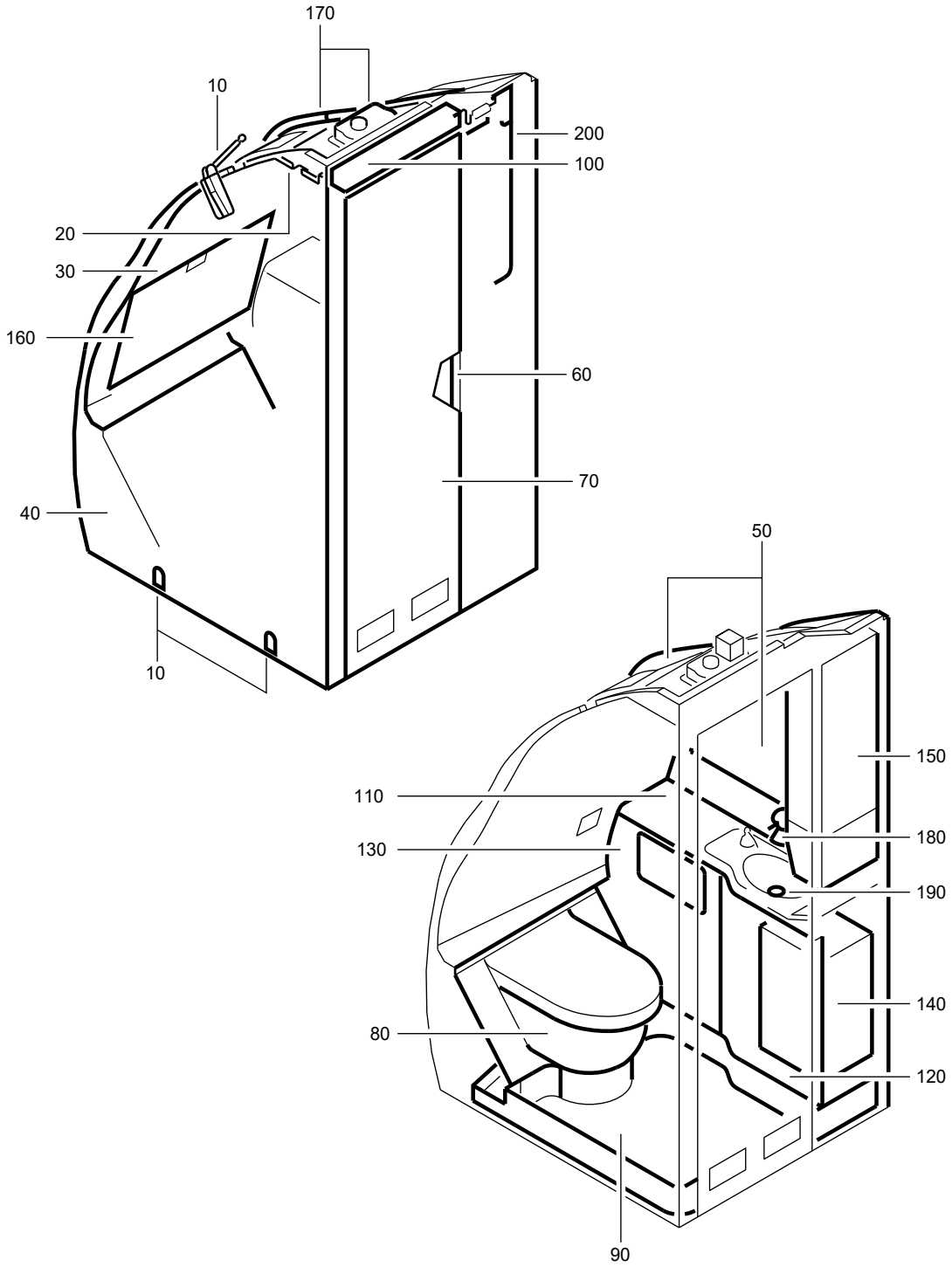

F_PL_254151_01_V_01_00

LAVATORY A ASSY
Figure 01V/EN254151SHEET01V01

FIG. ITEM	PART NUMBER	AIRLINE STOCK NUMBER	NOMENCLATURE 1234567	EFF CODE	UNITS PER ASSY
01V					
-001A	D2549030513600		. LAVATORY A ASSY PRE VSB A2-254-25-131 SEE SIL 25-117 FOR DET		RF
-001B	D2549030513200		. LAVATORY A ASSY SEE SIL 25-117 FOR DET		RF
-001C	D2549030510000		. LAVATORY A ASSY SEE SIL 25-117 FOR DET		RF
-001D	D2549030512800		. LAVATORY A ASSY SEE SIL 25-117 FOR DET		RF
-001E	D2549030513400		. LAVATORY A ASSY SEE SIL 25-117 FOR DET		RF
-001F	D2549020704600		. LAVATORY A ASSY SEE SIL 25-117 FOR DET		RF
-001G	D2549030514000		. LAVATORY A ASSY SEE SIL 25-117 FOR DET		RF
-001H	D2549030513000		. LAVATORY A ASSY PRE VSB A2-254-25-046 SEE SIL 25-117 FOR DET		RF
-001J	D2549010514600		. LAVATORY A ASSY PRE VSB A2-254-25-080 SEE SIL 25-117 FOR DET		RF
-001K	D2549010514800		. LAVATORY A ASSY PRE VSB A2-254-25-047 SEE SIL 25-117 FOR DET		RF
-001L	D2549020704000		. LAVATORY A ASSY SEE SIL 25-117 FOR DET		RF
-001M	D2549020507200		. LAVATORY A ASSY SEE SIL 25-117 FOR DET		RF

- ITEM NOT ILLUSTRATED

FIG. ITEM	PART NUMBER	AIRLINE STOCK NUMBER	NOMENCLATURE 1234567	EFF CODE	UNITS PER ASSY
-001N	D2549030513200		. LAVATORY A ASSY POST SB 25-1312 POST SB 26-1058 SEE SIL 25-117 FOR DET		RF
-001P	R225401145-002		. LAVATORY A ASSY POST VSB A2-254-25-080 SEE SIL 25-117 FOR DET		RF
-001Q	R225401134-018		. LAVATORY A ASSY POST VSB A2-254-25-046		RF
-001R	R225401153-000		. LAVATORY A ASSY POST VSB A2-254-25-047		RF
-001S	R225401137-006		. LAVATORY A ASSY POST VSB A2-254-25-131		RF
-001T	R225401137-008		. LAVATORY A ASSY POST VSB A2-254-25-131		RF
010A	D2549020700461		. . ATTACHMENT-LAVATORY NP used on 001A, 001D, 001E, 001J, 001K, 001P, 001R, 001S, 001T SEE 25-41-51-02A FOR DET		001
-010B	D2549030513261		. . ATTACHMENT-LAVATORY NP used on 001B, 001N SEE 25-41-51-02A FOR DET		001
-010C	D2549030510061		. . ATTACHMENT-LAVATORY NP used on 001C SEE 25-41-51-02A FOR DET		001
-010D	D2549030513061		. . ATTACHMENT-LAVATORY NP used on 001H, 001Q SEE 25-41-51-02A FOR DET		001
-010E	D2549020610061		. . ATTACHMENT-LAVATORY NP used on 001L SEE 25-41-51-02D FOR DET		001

- ITEM NOT ILLUSTRATED

FIG. ITEM	PART NUMBER	AIRLINE STOCK NUMBER	NOMENCLATURE 1234567		EFF CODE	UNITS PER ASSY
-010F	D2549030513061		. . ATTACHMENT-LAVATORY used on 001M SEE 25-41-51-02A FOR DET	NP		001
-010G	D2549030506061		. . ATTACHMENT-LAVATORY used on 001F SEE 25-41-51-020 FOR DET	NP		001
-010H	D2549020705861		. . ATTACHMENT-LAVATORY used on 001G SEE 25-41-51-02D FOR DET	NP		001
020A	D2549020602663		. . PANEL-CEILING used on 001A, 001D, 001E, 001G, 001J, 001K, 001L, 001P, 001R, 001S, 001T SEE 25-41-51-040 FOR DET	NP		001
-020B	D2549010513863		. . PANEL-CEILING used on 001B, 001N SEE 25-41-51-040 FOR DET	NP		001
-020C	D2549030506063		. . PANEL-CEILING used on 001C, 001F SEE 25-41-51-040 FOR DET	NP		001
-020D	D2549020602863		. . PANEL-CEILING used on 001H, 001M, 001Q SEE 25-41-51-040 FOR DET	NP		001
030A	D2549010512664		. . WALL-REAR used on 001A, 001D, 001E, 001G, 001K, 001L, 001R, 001S, 001T SEE 25-41-51-05B FOR DET	NP		001
-030B	D2549010600264		. . WALL-REAR used on 001B, 001N SEE 25-41-51-05D FOR DET	NP		001

- ITEM NOT ILLUSTRATED

FIG. ITEM	PART NUMBER	AIRLINE STOCK NUMBER	NOMENCLATURE 1234567		EFF CODE	UNITS PER ASSY
-030C	D2549030508464		. . WALL-REAR used on 001C, 001F SEE 25-41-51-05B FOR DET	NP		001
-030D	D2549010514464		. . WALL-REAR used on 001J, 001P SEE 25-41-51-05B FOR DET	NP		001
-030E	D2549020613664		. . WALL-REAR used on 001H, 001M, 001Q SEE 25-41-51-05B FOR DET	NP		001
040A	D2549030509265		. . WALL-SIDE used on 001A, 001S, 001T SEE 25-41-51-06M FOR DET	NP		001
-040B	D2549030511865		. . WALL-SIDE used on 001B SEE 25-41-51-06M FOR DET	NP		001
-040C	D2549030508465		. . WALL-SIDE used on 001C, 001F SEE 25-41-51-06K FOR DET	NP		001
-040D	D2549030511265		. . WALL-SIDE used on 001D SEE 25-41-51-06N FOR DET	NP		001
-040E	D2549030510865		. . WALL-SIDE used on 001E SEE 25-41-51-06M FOR DET	NP		001
-040F	D2549020614465		. . WALL-SIDE used on 001G, 001L SEE 25-41-51-06L FOR DET	NP		001
-040G	D2549030513065		. . WALL-SIDE used on 001H, 001Q SEE 25-41-51-06P FOR DET	NP		001

- ITEM NOT ILLUSTRATED

FIG. ITEM	PART NUMBER	AIRLINE STOCK NUMBER	NOMENCLATURE 1234567	EFF CODE	UNITS PER ASSY
-040H	D2549010514665		. . WALL-SIDE NP PRE VSB A2-254-25-080 used on 001J SEE 25-41-51-06N FOR DET		001
-040J	D2549010600665		. . WALL-SIDE NP used on 001K, 001R SEE 25-41-51-06M FOR DET		001
-040K	D2549020507065		. . WALL-SIDE NP used on 001M SEE 25-41-51-06M FOR DET		001
-040L	D2549030513265		. . WALL-SIDE NP used on 001N SEE 25-41-51-06T FOR DET		001
-040M	R22540114500265		. . WALL-SIDE NP POST VSB A2-254-25-080 used on 001P SEE 25-41-51-06N FOR DET		001
050A	D2549030505266		. . HOUSING NP used on 001A, 001S, 001T SEE 25-41-51-07B FOR DET		001
-050B	D2549010513866		. . HOUSING NP used on 001B SEE 25-41-51-07E FOR DET		001
-050C	D2549030506066		. . HOUSING NP used on 001C, 001F SEE 25-41-51-07C FOR DET		001
-050D	D2549020607066		. . HOUSING NP used on 001J, 001P SEE 25-41-51-07Y FOR DET		001
-050E	D2549030510866		. . HOUSING NP used on 001E SEE 25-41-51-07F FOR DET		001

- ITEM NOT ILLUSTRATED

FIG. ITEM	PART NUMBER	AIRLINE STOCK NUMBER	NOMENCLATURE 1234567		EFF CODE	UNITS PER ASSY
-050F	D2549030505866		. . HOUSING used on 001G, 001L SEE 25-41-51-07D FOR DET	NP		001
-050G	D2549020605666		. . HOUSING used on 001H, 001Q SEE 25-41-51-07D FOR DET	NP		001
-050H	D2549010511066		. . HOUSING used on 001K, 001R SEE 25-41-51-07B FOR DET	NP		001
-050J	D2549020506266		. . HOUSING used on 001M SEE 25-41-51-07D FOR DET	NP		001
-050K	D2549030511266		. . HOUSING used on 001D SEE 25-41-51-07G FOR DET	NP		001
-050L	D2549030513266		. . HOUSING used on 001N SEE 25-41-51-07J FOR DET	NP		001
060A	D2549010500069		. . DOOR INSTL used on 001A, 001B, 001D, 001E, 001G, 001H, 001J, 001K, 001L, 001M, 001N, 001P, 001Q, 001R, 001S, 001T SEE 25-41-51-100 FOR DET	NP		001
-060B	D2549020401269		. . DOOR INSTL POST SB 25-1314 used on 001C, 001F SEE 25-41-51-10A FOR DET	NP		001
070A	A225400276-586		. . DOOR ASSY-SINGLE used on 001A, 001S, 001T SEE 25-41-51-11E FOR DET			001

- ITEM NOT ILLUSTRATED

FIG. ITEM	PART NUMBER	AIRLINE STOCK NUMBER	NOMENCLATURE 1234567	EFF CODE	UNITS PER ASSY
-070B	A225400276-574		. . DOOR ASSY-SINGLE used on 001B, 001N SEE 25-41-51-11E FOR DET		001
-070C	A2254002768930		. . DOOR ASSY-SINGLE POST SB 25-1314 used on 001C, 001F SEE 25-41-51-11N FOR DET		001
-070D	A225400276-578		. . DOOR ASSY-SINGLE used on 001D SEE 25-41-51-11F FOR DET		001
-070E	A225400276-576		. . DOOR ASSY-SINGLE used on 001E SEE 25-41-51-11E FOR DET		001
-070F	A225400276-588		. . DOOR ASSY-SINGLE used on 001G SEE 25-41-51-11F FOR DET		001
-070G	A225400276-570		. . DOOR ASSY-SINGLE used on 001H, 001Q SEE 25-41-51-11E FOR DET		001
-070H	A225400276-592		. . DOOR ASSY-SINGLE used on 001J, 001P SEE 25-41-51-11E FOR DET		001
-070J	A225400276-584		. . DOOR ASSY-SINGLE used on 001K, 001R SEE 25-41-51-11F FOR DET		001
-070K	A225400276-546		. . DOOR ASSY-SINGLE used on 001L SEE 25-41-51-11C FOR DET		001
-070L	A225400276-590		. . DOOR ASSY-SINGLE used on 001M SEE 25-41-51-11E FOR DET		001

- ITEM NOT ILLUSTRATED

FIG. ITEM	PART NUMBER	AIRLINE STOCK NUMBER	NOMENCLATURE 1234567	EFF CODE	UNITS PER ASSY
080A	D2549020604271		. . TOILET UNIT AND TOILET SHROUD NP used on 001A, 001B, 001D, 001E, 001G, 001J, 001K, 001L, 001N, 001P, 001R, 001S, 001T SEE 25-41-51-12C FOR DET		001
-080B	D2549030506071		. . TOILET UNIT AND TOILET SHROUD NP used on 001C, 001F SEE 25-41-51-12C FOR DET		001
-080C	D2549020506271		. . TOILET UNIT AND TOILET SHROUD NP used on 001H, 001M, 001Q SEE 25-41-51-12C FOR DET		001
090A	D2549020610672		. . PAN-FLOOR NP PRE VSB A2-254-25-131 used on 001A SEE 25-41-51-13C FOR DET		001
-090B	D2549010513872		. . PAN-FLOOR NP used on 001B, 001N SEE 25-41-51-13C FOR DET		001
-090C	D2549030411672		. . PAN-FLOOR NP used on 001C, 001F SEE 25-41-51-13R FOR DET		001
-090D	D2549030511272		. . PAN-FLOOR NP used on 001D SEE 25-41-51-13D FOR DET		001
-090E	D2549020702272		. . PAN-FLOOR NP used on 001E SEE 25-41-51-13D FOR DET		001
-090F	D2549020506272		. . PAN-FLOOR NP used on 001M SEE 25-41-51-13B FOR DET		001

- ITEM NOT ILLUSTRATED

FIG. ITEM	PART NUMBER	AIRLINE STOCK NUMBER	NOMENCLATURE 1234567	EFF CODE	UNITS PER ASSY
-090G	D2549020605672		. . PAN-FLOOR NP used on 001H, 001Q SEE 25-41-51-13B FOR DET		001
-090H	D2549010513072		. . PAN-FLOOR NP used on 001J, 001P SEE 25-41-51-13C FOR DET		001
-090J	D2549020604872		. . PAN-FLOOR NP used on 001K, 001R SEE 25-41-51-13C FOR DET		001
-090K	D2549030514072		. . PAN-FLOOR NP used on 001G, 001L SEE 25-41-51-13D FOR DET		001
-090L	R22540113700072		. . PAN-FLOOR NP POST VSB A2-254-25-131 used on 001S, 001T SEE 25-41-51-13C FOR DET		001
100A	D2549010512673		. . LIGHT-DOOR NP used on 001A, 001D, 001E, 001G, 001J, 001K, 001L, 001P, 001R, 001S, 001T SEE 25-41-51-140 FOR DET		001
-100B	D2549010600273		. . LIGHT-DOOR NP used on 001B, 001N SEE 25-41-51-14A FOR DET		001
-100C	D2549030508473		. . LIGHT-DOOR NP used on 001C, 001F SEE 25-41-51-140 FOR DET		001
-100D	D2549020613673		. . LIGHT-DOOR NP used on 001H, 001M, 001Q SEE 25-41-51-140 FOR DET		001

- ITEM NOT ILLUSTRATED

FIG. ITEM	PART NUMBER	AIRLINE STOCK NUMBER	NOMENCLATURE 1234567	EFF CODE	UNITS PER ASSY
110A	D2549010514074		. . WASHBASIN UNIT NP used on 001A, 001S, 001T SEE 25-41-51-15F FOR DET		001
-110B	D2549010510674		. . WASHBASIN UNIT NP used on 001B, 001K, 001N, 001R SEE 25-41-51-15F FOR DET		001
-110C	D2549030510874		. . WASHBASIN UNIT NP used on 001E SEE 25-41-51-15G FOR DET		001
-110D	D2549020704674		. . WASHBASIN UNIT NP used on 001C, 001F SEE 25-41-51-15G FOR DET		001
-110E	D2549020614474		. . WASHBASIN UNIT NP used on 001G, 001L SEE 25-41-51-15F FOR DET		001
-110F	D2549020613674		. . WASHBASIN UNIT NP used on 001H, 001Q SEE 25-41-51-15F FOR DET		001
-110G	D2549030509874		. . WASHBASIN UNIT NP used on 001J, 001P SEE 25-41-51-15G FOR DET		001
-110H	D2549030511274		. . WASHBASIN UNIT NP used on 001D SEE 25-41-51-15G FOR DET		001
-110J	D2549030509474		. . WASHBASIN UNIT NP used on 001M SEE 25-41-51-15F FOR DET		001
120A	D2549030504075		. . DOOR ASSY-WASHBASIN UNIT NP used on 001A, 001S, 001T SEE 25-41-51-16B FOR DET		001

- ITEM NOT ILLUSTRATED

FIG. ITEM	PART NUMBER	AIRLINE STOCK NUMBER	NOMENCLATURE 1234567	EFF CODE	UNITS PER ASSY
-120B	D2549020607075		. . DOOR ASSY-WASHBASIN UNIT NP used on 001B, 001D, 001E, 001G, 001J, 001K, 001L, 001N, 001P, 001R SEE 25-41-51-16B FOR DET		001
-120C	D2549030506075		. . DOOR ASSY-WASHBASIN UNIT NP used on 001C, 001F SEE 25-41-51-16B FOR DET		001
-120D	D2549030505475		. . DOOR ASSY-WASHBASIN UNIT NP used on 001H, 001M, 001Q SEE 25-41-51-16B FOR DET		001
130A	D2549030504876		. . PANEL ASSY-WASHBASIN UNIT NP used on 001A, 001B, 001D, 001E, 001G, 001J, 001L, 001N, 001P, 001S, 001T SEE 25-41-51-17C FOR DET		001
-130B	D2549030506076		. . PANEL ASSY-WASHBASIN UNIT NP used on 001C, 001F SEE 25-41-51-17C FOR DET		001
-130C	D2549020506276		. . PANEL ASSY-WASHBASIN UNIT NP used on 001H, 001M, 001Q SEE 25-41-51-17C FOR DET		001
-130D	D2549010510876		. . PANEL ASSY-WASHBASIN UNIT NP used on 001K, 001R SEE 25-41-51-17C FOR DET		001

- ITEM NOT ILLUSTRATED

FIG. ITEM	PART NUMBER	AIRLINE STOCK NUMBER	NOMENCLATURE 1234567		EFF CODE	UNITS PER ASSY
140A	D2549030504877		. . BIN-WASTE,CHUTE-WASTE AND EXTINGUISHER-FIRE used on 001A, 001B, 001C, 001D, 001E, 001F, 001G, 001H, 001J, 001K, 001L, 001N, 001P, 001Q, 001R, 001S, 001T SEE 25-41-51-180 FOR DET	NP		001
-140B	D2549020506277		. . BIN-WASTE,CHUTE-WASTE AND EXTINGUISHER-FIRE used on 001M SEE 25-41-51-180 FOR DET	NP		001
150A	D2549030505878		. . CABINET-SERVICE used on 001G, 001L SEE 25-41-51-19E FOR DET	NP		001
-150B	D2549010513878		. . CABINET-SERVICE used on 001B, 001N SEE 25-41-51-19F FOR DET	NP		001
-150C	D2549030506078		. . CABINET-SERVICE used on 001C, 001F SEE 25-41-51-19E FOR DET	NP		001
-150D	D2549030504878		. . CABINET-SERVICE PRE VSB A2-254-25-080 used on 001D, 001E, 001J, 001K, 001R SEE 25-41-51-19E FOR DET	NP		001
-150E	D2549020605678		. . CABINET-SERVICE used on 001H, 001Q SEE 25-41-51-19E FOR DET	NP		001
-150F	D2549020506278		. . CABINET-SERVICE used on 001M SEE 25-41-51-19E FOR DET	NP		001

- ITEM NOT ILLUSTRATED

FIG. ITEM	PART NUMBER	AIRLINE STOCK NUMBER	NOMENCLATURE 1234567		EFF CODE	UNITS PER ASSY
-150G	D2549030505278		. . CABINET-SERVICE used on 001A, 001S, 001T SEE 25-41-51-19E FOR DET	NP		001
-150H	R22540114500278		. . CABINET-SERVICE POST VSB A2-254-25-080 used on 001P SEE 25-41-51-19E FOR DET	NP		001
160A	D2549010512679		. . TABLE-NURSING used on 001A, 001D, 001G, 001J, 001K, 001L, 001P, 001R, 001S, 001T SEE 25-41-51-20A FOR DET	NP		001
-160B	D2549010600279		. . TABLE-NURSING used on 001B, 001N SEE 25-41-51-20A FOR DET	NP		001
-160C	D2549030508479		. . TABLE-NURSING used on 001C, 001F SEE 25-41-51-20A FOR DET	NP		001
-160D	D2549010510679		. . TABLE-NURSING used on 001E SEE 25-41-51-20A FOR DET	NP		001
-160E	D2549020613679		. . TABLE-NURSING used on 001H, 001M, 001Q SEE 25-41-51-20A FOR DET	NP		001
170A	D2549010514280		. . VENTILATION SYSTEM used on 001A, 001D, 001E, 001G, 001J, 001K, 001L, 001P, 001R, 001S, 001T SEE 25-41-51-21A FOR DET	NP		001
-170B	D2549030507680		. . VENTILATION SYSTEM used on 001B, 001N SEE 25-41-51-21A FOR DET	NP		001

- ITEM NOT ILLUSTRATED

FIG. ITEM	PART NUMBER	AIRLINE STOCK NUMBER	NOMENCLATURE 1234567	EFF CODE	UNITS PER ASSY
-170C	D2549030508480		. . VENTILATION SYSTEM NP used on 001C, 001F SEE 25-41-51-21A FOR DET		001
-170D	D2549020507080		. . VENTILATION SYSTEM NP used on 001H, 001M, 001Q SEE 25-41-51-21A FOR DET		001
180A	D2549030504881		. . WATER SYSTEM-POTABLE NP used on 001A, 001B, 001D, 001E, 001G, 001J, 001K, 001L, 001P, 001R, 001S, 001T SEE 25-41-51-22D FOR DET		001
-180B	D2549030504081		. . WATER SYSTEM-POTABLE NP used on 001C, 001F SEE 25-41-51-22G FOR DET		001
-180C	D2549030507881		. . WATER SYSTEM-POTABLE NP used on 001H, 001Q SEE 25-41-51-22D FOR DET		001
-180D	D2549020506281		. . WATER SYSTEM-POTABLE NP used on 001M SEE 25-41-51-22E FOR DET		001
-180E	D2549030513281		. . WATER SYSTEM-POTABLE NP used on 001N SEE 25-41-51-22G FOR DET		001
190A	D2549030504882		. . WATER SYSTEM-WASTE NP used on 001A, 001D, 001G, 001L, 001S, 001T SEE 25-41-51-23B FOR DET		001
-190B	D2549010511082		. . WATER SYSTEM-WASTE NP used on 001B, 001E, 001J, 001K, 001P, 001R SEE 25-41-51-23B FOR DET		001

- ITEM NOT ILLUSTRATED

FIG. ITEM	PART NUMBER	AIRLINE STOCK NUMBER	NOMENCLATURE 1234567		EFF CODE	UNITS PER ASSY
-190C	D2549030506082		. . WATER SYSTEM-WASTE used on 001C, 001F SEE 25-41-51-23B FOR DET	NP		001
-190D	D2549020605682		. . WATER SYSTEM-WASTE used on 001H, 001Q SEE 25-41-51-23B FOR DET	NP		001
-190E	D2549020507282		. . WATER SYSTEM-WASTE used on 001M SEE 25-41-51-23B FOR DET	NP		001
-190F	D2549030405082		. . WATER SYSTEM-WASTE used on 001N SEE 25-41-51-23B FOR DET	NP		001
200A	D2549030508083		. . ELECTRICAL SYSTEM used on 001A, 001B, 001C, 001D, 001E, 001G, 001K, 001R, 001S, 001T SEE 25-41-51-26C FOR DET	NP		001
-200B	D2549030504883		. . ELECTRICAL SYSTEM used on 001F, 001L SEE 25-41-51-26C FOR DET	NP		001
-200C	D2549030509483		. . ELECTRICAL SYSTEM used on 001M SEE 25-41-51-26C FOR DET	NP		001
-200D	D2549010514883		. . ELECTRICAL SYSTEM used on 001H, 001J, 001P, 001Q SEE 25-41-51-26D FOR DET	NP		001
-200E	D2549030513283		. . ELECTRICAL SYSTEM used on 001N SEE 25-41-51-26E FOR DET	NP		001

- ITEM NOT ILLUSTRATED

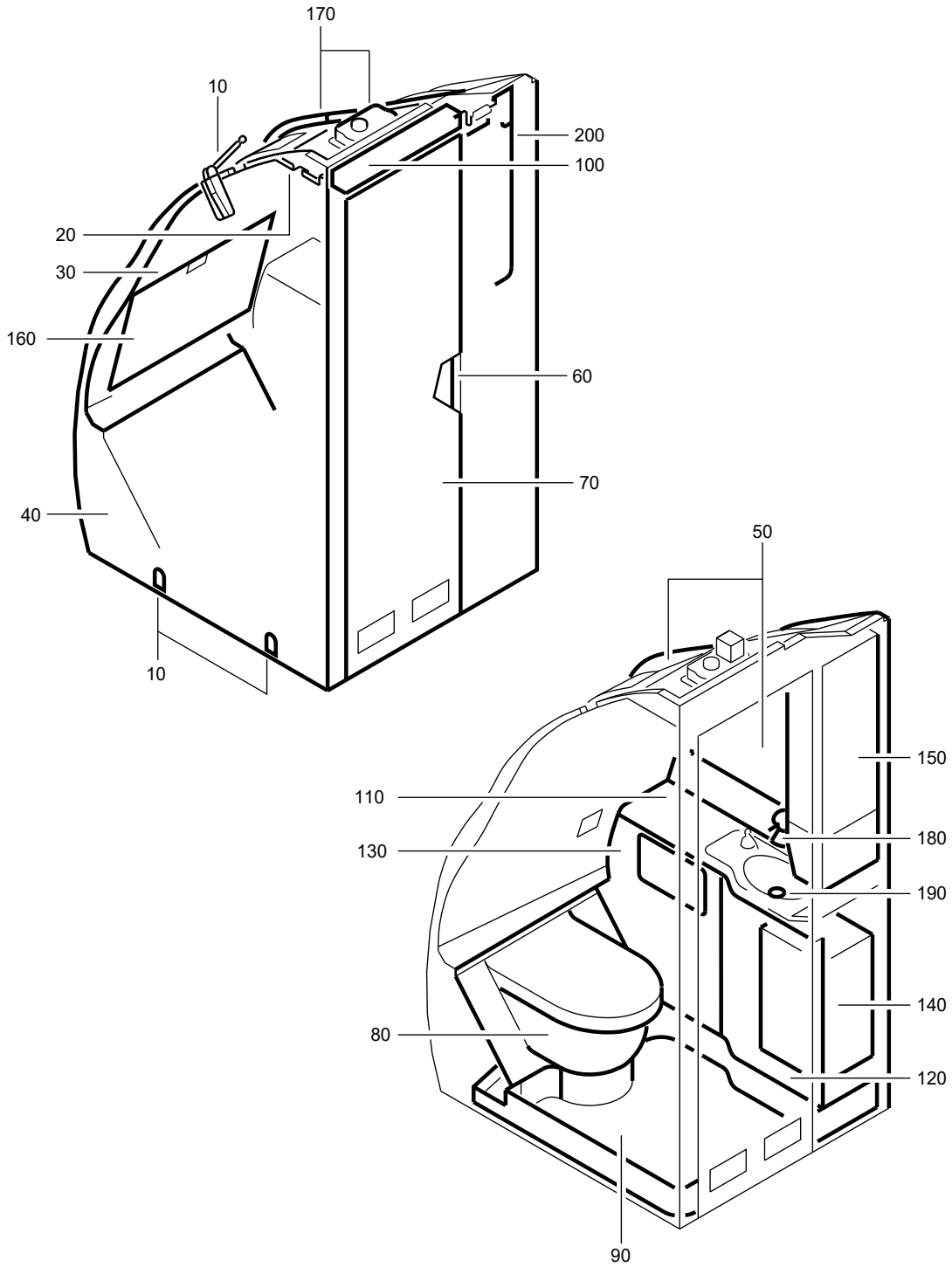

F_PL_254151_01_W_01_00

LAVATORY A ASSY
Figure 01W/EN254151SHEET01W01

FIG. ITEM	PART NUMBER	AIRLINE STOCK NUMBER	NOMENCLATURE 1234567	EFF CODE	UNITS PER ASSY
01W					
-001A	D2549020614800		. LAVATORY A ASSY SEE SIL 25-117 FOR DET		RF
-001B	D2549020702800		. LAVATORY A ASSY SEE SIL 25-117 FOR DET		RF
-001C	D2549020602200		. LAVATORY A ASSY SEE SIL 25-117 FOR DET		RF
-001D	D2549030509800		. LAVATORY A ASSY PRE VSB A2-254-25-080 SEE SIL 25-117 FOR DET		RF
-001E	D2549020700400		. LAVATORY A ASSY SEE SIL 25-117 FOR DET		RF
-001F	D2549020700000		. LAVATORY A ASSY SEE SIL 25-117 FOR DET		RF
-001G	D2549020701000		. LAVATORY A ASSY SEE SIL 25-117 FOR DET		RF
-001H	D2549020700800		. LAVATORY A ASSY SEE SIL 25-117 FOR DET		RF
-001J	D2549030514400		. LAVATORY A ASSY SEE SIL 25-117 FOR DET		RF
-001K	D2549010602400		. LAVATORY A ASSY SEE SIL 25-117 FOR DET		RF
-001L	D2549020704200		. LAVATORY A ASSY PRE VSB A2-254-25-042 SEE SIL 25-117 FOR DET		RF
-001M	D2549020703600		. LAVATORY A ASSY SEE SIL 25-117 FOR DET		RF

- ITEM NOT ILLUSTRATED

FIG. ITEM	PART NUMBER	AIRLINE STOCK NUMBER	NOMENCLATURE 1234567	EFF CODE	UNITS PER ASSY
-001N	D2549020700400		. LAVATORY A ASSY POST SB 25-1314 SEE SIL 25-117 FOR DET		RF
-001P	D2549020614800		. LAVATORY A ASSY SEE SIL 25-117 FOR DET		RF
-001Q	R225401142000		. LAVATORY A ASSY POST VSB A2-254-25-042 SEE SIL 25-117 FOR DET		RF
-001R	R225401172-006		. LAVATORY A ASSY POST VSB A2-254-25-080 SEE SIL 25-117 FOR DET		RF
010A	D2549020700461		. . ATTACHMENT-LAVATORY NP used on 001D, 001E, 001N, 001R SEE 25-41-51-02A FOR DET		001
-010B	D2549030510061		. . ATTACHMENT-LAVATORY NP used on 001B SEE 25-41-51-02A FOR DET		001
-010C	D2549020602661		. . ATTACHMENT-LAVATORY NP used on 001C, 001K, 001L, 001M, 001Q SEE 25-41-51-020 FOR DET		001
-010D	D2549020602861		. . ATTACHMENT-LAVATORY NP used on 001G SEE 25-41-51-020 FOR DET		001
-010E	D2549020700061		. . ATTACHMENT-LAVATORY NP used on 001F SEE 25-41-51-02A FOR DET		001
-010F	D2549020705861		. . ATTACHMENT-LAVATORY NP POST SB 25-1312 used on 001A, 001H, 001P SEE 25-41-51-02D FOR DET		001

- ITEM NOT ILLUSTRATED

FIG. ITEM	PART NUMBER	AIRLINE STOCK NUMBER	NOMENCLATURE 1234567		EFF CODE	UNITS PER ASSY
-010G	D2549020610061		. . ATTACHMENT-LAVATORY used on 001J SEE 25-41-51-02D FOR DET	NP		001
020A	D2549020602663		. . PANEL-CEILING used on 001A, 001C, 001D, 001E, 001H, 001J, 001K, 001L, 001M, 001N, 001P, 001Q, 001R SEE 25-41-51-040 FOR DET	NP		001
-020B	D2549030506063		. . PANEL-CEILING used on 001B SEE 25-41-51-040 FOR DET	NP		001
-020C	D2549020610263		. . PANEL-CEILING used on 001F SEE 25-41-51-040 FOR DET	NP		001
-020D	D2549020602863		. . PANEL-CEILING used on 001G SEE 25-41-51-040 FOR DET	NP		001
030A	D2549020614864		. . WALL-REAR used on 001A, 001P SEE 25-41-51-05D FOR DET	NP		001
-030B	D2549030508464		. . WALL-REAR used on 001B SEE 25-41-51-05B FOR DET	NP		001
-030C	D2549010514464		. . WALL-REAR used on 001C, 001K SEE 25-41-51-05B FOR DET	NP		001
-030D	D2549010512664		. . WALL-REAR used on 001D, 001E, 001H, 001J, 001L, 001M, 001N, 001Q, 001R SEE 25-41-51-05B FOR DET	NP		001

- ITEM NOT ILLUSTRATED

FIG. ITEM	PART NUMBER	AIRLINE STOCK NUMBER	NOMENCLATURE 1234567		EFF CODE	UNITS PER ASSY
-030E	D2549020612264		. . WALL-REAR used on 001F SEE 25-41-51-05C FOR DET	NP		001
-030F	D2549020613664		. . WALL-REAR used on 001G SEE 25-41-51-05B FOR DET	NP		001
040A	D2549030509065		. . WALL-SIDE used on 001M SEE 25-41-51-06K FOR DET	NP		001
-040B	D2549030508465		. . WALL-SIDE used on 001B SEE 25-41-51-06K FOR DET	NP		001
-040C	D2549020613265		. . WALL-SIDE used on 001C SEE 25-41-51-06M FOR DET	NP		001
-040D	D2549030509865		. . WALL-SIDE PRE VSB A2-254-25-080 used on 001D SEE 25-41-51-06N FOR DET	NP		001
-040E	D2549020700465		. . WALL-SIDE used on 001E SEE 25-41-51-06N FOR DET	NP		001
-040F	D2549020612265		. . WALL-SIDE used on 001F SEE 25-41-51-06L FOR DET	NP		001
-040G	D2549020701065		. . WALL-SIDE used on 001G SEE 25-41-51-06N FOR DET	NP		001
-040H	D2549020614465		. . WALL-SIDE used on 001H, 001J SEE 25-41-51-06L FOR DET	NP		001

- ITEM NOT ILLUSTRATED

FIG. ITEM	PART NUMBER	AIRLINE STOCK NUMBER	NOMENCLATURE 1234567		EFF CODE	UNITS PER ASSY
-040J	D2549010602465		. . WALL-SIDE used on 001K SEE 25-41-51-06P FOR DET	NP		001
-040K	D2549020704265		. . WALL-SIDE PRE VSB A2-254-25-042 used on 001L SEE 25-41-51-06P FOR DET	NP		001
-040L	D2549020614865		. . WALL-SIDE used on 001A, 001P SEE 25-41-51-06K FOR DET	NP		001
-040M	D2549020700465		. . WALL-SIDE used on 001N SEE 25-41-51-06L FOR DET	NP		001
-040N	R22540114200065		. . WALL-SIDE POST VSB A2-254-25-042 used on 001Q SEE 25-41-51-06P FOR DET	NP		001
-040P	R22540117200665		. . WALL-SIDE POST VSB A2-254-25-080 used on 001R SEE 25-41-51-06N FOR DET	NP		001
050A	D2549020607066		. . HOUSING used on 001A, 001E, 001P SEE 25-41-51-07Y FOR DET	NP		001
-050B	D2549030506066		. . HOUSING used on 001B SEE 25-41-51-07C FOR DET	NP		001
-050C	D2549020607666		. . HOUSING used on 001C, 001L, 001Q SEE 25-41-51-07D FOR DET	NP		001

- ITEM NOT ILLUSTRATED

FIG. ITEM	PART NUMBER	AIRLINE STOCK NUMBER	NOMENCLATURE 1234567	EFF CODE	UNITS PER ASSY
-050D	D2549010506866		. . HOUSING NP used on 001D, 001R SEE 25-41-51-07C FOR DET		001
-050E	D2549020610266		. . HOUSING NP used on 001F SEE 25-41-51-07E FOR DET		001
-050F	D2549020506266		. . HOUSING NP used on 001G SEE 25-41-51-07D FOR DET		001
-050G	D2549030505866		. . HOUSING NP used on 001H, 001J SEE 25-41-51-07D FOR DET		001
-050H	D2549010509866		. . HOUSING NP used on 001K SEE 25-41-51-07D FOR DET		001
-050J	D2549030509066		. . HOUSING NP used on 001M SEE 25-41-51-07F FOR DET		001
-050K	D2549020700466		. . HOUSING NP used on 001N SEE 25-41-51-07Y FOR DET		001
060A	D2549010500069		. . DOOR INSTL NP used on 001A, 001C, 001D, 001E, 001F, 001G, 001H, 001J, 001K, 001L, 001M, 001P, 001Q, 001R SEE 25-41-51-100 FOR DET		001
-060B	D2549020401269		. . DOOR INSTL NP POST SB 25-1314 used on 001B, 001N SEE 25-41-51-10A FOR DET		001

- ITEM NOT ILLUSTRATED

FIG. ITEM	PART NUMBER	AIRLINE STOCK NUMBER	NOMENCLATURE 1234567	EFF CODE	UNITS PER ASSY
070A	A225400276-592		. . DOOR ASSY-SINGLE used on 001A, 001M, 001P SEE 25-41-51-11E FOR DET		001
-070B	A2254002768930		. . DOOR ASSY-SINGLE POST SB 25-1314 used on 001B SEE 25-41-51-11N FOR DET		001
-070C	A225400276-938		. . DOOR ASSY-SINGLE used on 001C SEE 25-41-51-11F FOR DET		001
-070D	A225400276-934		. . DOOR ASSY-SINGLE used on 001D, 001R SEE 25-41-51-11F FOR DET		001
-070E	A225400276-942		. . DOOR ASSY-SINGLE used on 001E, 001N SEE 25-41-51-11F FOR DET		001
-070F	A225400276-940		. . DOOR ASSY-SINGLE used on 001F SEE 25-41-51-11F FOR DET		001
-070G	A225400276-590		. . DOOR ASSY-SINGLE used on 001G SEE 25-41-51-11E FOR DET		001
-070H	A225400276-588		. . DOOR ASSY-SINGLE used on 001H, 001J SEE 25-41-51-11F FOR DET		001
-070J	A225400276-584		. . DOOR ASSY-SINGLE used on 001K SEE 25-41-51-11F FOR DET		001
-070K	A225400276-944		. . DOOR ASSY-SINGLE used on 001L, 001Q SEE 25-41-51-11F FOR DET		001

- ITEM NOT ILLUSTRATED

FIG. ITEM	PART NUMBER	AIRLINE STOCK NUMBER	NOMENCLATURE 1234567	EFF CODE	UNITS PER ASSY
080A	D2549020604271		. . TOILET UNIT AND TOILET SHROUD NP used on 001A, 001D, 001H, 001J, 001K, 001L, 001P, 001Q, 001R SEE 25-41-51-12C FOR DET		001
-080B	D2549030506071		. . TOILET UNIT AND TOILET SHROUD NP used on 001B SEE 25-41-51-12C FOR DET		001
-080C	D2549020607671		. . TOILET UNIT AND TOILET SHROUD NP used on 001C, 001E, 001N SEE 25-41-51-12C FOR DET		001
080D	D2549020610271		. . TOILET UNIT AND TOILET SHROUD NP used on 001F SEE 25-41-51-12C FOR DET		001
-080E	D2549020506271		. . TOILET UNIT AND TOILET SHROUD NP used on 001G SEE 25-41-51-12C FOR DET		001
-080F	D2549010510271		. . TOILET UNIT AND TOILET SHROUD NP used on 001M SEE 25-41-51-12C FOR DET		001
090A	D2549010510272		. . PAN-FLOOR NP used on 001A SEE 25-41-51-13B FOR DET		001
-090B	D2549030411672		. . PAN-FLOOR NP used on 001B SEE 25-41-51-13R FOR DET		001

- ITEM NOT ILLUSTRATED

FIG. ITEM	PART NUMBER	AIRLINE STOCK NUMBER	NOMENCLATURE 1234567	EFF CODE	UNITS PER ASSY
-090C	D2549020604872		. . PAN-FLOOR NP used on 001C, 001E SEE 25-41-51-13C FOR DET		001
-090D	D2549030507072		. . PAN-FLOOR NP used on 001D, 001R SEE 25-41-51-13C FOR DET		001
-090E	D2549020700072		. . PAN-FLOOR NP used on 001F SEE 25-41-51-13D FOR DET		001
-090F	D2549020506272		. . PAN-FLOOR NP used on 001G SEE 25-41-51-13B FOR DET		001
-090G	D2549030611472		. . PAN-FLOOR NP used on 001H SEE 25-41-51-13H FOR DET		001
-090H	D2549030514072		. . PAN-FLOOR NP used on 001J SEE 25-41-51-13D FOR DET		001
-090J	D2549030504072		. . PAN-FLOOR NP used on 001K SEE 25-41-51-13B FOR DET		001
-090K	D2549020704272		. . PAN-FLOOR NP used on 001L, 001Q SEE 25-41-51-13D FOR DET		001
-090L	D2549020606072		. . PAN-FLOOR NP used on 001M SEE 25-41-51-13C FOR DET		001
-090M	D2549020700472		. . PAN-FLOOR NP used on 001N SEE 25-41-51-13V FOR DET		001

- ITEM NOT ILLUSTRATED

FIG. ITEM	PART NUMBER	AIRLINE STOCK NUMBER	NOMENCLATURE 1234567		EFF CODE	UNITS PER ASSY
-090N	D2549020508472		. . PAN-FLOOR POST SB 25-1289 used on 001P SEE 25-41-51-13V FOR DET	NP		001
100A	D2549010512673		. . LIGHT-DOOR used on 001A, 001C, 001D, 001E, 001H, 001J, 001K, 001L, 001M, 001N, 001P, 001Q, 001R SEE 25-41-51-140 FOR DET	NP		001
-100B	D2549030508473		. . LIGHT-DOOR used on 001B SEE 25-41-51-140 FOR DET	NP		001
-100C	D2549020612273		. . LIGHT-DOOR used on 001F SEE 25-41-51-14A FOR DET	NP		001
-100D	D2549020613673		. . LIGHT-DOOR used on 001G SEE 25-41-51-140 FOR DET	NP		001
110A	D2549010514074		. . WASHBASIN UNIT used on 001F SEE 25-41-51-15F FOR DET	NP		001
-110B	D2549020704674		. . WASHBASIN UNIT used on 001B SEE 25-41-51-15G FOR DET	NP		001
-110C	D2549020612674		. . WASHBASIN UNIT used on 001C SEE 25-41-51-15F FOR DET	NP		001
-110D	D2549030509874		. . WASHBASIN UNIT used on 001D, 001R SEE 25-41-51-15G FOR DET	NP		001

- ITEM NOT ILLUSTRATED

FIG. ITEM	PART NUMBER	AIRLINE STOCK NUMBER	NOMENCLATURE 1234567		EFF CODE	UNITS PER ASSY
-110E	D2549010510674		. . WASHBASIN UNIT used on 001E, 001M, 001N SEE 25-41-51-15F FOR DET	NP		001
-110F	D2549030509474		. . WASHBASIN UNIT used on 001G SEE 25-41-51-15F FOR DET	NP		001
-110G	D2549020614474		. . WASHBASIN UNIT used on 001H, 001J SEE 25-41-51-15F FOR DET	NP		001
-110H	D2549010600074		. . WASHBASIN UNIT used on 001K SEE 25-41-51-15D FOR DET	NP		001
-110J	D2549020704274		. . WASHBASIN UNIT used on 001L, 001Q SEE 25-41-51-15G FOR DET	NP		001
-110K	D2549020614874		. . WASHBASIN UNIT used on 001A, 001P SEE 25-41-51-15G FOR DET	NP		001
120A	D2549020607075		. . DOOR ASSY-WASHBASIN UNIT used on 001A, 001D, 001H, 001J, 001K, 001L, 001P, 001Q, 001R SEE 25-41-51-16B FOR DET	NP		001
-120B	D2549030506075		. . DOOR ASSY-WASHBASIN UNIT used on 001B SEE 25-41-51-16B FOR DET	NP		001
-120C	D2549020607675		. . DOOR ASSY-WASHBASIN UNIT used on 001C, 001E, 001N SEE 25-41-51-16C FOR DET	NP		001

- ITEM NOT ILLUSTRATED

FIG. ITEM	PART NUMBER	AIRLINE STOCK NUMBER	NOMENCLATURE 1234567	EFF CODE	UNITS PER ASSY
-120D	D2549020610275		. . DOOR ASSY-WASHBASIN UNIT NP used on 001F SEE 25-41-51-16B FOR DET		001
-120E	D2549030505475		. . DOOR ASSY-WASHBASIN UNIT NP used on 001G SEE 25-41-51-16B FOR DET		001
-120F	D2549010509475		. . DOOR ASSY-WASHBASIN UNIT NP used on 001M SEE 25-41-51-16B FOR DET		001
130A	D2549030504876		. . PANEL ASSY-WASHBASIN UNIT NP used on 001A, 001D, 001H, 001J, 001K, 001L, 001P, 001Q, 001R SEE 25-41-51-17C FOR DET		001
-130B	D2549030506076		. . PANEL ASSY-WASHBASIN UNIT NP used on 001B SEE 25-41-51-17C FOR DET		001
-130C	D2549020607676		. . PANEL ASSY-WASHBASIN UNIT NP used on 001C, 001E, 001N SEE 25-41-51-17C FOR DET		001
-130D	D2549020610276		. . PANEL ASSY-WASHBASIN UNIT NP used on 001F SEE 25-41-51-17C FOR DET		001
-130E	D2549020506276		. . PANEL ASSY-WASHBASIN UNIT NP used on 001G SEE 25-41-51-17C FOR DET		001

- ITEM NOT ILLUSTRATED

FIG. ITEM	PART NUMBER	AIRLINE STOCK NUMBER	NOMENCLATURE 1234567		EFF CODE	UNITS PER ASSY
-130F	D2549010509476		. . PANEL ASSY-WASHBASIN UNIT used on 001M SEE 25-41-51-17C FOR DET	NP		001
-140A	D2549030504877		. . BIN-WASTE,CHUTE-WASTE AND EXTINGUISHER-FIRE used on 001A, 001B, 001C, 001D, 001E, 001H, 001J, 001K, 001L, 001M, 001N, 001P, 001Q, 001R SEE 25-41-51-180 FOR DET	NP		001
-140B	D2549010509477		. . BIN-WASTE,CHUTE-WASTE AND EXTINGUISHER-FIRE used on 001F SEE 25-41-51-180 FOR DET	NP		001
-140C	D2549020506277		. . BIN-WASTE,CHUTE-WASTE AND EXTINGUISHER-FIRE used on 001G SEE 25-41-51-180 FOR DET	NP		001
150A	D2549030504878		. . CABINET-SERVICE PRE VSB A2-254-25-042 PRE VSB A2-254-25-080 used on 001A, 001C, 001D, 001E, 001L, 001N, 001P SEE 25-41-51-19E FOR DET	NP		001
-150B	D2549030506078		. . CABINET-SERVICE used on 001B SEE 25-41-51-19E FOR DET	NP		001
-150C	D2549020610278		. . CABINET-SERVICE used on 001F SEE 25-41-51-19F FOR DET	NP		001
-150D	D2549020506278		. . CABINET-SERVICE used on 001G SEE 25-41-51-19E FOR DET	NP		001

- ITEM NOT ILLUSTRATED

FIG. ITEM	PART NUMBER	AIRLINE STOCK NUMBER	NOMENCLATURE 1234567		EFF CODE	UNITS PER ASSY
-150E	D2549030505878		. . CABINET-SERVICE used on 001H, 001J SEE 25-41-51-19E FOR DET	NP		001
-150F	D2549030504078		. . CABINET-SERVICE used on 001K SEE 25-41-51-19E FOR DET	NP		001
-150G	D2549010510278		. . CABINET-SERVICE used on 001M SEE 25-41-51-19F FOR DET	NP		001
-150H	R22540114200078		. . CABINET-SERVICE POST VSB A2-254-25-042 used on 001Q SEE 25-41-51-19E FOR DET	NP		001
-150J	R22540114500278		. . CABINET-SERVICE POST VSB A2-254-25-080 used on 001R SEE 25-41-51-19E FOR DET	NP		001
160A	D2549010512679		. . TABLE-NURSING used on 001A, 001H, 001J, 001K, 001L, 001M, 001P, 001Q SEE 25-41-51-20A FOR DET	NP		001
-160B	D2549030508479		. . TABLE-NURSING used on 001B SEE 25-41-51-20A FOR DET	NP		001
-160C	D2549010510679		. . TABLE-NURSING used on 001C, 001D, 001E, 001N, 001R SEE 25-41-51-20A FOR DET	NP		001
-160D	D2549020613679		. . TABLE-NURSING used on 001G SEE 25-41-51-20A FOR DET	NP		001

- ITEM NOT ILLUSTRATED

FIG. ITEM	PART NUMBER	AIRLINE STOCK NUMBER	NOMENCLATURE 1234567		EFF CODE	UNITS PER ASSY
-160E	D2549020612279		. . TABLE-NURSING used on 001F SEE 25-41-51-20A FOR DET	NP		001
170A	D2549010514280		. . VENTILATION SYSTEM used on 001A, 001C, 001D, 001E, 001H, 001J, 001K, 001L, 001M, 001N, 001P, 001Q, 001R SEE 25-41-51-21A FOR DET	NP		001
-170B	D2549030508480		. . VENTILATION SYSTEM used on 001B SEE 25-41-51-21A FOR DET	NP		001
-170C	D2549020612280		. . VENTILATION SYSTEM used on 001F SEE 25-41-51-21A FOR DET	NP		001
-170D	D2549020507080		. . VENTILATION SYSTEM used on 001G SEE 25-41-51-21A FOR DET	NP		001
180A	D2549030504881		. . WATER SYSTEM-POTABLE used on 001A, 001C, 001D, 001E, 001F, 001H, 001J, 001K, 001L, 001M, 001N, 001P, 001Q, 001R SEE 25-41-51-22D FOR DET	NP		001
-180B	D2549030507881		. . WATER SYSTEM-POTABLE used on 001B SEE 25-41-51-22D FOR DET	NP		001
-180C	D2549020506281		. . WATER SYSTEM-POTABLE used on 001G SEE 25-41-51-22E FOR DET	NP		001
190A	D2549030504882		. . WATER SYSTEM-WASTE used on 001A, 001F, 001H, 001J, 001P SEE 25-41-51-23B FOR DET	NP		001

- ITEM NOT ILLUSTRATED

FIG. ITEM	PART NUMBER	AIRLINE STOCK NUMBER	NOMENCLATURE 1234567		EFF CODE	UNITS PER ASSY
-190B	D2549020605682		. . WATER SYSTEM-WASTE used on 001B SEE 25-41-51-23B FOR DET	NP		001
-190C	D2549010511082		. . WATER SYSTEM-WASTE used on 001C, 001D, 001K, 001L, 001M, 001Q, 001R SEE 25-41-51-23B FOR DET	NP		001
-190D	D2549020506282		. . WATER SYSTEM-WASTE used on 001G SEE 25-41-51-23B FOR DET	NP		001
-190E	D2549030504082		. . WATER SYSTEM-WASTE used on 001E, 001N SEE 25-41-51-23B FOR DET	NP		001
200A	D2549030508083		. . ELECTRICAL SYSTEM used on 001A, 001B, 001E, 001H, 001N, 001P SEE 25-41-51-26C FOR DET	NP		001
-200B	D2549030504883		. . ELECTRICAL SYSTEM used on 001C, 001J, 001K, 001L, 001M, 001Q SEE 25-41-51-26C FOR DET	NP		001
-200C	D2549030509883		. . ELECTRICAL SYSTEM used on 001D, 001R SEE 25-41-51-26D FOR DET	NP		001
-200D	D2549030512283		. . ELECTRICAL SYSTEM used on 001F SEE 25-41-51-26C FOR DET	NP		001
-200E	D2549020506283		. . ELECTRICAL SYSTEM used on 001G SEE 25-41-51-26C FOR DET	NP		001

- ITEM NOT ILLUSTRATED

THIS PAGE IS INTENTIONALLY LEFT BLANK

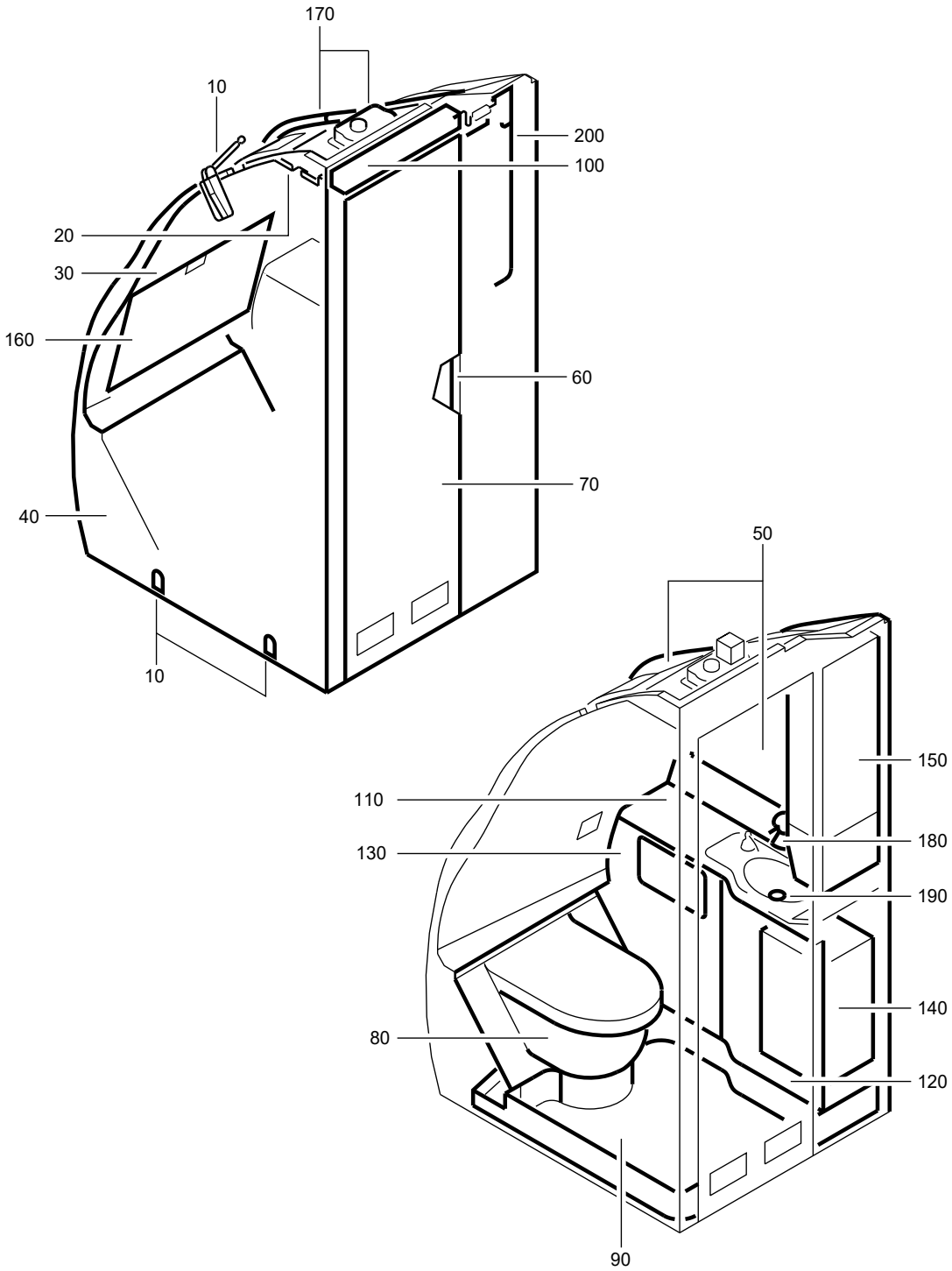

F_PL_254151_01_X_01_00

LAVATORY A ASSY
Figure 01X/EN254151SHEET01X01

FIG. ITEM	PART NUMBER	AIRLINE STOCK NUMBER	NOMENCLATURE 1234567	EFF CODE	UNITS PER ASSY
01X					
-001A	D2549020703800		. LAVATORY A ASSY SEE SIL 25-117 FOR DET		RF
-001B	D2549030514200		. LAVATORY A ASSY SEE SIL 25-117 FOR DET		RF
-001C	D2549030507400		. LAVATORY A ASSY PRE VSB A2-254-25-054 SEE SIL 25-117 FOR DET		RF
-001D	D2549010602200		. LAVATORY A ASSY SEE SIL 25-117 FOR DET		RF
-001E	D2549030512400		. LAVATORY A ASSY SEE SIL 25-117 FOR DET		RF
-001F	D2549010601400		. LAVATORY A ASSY SEE SIL 25-117 FOR DET		RF
-001G	D2549020703400		. LAVATORY A ASSY PRE VSB A2-254-25-042 SEE SIL 25-117 FOR DET		RF
-001H	D2549020704400		. LAVATORY A ASSY PRE VSB A2-254-25-042 SEE SIL 25-117 FOR DET		RF
-001J	D2549010601600		. LAVATORY A ASSY SEE SIL 25-117 FOR DET		RF
-001K	D2549010601800		. LAVATORY A ASSY SEE SIL 25-117 FOR DET		RF
-001L	D2549010602600		. LAVATORY A ASSY SEE SIL 25-117 FOR DET		RF
-001M	D2549020700600		. LAVATORY A ASSY SEE SIL 25-117 FOR DET		RF

- ITEM NOT ILLUSTRATED

FIG. ITEM	PART NUMBER	AIRLINE STOCK NUMBER	NOMENCLATURE 1234567	EFF CODE	UNITS PER ASSY
-001N	D2549010601600		. LAVATORY A ASSY SEE SIL 25-117 FOR DET		RF
-001P	D2549020700600		. LAVATORY A ASSY SEE SIL 25-117 FOR DET		RF
-001Q	D2549010601400		. LAVATORY A ASSY SEE SIL 25-117 FOR DET		RF
-001R	R225401152-000		. LAVATORY A ASSY POST VSB A2-254-25-042 SEE SIL 25-117 FOR DET		RF
-001S	R225401142-002		. LAVATORY A ASSY POST VSB A2-254-25-042 SEE SIL 25-117 FOR DET		RF
-001T	R225401168-004		. LAVATORY A ASSY POST VSB A2-254-25-054 SEE SIL 25-117 FOR DET		RF
010A	D2549020700461		. . ATTACHMENT-LAVATORY NP used on 001A, 001B, 001D, 001E, 001F, 001G, 001H, 001J, 001M, 001N, 001P, 001Q, 001R, 001S SEE 25-41-51-02A FOR DET		001
-010B	D2549030507261		. . ATTACHMENT-LAVATORY NP used on 001C, 001T SEE 25-41-51-020 FOR DET		001
-010C	D2549010602661		. . ATTACHMENT-LAVATORY NP used on 001L SEE 25-41-51-02A FOR DET		001
-010D	D2549020705861		. . ATTACHMENT-LAVATORY NP used on 001K SEE 25-41-51-02D FOR DET		001

- ITEM NOT ILLUSTRATED

FIG. ITEM	PART NUMBER	AIRLINE STOCK NUMBER	NOMENCLATURE 1234567	EFF CODE	UNITS PER ASSY
020A	D2549020602663		. . PANEL-CEILING NP used on 001A, 001B, 001D, 001E, 001F, 001G, 001H, 001J, 001K, 001M, 001N, 001P, 001Q, 001R, 001S SEE 25-41-51-040 FOR DET		001
-020B	D2549030507263		. . PANEL-CEILING NP used on 001C, 001T SEE 25-41-51-040 FOR DET		001
-020C	D2549030505663		. . PANEL-CEILING NP used on 001L SEE 25-41-51-040 FOR DET		001
030A	D2549010512664		. . WALL-REAR NP used on 001A, 001B, 001D, 001E, 001F, 001G, 001H, 001J, 001M, 001N, 001P, 001Q, 001R, 001S SEE 25-41-51-05B FOR DET		001
-030B	D2549030508664		. . WALL-REAR NP used on 001C, 001T SEE 25-41-51-05B FOR DET		001
-030C	D2549010501064		. . WALL-REAR NP used on 001K SEE 25-41-51-05A FOR DET		001
-030D	D2549010514064		. . WALL-REAR NP used on 001L SEE 25-41-51-05B FOR DET		001
040A	D2549030509065		. . WALL-SIDE NP used on 001A SEE 25-41-51-06K FOR DET		001
-040B	D2549030514265		. . WALL-SIDE NP used on 001B SEE 25-41-51-06P FOR DET		001

- ITEM NOT ILLUSTRATED

FIG. ITEM	PART NUMBER	AIRLINE STOCK NUMBER	NOMENCLATURE 1234567	EFF CODE	UNITS PER ASSY
-040C	D2549030510265		. . WALL-SIDE NP PRE VSB A2-254-25-054 used on 001C SEE 25-41-51-06N FOR DET		001
-040D	D2549010602065		. . WALL-SIDE NP used on 001D SEE 25-41-51-06N FOR DET		001
-040E	D2549030512465		. . WALL-SIDE NP used on 001E SEE 25-41-51-06P FOR DET		001
-040F	D2549030511065		. . WALL-SIDE NP used on 001F, 001Q SEE 25-41-51-06N FOR DET		001
-040G	D2549020703465		. . WALL-SIDE NP PRE VSB A2-254-25-042 used on 001G SEE 25-41-51-06P FOR DET		001
-040H	D2549020704265		. . WALL-SIDE NP PRE VSB A2-254-25-042 used on 001H SEE 25-41-51-06P FOR DET		001
-040J	D2549010601665		. . WALL-SIDE NP used on 001J, 001N SEE 25-41-51-06P FOR DET		001
-040K	D2549010502065		. . WALL-SIDE NP used on 001K SEE 25-41-51-48E FOR DET		001
-040L	D2549010602665		. . WALL-SIDE NP used on 001L SEE 25-41-51-06P FOR DET		001

- ITEM NOT ILLUSTRATED

FIG. ITEM	PART NUMBER	AIRLINE STOCK NUMBER	NOMENCLATURE 1234567		EFF CODE	UNITS PER ASSY
-040M	D2549020700465		. . WALL-SIDE used on 001M, 001P SEE 25-41-51-06N FOR DET	NP		001
-040N	R22540115200065		. . WALL-SIDE POST VSB A2-254-25-042 used on 001R SEE 25-41-51-06P FOR DET	NP		001
-040P	R22540114200065		. . WALL-SIDE POST VSB A2-254-25-042 used on 001S SEE 25-41-51-06P FOR DET	NP		001
-040Q	R22540116800465		. . WALL-SIDE POST VSB A2-254-25-054 used on 001T used on 001A SEE 25-41-51-06N FOR DET	NP		001
-050B	D2549020604266		. . HOUSING used on 001B SEE 25-41-51-07D FOR DET	NP		001
-050C	D2549030507266		. . HOUSING used on 001C, 001T SEE 25-41-51-07E FOR DET	NP		001
-050D	D2549010602066		. . HOUSING used on 001D SEE 25-41-51-07F FOR DET	NP		001
-050E	D2549020607066		. . HOUSING used on 001E, 001M, 001P SEE 25-41-51-07Y FOR DET	NP		001
-050F	D2549030511066		. . HOUSING used on 001F, 001Q SEE 25-41-51-07F FOR DET	NP		001

- ITEM NOT ILLUSTRATED

FIG. ITEM	PART NUMBER	AIRLINE STOCK NUMBER	NOMENCLATURE 1234567	EFF CODE	UNITS PER ASSY
-050G	D2549020703466		. . HOUSING NP used on 001G, 001R SEE 25-41-51-07G FOR DET		001
-050H	D2549020607666		. . HOUSING NP used on 001H, 001S SEE 25-41-51-07D FOR DET		001
-050J	D2549010513266		. . HOUSING NP used on 001J, 001N SEE 25-41-51-07E FOR DET		001
-050K	D2549010602666		. . HOUSING NP used on 001L SEE 25-41-51-07G FOR DET		001
-050L	D2549010501066		. . HOUSING NP used on 001K SEE 25-41-51-07Y FOR DET		001
060A	D2549010500069		. . DOOR INSTL NP used on 001A, 001B, 001C, 001D, 001E, 001F, 001G, 001H, 001J, 001K, 001L, 001M, 001N, 001P, 001Q, 001R, 001S, 001T SEE 25-41-51-100 FOR DET		001
070A	A225400276-592		. . DOOR ASSY-SINGLE used on 001A, 001K SEE 25-41-51-11E FOR DET		001
-070B	A225400276-936		. . DOOR ASSY-SINGLE used on 001B SEE 25-41-51-11G FOR DET		001
-070C	A225400276-932		. . DOOR ASSY-SINGLE used on 001C, 001T SEE 25-41-51-11D FOR DET		001

- ITEM NOT ILLUSTRATED

FIG. ITEM	PART NUMBER	AIRLINE STOCK NUMBER	NOMENCLATURE 1234567	EFF CODE	UNITS PER ASSY
-070D	A225400276-582		. . DOOR ASSY-SINGLE used on 001D SEE 25-41-51-11F FOR DET		001
-070E	A225400276-574		. . DOOR ASSY-SINGLE used on 001E SEE 25-41-51-11E FOR DET		001
-070F	A225400276-580		. . DOOR ASSY-SINGLE used on 001F, 001Q SEE 25-41-51-11F FOR DET		001
-070G	A225400276-946		. . DOOR ASSY-SINGLE used on 001G, 001R SEE 25-41-51-11G FOR DET		001
-070H	A225400276-944		. . DOOR ASSY-SINGLE used on 001H, 001S SEE 25-41-51-11F FOR DET		001
-070J	A225400276-594		. . DOOR ASSY-SINGLE used on 001J, 001N SEE 25-41-51-11G FOR DET		001
-070K	A225400276-558		. . DOOR ASSY-SINGLE used on 001L SEE 25-41-51-11D FOR DET		001
-070L	A225400276-942		. . DOOR ASSY-SINGLE used on 001M, 001P SEE 25-41-51-11F FOR DET		001
080A	D2549010510271		. . TOILET UNIT AND TOILET SHROUD NP used on 001A, 001J, 001K, 001N SEE 25-41-51-12C FOR DET		001
-080B	D2549030506271		. . TOILET UNIT AND TOILET SHROUD NP used on 001B SEE 25-41-51-12C FOR DET		001

- ITEM NOT ILLUSTRATED

FIG. ITEM	PART NUMBER	AIRLINE STOCK NUMBER	NOMENCLATURE 1234567		EFF CODE	UNITS PER ASSY
-080C	D2549030507271		. . TOILET UNIT AND TOILET SHROUD used on 001C, 001T SEE 25-41-51-12D FOR DET	NP		001
-080D	D2549010602071		. . TOILET UNIT AND TOILET SHROUD used on 001D SEE 25-41-51-12D FOR DET	NP		001
-080E	D2549020604271		. . TOILET UNIT AND TOILET SHROUD used on 001E, 001F, 001G, 001H, 001L, 001Q, 001R, 001S SEE 25-41-51-12C FOR DET	NP		001
-080F	D2549020607671		. . TOILET UNIT AND TOILET SHROUD used on 001M, 001P SEE 25-41-51-12C FOR DET	NP		001
090A	D2549020606072		. . PAN-FLOOR used on 001A SEE 25-41-51-13C FOR DET	NP		001
-090B	D2549030505272		. . PAN-FLOOR used on 001B SEE 25-41-51-13A FOR DET	NP		001
-090C	D2549020512472		. . PAN-FLOOR used on 001C, 001T SEE 25-41-51-13H FOR DET	NP		001
-090D	D2549030504672		. . PAN-FLOOR used on 001D SEE 25-41-51-13B FOR DET	NP		001
-090E	D2549030512472		. . PAN-FLOOR used on 001E SEE 25-41-51-13D FOR DET	NP		001

- ITEM NOT ILLUSTRATED

FIG. ITEM	PART NUMBER	AIRLINE STOCK NUMBER	NOMENCLATURE 1234567	EFF CODE	UNITS PER ASSY
-090F	D2549030511072		. . PAN-FLOOR NP used on 001F, 001Q SEE 25-41-51-13C FOR DET		001
-090G	D2549020704272		. . PAN-FLOOR NP used on 001G, 001H, 001R, 001S SEE 25-41-51-13D FOR DET		001
-090H	D2549030504072		. . PAN-FLOOR NP used on 001J SEE 25-41-51-13B FOR DET		001
-090J	D2549010502072		. . PAN-FLOOR NP used on 001K SEE 25-41-51-130 FOR DET		001
-090K	D2549020610672		. . PAN-FLOOR NP used on 001L SEE 25-41-51-13C FOR DET		001
-090L	D2549020604872		. . PAN-FLOOR NP used on 001M SEE 25-41-51-13C FOR DET		001
-090M	D2549010601672		. . PAN-FLOOR NP POST SB 25-1289 used on 001N SEE 25-41-51-13V FOR DET		001
-090N	D2549020700672		. . PAN-FLOOR NP POST SB 25-1289 used on 001P SEE 25-41-51-13V FOR DET		001
100A	D2549010512673		. . LIGHT-DOOR NP used on 001A, 001B, 001D, 001E, 001F, 001G, 001H, 001J, 001K, 001M, 001N, 001P, 001Q, 001R, 001S SEE 25-41-51-140 FOR DET		001

- ITEM NOT ILLUSTRATED

FIG. ITEM	PART NUMBER	AIRLINE STOCK NUMBER	NOMENCLATURE 1234567	EFF CODE	UNITS PER ASSY
-100B	D2549030508673		. . LIGHT-DOOR NP used on 001C, 001T SEE 25-41-51-14A FOR DET		001
-100C	D2549010514073		. . LIGHT-DOOR NP used on 001L SEE 25-41-51-14A FOR DET		001
110A	D2549010510674		. . WASHBASIN UNIT NP used on 001A, 001K, 001L SEE 25-41-51-15F FOR DET		001
-110B	D2549010514474		. . WASHBASIN UNIT NP used on 001B SEE 25-41-51-15F FOR DET		001
-110C	D2549030508674		. . WASHBASIN UNIT NP used on 001C, 001T SEE 25-41-51-15F FOR DET		001
-110D	D2549010602074		. . WASHBASIN UNIT NP used on 001D SEE 25-41-51-15G FOR DET		001
-110E	D2549010514074		. . WASHBASIN UNIT NP used on 001E SEE 25-41-51-15F FOR DET		001
-110F	D2549010601274		. . WASHBASIN UNIT NP used on 001F, 001Q SEE 25-41-51-15F FOR DET		001
-110G	D2549030514674		. . WASHBASIN UNIT NP used on 001G, 001J, 001N, 001R SEE 25-41-51-15G FOR DET		001
-110H	D2549020700674		. . WASHBASIN UNIT NP used on 001M, 001P SEE 25-41-51-15G FOR DET		001

- ITEM NOT ILLUSTRATED

FIG. ITEM	PART NUMBER	AIRLINE STOCK NUMBER	NOMENCLATURE 1234567		EFF CODE	UNITS PER ASSY
-110J	D2549020704474		. . WASHBASIN UNIT used on 001H, 001S SEE 25-41-51-15G FOR DET	NP		001
120A	D2549010509475		. . DOOR ASSY-WASHBASIN UNIT used on 001A, 001J, 001K, 001N SEE 25-41-51-16B FOR DET	NP		001
-120B	D2549030506275		. . DOOR ASSY-WASHBASIN UNIT used on 001B SEE 25-41-51-16C FOR DET	NP		001
-120C	D2549030507275		. . DOOR ASSY-WASHBASIN UNIT used on 001C, 001T SEE 25-41-51-16C FOR DET	NP		001
-120D	D2549030504675		. . DOOR ASSY-WASHBASIN UNIT used on 001D SEE 25-41-51-16B FOR DET	NP		001
-120E	D2549020607075		. . DOOR ASSY-WASHBASIN UNIT used on 001E, 001F, 001G, 001H, 001L, 001Q, 001R, 001S SEE 25-41-51-16B FOR DET	NP		001
-120F	D2549020607675		. . DOOR ASSY-WASHBASIN UNIT used on 001M, 001P SEE 25-41-51-16C FOR DET	NP		001
130A	D2549010509476		. . PANEL ASSY-WASHBASIN UNIT used on 001A, 001J, 001K, 001N SEE 25-41-51-17C FOR DET	NP		001

- ITEM NOT ILLUSTRATED

FIG. ITEM	PART NUMBER	AIRLINE STOCK NUMBER	NOMENCLATURE 1234567	EFF CODE	UNITS PER ASSY
-130B	D2549030506276		. . PANEL ASSY-WASHBASIN UNIT NP used on 001B SEE 25-41-51-17C FOR DET		001
-130C	D2549030507276		. . PANEL ASSY-WASHBASIN UNIT NP used on 001C, 001T SEE 25-41-51-17D FOR DET		001
-130D	D2549030504676		. . PANEL ASSY-WASHBASIN UNIT NP used on 001D SEE 25-41-51-17C FOR DET		001
-130E	D2549020607676		. . PANEL ASSY-WASHBASIN UNIT NP used on 001M, 001P SEE 25-41-51-17C FOR DET		001
-130F	D2549030511076		. . PANEL ASSY-WASHBASIN UNIT NP used on 001F, 001Q SEE 25-41-51-17D FOR DET		001
-130G	D2549030504876		. . PANEL ASSY-WASHBASIN UNIT NP used on 001E, 001G, 001H, 001L, 001R, 001S SEE 25-41-51-17C FOR DET		001
140A	D2549030504877		. . BIN-WASTE,CHUTE-WASTE AND EXTINGUISHER-FIRE NP used on 001A, 001B, 001C, 001D, 001E, 001F, 001G, 001H, 001J, 001K, 001L, 001M, 001N, 001P, 001Q, 001R, 001S, 001T SEE 25-41-51-180 FOR DET		001

- ITEM NOT ILLUSTRATED

FIG. ITEM	PART NUMBER	AIRLINE STOCK NUMBER	NOMENCLATURE 1234567	EFF CODE	UNITS PER ASSY
150A	D2549010510278		. . CABINET-SERVICE NP used on 001A, 001K SEE 25-41-51-19F FOR DET		001
-150B	D2549030504878		. . CABINET-SERVICE NP PRE VSB A2-254-25-042 used on 001B, 001E, 001F, 001G, 001H, 001M, 001P, 001Q SEE 25-41-51-19E FOR DET		001
-150C	D2549030507278		. . CABINET-SERVICE NP PRE VSB A2-254-25-054 used on 001C SEE 25-41-51-19F FOR DET		001
-150D	D2549030504678		. . CABINET-SERVICE NP used on 001D SEE 25-41-51-19E FOR DET		001
-150E	D2549030504078		. . CABINET-SERVICE NP used on 001J, 001N SEE 25-41-51-19E FOR DET		001
-150F	D2549010514078		. . CABINET-SERVICE NP used on 001L SEE 25-41-51-19E FOR DET		001
-150G	R22540114200078		. . CABINET-SERVICE NP POST VSB A2-254-25-042 used on 001R, 001S SEE 25-41-51-19E FOR DET		001
-150H	R22540116800478		. . CABINET-SERVICE NP POST VSB A2-254-25-054 used on 001T SEE 25-41-51-19F FOR DET		001

- ITEM NOT ILLUSTRATED

FIG. ITEM	PART NUMBER	AIRLINE STOCK NUMBER	NOMENCLATURE 1234567	EFF CODE	UNITS PER ASSY
160A	D2549010512679		. . TABLE-NURSING NP used on 001A, 001E, 001G, 001H, 001J, 001K, 001N, 001R, 001S SEE 25-41-51-20A FOR DET		001
-160B	D2549010510679		. . TABLE-NURSING NP used on 001B, 001F, 001M, 001P, 001Q SEE 25-41-51-20A FOR DET		001
-160C	D2549030508679		. . TABLE-NURSING NP used on 001C, 001T SEE 25-41-51-20A FOR DET		001
-160D	D2549010602079		. . TABLE-NURSING NP used on 001D SEE 25-41-51-20A FOR DET		001
-160E	D2549010514079		. . TABLE-NURSING NP used on 001L SEE 25-41-51-20A FOR DET		001
170A	D2549010514280		. . VENTILATION SYSTEM NP used on 001A, 001B, 001D, 001E, 001F, 001G, 001H, 001J, 001K, 001M, 001N, 001P, 001Q, 001R, 001S SEE 25-41-51-21A FOR DET		001
-170B	D2549030508680		. . VENTILATION SYSTEM NP used on 001C, 001T SEE 25-41-51-21A FOR DET		001
-170C	D2549010514080		. . VENTILATION SYSTEM NP used on 001L SEE 25-41-51-21A FOR DET		001

- ITEM NOT ILLUSTRATED

FIG. ITEM	PART NUMBER	AIRLINE STOCK NUMBER	NOMENCLATURE 1234567		EFF CODE	UNITS PER ASSY
180A	D2549030504881		. . WATER SYSTEM-POTABLE used on 001A, 001B, 001C, 001D, 001E, 001G, 001H, 001J, 001K, 001L, 001M, 001N, 001P, 001R, 001S, 001T SEE 25-41-51-22D FOR DET	NP		001
-180B	D2549010513681		. . WATER SYSTEM-POTABLE used on 001F, 001Q SEE 25-41-51-22H FOR DET	NP		001
190A	D2549010511082		. . WATER SYSTEM-WASTE used on 001A, 001C, 001D, 001G, 001H, 001J, 001K, 001L, 001N, 001R, 001S, 001T SEE 25-41-51-23B FOR DET	NP		001
-190B	D2549030504882		. . WATER SYSTEM-WASTE used on 001B, 001E SEE 25-41-51-23B FOR DET	NP		001
-190C	D2549030504082		. . WATER SYSTEM-WASTE used on 001F, 001M, 001P, 001Q SEE 25-41-51-23B FOR DET	NP		001
200A	D2549030508083		. . ELECTRICAL SYSTEM used on 001A, 001B, 001D, 001E, 001G, 001H, 001J, 001K, 001L, 001M, 001N, 001P, 001R, 001S SEE 25-41-51-26C FOR DET	NP		001
-200B	D2549030504883		. . ELECTRICAL SYSTEM used on 001C, 001T SEE 25-41-51-26C FOR DET	NP		001
-200C	D2549010513683		. . ELECTRICAL SYSTEM used on 001F SEE 25-41-51-26D FOR DET	NP		001

- ITEM NOT ILLUSTRATED

FIG. ITEM	PART NUMBER	AIRLINE STOCK NUMBER	NOMENCLATURE 1234567	EFF CODE	UNITS PER ASSY
-200D	D2549010601583		. . ELECTRICAL SYSTEM NP used on 001Q SEE 25-41-51-26D FOR DET		001

- ITEM NOT ILLUSTRATED

THIS PAGE IS INTENTIONALLY LEFT BLANK

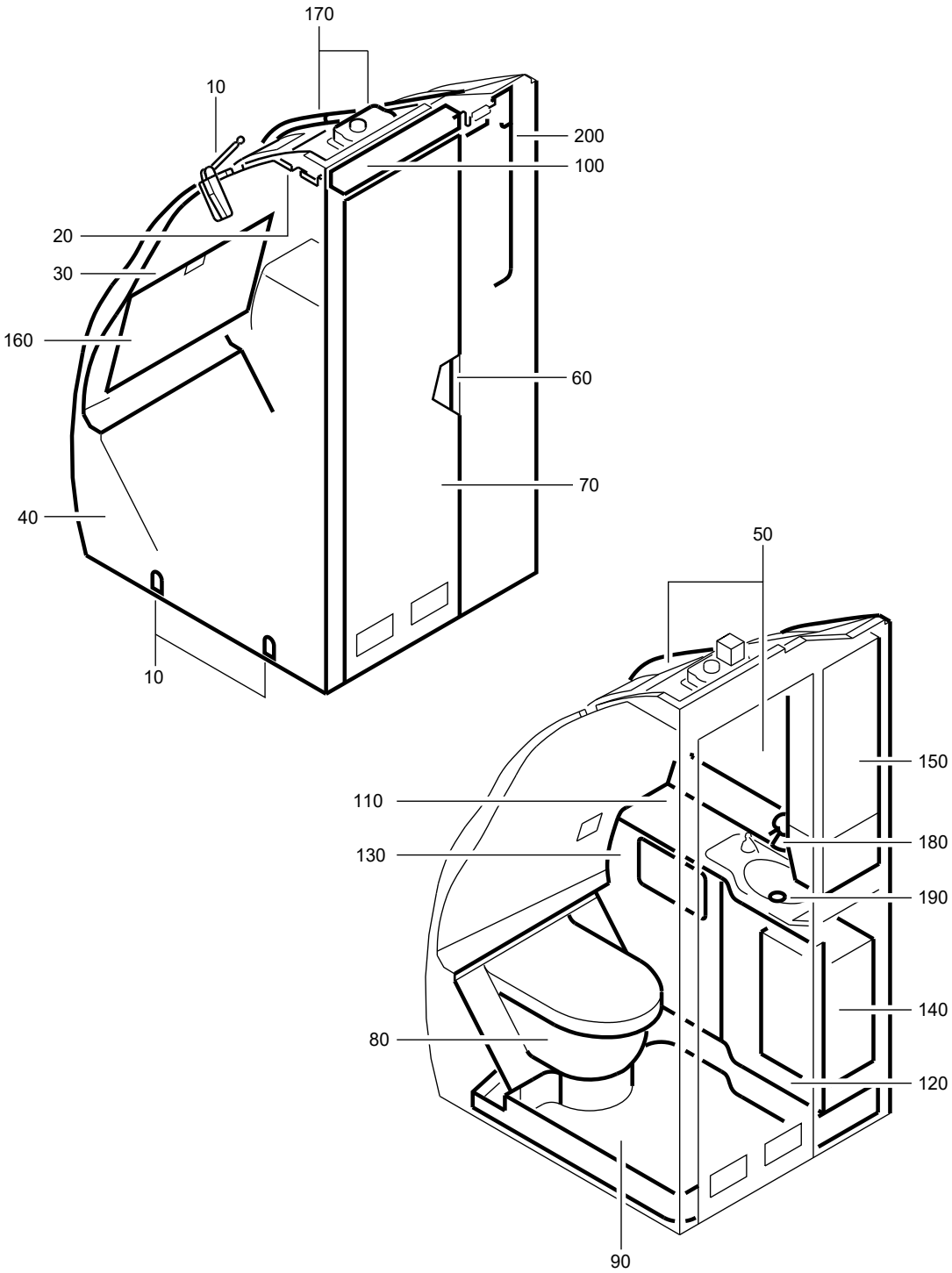

F_PL_254151_01_Y_01_00

LAVATORY A ASSY
Figure 01Y/EN254151SHEET01Y01

FIG. ITEM	PART NUMBER	AIRLINE STOCK NUMBER	NOMENCLATURE 1234567	EFF CODE	UNITS PER ASSY
01Y					
-001A	D2549030514600		. LAVATORY A ASSY SEE SIL 25-117 FOR DET		RF
-001B	D2549030513800		. LAVATORY A ASSY SEE SIL 25-117 FOR DET		RF
-001C	D2549020706800		. LAVATORY A ASSY SEE SIL 25-117 FOR DET		RF
-001D	D2549020700200		. LAVATORY A ASSY SEE SIL 25-117 FOR DET		RF
-001E	D2549020705400		. LAVATORY A ASSY SEE SIL 25-117 FOR DET		RF
-001F	D2549030600800		. LAVATORY A ASSY PRE VSB A2-254-25-054 SEE SIL 25-117 FOR DET		RF
-001G	D2549030600000		. LAVATORY A ASSY SEE SIL 25-117 FOR DET		RF
-001H	D2549020702600		. LAVATORY A ASSY SEE SIL 25-117 FOR DET		RF
-001J	D2549020705600		. LAVATORY A ASSY SEE SIL 25-117 FOR DET		RF
-001K	D2549010602800		. LAVATORY A ASSY SEE SIL 25-117 FOR DET		RF
-001L	D2549020702200		. LAVATORY A ASSY SEE SIL 25-117 FOR DET		RF
-001M	D2549010600800		. LAVATORY A ASSY SEE SIL 25-117 FOR DET		RF
-001N	D2549030514600		. LAVATORY A ASSY POST SB 25-1312 SEE SIL 25-117 FOR DET		RF

- ITEM NOT ILLUSTRATED

FIG. ITEM	PART NUMBER	AIRLINE STOCK NUMBER	NOMENCLATURE 1234567		EFF CODE	UNITS PER ASSY
-001P	D2549020700200		. LAVATORY A ASSY SEE SIL 25-117 FOR DET			RF
-001Q	D2549020705600		. LAVATORY A ASSY SEE SIL 25-117 FOR DET			RF
-001R	D2549030514600		. LAVATORY A ASSY SEE SIL 25-117 FOR DET			RF
-001S	R225401168-016		. LAVATORY A ASSY POST VSB A2-254-25-054 SEE SIL 25-117 FOR DET			RF
010A	D2549030514661		. . ATTACHMENT-LAVATORY used on 001A, 001C, 001D, 001K, 001P, 001R SEE 25-41-51-02A FOR DET	NP		001
-010B	D2549030513861		. . ATTACHMENT-LAVATORY used on 001B SEE 25-41-51-02A FOR DET	NP		001
-010C	D2549020700061		. . ATTACHMENT-LAVATORY used on 001E SEE 25-41-51-02A FOR DET	NP		001
-010D	D2549030510261		. . ATTACHMENT-LAVATORY used on 001F, 001S SEE 25-41-51-02A FOR DET	NP		001
-010E	D2549020702661		. . ATTACHMENT-LAVATORY used on 001H SEE 25-41-51-02A FOR DET	NP		001
-010F	D2549020700461		. . ATTACHMENT-LAVATORY used on 001L, 001M SEE 25-41-51-02A FOR DET	NP		001

- ITEM NOT ILLUSTRATED

FIG. ITEM	PART NUMBER	AIRLINE STOCK NUMBER	NOMENCLATURE 1234567		EFF CODE	UNITS PER ASSY
-010G	D2549020705861		. . ATTACHMENT-LAVATORY POST SB 25-1312 used on 001G, 001J, 001N, 001Q SEE 25-41-51-02D FOR DET	NP		001
020A	D2549020602663		. . PANEL-CEILING used on 001A, 001C, 001D, 001G, 001J, 001K, 001L, 001M, 001N, 001P, 001Q, 001R SEE 25-41-51-040 FOR DET	NP		001
-020B	D2549020602863		. . PANEL-CEILING used on 001B SEE 25-41-51-040 FOR DET	NP		001
-020C	D2549020610263		. . PANEL-CEILING used on 001E SEE 25-41-51-040 FOR DET	NP		001
-020D	D2549030507263		. . PANEL-CEILING used on 001F, 001S SEE 25-41-51-040 FOR DET	NP		001
-020E	D2549030505663		. . PANEL-CEILING used on 001H SEE 25-41-51-040 FOR DET	NP		001
030A	D2549010512664		. . WALL-REAR used on 001A, 001C, 001D, 001G, 001K, 001L, 001M, 001N, 001P, 001R SEE 25-41-51-05B FOR DET	NP		001
-030B	D2549030509464		. . WALL-REAR used on 001B SEE 25-41-51-05D FOR DET	NP		001
-030C	D2549020612264		. . WALL-REAR used on 001E SEE 25-41-51-05C FOR DET	NP		001

- ITEM NOT ILLUSTRATED

FIG. ITEM	PART NUMBER	AIRLINE STOCK NUMBER	NOMENCLATURE 1234567		EFF CODE	UNITS PER ASSY
-030D	D2549030508664		. . WALL-REAR used on 001F, 001S SEE 25-41-51-05B FOR DET	NP		001
-030E	D2549010514064		. . WALL-REAR used on 001H SEE 25-41-51-05B FOR DET	NP		001
030F	D2549020614864		. . WALL-REAR used on 001J, 001Q SEE 25-41-51-05D FOR DET	NP		001
040A	D2549030514665		. . WALL-SIDE used on 001A, 001N, 001R SEE 25-41-51-06P FOR DET	NP		001
-040B	D2549030513865		. . WALL-SIDE used on 001B SEE 25-41-51-06P FOR DET	NP		001
-040C	D2549030509065		. . WALL-SIDE used on 001C SEE 25-41-51-06K FOR DET	NP		001
-040D	D2549010600665		. . WALL-SIDE used on 001D, 001K, 001P SEE 25-41-51-06M FOR DET	NP		001
-040E	D2549020612265		. . WALL-SIDE used on 001E SEE 25-41-51-06L FOR DET	NP		001
-040F	D2549030510265		. . WALL-SIDE PRE VSB A2-254-25-054 used on 001F SEE 25-41-51-06N FOR DET	NP		001
-040G	D2549030511665		. . WALL-SIDE used on 001G SEE 25-41-51-06N FOR DET	NP		001

- ITEM NOT ILLUSTRATED

FIG. ITEM	PART NUMBER	AIRLINE STOCK NUMBER	NOMENCLATURE 1234567		EFF CODE	UNITS PER ASSY
-040H	D2549020702665		. . WALL-SIDE used on 001H SEE 25-41-51-06P FOR DET	NP		001
-040J	D2549020702265		. . WALL-SIDE used on 001L SEE 25-41-51-06Q FOR DET	NP		001
-040K	D2549010600865		. . WALL-SIDE used on 001M SEE 25-41-51-06Q FOR DET	NP		001
-040L	D2549020614865		. . WALL-SIDE used on 001J, 001Q SEE 25-41-51-06K FOR DET	NP		001
-040M	R22540116800465		. . WALL-SIDE POST VSB A2-254-25-054 used on 001S SEE 25-41-51-06N FOR DET	NP		001
050A	D2549030510666		. . HOUSING used on 001A, 001N, 001R SEE 25-41-51-07F FOR DET	NP		001
-050B	D2549020506266		. . HOUSING used on 001B SEE 25-41-51-07D FOR DET	NP		001
-050C	D2549020607666		. . HOUSING used on 001C SEE 25-41-51-07D FOR DET	NP		001
-050D	D2549010511066		. . HOUSING used on 001D, 001P SEE 25-41-51-07B FOR DET	NP		001
-050E	D2549020610266		. . HOUSING used on 001E SEE 25-41-51-07E FOR DET	NP		001

- ITEM NOT ILLUSTRATED

FIG. ITEM	PART NUMBER	AIRLINE STOCK NUMBER	NOMENCLATURE 1234567	EFF CODE	UNITS PER ASSY
-050F	D2549030507266		. . HOUSING NP used on 001F, 001S SEE 25-41-51-07E FOR DET		001
-050G	D2549030511666		. . HOUSING NP used on 001G SEE 25-41-51-07G FOR DET		001
-050H	D2549030505666		. . HOUSING NP used on 001H SEE 25-41-51-07D FOR DET		001
-050J	D2549020607066		. . HOUSING NP used on 001J, 001Q SEE 25-41-51-07Y FOR DET		001
-050K	D2549010600666		. . HOUSING NP used on 001K SEE 25-41-51-07F FOR DET		001
-050L	D2549020605466		. . HOUSING NP used on 001L SEE 25-41-51-07E FOR DET		001
-050M	D2549010509466		. . HOUSING NP used on 001M SEE 25-41-51-07D FOR DET		001
060A	D2549010500069		. . DOOR INSTL NP used on 001A, 001B, 001C, 001D, 001E, 001F, 001G, 001H, 001J, 001K, 001L, 001M, 001P, 001Q, 001R, 001S SEE 25-41-51-100 FOR DET		001
-060B	D2549020610069		. . DOOR INSTL NP used on 001N SEE 25-41-51-100 FOR DET		001

- ITEM NOT ILLUSTRATED

FIG. ITEM	PART NUMBER	AIRLINE STOCK NUMBER	NOMENCLATURE 1234567	EFF CODE	UNITS PER ASSY
070A	A225400276-574		. . DOOR ASSY-SINGLE used on 001A, 001N, 001R SEE 25-41-51-11E FOR DET		001
-070B	A225400276-590		. . DOOR ASSY-SINGLE used on 001B SEE 25-41-51-11E FOR DET		001
-070C	A225400276-592		. . DOOR ASSY-SINGLE used on 001C, 001J, 001Q SEE 25-41-51-11E FOR DET		001
-070D	A225400276-584		. . DOOR ASSY-SINGLE used on 001D, 001K, 001P SEE 25-41-51-11F FOR DET		001
-070E	A225400276-940		. . DOOR ASSY-SINGLE used on 001E SEE 25-41-51-11F FOR DET		001
-070F	A225400276-932		. . DOOR ASSY-SINGLE used on 001F, 001S SEE 25-41-51-11D FOR DET		001
-070G	A225400276-928		. . DOOR ASSY-SINGLE used on 001G SEE 25-41-51-11F FOR DET		001
-070H	A225400276-542		. . DOOR ASSY-SINGLE used on 001H SEE 25-41-51-11B FOR DET		001
-070J	A225400276-948		. . DOOR ASSY-SINGLE used on 001L SEE 25-41-51-11G FOR DET		001
-070K	A225400276-946		. . DOOR ASSY-SINGLE used on 001M SEE 25-41-51-11G FOR DET		001

- ITEM NOT ILLUSTRATED

FIG. ITEM	PART NUMBER	AIRLINE STOCK NUMBER	NOMENCLATURE 1234567	EFF CODE	UNITS PER ASSY
080A	D2549020604271		. . TOILET UNIT AND TOILET SHROUD NP used on 001A, 001D, 001J, 001K, 001N, 001P, 001Q, 001R SEE 25-41-51-12C FOR DET		001
-080B	D2549020506271		. . TOILET UNIT AND TOILET SHROUD NP used on 001B SEE 25-41-51-12C FOR DET		001
-080C	D2549010510271		. . TOILET UNIT AND TOILET SHROUD NP used on 001C, 001H, 001M SEE 25-41-51-12C FOR DET		001
-080D	D2549020610271		. . TOILET UNIT AND TOILET SHROUD NP used on 001E SEE 25-41-51-12C FOR DET		001
-080E	D2549030507271		. . TOILET UNIT AND TOILET SHROUD NP used on 001F, 001S SEE 25-41-51-12D FOR DET		001
-080F	D2549030511671		. . TOILET UNIT AND TOILET SHROUD NP used on 001G SEE 25-41-51-12D FOR DET		001
-080G	D2549020605471		. . TOILET UNIT AND TOILET SHROUD NP used on 001L SEE 25-41-51-12D FOR DET		001
090A	D2549030504072		. . PAN-FLOOR NP used on 001A, 001H, 001N, 001R SEE 25-41-51-13B FOR DET		001

- ITEM NOT ILLUSTRATED

FIG. ITEM	PART NUMBER	AIRLINE STOCK NUMBER	NOMENCLATURE 1234567		EFF CODE	UNITS PER ASSY
-090B	D2549020506272		. . PAN-FLOOR used on 001B SEE 25-41-51-13B FOR DET	NP		001
-090C	D2549020606072		. . PAN-FLOOR used on 001C SEE 25-41-51-13C FOR DET	NP		001
-090D	D2549020604872		. . PAN-FLOOR used on 001D, 001K, 001P SEE 25-41-51-13C FOR DET	NP		001
-090E	D2549020700072		. . PAN-FLOOR used on 001E, 001M SEE 25-41-51-13D FOR DET	NP		001
-090F	D2549020512472		. . PAN-FLOOR used on 001F, 001S SEE 25-41-51-13H FOR DET	NP		001
-090G	D2549030511672		. . PAN-FLOOR used on 001G SEE 25-41-51-13T FOR DET	NP		001
-090H	D2549010510272		. . PAN-FLOOR used on 001J SEE 25-41-51-13B FOR DET	NP		001
-090J	D2549020702272		. . PAN-FLOOR used on 001L SEE 25-41-51-13D FOR DET	NP		001
-090K	D2549020508472		. . PAN-FLOOR POST SB 25-1289 used on 001Q SEE 25-41-51-13V FOR DET	NP		001

- ITEM NOT ILLUSTRATED

FIG. ITEM	PART NUMBER	AIRLINE STOCK NUMBER	NOMENCLATURE 1234567		EFF CODE	UNITS PER ASSY
100A	D2549010512673		. . LIGHT-DOOR used on 001A, 001C, 001D, 001G, 001J, 001K, 001L, 001M, 001N, 001P, 001Q, 001R SEE 25-41-51-140 FOR DET	NP		001
-100B	D2549020613673		. . LIGHT-DOOR used on 001B SEE 25-41-51-140 FOR DET	NP		001
-100C	D2549020610273		. . LIGHT-DOOR used on 001E SEE 25-41-51-140 FOR DET	NP		001
-100D	D2549030508673		. . LIGHT-DOOR used on 001F, 001S SEE 25-41-51-14A FOR DET	NP		001
-100E	D2549010514073		. . LIGHT-DOOR used on 001H SEE 25-41-51-14A FOR DET	NP		001
110A	D2549030514674		. . WASHBASIN UNIT used on 001A, 001C, 001D, 001H, 001K, 001L, 001M, 001N, 001P, 001R SEE 25-41-51-15G FOR DET	NP		001
-110B	D2549030513874		. . WASHBASIN UNIT used on 001B SEE 25-41-51-15F FOR DET	NP		001
-110C	D2549020704674		. . WASHBASIN UNIT used on 001E SEE 25-41-51-15G FOR DET	NP		001
-110D	D2549030600874		. . WASHBASIN UNIT used on 001F, 001S SEE 25-41-51-15G FOR DET	NP		001

- ITEM NOT ILLUSTRATED

FIG. ITEM	PART NUMBER	AIRLINE STOCK NUMBER	NOMENCLATURE 1234567	EFF CODE	UNITS PER ASSY
-110E	D2549020700674		. . WASHBASIN UNIT NP used on 001G SEE 25-41-51-15G FOR DET		001
-110F	D2549020705674		. . WASHBASIN UNIT NP used on 001J, 001Q SEE 25-41-51-15H FOR DET		001
120A	D2549020607075		. . DOOR ASSY-WASHBASIN UNIT NP used on 001A, 001D, 001G, 001J, 001N, 001P, 001Q, 001R SEE 25-41-51-16B FOR DET		001
-120B	D2549030505475		. . DOOR ASSY-WASHBASIN UNIT NP used on 001B SEE 25-41-51-16B FOR DET		001
-120C	D2549010509475		. . DOOR ASSY-WASHBASIN UNIT NP used on 001C, 001H, 001M SEE 25-41-51-16B FOR DET		001
-120D	D2549020610275		. . DOOR ASSY-WASHBASIN UNIT NP used on 001E SEE 25-41-51-16B FOR DET		001
-120E	D2549030507275		. . DOOR ASSY-WASHBASIN UNIT NP used on 001F, 001S SEE 25-41-51-16C FOR DET		001
-120F	D2549030504075		. . DOOR ASSY-WASHBASIN UNIT NP used on 001K SEE 25-41-51-16B FOR DET		001

- ITEM NOT ILLUSTRATED

FIG. ITEM	PART NUMBER	AIRLINE STOCK NUMBER	NOMENCLATURE 1234567	EFF CODE	UNITS PER ASSY
-120G	D2549020605475		. . DOOR ASSY-WASHBASIN UNIT NP used on 001L SEE 25-41-51-16C FOR DET		001
130A	D2549030504876		. . PANEL ASSY-WASHBASIN UNIT NP used on 001A, 001G, 001J, 001K, 001N, 001Q, 001R SEE 25-41-51-17C FOR DET		001
-130B	D2549020506276		. . PANEL ASSY-WASHBASIN UNIT NP used on 001B SEE 25-41-51-17C FOR DET		001
-130C	D2549010509476		. . PANEL ASSY-WASHBASIN UNIT NP used on 001C, 001H, 001M SEE 25-41-51-17C FOR DET		001
-130D	D2549010510876		. . PANEL ASSY-WASHBASIN UNIT NP used on 001D, 001P SEE 25-41-51-17C FOR DET		001
-130E	D2549020610276		. . PANEL ASSY-WASHBASIN UNIT NP used on 001E SEE 25-41-51-17C FOR DET		001
-130F	D2549030507276		. . PANEL ASSY-WASHBASIN UNIT NP used on 001F, 001S SEE 25-41-51-17D FOR DET		001
-130G	D2549020605476		. . PANEL ASSY-WASHBASIN UNIT NP used on 001L SEE 25-41-51-17D FOR DET		001

- ITEM NOT ILLUSTRATED

FIG. ITEM	PART NUMBER	AIRLINE STOCK NUMBER	NOMENCLATURE 1234567	EFF CODE	UNITS PER ASSY
140A	D2549030504877		. . BIN-WASTE,CHUTE-WASTE AND EXTINGUISHER-FIRE NP used on 001A, 001C, 001D, 001F, 001G, 001H, 001J, 001K, 001L, 001N, 001P, 001Q, 001R, 001S SEE 25-41-51-180 FOR DET		001
-140B	D2549020506277		. . BIN-WASTE,CHUTE-WASTE AND EXTINGUISHER-FIRE NP used on 001B SEE 25-41-51-180 FOR DET		001
-140C	D2549010509477		. . BIN-WASTE,CHUTE-WASTE AND EXTINGUISHER-FIRE NP used on 001E, 001M SEE 25-41-51-180 FOR DET		001
150A	D2549030504878		. . CABINET-SERVICE NP used on 001A, 001D, 001G, 001J, 001K, 001L, 001N, 001P, 001Q, 001R SEE 25-41-51-19E FOR DET		001
-150B	D2549030505478		. . CABINET-SERVICE NP used on 001B SEE 25-41-51-19E FOR DET		001
-150C	D2549010510278		. . CABINET-SERVICE NP used on 001C SEE 25-41-51-19F FOR DET		001
-150D	D2549020610278		. . CABINET-SERVICE NP used on 001E SEE 25-41-51-19F FOR DET		001
-150E	D2549030507278		. . CABINET-SERVICE NP PRE VSB A2-254-25-054 used on 001F SEE 25-41-51-19F FOR DET		001

- ITEM NOT ILLUSTRATED

FIG. ITEM	PART NUMBER	AIRLINE STOCK NUMBER	NOMENCLATURE 1234567		EFF CODE	UNITS PER ASSY
-150F	D2549030505678		. . CABINET-SERVICE used on 001H SEE 25-41-51-19E FOR DET	NP		001
-150G	D2549010509478		. . CABINET-SERVICE used on 001M SEE 25-41-51-19E FOR DET	NP		001
-150H	R22540116800478		. . CABINET-SERVICE POST VSB A2-254-25-054 used on 001S SEE 25-41-51-19F FOR DET	NP		001
160A	D2549010512679		. . TABLE-NURSING used on 001A, 001C, 001D, 001J, 001K, 001L, 001N, 001P, 001Q, 001R SEE 25-41-51-20A FOR DET	NP		001
-160B	D2549020613679		. . TABLE-NURSING used on 001B SEE 25-41-51-20A FOR DET	NP		001
-160C	D2549020612279		. . TABLE-NURSING used on 001E SEE 25-41-51-20A FOR DET	NP		001
-160D	D2549030508679		. . TABLE-NURSING used on 001F, 001S SEE 25-41-51-20A FOR DET	NP		001
-160E	D2549010510679		. . TABLE-NURSING used on 001G, 001M SEE 25-41-51-20A FOR DET	NP		001
-160F	D2549020702679		. . TABLE-NURSING used on 001H SEE 25-41-51-20A FOR DET	NP		001

- ITEM NOT ILLUSTRATED

FIG. ITEM	PART NUMBER	AIRLINE STOCK NUMBER	NOMENCLATURE 1234567		EFF CODE	UNITS PER ASSY
170A	D2549010514280		. . VENTILATION SYSTEM used on 001A, 001C, 001D, 001G, 001J, 001K, 001L, 001M, 001P, 001Q, 001R SEE 25-41-51-21A FOR DET	NP		001
-170B	D2549020507080		. . VENTILATION SYSTEM used on 001B SEE 25-41-51-21A FOR DET	NP		001
-170C	D2549020612280		. . VENTILATION SYSTEM used on 001E SEE 25-41-51-21A FOR DET	NP		001
-170D	D2549030508680		. . VENTILATION SYSTEM used on 001F, 001S SEE 25-41-51-21A FOR DET	NP		001
-170E	D2549010514080		. . VENTILATION SYSTEM used on 001H SEE 25-41-51-21A FOR DET	NP		001
-170F	D2549020802680		. . VENTILATION SYSTEM used on 001N SEE 25-41-51-21B FOR DET	NP		001
180A	D2549030504081		. . WATER SYSTEM-POTABLE used on 001A, 001N, 001R SEE 25-41-51-22G FOR DET	NP		001
-180B	D2549020506281		. . WATER SYSTEM-POTABLE used on 001B SEE 25-41-51-22E FOR DET	NP		001
-180C	D2549030504881		. . WATER SYSTEM-POTABLE used on 001C, 001D, 001E, 001F, 001G, 001H, 001J, 001K, 001L, 001M, 001P, 001Q, 001S SEE 25-41-51-22D FOR DET	NP		001

- ITEM NOT ILLUSTRATED

FIG. ITEM	PART NUMBER	AIRLINE STOCK NUMBER	NOMENCLATURE 1234567	EFF CODE	UNITS PER ASSY
190A	D2549030504082		. . WATER SYSTEM-WASTE NP used on 001A, 001N, 001R SEE 25-41-51-23B FOR DET		001
-190B	D2549020506282		. . WATER SYSTEM-WASTE NP used on 001B SEE 25-41-51-23B FOR DET		001
-190C	D2549010511082		. . WATER SYSTEM-WASTE NP used on 001C, 001D, 001F, 001G, 001H, 001K, 001L, 001M, 001P, 001S SEE 25-41-51-23B FOR DET		001
-190D	D2549030504882		. . WATER SYSTEM-WASTE NP used on 001E, 001J, 001Q SEE 25-41-51-23B FOR DET		001
200A	D2549030508083		. . ELECTRICAL SYSTEM NP used on 001C, 001D, 001F, 001H, 001J, 001K, 001L, 001Q, 001S SEE 25-41-51-26C FOR DET		001
-200B	D2549030509483		. . ELECTRICAL SYSTEM NP used on 001B SEE 25-41-51-26C FOR DET		001
-200C	D2549010509483		. . ELECTRICAL SYSTEM NP used on 001E SEE 25-41-51-26C FOR DET		001
-200D	D2549030512283		. . ELECTRICAL SYSTEM NP used on 001G SEE 25-41-51-26C FOR DET		001
-200E	D2549030604683		. . ELECTRICAL SYSTEM NP used on 001M SEE 25-41-51-26E FOR DET		001

- ITEM NOT ILLUSTRATED

FIG. ITEM	PART NUMBER	AIRLINE STOCK NUMBER	NOMENCLATURE 1234567	EFF CODE	UNITS PER ASSY
-200F	D2549010603883		. . ELECTRICAL SYSTEM NP used on 001A, 001N SEE 25-41-51-26E FOR DET		001
-200G	D2549010401683		. . ELECTRICAL SYSTEM NP POST SB 26-1058 used on 001P SEE 25-41-51-26C FOR DET		001
-200H	D2549030514783		. . ELECTRICAL SYSTEM NP used on 001R SEE 25-41-51-26E FOR DET		001

- ITEM NOT ILLUSTRATED

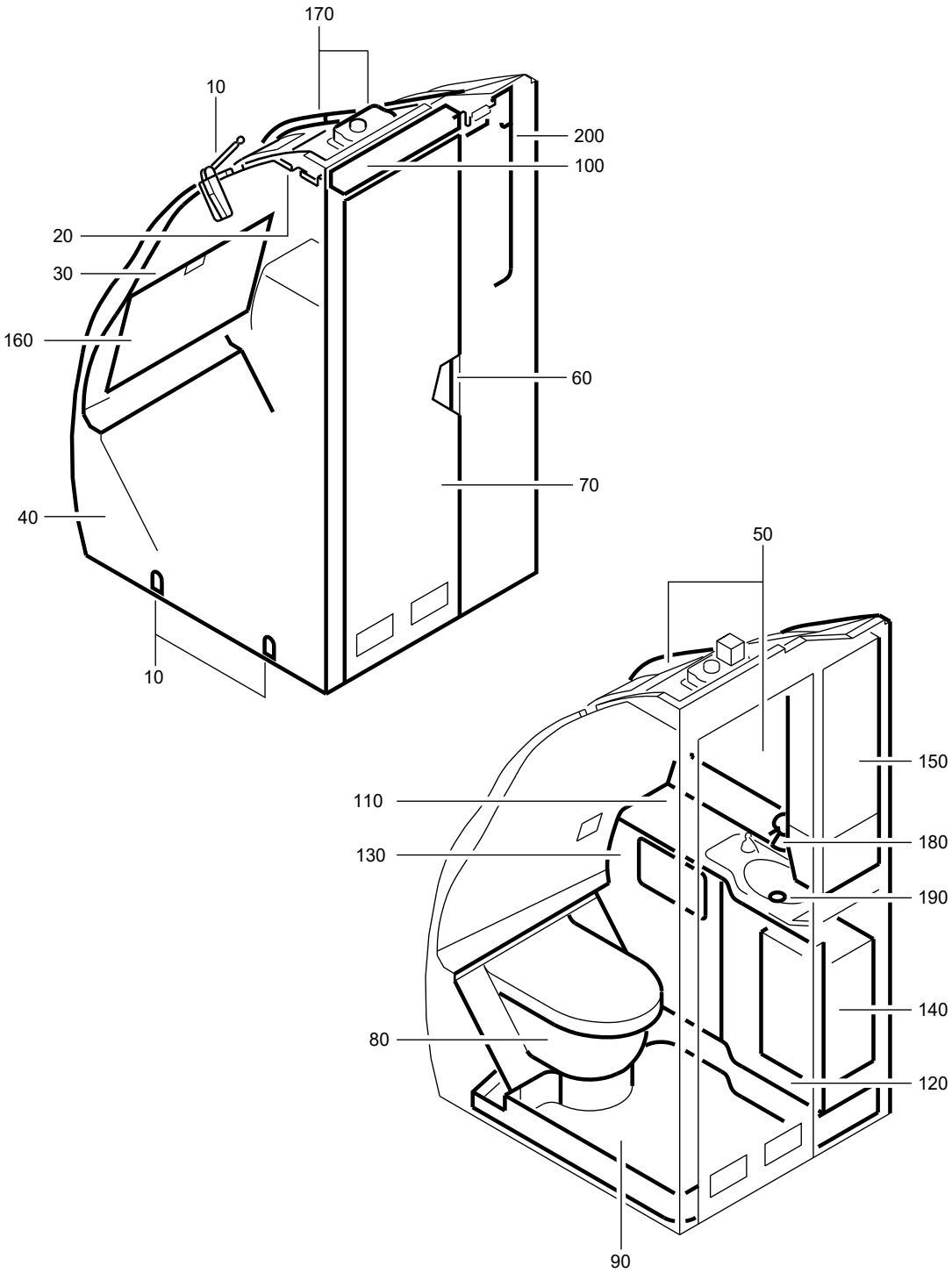

F_PL_254151_01_Z_01_00

LAVATORY A ASSY
Figure 01Z/EN254151SHEET01Z01

FIG. ITEM	PART NUMBER	AIRLINE STOCK NUMBER	NOMENCLATURE 1234567	EFF CODE	UNITS PER ASSY
01Z					
-001A	D2549010603000		. LAVATORY A ASSY SEE SIL 25-117 FOR DET		RF
-001B	D2549010603400		. LAVATORY A ASSY SEE SIL 25-117 FOR DET		RF
-001C	D2549020706000		. LAVATORY A ASSY SEE SIL 25-117 FOR DET		RF
-001D	D2549030600600		. LAVATORY A ASSY SEE SIL 25-117 FOR DET		RF
-001E	D2549030601200		. LAVATORY A ASSY SEE SIL 25-117 FOR DET		RF
-001F	D2549030600400		. LAVATORY A ASSY SEE SIL 25-117 FOR DET		RF
-001G	D2549030601400		. LAVATORY A ASSY SEE SIL 25-117 FOR DET		RF
-001H	D2549020707600		. LAVATORY A ASSY PRE VSB A2-254-25-057 SEE SIL 25-117 FOR DET		RF
-001J	D2549020705000		. LAVATORY A ASSY PRE VSB A2-254-25-054 SEE SIL 25-117 FOR DET		RF
-001K	D2549030510400		. LAVATORY A ASSY SEE SIL 25-117 FOR DET		RF
-001L	D2549020704800		. LAVATORY A ASSY SEE SIL 25-117 FOR DET		RF
-001M	D2549030602000		. LAVATORY A ASSY PRE VSB A2-254-25-080 SEE SIL 25-117 FOR DET		RF

- ITEM NOT ILLUSTRATED

FIG. ITEM	PART NUMBER	AIRLINE STOCK NUMBER	NOMENCLATURE 1234567	EFF CODE	UNITS PER ASSY
-001N	D2549030600400		. LAVATORY A ASSY SEE SIL 25-117 FOR DET		RF
-001P	R225401195-000		. LAVATORY A ASSY POST VSB A2-254-25-054 SEE SIL 25-117 FOR DET		RF
-001Q	R225401172-008		. LAVATORY A ASSY POST VSB A2-254-25-080 SEE SIL 25-117 FOR DET		RF
-001R	R225401160-000		. LAVATORY A ASSY POST VSB A2-254-25-057		RF
010A	D2549030514661		. . ATTACHMENT-LAVATORY NP used on 001A, 001B, 001C, 001J, 001P SEE 25-41-51-02A FOR DET		001
-010B	D2549020700461		. . ATTACHMENT-LAVATORY NP used on 001D, 001K, 001L SEE 25-41-51-02A FOR DET		001
-010C	D2549030513261		. . ATTACHMENT-LAVATORY NP used on 001F, 001N SEE 25-41-51-02A FOR DET		001
-010D	D2549030510061		. . ATTACHMENT-LAVATORY NP used on 001G, 001H, 001R SEE 25-41-51-02A FOR DET		001
-010E	D2549030514861		. . ATTACHMENT-LAVATORY NP used on 001M, 001Q SEE 25-41-51-02A FOR DET		001
-010F	D2549020705861		. . ATTACHMENT-LAVATORY NP used on 001E SEE 25-41-51-02D FOR DET		001

- ITEM NOT ILLUSTRATED

FIG. ITEM	PART NUMBER	AIRLINE STOCK NUMBER	NOMENCLATURE 1234567		EFF CODE	UNITS PER ASSY
020A	D2549020602663		. . PANEL-CEILING used on 001A, 001B, 001C, 001D, 001E, 001J, 001K, 001L, 001M, 001P, 001Q SEE 25-41-51-040 FOR DET	NP		001
-020B	D2549010513863		. . PANEL-CEILING used on 001F, 001N SEE 25-41-51-040 FOR DET	NP		001
-020C	D2549030506063		. . PANEL-CEILING used on 001G, 001H, 001R SEE 25-41-51-040 FOR DET	NP		001
030A	D2549010512664		. . WALL-REAR used on 001A, 001B, 001C, 001D, 001E, 001J, 001K, 001L, 001M, 001P, 001Q SEE 25-41-51-05B FOR DET	NP		001
-030B	D2549010600264		. . WALL-REAR used on 001F, 001N SEE 25-41-51-05D FOR DET	NP		001
-030C	D2549030601464		. . WALL-REAR used on 001G, 001H, 001R SEE 25-41-51-05C FOR DET	NP		001
040A	D2549020700465		. . WALL-SIDE used on 001A, 001B SEE 25-41-51-06N FOR DET	NP		001
-040B	D2549030514265		. . WALL-SIDE used on 001D SEE 25-41-51-06P FOR DET	NP		001
-040C	D2549020614465		. . WALL-SIDE used on 001E SEE 25-41-51-06L FOR DET	NP		001

- ITEM NOT ILLUSTRATED

FIG. ITEM	PART NUMBER	AIRLINE STOCK NUMBER	NOMENCLATURE 1234567		EFF CODE	UNITS PER ASSY
-040D	D2549030511865		. . WALL-SIDE used on 001F, 001N SEE 25-41-51-06M FOR DET	NP		001
-040E	D2549030601465		. . WALL-SIDE used on 001G, 001H, 001R SEE 25-41-51-06Q FOR DET	NP		001
-040F	D2549020705065		. . WALL-SIDE PRE VSB A2-254-25-054 used on 001J SEE 25-41-51-06Q FOR DET	NP		001
-040G	D2549030510465		. . WALL-SIDE used on 001K, 001L SEE 25-41-51-06Q FOR DET	NP		001
-040H	D2549030509865		. . WALL-SIDE PRE VSB A2-254-25-080 used on 001M SEE 25-41-51-06N FOR DET	NP		001
-040J	D2549020700465		. . WALL-SIDE used on 001C SEE 25-41-51-06L FOR DET	NP		001
-040K	R22540119500065		. . WALL-SIDE POST VSB A2-254-25-054 used on 001P SEE 25-41-51-06Q FOR DET	NP		001
-040L	R22540117200665		. . WALL-SIDE POST VSB A2-254-25-080 used on 001Q SEE 25-41-51-06N FOR DET	NP		001
050A	D2549020607066		. . HOUSING used on 001A, 001B SEE 25-41-51-07Y FOR DET	NP		001

- ITEM NOT ILLUSTRATED

FIG. ITEM	PART NUMBER	AIRLINE STOCK NUMBER	NOMENCLATURE 1234567	EFF CODE	UNITS PER ASSY
-050B	D2549020604266		. . HOUSING NP used on 001D SEE 25-41-51-07D FOR DET		001
-050C	D2549030505866		. . HOUSING NP used on 001E SEE 25-41-51-07D FOR DET		001
-050D	D2549010513866		. . HOUSING NP used on 001F, 001N SEE 25-41-51-07E FOR DET		001
-050E	D2549030506066		. . HOUSING NP used on 001G, 001H, 001R SEE 25-41-51-07C FOR DET		001
-050F	D2549030511666		. . HOUSING NP used on 001J, 001P SEE 25-41-51-07G FOR DET		001
-050G	D2549030504866		. . HOUSING NP used on 001K, 001L SEE 25-41-51-07B FOR DET		001
-050H	D2549010606066		. . HOUSING NP used on 001M, 001Q SEE 25-41-51-07G FOR DET		001
-050J	D2549020700466		. . HOUSING NP used on 001C SEE 25-41-51-07Y FOR DET		001
060A	D2549010500069		. . DOOR INSTL NP used on 001A, 001B, 001D, 001E, 001F, 001J, 001K, 001L, 001M, 001N, 001P, 001Q SEE 25-41-51-100 FOR DET		001

- ITEM NOT ILLUSTRATED

FIG. ITEM	PART NUMBER	AIRLINE STOCK NUMBER	NOMENCLATURE 1234567	EFF CODE	UNITS PER ASSY
-060B	D2549020401269		. . DOOR INSTL NP POST SB 25-1314 used on 001C, 001G, 001H, 001R SEE 25-41-51-10A FOR DET		001
070A	A225400276-942		. . DOOR ASSY-SINGLE used on 001A, 001B SEE 25-41-51-11F FOR DET		001
-070B	A225400276-936		. . DOOR ASSY-SINGLE used on 001D SEE 25-41-51-11G FOR DET		001
-070C	A225400276-588		. . DOOR ASSY-SINGLE used on 001E SEE 25-41-51-11F FOR DET		001
-070D	A225400276-574		. . DOOR ASSY-SINGLE used on 001F, 001N SEE 25-41-51-11E FOR DET		001
-070E	A2254002768930		. . DOOR ASSY-SINGLE POST SB 25-1314 used on 001G, 001H, 001R SEE 25-41-51-11N FOR DET		001
-070F	A225400276-928		. . DOOR ASSY-SINGLE used on 001J, 001P SEE 25-41-51-11F FOR DET		001
-070G	A225400276-568		. . DOOR ASSY-SINGLE used on 001K, 001L SEE 25-41-51-11G FOR DET		001
-070H	A225400276-934		. . DOOR ASSY-SINGLE used on 001M, 001Q SEE 25-41-51-11F FOR DET		001
-070J	A2254002768942		. . DOOR ASSY-SINGLE used on 001A, 001B, 001C SEE 25-41-51-11N FOR DET		001

- ITEM NOT ILLUSTRATED

FIG. ITEM	PART NUMBER	AIRLINE STOCK NUMBER	NOMENCLATURE 1234567		EFF CODE	UNITS PER ASSY
080A	D2549020607671		. . TOILET UNIT AND TOILET SHROUD used on 001A, 001B, 001C SEE 25-41-51-12C FOR DET	NP		001
-080B	D2549030506271		. . TOILET UNIT AND TOILET SHROUD used on 001D SEE 25-41-51-12C FOR DET	NP		001
-080C	D2549020604271		. . TOILET UNIT AND TOILET SHROUD used on 001E, 001F, 001K, 001L, 001M, 001N, 001Q SEE 25-41-51-12C FOR DET	NP		001
-080D	D2549030506071		. . TOILET UNIT AND TOILET SHROUD used on 001G, 001H, 001R SEE 25-41-51-12C FOR DET	NP		001
-080E	D2549030511671		. . TOILET UNIT AND TOILET SHROUD used on 001J, 001P SEE 25-41-51-12D FOR DET	NP		001
090A	D2549020604872		. . PAN-FLOOR used on 001A SEE 25-41-51-13C FOR DET	NP		001
-090B	D2549010603472		. . PAN-FLOOR used on 001B SEE 25-41-51-13D FOR DET	NP		001
-090C	D2549030505272		. . PAN-FLOOR used on 001D SEE 25-41-51-13A FOR DET	NP		001
-090D	D2549030514072		. . PAN-FLOOR used on 001E SEE 25-41-51-13D FOR DET	NP		001

- ITEM NOT ILLUSTRATED

FIG. ITEM	PART NUMBER	AIRLINE STOCK NUMBER	NOMENCLATURE 1234567		EFF CODE	UNITS PER ASSY
-090E	D2549010513872		. . PAN-FLOOR used on 001F, 001N SEE 25-41-51-13C FOR DET	NP		001
-090F	D2549030411672		. . PAN-FLOOR used on 001G, 001H, 001R SEE 25-41-51-13R FOR DET	NP		001
-090G	D2549020705072		. . PAN-FLOOR used on 001J, 001P SEE 25-41-51-13D FOR DET	NP		001
-090H	D2549030506272		. . PAN-FLOOR used on 001K, 001L SEE 25-41-51-13B FOR DET	NP		001
-090J	D2549030507072		. . PAN-FLOOR used on 001M, 001Q SEE 25-41-51-13C FOR DET	NP		001
-090K	D2549020700472		. . PAN-FLOOR used on 001C SEE 25-41-51-13V FOR DET	NP		001
100A	D2549010512673		. . LIGHT-DOOR used on 001A, 001B, 001C, 001D, 001E, 001J, 001K, 001L, 001M, 001P, 001Q SEE 25-41-51-140 FOR DET	NP		001
-100B	D2549010600273		. . LIGHT-DOOR used on 001F, 001N SEE 25-41-51-14A FOR DET	NP		001
-100C	D2549030508473		. . LIGHT-DOOR used on 001G, 001H, 001R SEE 25-41-51-140 FOR DET	NP		001

- ITEM NOT ILLUSTRATED

FIG. ITEM	PART NUMBER	AIRLINE STOCK NUMBER	NOMENCLATURE 1234567	EFF CODE	UNITS PER ASSY
110A	D2549030514674		. . WASHBASIN UNIT NP used on 001A, 001B, 001C, 001F, 001N SEE 25-41-51-15G FOR DET		001
-110B	D2549030600674		. . WASHBASIN UNIT NP used on 001D SEE 25-41-51-15H FOR DET		001
-110C	D2549020614474		. . WASHBASIN UNIT NP used on 001E SEE 25-41-51-15F FOR DET		001
-110D	D2549020704674		. . WASHBASIN UNIT NP used on 001G, 001H, 001K, 001L, 001R SEE 25-41-51-15G FOR DET		001
-110E	D2549020700674		. . WASHBASIN UNIT NP used on 001J, 001P SEE 25-41-51-15G FOR DET		001
-110F	D2549030509874		. . WASHBASIN UNIT NP used on 001M, 001Q SEE 25-41-51-15G FOR DET		001
120A	D2549020607675		. . DOOR ASSY-WASHBASIN UNIT NP used on 001A, 001B, 001C SEE 25-41-51-16C FOR DET		001
-120B	D2549030506275		. . DOOR ASSY-WASHBASIN UNIT NP used on 001D SEE 25-41-51-16C FOR DET		001
-120C	D2549020607075		. . DOOR ASSY-WASHBASIN UNIT NP used on 001E, 001F, 001J, 001K, 001L, 001M, 001N, 001P, 001Q SEE 25-41-51-16B FOR DET		001

- ITEM NOT ILLUSTRATED

FIG. ITEM	PART NUMBER	AIRLINE STOCK NUMBER	NOMENCLATURE 1234567		EFF CODE	UNITS PER ASSY
-120D	D2549030506075		. . DOOR ASSY-WASHBASIN UNIT used on 001G, 001H, 001R SEE 25-41-51-16B FOR DET	NP		001
130A	D2549020607676		. . PANEL ASSY-WASHBASIN UNIT used on 001A, 001B, 001C SEE 25-41-51-17C FOR DET	NP		001
-130B	D2549030506276		. . PANEL ASSY-WASHBASIN UNIT used on 001D SEE 25-41-51-17C FOR DET	NP		001
-130C	D2549030504876		. . PANEL ASSY-WASHBASIN UNIT used on 001E, 001F, 001J, 001K, 001L, 001M, 001N, 001P, 001Q SEE 25-41-51-17C FOR DET	NP		001
-130D	D2549030506076		. . PANEL ASSY-WASHBASIN UNIT used on 001G, 001H, 001R SEE 25-41-51-17C FOR DET	NP		001
140A	D2549030504877		. . BIN-WASTE,CHUTE-WASTE AND EXTINGUISHER-FIRE used on 001A, 001B, 001C, 001D, 001E, 001F, 001G, 001H, 001J, 001K, 001L, 001M, 001N, 001P, 001Q, 001R SEE 25-41-51-180 FOR DET	NP		001
150A	D2549030504878		. . CABINET-SERVICE PRE VSB A2-254-25-054 PRE VSB A2-254-25-080 used on 001A, 001B, 001C, 001D, 001J, 001K, 001L, 001M SEE 25-41-51-19E FOR DET	NP		001

- ITEM NOT ILLUSTRATED

FIG. ITEM	PART NUMBER	AIRLINE STOCK NUMBER	NOMENCLATURE 1234567		EFF CODE	UNITS PER ASSY
-150B	D2549030505878		. . CABINET-SERVICE used on 001E SEE 25-41-51-19E FOR DET	NP		001
-150C	D2549010513878		. . CABINET-SERVICE used on 001F, 001N SEE 25-41-51-19F FOR DET	NP		001
-150D	D2549030506078		. . CABINET-SERVICE used on 001G, 001H, 001R SEE 25-41-51-19E FOR DET	NP		001
-150E	R22540119500078		. . CABINET-SERVICE POST VSB A2-254-25-054 used on 001P SEE 25-41-51-19E FOR DET	NP		001
-150F	R22540114500278		. . CABINET-SERVICE POST VSB A2-254-25-080 used on 001Q SEE 25-41-51-19E FOR DET	NP		001
160A	D2549010510679		. . TABLE-NURSING used on 001A, 001B, 001C, 001D, 001J, 001K, 001L, 001M, 001P , 001Q SEE 25-41-51-20A FOR DET	NP		001
-160B	D2549010512679		. . TABLE-NURSING used on 001E SEE 25-41-51-20A FOR DET	NP		001
-160C	D2549010600279		. . TABLE-NURSING used on 001F, 001N SEE 25-41-51-20A FOR DET	NP		001
-160D	D2549030508479		. . TABLE-NURSING used on 001G, 001H, 001R SEE 25-41-51-20A FOR DET	NP		001

- ITEM NOT ILLUSTRATED

FIG. ITEM	PART NUMBER	AIRLINE STOCK NUMBER	NOMENCLATURE 1234567		EFF CODE	UNITS PER ASSY
170A	D2549010514280		. . VENTILATION SYSTEM used on 001A, 001B, 001C, 001D, 001E, 001J, 001K, 001L, 001M, 001P, 001Q SEE 25-41-51-21A FOR DET	NP		001
-170B	D2549030507680		. . VENTILATION SYSTEM used on 001F, 001N SEE 25-41-51-21A FOR DET	NP		001
-170C	D2549030508480		. . VENTILATION SYSTEM used on 001G, 001H, 001R SEE 25-41-51-21A FOR DET	NP		001
180A	D2549030504881		. . WATER SYSTEM-POTABLE used on 001A, 001B, 001C, 001D, 001E, 001F, 001J, 001K, 001L, 001M, 001N, 001P, 001Q SEE 25-41-51-22D FOR DET	NP		001
-180B	D2549030504081		. . WATER SYSTEM-POTABLE used on 001G, 001H, 001R SEE 25-41-51-22G FOR DET	NP		001
190A	D2549010511082		. . WATER SYSTEM-WASTE used on 001A, 001B, 001C, 001F, 001J, 001M, 001N, 001P, 001Q SEE 25-41-51-23B FOR DET	NP		001
-190B	D2549030504882		. . WATER SYSTEM-WASTE used on 001D, 001E, 001K, 001L SEE 25-41-51-23B FOR DET	NP		001
-190C	D2549030506082		. . WATER SYSTEM-WASTE used on 001G SEE 25-41-51-23B FOR DET	NP		001
-190D	D2549020605682		. . WATER SYSTEM-WASTE used on 001H, 001R SEE 25-41-51-23B FOR DET	NP		001

- ITEM NOT ILLUSTRATED

FIG. ITEM	PART NUMBER	AIRLINE STOCK NUMBER	NOMENCLATURE 1234567		EFF CODE	UNITS PER ASSY
200A	D2549030508083		. . ELECTRICAL SYSTEM used on 001C, 001G SEE 25-41-51-26C FOR DET	NP		001
-200B	D2549030604683		. . ELECTRICAL SYSTEM used on 001J, 001P SEE 25-41-51-26E FOR DET	NP		001
-200C	D2549010603883		. . ELECTRICAL SYSTEM used on 001A, 001B, 001D, 001E, 001F, 001H, 001K, 001L, 001R SEE 25-41-51-26E FOR DET	NP		001
-200D	D2549030602083		. . ELECTRICAL SYSTEM used on 001M, 001Q SEE 25-41-51-26F FOR DET	NP		001
-200E	D2549030604883		. . ELECTRICAL SYSTEM used on 001N SEE 25-41-51-26E FOR DET	NP		001

- ITEM NOT ILLUSTRATED

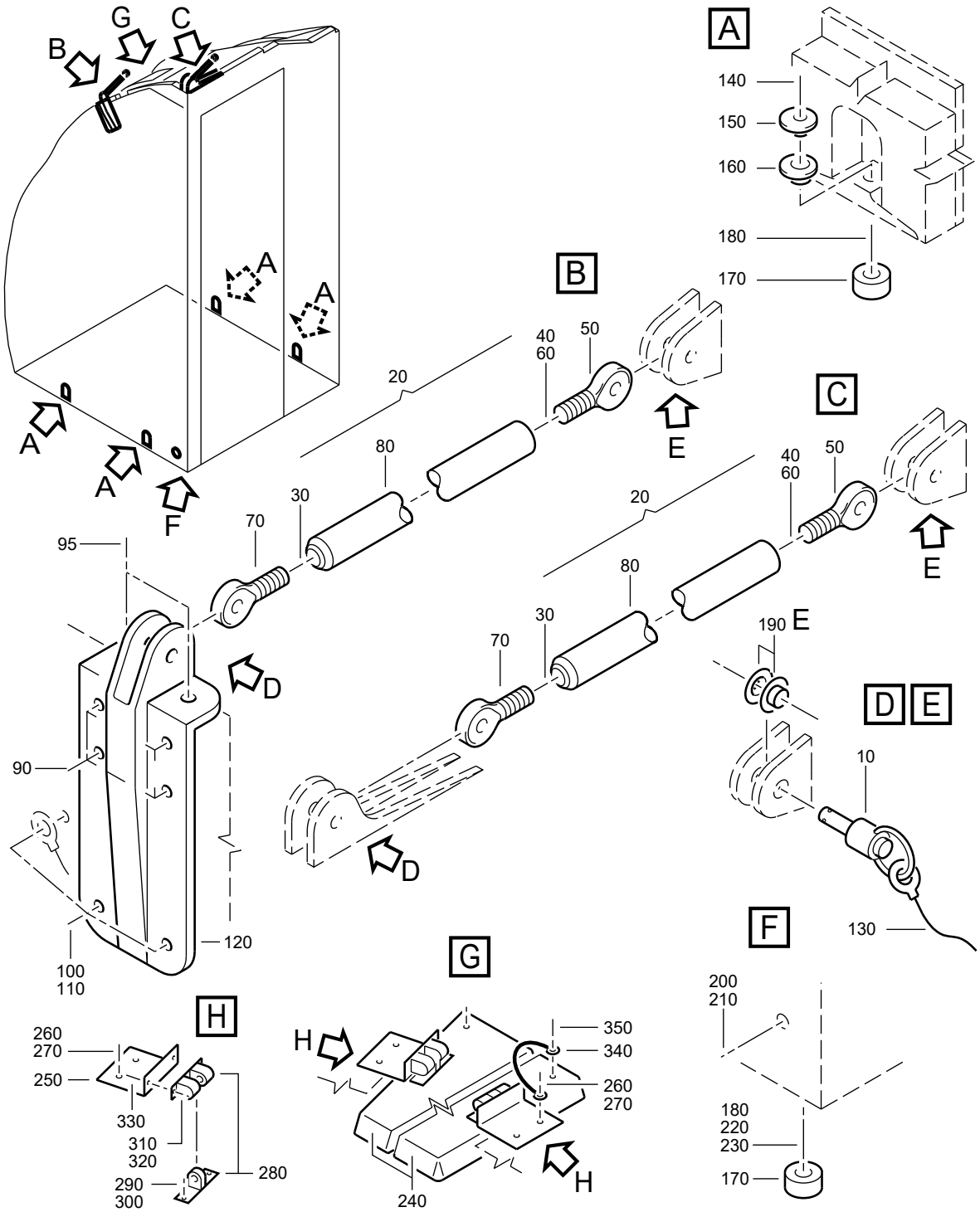

F_PL_254151_02_0_01_01

ATTACHMENT-LAVATORY
Figure 2/EN254151SHEET02001

FIG. ITEM	PART NUMBER	AIRLINE STOCK NUMBER	NOMENCLATURE 1234567		EFF CODE	UNITS PER ASSY
02						
-001A	D2549010500061		. ATTACHMENT-LAVATORY used on 010A (254151010), 010A (25415101A), 010A(25415101B), 010A (25415101C), 010A (25415101D), 010A(25415101E), 010A (25415101F), 010A (25415101G), 010B(25415101H), 010D (25415101K), 010D (25415101M), 010E(25415101N), 010D (25415141T) SEE 25-41-51-010 FOR NHA SEE 25-41-51-01A FOR NHA SEE 25-41-51-01B FOR NHA SEE 25-41-51-01C FOR NHA SEE 25-41-51-01D FOR NHA SEE 25-41-51-01E FOR NHA SEE 25-41-51-01F FOR NHA SEE 25-41-51-01G FOR NHA SEE 25-41-51-01H FOR NHA SEE 25-41-51-01K FOR NHA SEE 25-41-51-01M FOR NHA SEE 25-41-51-01N FOR NHA SEE 25-41-51-41T FOR NHA	NP		RF
-001B	D2549020500661		. ATTACHMENT-LAVATORY used on 010B (254151010), 010B (25415101A), 010B(25415101B), 010B (25415101D), 010B (25415101E), 010B(25415101F) SEE 25-41-51-010 FOR NHA SEE 25-41-51-01A FOR NHA SEE 25-41-51-01B FOR NHA SEE 25-41-51-01D FOR NHA SEE 25-41-51-01E FOR NHA SEE 25-41-51-01F FOR NHA	NP		RF
-001C	D2549020600461		. ATTACHMENT-LAVATORY used on 010E (254151410) SEE 25-41-51-410 FOR NHA	NP		RF

- ITEM NOT ILLUSTRATED

FIG. ITEM	PART NUMBER	AIRLINE STOCK NUMBER	NOMENCLATURE 1234567	EFF CODE	UNITS PER ASSY
-001D	D2549020602661		. ATTACHMENT-LAVATORY NP used on 010B (25415101G), 010A (25415101H), 010A (25415101J), 010B (25415101K), 010A (25415101L), 010A (25415101M), 010A (25415101N), 010B (25415101P), 010C(25415101Q), 010A (25415101R), 010B (25415101S), 010A(25415101T), 010A (25415101U), 010C (25415101W), 010B(25415141B) SEE 25-41-51-01G FOR NHA SEE 25-41-51-01H FOR NHA SEE 25-41-51-01J FOR NHA SEE 25-41-51-01K FOR NHA SEE 25-41-51-01L FOR NHA SEE 25-41-51-01M FOR NHA SEE 25-41-51-01N FOR NHA SEE 25-41-51-01P FOR NHA SEE 25-41-51-01Q FOR NHA SEE 25-41-51-01R FOR NHA SEE 25-41-51-01S FOR NHA SEE 25-41-51-01T FOR NHA SEE 25-41-51-01U FOR NHA SEE 25-41-51-01W FOR NHA SEE 25-41-51-41B FOR NHA		RF

- ITEM NOT ILLUSTRATED

FIG. ITEM	PART NUMBER	AIRLINE STOCK NUMBER	NOMENCLATURE 1234567		EFF CODE	UNITS PER ASSY
-001E	D2549020602861		. ATTACHMENT-LAVATORY used on 010C (25415101G), 010B (25415101J), 010C (25415101K), 010B (25415101M), 010A (25415101P), 010B(25415101Q), 010B (25415101T), 010D (25415101W) SEE 25-41-51-01G FOR NHA SEE 25-41-51-01J FOR NHA SEE 25-41-51-01K FOR NHA SEE 25-41-51-01M FOR NHA SEE 25-41-51-01P FOR NHA SEE 25-41-51-01Q FOR NHA SEE 25-41-51-01T FOR NHA SEE 25-41-51-01W FOR NHA	NP		RF
-001F	D2549030505661		. ATTACHMENT-LAVATORY used on 010A (25415101K), 010C (25415101P) SEE 25-41-51-01K FOR NHA SEE 25-41-51-01P FOR NHA	NP		RF
-001G	D2549030506061		. ATTACHMENT-LAVATORY used on 010A (25415101Q), 010D (25415101S), 010G (25415101V), 010C (25415141B) SEE 25-41-51-01Q FOR NHA SEE 25-41-51-01S FOR NHA SEE 25-41-51-01V FOR NHA SEE 25-41-51-41B FOR NHA	NP		RF
-001H	D2549020610261		. ATTACHMENT-LAVATORY used on 010B (25415101N), 010A (25415101S) SEE 25-41-51-01N FOR NHA SEE 25-41-51-01S FOR NHA	NP		RF

- ITEM NOT ILLUSTRATED

FIG. ITEM	PART NUMBER	AIRLINE STOCK NUMBER	NOMENCLATURE 1234567		EFF CODE	UNITS PER ASSY
-001J	D2549010513861		. ATTACHMENT-LAVATORY used on 010D (25415101Q), 010B (25415101U), 010A (25415141B) SEE 25-41-51-01Q FOR NHA SEE 25-41-51-01U FOR NHA SEE 25-41-51-41B FOR NHA	NP		RF
-001K	D2549030507261		. ATTACHMENT-LAVATORY used on 010C (25415101N), 010E (25415101Q), 010B (25415101X) SEE 25-41-51-01N FOR NHA SEE 25-41-51-01Q FOR NHA SEE 25-41-51-01X FOR NHA	NP		RF
-001L	D2549020510861		. ATTACHMENT-LAVATORY used on 010D (25415141R) SEE 25-41-51-41R FOR NHA	NP		RF
-001M	D2549010500061		. ATTACHMENT-LAVATORY used on 010D (25415101A), 010D (25415101B), 010D (25415101C), 010E (25415101H) SEE 25-41-51-01A FOR NHA SEE 25-41-51-01B FOR NHA SEE 25-41-51-01C FOR NHA SEE 25-41-51-01H FOR NHA	NP		RF
-001N	D2549020602661		. ATTACHMENT-LAVATORY used on 010E (25415101J), 010E (25415101M) SEE 25-41-51-01J FOR NHA SEE 25-41-51-01M FOR NHA	NP		RF
-001P	D2549020500661		. ATTACHMENT-LAVATORY used on 010E (25415101A) SEE 25-41-51-01A FOR NHA	NP		RF

- ITEM NOT ILLUSTRATED

FIG. ITEM	PART NUMBER	AIRLINE STOCK NUMBER	NOMENCLATURE 1234567	EFF CODE	UNITS PER ASSY
-001Q	D2549020602861		. ATTACHMENT-LAVATORY NP used on 010D (25415101J) SEE 25-41-51-01J FOR NHA		RF
-001R	D2549010508461		. ATTACHMENT-LAVATORY NP POST SB 25-1289 used on 010F (25415101G) SEE 25-41-51-01G FOR NHA		RF
-001S	D2549010508061		. ATTACHMENT-LAVATORY NP POST SB 25-1289 used on 010E (25415101G) SEE 25-41-51-01G FOR NHA		RF
010A	MS17987C409		. . PIN-QUICK RELEASE used on 001A, 001B, 001C, 001D, 001E, 001F, 001G, 001H, 001J, 001K, 001L, 001M, 001N, 001P, 001Q, 001R, 001S		004
020A	A225400238-000		. . STRUT ASSY used on 001A, 001B, 001C, 001D, 001E, 001F, 001G, 001H, 001J, 001K, 001L, 001M, 001N, 001P, 001Q, 001R, 001S		002
030A	NAS509L5		. . . NUT used on 020A		001
040A	NAS513-5		. . . WASHER used on 020A		001
050A	NSA8140-04RK		. . . ROD END used on 020A		001
060A	NAS509-5		. . . NUT used on 020A		001
070A	NSA8140-04LK		. . . ROD END used on 020A		001

- ITEM NOT ILLUSTRATED

FIG. ITEM	PART NUMBER	AIRLINE STOCK NUMBER	NOMENCLATURE 1234567	EFF CODE	UNITS PER ASSY
080A	A225400238-200		. . . STRUT used on 020A		001
090A	NAS1304-2		. . BOLT BUY PN NAS6604-2 used on 001A, 001B, 001C, 001D, 001E, 001F, 001G, 001H, 001J, 001K, 001L, 001M, 001N, 001P, 001Q, 001R, 001S		004
095A	NAS1304-2		. . BOLT POST SB 25-1289 BUY PN NAS6604-2 used on 001L, 001M, 001N, 001P, 001Q, 001R, 001S		002
100A	NAS1096-3-7		. . SCREW BUY PN NAS1801-3-7 used on 001A, 001B, 001C, 001D, 001E, 001F, 001G, 001H, 001J, 001K		003
110A	AN960C10L		. . WASHER BUY PN NAS1149C0332R used on 001A, 001B, 001C		003
-110B	NAS1149C0332R		. . WASHER used on 001D, 001E, 001F, 001G, 001H, 001J, 001K		003
120A	A225401239-200		. . FITTING used on 001A, 001B, 001C, 001D, 001E, 001F, 001G, 001H, 001J, 001K		001
-120B	A225401239-204		. . FITTING POST SB 25-1289 used on 001L, 001M, 001N, 001P, 001Q, 001R, 001S		001

- ITEM NOT ILLUSTRATED

FIG. ITEM	PART NUMBER	AIRLINE STOCK NUMBER	NOMENCLATURE 1234567	EFF CODE	UNITS PER ASSY
130A	DAN80A2-200		. . LANYARD used on 001A, 001B, 001C, 001D, 001E, 001F, 001G, 001H, 001J, 001K, 001L, 001M, 001N, 001P, 001Q, 001R, 001S		004
140A	NAS1304-31		. . BOLT BUY PN NAS6604-31 used on 001A, 001B, 001C, 001D, 001E, 001F, 001G, 001H, 001J, 001K, 001L, 001M, 001N, 001P, 001Q, 001R, 001S		004
150A	A225400207-204		. . BUSHING used on 001A, 001B, 001C, 001D, 001E, 001F, 001G, 001H, 001J, 001K, 001L, 001M, 001N, 001P, 001Q, 001R, 001S		004
160A	A225400207-206		. . BUSHING used on 001A, 001B, 001C, 001D, 001E, 001F, 001G, 001H, 001J, 001K, 001L, 001M, 001N, 001P, 001Q, 001R, 001S		004
170A	A225400207-200		. . BUSHING used on 001A, 001B, 001C, 001D, 001E, 001F, 001G, 001H, 001J, 001K, 001L, 001M, 001N, 001P, 001Q, 001R, 001S		005
180A	NAS1611-209		. . PACKING BUY PN EN6075-209 used on 001A, 001B, 001C, 001D, 001E, 001F, 001G, 001H, 001J, 001K, 001L, 001M, 001N, 001P, 001Q, 001R, 001S		005

- ITEM NOT ILLUSTRATED

FIG. ITEM	PART NUMBER	AIRLINE STOCK NUMBER	NOMENCLATURE 1234567	EFF CODE	UNITS PER ASSY
190A	A225400207-202		. . BUSHING used on 001A, 001B, 001C, 001D, 001E, 001F, 001G, 001H, 001J, 001K, 001L, 001M, 001N, 001P, 001Q, 001R, 001S		004
200A	NAS577B4A		. . NUT used on 001A, 001B, 001C, 001D, 001E, 001F, 001G, 001H, 001J, 001K, 001L, 001M, 001N, 001P, 001Q, 001R, 001S		001
210A	NAS578-4A		. . RETAINER used on 001A, 001B, 001C, 001D, 001E, 001F, 001G, 001H, 001J, 001K, 001L, 001M, 001N, 001P, 001Q, 001R, 001S		001
220A	NAS1304-22		. . BOLT BUY PN NAS6604-22 used on 001A, 001B, 001C, 001D, 001E, 001F, 001G, 001H, 001J, 001K, 001L, 001M, 001N, 001P, 001Q, 001R, 001S		001
230A	AN960C416		. . WASHER BUY PN NAS1149C0463R used on 001A, 001B, 001C, 001M, 001P, 001S		001
-230B	NAS1149C0463R		. . WASHER used on 001D, 001E, 001F, 001G, 001H, 001J, 001K, 001L, 001N, 001Q, 001R		001
240A	A225401243-500		. . FLAP used on 001A, 001D, 001M, 001N, 001R, 001S		001

- ITEM NOT ILLUSTRATED

FIG. ITEM	PART NUMBER	AIRLINE STOCK NUMBER	NOMENCLATURE 1234567	EFF CODE	UNITS PER ASSY
-240B	A225401243-502		. . FLAP used on 001B, 001E, 001P, 001Q		001
-240C	A225401243-504		. . FLAP used on 001C		001
-240D	A225401243-506		. . FLAP used on 001F		001
-240E	A225401243-508		. . FLAP used on 001G		001
-240F	A225401243-514		. . FLAP used on 001H		001
-240G	A225401243-510		. . FLAP used on 001J		001
-240H	A225401243-512		. . FLAP used on 001K		001
-240J	A225401243-550		. . FLAP used on 001L		001
250A	A225401244-200		. . ANGLE used on 001A, 001B, 001C, 001D, 001E, 001F, 001G, 001H, 001J, 001K, 001M, 001N, 001P, 001Q, 001R, 001S		002
-250B	A225401244-202		. . ANGLE used on 001L		002
260A	NAS1096-2-5		. . SCREW BUY PN NAS1801-08-5 used on 001A, 001B, 001C, 001D, 001E, 001F, 001G, 001H, 001J, 001K, 001L, 001M, 001N, 001P, 001Q, 001R, 001S		004

- ITEM NOT ILLUSTRATED

FIG. ITEM	PART NUMBER	AIRLINE STOCK NUMBER	NOMENCLATURE 1234567	EFF CODE	UNITS PER ASSY
270A	AN960C8		. . WASHER BUY PN NAS1149CN832R used on 001A, 001B, 001C, 001M, 001P, 001S		004
-270B	NAS1149CN832R		. . WASHER used on 001D, 001E, 001F, 001G, 001H, 001J, 001K, 001L, 001N, 001Q, 001R		004
280A	244-20-102		. . CATCH-DOUBLE SPRING BALL used on 001A, 001B, 001C, 001D, 001E, 001F, 001G, 001H, 001J, 001K, 001L, 001M, 001N, 001P, 001Q, 001R, 001S		002
290A	NAS1102-06-4		. . SCREW used on 001A, 001B, 001C, 001D, 001E, 001F, 001G, 001H, 001J, 001K, 001L, 001M, 001N, 001P, 001Q, 001R, 001S		004
300A	AN960C6		. . WASHER BUY PN NAS1149CN632R used on 001A, 001B, 001C, 001M, 001P, 001S		004
-300B	NAS1149CN632R		. . WASHER used on 001D, 001E, 001F, 001G, 001H, 001J, 001K, 001L, 001N, 001Q, 001R		004
310A	NAS1102-04-6		. . SCREW used on 001A, 001B, 001C, 001D, 001E, 001F, 001G, 001H, 001J, 001K, 001L, 001M, 001N, 001P, 001Q, 001R, 001S		004

- ITEM NOT ILLUSTRATED

FIG. ITEM	PART NUMBER	AIRLINE STOCK NUMBER	NOMENCLATURE 1234567	EFF CODE	UNITS PER ASSY
320A	AN960C4		. . WASHER BUY PN NAS1149CN432R used on 001A, 001B, 001C, 001M, 001P, 001S		004
-320B	NAS1149CN432R		. . WASHER used on 001D, 001E, 001F, 001G, 001H, 001J, 001K, 001L, 001N, 001Q, 001R		004
330A	MS21042-04		. . NUT used on 001A, 001B, 001C, 001D, 001E, 001F, 001G, 001H, 001J, 001K, 001L, 001M, 001N, 001P, 001Q, 001R, 001S		004
340A	DAN80A3-100		. . LANYARD used on 001A, 001B, 001C, 001D, 001E, 001F, 001G, 001H, 001J, 001K, 001L, 001M, 001N, 001P, 001Q, 001R, 001S		001
350A	NAS1096-2-4		. . SCREW BUY PN NAS1801-08-4 used on 001A, 001B, 001C, 001D, 001E, 001F, 001G, 001H, 001J, 001K, 001L, 001M, 001N, 001P, 001Q, 001R, 001S		001

- ITEM NOT ILLUSTRATED

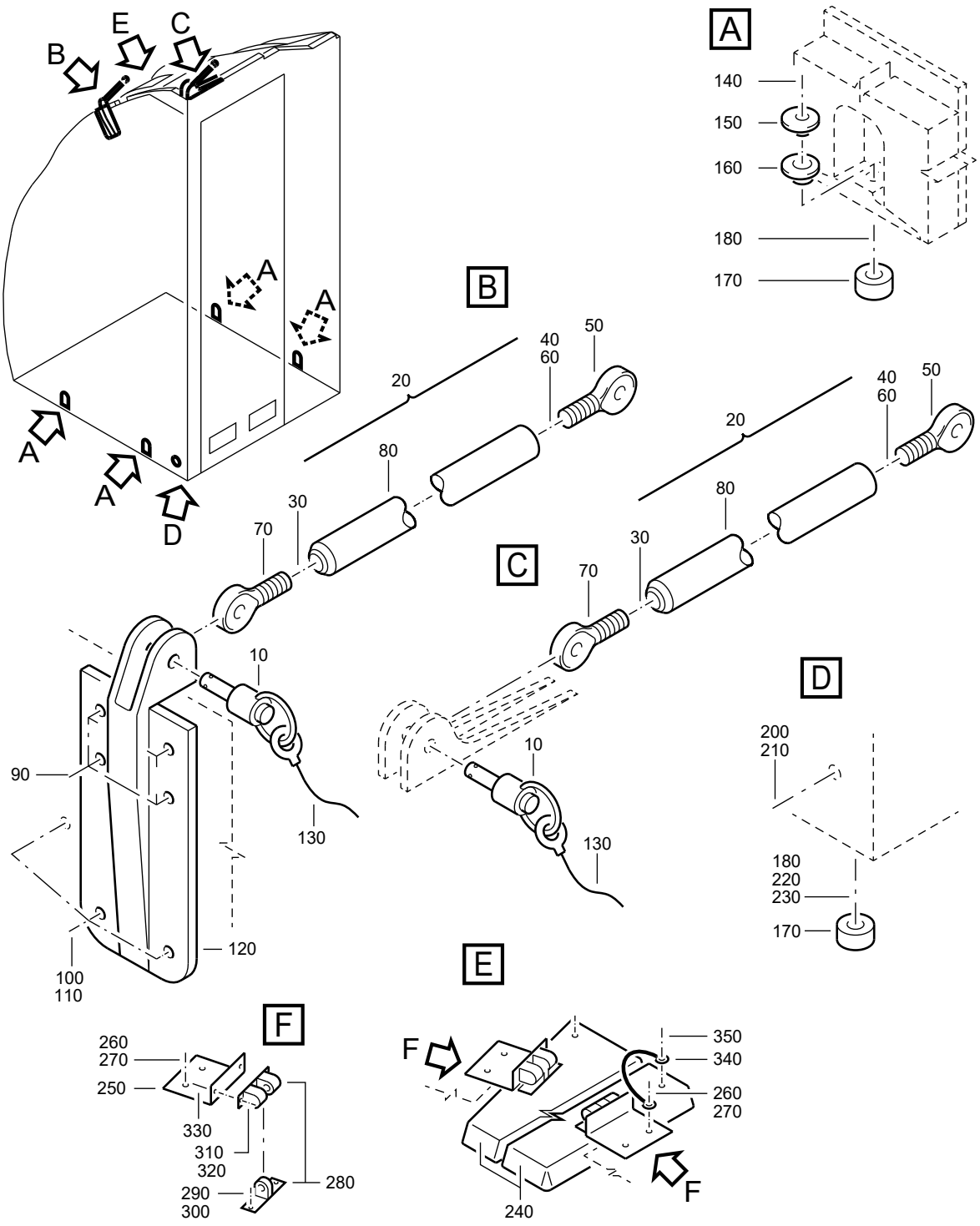

F_PL_254151_02_A_01_00

ATTACHMENT-LAVATORY
Figure 02A/EN254151SHEET02A01

FIG. ITEM	PART NUMBER	AIRLINE STOCK NUMBER	NOMENCLATURE 1234567		EFF CODE	UNITS PER ASSY
02A						
-001A	D2549030510261		. ATTACHMENT-LAVATORY used on 010D (25415101U), 010D (25415101Y), 010D (25415141C) SEE 25-41-51-01U FOR NHA SEE 25-41-51-01Y FOR NHA SEE 25-41-51-41C FOR NHA	NP		RF
-001B	D2549030510061		. ATTACHMENT-LAVATORY used on 010C (25415101V), 010B (25415101W), 010D (25415101Z), 010G (25415141B), 010D (25415141D) SEE 25-41-51-01V FOR NHA SEE 25-41-51-01W FOR NHA SEE 25-41-51-01Z FOR NHA SEE 25-41-51-41B FOR NHA SEE 25-41-51-41D FOR NHA	NP		RF
-001C	D2549030513061		. ATTACHMENT-LAVATORY used on 010D (25415101V), 010F (25415101V), 010F(25415141B), 010F (25415141D) SEE 25-41-51-01V FOR NHA SEE 25-41-51-01V FOR NHA SEE 25-41-51-41B FOR NHA SEE 25-41-51-41D FOR NHA	NP		RF

- ITEM NOT ILLUSTRATED

FIG. ITEM	PART NUMBER	AIRLINE STOCK NUMBER	NOMENCLATURE 1234567		EFF CODE	UNITS PER ASSY
-001D	D2549020700461		. ATTACHMENT-LAVATORY PRE VSB A2-254-25-130 used on 010C (25415101S), 010C (25415101U), 010A (25415101V), 010A (25415101W), 010A (25415101X), 010F(25415101Y), 010B (25415101Z), 010B (254151410), 010C(25415141C), 010B (25415141D) SEE 25-41-51-01S FOR NHA SEE 25-41-51-01U FOR NHA SEE 25-41-51-01V FOR NHA SEE 25-41-51-01W FOR NHA SEE 25-41-51-01X FOR NHA SEE 25-41-51-01Y FOR NHA SEE 25-41-51-01Z FOR NHA SEE 25-41-51-410 FOR NHA SEE 25-41-51-41C FOR NHA SEE 25-41-51-41D FOR NHA	NP		RF
-001E	D2549030513261		. ATTACHMENT-LAVATORY used on 010B (25415101V), 010C (25415101Z) SEE 25-41-51-01V FOR NHA SEE 25-41-51-01Z FOR NHA	NP		RF
-001F	D2549010602661		. ATTACHMENT-LAVATORY used on 010C (25415101X) SEE 25-41-51-01X FOR NHA	NP		RF

- ITEM NOT ILLUSTRATED

FIG. ITEM	PART NUMBER	AIRLINE STOCK NUMBER	NOMENCLATURE 1234567		EFF CODE	UNITS PER ASSY
-001G	D2549030514661		. ATTACHMENT-LAVATORY used on 010A (25415101Y), 010A (25415101Z), 010A(254151410), 010A (25415141A), 010A (25415141C), 010C(25415141D), 010A (25415141K) SEE 25-41-51-01Y FOR NHA SEE 25-41-51-01Z FOR NHA SEE 25-41-51-410 FOR NHA SEE 25-41-51-41A FOR NHA SEE 25-41-51-41C FOR NHA SEE 25-41-51-41D FOR NHA SEE 25-41-51-41K FOR NHA	NP		RF
-001H	D2549030513861		. ATTACHMENT-LAVATORY used on 010B (25415101Y), 010E (25415141B), 010G(25415141D) SEE 25-41-51-01Y FOR NHA SEE 25-41-51-41B FOR NHA SEE 25-41-51-41D FOR NHA	NP		RF
-001J	D2549020700061		. ATTACHMENT-LAVATORY used on 010E (25415101W), 010C (25415101Y), 010C (254151410) SEE 25-41-51-01W FOR NHA SEE 25-41-51-01Y FOR NHA SEE 25-41-51-410 FOR NHA	NP		RF
-001K	D2549020702661		. ATTACHMENT-LAVATORY used on 010E (25415101Y), 010A (25415141R) SEE 25-41-51-01Y FOR NHA SEE 25-41-51-41R FOR NHA	NP		RF

- ITEM NOT ILLUSTRATED

FIG. ITEM	PART NUMBER	AIRLINE STOCK NUMBER	NOMENCLATURE 1234567	EFF CODE	UNITS PER ASSY
-001L	D2549030514861		. ATTACHMENT-LAVATORY NP PRE VSB A2-254-25-013 PRE VSB A2-254-25-130 used on 010E (25415101Z), 010D (254151410), 010C(25415141A), 010B (25415141C), 010A (25415141D), 010A(25415141E), 010C (25415141F), 010C (25415141G), 010A(25415141H), 010A (25415141J), 010B (25415141K), 010A(25415141L), 010A (25415141M), 010B (25415141N), 010B(25415141P), 010B (25415142B), 010C (25415142K) SEE 25-41-51-01Z FOR NHA SEE 25-41-51-410 FOR NHA SEE 25-41-51-41A FOR NHA SEE 25-41-51-41C FOR NHA SEE 25-41-51-41D FOR NHA SEE 25-41-51-41E FOR NHA SEE 25-41-51-41F FOR NHA SEE 25-41-51-41G FOR NHA SEE 25-41-51-41H FOR NHA SEE 25-41-51-41J FOR NHA SEE 25-41-51-41K FOR NHA SEE 25-41-51-41L FOR NHA SEE 25-41-51-41M FOR NHA SEE 25-41-51-41N FOR NHA SEE 25-41-51-41P FOR NHA SEE 25-41-51-42B FOR NHA SEE 25-41-51-42K FOR NHA		RF
-001M	D2549020710061		. ATTACHMENT-LAVATORY NP used on 010B (25415141A), 010B (25415141J) SEE 25-41-51-41A FOR NHA SEE 25-41-51-41J FOR NHA		RF

- ITEM NOT ILLUSTRATED

FIG. ITEM	PART NUMBER	AIRLINE STOCK NUMBER	NOMENCLATURE 1234567		EFF CODE	UNITS PER ASSY
-001N	D2549030603061		. ATTACHMENT-LAVATORY used on 010E (25415141D), 010B (25415141H), 010C (25415141J), 010B (25415141L) SEE 25-41-51-41D FOR NHA SEE 25-41-51-41H FOR NHA SEE 25-41-51-41J FOR NHA SEE 25-41-51-41L FOR NHA	NP		RF
-001P	D2549030514861		. ATTACHMENT-LAVATORY used on 010E (25415141J) SEE 25-41-51-41J FOR NHA	NP		RF
-001Q	D2549030514861		. ATTACHMENT-LAVATORY POST VSB A2-254-25-013 used on 010G (25415142K) SEE 25-41-51-42K FOR NHA	NP		RF
-001R	R22540119604661		. ATTACHMENT-LAVATORY POST VSB A2-254-25-130 used on 010J (254151410) SEE 25-41-51-410 FOR NHA	NP		RF
-001S	R22540119604861		. ATTACHMENT-LAVATORY POST VSB A2-254-25-130 used on 010D (25415141K), 010J (25415141N) SEE 25-41-51-41K FOR NHA SEE 25-41-51-41N FOR NHA	NP		RF
010A	MS17987C409		. . PIN-QUICK RELEASE used on 001A, 001B, 001C, 001D, 001E, 001F, 001G, 001H, 001J, 001K, 001L, 001M, 001N, 001P, 001Q, 001R, 001S			002

- ITEM NOT ILLUSTRATED

FIG. ITEM	PART NUMBER	AIRLINE STOCK NUMBER	NOMENCLATURE 1234567	EFF CODE	UNITS PER ASSY
020A	A225400238-056		. . STRUT ASSY used on 001A, 001B, 001C, 001D, 001E, 001F, 001G, 001H, 001J, 001K, 001L, 001M, 001N, 001P, 001Q, 001R, 001S		002
030A	NAS509L5		. . . NUT used on 020A		001
040A	NAS513-5		. . . WASHER used on 020A		001
050A	NSA8140-06RK		. . . ROD END used on 020A		001
060A	NAS509-6		. . . NUT used on 020A		001
070A	NSA8140-04LK		. . . ROD END used on 020A		001
080A	A225400238-254		. . . STRUT used on 020A		001
090A	NAS1304-2		. . BOLT BUY PN NAS6604-2 used on 001A, 001B, 001C, 001D, 001E, 001F, 001G, 001H, 001J, 001K, 001L, 001M, 001N, 001P, 001Q, 001R, 001S		004
100A	NAS1096-3-7		. . SCREW BUY PN NAS1801-3-7 used on 001A, 001B, 001C, 001D, 001E, 001F, 001G, 001H, 001J, 001K, 001L, 001M, 001N, 001P, 001R, 001S		003
102A	NAS1801-3-7		. . SCREW used on 001Q		002

- ITEM NOT ILLUSTRATED

FIG. ITEM	PART NUMBER	AIRLINE STOCK NUMBER	NOMENCLATURE 1234567	EFF CODE	UNITS PER ASSY
104A	NAS6604-2		. . SCREW used on 001Q		004
110A	NAS1149C0332R		. . WASHER used on 001A, 001B, 001C, 001D, 001E, 001F, 001G, 001H, 001J, 001K, 001L, 001M, 001N, 001P, 001R, 001S		003
-110B	NAS1149C0332R		. . WASHER used on 001Q		006
120A	A225401239-200		. . FITTING used on 001A, 001B, 001C, 001D, 001E, 001F, 001G, 001H, 001J, 001K, 001L, 001M, 001N, 001Q, 001R, 001S		001
-120B	A225401239-204		. . FITTING POST SB 25-1289 used on 001P		001
130A	DAN80A2-200		. . LANYARD used on 001A, 001B, 001C, 001D, 001E, 001F, 001G, 001H, 001J, 001K, 001L, 001M, 001N, 001P, 001Q, 001R, 001S		002
140A	NAS1304-31		. . BOLT BUY PN NAS6604-31 used on 001A, 001B, 001C, 001D, 001E, 001F, 001G, 001H, 001J, 001K, 001L, 001M, 001N, 001P, 001Q, 001R, 001S		004
150A	A225400207-204		. . BUSHING used on 001A, 001B, 001C, 001D, 001E, 001F, 001G, 001H, 001J, 001K, 001L, 001M, 001N, 001P, 001Q, 001R, 001S		004

- ITEM NOT ILLUSTRATED

FIG. ITEM	PART NUMBER	AIRLINE STOCK NUMBER	NOMENCLATURE 1234567	EFF CODE	UNITS PER ASSY
160A	A225400207-206		. . BUSHING used on 001A, 001B, 001C, 001D, 001E, 001F, 001G, 001H, 001J, 001K, 001L, 001M, 001N, 001P, 001Q, 001R, 001S		004
170A	A225400207-200		. . BUSHING used on 001A, 001B, 001C, 001D, 001E, 001F, 001G, 001H, 001J, 001K, 001L, 001M, 001N, 001P, 001Q, 001R, 001S		005
180A	NAS1611-209		. . PACKING BUY PN EN6075-209 used on 001A, 001B, 001C, 001D, 001E, 001F, 001G, 001H, 001J, 001K, 001L, 001M, 001N, 001P, 001Q, 001R, 001S		005
200A	NAS577B4A		. . NUT used on 001A, 001B, 001C, 001D, 001E, 001F, 001G, 001H, 001J, 001K, 001L, 001M, 001N, 001P, 001Q, 001R, 001S		001
210A	NAS578-4A		. . RETAINER used on 001A, 001B, 001C, 001D, 001E, 001F, 001G, 001H, 001J, 001K, 001L, 001M, 001N, 001P, 001Q, 001R, 001S		001
220A	NAS1304-22		. . BOLT BUY PN NAS6604-22 used on 001A, 001B, 001C, 001D, 001E, 001F, 001G, 001H, 001J, 001K, 001L, 001M, 001N, 001P, 001Q, 001R, 001S		001

- ITEM NOT ILLUSTRATED

FIG. ITEM	PART NUMBER	AIRLINE STOCK NUMBER	NOMENCLATURE 1234567	EFF CODE	UNITS PER ASSY
230A	NAS1149C0463R		. . WASHER used on 001A, 001B, 001C, 001D, 001E, 001F, 001G, 001H, 001J, 001K, 001L, 001M, 001N, 001P, 001Q, 001R, 001S		001
240A	A225401243-512		. . FLAP used on 001A		001
-240B	A225401243-508		. . FLAP used on 001B		001
-240C	A225401243-502		. . FLAP used on 001C		001
-240D	A225401243-500		. . FLAP used on 001D		001
-240E	A225401243-510		. . FLAP used on 001E		001
-240F	A225401243-506		. . FLAP used on 001F		001
-240G	A225401243-550		. . FLAP PRE VSB A2-254-25-130 used on 001G, 001L, 001P, 001Q		001
-240H	A225401243-552		. . FLAP used on 001H		001
-240J	A225401243-514		. . FLAP used on 001J		001
-240K	A225401243-556		. . FLAP used on 001K		001
-240L	A225401243-566		. . FLAP used on 001M		001

- ITEM NOT ILLUSTRATED

FIG. ITEM	PART NUMBER	AIRLINE STOCK NUMBER	NOMENCLATURE 1234567	EFF CODE	UNITS PER ASSY
-240M	A225401243-560		. . FLAP used on 001N		001
-240N	A225401243-564		. . FLAP POST VSB A2-254-25-130 used on 001R, 001S		001
250A	A225401244-200		. . ANGLE used on 001A, 001B, 001C, 001D, 001E, 001F, 001G, 001H, 001J, 001K, 001R		002
-250B	A225401244-202		. . ANGLE used on 001L, 001M, 001N, 001P, 001Q, 001S		002
260A	NAS1096-2-5		. . SCREW BUY PN NAS1801-08-5 used on 001A, 001B, 001C, 001D, 001E, 001F, 001G, 001H, 001J, 001K, 001L, 001M, 001N, 001P, 001Q, 001R, 001S		004
270A	NAS1149CN832R		. . WASHER used on 001A, 001B, 001C, 001D, 001E, 001F, 001G, 001H, 001J, 001K, 001L, 001M, 001N, 001P, 001Q, 001R, 001S		004
280A	244-20-102		. . CATCH-DOUBLE SPRING BALL used on 001A, 001B, 001C, 001D, 001E, 001F, 001G, 001H, 001J, 001K, 001L, 001M, 001N, 001P, 001Q, 001R, 001S		002

- ITEM NOT ILLUSTRATED

FIG. ITEM	PART NUMBER	AIRLINE STOCK NUMBER	NOMENCLATURE 1234567	EFF CODE	UNITS PER ASSY
290A	NAS1102-06-4		. . SCREW used on 001A, 001B, 001C, 001D, 001E, 001F, 001G, 001H, 001J, 001K, 001L, 001M, 001N, 001P, 001Q, 001R, 001S		004
300A	NAS1149CN632R		. . WASHER used on 001A, 001B, 001C, 001D, 001E, 001F, 001G, 001H, 001J, 001K, 001L, 001M, 001N, 001P, 001Q, 001R, 001S		004
310A	NAS1102-04-6		. . SCREW used on 001A, 001B, 001C, 001D, 001E, 001F, 001G, 001H, 001J, 001K, 001L, 001M, 001N, 001P, 001Q, 001R, 001S		004
320A	NAS1149CN432R		. . WASHER used on 001A, 001B, 001C, 001D, 001E, 001F, 001G, 001H, 001J, 001K, 001L, 001M, 001N, 001P, 001Q, 001R, 001S		004
330A	MS21042-04		. . NUT used on 001A, 001B, 001C, 001D, 001E, 001F, 001G, 001H, 001J, 001K, 001L, 001M, 001N, 001P, 001Q, 001R, 001S		004
340A	DAN80A3-100		. . LANYARD used on 001A, 001B, 001C, 001D, 001E, 001F, 001G, 001H, 001J, 001K, 001L, 001M, 001N, 001P, 001Q, 001R, 001S		001

- ITEM NOT ILLUSTRATED

FIG. ITEM	PART NUMBER	AIRLINE STOCK NUMBER	NOMENCLATURE 1234567	EFF CODE	UNITS PER ASSY
350A	NAS1096-2-4		. . SCREW BUY PN NAS1801-08-4 used on 001A, 001B, 001C, 001D, 001E, 001F, 001G, 001H, 001J, 001K, 001L, 001M, 001N, 001P, 001Q, 001R, 001S		001

- ITEM NOT ILLUSTRATED

THIS PAGE IS INTENTIONALLY LEFT BLANK

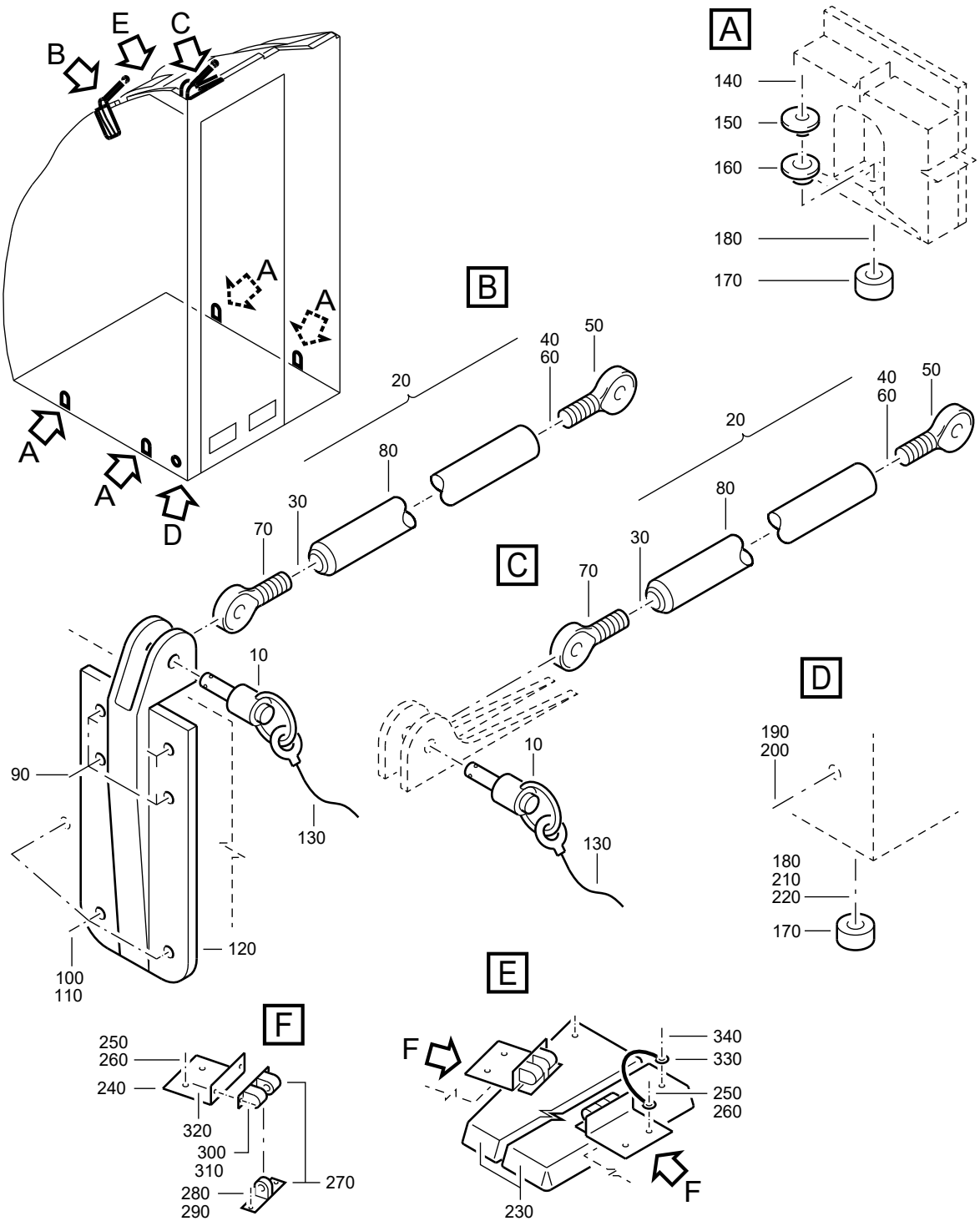

F_PL_254151_02_B_01_00

ATTACHMENT-LAVATORY
Figure 02B/EN254151SHEET02B01

FIG. ITEM	PART NUMBER	AIRLINE STOCK NUMBER	NOMENCLATURE 1234567	EFF CODE	UNITS PER ASSY
02B					
-001A	D2549020708061		. ATTACHMENT-LAVATORY NP used on 010E (25415141G) SEE 25-41-51-41G FOR NHA		RF
-001B	D2549020709461		. ATTACHMENT-LAVATORY NP used on 010D (25415141A), 010B (25415141F) SEE 25-41-51-41A FOR NHA SEE 25-41-51-41F FOR NHA		RF
-001C	D2549030604261		. ATTACHMENT-LAVATORY NP used on 010A (25415141G) SEE 25-41-51-41G FOR NHA		RF
-001D	D2549030608261		. ATTACHMENT-LAVATORY NP used on 010B (25415141G), 010D (25415141M) SEE 25-41-51-41G FOR NHA SEE 25-41-51-41M FOR NHA		RF
-001E	D2549030607461		. ATTACHMENT-LAVATORY NP used on 010D (25415141G), 010C (25415141H), 010C (25415141K), 010B (25415141M) SEE 25-41-51-41G FOR NHA SEE 25-41-51-41H FOR NHA SEE 25-41-51-41K FOR NHA SEE 25-41-51-41M FOR NHA		RF
-001F	D2549030605261		. ATTACHMENT-LAVATORY NP used on 010E (254151420) SEE 25-41-51-420 FOR NHA		RF

- ITEM NOT ILLUSTRATED

FIG. ITEM	PART NUMBER	AIRLINE STOCK NUMBER	NOMENCLATURE 1234567		EFF CODE	UNITS PER ASSY
-001G	D2549020400861		. ATTACHMENT-LAVATORY PRE VSB A2-254-25-106 PRE VSB A2-254-25-130 used on 010C (25415142E), 010C (25415142G), 010F (25415142K), 010C (25415142L), 010B (25415142M), 010A (25415142N) SEE 25-41-51-42E FOR NHA SEE 25-41-51-42G FOR NHA SEE 25-41-51-42K FOR NHA SEE 25-41-51-42L FOR NHA SEE 25-41-51-42M FOR NHA SEE 25-41-51-42N FOR NHA	NP		RF
-001H	D2549040500861		. ATTACHMENT-LAVATORY used on 010C (25415142H), 010E (25415142K), 010C (25415142M), 010C (25415142N), 010C (25415142P), 010C(25415142Q), 010D (25415142R), 010B (25415142S), 010C(25415142T) SEE 25-41-51-42H FOR NHA SEE 25-41-51-42K FOR NHA SEE 25-41-51-42M FOR NHA SEE 25-41-51-42N FOR NHA SEE 25-41-51-42P FOR NHA SEE 25-41-51-42Q FOR NHA SEE 25-41-51-42R FOR NHA SEE 25-41-51-42S FOR NHA SEE 25-41-51-42T FOR NHA	NP		RF
-001J	D2549010401661		. ATTACHMENT-LAVATORY used on 010B (25415142J) SEE 25-41-51-42J FOR NHA	NP		RF

- ITEM NOT ILLUSTRATED

FIG. ITEM	PART NUMBER	AIRLINE STOCK NUMBER	NOMENCLATURE 1234567	EFF CODE	UNITS PER ASSY
-001K	D2549030414061		. ATTACHMENT-LAVATORY NP used on 010D (25415142N), 010B (25415142Q), 010A (25415142R), 010C (25415142S), 010B (25415142T), 010B(25415142U) SEE 25-41-51-42N FOR NHA SEE 25-41-51-42Q FOR NHA SEE 25-41-51-42R FOR NHA SEE 25-41-51-42S FOR NHA SEE 25-41-51-42T FOR NHA SEE 25-41-51-42U FOR NHA		RF
-001L	R22540168900461		. ATTACHMENT-LAVATORY NP POST VSB A2-254-25-106 used on 010E (25415142L) SEE 25-41-51-42L FOR NHA		RF
-001M	R22540119606461		. ATTACHMENT-LAVATORY NP POST VSB A2-254-25-130 used on 010E (25415142E) SEE 25-41-51-42E FOR NHA		RF
010A	MS17987C409		. . PIN-QUICK RELEASE used on 001A, 001B, 001C, 001D, 001E, 001F, 001G, 001H, 001J, 001K, 001L, 001M		002
020A	A225400238-056		. . STRUT ASSY used on 001A, 001B, 001C, 001D, 001E, 001F, 001G, 001H, 001J, 001K, 001L, 001M		002
030A	NAS509L5		. . . NUT used on 020A		001
040A	NAS513-5		. . . WASHER used on 020A		001
050A	NSA8140-06RK		. . . ROD END used on 020A		001

- ITEM NOT ILLUSTRATED

FIG. ITEM	PART NUMBER	AIRLINE STOCK NUMBER	NOMENCLATURE 1234567	EFF CODE	UNITS PER ASSY
060A	NAS509-6		. . . NUT used on 020A		001
070A	NSA8140-04LK		. . . ROD END used on 020A		001
080A	A225400238-254		. . . STRUT used on 020A		001
090A	NAS1304-2		. . BOLT BUY PN NAS6604-2 used on 001A, 001B, 001C, 001D, 001E, 001F, 001G, 001H, 001J, 001K, 001L, 001M		004
100A	NAS1096-3-7		. . SCREW BUY PN NAS1801-3-7 used on 001A, 001B, 001C, 001D, 001E, 001F, 001G, 001H, 001J, 001K, 001L, 001M		003
110A	NAS1149C0332R		. . WASHER used on 001A, 001B, 001C, 001D, 001E, 001F, 001G, 001H, 001J, 001K, 001L, 001M		003
120A	A225401239-200		. . FITTING used on 001A, 001B, 001C, 001D, 001E		001
-120B	A225401239-204		. . FITTING used on 001F		001
-120C	A225401239-000		. . FITTING ASSY used on 001G, 001J, 001L, 001M		001
-120D	A225401239-002		. . FITTING ASSY used on 001G, 001H, 001J, 001K, 001L, 001M		001

- ITEM NOT ILLUSTRATED

FIG. ITEM	PART NUMBER	AIRLINE STOCK NUMBER	NOMENCLATURE 1234567	EFF CODE	UNITS PER ASSY
130A	DAN80A2-200		. . LANYARD used on 001A, 001B, 001C, 001D, 001E, 001F, 001G, 001H, 001J, 001K, 001L, 001M		002
140A	NAS1304-31		. . BOLT BUY PN NAS6604-31 used on 001A, 001B, 001C, 001D, 001E, 001F, 001G, 001H, 001J, 001K, 001L, 001M		004
150A	A225400207-204		. . BUSHING used on 001A, 001B, 001C, 001D, 001E, 001F, 001G, 001H, 001J, 001K, 001L, 001M		004
160A	A225400207-206		. . BUSHING used on 001A, 001B, 001C, 001D, 001E, 001F, 001G, 001H, 001J, 001K, 001L, 001M		004
170A	A225400207-200		. . BUSHING used on 001A, 001B, 001C, 001D, 001E, 001F, 001G, 001H, 001J, 001K, 001L, 001M		005
180A	NAS1611-209		. . PACKING BUY PN EN6075-209 used on 001A, 001B, 001C, 001D, 001E, 001F, 001G, 001H, 001J, 001K, 001L, 001M		005
190A	NAS577B4A		. . NUT used on 001A, 001B, 001C, 001D, 001E, 001F, 001G, 001H, 001J, 001K, 001L, 001M		001

- ITEM NOT ILLUSTRATED

FIG. ITEM	PART NUMBER	AIRLINE STOCK NUMBER	NOMENCLATURE 1234567	EFF CODE	UNITS PER ASSY
200A	NAS578-4A		. . RETAINER used on 001A, 001B, 001C, 001D, 001E, 001F, 001G, 001H, 001J, 001K, 001L, 001M		001
210A	NAS1304-22		. . BOLT BUY PN NAS6604-22 used on 001A, 001B, 001C, 001D, 001E, 001F, 001G, 001H, 001J, 001K, 001L, 001M		001
220A	NAS1149C0463R		. . WASHER used on 001A, 001B, 001C, 001D, 001E, 001F, 001G, 001H, 001J, 001K, 001L, 001M		001
230A	A225401243-564		. . FLAP POST VSB A2-254-25-130 used on 001A, 001M, 001K		001
-230B	A225401243-560		. . FLAP used on 001B		001
-230C	A225401243-556		. . FLAP used on 001C, 001J		001
-230D	A225401243-558		. . FLAP used on 001D		001
-230E	A225401243-552		. . FLAP used on 001E		001
-230F	A225401243-550		. . FLAP PRE VSB A2-254-25-130 PRE VSB A2-254-25-106 used on 001F, 001G, 001H		001
-230G	A225401243-582		. . FLAP POST VSB A2-254-25-106 used on 001L		001

- ITEM NOT ILLUSTRATED

FIG. ITEM	PART NUMBER	AIRLINE STOCK NUMBER	NOMENCLATURE 1234567	EFF CODE	UNITS PER ASSY
240A	A225401244-202		. . ANGLE used on 001A, 001B, 001C, 001D, 001E, 001F, 001G, 001H, 001J, 001K, 001L, 001M		002
250A	NAS1096-2-5		. . SCREW BUY PN NAS1801-08-5 used on 001A, 001B, 001C, 001D, 001E, 001F, 001G, 001H, 001J, 001K, 001L, 001M		004
260A	NAS1149CN832R		. . WASHER used on 001A, 001B, 001C, 001D, 001E, 001F, 001G, 001H, 001J, 001K, 001L, 001M		004
270A	244-20-102		. . CATCH-DOUBLE SPRING BALL used on 001A, 001B, 001C, 001D, 001E, 001F, 001G, 001H, 001J, 001K, 001L, 001M		002
280A	NAS1102-06-4		. . SCREW used on 001A, 001B, 001C, 001D, 001E, 001F, 001G, 001H, 001J, 001K, 001L, 001M		004
290A	NAS1149CN632R		. . WASHER used on 001A, 001B, 001C, 001D, 001E, 001F, 001G, 001H, 001J, 001K, 001L, 001M		004
300A	NAS1102-04-6		. . SCREW used on 001A, 001B, 001C, 001D, 001E, 001F, 001G, 001H, 001J, 001K, 001L, 001M		004

- ITEM NOT ILLUSTRATED

FIG. ITEM	PART NUMBER	AIRLINE STOCK NUMBER	NOMENCLATURE 1234567	EFF CODE	UNITS PER ASSY
310A	NAS1149CN432R		. . WASHER used on 001A, 001B, 001C, 001D, 001E, 001F, 001G, 001H, 001J, 001K, 001L, 001M		004
320A	MS21042-04		. . NUT used on 001A, 001B, 001C, 001D, 001E, 001F, 001G, 001H, 001J, 001K, 001L, 001M		004
330A	DAN80A3-100		. . LANYARD used on 001A, 001B, 001C, 001D, 001E, 001F, 001G, 001H, 001J, 001K, 001L, 001M		001
340A	NAS1096-2-4		. . SCREW BUY PN NAS1801-08-4 used on 001A, 001B, 001C, 001D, 001E, 001F, 001G, 001H, 001J, 001K, 001L, 001M		001

- ITEM NOT ILLUSTRATED

THIS PAGE IS INTENTIONALLY LEFT BLANK

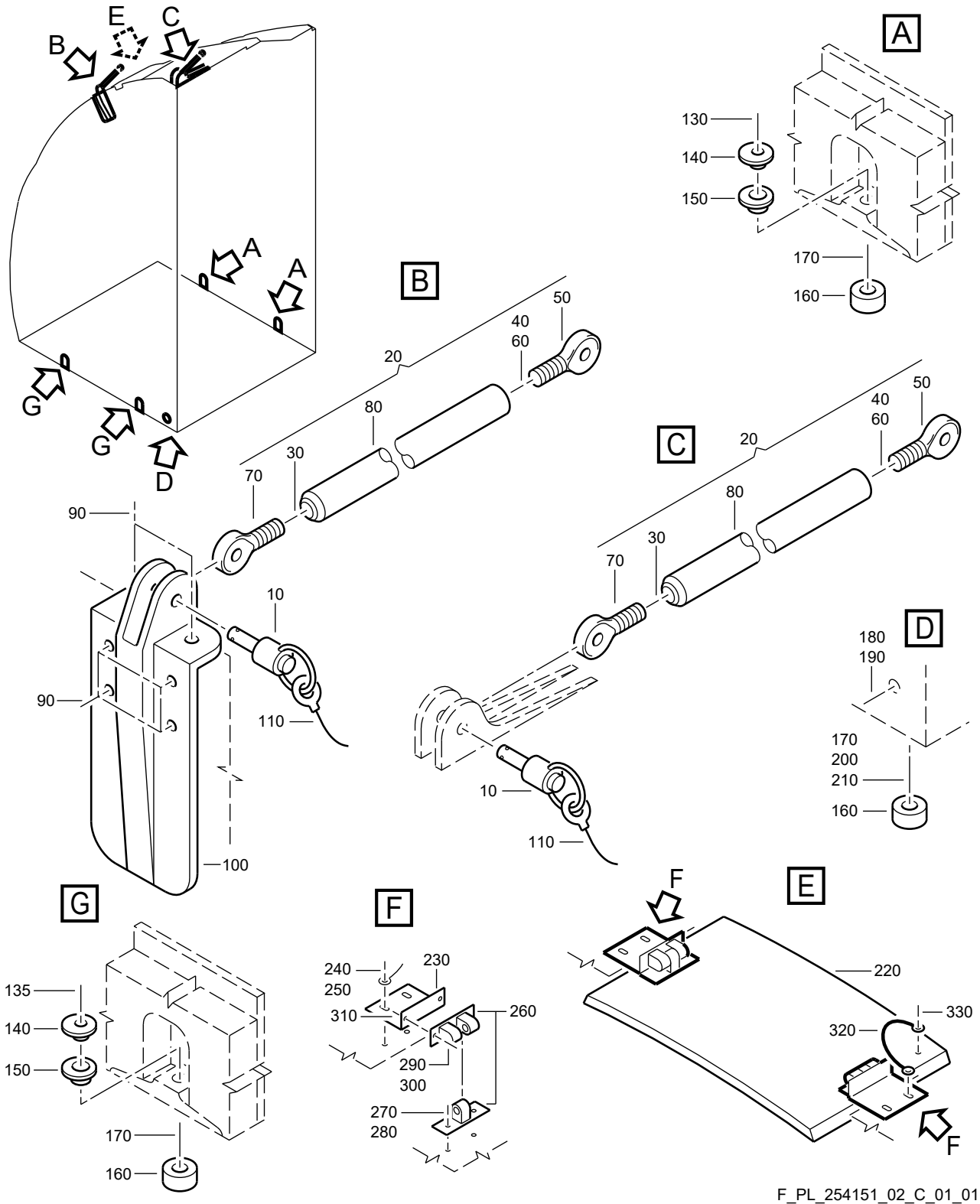

F_PL_254151_02_C_01_01

ATTACHMENT-LAVATORY
Figure 02C/EN254151SHEET02C01

FIG. ITEM	PART NUMBER	AIRLINE STOCK NUMBER	NOMENCLATURE 1234567	EFF CODE	UNITS PER ASSY
02C					
-001A	D2549010610261		. ATTACHMENT-LAVATORY NP used on 010F (25415141N), 010C (25415141R), 010D (254151420) SEE 25-41-51-41N FOR NHA SEE 25-41-51-41R FOR NHA SEE 25-41-51-420 FOR NHA		RF
-001B	D2549030612861		. ATTACHMENT-LAVATORY NP used on 010C (25415141M), 010C (25415141N), 010B (25415141T), 010D (25415141W), 010C (25415141X), 010A(254151420), 010D (25415142E) SEE 25-41-51-41M FOR NHA SEE 25-41-51-41N FOR NHA SEE 25-41-51-41T FOR NHA SEE 25-41-51-41W FOR NHA SEE 25-41-51-41X FOR NHA SEE 25-41-51-420 FOR NHA SEE 25-41-51-42E FOR NHA		RF

- ITEM NOT ILLUSTRATED

FIG. ITEM	PART NUMBER	AIRLINE STOCK NUMBER	NOMENCLATURE 1234567	EFF CODE	UNITS PER ASSY
-001C	D2549030608061		. ATTACHMENT-LAVATORY NP PRE VSB A2-254-25-013 PRE VSB A2-254-25-130 used on 010C (25415141L), 010D (25415141N), 010A(25415141P), 010A (25415141Q), 010B (25415141R), 010A(25415141S), 010A (25415141T), 010A (25415141U), 010A(25415141V), 010A (25415141W), 010A (25415141X), 010A(25415141Y), 010A (25415141Z), 010C (254151420), 010A(25415142A), 010A (25415142B), 010B (25415142C), 010B(25415142D), 010A (25415142F) SEE 25-41-51-41L FOR NHA SEE 25-41-51-41N FOR NHA SEE 25-41-51-41P FOR NHA SEE 25-41-51-41Q FOR NHA SEE 25-41-51-41R FOR NHA SEE 25-41-51-41S FOR NHA SEE 25-41-51-41T FOR NHA SEE 25-41-51-41U FOR NHA SEE 25-41-51-41V FOR NHA SEE 25-41-51-41W FOR NHA SEE 25-41-51-41X FOR NHA SEE 25-41-51-41Y FOR NHA SEE 25-41-51-41Z FOR NHA SEE 25-41-51-420 FOR NHA SEE 25-41-51-42A FOR NHA SEE 25-41-51-42B FOR NHA SEE 25-41-51-42C FOR NHA SEE 25-41-51-42D FOR NHA SEE 25-41-51-42F FOR NHA		RF

- ITEM NOT ILLUSTRATED

FIG. ITEM	PART NUMBER	AIRLINE STOCK NUMBER	NOMENCLATURE 1234567		EFF CODE	UNITS PER ASSY
-001D	D2549020512461		. ATTACHMENT-LAVATORY used on 010A (25415141F), 010D (25415141H), 010E(25415141N), 010B (25415141W), 010B (25415141X), 010B(254151420) SEE 25-41-51-41F FOR NHA SEE 25-41-51-41H FOR NHA SEE 25-41-51-41N FOR NHA SEE 25-41-51-41W FOR NHA SEE 25-41-51-41X FOR NHA SEE 25-41-51-420 FOR NHA	NP		RF
-001E	D2549030614661		. ATTACHMENT-LAVATORY used on 010C (25415141P) SEE 25-41-51-41P FOR NHA	NP		RF
-001F	D2549010609061		. ATTACHMENT-LAVATORY used on 010A (25415141N), 010C (25415141W) SEE 25-41-51-41N FOR NHA SEE 25-41-51-41W FOR NHA	NP		RF
-001G	D2549020802461		. ATTACHMENT-LAVATORY used on 010B (25415141V), 010B (25415141Y) SEE 25-41-51-41V FOR NHA SEE 25-41-51-41Y FOR NHA	NP		RF

- ITEM NOT ILLUSTRATED

FIG. ITEM	PART NUMBER	AIRLINE STOCK NUMBER	NOMENCLATURE 1234567	EFF CODE	UNITS PER ASSY
-001H	D2549010613861		. ATTACHMENT-LAVATORY NP PRE VSB A2-254-25-013 PRE VSB A2-254-25-106 PRE VSB A2-254-25-130 used on 010B (25415141Z), 010F (254151420), 010B(25415142A), 010C (25415142B), 010A (25415142C), 010A(25415142D), 010B (25415142E), 010B (25415142F), 010A(25415142G), 010B (25415142H), 010A (25415142J), 010A(25415142K), 010A (25415142L), 010A (25415142M), 010B(25415142N), 010A (25415142P) SEE 25-41-51-41Z FOR NHA SEE 25-41-51-420 FOR NHA SEE 25-41-51-42A FOR NHA SEE 25-41-51-42B FOR NHA SEE 25-41-51-42C FOR NHA SEE 25-41-51-42D FOR NHA SEE 25-41-51-42E FOR NHA SEE 25-41-51-42F FOR NHA SEE 25-41-51-42G FOR NHA SEE 25-41-51-42H FOR NHA SEE 25-41-51-42J FOR NHA SEE 25-41-51-42K FOR NHA SEE 25-41-51-42L FOR NHA SEE 25-41-51-42M FOR NHA SEE 25-41-51-42N FOR NHA SEE 25-41-51-42P FOR NHA		RF
-001J	D2549020601261		. ATTACHMENT-LAVATORY NP used on 010C (25415101E), 010E (25415101L) SEE 25-41-51-01E FOR NHA SEE 25-41-51-01L FOR NHA		RF

- ITEM NOT ILLUSTRATED

FIG. ITEM	PART NUMBER	AIRLINE STOCK NUMBER	NOMENCLATURE 1234567		EFF CODE	UNITS PER ASSY
-001K	D2549030408261		. ATTACHMENT-LAVATORY used on 010C (25415142D), 010B (25415142L) SEE 25-41-51-42D FOR NHA SEE 25-41-51-42L FOR NHA	NP		RF
-001L	D2549020805261		. ATTACHMENT-LAVATORY used on 010A (25415142E), 010B (25415142K) SEE 25-41-51-42E FOR NHA SEE 25-41-51-42K FOR NHA	NP		RF
-001M	D2549030410261		. ATTACHMENT-LAVATORY used on 010C (25415142F), 010B (25415142G), 010A(25415142H) SEE 25-41-51-42F FOR NHA SEE 25-41-51-42G FOR NHA SEE 25-41-51-42H FOR NHA	NP		RF
-001N	D2547160007261		. ATTACHMENT-LAVATORY POST SB 25-1640 used on 010E (25415142B) SEE 25-41-51-42B FOR NHA	NP		RF
-001P	D2549010613861		. ATTACHMENT-LAVATORY POST VSB A2-254-25-013 used on 010D (25415142D) SEE 25-41-51-42D FOR NHA	NP		RF
-001Q	D2549030608061		. ATTACHMENT-LAVATORY POST VSB A2-254-25-013 used on 010E (25415141P) SEE 25-41-51-41P FOR NHA	NP		RF
-001R	R22540166200061		. ATTACHMENT-LAVATORY POST VSB A2-254-25-106 used on 010C (25415142C), 010D (25415142G) SEE 25-41-51-42C FOR NHA SEE 25-41-51-42G FOR NHA	NP		RF

- ITEM NOT ILLUSTRATED

FIG. ITEM	PART NUMBER	AIRLINE STOCK NUMBER	NOMENCLATURE 1234567	EFF CODE	UNITS PER ASSY
-001S	R22540119605261		. ATTACHMENT-LAVATORY NP POST VSB A2-254-25-130 used on 010F (25415141R), 010F (25415141W), 010F (25415141X), 010G (254151420) SEE 25-41-51-41R FOR NHA SEE 25-41-51-41W FOR NHA SEE 25-41-51-41X FOR NHA SEE 25-41-51-420 FOR NHA		RF
-001T	R22540119606261		. ATTACHMENT-LAVATORY NP POST VSB A2-254-25-130 used on 010H (254151420), 010C (25415142J) SEE 25-41-51-420 FOR NHA SEE 25-41-51-420J FOR NHA		RF
010A	MS17987C409		. . PIN-QUICK RELEASE used on 001A, 001B, 001C, 001D, 001E, 001F, 001G, 001H, 001J, 001K, 001L, 001M, 001N, 001P, 001Q, 001R, 001S, 001T		002
020A	A225400238-056		. . STRUT ASSY used on 001A, 001B, 001C, 001D, 001E, 001F, 001G, 001H, 001K, 001L, 001M, 001N, 001P, 001Q, 001R, 001S, 001T		002
-020B	A225400238-000		. . STRUT ASSY used on 001J		002
030A	NAS509L5		. . . NUT used on 020A, 020B		001
040A	NAS513-5		. . . WASHER used on 020A, 020B		001
050A	NSA8140-06RK		. . . ROD END used on 020A		001

- ITEM NOT ILLUSTRATED

FIG. ITEM	PART NUMBER	AIRLINE STOCK NUMBER	NOMENCLATURE 1234567	EFF CODE	UNITS PER ASSY
-050B	NSA8140-04RK		. . . ROD END used on 020B		001
060A	NAS509-6		. . . NUT used on 020A		001
-060B	NAS509-5		. . . NUT used on 020B		001
070A	NSA8140-04LK		. . . ROD END used on 020A, 020B		001
080A	A225400238-254		. . . STRUT used on 020A		001
-080B	A225400238-200		. . . STRUT used on 020B		001
090A	NAS1304-2		. . BOLT BUY PN NAS6604-2 used on 001A, 001B, 001C, 001D, 001E, 001F, 001G, 001H, 001J, 001K, 001L, 001M, 001R, 001S, 001T		006
-090B	NAS6604-2		. . BOLT POST SB 25-1640 used on 001N		006
-092A	NAS1801-3-7		. . SCREW used on 001P, 001Q		002
-094A	NAS6604-2		. . SCREW used on 001P, 001Q		004
-096A	NAS1149C0332R		. . WASHER used on 001P, 001Q		006

- ITEM NOT ILLUSTRATED

FIG. ITEM	PART NUMBER	AIRLINE STOCK NUMBER	NOMENCLATURE 1234567	EFF CODE	UNITS PER ASSY
100A	A225401239-204		. . FITTING used on 001A, 001C, 001D, 001E, 001F, 001G, 001J, 001Q, 001S		001
-100B	A225401239-000		. . FITTING ASSY used on 001B, 001H, 001K, 001L, 001M, 001P, 001R, 001T		001
-100C	A225401239-002		. . FITTING ASSY POST SB 25-1640 used on 001B, 001H, 001K, 001L, 001M, 001N, 001P, 001R, 001T		001
110A	DAN80A2-200		. . LANYARD used on 001A, 001B, 001C, 001D, 001E, 001F, 001G, 001H, 001J, 001K, 001L, 001M, 001N, 001P, 001Q, 001R, 001S, 001T		002
130A	NAS1304-31		. . BOLT BUY PN NAS6604-31 used on 001A, 001B, 001C, 001D, 001E, 001F, 001G, 001H, 001J, 001K, 001L, 001M, 001N, 001P, 001Q, 001R, 001S, 001T		002
135A	NAS1304-31		. . BOLT BUY PN NAS6604-31 used on 001A, 001B, 001C, 001D, 001E, 001F, 001G, 001H, 001J, 001K, 001L, 001M, 001P, 001Q, 001R, 001S, 001T		002
-135B	NAS6604-31		. . BOLT POST SB 25-1640 used on 001N		002

- ITEM NOT ILLUSTRATED

FIG. ITEM	PART NUMBER	AIRLINE STOCK NUMBER	NOMENCLATURE 1234567	EFF CODE	UNITS PER ASSY
140A	A225400207-204		. . BUSHING used on 001A, 001B, 001C, 001D, 001E, 001F, 001G, 001H, 001J, 001K, 001L, 001M, 001N, 001P, 001Q, 001R, 001S, 001T		004
150A	A225400207-206		. . BUSHING used on 001A, 001B, 001C, 001D, 001E, 001F, 001G, 001H, 001J, 001K, 001L, 001M, 001N, 001P, 001Q, 001R, 001S, 001T		004
160A	A225400207-200		. . BUSHING used on 001A, 001B, 001C, 001D, 001E, 001F, 001G, 001H, 001J, 001K, 001L, 001M, 001N, 001P, 001Q, 001R, 001S, 001T		005
170A	NAS1611-209		. . PACKING BUY PN EN6075-209 used on 001A, 001B, 001C, 001D, 001E, 001F, 001G, 001H, 001J, 001K, 001L, 001M, 001N, 001P, 001Q, 001R, 001S, 001T		005
180A	NAS577B4A		. . NUT used on 001A, 001B, 001C, 001D, 001E, 001F, 001G, 001H, 001J, 001K, 001L, 001M, 001N, 001P, 001Q, 001R, 001S, 001T		001
190A	NAS578-4A		. . RETAINER used on 001A, 001B, 001C, 001D, 001E, 001F, 001G, 001H, 001J, 001K, 001L, 001M, 001N, 001P, 001Q, 001R, 001S, 001T		001

- ITEM NOT ILLUSTRATED

FIG. ITEM	PART NUMBER	AIRLINE STOCK NUMBER	NOMENCLATURE 1234567	EFF CODE	UNITS PER ASSY
200A	NAS1304-22		. . BOLT BUY PN NAS6604-22 used on 001A, 001B, 001C, 001D, 001E, 001F, 001G, 001H, 001J, 001K, 001L, 001M, 001P, 001Q, 001R, 001S, 001T		001
-200B	NAS6604-22		. . BOLT POST SB 25-1640 used on 001N		001
210A	NAS1149C0463R		. . WASHER used on 001A, 001B, 001C, 001D, 001E, 001F, 001G, 001H, 001J, 001K, 001L, 001M, 001N, 001P, 001Q, 001R, 001S, 001T		001
220A	A225401243-556		. . FLAP used on 001A		001
-220B	A225401243-552		. . FLAP used on 001B		001
-220C	A225401243-550		. . FLAP PRE VSB A2-254-25-130 PRE VSB A2-254-25-106 POST SB 25-1640 used on 001C, 001H, 001N, 001P, 001Q		001
-220D	A225401243-562		. . FLAP used on 001D		001
-220E	A225401243-564		. . FLAP POST VSB A2-254-25-130 used on 001E, 001M, 001S, 001T		001
-220F	A225401243-558		. . FLAP used on 001F		001

- ITEM NOT ILLUSTRATED

FIG. ITEM	PART NUMBER	AIRLINE STOCK NUMBER	NOMENCLATURE 1234567	EFF CODE	UNITS PER ASSY
-220G	A225401243-566		. . FLAP used on 001G, 001L		001
-220H	A225401243-500		. . FLAP used on 001J		001
-220J	A225401243-568		. . FLAP used on 001K		001
-220K	A225401243-582		. . FLAP POST VSB A2-254-25-106 used on 001R		001
230A	A225401244-202		. . ANGLE used on 001A, 001B, 001C, 001D, 001E, 001F, 001G, 001H, 001K, 001L, 001M, 001N, 001P, 001Q, 001R, 001S, 001T		002
-230B	A225401244-200		. . ANGLE used on 001J		002
240A	NAS1096-2-5		. . SCREW BUY PN NAS1801-08-5 used on 001A, 001B, 001C, 001D, 001E, 001F, 001G, 001H, 001J, 001K, 001L, 001M, 001N, 001P, 001Q, 001R, 001S, 001T		004
250A	NAS1149CN832R		. . WASHER used on 001A, 001B, 001C, 001D, 001E, 001F, 001G, 001H, 001J, 001K, 001L, 001M, 001N, 001P, 001Q, 001R, 001S, 001T		004

- ITEM NOT ILLUSTRATED

FIG. ITEM	PART NUMBER	AIRLINE STOCK NUMBER	NOMENCLATURE 1234567	EFF CODE	UNITS PER ASSY
260A	244-20-102		. . CATCH-DOUBLE SPRING BALL used on 001A, 001B, 001C, 001D, 001E, 001F, 001G, 001H, 001J, 001K, 001L, 001M, 001N, 001P, 001Q, 001R, 001S, 001T		002
270A	NAS1102-06-4		. . SCREW used on 001A, 001B, 001C, 001D, 001E, 001F, 001G, 001H, 001J, 001K, 001L, 001M, 001N, 001P, 001Q, 001R, 001S, 001T		004
280A	NAS1149CN632R		. . WASHER used on 001A, 001B, 001C, 001D, 001E, 001F, 001G, 001H, 001J, 001K, 001L, 001M, 001N, 001P, 001Q, 001R, 001S, 001T		004
290A	NAS1102-04-6		. . SCREW used on 001A, 001B, 001C, 001D, 001E, 001F, 001G, 001H, 001J, 001K, 001L, 001M, 001N, 001P, 001Q, 001R, 001S, 001T		004
300A	NAS1149CN432R		. . WASHER used on 001A, 001B, 001C, 001D, 001E, 001F, 001G, 001H, 001J, 001K, 001L, 001M, 001N, 001P, 001Q, 001R, 001S, 001T		004
310A	MS21042-04		. . NUT used on 001A, 001B, 001C, 001D, 001E, 001F, 001G, 001H, 001J, 001K, 001L, 001M, 001N, 001P, 001Q, 001R, 001S, 001T		004

- ITEM NOT ILLUSTRATED

FIG. ITEM	PART NUMBER	AIRLINE STOCK NUMBER	NOMENCLATURE 1234567	EFF CODE	UNITS PER ASSY
320A	DAN80A3-100		. . LANYARD used on 001A, 001B, 001C, 001D, 001E, 001F, 001G, 001H, 001J, 001K, 001L, 001M, 001N, 001P, 001Q, 001R, 001S, 001T		001
330A	NAS1096-2-4		. . SCREW BUY PN NAS1801-08-4 used on 001A, 001B, 001C, 001D, 001E, 001F, 001G, 001H, 001J, 001K, 001L, 001M, 001N, 001P, 001Q, 001R, 001S, 001T		001

- ITEM NOT ILLUSTRATED

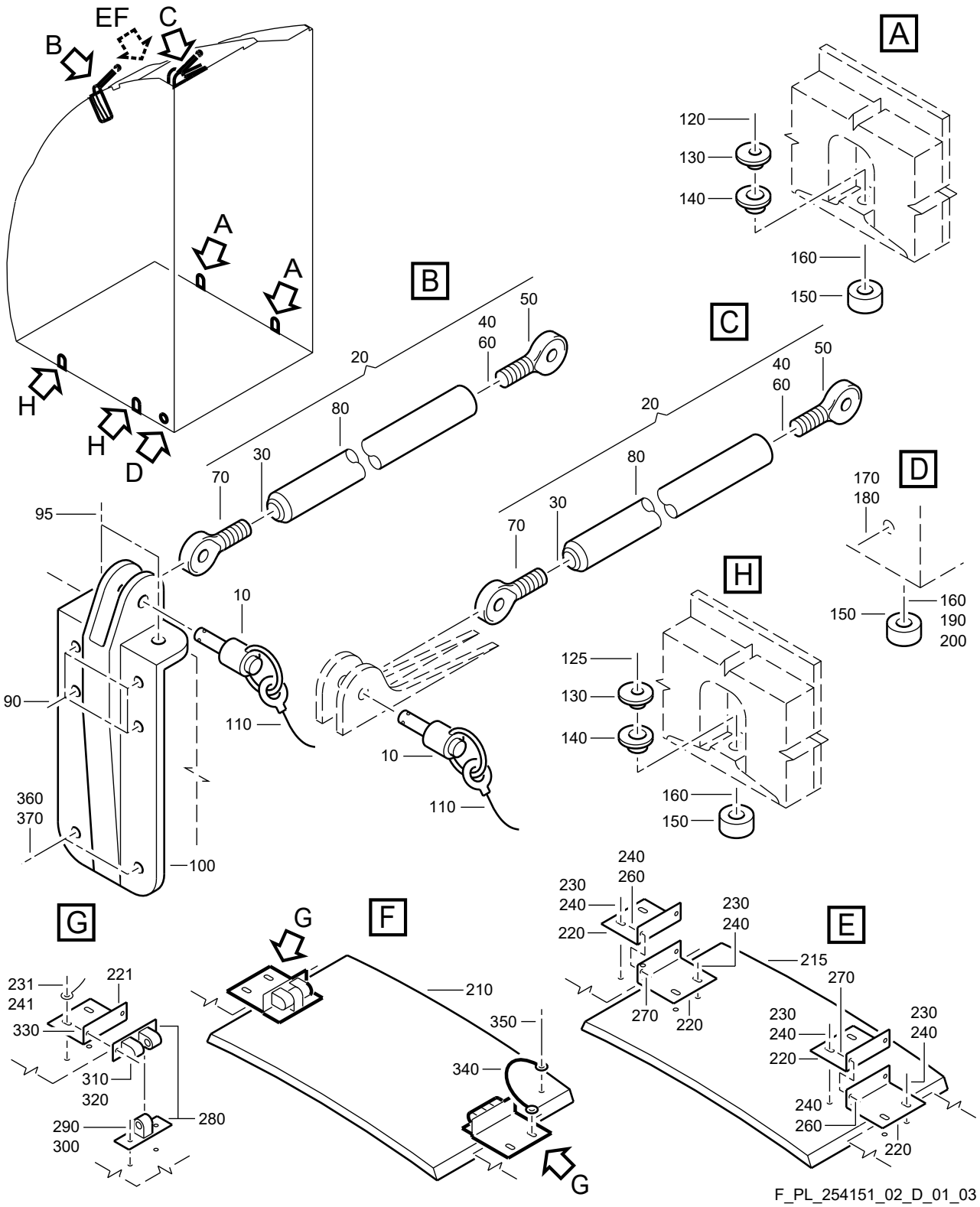

ATTACHMENT-LAVATORY
Figure 02D/EN254151SHEET02D01

FIG. ITEM	PART NUMBER	AIRLINE STOCK NUMBER	NOMENCLATURE 1234567	EFF CODE	UNITS PER ASSY
02D -001A	D2549030401061		. ATTACHMENT-LAVATORY NP PRE VSB A2-254-25-130 used on 010C (25415141V), 010C (25415141Y), 010C (25415142A), 010D (25415142P) SEE 25-41-51-41V FOR NHA SEE 25-41-51-41Y FOR NHA SEE 25-41-51-42A FOR NHA SEE 25-41-51-42P FOR NHA		RF

- ITEM NOT ILLUSTRATED

FIG. ITEM	PART NUMBER	AIRLINE STOCK NUMBER	NOMENCLATURE 1234567	EFF CODE	UNITS PER ASSY
-001B	D2549020705861		. ATTACHMENT-LAVATORY NP POST SB 25-1312 used on 010C (25415101A), 010D (25415101G), 010B (25415101L), 010D (25415101N), 010E (25415101U), 010H (25415101V), 010F (25415101W), 010D (25415101X), 010G(25415101Y), 010F (25415101Z), 010G (254151410), 010E(25415141A), 010D (25415141B), 010E (25415141C), 010H(25415141D), 010D (25415141F), 010F (25415141G), 010E(25415141H), 010D (25415141J), 010D (25415141L), 010E(25415141M), 010G (25415141N), 010D (25415141X) SEE 25-41-51-01A FOR NHA SEE 25-41-51-01G FOR NHA SEE 25-41-51-01L FOR NHA SEE 25-41-51-01N FOR NHA SEE 25-41-51-01U FOR NHA SEE 25-41-51-01V FOR NHA SEE 25-41-51-01W FOR NHA SEE 25-41-51-01X FOR NHA SEE 25-41-51-01Y FOR NHA SEE 25-41-51-01Z FOR NHA SEE 25-41-51-410 FOR NHA SEE 25-41-51-41A FOR NHA SEE 25-41-51-41B FOR NHA SEE 25-41-51-41C FOR NHA SEE 25-41-51-41D FOR NHA SEE 25-41-51-41F FOR NHA SEE 25-41-51-41G FOR NHA SEE 25-41-51-41H FOR NHA SEE 25-41-51-41J FOR NHA SEE 25-41-51-41L FOR NHA SEE 25-41-51-41M FOR NHA		RF

- ITEM NOT ILLUSTRATED

FIG. ITEM	PART NUMBER	AIRLINE STOCK NUMBER	NOMENCLATURE 1234567	EFF CODE	UNITS PER ASSY
			SEE 25-41-51-41N FOR NHA SEE 25-41-51-41X FOR NHA		
-001C	D2549010610061		. ATTACHMENT-LAVATORY NP PRE VSB A2-254-25-013 POST SB 25-1312 POST SB 25-1289 used on 010B (25415101C), 010C (25415101H), 010D (25415101L), 010C (25415101T), 010H (254151410), 010H (25415141N), 010D (25415141P), 010E (25415141R), 010B(25415141U), 010D (25415141V), 010E (25415141W), 010E(25415141X), 010D (25415141Y) SEE 25-41-51-01C FOR NHA SEE 25-41-51-01H FOR NHA SEE 25-41-51-01L FOR NHA SEE 25-41-51-01T FOR NHA SEE 25-41-51-410 FOR NHA SEE 25-41-51-41N FOR NHA SEE 25-41-51-41P FOR NHA SEE 25-41-51-41R FOR NHA SEE 25-41-51-41U FOR NHA SEE 25-41-51-41V FOR NHA SEE 25-41-51-41W FOR NHA SEE 25-41-51-41X FOR NHA SEE 25-41-51-41Y FOR NHA		RF

- ITEM NOT ILLUSTRATED

FIG. ITEM	PART NUMBER	AIRLINE STOCK NUMBER	NOMENCLATURE 1234567	EFF CODE	UNITS PER ASSY
-001D	D2549020610061		. ATTACHMENT-LAVATORY NP used on 010C (254151010), 010C (25415101B), 010C(25415101C), 010C (25415101F), 010D (25415101H), 010C(25415101J), 010E (25415101K), 010C (25415101L), 010C(25415101M), 010D (25415101P), 010F (25415101Q), 010E(25415101S), 010D (25415101T), 010F (25415101U), 010E(25415101V), 010G (25415101W), 010F (254151410), 010C(25415141T) SEE 25-41-51-010 FOR NHA SEE 25-41-51-01B FOR NHA SEE 25-41-51-01C FOR NHA SEE 25-41-51-01F FOR NHA SEE 25-41-51-01H FOR NHA SEE 25-41-51-01J FOR NHA SEE 25-41-51-01K FOR NHA SEE 25-41-51-01L FOR NHA SEE 25-41-51-01M FOR NHA SEE 25-41-51-01P FOR NHA SEE 25-41-51-01Q FOR NHA SEE 25-41-51-01S FOR NHA SEE 25-41-51-01T FOR NHA SEE 25-41-51-01U FOR NHA SEE 25-41-51-01V FOR NHA SEE 25-41-51-01W FOR NHA SEE 25-41-51-410 FOR NHA SEE 25-41-51-41T FOR NHA		RF
-001E	D2549030410861		. ATTACHMENT-LAVATORY NP used on 010D (25415142K), 010D (25415142L), 010B (25415142R), 010D (25415142T) SEE 25-41-51-42K FOR NHA SEE 25-41-51-42L FOR NHA SEE 25-41-51-42R FOR NHA SEE 25-41-51-42T FOR NHA		RF

- ITEM NOT ILLUSTRATED

FIG. ITEM	PART NUMBER	AIRLINE STOCK NUMBER	NOMENCLATURE 1234567		EFF CODE	UNITS PER ASSY
-001F	D2549010613661		. ATTACHMENT-LAVATORY PRE VSB A2-254-25-106 used on 010D (25415142B), 010B (25415142P), 010A (25415142Q), 010C (25415142R), 010A (25415142S), 010A(25415142T), 010A (25415142U) SEE 25-41-51-42B FOR NHA SEE 25-41-51-42P FOR NHA SEE 25-41-51-42Q FOR NHA SEE 25-41-51-42R FOR NHA SEE 25-41-51-42S FOR NHA SEE 25-41-51-42T FOR NHA SEE 25-41-51-42U FOR NHA	NP		RF
-001G	D2549030413461		. ATTACHMENT-LAVATORY used on 010E (25415142N), 010E (25415142S), 010E (25415142T) SEE 25-41-51-42N FOR NHA SEE 25-41-51-42S FOR NHA SEE 25-41-51-42T FOR NHA	NP		RF
-001H	D2549030414661		. ATTACHMENT-LAVATORY used on 010F (25415142N), 010D (25415142S) SEE 25-41-51-42N FOR NHA SEE 25-41-51-42S FOR NHA	NP		RF
-001J	D2549020411261		. ATTACHMENT-LAVATORY used on 010D (25415142Q) SEE 25-41-51-42Q FOR NHA	NP		RF
-001K	D2549030702061		. ATTACHMENT-LAVATORY used on 010E (25415142R) SEE 25-41-51-42R FOR NHA	NP		RF

- ITEM NOT ILLUSTRATED

FIG. ITEM	PART NUMBER	AIRLINE STOCK NUMBER	NOMENCLATURE 1234567		EFF CODE	UNITS PER ASSY
-001L	D2549030703061		. ATTACHMENT-LAVATORY used on 010C (25415142U) SEE 25-41-51-42U FOR NHA	NP		RF
-001M	D2549030703261		. ATTACHMENT-LAVATORY used on 010D (25415142U) SEE 25-41-51-42U FOR NHA	NP		RF
-001N	D2549020610061		. ATTACHMENT-LAVATORY used on 010E (25415101P) SEE 25-41-51-01P FOR NHA	NP		RF
-001P	D2547160007461		. ATTACHMENT-LAVTORYY POST SB 25-1640 used on 010F (25415101H), 010F (25415101L) SEE 25-41-51-01H FOR NHA SEE 25-41-51-01L FOR NHA	NP		RF
-001Q	D2547160007061		. ATTACHMENT-LAVATORY POST SB 25-1640 used on 010E (25415141F), 010F (25415141H) SEE 25-41-51-41F FOR NHA SEE 25-41-51-41H FOR NHA	NP		RF
-001R	D2547161202861		. ATTACHMENT-LAVATORY POST SB 25-1674 used on 010F (25415141M), 010G (25415142N) SEE 25-41-51-41M FOR NHA SEE 25-41-51-42N FOR NHA	NP		RF
-001S	D2549010610061		. ATTACHMENT-LAVATORY POST VSB A2-254-25-013 used on 010F (25415141P) SEE 25-41-51-41P FOR NHA	NP		RF

- ITEM NOT ILLUSTRATED

FIG. ITEM	PART NUMBER	AIRLINE STOCK NUMBER	NOMENCLATURE 1234567	EFF CODE	UNITS PER ASSY
-001T	R22540168900661		. ATTACHMENT-LAVATORY NP POST VSB A2-254-25-106 used on 010F (25415142T) SEE 25-41-51-42T FOR NHA		RF
-001U	R22540119607061		. ATTACHMENT-LAVATORY NP POST VSB A2-254-25-130 used on 010E (25415142P) SEE 25-41-51-42P FOR NHA		RF
010A	MS17987C409		. . PIN-QUICK RELEASE used on 001A, 001B, 001C, 001D, 001E, 001F, 001G, 001H, 001J, 001K, 001L, 001M, 001N, 001P, 001Q, 001R, 001S, 001T, 001U		002
020A	A225400238-056		. . STRUT ASSY used on 001A, 001B, 001C, 001E, 001F, 001G, 001H, 001J, 001K, 001L, 001M, 001Q, 001R, 001S, 001T, 001U		002
-020B	A225400238-000		. . STRUT ASSY used on 001D, 001N, 001P		002
030A	NAS509L5		. . . NUT used on 020A, 020B		001
040A	NAS513-5		. . . WASHER used on 020A, 020B		001
050A	NSA8140-06RK		. . . ROD END used on 020A		001
-050B	NSA8140-04RK		. . . ROD END used on 020B		001
060A	NAS509-6		. . . NUT used on 020A		001

- ITEM NOT ILLUSTRATED

FIG. ITEM	PART NUMBER	AIRLINE STOCK NUMBER	NOMENCLATURE 1234567	EFF CODE	UNITS PER ASSY
-060B	NAS509-5		. . . NUT used on 020B		001
070A	NSA8140-04LK		. . . ROD END used on 020A, 020B		001
080A	A225400238-254		. . . STRUT used on 020A		001
-080B	A225400238-200		. . . STRUT used on 020B		001
090A	NAS1304-2		. . BOLT BUY PN NAS6604-2 used on 001A, 001B, 001C, 001D, 001E, 001F, 001G, 001H, 001J, 001K, 001L, 001M, 001N, 001T, 001U		004
-090B	NAS6604-2		. . BOLT POST SB 25-1640 POST SB 25-1674 used on 001P, 001Q, 001R		004
095A	NAS1304-2		. . BOLT BUY PN NAS6604-2 used on 001A, 001C, 001D, 001E, 001F, 001G, 001H, 001J, 001K, 001L, 001M, 001N, 001T, 001U		002
-095B	NAS6604-2		. . BOLT POST SB 25-1640 POST SB 25-1674 used on 001P, 001Q, 001R		002
100A	A225401239-204		. . FITTING POST SB 25-1289 used on 001A, 001C, 001N, 001S, 001U		001

- ITEM NOT ILLUSTRATED

FIG. ITEM	PART NUMBER	AIRLINE STOCK NUMBER	NOMENCLATURE 1234567	EFF CODE	UNITS PER ASSY
-100B	A225401239-200		. . FITTING used on 001B, 001D		001
-100C	A225401239-002		. . FITTING ASSY POST SB 25-1640 POST SB 25-1674 used on 001E, 001F, 001G, 001H, 001J, 001K, 001L, 001M, 001P, 001Q, 001R, 001T		001
110A	DAN80A2-200		. . LANYARD used on 001A, 001B, 001C, 001D, 001E, 001F, 001G, 001H, 001J, 001K, 001L, 001M, 001N, 001P, 001Q, 001R, 001S, 001T, 001U		002
120A	NAS1304-31		. . BOLT BUY PN NAS6604-31 used on 001A, 001B, 001C, 001D, 001E, 001F, 001G, 001H, 001J, 001K, 001L, 001M, 001N, 001P, 001Q, 001R, 001S, 001T, 001U		002
125A	NAS1304-31		. . BOLT BUY PN NAS6604-31 used on 001A, 001B, 001C, 001D, 001E, 001F, 001G, 001H, 001J, 001K, 001L, 001M, 001N, 001S, 001T, 001U		002
-125B	NAS6604-31		. . BOLT POST SB 25-1640 POST SB 25-1674 used on 001P, 001Q, 001R		002

- ITEM NOT ILLUSTRATED

FIG. ITEM	PART NUMBER	AIRLINE STOCK NUMBER	NOMENCLATURE 1234567	EFF CODE	UNITS PER ASSY
130A	A225400207-204		. . BUSHING used on 001A, 001B, 001C, 001D, 001E, 001F, 001G, 001H, 001J, 001K, 001L, 001M, 001N, 001P, 001Q, 001R, 001S, 001T, 001U		004
140A	A225400207-206		. . BUSHING used on 001A, 001B, 001C, 001D, 001E, 001F, 001G, 001H, 001J, 001K, 001L, 001M, 001N, 001P, 001Q, 001R, 001S, 001T, 001U		004
150A	A225400207-200		. . BUSHING used on 001A, 001B, 001C, 001D, 001E, 001F, 001G, 001H, 001J, 001K, 001L, 001M, 001N, 001P, 001Q, 001R, 001S, 001T, 001U		005
160A	NAS1611-209		. . PACKING BUY PN EN6075-209 used on 001A, 001B, 001C, 001D, 001E, 001F, 001G, 001H, 001J, 001K, 001L, 001M, 001N, 001P, 001Q, 001R, 001S, 001T, 001U		005
170A	NAS577B4A		. . NUT used on 001A, 001B, 001C, 001D, 001E, 001F, 001G, 001H, 001J, 001K, 001L, 001M, 001N, 001P, 001Q, 001R, 001S, 001T, 001U		001

- ITEM NOT ILLUSTRATED

FIG. ITEM	PART NUMBER	AIRLINE STOCK NUMBER	NOMENCLATURE 1234567	EFF CODE	UNITS PER ASSY
180A	NAS578-4A		. . RETAINER used on 001A, 001B, 001C, 001D, 001E, 001F, 001G, 001H, 001J, 001K, 001L, 001M, 001N, 001P, 001Q, 001R, 001S, 001T, 001U		001
190A	NAS1304-22		. . BOLT BUY PN NAS6604-22 used on 001A, 001B, 001C, 001D, 001E, 001F, 001G, 001H, 001J, 001K, 001L, 001M, 001N, 001R, 001S, 001T, 001U		001
-190B	NAS6604-22		. . BOLT POST SB 25-1640 used on 001P, 001Q		001
200A	NAS1149C0463R		. . WASHER used on 001A, 001B, 001C, 001D, 001E, 001F, 001G, 001H, 001J, 001K, 001L, 001M, 001N, 001P, 001Q, 001R, 001S, 001T, 001U		001
210A	A225401243-550		. . FLAP PRE VSB A2-254-25-106 used on 001F		001
-210B	A225401243-600		. . FLAP POST SB 25-1312 used on 001B, 001C, 001D, 001N, 001P, 001Q, 001S		001
-210C	A225401243-566		. . FLAP used on 001E		001
-210D	A225401243-500		. . FLAP used on 001L		001

- ITEM NOT ILLUSTRATED

FIG. ITEM	PART NUMBER	AIRLINE STOCK NUMBER	NOMENCLATURE 1234567	EFF CODE	UNITS PER ASSY
-210E	A225401243-568		. . FLAP used on 001G		001
-210F	A225401243-570		. . FLAP used on 001H		001
-210G	A225401243-572		. . FLAP used on 001J		001
-210H	A225401243-574		. . FLAP used on 001K		001
-210J	A225401243-564		. . FLAP POST VSB A2-254-25-130 POST SB 25-1674 used on 001M, 001R, 001U		001
-210K	A225401243-582		. . FLAP POST VSB A2-254-25-106 used on 001T		001
215A	A225401243-550		. . FLAP PRE VSB A2-254-25-130 used on 001A		001
220A	A225401244-202		. . ANGLE used on 001A, 001U		004
221A	A225401244-202		. . ANGLE used on 001B, 001C, 001D, 001E, 001F, 001G, 001H, 001J, 001K, 001L, 001M, 001N, 001P, 001Q, 001R, 001S, 001T		002
230A	NAS1096-2-5		. . SCREW BUY PN NAS1801-08-5 used on 001A, 001U		004

- ITEM NOT ILLUSTRATED

FIG. ITEM	PART NUMBER	AIRLINE STOCK NUMBER	NOMENCLATURE 1234567	EFF CODE	UNITS PER ASSY
231A	NAS1096-2-5		. . SCREW BUY PN NAS1801-08-5 used on 001B, 001C, 001D, 001E, 001F, 001G, 001H, 001J, 001K, 001L, 001M, 001N, 001P, 001Q, 001R, 001S, 001T		004
240A	NAS1149CN832R		. . WASHER used on 001A, 001U		006
241A	NAS1149CN832R		. . WASHER used on 001B, 001C, 001D, 001E, 001F, 001G, 001H, 001J, 001K, 001L, 001M, 001N, 001P, 001Q, 001R, 001S, 001T		004
-250A	NSA5420-410		. . RIVET used on 001A, 001U		004
260A	NAS1096-2-6		. . SCREW BUY PN NAS1801-08-6 used on 001A, 001U		002
270A	MS21042-08		. . NUT used on 001A, 001U		002
280A	244-20-102		. . CATCH-DOUBLE SPRING BALL used on 001B, 001C, 001D, 001E, 001F, 001G, 001H, 001J, 001K, 001L, 001M, 001N, 001P, 001Q, 001R, 001S, 001T		002
290A	NAS1102-06-4		. . SCREW used on 001B, 001C, 001D, 001E, 001F, 001G, 001H, 001J, 001K, 001L, 001M, 001N, 001P, 001Q, 001R, 001S, 001T		004

- ITEM NOT ILLUSTRATED

FIG. ITEM	PART NUMBER	AIRLINE STOCK NUMBER	NOMENCLATURE 1234567	EFF CODE	UNITS PER ASSY
300A	NAS1149CN632R		. . WASHER used on 001B, 001C, 001D, 001E, 001F, 001G, 001H, 001J, 001K, 001L, 001M, 001N, 001P, 001Q, 001R, 001S, 001T		004
310A	NAS1102-04-6		. . SCREW used on 001B, 001C, 001D, 001E, 001F, 001G, 001H, 001J, 001K, 001L, 001M, 001N, 001P, 001Q, 001R, 001S, 001T		004
320A	NAS1149CN432R		. . WASHER used on 001B, 001C, 001D, 001E, 001F, 001G, 001H, 001J, 001K, 001L, 001M, 001N, 001P, 001Q, 001R, 001S, 001T		004
330A	MS21042-04		. . NUT used on 001B, 001C, 001D, 001E, 001F, 001G, 001H, 001J, 001K, 001L, 001M, 001N, 001P, 001Q, 001R, 001S, 001T		004
340A	DAN80A3-100		. . LANYARD used on 001B, 001C, 001D, 001E, 001F, 001G, 001H, 001J, 001K, 001L, 001M, 001N, 001P, 001Q, 001R, 001S, 001T		001
350A	NAS1096-2-4		. . SCREW BUY PN NAS1801-08-4 used on 001B, 001C, 001D, 001E, 001F, 001G, 001H, 001J, 001K, 001L, 001M, 001N, 001P, 001Q, 001R, 001S, 001T		001

- ITEM NOT ILLUSTRATED

FIG. ITEM	PART NUMBER	AIRLINE STOCK NUMBER	NOMENCLATURE 1234567	EFF CODE	UNITS PER ASSY
360A	NAS1096-3-7		. . SCREW BUY PN NAS1801-3-7 used on 001B, 001D, 001P, 001Q, 001R		002
362A	NAS1801-3-7		. . SCREW used on 001S		002
364A	NAS6604-2		. . SCREW used on 001S		004
370A	NAS1149C0332R		. . WASHER used on 001B, 001D, 001P, 001Q, 001R		002
-370B	NAS1149C0332R		. . WASHER used on 001S		006

- ITEM NOT ILLUSTRATED

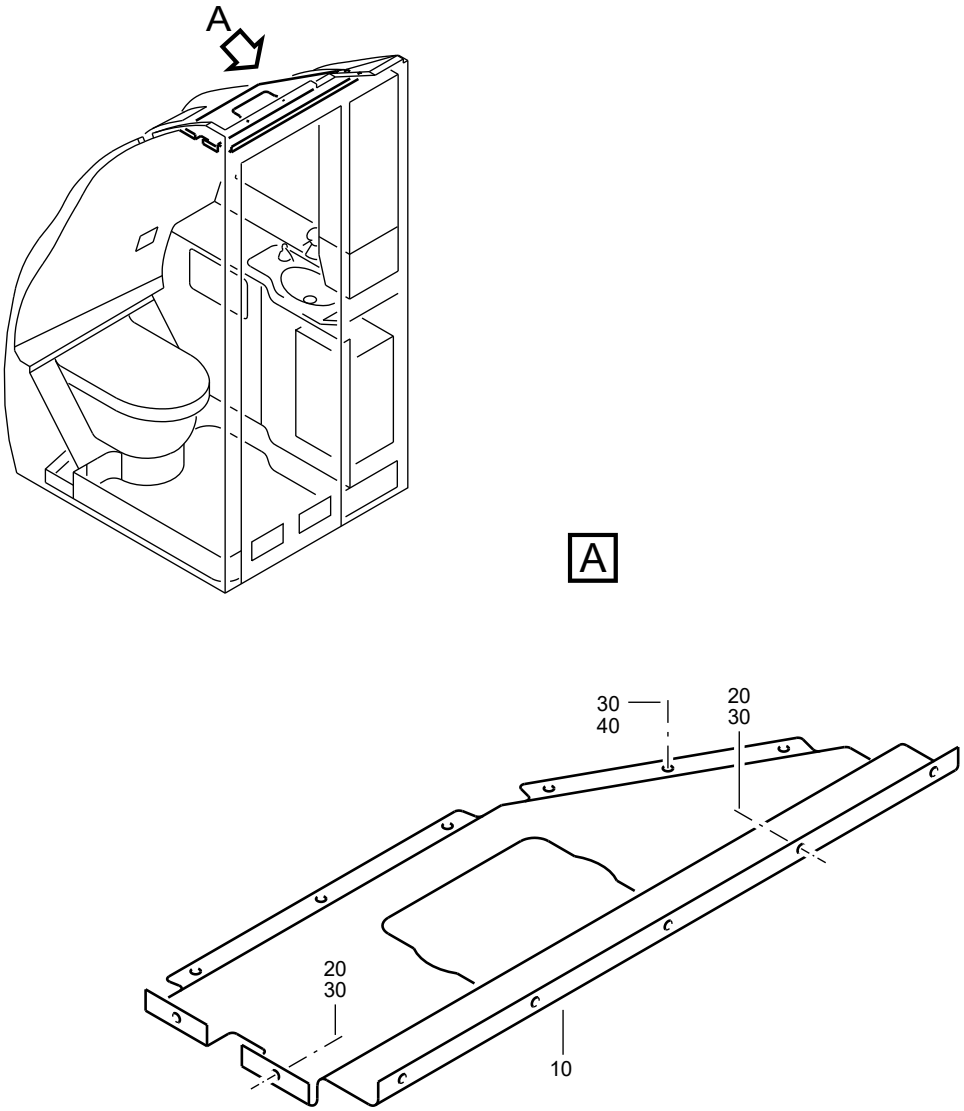

F_PL_254151_04_0_01_00

PANEL-CEILING
Figure 4/EN254151SHEET04001

FIG. ITEM	PART NUMBER	AIRLINE STOCK NUMBER	NOMENCLATURE 1234567	EFF CODE	UNITS PER ASSY
04					
-001A	D2549010500063		. PANEL-CEILING NP used on 020A (254151010), 020A (25415101A), 020A(25415101B), 020A (25415101C), 020A (25415101D), 020A(25415101E), 020A (25415101F), 020A (25415101G), 020B(25415101H), 020D (25415101K), 020B (25415101L), 020C(25415101M), 020D (25415101N), 020C (25415141T) SEE 25-41-51-010 FOR NHA SEE 25-41-51-01A FOR NHA SEE 25-41-51-01B FOR NHA SEE 25-41-51-01C FOR NHA SEE 25-41-51-01D FOR NHA SEE 25-41-51-01E FOR NHA SEE 25-41-51-01F FOR NHA SEE 25-41-51-01G FOR NHA SEE 25-41-51-01H FOR NHA SEE 25-41-51-01K FOR NHA SEE 25-41-51-01L FOR NHA SEE 25-41-51-01M FOR NHA SEE 25-41-51-01N FOR NHA SEE 25-41-51-41T FOR NHA		RF
-001B	D2549020500063		. PANEL-CEILING NP used on 020B (254151010), 020B (25415101A), 020B(25415101B), 020B (25415101D), 020B (25415101E), 020B(25415101F) SEE 25-41-51-010 FOR NHA SEE 25-41-51-01A FOR NHA SEE 25-41-51-01B FOR NHA SEE 25-41-51-01D FOR NHA SEE 25-41-51-01E FOR NHA SEE 25-41-51-01F FOR NHA		RF

- ITEM NOT ILLUSTRATED

FIG. ITEM	PART NUMBER	AIRLINE STOCK NUMBER	NOMENCLATURE 1234567	EFF CODE	UNITS PER ASSY
-001C	D2549020600463		. PANEL-CEILING NP used on 020C (254151410) SEE 25-41-51-410 FOR NHA		RF

- ITEM NOT ILLUSTRATED

FIG. ITEM	PART NUMBER	AIRLINE STOCK NUMBER	NOMENCLATURE 1234567	EFF CODE	UNITS PER ASSY
-001D	D2549020602663		. PANEL-CEILING NP PRE VSB A2-254-25-130 used on 020B (25415101G), 020A (25415101H), 020A (25415101J), 020B (25415101K), 020A (25415101L), 020A (25415101M), 020A (25415101N), 020B (25415101P), 020C(25415101Q), 020A (25415101R), 020B (25415101S), 020A(25415101T), 020A (25415101U), 020A (25415101V), 020A(25415101W), 020A (25415101X), 020A (25415101Y), 020A(25415101Z), 020A (254151410), 020A (25415141A), 020B(25415141B), 020A (25415141C), 020A (25415141D), 020A(25415141E), 020C (25415141F), 020C (25415141G), 020A(25415141H), 020A (25415141J), 020A (25415141K), 020A(25415141L), 020A (25415141M), 020B (25415141N), 020A(25415141P), 020A (25415141Q), 020B (25415141R), 020A(25415141S), 020A (25415141T), 020A (25415141U), 020A(25415141V), 020A (25415141W), 020A (25415141X), 020A(25415141Y), 020A (254151420) SEE 25-41-51-01G FOR NHA SEE 25-41-51-01H FOR NHA SEE 25-41-51-01J FOR NHA SEE 25-41-51-01K FOR NHA SEE 25-41-51-01L FOR NHA SEE 25-41-51-01M FOR NHA SEE 25-41-51-01N FOR NHA SEE 25-41-51-01P FOR NHA		RF

- ITEM NOT ILLUSTRATED

FIG. ITEM	PART NUMBER	AIRLINE STOCK NUMBER	NOMENCLATURE 1234567	EFF CODE	UNITS PER ASSY
			SEE 25-41-51-01Q FOR NHA SEE 25-41-51-01R FOR NHA SEE 25-41-51-01S FOR NHA SEE 25-41-51-01T FOR NHA SEE 25-41-51-01U FOR NHA SEE 25-41-51-01V FOR NHA SEE 25-41-51-01W FOR NHA SEE 25-41-51-01X FOR NHA SEE 25-41-51-01Y FOR NHA SEE 25-41-51-01Z FOR NHA SEE 25-41-51-410 FOR NHA SEE 25-41-51-41A FOR NHA SEE 25-41-51-41B FOR NHA SEE 25-41-51-41C FOR NHA SEE 25-41-51-41D FOR NHA SEE 25-41-51-41E FOR NHA SEE 25-41-51-41F FOR NHA SEE 25-41-51-41G FOR NHA SEE 25-41-51-41H FOR NHA SEE 25-41-51-41J FOR NHA SEE 25-41-51-41K FOR NHA SEE 25-41-51-41L FOR NHA SEE 25-41-51-41M FOR NHA SEE 25-41-51-41N FOR NHA SEE 25-41-51-41P FOR NHA SEE 25-41-51-41Q FOR NHA SEE 25-41-51-41R FOR NHA SEE 25-41-51-41S FOR NHA SEE 25-41-51-41T FOR NHA SEE 25-41-51-41U FOR NHA SEE 25-41-51-41V FOR NHA SEE 25-41-51-41W FOR NHA SEE 25-41-51-41X FOR NHA SEE 25-41-51-41Y FOR NHA SEE 25-41-51-420 FOR NHA		

- ITEM NOT ILLUSTRATED

FIG. ITEM	PART NUMBER	AIRLINE STOCK NUMBER	NOMENCLATURE 1234567	EFF CODE	UNITS PER ASSY
-001E	D2549020602863		. PANEL-CEILING NP used on 020C (25415101G), 020B (25415101J), 020C (25415101K), 020B (25415101M), 020A (25415101P), 020B(25415101Q), 020B (25415101T), 020D (25415101V), 020D(25415101W), 020B (25415101Y), 020D (25415141B), 020D(25415141D), 020D (25415141G), 020C (25415141H), 020B(25415141K), 020B (25415141M), 020C (25415141N), 020B(25415141T), 020D (25415141W) SEE 25-41-51-01G FOR NHA SEE 25-41-51-01J FOR NHA SEE 25-41-51-01K FOR NHA SEE 25-41-51-01M FOR NHA SEE 25-41-51-01P FOR NHA SEE 25-41-51-01Q FOR NHA SEE 25-41-51-01T FOR NHA SEE 25-41-51-01V FOR NHA SEE 25-41-51-01W FOR NHA SEE 25-41-51-01Y FOR NHA SEE 25-41-51-41B FOR NHA SEE 25-41-51-41D FOR NHA SEE 25-41-51-41G FOR NHA SEE 25-41-51-41H FOR NHA SEE 25-41-51-41K FOR NHA SEE 25-41-51-41M FOR NHA SEE 25-41-51-41N FOR NHA SEE 25-41-51-41T FOR NHA SEE 25-41-51-41W FOR NHA		RF

- ITEM NOT ILLUSTRATED

FIG. ITEM	PART NUMBER	AIRLINE STOCK NUMBER	NOMENCLATURE 1234567	EFF CODE	UNITS PER ASSY
-001F	D2549030505663		. PANEL-CEILING NP used on 020A (25415101K), 020C (25415101P), 020C (25415101X), 020E (25415101Y), 020A (25415141G), 020E (25415141N), 020A (25415141R) SEE 25-41-51-01K FOR NHA SEE 25-41-51-01P FOR NHA SEE 25-41-51-01X FOR NHA SEE 25-41-51-01Y FOR NHA SEE 25-41-51-41G FOR NHA SEE 25-41-51-41N FOR NHA SEE 25-41-51-41R FOR NHA		RF
-001G	D2549030506063		. PANEL-CEILING NP used on 020A (25415101Q), 020C (25415101V), 020B (25415101W), 020C (25415101Z), 020C (25415141B), 020B(25415141D), 020B (25415141G), 020C (25415141M), 020A(25415141N), 020C (25415141W) SEE 25-41-51-01Q FOR NHA SEE 25-41-51-01V FOR NHA SEE 25-41-51-01W FOR NHA SEE 25-41-51-01Z FOR NHA SEE 25-41-51-41B FOR NHA SEE 25-41-51-41D FOR NHA SEE 25-41-51-41G FOR NHA SEE 25-41-51-41M FOR NHA SEE 25-41-51-41N FOR NHA SEE 25-41-51-41W FOR NHA		RF

- ITEM NOT ILLUSTRATED

FIG. ITEM	PART NUMBER	AIRLINE STOCK NUMBER	NOMENCLATURE 1234567	EFF CODE	UNITS PER ASSY
-001H	D2549020610263		. PANEL-CEILING NP used on 020B (25415101N), 020A (25415101S), 020C (25415101W), 020C (25415101Y), 020B (254151410), 020E(25415141G), 020B (25415141P), 020B (25415141Z) SEE 25-41-51-01N FOR NHA SEE 25-41-51-01S FOR NHA SEE 25-41-51-01W FOR NHA SEE 25-41-51-01Y FOR NHA SEE 25-41-51-410 FOR NHA SEE 25-41-51-41G FOR NHA SEE 25-41-51-41P FOR NHA SEE 25-41-51-41Z FOR NHA		RF
-001J	D2549010513863		. PANEL-CEILING NP used on 020D (25415101Q), 020C (25415101S), 020B (25415101U), 020B (25415101V), 020B (25415101Z), 020C (25415141A), 020A (25415141B), 020C (25415141D), 020B (25415141F), 020B (25415141H), 020C (25415141J), 020B (25415141L) SEE 25-41-51-01Q FOR NHA SEE 25-41-51-01S FOR NHA SEE 25-41-51-01U FOR NHA SEE 25-41-51-01V FOR NHA SEE 25-41-51-01Z FOR NHA SEE 25-41-51-41A FOR NHA SEE 25-41-51-41B FOR NHA SEE 25-41-51-41D FOR NHA SEE 25-41-51-41F FOR NHA SEE 25-41-51-41H FOR NHA SEE 25-41-51-41J FOR NHA SEE 25-41-51-41L FOR NHA		RF

- ITEM NOT ILLUSTRATED

FIG. ITEM	PART NUMBER	AIRLINE STOCK NUMBER	NOMENCLATURE 1234567	EFF CODE	UNITS PER ASSY
-001K	D2549030507263		. PANEL-CEILING NP used on 020C (25415101N), 020E (25415101Q), 020C (25415101U), 020B (25415101X), 020D (25415101Y), 020B (25415141C), 020A (25415141F), 020D (25415141H), 020D (25415141N), 020B (25415141W) SEE 25-41-51-01N FOR NHA SEE 25-41-51-01Q FOR NHA SEE 25-41-51-01U FOR NHA SEE 25-41-51-01X FOR NHA SEE 25-41-51-01Y FOR NHA SEE 25-41-51-41C FOR NHA SEE 25-41-51-41F FOR NHA SEE 25-41-51-41H FOR NHA SEE 25-41-51-41N FOR NHA SEE 25-41-51-41W FOR NHA		RF
-001L	D2549020710063		. PANEL-CEILING NP used on 020B (25415141A), 020B (25415141J), 020C(25415141R), 020B (25415141V), 020C (25415141Y) SEE 25-41-51-41A FOR NHA SEE 25-41-51-41J FOR NHA SEE 25-41-51-41R FOR NHA SEE 25-41-51-41V FOR NHA SEE 25-41-51-41Y FOR NHA		RF

- ITEM NOT ILLUSTRATED

FIG. ITEM	PART NUMBER	AIRLINE STOCK NUMBER	NOMENCLATURE 1234567	EFF CODE	UNITS PER ASSY
-001M	D2549030401463		. PANEL-CEILING NP PRE VSB A2-254-25-106 PRE VSB A2-254-25-130 POST SB 25-1640 used on 020C (25415101H), 020C (25415101L), 020D (25415141F), 020E (25415141H), 020C (25415141V), 020D (25415141X), 020B (25415141Y), 020A (25415141Z), 020C (254151420), 020A (25415142A), 020A (25415142B), 020A (25415142C), 020A (25415142D), 020B (25415142E), 020A(25415142F), 020A (25415142G), 020B (25415142H), 020A(25415142J), 020A (25415142K), 020A (25415142L), 020A(25415142M), 020A (25415142N), 020A (25415142P), 020A(25415142Q), 020D (25415142R), 020A (25415142S), 020C(25415142T), 020B (25415142U) SEE 25-41-51-01H FOR NHA SEE 25-41-51-01L FOR NHA SEE 25-41-51-41F FOR NHA SEE 25-41-51-41H FOR NHA SEE 25-41-51-41V FOR NHA SEE 25-41-51-41X FOR NHA SEE 25-41-51-41Y FOR NHA SEE 25-41-51-41Z FOR NHA SEE 25-41-51-420 FOR NHA SEE 25-41-51-42A FOR NHA SEE 25-41-51-42B FOR NHA SEE 25-41-51-42C FOR NHA SEE 25-41-51-42D FOR NHA SEE 25-41-51-42E FOR NHA SEE 25-41-51-42F FOR NHA SEE 25-41-51-42G FOR NHA		RF

- ITEM NOT ILLUSTRATED

FIG. ITEM	PART NUMBER	AIRLINE STOCK NUMBER	NOMENCLATURE 1234567	EFF CODE	UNITS PER ASSY
			SEE 25-41-51-42H FOR NHA SEE 25-41-51-42J FOR NHA SEE 25-41-51-42K FOR NHA SEE 25-41-51-42L FOR NHA SEE 25-41-51-42M FOR NHA SEE 25-41-51-42N FOR NHA SEE 25-41-51-42P FOR NHA SEE 25-41-51-42Q FOR NHA SEE 25-41-51-42R FOR NHA SEE 25-41-51-42S FOR NHA SEE 25-41-51-42T FOR NHA SEE 25-41-51-42U FOR NHA		
-001N	R22540166200063		. PANEL-CEILING NP POST VSB A2-254-25-106 used on 020B (25415142C), 020E (25415142G), 020D (25415142L), 020F (25415142T) SEE 25-41-51-42C FOR NHA SEE 25-41-51-42G FOR NHA SEE 25-41-51-42L FOR NHA SEE 25-41-51-42T FOR NHA		RF

- ITEM NOT ILLUSTRATED

FIG. ITEM	PART NUMBER	AIRLINE STOCK NUMBER	NOMENCLATURE 1234567	EFF CODE	UNITS PER ASSY
-001P	R22540119604663		. PANEL-CEILING NP POST VSB A2-254-25-130 used on 020D (254151410), 020C (25415141K), 020F (25415141N), 020D (25415141R), 020E (25415141W), 020E (25415141X), 020E (254151420), 020D (25415142E), 020C (25415142J), 020C (25415142P) SEE 25-41-51-410 FOR NHA SEE 25-41-51-41K FOR NHA SEE 25-41-51-41N FOR NHA SEE 25-41-51-41R FOR NHA SEE 25-41-51-41W FOR NHA SEE 25-41-51-41X FOR NHA SEE 25-41-51-420 FOR NHA SEE 25-41-51-42E FOR NHA SEE 25-41-51-42J FOR NHA SEE 25-41-51-42P FOR NHA		RF
010A	A225401250-500		. . PANEL-CEILING,LAV A PRE VSB A2-254-25-130 used on 001A, 001D		001
-010B	A225401250-502		. . PANEL-CEILING,LAV A used on 001B, 001E		001
-010C	A225401250-506		. . PANEL-CEILING,LAV A used on 001C		001
-010D	A225401250-508		. . PANEL-CEILING,LAV A used on 001F		001
-010E	A225401250-510		. . PANEL-CEILING,LAV A used on 001G		001
-010F	A225401250-516		. . PANEL-CEILING,LAV A used on 001H		001
-010G	A225401250-512		. . PANEL-CEILING,LAV A used on 001J		001

- ITEM NOT ILLUSTRATED

FIG. ITEM	PART NUMBER	AIRLINE STOCK NUMBER	NOMENCLATURE 1234567	EFF CODE	UNITS PER ASSY
-010H	A225401250-514		. . PANEL-CEILING,LAV A used on 001K		001
-010J	A225401250-518		. . PANEL-CEILING,LAV A used on 001L		001
-010K	A225401251-500		. . CEILING ASSY PRE VSB A2-254-25-130 PRE VSB A2-254-25-106 POST SB 25-1640 used on 001M		001
-010L	A225401251-550		. . CEILING ASSY POST VSB A2-254-25-106 used on 001N		001
-010M	A225401251-602		. . CEILING ASSY POST VSB A2-254-25-130 used on 001P		001
020A	NAS1801-08-5		. . SCREW POST SB 25-1640 used on 001A, 001B, 001C, 001D, 001E, 001F, 001G, 001H, 001J, 001K, 001L, 001M, 001N, 001P		007
030A	AN960C8		. . WASHER BUY PN NAS1149CN832R used on 001A, 001B, 001C		013
-030B	NAS1149CN832R		. . WASHER used on 001D, 001E, 001F, 001G, 001H, 001J, 001K, 001L, 001M, 001N, 001P		013

- ITEM NOT ILLUSTRATED

FIG. ITEM	PART NUMBER	AIRLINE STOCK NUMBER	NOMENCLATURE 1234567	EFF CODE	UNITS PER ASSY
040A	NAS1801-08-4		. . SCREW POST SB 25-1640 used on 001A, 001B, 001C, 001D, 001E, 001F, 001G, 001H, 001J, 001K, 001L, 001M, 001N, 001P		006
-050A	MS21059-08		. . NUT NP POST VSB A2-254-25-130 used on 001P		002
-060A	DIN65399-2406G		. . RIVET NP POST VSB A2-254-25-130 used on 001P		004

- ITEM NOT ILLUSTRATED

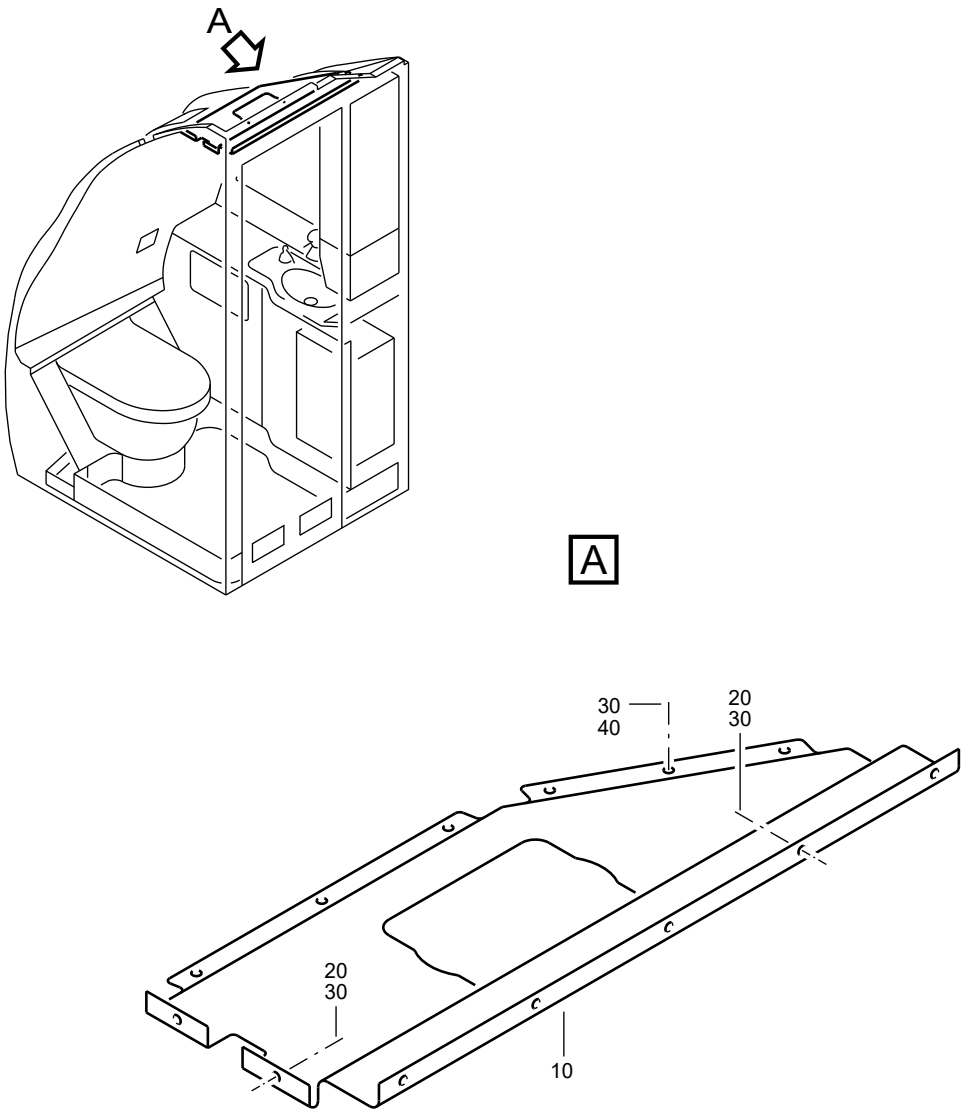

F_PL_254151_04_A_01_00

PANEL-CEILING
Figure 04A/EN254151SHEET04A01

FIG. ITEM	PART NUMBER	AIRLINE STOCK NUMBER	NOMENCLATURE 1234567	EFF CODE	UNITS PER ASSY
04A					
-001N	D2549030402263		. PANEL-CEILING NP used on 020B (25415141X), 020B (254151420) SEE 25-41-51-41X FOR NHA SEE 25-41-51-420 FOR NHA		RF
-001P	D2549030405263		. PANEL-CEILING NP used on 020C (25415141X), 020C (25415142E) SEE 25-41-51-41X FOR NHA SEE 25-41-51-42E FOR NHA		RF
-001Q	D2549010611463		. PANEL-CEILING NP used on 020D (254151420), 020B (25415142J) SEE 25-41-51-420 FOR NHA SEE 25-41-51-42J FOR NHA		RF
-001R	D2549030408263		. PANEL-CEILING NP used on 020B (25415142D), 020B (25415142L), 020C (25415142N), 020D (25415142S), 020E (25415142T) SEE 25-41-51-42D FOR NHA SEE 25-41-51-42L FOR NHA SEE 25-41-51-42N FOR NHA SEE 25-41-51-42S FOR NHA SEE 25-41-51-42T FOR NHA		RF
-001S	D2549020805263		. PANEL-CEILING NP used on 020A (25415142E), 020B (25415142K) SEE 25-41-51-42E FOR NHA SEE 25-41-51-42K FOR NHA		RF

- ITEM NOT ILLUSTRATED

FIG. ITEM	PART NUMBER	AIRLINE STOCK NUMBER	NOMENCLATURE 1234567	EFF CODE	UNITS PER ASSY
-001T	D2549030410263		. PANEL-CEILING NP used on 020B (25415142F), 020D (25415142G), 020A(25415142H), 020B (25415142R), 020B (25415142T) SEE 25-41-51-42F FOR NHA SEE 25-41-51-42G FOR NHA SEE 25-41-51-42H FOR NHA SEE 25-41-51-42R FOR NHA SEE 25-41-51-42T FOR NHA		RF
-001U	D2549030409663		. PANEL-CEILING NP used on 020D (25415141M), 020B (25415142G), 020B (25415142N), 020B (25415142Q), 020A (25415142R), 020B(25415142S), 020C (25415142U) SEE 25-41-51-41M FOR NHA SEE 25-41-51-42G FOR NHA SEE 25-41-51-42N FOR NHA SEE 25-41-51-42Q FOR NHA SEE 25-41-51-42R FOR NHA SEE 25-41-51-42S FOR NHA SEE 25-41-51-42U FOR NHA		RF

- ITEM NOT ILLUSTRATED

FIG. ITEM	PART NUMBER	AIRLINE STOCK NUMBER	NOMENCLATURE 1234567		EFF CODE	UNITS PER ASSY
-001V	D2549040500663		. PANEL-CEILING used on 020C (25415142G), 020C (25415142H), 020D (25415142K), 020B (25415142M), 020D (25415142N), 020B(25415142P), 020C (25415142Q), 020C (25415142R), 020C(25415142S), 020A (25415142T), 020A (25415142U) SEE 25-41-51-42G FOR NHA SEE 25-41-51-42H FOR NHA SEE 25-41-51-42K FOR NHA SEE 25-41-51-42M FOR NHA SEE 25-41-51-42N FOR NHA SEE 25-41-51-42P FOR NHA SEE 25-41-51-42Q FOR NHA SEE 25-41-51-42R FOR NHA SEE 25-41-51-42S FOR NHA SEE 25-41-51-42T FOR NHA SEE 25-41-51-42U FOR NHA	NP		RF
-001W	D2549030410863		. PANEL-CEILING used on 020C (25415142K), 020C (25415142L), 020D (25415142T) SEE 25-41-51-42K FOR NHA SEE 25-41-51-42L FOR NHA SEE 25-41-51-42T FOR NHA	NP		RF
-001X	D2549020411263		. PANEL-CEILING used on 020D (25415142Q) SEE 25-41-51-42Q FOR NHA	NP		RF
-001Y	D2549030702063		. PANEL-CEILING used on 020E (25415142R) SEE 25-41-51-42R FOR NHA	NP		RF
010L	A225401251-514		. . CEILING ASSY used on 001N			001

- ITEM NOT ILLUSTRATED

FIG. ITEM	PART NUMBER	AIRLINE STOCK NUMBER	NOMENCLATURE 1234567	EFF CODE	UNITS PER ASSY
-010M	A225401251-502		. . CEILING ASSY used on 001P		001
-010N	A225401251-508		. . CEILING ASSY used on 001Q		001
-010P	A225401251-520		. . CEILING ASSY used on 001R		001
-010Q	A225401251-518		. . CEILING ASSY used on 001S		001
-010R	A225401251-516		. . CEILING ASSY used on 001T		001
-010S	A225401251-602		. . CEILING ASSY POST SB 25-1674 used on 001U		001
-010T	A225401251-600		. . CEILING ASSY used on 001V		001
-010U	A225401251-604		. . CEILING ASSY used on 001W		001
-010V	A225401251-606		. . CEILING ASSY used on 001X		001
-010W	A225401251-608		. . CEILING ASSY used on 001Y		001
020A	NAS1801-08-5		. . SCREW POST SB 25-1640 used on 001N, 001P, 001Q, 001R, 001S, 001T, 001U, 001V, 001W, 001X, 001Y		007
030B	NAS1149CN832R		. . WASHER used on 001N, 001P, 001Q, 001R, 001S, 001T, 001U, 001V, 001W, 001X, 001Y		013

- ITEM NOT ILLUSTRATED

FIG. ITEM	PART NUMBER	AIRLINE STOCK NUMBER	NOMENCLATURE 1234567	EFF CODE	UNITS PER ASSY
040A	NAS1801-08-4		. . SCREW POST SB 25-1640 used on 001N, 001P, 001Q, 001R, 001S, 001T, 001U, 001V, 001W, 001X, 001Y		006

- ITEM NOT ILLUSTRATED

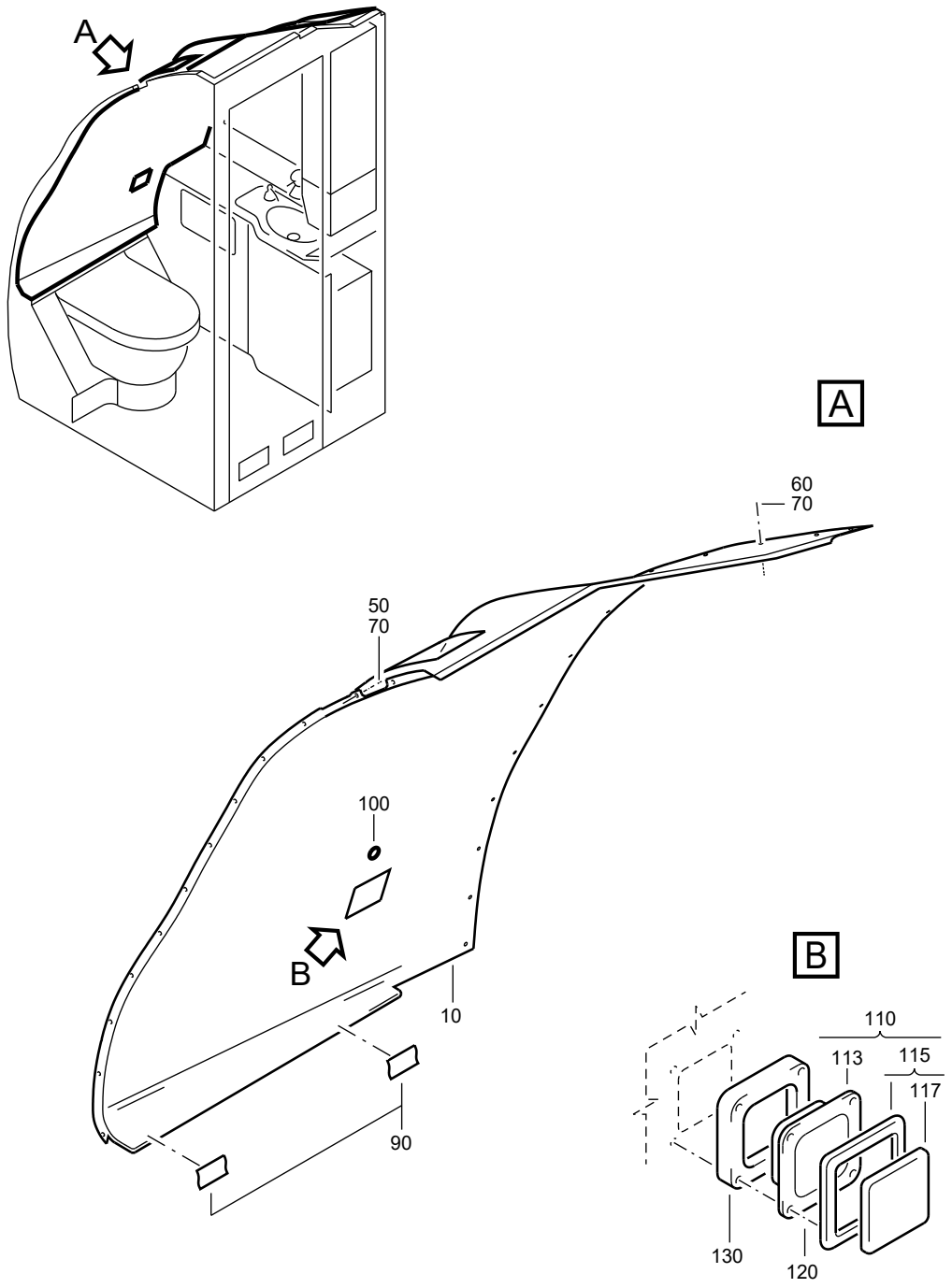

F_PL_254151_05_0_01_00

WALL-REAR
Figure 5/EN254151SHEET05001

FIG. ITEM	PART NUMBER	AIRLINE STOCK NUMBER	NOMENCLATURE 1234567		EFF CODE	UNITS PER ASSY
05						
-001A	D2549010500064		. WALL-REAR used on 030A (254151010), 030A (25415101A), 030A(25415101B), 030A (25415101C), 030B (25415101D), 030A(25415101E), 030A (25415101F), 030E (25415101G), 030B(25415101H), 030E (25415101K), 030G (25415101M), 030F(25415141T) SEE 25-41-51-010 FOR NHA SEE 25-41-51-01A FOR NHA SEE 25-41-51-01B FOR NHA SEE 25-41-51-01C FOR NHA SEE 25-41-51-01D FOR NHA SEE 25-41-51-01E FOR NHA SEE 25-41-51-01F FOR NHA SEE 25-41-51-01G FOR NHA SEE 25-41-51-01H FOR NHA SEE 25-41-51-01K FOR NHA SEE 25-41-51-01M FOR NHA SEE 25-41-51-41T FOR NHA	NP		RF
-001B	D2549020500064		. WALL-REAR used on 030B (254151010), 030C (25415101A), 030B(25415101B), 030B (25415101E), 030C (25415101F) SEE 25-41-51-010 FOR NHA SEE 25-41-51-01A FOR NHA SEE 25-41-51-01B FOR NHA SEE 25-41-51-01E FOR NHA SEE 25-41-51-01F FOR NHA	NP		RF
-001C	D2549030503464		. WALL-REAR used on 030D (25415101F) SEE 25-41-51-01F FOR NHA	NP		RF

- ITEM NOT ILLUSTRATED

FIG. ITEM	PART NUMBER	AIRLINE STOCK NUMBER	NOMENCLATURE 1234567		EFF CODE	UNITS PER ASSY
-001D	D2549020600064		. WALL-REAR used on 030E (25415101A), 030B (25415101C), 030C(25415101H) SEE 25-41-51-01A FOR NHA SEE 25-41-51-01C FOR NHA SEE 25-41-51-01H FOR NHA	NP		RF
-001E	D2549020602664		. WALL-REAR used on 030B (25415101G), 030A (25415101H), 030A (25415101J) SEE 25-41-51-01G FOR NHA SEE 25-41-51-01H FOR NHA SEE 25-41-51-01J FOR NHA	NP		RF
-001F	D2549020602864		. WALL-REAR used on 030C (25415101G), 030D (25415101K) SEE 25-41-51-01G FOR NHA SEE 25-41-51-01K FOR NHA	NP		RF
-001G	D2549030505264		. WALL-REAR used on 030B (25415101J), 030B (25415101K), 030C(25415101L), 030A (25415101M), 030A (25415101N), 030C(25415101P) SEE 25-41-51-01J FOR NHA SEE 25-41-51-01K FOR NHA SEE 25-41-51-01L FOR NHA SEE 25-41-51-01M FOR NHA SEE 25-41-51-01N FOR NHA SEE 25-41-51-01P FOR NHA	NP		RF
-001H	D2549030504064		. WALL-REAR used on 030C (25415101J) SEE 25-41-51-01J FOR NHA	NP		RF

- ITEM NOT ILLUSTRATED

FIG. ITEM	PART NUMBER	AIRLINE STOCK NUMBER	NOMENCLATURE 1234567	EFF CODE	UNITS PER ASSY
-001J	D2549020506264		. WALL-REAR NP used on 030D (25415101J), 030B (25415101P) SEE 25-41-51-01J FOR NHA SEE 25-41-51-01P FOR NHA		RF
-001K	D2549030505664		. WALL-REAR NP used on 030A (25415101K), 030E (25415101P) SEE 25-41-51-01K FOR NHA SEE 25-41-51-01P FOR NHA		RF
-001L	D2549030506064		. WALL-REAR NP used on 030C (25415141B) SEE 25-41-51-41B FOR NHA		RF
-001M	D2549010509064		. WALL-REAR NP used on 030D (254151010), 030F (25415101A), 030D(25415101B), 030E (25415101E), 030F (25415101F), 030G(25415101G), 030J (25415101J), 030G (25415101N) SEE 25-41-51-010 FOR NHA SEE 25-41-51-01A FOR NHA SEE 25-41-51-01B FOR NHA SEE 25-41-51-01E FOR NHA SEE 25-41-51-01F FOR NHA SEE 25-41-51-01G FOR NHA SEE 25-41-51-01J FOR NHA SEE 25-41-51-01N FOR NHA		RF
-001N	D2549010513264		. WALL-REAR NP used on 030F (25415101M), 030H (25415101P), 030B (25415141B) SEE 25-41-51-01M FOR NHA SEE 25-41-51-01P FOR NHA SEE 25-41-51-41B FOR NHA		RF

- ITEM NOT ILLUSTRATED

FIG. ITEM	PART NUMBER	AIRLINE STOCK NUMBER	NOMENCLATURE 1234567		EFF CODE	UNITS PER ASSY
-001P	D2549020600064		. WALL-REAR used on 030J (25415101A), 030F (25415101C), 030F(25415101H) SEE 25-41-51-01A FOR NHA SEE 25-41-51-01C FOR NHA SEE 25-41-51-01H FOR NHA	NP		RF
-001Q	D2549020500064		. WALL-REAR used on 030H (25415101A) SEE 25-41-51-01A FOR NHA	NP		RF
-001R	D2549030505264		. WALL-REAR used on 030K (25415101J) SEE 25-41-51-01J FOR NHA	NP		RF
-001S	D2549030504064		. WALL-REAR used on 030L (25415101J) SEE 25-41-51-01J FOR NHA	NP		RF
010A	A225401241-500		. . WALL ASSY-REAR used on 001A, 001D, 001E, 001G, 001H, 001M, 001N			001
-010B	A225401241-502		. . WALL ASSY-REAR used on 001B, 001F, 001J			001
-010C	A225401241-600		. . WALL ASSY-REAR used on 001C			001
-010D	A225401241-504		. . WALL ASSY-REAR used on 001K			001
-010E	A225401241-506		. . WALL ASSY-REAR used on 001L			001
-010F	A225491241-500		. . WALL ASSY-REAR POST SB 25-1289 used on 001P, 001Q, 001R, 001S			001

- ITEM NOT ILLUSTRATED

FIG. ITEM	PART NUMBER	AIRLINE STOCK NUMBER	NOMENCLATURE 1234567	EFF CODE	UNITS PER ASSY
-020A	NSA935405-01		. . . MOUNT used on 010A, 010B, 010C, 010D, 010E, 010F		035
-030A	NAS1833C08-250		. . . INSERT used on 010A, 010B, 010C, 010D, 010E, 010F		013
-040A	NSA5345-08C		. . . INSERT used on 010A, 010B, 010C, 010D, 010E, 010F		004
050A	NAS1801-3-7		. . SCREW POST SB 25-1640 used on 001A, 001B, 001C, 001D, 001E, 001F, 001G, 001H, 001J, 001K, 001L, 001M, 001N, 001P, 001Q, 001R, 001S		012
060A	NAS1096-3-12		. . SCREW BUY PN NAS1801-3-12 used on 001A, 001B, 001C, 001D, 001E, 001F, 001M, 001N, 001P, 001Q		013
-060B	DAN298-4030		. . SCREW used on 001G, 001H, 001J, 001K, 001L, 001R, 001S		013
070A	ASNA0113-48ADL		. . WASHER used on 001A, 001B, 001C, 001D, 001E, 001F, 001G, 001H, 001J, 001K, 001L, 001M, 001N, 001P, 001Q, 001R, 001S		025
090A	ABS0306B01-2-11		. . SECTION-SEALING USE AS REQUIRED used on 001A, 001B, 001C, 001D, 001E, 001F, 001M, 001P, 001Q		AR

- ITEM NOT ILLUSTRATED

FIG. ITEM	PART NUMBER	AIRLINE STOCK NUMBER	NOMENCLATURE 1234567	EFF CODE	UNITS PER ASSY
100A	SJ5012WHITE		. . BUMPER used on 001A, 001B, 001C, 001D, 001P, 001Q		001
100B	DCIN108-02DA2-1		. . BUMPER used on 001E, 001F, 001G, 001H, 001J, 001K, 001L, 001R, 001S		001
110A	A3-929-0001-01		. . SWITCH ASSY-TOILET POST SB 25-1165 used on 001A, 001B, 001C, 001E, 001F, 001G, 001J, 001K, 001L, 001M, 001N, 001Q, 001R		001
-110B	A225401462-000		. . SWITCH ASSY-TOILET used on 001D, 001H, 001P, 001S		001
113A	774-081-31		. . . FRAME used on 110A, 110B		001
115A	774-101-79		. . . PLATE-FRONT used on 110A, 110B		001
117A	774-101-81		. . . . FOIL-FRONT used on 115A		001
120A	NAS514P832-5		. . SCREW POST SB 25-1165 used on 001A, 001B, 001C, 001D, 001E, 001P, 001Q		004
-120B	NAS1102-08-5		. . SCREW used on 001G, 001H, 001J, 001K, 001L, 001R, 001S		004
-120C	NAS1102-08-18		. . SCREW POST SB 25-1214 used on 001F, 001M, 001N		004

- ITEM NOT ILLUSTRATED

FIG. ITEM	PART NUMBER	AIRLINE STOCK NUMBER	NOMENCLATURE 1234567	EFF CODE	UNITS PER ASSY
130A	A225401245-502		. . SPACER POST SB 25-1214 used on 001M, 001N		001
-130B	A225401245-512		. . SPACER POST SB 25-1214 used on 001L		001
-130C	A225401245-506		. . SPACER POST SB 25-1214 used on 001F		001
-140A	EF1840-08CM		. . INSERT POST SB 25-1214 used on 001F, 001L, 001M, 001N		008

- ITEM NOT ILLUSTRATED

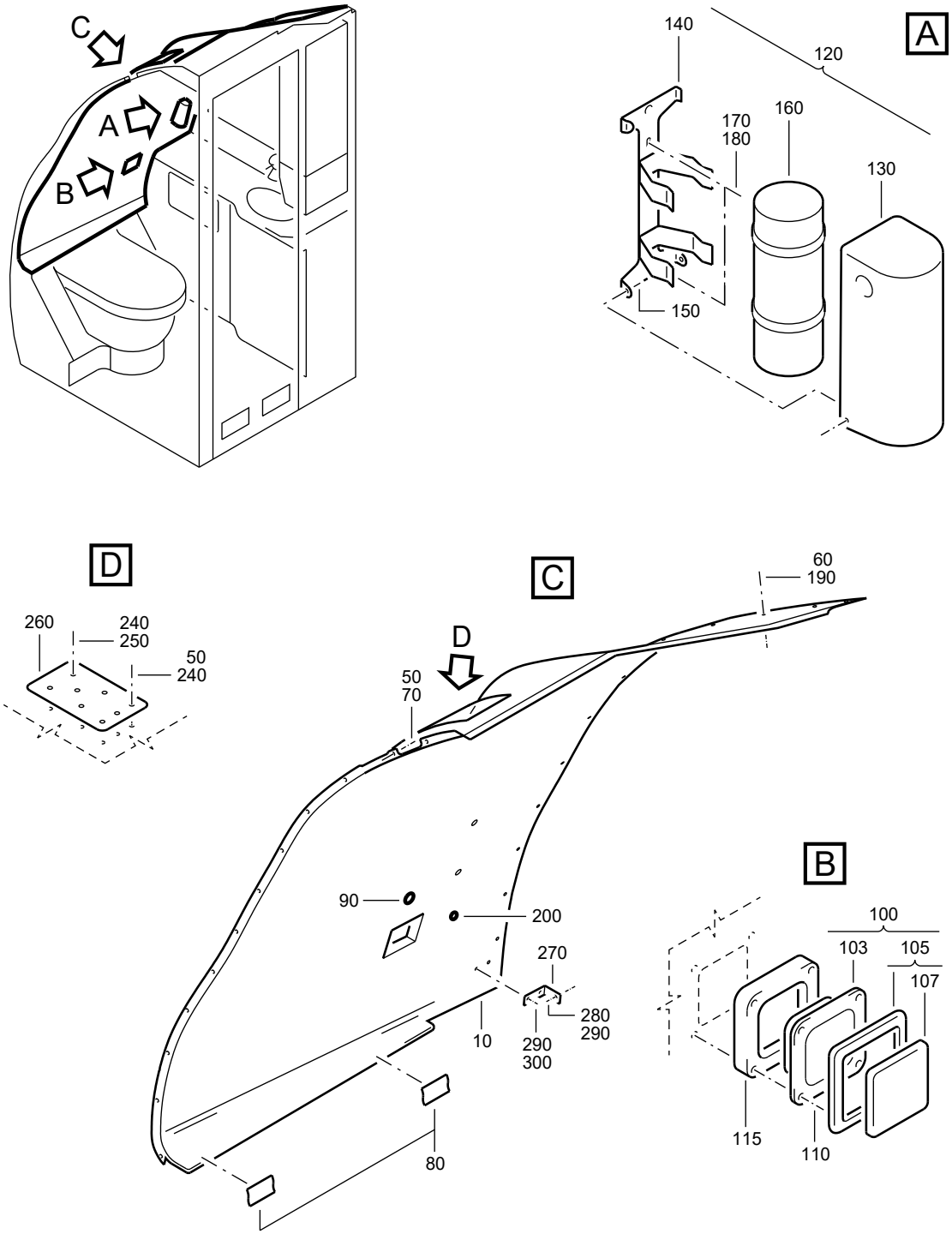

F_PL_254151_05_A_01_00

WALL-REAR
Figure 05A/EN254151SHEET05A01

FIG. ITEM	PART NUMBER	AIRLINE STOCK NUMBER	NOMENCLATURE 1234567		EFF CODE	UNITS PER ASSY
05A						
-001A	D2549020504064		. WALL-REAR used on 030A (25415101D) SEE 25-41-51-01D FOR NHA	NP		RF
-001B	D2549020600464		. WALL-REAR used on 030D (254151410) SEE 25-41-51-410 FOR NHA	NP		RF
-001C	D2549030501864		. WALL-REAR used on 030C (25415101D), 030B (25415101F) SEE 25-41-51-01D FOR NHA SEE 25-41-51-01F FOR NHA	NP		RF
-001D	D2549010508064		. WALL-REAR used on 030A (25415101G) SEE 25-41-51-01G FOR NHA	NP		RF
-001E	D2549010510464		. WALL-REAR used on 030F (25415101J) SEE 25-41-51-01J FOR NHA	NP		RF
-001F	D2549030505464		. WALL-REAR used on 030E (25415101J), 030A (25415101P) SEE 25-41-51-01J FOR NHA SEE 25-41-51-01P FOR NHA	NP		RF
-001G	D2549010511864		. WALL-REAR used on 030B (25415101N), 030D (25415101P) SEE 25-41-51-01N FOR NHA SEE 25-41-51-01P FOR NHA	NP		RF
-001H	D2549010513864		. WALL-REAR used on 030A (25415141B) SEE 25-41-51-41B FOR NHA	NP		RF

- ITEM NOT ILLUSTRATED

FIG. ITEM	PART NUMBER	AIRLINE STOCK NUMBER	NOMENCLATURE 1234567		EFF CODE	UNITS PER ASSY
-001J	D2549010502464		. WALL-REAR used on 030B (25415101A), 030D (25415101G) SEE 25-41-51-01A FOR NHA SEE 25-41-51-01G FOR NHA	NP		RF
-001K	D2549020601264		. WALL-REAR used on 030C (25415101E), 030E (25415101L) SEE 25-41-51-01E FOR NHA SEE 25-41-51-01L FOR NHA	NP		RF
-001L	D2549020611664		. WALL-REAR POST SB 25-1289 used on 030E (25415101C), 030G (25415101F), 030E (25415101H), 030D (25415101L), 030D (25415101N), 030J (25415101Q), 030C (25415101S), 030E (25415101T), 030E(254151410), 030F (25415141D) SEE 25-41-51-01C FOR NHA SEE 25-41-51-01F FOR NHA SEE 25-41-51-01H FOR NHA SEE 25-41-51-01L FOR NHA SEE 25-41-51-01N FOR NHA SEE 25-41-51-01Q FOR NHA SEE 25-41-51-01S FOR NHA SEE 25-41-51-01T FOR NHA SEE 25-41-51-410 FOR NHA SEE 25-41-51-41D FOR NHA	NP		RF

- ITEM NOT ILLUSTRATED

FIG. ITEM	PART NUMBER	AIRLINE STOCK NUMBER	NOMENCLATURE 1234567	EFF CODE	UNITS PER ASSY
-001M	D2549010501064		. WALL-REAR NP used on 030E (25415101B), 030D (25415101C), 030E (25415101F), 030F (25415101G), 030D (25415101H), 030H (25415101J), 030F (25415101K), 030A (25415101L), 030H (25415101Q), 030C (25415101X), 030D (25415141T) SEE 25-41-51-01B FOR NHA SEE 25-41-51-01C FOR NHA SEE 25-41-51-01F FOR NHA SEE 25-41-51-01G FOR NHA SEE 25-41-51-01H FOR NHA SEE 25-41-51-01J FOR NHA SEE 25-41-51-01K FOR NHA SEE 25-41-51-01L FOR NHA SEE 25-41-51-01Q FOR NHA SEE 25-41-51-01X FOR NHA SEE 25-41-51-41T FOR NHA		RF
-001N	D2549010511864		. WALL-REAR NP used on 030J (25415101P) SEE 25-41-51-01P FOR NHA		RF
-001P	D2549010508164		. WALL-REAR NP POST SB 25-1289 used on 030H (25415101G) SEE 25-41-51-01G FOR NHA		RF
010A	A225401241-600		. . WALL ASSY-REAR used on 001A, 001D, 001E, 001G, 001J		001
-010B	A225401241-602		. . WALL ASSY-REAR used on 001B		001
-010C	A225401241-604		. . WALL ASSY-REAR used on 001C, 001F		001

- ITEM NOT ILLUSTRATED

FIG. ITEM	PART NUMBER	AIRLINE STOCK NUMBER	NOMENCLATURE 1234567	EFF CODE	UNITS PER ASSY
-010D	A225401241-606		. . WALL ASSY-REAR used on 001H		001
-010E	A225491241-500		. . WALL ASSY-REAR POST SB 25-1287 POST SB 25-1289 used on 001K, 001L, 001M, 001N, 001P		001
-020A	NSA935405-01		. . . MOUNT used on 010A, 010B, 010C, 010D, 010E		035
-030A	NAS1833C08-250		. . . INSERT used on 010A, 010B, 010C, 010D, 010E		015
-035A	NSA5345-08C		. . . INSERT used on 010A, 010B, 010C, 010D, 010E		004
050A	NAS1096-3-7		. . SCREW BUY PN NAS1801-3-7 used on 001A, 001B, 001C, 001D, 001E, 001F, 001G, 001H, 001J, 001K, 001L, 001M, 001N, 001P		012
060A	NAS1096-3-12		. . SCREW BUY PN NAS1801-3-12 used on 001A, 001B, 001C, 001D, 001E, 001J, 001K, 001L, 001M, 001P		013
-060B	DAN298-4030		. . SCREW used on 001F, 001G, 001H, 001N		013

- ITEM NOT ILLUSTRATED

FIG. ITEM	PART NUMBER	AIRLINE STOCK NUMBER	NOMENCLATURE 1234567	EFF CODE	UNITS PER ASSY
070A	ASNA0113-48ADL		. . WASHER used on 001A, 001B, 001C, 001D, 001E, 001F, 001G, 001H, 001J, 001K, 001L, 001M, 001N, 001P		012
080A	ABS0306B01-2-11		. . SECTION-SEALING USE AS REQUIRED used on 001A, 001B, 001C, 001D, 001E, 001J, 001K, 001L, 001M, 001P		AR
090A	SJ5012WHITE		. . BUMPER used on 001A, 001B, 001C, 001D, 001K, 001P		001
-090B	DCIN108-02DA2-1		. . BUMPER used on 001E, 001F, 001G, 001H, 001L, 001M, 001N		001
100A	A3-929-0001-01		. . SWITCH ASSY-TOILET used on 001A, 001B, 001C, 001D, 001E, 001F, 001G, 001H, 001J, 001K, 001L, 001M, 001N, 001P		001
103A	774-081-31		. . . FRAME used on 100A		001
105A	774-101-79		. . . PLATE-FRONT used on 100A		001
107A	774-101-81		. . . . FOIL-FRONT used on 105A		001
110A	NAS1102-08-5		. . SCREW used on 001A, 001C, 001D, 001E, 001F, 001G, 001K, 001N, 001P		004

- ITEM NOT ILLUSTRATED

FIG. ITEM	PART NUMBER	AIRLINE STOCK NUMBER	NOMENCLATURE 1234567	EFF CODE	UNITS PER ASSY
-110B	NAS1102-08-18		. . SCREW POST SB 25-1214 POST SB 25-1287 used on 001B, 001H, 001J, 001L, 001M		004
115A	A225401245-502		. . SPACER POST SB 25-1214 used on 001J, 001L		001
-115B	A225401245-508		. . SPACER POST SB 25-1214 used on 001B		001
-115C	A225401245-520		. . SPACER POST SB 25-1214 used on 001H		001
120A	A325400455-504		. . DISPENSER-PLASTIC CUP used on 001A		001
-120B	A325400455-518		. . DISPENSER-PLASTIC CUP used on 001B		001
-120C	A325400455-522		. . DISPENSER-PLASTIC CUP used on 001C		001
-120D	A325400455-506		. . DISPENSER-PLASTIC CUP used on 001D, 001E, 001J, 001P		001
-120E	A325400460-512		. . DISPENSER-PLASTIC CUP used on 001F		001
-120F	A325400460-500		. . DISPENSER-PLASTIC CUP used on 001G, 001N		001
-120G	A325400460-518		. . DISPENSER-PLASTIC CUP used on 001H		001
-120H	A325400455-500		. . DISPENSER-PLASTIC CUP used on 001K		001

- ITEM NOT ILLUSTRATED

FIG. ITEM	PART NUMBER	AIRLINE STOCK NUMBER	NOMENCLATURE 1234567	EFF CODE	UNITS PER ASSY
130A	A325400455-600		. . . COVER-PLASTIC CUP DISPENSER used on 120A, 120D, 120H		001
-130B	A325400455-606		. . . COVER-PLASTIC CUP DISPENSER used on 120B		001
-130C	A325400455-612		. . . COVER-PLASTIC CUP DISPENSER used on 120C		001
-130D	A325400461-512		. . . COVER-PLASTIC CUP DISPENSER used on 120E		001
-130E	A325400461-500		. . . COVER-PLASTIC CUP DISPENSER used on 120F		001
-130F	A325400461-518		. . . COVER-PLASTIC CUP DISPENSER used on 120G		001
140A	5L0024400100000		. . . HOLDER-PLASTIC CUP DISPENSER used on 120A, 120B, 120C, 120D, 120H		001
-140B	A325400463-000		. . . HOLDER-PLASTIC CUP DISPENSER used on 120A, 120B, 120C, 120D, 120E, 120F, 120G,120H		001
150A	DIN6799-4B2A		. . . WASHER-RETAINING used on 120A, 120D, 120H		002
-150B	DIN6799RS4		. . . WASHER-RETAINING used on 120B, 120C, 120E, 120F, 120G		002

- ITEM NOT ILLUSTRATED

FIG. ITEM	PART NUMBER	AIRLINE STOCK NUMBER	NOMENCLATURE 1234567	EFF CODE	UNITS PER ASSY
160A	5L0024400200000		. . . TUBE used on 120A, 120B		001
-160B	5L0024400500000		. . . TUBE used on 120C, 120D		001
-160C	A325400462-200		. . . TUBE used on 120E, 120F, 120G		001
-160D	5L0024400300000		. . . TUBE used on 120H		001
170A	NAS1096-2-4		. . SCREW BUY PN NAS1801-08-4 used on 001A, 001B, 001C, 001D, 001E, 001F, 001G, 001H, 001J, 001K, 001N, 001P		002
180A	AN960C8		. . WASHER BUY PN NAS1149CN832R used on 001A, 001B, 001C, 001D, 001P		002
-180B	NAS1149CN832R		. . WASHER used on 001E, 001F, 001G, 001H, 001J, 001K, 001N		002
190A	ASNA0113-40ADL		. . WASHER used on 001A, 001B, 001C, 001D, 001E, 001F, 001G, 001H, 001J, 001K, 001L, 001M, 001N, 001P		013
200A	0-182-005700000		. . BUMPER used on 001A, 001B, 001C, 001D, 001E, 001F, 001G, 001H, 001J, 001K, 001N, 001P		001

- ITEM NOT ILLUSTRATED

FIG. ITEM	PART NUMBER	AIRLINE STOCK NUMBER	NOMENCLATURE 1234567	EFF CODE	UNITS PER ASSY
-210A	EF1840-08CM		. . INSERT POST SB 25-1214 used on 001B, 001H, 001J		008
-220A	NAS1833C3-250		. . INSERT POST SB 25-1289 POST SB 25-1287 used on 001K, 001L, 001M, 001P		005
-230A	NAS1833C3-370		. . INSERT POST SB 25-1287 POST SB 25-1289 used on 001K, 001L, 001M, 001P		003
240A	NAS1149C0332R		. . WASHER POST SB 25-1289 POST SB 25-1287 used on 001K, 001L, 001M, 001P		008
250A	NAS1096-3-5		. . SCREW POST SB 25-1289 POST SB 25-1287 BUY PN NAS1801-3-5 used on 001K, 001L, 001M, 001P		005
260A	A225401236-202		. . SHEET POST SB 25-1289 POST SB 25-1287 used on 001K, 001L, 001M, 001P		001
270A	A225401236-204		. . ANGLE POST SB 25-1287 used on 001M		001
280A	NAS1096-3-7		. . SCREW POST SB 25-1287 BUY PN NAS1801-3-7 used on 001M		001

- ITEM NOT ILLUSTRATED

FIG. ITEM	PART NUMBER	AIRLINE STOCK NUMBER	NOMENCLATURE 1234567	EFF CODE	UNITS PER ASSY
290A	NAS1149C0332R		. . WASHER POST SB 25-1287 used on 001M		003
300A	NAS1096-3-5		. . SCREW POST SB 25-1287 BUY PN NAS1801-3-5 used on 001M		002

- ITEM NOT ILLUSTRATED

THIS PAGE IS INTENTIONALLY LEFT BLANK

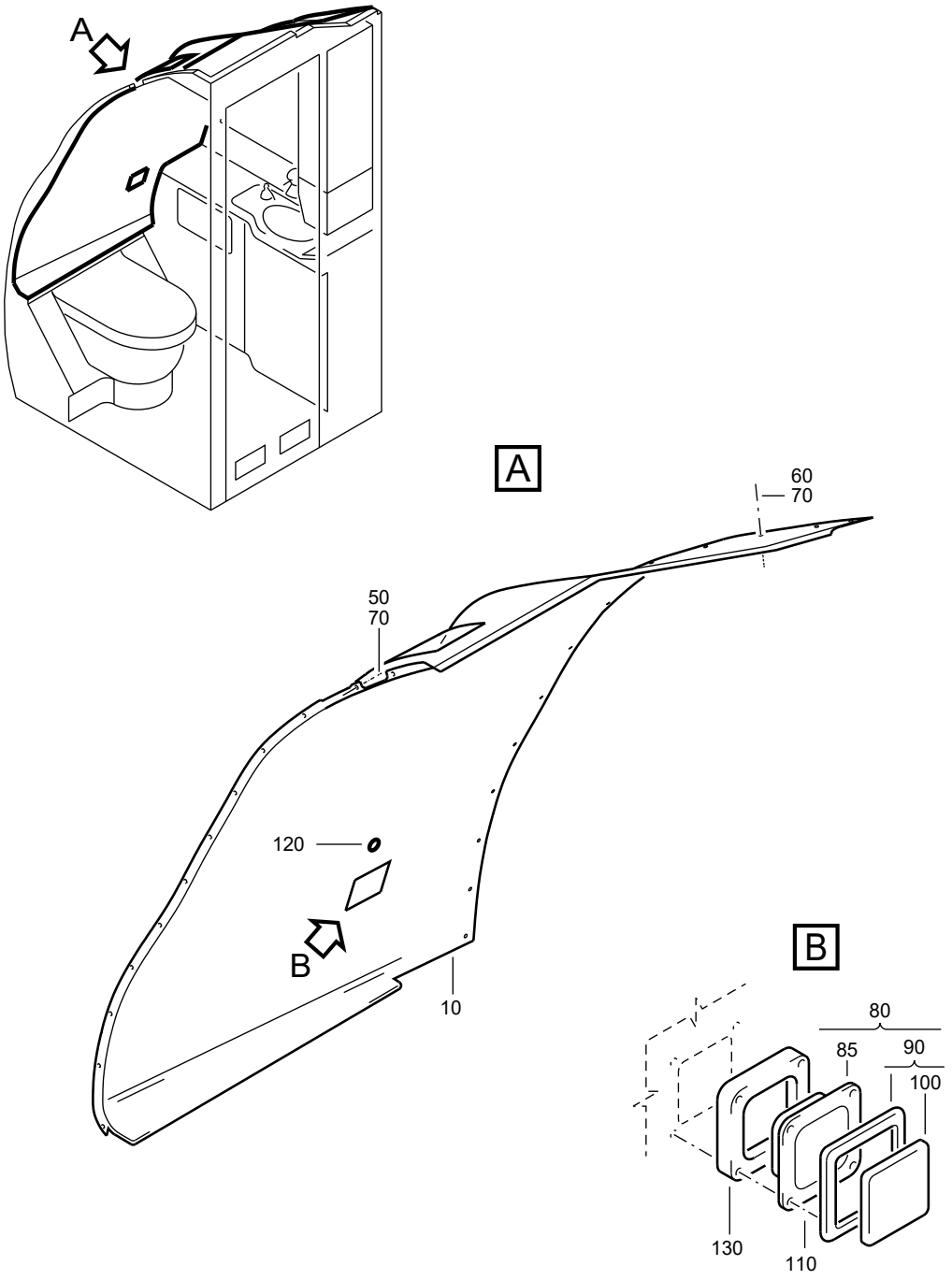

F_PL_254151_05_B_01_00

WALL-REAR
Figure 05B/EN254151SHEET05B01

FIG. ITEM	PART NUMBER	AIRLINE STOCK NUMBER	NOMENCLATURE 1234567	EFF CODE	UNITS PER ASSY
05B					
-001A	D2549010509864		. WALL-REAR NP used on 030B (25415101M) SEE 25-41-51-01M FOR NHA		RF
-001B	D2549010510064		. WALL-REAR NP used on 030G (25415101J), 030C (25415101K), 030B(25415101L), 030C (25415101M), 030C (25415101N) SEE 25-41-51-01J FOR NHA SEE 25-41-51-01K FOR NHA SEE 25-41-51-01L FOR NHA SEE 25-41-51-01M FOR NHA SEE 25-41-51-01N FOR NHA		RF

- ITEM NOT ILLUSTRATED

FIG. ITEM	PART NUMBER	AIRLINE STOCK NUMBER	NOMENCLATURE 1234567	EFF CODE	UNITS PER ASSY
-001C	D2549010512664		. WALL-REAR NP PRE VSB A2-254-25-130 used on 030G (25415101P), 030C (25415101Q), 030B (25415101S), 030A (25415101T), 030B (25415101U), 030A (25415101V), 030D (25415101W), 030A (25415101X), 030A(25415101Y), 030A (25415101Z), 030A (254151410), 030A(25415141A), 030D (25415141B), 030A (25415141C), 030A(25415141D), 030C (25415141F), 030C (25415141G), 030A(25415141H), 030D (25415141J), 030A (25415141K), 030A(25415141L), 030A (25415141M), 030E (25415141N) SEE 25-41-51-01P FOR NHA SEE 25-41-51-01Q FOR NHA SEE 25-41-51-01S FOR NHA SEE 25-41-51-01T FOR NHA SEE 25-41-51-01U FOR NHA SEE 25-41-51-01V FOR NHA SEE 25-41-51-01W FOR NHA SEE 25-41-51-01X FOR NHA SEE 25-41-51-01Y FOR NHA SEE 25-41-51-01Z FOR NHA SEE 25-41-51-410 FOR NHA SEE 25-41-51-41A FOR NHA SEE 25-41-51-41B FOR NHA SEE 25-41-51-41C FOR NHA SEE 25-41-51-41D FOR NHA SEE 25-41-51-41F FOR NHA SEE 25-41-51-41G FOR NHA SEE 25-41-51-41H FOR NHA SEE 25-41-51-41J FOR NHA SEE 25-41-51-41K FOR NHA SEE 25-41-51-41L FOR NHA		RF

- ITEM NOT ILLUSTRATED

FIG. ITEM	PART NUMBER	AIRLINE STOCK NUMBER	NOMENCLATURE 1234567		EFF CODE	UNITS PER ASSY
			SEE 25-41-51-41M FOR NHA SEE 25-41-51-41N FOR NHA			
-001D	D2549020610264		. WALL-REAR used on 030E (25415101N) SEE 25-41-51-01N FOR NHA	NP		RF
-001E	D2549030507264		. WALL-REAR used on 030F (25415101N) SEE 25-41-51-01N FOR NHA	NP		RF
-001F	D2549010514064		. WALL-REAR used on 030F (25415101P), 030D (25415101X), 030E(25415101Y), 030A (25415141G) SEE 25-41-51-01P FOR NHA SEE 25-41-51-01X FOR NHA SEE 25-41-51-01Y FOR NHA SEE 25-41-51-41G FOR NHA	NP		RF
-001G	D2549030508464		. WALL-REAR used on 030A (25415101Q), 030E (25415101S), 030C (25415101V), 030B (25415101W) SEE 25-41-51-01Q FOR NHA SEE 25-41-51-01S FOR NHA SEE 25-41-51-01V FOR NHA SEE 25-41-51-01W FOR NHA	NP		RF

- ITEM NOT ILLUSTRATED

FIG. ITEM	PART NUMBER	AIRLINE STOCK NUMBER	NOMENCLATURE 1234567	EFF CODE	UNITS PER ASSY
-001H	D2549020613664		. WALL-REAR NP used on 030B (25415101Q), 030C (25415101T), 030E (25415101V), 030F (25415101W), 030F (25415141B), 030D(25415141D), 030F (25415141G), 030D (25415141K), 030F(25415141M), 030C (25415141N) SEE 25-41-51-01Q FOR NHA SEE 25-41-51-01T FOR NHA SEE 25-41-51-01V FOR NHA SEE 25-41-51-01W FOR NHA SEE 25-41-51-41B FOR NHA SEE 25-41-51-41D FOR NHA SEE 25-41-51-41G FOR NHA SEE 25-41-51-41K FOR NHA SEE 25-41-51-41M FOR NHA SEE 25-41-51-41N FOR NHA		RF
-001J	D2549020604664		. WALL-REAR NP used on 030A (25415101R) SEE 25-41-51-01R FOR NHA		RF

- ITEM NOT ILLUSTRATED

FIG. ITEM	PART NUMBER	AIRLINE STOCK NUMBER	NOMENCLATURE 1234567	EFF CODE	UNITS PER ASSY
-001K	D2549010514464		. WALL-REAR NP used on 030G (25415101Q), 030B (25415101T), 030A (25415101U), 030D (25415101V), 030C (25415101W), 030C (25415141C), 030D (25415141G), 030A (25415141J), 030B(25415141K), 030B (25415141L), 030E (25415141M) SEE 25-41-51-01Q FOR NHA SEE 25-41-51-01T FOR NHA SEE 25-41-51-01U FOR NHA SEE 25-41-51-01V FOR NHA SEE 25-41-51-01W FOR NHA SEE 25-41-51-41C FOR NHA SEE 25-41-51-41G FOR NHA SEE 25-41-51-41J FOR NHA SEE 25-41-51-41K FOR NHA SEE 25-41-51-41L FOR NHA SEE 25-41-51-41M FOR NHA		RF
-001L	D2549030508664		. WALL-REAR NP used on 030F (25415101Q), 030D (25415101U), 030B (25415101X), 030D (25415101Y), 030B (25415141C) SEE 25-41-51-01Q FOR NHA SEE 25-41-51-01U FOR NHA SEE 25-41-51-01X FOR NHA SEE 25-41-51-01Y FOR NHA SEE 25-41-51-41C FOR NHA		RF

- ITEM NOT ILLUSTRATED

FIG. ITEM	PART NUMBER	AIRLINE STOCK NUMBER	NOMENCLATURE 1234567		EFF CODE	UNITS PER ASSY
-001M	R254H155000664		. WALL-REAR used on 030C (254151010), 030D (25415101A), 030C(25415101B), 030C (25415101C), 030D (25415101E), 030E(25415101M), 030B (25415101R), 030E (25415141T) SEE 25-41-51-010 FOR NHA SEE 25-41-51-01A FOR NHA SEE 25-41-51-01B FOR NHA SEE 25-41-51-01C FOR NHA SEE 25-41-51-01E FOR NHA SEE 25-41-51-01M FOR NHA SEE 25-41-51-01R FOR NHA SEE 25-41-51-41T FOR NHA	NP		RF
-001N	R254H155000664		. WALL-REAR used on 030G (25415101A), 030F (25415101B) SEE 25-41-51-01A FOR NHA SEE 25-41-51-01B FOR NHA	NP		RF
-001P	D2549010509864		. WALL-REAR used on 030H (25415101M) SEE 25-41-51-01M FOR NHA	NP		RF
-001Q	D2549010512664		. WALL-REAR used on 030H (25415141J) SEE 25-41-51-41J FOR NHA	NP		RF
-001R	R22540119604664		. WALL-REAR POST VSB A2-254-25-130 used on 030F (254151410), 030F (25415141K), 030K (25415141N) SEE 25-41-51-410 FOR NHA SEE 25-41-51-41K FOR NHA SEE 25-41-51-41N FOR NHA	NP		RF
010A	A225401241-500		. . WALL ASSY-REAR used on 001A, 001B, 001M			001

- ITEM NOT ILLUSTRATED

FIG. ITEM	PART NUMBER	AIRLINE STOCK NUMBER	NOMENCLATURE 1234567	EFF CODE	UNITS PER ASSY
-010B	A225401241-700		. . WALL ASSY-REAR PRE VSB A2-254-25-130 used on 001C, 001K		001
-010C	A225401241-510		. . WALL ASSY-REAR used on 001D		001
-010D	A225401241-508		. . WALL ASSY-REAR used on 001E		001
-010E	A225401241-736		. . WALL ASSY-REAR used on 001F		001
-010F	A225401241-726		. . WALL ASSY-REAR used on 001G		001
-010G	A225401241-704		. . WALL ASSY-REAR used on 001H		001
-010H	A225401241-600		. . WALL ASSY-REAR used on 001J		001
-010J	A225401241-732		. . WALL ASSY-REAR used on 001L		001
-010L	A225401241-738		. . WALL ASSY-REAR POST VSB A2-254-25-130 used on 001R		001
-020A	NSA935405-01		. . . MOUNT USE AS REQUIRED used on 010A, 010B, 010C, 010D, 010E, 010F, 010G, 010H, 010J, 010K, 010L		AR
-030A	NAS1833C08-250		. . . INSERT used on 010A, 010B, 010C, 010D, 010E, 010F, 010G, 010H, 010J, 010K, 010L		015

- ITEM NOT ILLUSTRATED

FIG. ITEM	PART NUMBER	AIRLINE STOCK NUMBER	NOMENCLATURE 1234567	EFF CODE	UNITS PER ASSY
-045A	EF1840-08CM		. . . INSERT used on 010B, 010E, 010F, 010G, 010H, 010J, 010L		008
050A	NAS1801-3-7		. . SCREW POST SB 25-1640 used on 001A, 001B, 001C, 001D, 001E, 001F, 001G, 001H, 001J, 001K, 001L, 001M, 001N, 001P, 001Q, 001R		012
060A	NAS1096-3-12		. . SCREW BUY PN NAS1801-3-12 used on 001A, 001K, 001L, 001M, 001N, 001P		013
-060B	DAN298-4030		. . SCREW used on 001B, 001C, 001D, 001E, 001F, 001G, 001H, 001J, 001Q, 001R		013
070A	ASNA0113-48ADL		. . WASHER used on 001A, 001B, 001C, 001D, 001E, 001F, 001G, 001H, 001J, 001K, 001L, 001M, 001N, 001P, 001Q, 001R		025
080A	A3-929-0001-01		. . SWITCH ASSY-TOILET used on 001A, 001B, 001C, 001D, 001E, 001F, 001G, 001H, 001J, 001K, 001L, 001M, 001N, 001P, 001Q, 001R		001
085A	774-081-31		. . . FRAME used on 080A		001
090A	774-101-79		. . . PLATE-FRONT used on 080A		001

- ITEM NOT ILLUSTRATED

FIG. ITEM	PART NUMBER	AIRLINE STOCK NUMBER	NOMENCLATURE 1234567	EFF CODE	UNITS PER ASSY
100A	774-101-81		. . . . FOIL-FRONT used on 090A		001
110A	NAS1102-08-5		. . SCREW used on 001A, 001B, 001E, 001J, 001P		004
-110B	NAS1102-08-16		. . SCREW used on 001C, 001F, 001G, 001H, 001K, 001L, 001Q, 001R		004
-110C	NAS1102-08-18		. . SCREW POST SB 25-1214 used on 001D, 001M, 001N		004
120A	DCIN108-02DA2-1		. . BUMPER used on 001A, 001B, 001D, 001E, 001J, 001P		001
130A	A225401245-502		. . SPACER PRE VSB A2-254-25-130 POST SB 25-1214 used on 001C, 001D, 001K, 001M, 001N, 001Q		001
-130B	A225401245-500		. . SPACER used on 001F		001
-130C	A225401245-512		. . SPACER used on 001G		001
-130D	A225401245-506		. . SPACER used on 001H		001
-130E	A225401245-524		. . SPACER used on 001L		001
-130F	A225401245-522		. . SPACER POST VSB A2-254-25-130 used on 001R		001

- ITEM NOT ILLUSTRATED

FIG. ITEM	PART NUMBER	AIRLINE STOCK NUMBER	NOMENCLATURE 1234567	EFF CODE	UNITS PER ASSY
-140A	EF1840-08CM		. . INSERT POST SB 25-1214 used on 001D, 001M, 001N		008

- ITEM NOT ILLUSTRATED

THIS PAGE IS INTENTIONALLY LEFT BLANK

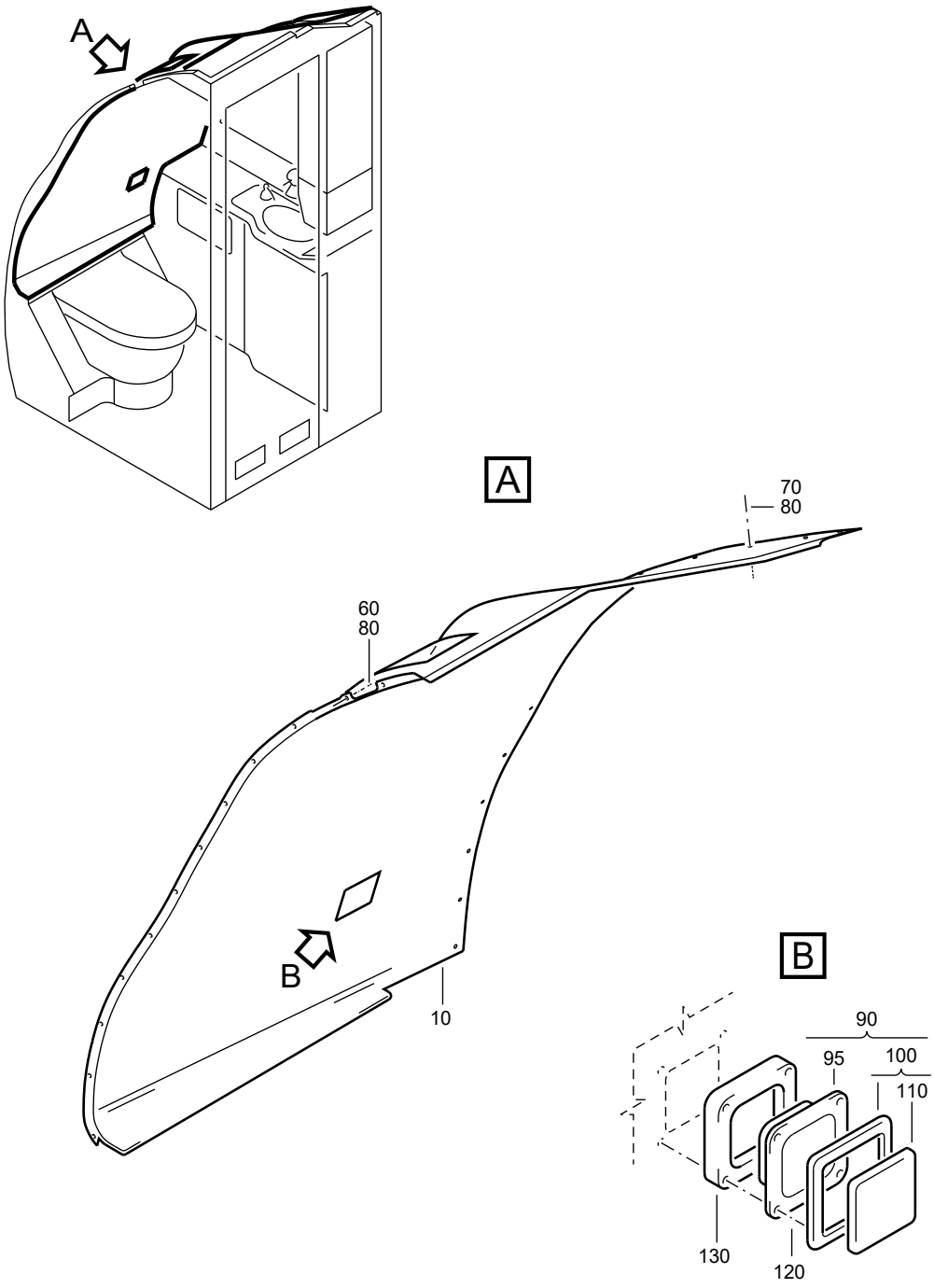

F_PL_254151_05_C_01_00

WALL-REAR
Figure 05C/EN254151SHEET05C01

FIG. ITEM	PART NUMBER	AIRLINE STOCK NUMBER	NOMENCLATURE 1234567		EFF CODE	UNITS PER ASSY
05C						
-001A	D2549020612264		. WALL-REAR used on 030A (25415101S), 030E (25415101W), 030C (25415101Y), 030C (254151410), 030G (25415141G) SEE 25-41-51-01S FOR NHA SEE 25-41-51-01W FOR NHA SEE 25-41-51-01Y FOR NHA SEE 25-41-51-410 FOR NHA SEE 25-41-51-41G FOR NHA	NP		RF
-001B	D2549030601464		. WALL-REAR used on 030C (25415101Z), 030G (25415141B), 030B (25415141D), 030B (25415141G), 030H (25415141M) SEE 25-41-51-01Z FOR NHA SEE 25-41-51-41B FOR NHA SEE 25-41-51-41D FOR NHA SEE 25-41-51-41G FOR NHA SEE 25-41-51-41M FOR NHA	NP		RF
-001C	D2549020710064		. WALL-REAR used on 030B (25415141A), 030B (25415141J) SEE 25-41-51-41A FOR NHA SEE 25-41-51-41J FOR NHA	NP		RF
-001D	D2549030601664		. WALL-REAR used on 030A (25415141F), 030E (25415141H) SEE 25-41-51-41F FOR NHA SEE 25-41-51-41H FOR NHA	NP		RF
-001E	D2549020608264		. WALL-REAR used on 030D (25415101M) SEE 25-41-51-01M FOR NHA	NP		RF

- ITEM NOT ILLUSTRATED

FIG. ITEM	PART NUMBER	AIRLINE STOCK NUMBER	NOMENCLATURE 1234567		EFF CODE	UNITS PER ASSY
-001F	D2549030609264		. WALL-REAR used on 030E (25415141J), 030C (25415141K), 030C(25415141M) SEE 25-41-51-41J FOR NHA SEE 25-41-51-41K FOR NHA SEE 25-41-51-41M FOR NHA	NP		RF
-001G	D2549030612864		. WALL-REAR used on 030G (25415141M), 030C (25415141T) SEE 25-41-51-41M FOR NHA SEE 25-41-51-41T FOR NHA	NP		RF
-001H	D2549030608064		. WALL-REAR used on 030D (25415141L), 030C (25415141P), 030D(25415141R), 030C (25415141S), 030B (25415141T), 030D(25415141U) SEE 25-41-51-41L FOR NHA SEE 25-41-51-41P FOR NHA SEE 25-41-51-41R FOR NHA SEE 25-41-51-41S FOR NHA SEE 25-41-51-41T FOR NHA SEE 25-41-51-41U FOR NHA	NP		RF
-001J	D2549010609064		. WALL-REAR used on 030A (25415141N) SEE 25-41-51-41N FOR NHA	NP		RF

- ITEM NOT ILLUSTRATED

FIG. ITEM	PART NUMBER	AIRLINE STOCK NUMBER	NOMENCLATURE 1234567	EFF CODE	UNITS PER ASSY
-001K	D2549030613464		. WALL-REAR NP PRE VSB A2-254-25-130 used on 030E (25415141L), 030H (25415141N), 030B(25415141P), 030B (25415141R), 030B (25415141S), 030A(25415141T), 030C (25415141U) SEE 25-41-51-41L FOR NHA SEE 25-41-51-41N FOR NHA SEE 25-41-51-41P FOR NHA SEE 25-41-51-41R FOR NHA SEE 25-41-51-41S FOR NHA SEE 25-41-51-41T FOR NHA SEE 25-41-51-41U FOR NHA		RF
-001L	D2549020512464		. WALL-REAR NP used on 030G (25415141N) SEE 25-41-51-41N FOR NHA		RF
-001M	D2549020802664		. WALL-REAR NP used on 030A (25415141S), 030B (25415141U) SEE 25-41-51-41S FOR NHA SEE 25-41-51-41U FOR NHA		RF
-001N	D2547161903064		. WALL-REAR NP POST SB 25-1742 used on 030J (25415101G) SEE 25-41-51-01G FOR NHA		RF
-001P	R22540119605264		. WALL-REAR NP POST VSB A2-254-25-130 used on 030E (25415141R) SEE 25-41-51-41R FOR NHA		RF
010A	A225401241-738		. . WALL ASSY-REAR used on 001A		001
-010B	A225401241-726		. . WALL ASSY-REAR used on 001B		001

- ITEM NOT ILLUSTRATED

FIG. ITEM	PART NUMBER	AIRLINE STOCK NUMBER	NOMENCLATURE 1234567	EFF CODE	UNITS PER ASSY
-010C	A225401241-740		. . WALL ASSY-REAR used on 001C		001
-010D	A225401241-732		. . WALL ASSY-REAR used on 001D		001
-010E	A225401241-502		. . WALL ASSY-REAR used on 001E		001
-010F	A225401241-700		. . WALL ASSY-REAR POST SB 25-1742 used on 001F, 001N		001
-010G	A225401242-504		. . WALL ASSY-REAR used on 001G		001
-010H	A225401242-500		. . WALL ASSY-REAR PRE VSB A2-254-25-130 used on 001H, 001K, 001M		001
-010J	A225401242-526		. . WALL ASSY-REAR used on 001J		001
-010K	A225401242-532		. . WALL ASSY-REAR used on 001L		001
-010L	A225401242-538		. . WALL ASSY-REAR POST VSB A2-254-25-130 used on 001P		001
-020A	NSA935405-01		. . . MOUNT USE AS REQUIRED used on 010A, 010B, 010C, 010D, 010E, 010F, 010G, 010H, 010J, 010K, 010L		AR
-030A	NAS1833C08-250		. . . INSERT used on 010A, 010B, 010C, 010D, 010E, 010F, 010G, 010H, 010J, 010K, 010L		018

- ITEM NOT ILLUSTRATED

FIG. ITEM	PART NUMBER	AIRLINE STOCK NUMBER	NOMENCLATURE 1234567	EFF CODE	UNITS PER ASSY
-040A	NSA5345-08C		. . . INSERT used on 010A, 010B, 010C, 010D, 010E, 010F, 010G, 010H, 010J, 010K, 010L		004
-050A	EF1840-08CM		. . . INSERT used on 010A, 010B, 010C, 010D, 010E, 010F, 010G, 010H, 010J, 010K, 010L		008
060A	NAS1096-3-7		. . SCREW BUY PN NAS1801-3-7 used on 001A, 001B, 001C, 001D, 001E, 001F, 001G, 001H, 001J, 001K, 001L, 001M, 001N, 001P		012
070A	DAN298-4030		. . SCREW used on 001A, 001B, 001C, 001D, 001E, 001F, 001G, 001H, 001J, 001K, 001L, 001P		013
-070B	NAS1096-3-12		. . SCREW BUY PN NAS1801-3-12 used on 001M, 001N		013
080A	ASNA0113-48ADL		. . WASHER used on 001A, 001B, 001C, 001D, 001E, 001F, 001G, 001H, 001J, 001K, 001L, 001M, 001N, 001P		025
090A	A3-929-0001-01		. . SWITCH ASSY-TOILET used on 001A, 001C, 001D, 001E, 001G, 001K, 001L, 001M, 001N, 001P		001
-090B	A392900190-000		. . SWITCH ASSY-TOILET used on 001B, 001J		001

- ITEM NOT ILLUSTRATED

FIG. ITEM	PART NUMBER	AIRLINE STOCK NUMBER	NOMENCLATURE 1234567	EFF CODE	UNITS PER ASSY
-090C	A392900190-002		. . SWITCH ASSY-TOILET used on 001F, 001H		001
095A	774-081-31		. . . FRAME used on 090A, 090B, 090C		001
100A	774-101-79		. . . PLATE-FRONT used on 090A		001
-100B	1001291		. . . PLATE-FRONT used on 090B		001
-100C	1001289		. . . PLATE-FRONT used on 090C		001
110A	774-101-81		. . . . FOIL-FRONT used on 100A		001
-110B	1001281		. . . . FOIL-FRONT used on 100B		001
-110C	1001278		. . . . FOIL-FRONT used on 100C		001
120A	NAS1102-08-16		. . SCREW used on 001A, 001B, 001C, 001D, 001E, 001F, 001G, 001H, 001J, 001K, 001L, 001M, 001P		004
-120B	NAS1102-08-5		. . SCREW used on 001N		004
130A	A225401245-522		. . SPACER POST VSB A2-254-25-130 used on 001A, 001P		001
-130B	A225401245-512		. . SPACER used on 001B, 001J		001
-130C	A225401245-526		. . SPACER used on 001C		001

- ITEM NOT ILLUSTRATED

FIG. ITEM	PART NUMBER	AIRLINE STOCK NUMBER	NOMENCLATURE 1234567	EFF CODE	UNITS PER ASSY
-130D	A225401245-524		. . SPACER used on 001D, 001L		001
-130E	A225401245-506		. . SPACER POST SB 25-1214 used on 001E, 001G		001
-130F	A225401245-502		. . SPACER PRE VSB A2-254-25-130 used on 001F, 001H, 001K, 001M		001

- ITEM NOT ILLUSTRATED

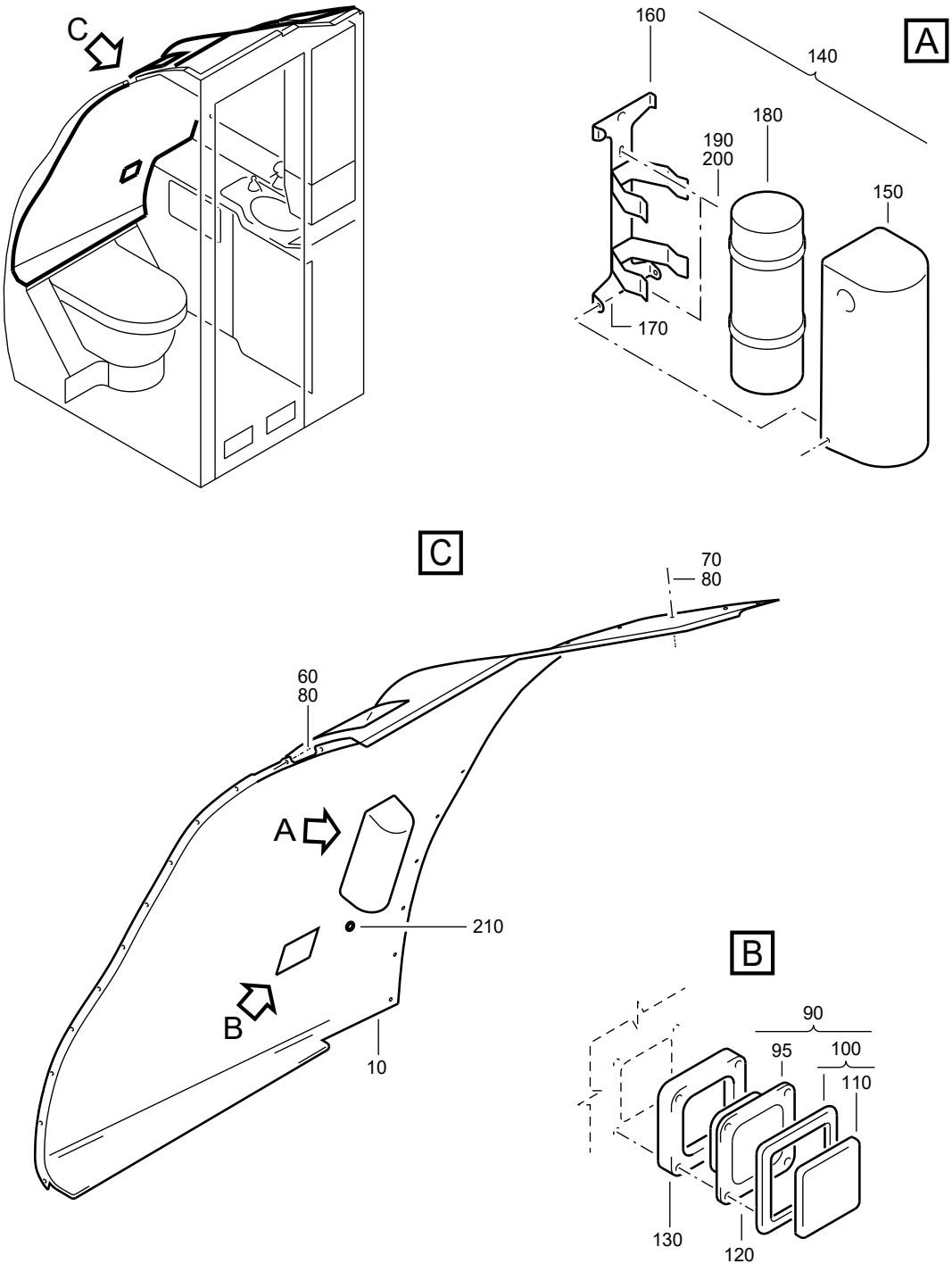

F_PL_254151_05_D_01_00

WALL-REAR
Figure 05D/EN254151SHEET05D01

FIG. ITEM	PART NUMBER	AIRLINE STOCK NUMBER	NOMENCLATURE 1234567	EFF CODE	UNITS PER ASSY
05D					
-001A	D2549010600264		. WALL-REAR NP used on 030E (25415101Q), 030D (25415101S), 030C (25415101U), 030B (25415101V), 030B (25415101Z), 030D(25415141A), 030C (25415141D), 030B (25415141F), 030C(25415141H), 030C (25415141J), 030C (25415141L) SEE 25-41-51-01Q FOR NHA SEE 25-41-51-01S FOR NHA SEE 25-41-51-01U FOR NHA SEE 25-41-51-01V FOR NHA SEE 25-41-51-01Z FOR NHA SEE 25-41-51-41A FOR NHA SEE 25-41-51-41D FOR NHA SEE 25-41-51-41F FOR NHA SEE 25-41-51-41H FOR NHA SEE 25-41-51-41J FOR NHA SEE 25-41-51-41L FOR NHA		RF
-001B	D2549030509464		. WALL-REAR NP used on 030D (25415101Q), 030B (25415101Y), 030E (25415141B), 030E (25415141D), 030E (25415141G), 030D (25415141H), 030D (25415141M) SEE 25-41-51-01Q FOR NHA SEE 25-41-51-01Y FOR NHA SEE 25-41-51-41B FOR NHA SEE 25-41-51-41D FOR NHA SEE 25-41-51-41G FOR NHA SEE 25-41-51-41H FOR NHA SEE 25-41-51-41M FOR NHA		RF

- ITEM NOT ILLUSTRATED

FIG. ITEM	PART NUMBER	AIRLINE STOCK NUMBER	NOMENCLATURE 1234567	EFF CODE	UNITS PER ASSY
-001C	D2549020614864		. WALL-REAR NP used on 030D (25415101T), 030A (25415101W), 030F(25415101Y), 030B (254151410), 030C (25415141A), 030D(25415141F), 030B (25415141H), 030F (25415141J), 030B(25415141M) SEE 25-41-51-01T FOR NHA SEE 25-41-51-01W FOR NHA SEE 25-41-51-01Y FOR NHA SEE 25-41-51-410 FOR NHA SEE 25-41-51-41A FOR NHA SEE 25-41-51-41F FOR NHA SEE 25-41-51-41H FOR NHA SEE 25-41-51-41J FOR NHA SEE 25-41-51-41M FOR NHA		RF
-001D	D2549010609464		. WALL-REAR NP used on 030B (25415141N), 030A (25415141Q), 030A (25415141U) SEE 25-41-51-41N FOR NHA SEE 25-41-51-41Q FOR NHA SEE 25-41-51-41U FOR NHA		RF
-001E	D2549020711664		. WALL-REAR NP used on 030F (25415141N) SEE 25-41-51-41N FOR NHA		RF
010A	A225401241-784		. . WALL ASSY-REAR used on 001A		001
010B	A225401241-754		. . WALL ASSY-REAR used on 001B		001
010C	A225401241-750		. . WALL ASSY-REAR used on 001C		001
010D	A225401242-600		. . WALL ASSY-REAR used on 001D, 001E		001

- ITEM NOT ILLUSTRATED

FIG. ITEM	PART NUMBER	AIRLINE STOCK NUMBER	NOMENCLATURE 1234567	EFF CODE	UNITS PER ASSY
-020A	NSA935405-01		. . . MOUNT used on 010A, 010B, 010C, 010D		035
-030A	NAS1833C08-250		. . . INSERT used on 010A, 010B, 010C, 010D		016
-040A	NSA5345-08C		. . . INSERT used on 010A, 010B, 010C, 010D		004
-050A	EF1840-08CM		. . . INSERT used on 010A, 010B, 010C, 010D		008
060A	NAS1096-3-7		. . SCREW BUY PN NAS1801-3-7 used on 001A, 001B, 001C, 001D, 001E		012
070A	DAN298-4030		. . SCREW used on 001A, 001B, 001C, 001D, 001E		013
080A	ASNA0113-48ADL		. . WASHER used on 001A, 001B, 001C, 001D, 001E		025
090A	A3-929-0001-01		. . SWITCH ASSY-TOILET used on 001A, 001B, 001C, 001D, 001E		001
095A	774-081-31		. . . FRAME used on 090A		001
100A	774-101-79		. . . PLATE-FRONT used on 090A		001
110A	774-101-81		. . . . FOIL-FRONT used on 100A		001

- ITEM NOT ILLUSTRATED

FIG. ITEM	PART NUMBER	AIRLINE STOCK NUMBER	NOMENCLATURE 1234567	EFF CODE	UNITS PER ASSY
120A	NAS1102-08-16		. . SCREW used on 001A, 001B, 001C, 001D, 001E		004
130A	A225401245-520		. . SPACER used on 001A		001
-130B	A225401245-506		. . SPACER used on 001B		001
-130C	A225401245-502		. . SPACER used on 001C, 001D, 001E		001
140A	A325400460-518		. . DISPENSER-PLASTIC CUP used on 001A		001
-140B	A325400460-512		. . DISPENSER-PLASTIC CUP used on 001B		001
-140C	A325400460-500		. . DISPENSER-PLASTIC CUP used on 001C, 001D		001
150A	A325400461-518		. . . COVER-PLASTIC CUP DISPENSER used on 140A		001
-150B	A325400461-512		. . . COVER-PLASTIC CUP DISPENSER used on 140B		001
-150C	A325400461-500		. . . COVER-PLASTIC CUP DISPENSER used on 140C		001
160A	A325400463-000		. . . HOLDER-PLASTIC CUP DISPENSER used on 140A, 140B, 140C		001
170A	DIN6799RS4		. . . WASHER-RETAINING used on 140A, 140B, 140C		002

- ITEM NOT ILLUSTRATED

FIG. ITEM	PART NUMBER	AIRLINE STOCK NUMBER	NOMENCLATURE 1234567	EFF CODE	UNITS PER ASSY
180A	A325400462-200		. . . TUBE used on 140A, 140B, 140C		001
190A	NAS1096-2-4		. . SCREW BUY PN NAS1801-08-4 used on 001A, 001B, 001C, 001D		002
200A	NAS1149CN832R		. . WASHER used on 001A, 001B, 001C, 001D		002
210A	0-182-005700000		. . BUMPER used on 001A, 001B, 001C, 001D		001

- ITEM NOT ILLUSTRATED

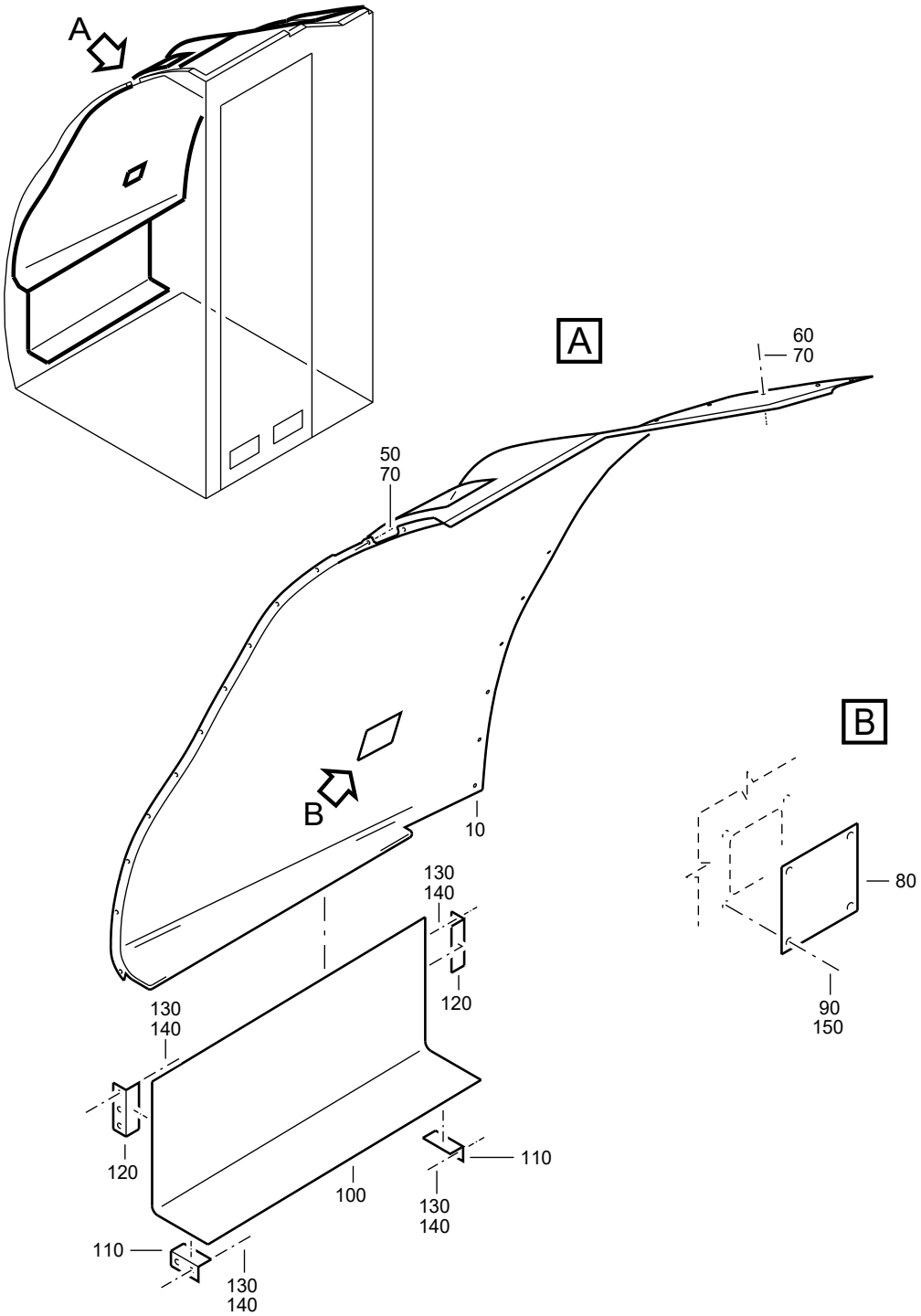

F_PL_254151_05_E_01_00

WALL-REAR
Figure 05E/EN254151SHEET05E01

FIG. ITEM	PART NUMBER	AIRLINE STOCK NUMBER	NOMENCLATURE 1234567	EFF CODE	UNITS PER ASSY
05E					
-001A	D2549020712064		. WALL-REAR NP used on 030A (25415141E) SEE 25-41-51-41E FOR NHA		RF
010A	A225401241-700		. . WALL ASSY-REAR used on 001A		001
-020A	NSA935405-01		. . . MOUNT used on 010A		035
-030A	NAS1833C08-250		. . . INSERT used on 010A		015
-040A	EF1840-08CM		. . . INSERT used on 010A		008
050A	NAS1096-3-7		. . SCREW BUY PN NAS1801-3-7 used on 001A		012
060A	DAN298-4030		. . SCREW used on 001A		013
070A	ASNA0113-48ADL		. . WASHER used on 001A		025
080A	A225401238-510		. . COVER ASSY used on 001A		001
090A	NAS1102-08-16		. . SCREW used on 001A		004
100A	A225401238-504		. . PANEL ASSY-LINING,REAR WALL used on 001A		001
110A	A225401238-202		. . ANGLE-L used on 001A		002

- ITEM NOT ILLUSTRATED

FIG. ITEM	PART NUMBER	AIRLINE STOCK NUMBER	NOMENCLATURE 1234567	EFF CODE	UNITS PER ASSY
120A	A225401238-204		. . ANGLE-L used on 001A		002
130A	NAS1096-2-9		. . SCREW BUY PN NAS1801-08-9 used on 001A		016
140A	ASNA0113-40ADL		. . WASHER used on 001A		016
150A	0-123-000700000		. . WASHER used on 001A		004

- ITEM NOT ILLUSTRATED

THIS PAGE IS INTENTIONALLY LEFT BLANK

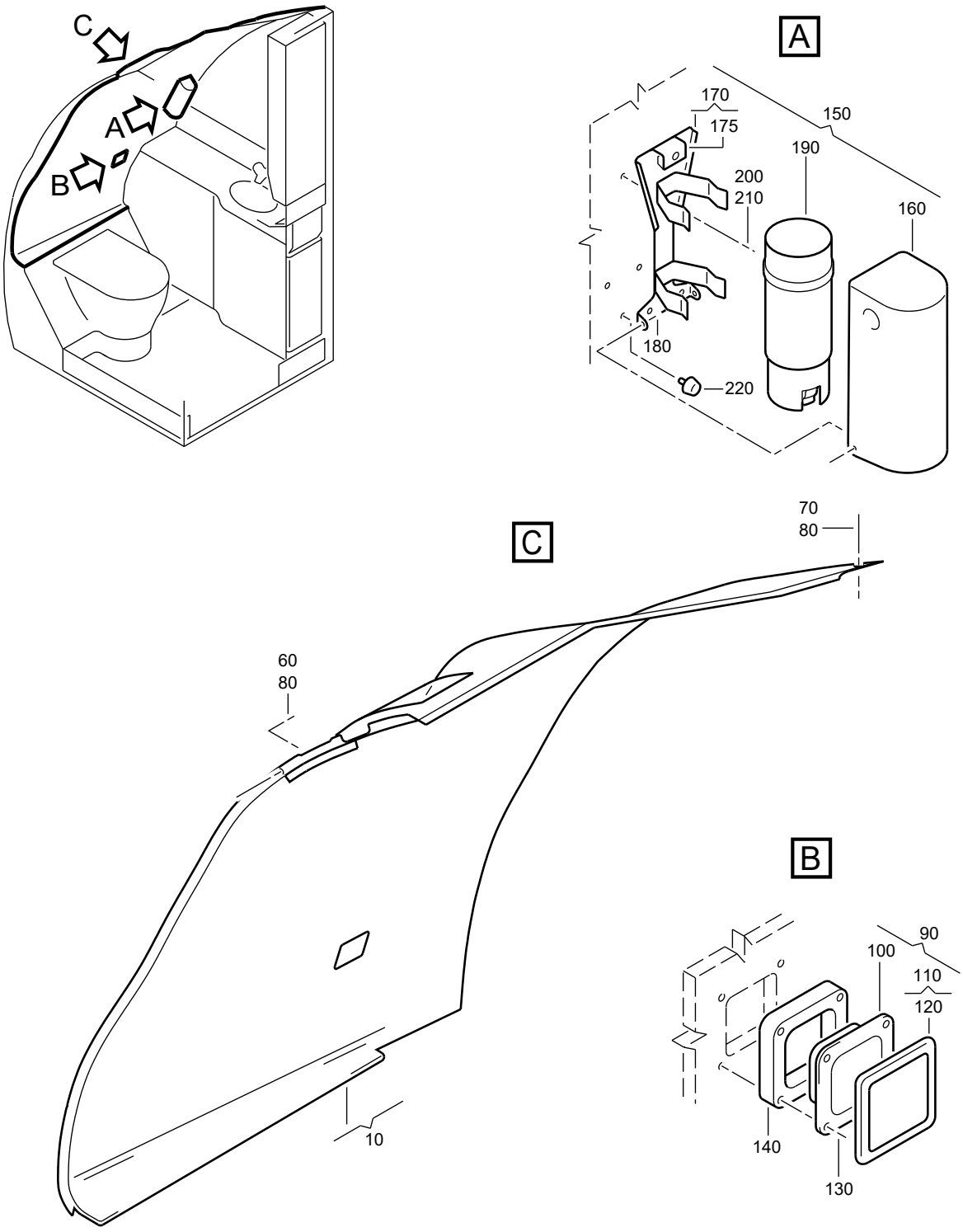

F_PL_254151_05_F_01_01

WALL-REAR
Figure 05F/EN254151SHEET05F01

FIG. ITEM	PART NUMBER	AIRLINE STOCK NUMBER	NOMENCLATURE 1234567		EFF CODE	UNITS PER ASSY
05F						
-001A	D2549030613264		. WALL-REAR used on 030D (25415141N) SEE 25-41-51-41N FOR NHA	NP		RF
-001B	D2549030403664		. WALL-REAR used on 030E (25415141W), 030D (25415141X) SEE 25-41-51-41W FOR NHA SEE 25-41-51-41X FOR NHA	NP		RF
-001C	D2549020806864		. WALL-REAR used on 030C (25415141Z) SEE 25-41-51-41Z FOR NHA	NP		RF

- ITEM NOT ILLUSTRATED

FIG. ITEM	PART NUMBER	AIRLINE STOCK NUMBER	NOMENCLATURE 1234567	EFF CODE	UNITS PER ASSY
-001D	D2549030406464		. WALL-REAR NP PRE VSB A2-254-25-106 used on 030C (25415142A), 030C (25415142C), 030D (25415142D), 030E (25415142E), 030A (25415142G), 030C (25415142H), 030E (25415142J), 030E (25415142K), 030A (25415142L), 030B (25415142N), 030A (25415142Q), 030G (25415142R), 030C (25415142S), 030E (25415142T), 030E(25415142U) SEE 25-41-51-42A FOR NHA SEE 25-41-51-42C FOR NHA SEE 25-41-51-42D FOR NHA SEE 25-41-51-42E FOR NHA SEE 25-41-51-42G FOR NHA SEE 25-41-51-42H FOR NHA SEE 25-41-51-42J FOR NHA SEE 25-41-51-42K FOR NHA SEE 25-41-51-42L FOR NHA SEE 25-41-51-42N FOR NHA SEE 25-41-51-42Q FOR NHA SEE 25-41-51-42R FOR NHA SEE 25-41-51-42S FOR NHA SEE 25-41-51-42T FOR NHA SEE 25-41-51-42U FOR NHA		RF
-001E	D2549030410264		. WALL-REAR NP used on 030C (25415142F), 030A (25415142R), 030B(25415142T), 030C (25415142U) SEE 25-41-51-42F FOR NHA SEE 25-41-51-42R FOR NHA SEE 25-41-51-42T FOR NHA SEE 25-41-51-42U FOR NHA		RF

- ITEM NOT ILLUSTRATED

FIG. ITEM	PART NUMBER	AIRLINE STOCK NUMBER	NOMENCLATURE 1234567		EFF CODE	UNITS PER ASSY
-001F	D2549010402464		. WALL-REAR used on 030E (25415142N), 030D (25415142T) SEE 25-41-51-42N FOR NHA SEE 25-41-51-42T FOR NHA	NP		RF
-001G	D2549030414664		. WALL-REAR used on 030G (25415142N), 030E (25415142S) SEE 25-41-51-42N FOR NHA SEE 25-41-51-42S FOR NHA	NP		RF
-001H	D2549030702064		. WALL-REAR used on 030H (25415142R) SEE 25-41-51-42R FOR NHA	NP		RF
-001J	D2549030703264		. WALL-REAR used on 030F (25415142U) SEE 25-41-51-42U FOR NHA	NP		RF
-001K	D2547161202864		. WALL-REAR POST SB 25-1674 used on 030J (25415141M), 030J (25415142N) SEE 25-41-51-41M FOR NHA SEE 25-41-51-42N FOR NHA	NP		RF
-001L	R22540166200064		. WALL-REAR POST VSB A2-254-25-106 used on 030D (25415142C), 030H (25415142G), 030E (25415142L), 030G (25415142T) SEE 25-41-51-42C FOR NHA SEE 25-41-51-42G FOR NHA SEE 25-41-51-42L FOR NHA SEE 25-41-51-42T FOR NHA	NP		RF
010A	A225401242-604		. . WALL ASSY-REAR used on 001A			001

- ITEM NOT ILLUSTRATED

FIG. ITEM	PART NUMBER	AIRLINE STOCK NUMBER	NOMENCLATURE 1234567	EFF CODE	UNITS PER ASSY
-010B	A225401242-804		. . WALL ASSY-REAR used on 001B		001
-010C	A225401242-800		. . WALL ASSY-REAR used on 001C		001
-010D	A225401246-600		. . WALL ASSY-REAR PRE VSB A2-254-25-106 used on 001D		001
-010E	A225401246-638		. . WALL ASSY-REAR used on 001E		001
-010F	A225401246-800		. . WALL ASSY-REAR used on 001F		001
-010G	A225401246-644		. . WALL ASSY-REAR used on 001G		001
-010H	A225401246-646		. . WALL ASSY-REAR used on 001H		001
-010J	A225401246-806		. . WALL ASSY-REAR used on 001J		001
-010K	A225401246-744		. . WALL ASSY-REAR POST SB 25-1674 used on 001K		001
-010L	A225401246-650		. . WALL ASSY-REAR POST VSB A2-254-25-106 used on 001L		001
-020A	NSA935405-01		. . . MOUNT used on 010A, 010B, 010C, 010D, 010E, 010F, 010G, 010H, 010J, 010K, 001L		035

- ITEM NOT ILLUSTRATED

FIG. ITEM	PART NUMBER	AIRLINE STOCK NUMBER	NOMENCLATURE 1234567	EFF CODE	UNITS PER ASSY
-030A	NAS1833C08-250		. . . INSERT USAGE RANGE FROM 013 TO 029 used on 010A, 010B, 010C, 010D, 010E, 010F, 010G, 010H, 010J, 010K, 010L		021
-040A	NSA5345-08C		. . . INSERT used on 010A, 010B, 010C, 010D, 010E, 010F, 010G, 010H, 010J, 010K, 010L		004
-050A	EF1840-08CM		. . . INSERT USAGE RANGE FROM 008 TO 016 used on 010A, 010B, 010C, 010D, 010E, 010F, 010G, 010H, 010J, 010K, 010L		012
060A	NAS1801-3-7		. . SCREW used on 001A, 001B, 001C, 001D, 001E, 001F, 001G, 001H, 001J, 001K, 001L		012
070A	DAN298-4030		. . SCREW used on 001A, 001B, 001C, 001D, 001E, 001F, 001G, 001H, 001J, 001K, 001L		013
080A	ASNA0113-48ADL		. . WASHER used on 001A, 001B, 001C, 001D, 001E, 001F, 001G, 001H, 001J, 001K, 001L		025
090A	A3-929-0001-01		. . SWITCH ASSY-TOILET used on 001A, 001B, 001C, 001D, 001E, 001F, 001G, 001H, 001J, 001K, 001L		001

- ITEM NOT ILLUSTRATED

FIG. ITEM	PART NUMBER	AIRLINE STOCK NUMBER	NOMENCLATURE 1234567	EFF CODE	UNITS PER ASSY
100A	774-081-31		. . . FRAME used on 090A		001
110A	774-101-79		. . . PLATE-FRONT used on 090A		001
120A	774-101-81		. . . . FOIL-FRONT used on 110A		001
130A	NAS1102-08-16		. . SCREW used on 001A, 001B, 001C, 001D, 001E, 001F, 001G, 001H, 001J, 001K, 001L		004
140A	A225401245-506		. . SPACER used on 001A, 001B		001
-140B	A225401245-502		. . SPACER PRE VSB A2-254-25-106 used on 001C, 001D, 001F		001
-140C	A225401245-522		. . SPACER POST SB 25-1674 used on 001E, 001J, 001K		001
-140D	A225401245-534		. . SPACER used on 001G		001
-140E	A225401245-510		. . SPACER used on 001H		001
-140F	A225401245-542		. . SPACER POST VSB A2-254-25-106 used on 001L		001
150A	A325400460-512		. . DISPENSER-PLASTIC CUP used on 001A, 001B		001
-150B	A325400460-500		. . DISPENSER-PLASTIC CUP PRE VSB A2-254-25-106 used on 001C, 001D, 001F		001

- ITEM NOT ILLUSTRATED

FIG. ITEM	PART NUMBER	AIRLINE STOCK NUMBER	NOMENCLATURE 1234567	EFF CODE	UNITS PER ASSY
-150C	A325400460-528		. . DISPENSER-PLASTIC CUP POST SB 25-1674 used on 001E, 001J, 001K		001
-150D	A325400460-530		. . DISPENSER-PLASTIC CUP used on 001G		001
-150E	A325400460-532		. . DISPENSER-PLASTIC CUP used on 001H		001
-150F	A325400460-540		. . DISPENSER-PLASTIC CUP POST VSB A2-254-25-106 used on 001L		001
160A	A325400461-512		. . . COVER-PLASTIC CUP DISPENSER used on 150A		001
-160B	A325400461-500		. . . COVER-PLASTIC CUP DISPENSER used on 150B, 150F		001
-160C	A325400461-526		. . . COVER-PLASTIC CUP DISPENSER used on 150C		001
-160D	A325400461-528		. . . COVER-PLASTIC CUP DISPENSER used on 150D		001
-160E	A325400461-530		. . . COVER-PLASTIC CUP DISPENSER used on 150E		001
170A	A325400463-000		. . . HOLDER-PLASTIC CUP DISPENSER used on 150A, 150B, 150C, 150D, 150E, 150F		001
175A	C1117		. . . . RECEPTACLE used on 170A		001

- ITEM NOT ILLUSTRATED

FIG. ITEM	PART NUMBER	AIRLINE STOCK NUMBER	NOMENCLATURE 1234567	EFF CODE	UNITS PER ASSY
180A	DIN6799RS4		. . . WASHER-RETAINING used on 150A, 150B, 150C, 150D, 150E, 150F		002
190A	A325400462-200		. . . TUBE used on 150A, 150B, 150C, 150D, 150E, 150F		001
200A	NAS1801-08-4		. . SCREW PRE VSB A2-254-25-106 used on 001A, 001B, 001C, 001D, 001E, 001F, 001G, 001H, 001J, 001K		003
-200B	NAS1801-08-7		. . SCREW POST VSB A2-254-25-106 used on 001L		003
210A	NAS1149CN832R		. . WASHER used on 001A, 001B, 001C, 001D, 001E, 001F, 001G, 001H, 001J, 001K, 001L		003
220A	0-182-005700000		. . BUMPER used on 001A, 001B, 001C, 001D, 001E, 001F, 001G, 001H, 001J, 001K, 001L		001
-230A	NAS1833C08-250		. . INSERT POST SB 25-1674 used on 001K		003

- ITEM NOT ILLUSTRATED

THIS PAGE IS INTENTIONALLY LEFT BLANK

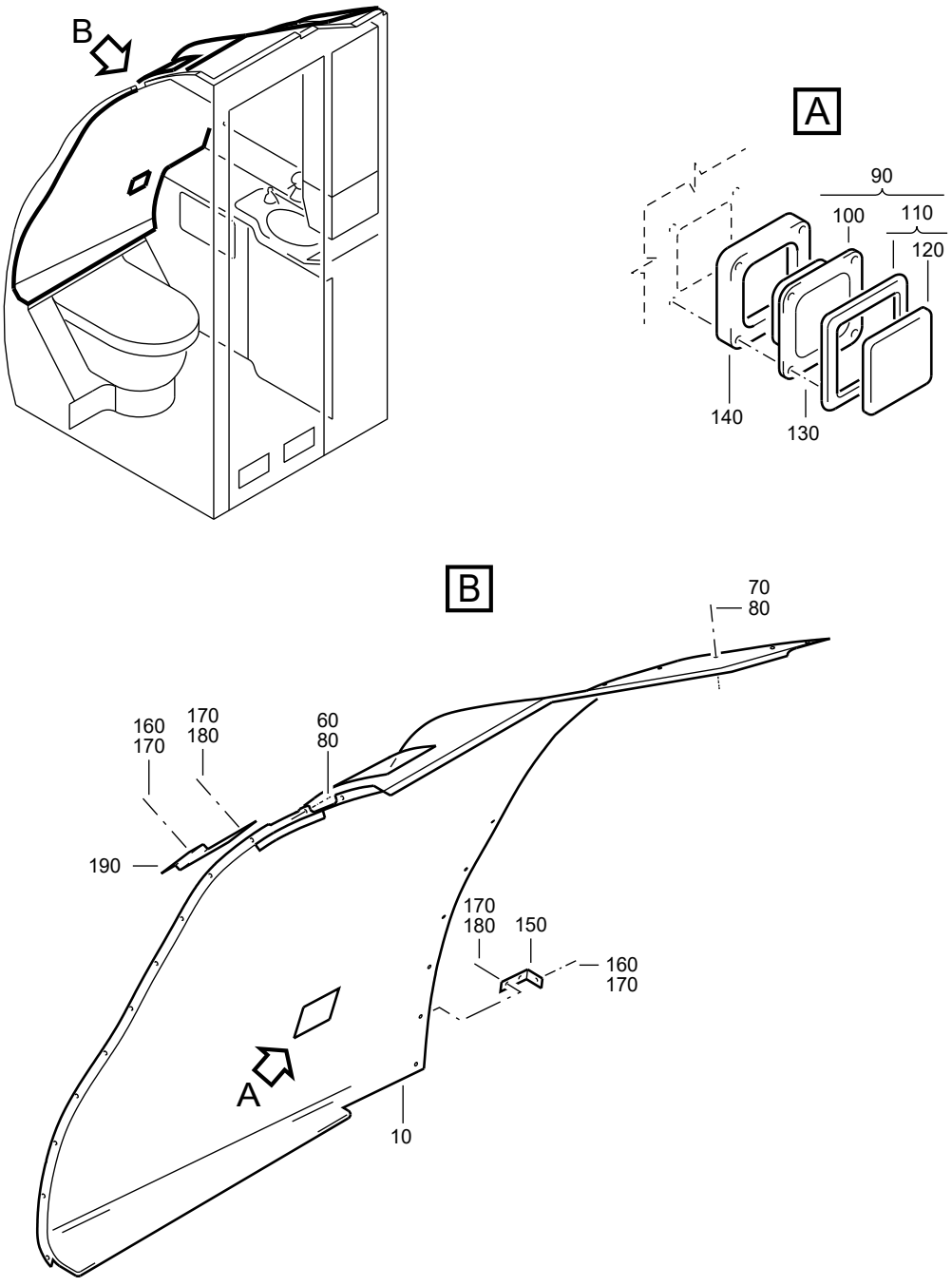

F_PL_254151_05_G_01_00

WALL-REAR
Figure 05G/EN254151SHEET05G01

FIG. ITEM	PART NUMBER	AIRLINE STOCK NUMBER	NOMENCLATURE 1234567	EFF CODE	UNITS PER ASSY
05G					
-001A	D2549020510664		. WALL-REAR NP used on 030C (25415141R) SEE 25-41-51-41R FOR NHA		RF
-001B	D2549010610264		. WALL-REAR NP used on 030J (25415141N), 030A (25415141R) SEE 25-41-51-41N FOR NHA SEE 25-41-51-41R FOR NHA		RF
-001C	D2549030614664		. WALL-REAR NP used on 030A (25415141P) SEE 25-41-51-41P FOR NHA		RF
-001D	D2549030603264		. WALL-REAR NP PRE VSB A2-254-25-130 used on 030A (25415141V), 030A (25415141W), 030A(25415141X), 030B (25415141Y), 030A (25415141Z), 030C(254151420), 030A (25415142A), 030B (25415142B) SEE 25-41-51-41V FOR NHA SEE 25-41-51-41W FOR NHA SEE 25-41-51-41X FOR NHA SEE 25-41-51-41Y FOR NHA SEE 25-41-51-41Z FOR NHA SEE 25-41-51-420 FOR NHA SEE 25-41-51-42A FOR NHA SEE 25-41-51-42B FOR NHA		RF
-001E	D2549020809464		. WALL-REAR NP used on 030B (25415141W), 030B (25415141X), 030B (254151420) SEE 25-41-51-41W FOR NHA SEE 25-41-51-41X FOR NHA SEE 25-41-51-420 FOR NHA		RF

- ITEM NOT ILLUSTRATED

FIG. ITEM	PART NUMBER	AIRLINE STOCK NUMBER	NOMENCLATURE 1234567		EFF CODE	UNITS PER ASSY
-001F	D2549010612064		. WALL-REAR used on 030C (25415141W) SEE 25-41-51-41W FOR NHA	NP		RF
-001G	D2549030403464		. WALL-REAR used on 030D (25415141W), 030C (25415141X) SEE 25-41-51-41W FOR NHA SEE 25-41-51-41X FOR NHA	NP		RF
-001H	D2549020804064		. WALL-REAR used on 030B (25415141V), 030C (25415141Y), 030B (25415141Z) SEE 25-41-51-41V FOR NHA SEE 25-41-51-41Y FOR NHA SEE 25-41-51-41Z FOR NHA	NP		RF
-001J	D2549020802464		. WALL-REAR used on 030C (25415141V), 030D (25415141Y) SEE 25-41-51-41V FOR NHA SEE 25-41-51-41Y FOR NHA	NP		RF
-001K	D2549030606064		. WALL-REAR used on 030F (25415141H), 030G (25415141J) SEE 25-41-51-41H FOR NHA SEE 25-41-51-41J FOR NHA	NP		RF
-001L	D2549020807664		. WALL-REAR used on 030A (25415141Y) SEE 25-41-51-41Y FOR NHA	NP		RF
-001M	D2549030407264		. WALL-REAR used on 030E (254151420) SEE 25-41-51-420 FOR NHA	NP		RF

- ITEM NOT ILLUSTRATED

FIG. ITEM	PART NUMBER	AIRLINE STOCK NUMBER	NOMENCLATURE 1234567	EFF CODE	UNITS PER ASSY
-001N	R22540119605464		. WALL-REAR NP POST VSB A2-254-25-130 used on 030F (25415141R), 030F (25415141W), 030E (25415141X), 030G (254151420) SEE 25-41-51-41R FOR NHA SEE 25-41-51-41W FOR NHA SEE 25-41-51-41X FOR NHA SEE 25-41-51-420 FOR NHA		RF
010A	A225401242-540		. . WALL ASSY-REAR used on 001A		001
-010B	A225401242-536		. . WALL ASSY-REAR used on 001B		001
-010C	A225401242-538		. . WALL ASSY-REAR used on 001C		001
-010D	A225401242-700		. . WALL ASSY-REAR PRE VSB A2-254-25-130 used on 001D, 001H, 001K		001
-010E	A225401242-732		. . WALL ASSY-REAR used on 001E		001
-010F	A225401242-726		. . WALL ASSY-REAR used on 001F		001
-010G	A225401242-704		. . WALL ASSY-REAR used on 001G		001
-010H	A225401242-740		. . WALL ASSY-REAR used on 001J		001
-010J	A225401242-900		. . WALL ASSY-REAR used on 001L		001
-010K	A225401246-532		. . WALL ASSY-REAR used on 001M		001

- ITEM NOT ILLUSTRATED

FIG. ITEM	PART NUMBER	AIRLINE STOCK NUMBER	NOMENCLATURE 1234567	EFF CODE	UNITS PER ASSY
-010L	A225401242-738		. . WALL ASSY-REAR POST VSB A2-254-25-130 used on 001N		001
-020A	NSA935405-01		. . . MOUNT used on 010A, 010B, 010C, 010D, 010E, 010F, 010G, 010H, 010J, 010K, 010L		035
-030A	NAS1833C08-250		. . . INSERT used on 010A, 010B, 010C, 010D, 010E, 010F, 010G, 010H, 010J, 010K, 010L		018
-040A	NSA5345-08C		. . . INSERT used on 010A, 010B, 010C, 010D, 010E, 010F, 010G, 010H, 010J, 010K, 010L		004
-050A	EF1840-08CM		. . . INSERT used on 010A, 010B, 010C, 010D, 010E, 010F, 010G, 010H, 010J, 010K, 010L		008
060A	NAS1096-3-7		. . SCREW BUY PN NAS1801-3-7 used on 001A, 001B, 001C, 001D, 001E, 001F, 001G, 001H, 001J, 001K, 001L, 001M, 001N		012
070A	DAN298-4030		. . SCREW used on 001A, 001B, 001C, 001D, 001E, 001F, 001G, 001H, 001J, 001K, 001L, 001M, 001N		013
080A	ASNA0113-48ADL		. . WASHER used on 001A, 001B, 001C, 001D, 001E, 001F, 001G, 001H, 001J, 001K, 001L, 001M, 001N		025

- ITEM NOT ILLUSTRATED

FIG. ITEM	PART NUMBER	AIRLINE STOCK NUMBER	NOMENCLATURE 1234567	EFF CODE	UNITS PER ASSY
090A	A3-929-0001-01		. . SWITCH ASSY-TOILET used on 001A, 001B, 001C, 001D, 001E, 001G, 001J, 001K, 001L, 001M, 001N		001
-090B	A392900190-000		. . SWITCH ASSY-TOILET used on 001F		001
-090C	A392900190-002		. . SWITCH ASSY-TOILET used on 001H		001
100A	774-081-31		. . . FRAME used on 090A, 090B, 090C		001
110A	774-101-79		. . . PLATE-FRONT used on 090A		001
-110B	1001291		. . . PLATE-FRONT used on 090B		001
-110C	1001289		. . . PLATE-FRONT used on 090C		001
120A	774-101-81		. . . . FOIL-FRONT used on 110A		001
-120B	1001281		. . . . FOIL-FRONT used on 110B		001
-120C	1001278		. . . . FOIL-FRONT used on 110C		001
130A	NAS1102-08-16		. . SCREW used on 001A, 001B, 001C, 001D, 001E, 001F, 001G, 001H, 001J, 001K, 001L, 001M, 001N		004
140A	A225401245-526		. . SPACER used on 001A, 001J		001

- ITEM NOT ILLUSTRATED

FIG. ITEM	PART NUMBER	AIRLINE STOCK NUMBER	NOMENCLATURE 1234567	EFF CODE	UNITS PER ASSY
-140B	A225401245-500		. . SPACER used on 001B		001
-140C	A225401245-522		. . SPACER POST VSB A2-254-25-130 used on 001C, 001N		001
-140D	A225401245-502		. . SPACER PRE VSB A2-254-25-130 used on 001D, 001H, 001K, 001L		001
-140E	A225401245-524		. . SPACER used on 001E, 001M		001
-140F	A225401245-512		. . SPACER used on 001F		001
-140G	A225401245-506		. . SPACER used on 001G		001
150A	A225401236-204		. . ANGLE POST SB 25-1287 used on 001K		001
160A	NAS1096-3-7		. . SCREW POST SB 25-1287 BUY PN NAS1801-3-7 used on 001K		004
170A	NAS1149C0332R		. . WASHER POST SB 25-1287 used on 001K		011
180A	NAS1096-3-5		. . SCREW POST SB 25-1287 BUY PN NAS1801-3-5 used on 001K		007
190A	A225401236-200		. . ANGLE POST SB 25-1287 used on 001K		001

- ITEM NOT ILLUSTRATED

THIS PAGE IS INTENTIONALLY LEFT BLANK

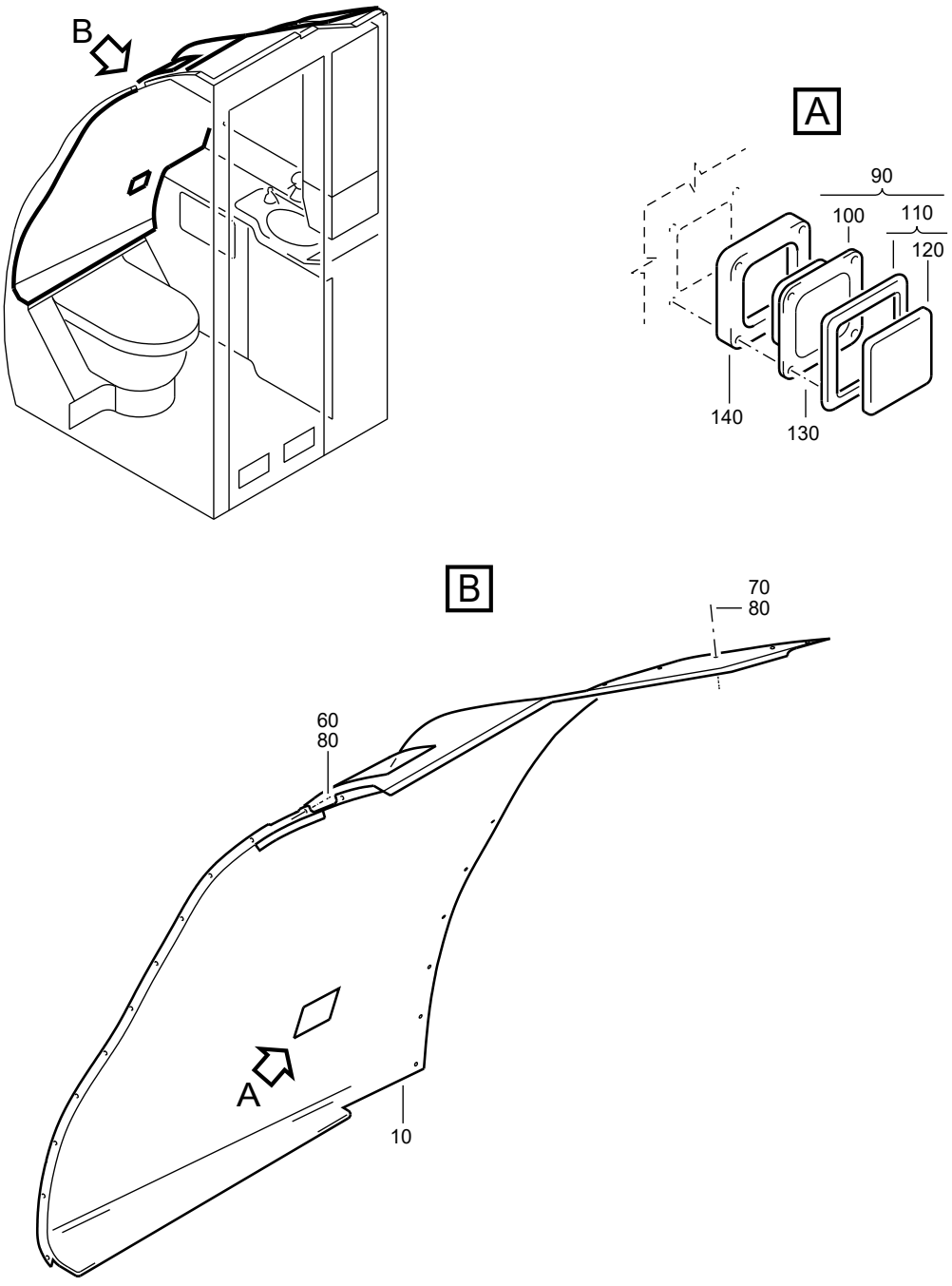

F_PL_254151_05_H_01_00

WALL-REAR
Figure 05H/EN254151SHEET05H01

FIG. ITEM	PART NUMBER	AIRLINE STOCK NUMBER	NOMENCLATURE 1234567	EFF CODE	UNITS PER ASSY
05H -001A	D2549010613264		. WALL-REAR NP POST VSB A2-254-25-130 used on 030D (25415141Z), 030H (254151420), 030F (25415142E), 0030F (25415142G), 030A(25415142H), 030F (25415142J), 030D (25415142N), 030D (25415142P), 030C (25415142Q), 030D(25415142R), 030D (25415142S) SEE 25-41-51-41Z FOR NHA SEE 25-41-51-420 FOR NHA SEE 25-41-51-42E FOR NHA SEE 25-41-51-42G FOR NHA SEE 25-41-51-42H FOR NHA SEE 25-41-51-42J FOR NHA SEE 25-41-51-42N FOR NHA SEE 25-41-51-42P FOR NHA SEE 25-41-51-42Q FOR NHA SEE 25-41-51-42R FOR NHA SEE 25-41-51-42S FOR NHA		RF

- ITEM NOT ILLUSTRATED

FIG. ITEM	PART NUMBER	AIRLINE STOCK NUMBER	NOMENCLATURE 1234567	EFF CODE	UNITS PER ASSY
-001B	D2549020805464		. WALL-REAR NP PRE VSB A2-254-25-130 used on 030E (25415141Z), 030D (254151420), 030B(25415142A), 030A (25415142B), 030A (25415142C), 030B(25415142D), 030B (25415142E), 030A (25415142F), 030E(25415142G), 030B (25415142H), 030B (25415142J), 030C(25415142K), 030B (25415142L), 030B (25415142M), 030A(25415142N), 030B (25415142P), 030B (25415142Q), 030E(25415142R), 030A (25415142S), 030A (25415142T), 030B(25415142U) SEE 25-41-51-41Z FOR NHA SEE 25-41-51-420 FOR NHA SEE 25-41-51-42A FOR NHA SEE 25-41-51-42B FOR NHA SEE 25-41-51-42C FOR NHA SEE 25-41-51-42D FOR NHA SEE 25-41-51-42E FOR NHA SEE 25-41-51-42F FOR NHA SEE 25-41-51-42G FOR NHA SEE 25-41-51-42H FOR NHA SEE 25-41-51-42J FOR NHA SEE 25-41-51-42K FOR NHA SEE 25-41-51-42L FOR NHA SEE 25-41-51-42M FOR NHA SEE 25-41-51-42N FOR NHA SEE 25-41-51-42P FOR NHA SEE 25-41-51-42Q FOR NHA SEE 25-41-51-42R FOR NHA SEE 25-41-51-42S FOR NHA SEE 25-41-51-42T FOR NHA SEE 25-41-51-42U FOR NHA		RF

- ITEM NOT ILLUSTRATED

FIG. ITEM	PART NUMBER	AIRLINE STOCK NUMBER	NOMENCLATURE 1234567	EFF CODE	UNITS PER ASSY
-001C	D2549030404664		. WALL-REAR NP used on 030A (254151420), 030D (25415142E) SEE 25-41-51-420 FOR NHA SEE 25-41-51-42E FOR NHA		RF
-001D	D2549020807864		. WALL-REAR NP used on 030D (25415142A), 030C (25415142B), 030B (25415142C), 030C (25415142D), 030D (25415142G), 030A(25415142J), 030A (25415142M), 030H (25415142N), 030C(25415142P), 030H (25415142Q), 030A (25415142U) SEE 25-41-51-42A FOR NHA SEE 25-41-51-42B FOR NHA SEE 25-41-51-42C FOR NHA SEE 25-41-51-42D FOR NHA SEE 25-41-51-42G FOR NHA SEE 25-41-51-42J FOR NHA SEE 25-41-51-42M FOR NHA SEE 25-41-51-42N FOR NHA SEE 25-41-51-42P FOR NHA SEE 25-41-51-42Q FOR NHA SEE 25-41-51-42U FOR NHA		RF

- ITEM NOT ILLUSTRATED

FIG. ITEM	PART NUMBER	AIRLINE STOCK NUMBER	NOMENCLATURE 1234567		EFF CODE	UNITS PER ASSY
-001E	D2549020812264		. WALL-REAR used on 030E (25415142A), 030D (25415142B), 030A (25415142D), 030B (25415142F), 030C (25415142G), 030D (25415142H), 030A (25415142K), 030C (25415142M), 030E (25415142Q), 030F (25415142R) SEE 25-41-51-42A FOR NHA SEE 25-41-51-42B FOR NHA SEE 25-41-51-42D FOR NHA SEE 25-41-51-42F FOR NHA SEE 25-41-51-42G FOR NHA SEE 25-41-51-42H FOR NHA SEE 25-41-51-42K FOR NHA SEE 25-41-51-42M FOR NHA SEE 25-41-51-42Q FOR NHA SEE 25-41-51-42R FOR NHA	NP		RF
-001F	D2549010611464		. WALL-REAR used on 030F (254151420), 030D (25415142J) SEE 25-41-51-420 FOR NHA SEE 25-41-51-42J FOR NHA	NP		RF
-001G	D2549020805264		. WALL-REAR used on 030A (25415142E), 030B (25415142K), 030D(25415142L), 030B (25415142R), 030C (25415142T) SEE 25-41-51-42E FOR NHA SEE 25-41-51-42K FOR NHA SEE 25-41-51-42L FOR NHA SEE 25-41-51-42R FOR NHA SEE 25-41-51-42T FOR NHA	NP		RF
-001H	D2549030409664		. WALL-REAR used on 030B (25415142G) SEE 25-41-51-42G FOR NHA	NP		RF

- ITEM NOT ILLUSTRATED

FIG. ITEM	PART NUMBER	AIRLINE STOCK NUMBER	NOMENCLATURE 1234567	EFF CODE	UNITS PER ASSY
-001J	D2549030413464		. WALL-REAR NP used on 030F (25415142N), 030F (25415142T) SEE 25-41-51-42N FOR NHA SEE 25-41-51-42T FOR NHA		RF
-001K	D2549030700864		. WALL-REAR NP used on 030D (25415142Q), 030D (25415142U) SEE 25-41-51-42Q FOR NHA SEE 25-41-51-42U FOR NHA		RF
010A	A225401246-538		. . WALL ASSY-REAR POST VSB A2-254-25-130 used on 001A, 001H		001
-010B	A225401246-500		. . WALL ASSY-REAR PRE VSB A2-254-25-130 used on 001B, 001E		001
-010C	A225401246-504		. . WALL ASSY-REAR used on 001C		001
-010D	A225401246-700		. . WALL ASSY-REAR used on 001D		001
-010E	A225401246-536		. . WALL ASSY-REAR used on 001F		001
-010F	A225401246-540		. . WALL ASSY-REAR used on 001G		001
-010G	A225401246-802		. . WALL ASSY-REAR used on 001J		001
-010H	A225401246-804		. . WALL ASSY-REAR used on 001K		001
-020A	NSA935405-01		. . . MOUNT used on 010A, 010B, 010C, 010D, 010E, 010F, 010G, 010H		035

- ITEM NOT ILLUSTRATED

FIG. ITEM	PART NUMBER	AIRLINE STOCK NUMBER	NOMENCLATURE 1234567	EFF CODE	UNITS PER ASSY
-030A	NAS1833C08-250		. . . INSERT used on 010A, 010B, 010C, 010D, 010E, 010F, 010G, 010H		018
-040A	NSA5345-08C		. . . INSERT used on 010A, 010B, 010C, 010D, 010E, 010F, 010G, 010H		004
-050A	EF1840-08CM		. . . INSERT used on 010A, 010B, 010C, 010D, 010E, 010F, 010G, 010H		008
060A	NAS1801-3-7		. . SCREW POST SB 25-1640 used on 001A, 001B, 001C, 001D, 001E, 001F, 001G, 001H, 001J, 001K		012
070A	DAN298-4030		. . SCREW used on 001A, 001B, 001C, 001D, 001E, 001F, 001G, 001H, 001J, 001K		013
080A	ASNA0113-48ADL		. . WASHER used on 001A, 001B, 001C, 001D, 001E, 001F, 001G, 001H, 001J, 001K		025
090A	A3-929-0001-01		. . SWITCH ASSY-TOILET used on 001A, 001B, 001C, 001D, 001F, 001G, 001H, 001J, 001K		001
-090B	A392900190-002		. . SWITCH ASSY-TOILET used on 001E		001
100A	774-081-31		. . . FRAME used on 090A, 090B		001

- ITEM NOT ILLUSTRATED

FIG. ITEM	PART NUMBER	AIRLINE STOCK NUMBER	NOMENCLATURE 1234567	EFF CODE	UNITS PER ASSY
110A	774-101-79		. . . PLATE-FRONT used on 090A		001
-110B	1001289		. . . PLATE-FRONT used on 090B		001
120A	774-101-81		. . . . FOIL-FRONT used on 110A		001
-120B	1001278		. . . . FOIL-FRONT used on 110B		001
130A	NAS1102-08-16		. . SCREW used on 001A, 001B, 001C, 001D, 001E, 001F, 001G, 001H, 001J, 001K		004
140A	A225401245-522		. . SPACER POST VSB A2-254-25-130 used on 001A		001
-140B	A225401245-502		. . SPACER PRE VSB A2-254-25-130 used on 001B, 001D, 001E, 001K		001
-140C	A225401245-500		. . SPACER used on 001F		001
-140D	A225401245-506		. . SPACER used on 001C		001
-140E	A225401245-526		. . SPACER used on 001G		001
-140F	A225401245-530		. . SPACER used on 001H		001
-140G	A225401245-528		. . SPACER used on 001J		001

- ITEM NOT ILLUSTRATED

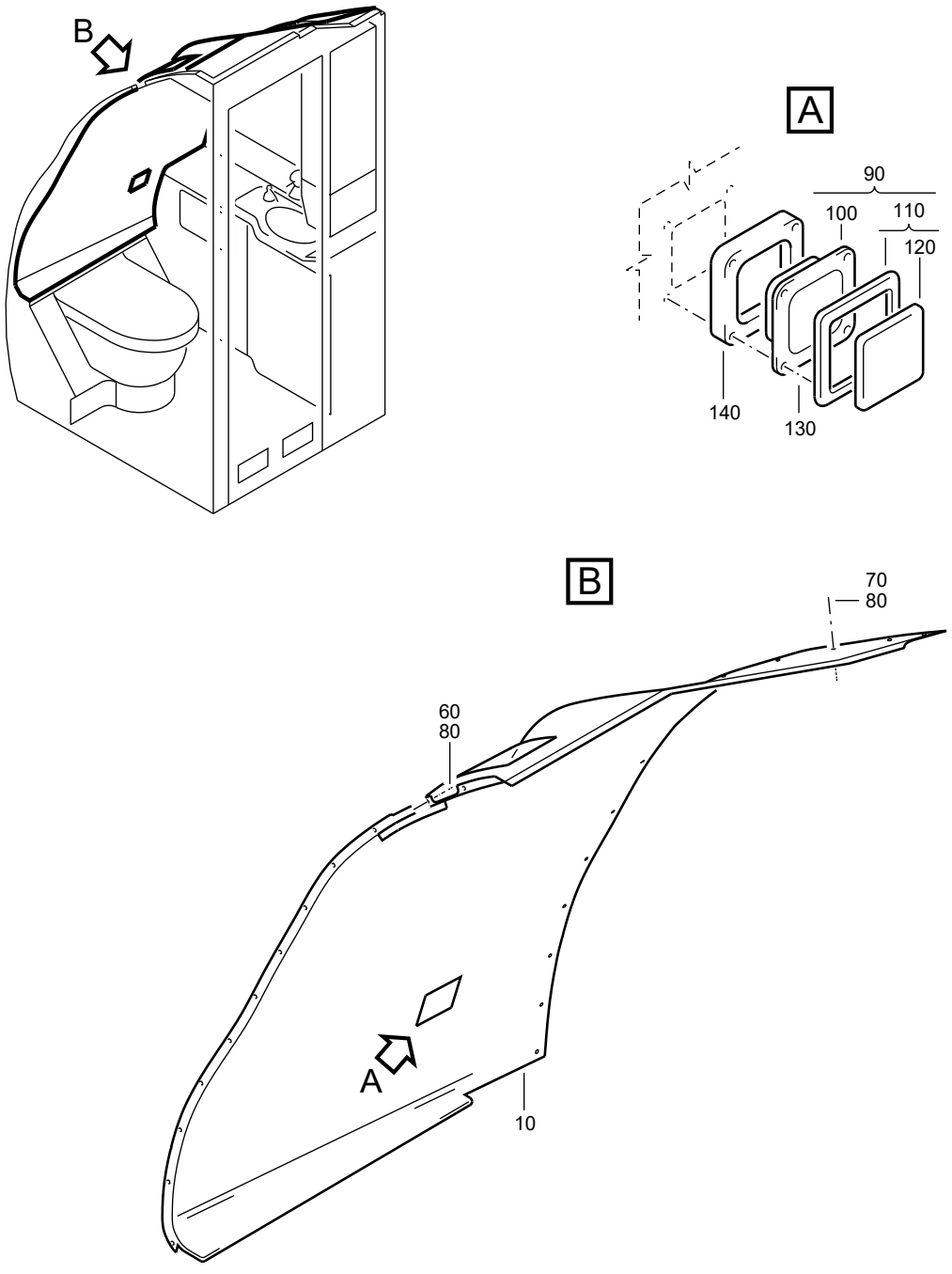

F_PL_254151_05_J_01_00

WALL-REAR
Figure 05J/EN254151SHEET05J01

FIG. ITEM	PART NUMBER	AIRLINE STOCK NUMBER	NOMENCLATURE 1234567	EFF CODE	UNITS PER ASSY
05J					
-001A	D2549010400864		. WALL-REAR NP used on 030E (25415142D), 030C (25415142E), 030G (25415142G), 030C (25415142J), 030D (25415142K), 030C (25415142N), 030A (25415142P), 030G (25415142Q), 030C(25415142R), 030B (25415142S) SEE 25-41-51-42D FOR NHA SEE 25-41-51-42E FOR NHA SEE 25-41-51-42G FOR NHA SEE 25-41-51-42J FOR NHA SEE 25-41-51-42K FOR NHA SEE 25-41-51-42N FOR NHA SEE 25-41-51-42P FOR NHA SEE 25-41-51-42Q FOR NHA SEE 25-41-51-42R FOR NHA SEE 25-41-51-42S FOR NHA		RF
-001B	D2549030408264		. WALL-REAR NP used on 030F (25415142D), 030C (25415142L), 030F (25415142S) SEE 25-41-51-42D FOR NHA SEE 25-41-51-42L FOR NHA SEE 25-41-51-42S FOR NHA		RF
-001C	D2549020411264		. WALL-REAR NP used on 030F (25415142Q) SEE 25-41-51-42Q FOR NHA		RF
010A	A225401246-500		. . WALL ASSY-REAR used on 001A		001
010B	A225401246-542		. . WALL ASSY-REAR used on 001B		001

- ITEM NOT ILLUSTRATED

FIG. ITEM	PART NUMBER	AIRLINE STOCK NUMBER	NOMENCLATURE 1234567	EFF CODE	UNITS PER ASSY
010C	A225401246-544		. . WALL ASSY-REAR used on 001C		001
-020A	NSA935405-01		. . . MOUNT used on 010A, 010B, 010C		035
-030A	NAS1833C08-250		. . . INSERT used on 010A, 010B, 010C		017
-040A	NSA5345-08C		. . . INSERT used on 010A, 010B, 010C		004
-050A	EF1840-08CM		. . . INSERT used on 010A, 010B, 010C		008
060A	NAS1096-3-7		. . SCREW BUY PN NAS1801-3-7 used on 001A, 001B, 001C		012
070A	DAN298-4030		. . SCREW used on 001A, 001B, 001C		013
080A	ASNA0113-48ADL		. . WASHER used on 001A, 001B, 001C		025
090A	A3-929-0001-01		. . SWITCH ASSY-TOILET used on 001A, 001B, 001C		001
100A	774-081-31		. . . FRAME used on 090A		001
110A	774-101-79		. . . PLATE-FRONT used on 090A		001
120A	774-101-81		. . . . FOIL-FRONT used on 110A		001
130A	NAS1102-08-16		. . SCREW used on 001A, 001B, 001C		004

- ITEM NOT ILLUSTRATED

FIG. ITEM	PART NUMBER	AIRLINE STOCK NUMBER	NOMENCLATURE 1234567	EFF CODE	UNITS PER ASSY
140A	A225401245-502		. . SPACER used on 001A		001
-140B	A225401245-528		. . SPACER used on 001B		001
-140C	A225401245-532		. . SPACER used on 001C		001

- ITEM NOT ILLUSTRATED

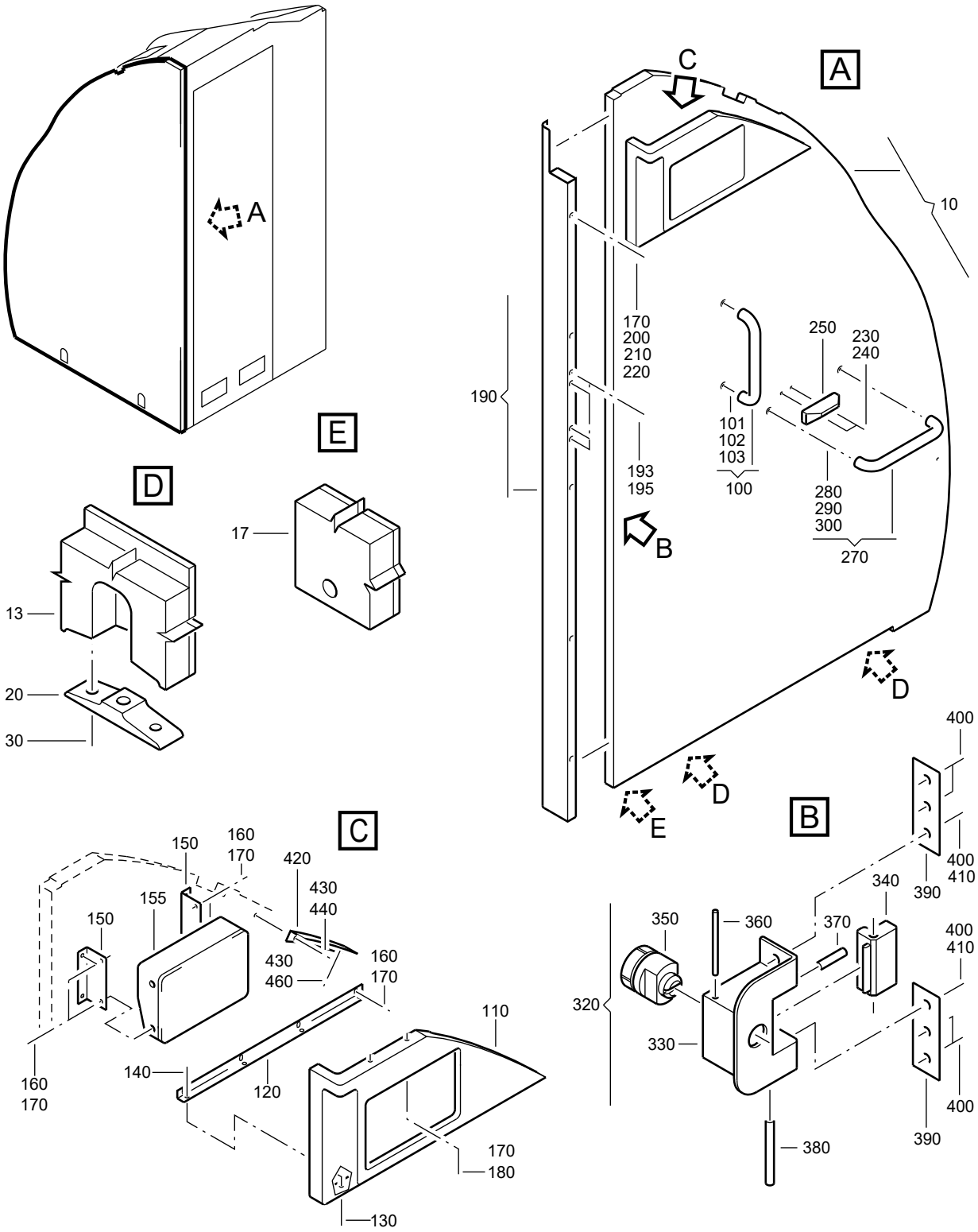

WALL-SIDE
Figure 6/EN254151SHEET06001

FIG. ITEM	PART NUMBER	AIRLINE STOCK NUMBER	NOMENCLATURE 1234567		EFF CODE	UNITS PER ASSY
06						
-001A	D2549010500065		. WALL-SIDE used on 040A (254151010) SEE 25-41-51-010 FOR NHA	NP		RF
-001B	D2549020500065		. WALL-SIDE used on 040B (254151010), 040H (25415101A), 040H(25415101B), 040C (25415101E), 040A (25415101F) SEE 25-41-51-010 FOR NHA SEE 25-41-51-01A FOR NHA SEE 25-41-51-01B FOR NHA SEE 25-41-51-01E FOR NHA SEE 25-41-51-01F FOR NHA	NP		RF
-001C	D2549020500265		. WALL-SIDE used on 040C (254151010) SEE 25-41-51-010 FOR NHA	NP		RF
-001D	D2549010500465		. WALL-SIDE used on 040D (254151010), 040C (25415101A), 040C(25415101B), 040D (25415101E) SEE 25-41-51-010 FOR NHA SEE 25-41-51-01A FOR NHA SEE 25-41-51-01B FOR NHA SEE 25-41-51-01E FOR NHA	NP		RF
-001E	D2549010500665		. WALL-SIDE PRE VSB A2-254-25-080 used on 040E (254151010), 040B (25415101A) SEE 25-41-51-010 FOR NHA SEE 25-41-51-01A FOR NHA	NP		RF

- ITEM NOT ILLUSTRATED

FIG. ITEM	PART NUMBER	AIRLINE STOCK NUMBER	NOMENCLATURE 1234567	EFF CODE	UNITS PER ASSY
-001F	D2549020500465		. WALL-SIDE NP used on 040F (254151010), 040G (25415101B) SEE 25-41-51-010 FOR NHA SEE 25-41-51-01B FOR NHA		RF
-001G	D2549010501065		. WALL-SIDE NP used on 040A (25415101A), 040L (25415101B) SEE 25-41-51-01A FOR NHA SEE 25-41-51-01B FOR NHA		RF
-001H	D2549020501865		. WALL-SIDE NP used on 040G (254151010) SEE 25-41-51-010 FOR NHA		RF
-001J	D2549010501865		. WALL-SIDE NP used on 040E (25415101A), 040A (25415101C), 040H(25415101E) SEE 25-41-51-01A FOR NHA SEE 25-41-51-01C FOR NHA SEE 25-41-51-01E FOR NHA		RF
-001K	D2549010500865		. WALL-SIDE NP used on 040H (254151010), 040D (25415101A) SEE 25-41-51-010 FOR NHA SEE 25-41-51-01A FOR NHA		RF
-001L	D2549010502265		. WALL-SIDE NP used on 040F (25415101A), 040J (25415101B) SEE 25-41-51-01A FOR NHA SEE 25-41-51-01B FOR NHA		RF
-001M	D2549010502465		. WALL-SIDE NP used on 040G (25415101A) SEE 25-41-51-01A FOR NHA		RF

- ITEM NOT ILLUSTRATED

FIG. ITEM	PART NUMBER	AIRLINE STOCK NUMBER	NOMENCLATURE 1234567	EFF CODE	UNITS PER ASSY
-001N	D2549010504665		. WALL-SIDE NP used on 040G (25415101C) SEE 25-41-51-01C FOR NHA		RF
-001P	D2549010501065		. WALL-SIDE NP used on 040K (25415101A) SEE 25-41-51-01A FOR NHA		RF
-001Q	D2549020500065		. WALL-SIDE NP used on 040L (25415101A) SEE 25-41-51-01A FOR NHA		RF
-001R	D2549030606165		. WALL-SIDE NP POST SB 25-1314 used on 040M (25415141J) SEE 25-41-51-41J FOR NHA		RF
-001S	R22540114600065		. WALL-SIDE NP POST VSB A2-254-25-080 used on 040K (254151010), 040N (25415101A) SEE 25-41-51-010 FOR NHA SEE 25-41-51-01A FOR NHA		RF
010A	A225401231-500		. . WALL ASSY-SIDE,AFT used on 001A, 001K		001
-010B	A225401231-504		. . WALL ASSY-SIDE,AFT used on 001B		001
-010C	A225401231-506		. . WALL ASSY-SIDE,AFT used on 001C		001
-010D	A225401231-502		. . WALL ASSY-SIDE,AFT used on 001D		001
-010E	A225401231-508		. . WALL ASSY-SIDE,AFT used on 001E, 001S		001
-010F	A225401231-510		. . WALL ASSY-SIDE,AFT used on 001F		001

- ITEM NOT ILLUSTRATED

FIG. ITEM	PART NUMBER	AIRLINE STOCK NUMBER	NOMENCLATURE 1234567	EFF CODE	UNITS PER ASSY
-010G	A225401231-512		. . WALL ASSY-SIDE,AFT used on 001G		001
-010H	A225401231-514		. . WALL ASSY-SIDE,AFT used on 001H		001
-010J	A225401231-516		. . WALL ASSY-SIDE,AFT used on 001J		001
-010K	A225401231-518		. . WALL ASSY-SIDE,AFT used on 001L		001
-010L	A225401231-520		. . WALL ASSY-SIDE,AFT used on 001M		001
-010M	A225401231-538		. . WALL ASSY-SIDE,AFT used on 001N		001
-010N	A225491231-532		. . WALL ASSY-SIDE,AFT POST SB 25-1289 used on 001P		001
-010P	A225491231-500		. . WALL ASSY-SIDE,AFT POST SB 25-1289 used on 001Q		001
-010Q	A2254012338624		. . WALL ASSY-SIDE,AFT POST SB 25-1314 used on 001R		001
013A	A225400231-202		. . . BRACKET BUY PN A225491004-002 used on 010A, 010B, 010C, 010D, 010E, 010F, 010G, 010H, 010J, 010K, 010L, 010M, 010N, 010P, 010Q		002

- ITEM NOT ILLUSTRATED

FIG. ITEM	PART NUMBER	AIRLINE STOCK NUMBER	NOMENCLATURE 1234567	EFF CODE	UNITS PER ASSY
017A	A225400231-214		. . . BRACKET BUY PN A225491004-232 used on 010A, 010B, 010C, 010D, 010E, 010F, 010G, 010H, 010J, 010K, 010L, 010M, 010N, 010P, 010Q		001
020A	A225400232-208		. . . FITTING used on 010A, 010B, 010C, 010D, 010E, 010F, 010G, 010H, 010J, 010K, 010L, 010M, 010N, 010P, 010Q		002
030A	NAS1102-4-8		. . . SCREW used on 010A, 010B, 010C, 010D, 010E, 010F, 010G, 010H, 010J, 010K, 010L, 010M, 010N, 010P, 010Q		004
-040A	NAS1833C08-370		. . . INSERT USAGE RANGE FROM 054 TO 078 used on 010A, 010B, 010C, 010D, 010E, 010F, 010G, 010H, 010J, 010K, 010L, 010M, 010N, 010P, 010Q		066
-050A	NAS1835C08		. . . INSERT used on 010A, 010B, 010C, 010D, 010E, 010F, 010G, 010H, 010J, 010K, 010L, 010M, 010N, 010P, 010Q		007
-060A	NAS1833C3-370		. . . INSERT USAGE RANGE FROM 023 TO 030 used on 010A, 010B, 010C, 010D, 010E, 010F, 010G, 010H, 010J, 010K, 010L, 010M, 010N, 010P, 010Q		027

- ITEM NOT ILLUSTRATED

FIG. ITEM	PART NUMBER	AIRLINE STOCK NUMBER	NOMENCLATURE 1234567	EFF CODE	UNITS PER ASSY
-070A	NSA5054C5		. . . INSERT used on 010A, 010B, 010C, 010D, 010E, 010F, 010G, 010H, 010J, 010K, 010L, 010M, 010N, 010P		012
-075A	NSA5054-5		. . . INSERT used on 010Q		012
-080A	NSA5054C3		. . . INSERT used on 010A, 010B, 010C, 010D, 010E, 010F, 010G, 010H, 010J, 010K, 010L, 010M, 010N, 010P		005
-083A	NSA5054-3		. . . INSERT used on 010A, 010B, 010C, 010D, 010E, 010F, 010G, 010H, 010J, 010K, 010L, 010M, 010N, 010P, 010Q		001
-085A	NSA5054-4		. . . INSERT used on 010A, 010B, 010C, 010D, 010E, 010F, 010G, 010H, 010J, 010K, 010L, 010M, 010N, 010P, 010Q		008
-087A	NSA5054-08		. . . INSERT used on 010Q		001
-090A	NSA935405-01		. . . MOUNT USAGE RANGE FROM 010 TO 018 used on 010A, 010B, 010C, 010D, 010E, 010F, 010G, 010H, 010J, 010K, 010L, 010M, 010N, 010P, 010Q		014

- ITEM NOT ILLUSTRATED

FIG. ITEM	PART NUMBER	AIRLINE STOCK NUMBER	NOMENCLATURE 1234567	EFF CODE	UNITS PER ASSY
100A	550MBB1		. . HANDLE ASSY used on 001A, 001B, 001G, 001K, 001L, 001M, 001N, 001P, 001Q		001
-100B	550-33-300MBB		. . HANDLE ASSY used on 001C, 001D, 001E, 001F, 001H, 001J, 001R, 001S		001
101A	S7224		. . . SCREW-SPECIAL used on 100A, 100B		002
102A	8534		. . . PIN-SECURITY used on 100A, 100B		002
103A	8587		. . . WASHER-SPECIAL used on 100A, 100B		002
110A	A225401410-500		. . COVER-OXYGEN CONTAIN-ER ASSY used on 001A, 001K		001
-110B	A225401410-504		. . COVER-OXYGEN CONTAIN-ER ASSY used on 001B, 001Q		001
-110C	A225401410-502		. . COVER-OXYGEN CONTAIN-ER ASSY used on 001C, 001D, 001E, 001F, 001G, 001H, 001J, 001L, 001M, 001N, 001P, 001R, 001S		001
120A	A225400450-204		. . ANGLE used on 001A, 001B, 001C, 001D, 001E, 001F, 001G, 001H, 001J, 001K, 001L, 001M, 001N, 001P, 001Q, 001R, 001S		001

- ITEM NOT ILLUSTRATED

FIG. ITEM	PART NUMBER	AIRLINE STOCK NUMBER	NOMENCLATURE 1234567	EFF CODE	UNITS PER ASSY
130A	NAS1102-08-5		. . SCREW used on 001A, 001B, 001C, 001D, 001E, 001F, 001G, 001H, 001J, 001K, 001L, 001M, 001N, 001P, 001Q, 001R, 001S		004
140A	NSA5067-08-1		. . NUT used on 001A, 001B, 001C, 001D, 001E, 001F, 001G, 001H, 001J, 001K, 001L, 001M, 001N, 001P, 001Q, 001R, 001S		004
150A	A225400450-202		. . ANGLE used on 001A, 001B, 001C, 001D, 001E, 001F, 001G, 001H, 001J, 001K, 001L, 001M, 001N, 001P, 001Q, 001R, 001S		002
155A	AH5702-29		. . CONTAINER ASSY-OXYGEN used on 001A		001
-155B	AH5702-51		. . CONTAINER ASSY-OXYGEN used on 001B, 001Q		001
-155C	AH5702-25		. . CONTAINER ASSY-OXYGEN used on 001C, 001D, 001F, 001G, 001H, 001P		001
-155D	22C150150170001		. . CONTAINER ASSY-OXYGEN PRE VSB A2-254-25-080 used on 001E		001
-155E	AH5702-85		. . CONTAINER ASSY-OXYGEN used on 001J, 001L, 001M		001
-155F	22C150150080001		. . CONTAINER ASSY-OXYGEN used on 001K		001
-155G	S2F212-85		. . CONTAINER ASSY-OXYGEN used on 001J, 001L, 001M, 001N		001

- ITEM NOT ILLUSTRATED

FIG. ITEM	PART NUMBER	AIRLINE STOCK NUMBER	NOMENCLATURE 1234567	EFF CODE	UNITS PER ASSY
-155H	G2F212-85		. . CONTAINER ASSY-OXYGEN used on 001N, 001R		001
-155J	22G150150170400		. . CONTAINER ASSY-OXYGEN POST VSB A2-254-25-078 POST VSB A2-254-25-080 used on 001G, 001S		001
160A	NAS1096-2-5		. . SCREW BUY PN NAS1801-08-5 PRE VSB A2-254-25-078 PRE VSB A2-254-25-080 used on 001A, 001B, 001C, 001D, 001E, 001F, 001G, 001H, 001J, 001K, 001L, 001M, 001N, 001P, 001Q, 001R		012
-160B	NAS1096-2-5		. . SCREW POST VSB A2-254-25-078 POST VSB A2-254-25-080 BUY PN NAS1801-08-5 used on 001G, 001S		008
-162A	NAS1801-08-6		. . SCREW POST VSB A2-254-25-078 POST VSB A2-254-25-080 used on 001G, 001S		004
170A	AN960C8		. . WASHER BUY PN NAS1149CN832R PRE VSB A2-254-25-078 PRE VSB A2-254-25-080 used on 001A, 001B, 001C, 001D, 001E, 001F, 001G, 001H, 001J, 001K, 001L, 001M, 001N, 001P, 001Q, 001R		019

- ITEM NOT ILLUSTRATED

FIG. ITEM	PART NUMBER	AIRLINE STOCK NUMBER	NOMENCLATURE 1234567	EFF CODE	UNITS PER ASSY
-170B	AN960C8		. . WASHER POST VSB A2-254-25-078 POST VSB A2-254-25-080 BUY PN NAS1149CN832R used on 001G, 001S		015
-172A	NAS1149CN832R		. . WASHER POST VSB A2-254-25-078 POST VSB A2-254-25-080 used on 001G, 001S		004
180A	A225400451-200		. . STUD used on 001A, 001B, 001C, 001D, 001E, 001F, 001G, 001H, 001J, 001K, 001L, 001M, 001N, 001P, 001Q, 001R, 001S		002
190A	A225401222-508		. . POST ASSY used on 001A, 001K		001
-190B	A225401222-506		. . POST ASSY used on 001B, 001Q		001
-190C	A225401222-500		. . POST ASSY used on 001C, 001E, 001F, 001H, 001L, 001M, 001N, 001S		001
-190D	A225401222-502		. . POST ASSY used on 001D, 001R		001
-190E	A225401222-504		. . POST ASSY used on 001G, 001J, 001P		001
193A	NAS514P832-4		. . . SCREW used on 190A, 190B, 190C, 190D, 190E		004

- ITEM NOT ILLUSTRATED

FIG. ITEM	PART NUMBER	AIRLINE STOCK NUMBER	NOMENCLATURE 1234567	EFF CODE	UNITS PER ASSY
195A	NAS1068A08		. . . NUT BUY PN MS21075L08 used on 190A, 190B, 190C, 190D, 190E		004
200A	NAS1096-2-7		. . SCREW BUY PN NAS1801-08-7 used on 001A, 001B, 001C, 001D, 001E, 001F, 001G, 001H, 001J, 001K, 001L, 001M, 001N, 001P, 001Q, 001R, 001S		005
210A	2634DP437-110		. . CAP used on 001A, 001B, 001C, 001D, 001E, 001F, 001G, 001H, 001J, 001K, 001L, 001M, 001N, 001P, 001Q, 001R, 001S		004
220A	NAS1096-3-9		. . SCREW BUY PN NAS1801-3-9 used on 001A, 001B, 001C, 001D, 001E, 001F, 001G, 001H, 001J, 001K, 001L, 001M, 001N, 001P, 001Q, 001R, 001S		001
230A	NAS1096-2-7		. . SCREW POST SB 25-1214 BUY PN NAS1801-08-7 used on 001G, 001M, 001P		002
240A	NAS1149CN832R		. . WASHER POST SB 25-1214 used on 001G, 001M, 001P		002
250A	A2547380206000		. . SUPPORT POST SB 25-1214 used on 001G, 001M, 001P		001

- ITEM NOT ILLUSTRATED

FIG. ITEM	PART NUMBER	AIRLINE STOCK NUMBER	NOMENCLATURE 1234567	EFF CODE	UNITS PER ASSY
-260A	NAS1833C08-370		. . INSERT POST SB 25-1214 used on 001D, 001G, 001M, 001P		002
270A	550-33-300MBB		. . HANDLE ASSY POST SB 25-1214 used on 001D, 001R		001
280A	S7224		. . . SCREW-SPECIAL used on 270A		002
290A	8534		. . . PIN-SECURITY used on 270A		002
300A	8587		. . . WASHER-SPECIAL used on 270A		002
-310A	3550012		. . RIVET POST SB 25-1214 used on 001D		006
320A	A225400208-000		. . DEVICE ASSY-EMERGENCY UNLOCKING,SINGLE DOOR POST SB 25-1316 used on 001G, 001M, 001P		001
330A	A225400208-200		. . . HOUSING-EMERGENCY UN-LOCKING DEVICE used on 320A		001
340A	A225400208-204		. . . STRIKE-EMERGENCY UN-LOCKING DEVICE used on 320A		001
350A	A225400208-202		. . . PIVOT-EMERGENCY UN-LOCKING DEVICE used on 320A		001
360A	A225400208-210		. . . PIN used on 320A		001

- ITEM NOT ILLUSTRATED

FIG. ITEM	PART NUMBER	AIRLINE STOCK NUMBER	NOMENCLATURE 1234567	EFF CODE	UNITS PER ASSY
370A	SM1275-1KNM04		. . . CATCH-SNAP used on 320A		001
380A	A225400208-208		. . . BOLT used on 320A		001
390A	A225400221-202		. . PLATE POST SB 25-1316 used on 001G, 001M, 001P		002
400A	NAS514P832-7		. . SCREW POST SB 25-1316 used on 001G, 001M, 001P		006
410A	NSA5067-08-1		. . NUT POST SB 25-1316 used on 001G, 001M, 001P		002
420A	A225401236-200		. . ANGLE POST SB 25-1289 used on 001P, 001Q		001
430A	NAS1149C0332R		. . WASHER used on 001P, 001Q		009
440A	NAS1096-3-7		. . SCREW BUY PN NAS1801-3-7 used on 001P, 001Q		004
-450A	NAS1833C3-250		. . INSERT used on 001P, 001Q		005
460A	NAS1096-3-5		. . SCREW BUY PN NAS1801-3-5 used on 001P, 001Q		005

- ITEM NOT ILLUSTRATED

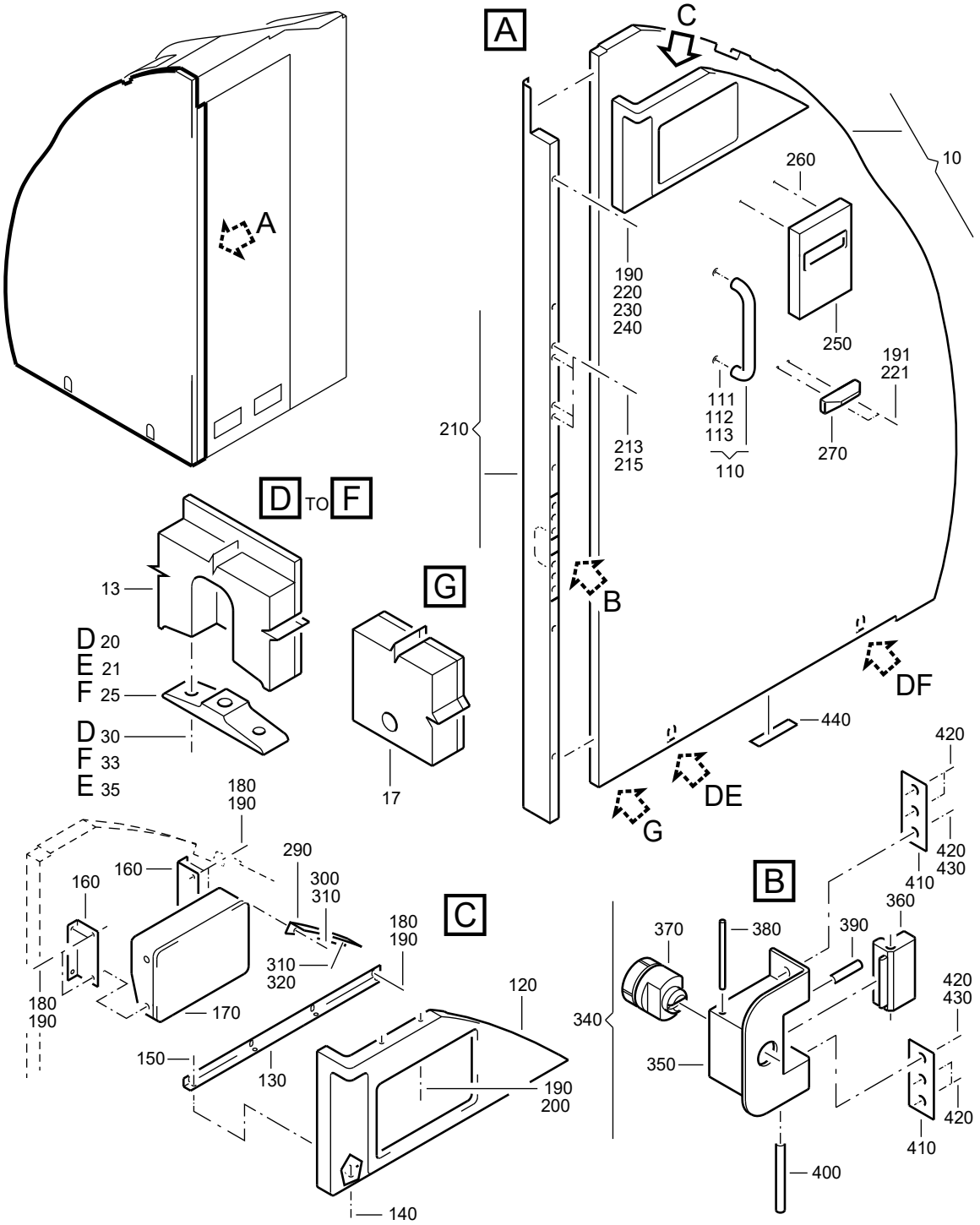

F_PL_254151_06_A_01_00

WALL-SIDE
Figure 06A/EN254151SHEET06A01

FIG. ITEM	PART NUMBER	AIRLINE STOCK NUMBER	NOMENCLATURE 1234567		EFF CODE	UNITS PER ASSY
06A						
-001A	D2549030500265		. WALL-SIDE used on 040J (254151010), 040B (25415101E) SEE 25-41-51-010 FOR NHA SEE 25-41-51-01E FOR NHA	NP		RF
-001B	D2549020503865		. WALL-SIDE used on 040K (25415101C) SEE 25-41-51-01C FOR NHA	NP		RF
-001C	D2549010504865		. WALL-SIDE used on 040F (25415101C), 040N (25415101K) SEE 25-41-51-01C FOR NHA SEE 25-41-51-01K FOR NHA	NP		RF
-001D	D2549020600265		. WALL-SIDE used on 040B (25415101D) SEE 25-41-51-01D FOR NHA	NP		RF
-001E	D2549010505465		. WALL-SIDE used on 040F (25415101D) SEE 25-41-51-01D FOR NHA	NP		RF
-001F	D2549030501265		. WALL-SIDE PRE VSB A2-254-25-080 used on 040F (25415101B), 040K (25415101D) SEE 25-41-51-01B FOR NHA SEE 25-41-51-01D FOR NHA	NP		RF
-001G	D2549020505065		. WALL-SIDE used on 040L (25415101D) SEE 25-41-51-01D FOR NHA	NP		RF
-001H	D2549010505865		. WALL-SIDE used on 040M (25415101D) SEE 25-41-51-01D FOR NHA	NP		RF

- ITEM NOT ILLUSTRATED

FIG. ITEM	PART NUMBER	AIRLINE STOCK NUMBER	NOMENCLATURE 1234567	EFF CODE	UNITS PER ASSY
-001J	D2549020601265		. WALL-SIDE NP used on 040K (25415101E) SEE 25-41-51-01E FOR NHA		RF
-001K	D2549020601465		. WALL-SIDE NP POST SB 25-1316 used on 040K (25415101H) SEE 25-41-51-01H FOR NHA		RF
-001L	D2549020601665		. WALL-SIDE NP POST SB 25-1316 used on 040K (25415101K) SEE 25-41-51-01K FOR NHA		RF
-001M	D2549010500065		. WALL-SIDE NP used on 040L (25415101E), 040K (25415141L) SEE 25-41-51-01E FOR NHA SEE 25-41-51-041L FOR NHA		RF
-001N	D2549020500265		. WALL-SIDE NP used on 040L (25415101M) SEE 25-41-51-01M FOR NHA		RF
-001P	R22540118800065		. WALL-SIDE NP POST VSB A2-254-25-080 used on 040N (25415101B), 040Q (25415101D) SEE 25-41-51-01B FOR NHA SEE 25-41-51-01D FOR NHA		RF
010A	A225401231-526		. . WALL ASSY-SIDE,AFT used on 001A		001
-010B	A2254012318572		. . WALL ASSY-SIDE,AFT POST SB 25-1189 POST SB 25-1314 used on 001C		001
-010C	A225401231-552		. . WALL ASSY-SIDE,AFT used on 001D, 001H		001

- ITEM NOT ILLUSTRATED

FIG. ITEM	PART NUMBER	AIRLINE STOCK NUMBER	NOMENCLATURE 1234567	EFF CODE	UNITS PER ASSY
-010D	A225401231-544		. . WALL ASSY-SIDE,AFT used on 001E		001
-010E	A225401231-508		. . WALL ASSY-SIDE,AFT used on 001F, 001P		001
-010F	A225401231-524		. . WALL ASSY-SIDE,AFT used on 001G		001
-010G	A225491231-548		. . WALL ASSY-SIDE,AFT POST SB 25-1289 used on 001J		001
-010H	A225401231-568		. . WALL ASSY-SIDE,AFT used on 001K, 001L, 001M, 001N		001
-010J	A2254012318526		. . WALL ASSY-SIDE,AFT POST SB 25-1314 used on 001B		001
013A	A225400231-202		. . . BRACKET BUY PN A225491004-002 used on 010A, 010B, 010C, 010D, 010E, 010F, 010G, 010H, 010J		002
017A	A225400231-214		. . . BRACKET BUY PN A225491004-232 used on 010A, 010B, 010C, 010D, 010E, 010F, 010G, 010H, 010J		001
020A	A225400232-208		. . . FITTING used on 010A, 010B, 010C, 010D, 010E, 010F, 010H		002
021A	A225400232-208		. . . FITTING used on 010G		001
025A	A225400232-216		. . . FITTING used on 010G		001

- ITEM NOT ILLUSTRATED

FIG. ITEM	PART NUMBER	AIRLINE STOCK NUMBER	NOMENCLATURE 1234567	EFF CODE	UNITS PER ASSY
030A	NAS1102E4-10		. . . SCREW used on 010A, 010B, 010C, 010D, 010E, 010F, 010G, 010H, 010J		004
033A	ABS0705-6-50		. . . SCREW used on 010G		002
035A	ABS0704-6-50		. . . SCREW used on 010G		002
-040A	NAS1833C08-370		. . . INSERT USE AS REQUIRED used on 010A, 010B, 010C, 010D, 010E, 010F, 010G, 010H, 010J		AR
-050A	NAS1835C08		. . . INSERT used on 010A, 010B, 010C, 010D, 010E, 010F, 010G, 010H, 010J		007
-060A	NAS1833C3-370		. . . INSERT used on 010A, 010B, 010C, 010D, 010E, 010F, 010G, 010H, 010J		029
-070A	NSA5054-5		. . . INSERT used on 010A, 010B, 010C, 010D, 010E, 010F, 010G, 010H, 010J		012
-080A	NSA5054-3		. . . INSERT used on 010A, 010B, 010C, 010D, 010E, 010F, 010G, 010H, 010J		001
-090A	NSA5054-4		. . . INSERT used on 010A, 010B, 010C, 010D, 010E, 010F, 010G, 010H, 010J		001

- ITEM NOT ILLUSTRATED

FIG. ITEM	PART NUMBER	AIRLINE STOCK NUMBER	NOMENCLATURE 1234567	EFF CODE	UNITS PER ASSY
-100A	NSA935405-01		. . . MOUNT USE AS REQUIRED used on 010A, 010B, 010C, 010D, 010E, 010F, 010G, 010H, 010J		AR
110A	550MBB1		. . HANDLE ASSY used on 001A, 001B, 001D, 001H		001
-110B	550-33-300MBB		. . HANDLE ASSY used on 001C, 001E, 001F, 001G, 001J, 001K, 001L, 001M, 001N, 001P		001
111A	S7224		. . . SCREW-SPECIAL used on 110A, 110B		002
112A	8534		. . . PIN-SECURITY used on 110A, 110B		002
113A	8587		. . . WASHER-SPECIAL used on 110A, 110B		002
120A	A225401410-502		. . COVER-OXYGEN CONTAIN-ER ASSY used on 001A, 001B, 001C, 001D, 001E, 001F, 001G, 001H, 001J, 001K, 001L, 001M, 001N, 001P		001
130A	A225400450-204		. . ANGLE used on 001A, 001B, 001C, 001D, 001E, 001F, 001G, 001H, 001J, 001K, 001L, 001M, 001N, 001P		001
140A	NAS1102-08-5		. . SCREW used on 001A, 001B, 001C, 001D, 001E, 001F, 001G, 001H, 001J, 001K, 001L, 001M, 001N, 001P		004

- ITEM NOT ILLUSTRATED

FIG. ITEM	PART NUMBER	AIRLINE STOCK NUMBER	NOMENCLATURE 1234567	EFF CODE	UNITS PER ASSY
150A	NSA5067-08-1		. . NUT used on 001A, 001B, 001C, 001D, 001E, 001F, 001G, 001H, 001J, 001K, 001L, 001M, 001N, 001P		004
160A	A225400450-202		. . ANGLE used on 001A, 001B, 001C, 001D, 001E, 001F, 001G, 001H, 001J, 001K, 001L, 001M, 001N, 001P		002
170A	AH5702-85		. . CONTAINER ASSY-OXYGEN used on 001A, 001C, 001D, 001E, 001G, 001H, 001K, 001M		001
-170B	AH5702-25		. . CONTAINER ASSY-OXYGEN used on 001B		001
-170C	22C150150320001		. . CONTAINER ASSY-OXYGEN PRE VSB A2-254-25-080 used on 001F, 001J		001
-170D	G2F212-85		. . CONTAINER ASSY-OXYGEN POST SB 35-1020 used on 001L, 001N		001
-170E	22G150150320400		. . CONTAINER ASSY-OXYGEN POST VSB A2-254-25-080 used on 001P		001
180A	NAS1096-2-5		. . SCREW BUY PN NAS1801-08-5 PRE VSB A2-254-25-080 used on 001A, 001B, 001C, 001D, 001E, 001F, 001G, 001H, 001J, 001K, 001L, 001M, 001N		008

- ITEM NOT ILLUSTRATED

FIG. ITEM	PART NUMBER	AIRLINE STOCK NUMBER	NOMENCLATURE 1234567	EFF CODE	UNITS PER ASSY
-180B	NAS1096-2-5		. . SCREW BUY PN NAS1801-08-5 POST VSB A2-254-25-080 used on 001P		004
-182A	NAS1801-08-6		. . SCREW POST VSB A2-254-25-080 used on 001P		004
190A	AN960C8		. . WASHER PRE VSB A2-254-25-080 BUY PN NAS1149CN832R used on 001A, 001B, 001C, 001D, 001E, 001F, 001G, 001H, 001J, 001K, 001L, 001M, 001N		013
-190B	AN960C8		. . WASHER POST VSB A2-254-25-080 BUY PN NAS1149CN832R used on 001P		009
191A	NAS1149CN832R		. . WASHER POST SB 25-1214 used on 001A, 001B		002
-192A	NAS1149CN832R		. . WASHER POST VSB A2-254-25-080 used on 001P		004
200A	A225400451-202		. . STUD used on 001A, 001B, 001C, 001D, 001E, 001F, 001G, 001H, 001J, 001K, 001L, 001M, 001N, 001P		002
210A	A225401222-500		. . POST ASSY used on 001A, 001B, 001C, 001E, 001F, 001G, 001K, 001L, 001M, 001N, 001P		001

- ITEM NOT ILLUSTRATED

FIG. ITEM	PART NUMBER	AIRLINE STOCK NUMBER	NOMENCLATURE 1234567	EFF CODE	UNITS PER ASSY
-210B	A225401222-502		. . POST ASSY used on 001D, 001H		001
-210C	A225401222-520		. . POST ASSY used on 001J		001
213A	NAS514P832-4		. . . SCREW used on 210A, 210B, 210C		004
215A	NAS1068A08		. . . NUT BUY PN MS21075L08 used on 210A, 210B, 210C		004
220A	NAS1096-2-7		. . SCREW BUY PN NAS1801-08-7 used on 001A, 001B, 001C, 001D, 001E, 001F, 001G, 001H, 001J, 001K, 001L, 001M, 001N, 001P		005
221A	NAS1096-2-7		. . SCREW POST SB 25-1214 BUY PN NAS1801-08-7 used on 001A, 001B		002
230A	2634DP437-110		. . CAP used on 001A, 001B, 001C, 001D, 001E, 001F, 001G, 001H, 001J, 001K, 001L, 001M, 001N, 001P		004
240A	NAS1096-3-9		. . SCREW BUY PN NAS1801-3-9 used on 001A, 001B, 001C, 001D, 001E, 001F, 001G, 001H, 001J, 001K, 001L, 001M, 001N, 001P		001

- ITEM NOT ILLUSTRATED

FIG. ITEM	PART NUMBER	AIRLINE STOCK NUMBER	NOMENCLATURE 1234567	EFF CODE	UNITS PER ASSY
250A	A2547577004800		. . DISPENSER-TOILET SEAT COVER used on 001H, 001J A254-75770-048-00		001
260A	NAS1100-08-4		. . SCREW used on 001H, 001J		002
270A	A2547380206000		. . SUPPORT POST SB 25-1214 used on 001A, 001B		001
-280A	NAS1833C08-370		. . INSERT POST SB 25-1214 used on 001A, 001B		002
290A	A225401236-200		. . ANGLE POST SB 25-1289 used on 001J		001
300A	NAS1096-3-7		. . SCREW POST SB 25-1289 BUY PN NAS1801-3-7 used on 001J		004
310A	NAS1149C0332R		. . WASHER POST SB 25-1289 used on 001J		004
320A	NAS1096-3-5		. . SCREW POST SB 25-1289 BUY PN NAS1801-3-5 used on 001J		005
-330A	NAS1833C3-250		. . INSERT POST SB 25-1289 used on 001J		005

- ITEM NOT ILLUSTRATED

FIG. ITEM	PART NUMBER	AIRLINE STOCK NUMBER	NOMENCLATURE 1234567	EFF CODE	UNITS PER ASSY
340A	A225400208-000		. . DEVICE ASSY-EMERGENCY UNLOCKING,SINGLE DOOR POST SB 25-1316 used on 001B, 001M, 001N		001
350A	A225400208-200		. . . HOUSING-EMERGENCY UN-LOCKING DEVICE used on 340A		001
360A	A225400208-204		. . . STRIKE-EMERGENCY UN-LOCKING DEVICE used on 340A		001
370A	A225400208-202		. . . PIVOT-EMERGENCY UN-LOCKING DEVICE used on 340A		001
380A	A225400208-210		. . . PIN used on 340A		001
390A	SM1275-1KNM04		. . . CATCH-SNAP used on 340A		001
400A	A225400208-208		. . . BOLT used on 340A		001
410A	A225400221-202		. . PLATE POST SB 25-1316 used on 001B, 001M, 001N		002
420A	NAS514P832-7		. . SCREW POST SB 25-1316 used on 001B, 001M, 001N		006
430A	NSA5067-08-1		. . NUT POST SB 25-1316 used on 001B, 001M, 001N		002

- ITEM NOT ILLUSTRATED

FIG. ITEM	PART NUMBER	AIRLINE STOCK NUMBER	NOMENCLATURE 1234567	EFF CODE	UNITS PER ASSY
440A	A225400231-362		. . STRIP-REINFORCING POST SB 25-1314 REQUIRED LENGTH 24MM used on 001B, 001C		001

- ITEM NOT ILLUSTRATED

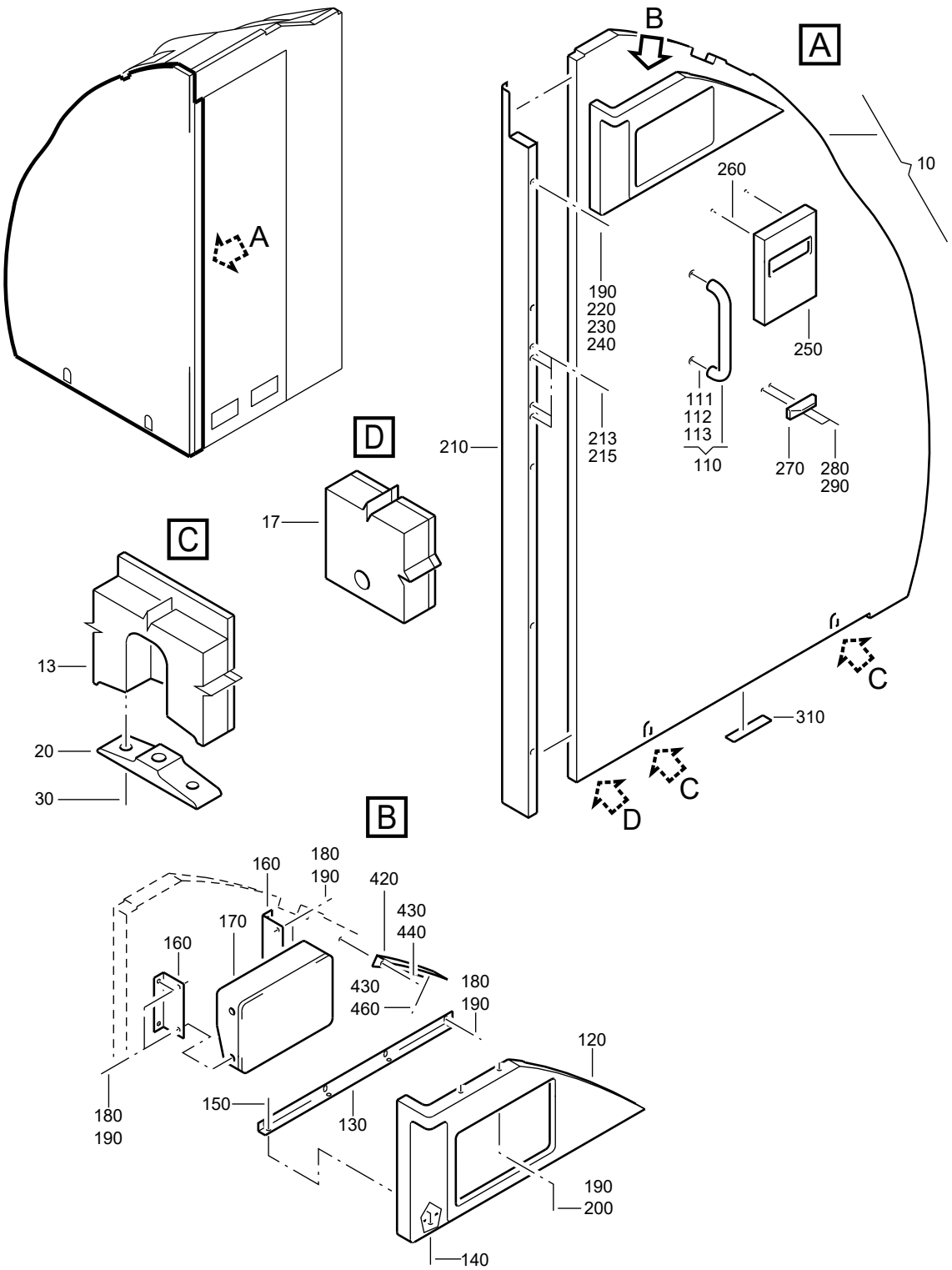

F_PL_254151_06_B_01_01

WALL-SIDE
Figure 06B/EN254151SHEET06B01

FIG. ITEM	PART NUMBER	AIRLINE STOCK NUMBER	NOMENCLATURE 1234567	EFF CODE	UNITS PER ASSY
06B					
-001A	D2549020502465		. WALL-SIDE NP used on 040A (25415101B) SEE 25-41-51-01B FOR NHA		RF
-001B	D2549010502665		. WALL-SIDE NP used on 040B (25415101B), 040F (25415101E) SEE 25-41-51-01B FOR NHA SEE 25-41-51-01E FOR NHA		RF
-001C	D2549020503065		. WALL-SIDE NP used on 040D (25415101B), 040G (25415101E) SEE 25-41-51-01B FOR NHA SEE 25-41-51-01E FOR NHA		RF
-001D	D2549020502665		. WALL-SIDE NP used on 040E (25415101B) SEE 25-41-51-01B FOR NHA		RF
-001E	D2549030500865		. WALL-SIDE NP used on 040J (25415101A), 040J (25415101C) SEE 25-41-51-01A FOR NHA SEE 25-41-51-01C FOR NHA		RF
-001F	D2549030500665		. WALL-SIDE NP used on 040B (25415101C), 040A (25415101E) SEE 25-41-51-01C FOR NHA SEE 25-41-51-01E FOR NHA		RF
-001G	D2549030502065		. WALL-SIDE NP used on 040F (25415101H) SEE 25-41-51-01H FOR NHA		RF
-001H	D2549020604065		. WALL-SIDE NP used on 040L (25415101H) SEE 25-41-51-01H FOR NHA		RF

- ITEM NOT ILLUSTRATED

FIG. ITEM	PART NUMBER	AIRLINE STOCK NUMBER	NOMENCLATURE 1234567		EFF CODE	UNITS PER ASSY
-001J	D2549020503665		. WALL-SIDE used on 040E (25415101C), 040E (25415101E) SEE 25-41-51-01C FOR NHA SEE 25-41-51-01E FOR NHA	NP		RF
-001K	D2549020600065		. WALL-SIDE used on 040H (25415101C) SEE 25-41-51-01C FOR NHA	NP		RF
-001L	D2549010507265		. WALL-SIDE used on 040B (25415101F) SEE 25-41-51-01F FOR NHA	NP		RF
-001M	D2549010501065		. WALL-SIDE used on 040F (25415141T) SEE 25-41-51-41T FOR NHA	NP		RF
-001N	D2549010510265		. WALL-SIDE used on 040J (25415101L) SEE 25-41-51-01L FOR NHA	NP		RF
-001P	D2549030500865		. WALL-SIDE used on 040M (25415101A), 040N (25415101C) SEE 25-41-51-01A FOR NHA SEE 25-41-51-01C FOR NHA	NP		RF
-001Q	D2549030502065		. WALL-SIDE used on 040P (25415101H) SEE 25-41-51-01H FOR NHA	NP		RF
-001R	D2549020503065		. WALL-SIDE used on 040M (25415101B) SEE 25-41-51-01B FOR NHA	NP		RF
010A	A225401231-510		. . WALL ASSY-SIDE,AFT used on 001A			001
-010B	A225401231-522		. . WALL ASSY-SIDE,AFT used on 001B			001

- ITEM NOT ILLUSTRATED

FIG. ITEM	PART NUMBER	AIRLINE STOCK NUMBER	NOMENCLATURE 1234567	EFF CODE	UNITS PER ASSY
-010C	A225401231-528		. . WALL ASSY-SIDE,AFT used on 001C		001
-010D	A225401231-524		. . WALL ASSY-SIDE,AFT used on 001D		001
-010E	A225401231-542		. . WALL ASSY-SIDE,AFT used on 001E, 001G		001
-010F	A225401231-532		. . WALL ASSY-SIDE,AFT used on 001F		001
-010G	A225401231-610		. . WALL ASSY-SIDE,AFT used on 001H		001
-010H	A225401231-516		. . WALL ASSY-SIDE,AFT used on 001L		001
-010J	A225401231-534		. . WALL ASSY-SIDE,AFT used on 001J		001
-010K	A2254012318540		. . WALL ASSY-SIDE,AFT POST SB 25-1314 used on 001K		001
-010L	A2254012318532		. . WALL ASSY-SIDE,AFT POST SB 25-1314 used on 001M		001
-010M	A2254012318526		. . WALL ASSY-SIDE,AFT POST SB 25-1314 used on 001N		001
-010N	A225491231-544		. . WALL ASSY-SIDE,AFT used on 001P, 001Q, 001R		001
013A	A225400231-202		. . . BRACKET BUY PN A225491004-002 used on 010A, 010B, 010C, 010D, 010E, 010F, 010G, 010H, 010J, 010K, 010L, 010M, 010N		002

- ITEM NOT ILLUSTRATED

FIG. ITEM	PART NUMBER	AIRLINE STOCK NUMBER	NOMENCLATURE 1234567	EFF CODE	UNITS PER ASSY
017A	A225400231-214		. . . BRACKET BUY PN A225491004-232 used on 010A, 010B, 010C, 010D, 010E, 010F, 010G, 010H, 010J, 010K, 010L, 010M, 010N		001
020A	A225400232-208		. . . FITTING used on 010A, 010B, 010C, 010D, 010E, 010F, 010G, 010H, 010J, 010K, 010L, 010M, 010N		002
030A	NAS1102E4-10		. . . SCREW used on 010A, 010B, 010C, 010D, 010E, 010F, 010G, 010H, 010J, 010K, 010L, 010M, 010N		004
-040A	NAS1833C08-370		. . . INSERT USE AS REQUIRED USAGE RANGE FROM 54 TO 59 used on 010A, 010B, 010C, 010D, 010E, 010F, 010G, 010H, 010J, 010K, 010L, 010M, 010N		AR
-050A	NAS1835C08		. . . INSERT used on 010A, 010B, 010C, 010D, 010E, 010F, 010G, 010H, 010J, 010K, 010L, 010M, 010N		007
-060A	NAS1833C3-370		. . . INSERT used on 010A, 010B, 010C, 010D, 010E, 010F, 010G, 010H, 010J, 010K, 010L, 010M, 010N		029
-070A	NSA5054-5		. . . INSERT used on 010A, 010B, 010C, 010D, 010E, 010F, 010G, 010H, 010J, 010K, 010L, 010M, 010N		012

- ITEM NOT ILLUSTRATED

FIG. ITEM	PART NUMBER	AIRLINE STOCK NUMBER	NOMENCLATURE 1234567	EFF CODE	UNITS PER ASSY
-080A	NSA5054-3		. . . INSERT used on 010A, 010B, 010C, 010D, 010E, 010F, 010G, 010H, 010J, 010K, 010L, 010M, 010N		001
-090A	NSA5054-4		. . . INSERT used on 010A, 010B, 010C, 010D, 010E, 010F, 010G, 010H, 010J, 010K, 010L, 010M, 010N		008
-100A	NSA935405-01		. . . MOUNT USE AS REQUIRED used on 010A, 010B, 010C, 010D, 010E, 010F, 010G, 010H, 010J, 010K, 010L, 010M, 010N		AR
110A	550-33-300MBB		. . HANDLE ASSY used on 001A, 001D, 001H, 001K, 001L		001
-110B	550MBB1		. . HANDLE ASSY used on 001B, 001C, 001E, 001F, 001G, 001J, 001M, 001N, 001P, 001Q, 001R		001
111A	S7224		. . . SCREW-SPECIAL used on 110A, 110B		002
112A	8534		. . . PIN-SECURITY used on 110A, 110B		002
113A	8587		. . . WASHER-SPECIAL used on 110A, 110B		002
120A	A225401410-502		. . COVER-OXYGEN CONTAINER ASSY used on 001A, 001C, 001D, 001E, 001G, 001H, 001J, 001K, 001L, 001P, 001Q, 001R		001

- ITEM NOT ILLUSTRATED

FIG. ITEM	PART NUMBER	AIRLINE STOCK NUMBER	NOMENCLATURE 1234567	EFF CODE	UNITS PER ASSY
-120B	A225401410-500		. . COVER-OXYGEN CONTAIN-ER ASSY used on 001B, 001F		001
130A	A225400450-204		. . ANGLE used on 001A, 001B, 001C, 001D, 001E, 001F, 001G, 001H, 001J, 001K, 001L, 001M, 001N, 001P, 001Q, 001R		001
140A	NAS1102-08-5		. . SCREW used on 001A, 001B, 001C, 001D, 001E, 001F, 001G, 001H, 001J, 001K, 001L, 001M, 001N, 001P, 001Q, 001R		004
150A	NSA5067-08-1		. . NUT used on 001A, 001B, 001C, 001D, 001E, 001F, 001G, 001H, 001J, 001K, 001L, 001M, 001N, 001P, 001Q, 001R		004
160A	A225400450-202		. . ANGLE used on 001A, 001B, 001C, 001D, 001E, 001F, 001G, 001H, 001J, 001K, 001L, 001M, 001N, 001P, 001Q, 001R		002
170A	AH5702-85		. . CONTAINER ASSY-OXYGEN used on 001A, 001D, 001J, 001K, 001P		001
-170B	22C150150080001		. . CONTAINER ASSY-OXYGEN used on 001B, 001F		001
-170C	22C150150320001		. . CONTAINER ASSY-OXYGEN PRE VSB A2-254-25-057 used on 001C, 001R		001

- ITEM NOT ILLUSTRATED

FIG. ITEM	PART NUMBER	AIRLINE STOCK NUMBER	NOMENCLATURE 1234567	EFF CODE	UNITS PER ASSY
-170D	G2F212-85		. . CONTAINER ASSY-OXYGEN POST SB 35-1020 PRE VSB A2-254-25-087 used on 001E, 001G, 001L, 001Q		001
-170E	22C150150320003		. . CONTAINER ASSY-OXYGEN used on 001C, 001H, 001R		001
-170F	S2F212-85		. . CONTAINER ASSY-OXYGEN used on 001A, 001D, 001J, 001K, 001L, 001P		001
-170G	AH5702-25		. . CONTAINER ASSY-OXYGEN used on 001M, 001N		001
-170H	22G150150170400		. . CONTAINER ASSY-OXYGEN POST VSB A2-254-25-078 used on 001N		001
-170J	22G150150320400		. . CONTAINER ASSY-OXYGEN POST VSB A2-254-25-057 POST VSB A2-254-25-087 used on 001C, 001E		001
180A	NAS1096-2-5		. . SCREW PRE VSB A2-254-25-057 PRE VSB A2-254-25-078 PRE VSB A2-254-25-087 BUY PN NAS1801-08-5 used on 001A, 001B, 001C, 001D, 001E, 001F, 001G, 001H, 001J, 001K, 001L, 001M, 001N, 001P, 001Q, 001R		012
-180B	NAS1096-2-5		. . SCREW POST VSB A2-254-25-057 POST VSB A2-254-25-078 POST VSB A2-254-25-087 BUY PN NAS1801-08-5 used on 001C, 001E, 001N, 001P		008

- ITEM NOT ILLUSTRATED

FIG. ITEM	PART NUMBER	AIRLINE STOCK NUMBER	NOMENCLATURE 1234567	EFF CODE	UNITS PER ASSY
-185A	NAS1801-08-6		. . SCREW POST VSB A2-254-25-057 POST VSB A2-254-25-078 POST VSB A2-254-25-087 used on 001C, 001E, 001N, 001P		004
190A	AN960C8		. . WASHER PRE VSB A2-254-25-057 PRE VSB A2-254-25-078 PRE VSB A2-254-25-087 BUY PN NAS1149CN832R used on 001A, 001B, 001C, 001D, 001E, 001F, 001G, 001H, 001J, 001K, 001L, 001M, 001N, 001P, 001Q, 001R		019
-190B	AN960C8		. . WASHER POST VSB A2-254-25-057 POST VSB A2-254-25-078 POST VSB A2-254-25-087 BUY PN NAS1149CN832R used on 001C, 001E, 001N, 001P		015
-195A	NAS1149CN832R		. . WASHER POST VSB A2-254-25-057 POST VSB A2-254-25-078 POST VSB A2-254-25-087 used on 001C, 001E, 001N, 001P		004
200A	A225400451-200		. . STUD used on 001A, 001B, 001C, 001D, 001E, 001F, 001G, 001J, 001K, 001L, 001P, 001Q, 001R		002
-200B	A225400451-202		. . STUD used on 001H		002
210A	A225401222-500		. . POST ASSY used on 001A, 001C, 001D, 001H, 001J, 001N, 001R		001

- ITEM NOT ILLUSTRATED

FIG. ITEM	PART NUMBER	AIRLINE STOCK NUMBER	NOMENCLATURE 1234567	EFF CODE	UNITS PER ASSY
-210B	A225401222-508		. . POST ASSY used on 001B, 001F		001
-210C	A225401222-504		. . POST ASSY used on 001L, 001M		001
-210D	A225401222-512		. . POST ASSY used on 001K		001
-210E	A225401222-514		. . POST ASSY used on 001E, 001G, 001P, 001Q		001
213A	NAS514P832-4		. . . SCREW used on 210A, 210B, 210C, 210D, 210E		004
215A	NAS1068A08		. . . NUT BUY PN MS21075L08 used on 210A, 210B, 210C, 210D, 210E		004
220A	NAS1096-2-7		. . SCREW BUY PN NAS1801-08-7 used on 001A, 001B, 001C, 001D, 001E, 001F, 001G, 001H, 001J, 001K, 001L, 001M, 001N, 001P, 001Q, 001R		005
230A	2634DP437-110		. . CAP used on 001A, 001B, 001C, 001D, 001E, 001F, 001G, 001H, 001J, 001K, 001L, 001M, 001N, 001P, 001Q, 001R		005
240A	NAS1096-3-9		. . SCREW BUY PN NAS1801-3-9 used on 001A, 001B, 001C, 001D, 001E, 001F, 001G, 001H, 001J, 001K, 001L, 001M, 001N, 001P, 001Q, 001R		001

- ITEM NOT ILLUSTRATED

FIG. ITEM	PART NUMBER	AIRLINE STOCK NUMBER	NOMENCLATURE 1234567	EFF CODE	UNITS PER ASSY
250A	A2547577004800		. . DISPENSER-TOILET SEAT COVER used on 001E, 001G, 001H, 001K, 001P, 001Q A254-75770-048-00		001
260A	NAS1100-08-4		. . SCREW used on 001E, 001G, 001H, 001K, 001P, 001Q		002
270A	A2547380206000		. . SUPPORT POST SB 25-1214 used on 001C, 001R		001
280A	NAS1096-2-7		. . SCREW POST SB 25-1214 BUY PN NAS1801-08-7 used on 001C, 001R		002
290A	NAS1149CN832R		. . WASHER POST SB 25-1214 used on 001C, 001R		002
-300A	NAS1833C08-370		. . INSERT POST SB 25-1214 used on 001C, 001R		002
310A	A225400231-362		. . STRIP-REINFORCING USE AS REQUIRED POST SB 25-1314 used on 001K, 001M, 001N		AR
420A	A225401236-200		. . ANGLE POST SB 25-1289 used on 001P, 001Q, 001R		001
430A	NAS1149C0332R		. . WASHER used on 001P, 001Q, 001R		009

- ITEM NOT ILLUSTRATED

FIG. ITEM	PART NUMBER	AIRLINE STOCK NUMBER	NOMENCLATURE 1234567	EFF CODE	UNITS PER ASSY
440A	NAS1096-3-7		. . SCREW BUY PN NAS1801-3-7 used on 001P, 001Q, 001R		004
-450A	NAS1833C3-250		. . INSERT used on 001P, 001Q, 001R		005
460A	NAS1096-3-5		. . SCREW BUY PN NAS1801-3-5 used on 001P, 001Q, 001R		005

- ITEM NOT ILLUSTRATED

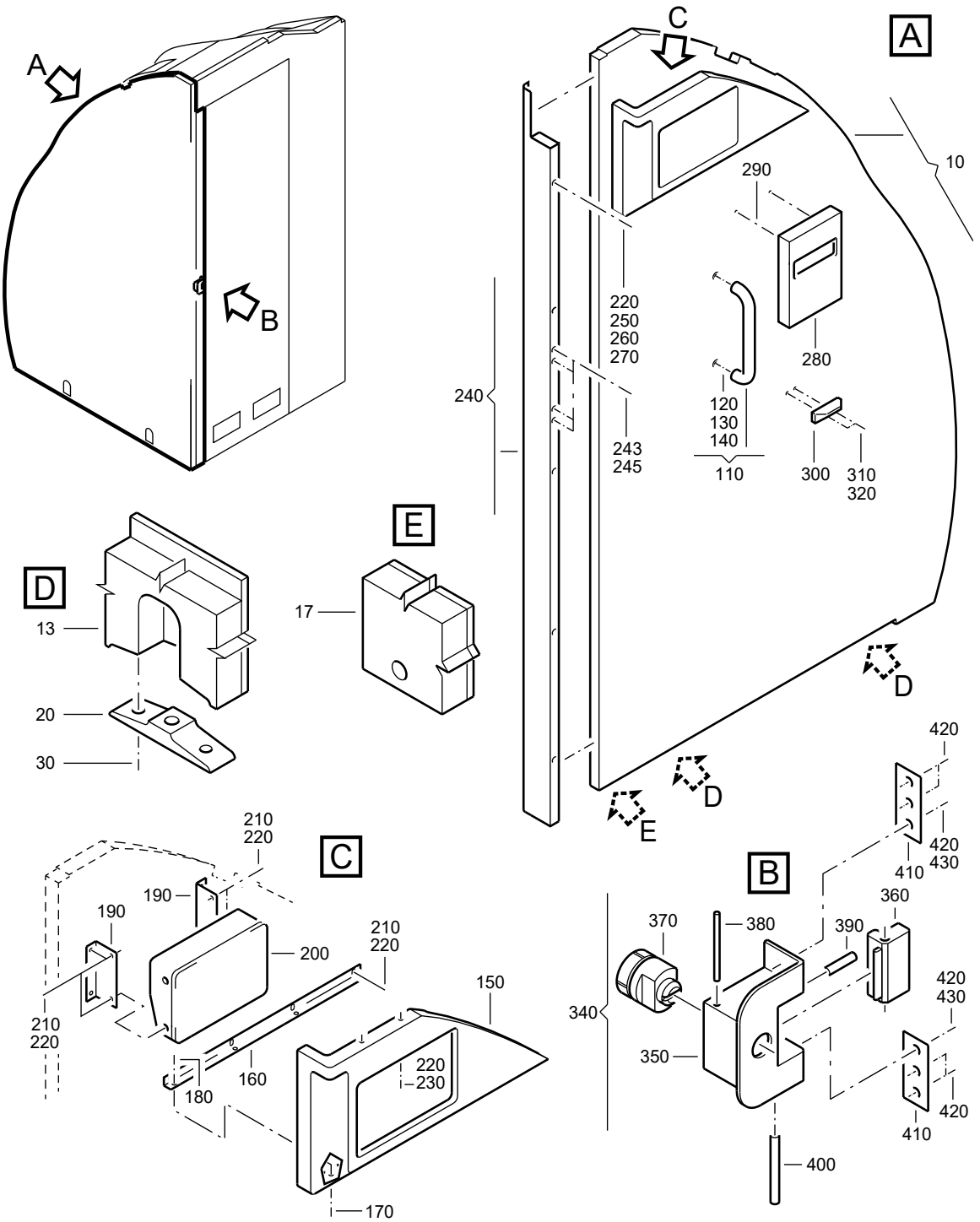

F_PL_254151_06_C_01_00

WALL-SIDE
Figure 06C/EN254151SHEET06C01

FIG. ITEM	PART NUMBER	AIRLINE STOCK NUMBER	NOMENCLATURE 1234567		EFF CODE	UNITS PER ASSY
06C						
-001A	D2549020504065		. WALL-SIDE used on 040A (25415101D) SEE 25-41-51-01D FOR NHA	NP		RF
-001B	D2549030501065		. WALL-SIDE used on 040C (25415101D) SEE 25-41-51-01D FOR NHA	NP		RF
-001C	D2549020504265		. WALL-SIDE used on 040D (25415101D) SEE 25-41-51-01D FOR NHA	NP		RF
-001D	D2549010505265		. WALL-SIDE used on 040E (25415101D) SEE 25-41-51-01D FOR NHA	NP		RF
-001E	D2549020600465		. WALL-SIDE PRE VSB A2-254-25-036 used on 040K (254151410) SEE 25-41-51-410 FOR NHA	NP		RF
-001F	D2549010505665		. WALL-SIDE used on 040H (25415101D), 040K (25415101G) SEE 25-41-51-01D FOR NHA SEE 25-41-51-01G FOR NHA	NP		RF
-001G	D2549030501865		. WALL-SIDE used on 040J (25415101D) SEE 25-41-51-01D FOR NHA	NP		RF
-001H	D2549020600865		. WALL-SIDE used on 040J (25415101E) SEE 25-41-51-01E FOR NHA	NP		RF
-001J	D2549030502465		. WALL-SIDE used on 040C (25415101F) SEE 25-41-51-01F FOR NHA	NP		RF

- ITEM NOT ILLUSTRATED

FIG. ITEM	PART NUMBER	AIRLINE STOCK NUMBER	NOMENCLATURE 1234567		EFF CODE	UNITS PER ASSY
-001K	D2549030502665		. WALL-SIDE used on 040H (25415101F) SEE 25-41-51-01F FOR NHA	NP		RF
-001L	D2549020603065		. WALL-SIDE used on 040D (25415101G) SEE 25-41-51-01G FOR NHA	NP		RF
-001M	D2549010508865		. WALL-SIDE used on 040L (25415101G) SEE 25-41-51-01G FOR NHA	NP		RF
-001N	D2549030505465		. WALL-SIDE used on 040J (25415101J) SEE 25-41-51-01J FOR NHA	NP		RF
-001P	D2549020504165		. WALL-SIDE used on 040P (25415101D) SEE 25-41-51-01D FOR NHA	NP		RF
-001Q	R22540112800065		. WALL-SIDE POST VSB A2-254-25-036 used on 040Q (254151410) SEE 25-41-51-410 FOR NHA	NP		RF
010A	A225401231-546		. . WALL ASSY-SIDE,AFT used on 001A			001
-010B	A225401231-544		. . WALL ASSY-SIDE,AFT used on 001B			001
-010C	A225401231-550		. . WALL ASSY-SIDE,AFT used on 001C			001
-010D	A225401231-548		. . WALL ASSY-SIDE,AFT used on 001D			001
-010E	A225401231-554		. . WALL ASSY-SIDE,AFT used on 001E, 001Q			001

- ITEM NOT ILLUSTRATED

FIG. ITEM	PART NUMBER	AIRLINE STOCK NUMBER	NOMENCLATURE 1234567	EFF CODE	UNITS PER ASSY
-010F	A225401231-560		. . WALL ASSY-SIDE,AFT used on 001F		001
-010G	A225401231-562		. . WALL ASSY-SIDE,AFT used on 001G, 001J, 001N		001
-010H	A225401231-574		. . WALL ASSY-SIDE,AFT used on 001H		001
-010J	A225401231-580		. . WALL ASSY-SIDE,AFT used on 001K		001
-010K	A225401231-600		. . WALL ASSY-SIDE,AFT used on 001L		001
-010L	A225401231-604		. . WALL ASSY-SIDE,AFT used on 001M		001
-010M	A2254012318546		. . WALL ASSY-SIDE,AFT used on 001P		001
013A	A225400231-202		. . . BRACKET BUY PN A225491004-002 used on 010A, 010B, 010C, 010D, 010E, 010F, 010G, 010H, 010J, 010K, 010L, 010M		002
017A	A225400231-214		. . . BRACKET BUY PN A225491004-232 used on 010A, 010B, 010C, 010D, 010E, 010F, 010G, 010H, 010J, 010K, 010L, 010M		001
020A	A225400232-208		. . . FITTING used on 010A, 010B, 010C, 010D, 010E, 010F, 010G, 010H, 010J, 010K, 010L, 010M		002

- ITEM NOT ILLUSTRATED

FIG. ITEM	PART NUMBER	AIRLINE STOCK NUMBER	NOMENCLATURE 1234567	EFF CODE	UNITS PER ASSY
030A	NAS1102E4-10		. . . SCREW used on 010A, 010B, 010C, 010D, 010E, 010F, 010G, 010H, 010J, 010K, 010L, 010M		004
-040A	NAS1833C08-370		. . . INSERT USAGE RANGE FROM 050 TO 070 used on 010A, 010B, 010C, 010D, 010E, 010F, 010G, 010H, 010J, 010K, 010L, 010M		060
-050A	NAS1835C08		. . . INSERT used on 010A, 010B, 010C, 010D, 010E, 010F, 010G, 010H, 010J, 010K, 010L, 010M		007
-060A	NAS1833C3-370		. . . INSERT used on 010A, 010B, 010C, 010D, 010E, 010F, 010G, 010H, 010J, 010K, 010L, 010M		029
-070A	NSA5054-5		. . . INSERT used on 010A, 010B, 010C, 010D, 010E, 010F, 010G, 010H, 010J, 010K, 010L, 010M		012
-080A	NSA5054-3		. . . INSERT used on 010A, 010B, 010C, 010D, 010E, 010F, 010G, 010H, 010J, 010K, 010L, 010M		001
-090A	NSA5054-4		. . . INSERT used on 010A, 010B, 010C, 010D, 010E, 010F, 010G, 010H, 010J, 010K, 010L, 010M		008

- ITEM NOT ILLUSTRATED

FIG. ITEM	PART NUMBER	AIRLINE STOCK NUMBER	NOMENCLATURE 1234567	EFF CODE	UNITS PER ASSY
-100A	NSA935405-01		. . . MOUNT used on 010A, 010B, 010C, 010D, 010E, 010F, 010G, 010H, 010J, 010K, 010L, 010M		015
110A	550-33-300MBB		. . HANDLE ASSY used on 001A, 001C, 001D, 001F, 001H, 001P		001
-110B	550MBB1		. . HANDLE ASSY used on 001B, 001E, 001G, 001J, 001K, 001L, 001M, 001N, 001Q		001
120A	S7224		. . . SCREW-SPECIAL used on 110A, 110B		002
130A	8534		. . . PIN-SECURITY used on 110A, 110B		002
140A	8587		. . . WASHER-SPECIAL used on 110A, 110B		002
150A	A225401410-502		. . COVER-OXYGEN CONTAIN-ER ASSY used on 001A, 001B, 001C, 001D, 001F, 001H, 001K, 001L, 001M, 001P		001
-150B	A225401410-506		. . COVER-OXYGEN CONTAIN-ER ASSY used on 001E, 001Q		001
-150C	A225401410-504		. . COVER-OXYGEN CONTAIN-ER ASSY used on 001G, 001J, 001N		001

- ITEM NOT ILLUSTRATED

FIG. ITEM	PART NUMBER	AIRLINE STOCK NUMBER	NOMENCLATURE 1234567	EFF CODE	UNITS PER ASSY
160A	A225400450-204		. . ANGLE used on 001A, 001B, 001C, 001D, 001E, 001F, 001G, 001H, 001J, 001K, 001L, 001M, 001N, 001P, 001Q		001
170A	NAS1102-08-5		. . SCREW used on 001A, 001B, 001C, 001D, 001E, 001F, 001G, 001H, 001J, 001K, 001L, 001M, 001N, 001P, 001Q		004
180A	NSA5067-08-1		. . NUT used on 001A, 001B, 001C, 001D, 001E, 001F, 001G, 001H, 001J, 001K, 001L, 001M, 001N, 001P, 001Q		004
190A	A225400450-202		. . ANGLE used on 001A, 001B, 001C, 001D, 001E, 001F, 001G, 001H, 001J, 001K, 001L, 001M, 001N, 001P, 001Q		002
200A	AH5702-25		. . CONTAINER ASSY-OXYGEN used on 001A		001
-200B	22C150150320001		. . CONTAINER ASSY-OXYGEN used on 001B		001
-200C	AH5702-85		. . CONTAINER ASSY-OXYGEN used on 001C, 001D, 001F, 001P		001
-200D	AH5702-16		. . CONTAINER ASSY-OXYGEN PRE VSB A2-254-25-036 used on 001E		001
-200E	AH5702-51		. . CONTAINER ASSY-OXYGEN used on 001G		001

- ITEM NOT ILLUSTRATED

FIG. ITEM	PART NUMBER	AIRLINE STOCK NUMBER	NOMENCLATURE 1234567	EFF CODE	UNITS PER ASSY
-200F	22C150150170001		. . CONTAINER ASSY-OXYGEN used on 001H		001
-200G	G2F212-51		. . CONTAINER ASSY-OXYGEN POST SB 35-1020 used on 001J, 001N		001
-200H	G2F212-85		. . CONTAINER ASSY-OXYGEN POST SB 35-1020 used on 001K, 001L		001
-200J	G2F212-85		. . CONTAINER ASSY-OXYGEN used on 001M		001
-200K	22G150150060400		. . CONTAINER ASSY-OXYGEN POST VSB A2-254-25-036 used on 001Q		001
210A	NAS1096-2-5		. . SCREW PRE VSB A2-254-25-036 BUY PN NAS1801-08-5 used on 001A, 001B, 001C, 001D, 001E, 001F, 001G, 001H, 001J, 001K, 001L, 001M, 001N, 001P		008
-210B	NAS1096-2-5		. . SCREW POST VSB A2-254-25-036 BUY PN NAS1801-08-5 used on 001Q		004
-212A	NAS1801-08-5		. . SCREW POST VSB A2-254-25-036 used on 001Q		004
220A	AN960C8		. . WASHER BUY PN NAS1149CN832R used on 001A, 001B, 001C, 001D, 001E, 001F, 001G, 001H, 001J, 001K, 001P, 001Q		013

- ITEM NOT ILLUSTRATED

FIG. ITEM	PART NUMBER	AIRLINE STOCK NUMBER	NOMENCLATURE 1234567	EFF CODE	UNITS PER ASSY
-220B	NAS1149CN832R		. . WASHER used on 001L, 001M, 001N		013
230A	A225400451-202		. . STUD used on 001A, 001B, 001C, 001D, 001E, 001F, 001G, 001H, 001J, 001K, 001L, 001M, 001N, 001P, 001Q		002
240A	A225401222-516		. . POST ASSY used on 001A		001
-240B	A225401222-500		. . POST ASSY used on 001B, 001C, 001D, 001L, 001P		001
-240C	A225401222-518		. . POST ASSY used on 001E, 001Q		001
-240D	A225401222-502		. . POST ASSY used on 001F, 001H, 001K, 001M		001
-240E	A225401222-506		. . POST ASSY used on 001G, 001J, 001N		001
243A	NAS514P832-4		. . . SCREW used on 240A, 240B, 240C, 240D, 240E		004
245A	NAS1068A08		. . . NUT BUY PN MS21075L08 used on 240A, 240B, 240C, 240D, 240E		004
250A	NAS1096-2-7		. . SCREW BUY PN NAS1801-08-7 used on 001A, 001B, 001C, 001D, 001E, 001F, 001G, 001H, 001J, 001K, 001L, 001M, 001N, 001P, 001Q		005

- ITEM NOT ILLUSTRATED

FIG. ITEM	PART NUMBER	AIRLINE STOCK NUMBER	NOMENCLATURE 1234567	EFF CODE	UNITS PER ASSY
260A	2634DP437-110		. . CAP used on 001A, 001B, 001C, 001D, 001E, 001F, 001G, 001H, 001J, 001K, 001L, 001M, 001N, 001P, 001Q		005
270A	NAS1096-3-9		. . SCREW BUY PN NAS1801-3-9 used on 001A, 001B, 001C, 001D, 001E, 001F, 001G, 001H, 001J, 001K, 001L, 001M, 001N, 001P, 001Q		001
280A	A2547577004800		. . DISPENSER-TOILET SEAT COVER used on 001A, 001C, 001D, 001F, 001H, 001K, 001M, 001P A254-75770-048-00		001
-280B	A2547577000600		. . DISPENSER-TOILET SEAT COVER used on 001E, 001Q		001
-280C	A2547577007000		. . DISPENSER-TOILET SEAT COVER used on 001G, 001J, 001N		001
290A	NAS1100-08-4		. . SCREW used on 001A, 001C, 001D, 001E, 001F, 001G, 001H, 001J, 001K, 001M, 001N, 001P, 001Q		002
300A	A2547380206000		. . SUPPORT POST SB 25-1214 used on 001L		001
-300B	A2547380202600		. . SUPPORT POST SB 25-1214 used on 001E, 001Q		001

- ITEM NOT ILLUSTRATED

FIG. ITEM	PART NUMBER	AIRLINE STOCK NUMBER	NOMENCLATURE 1234567	EFF CODE	UNITS PER ASSY
310A	NAS1096-2-7		. . SCREW POST SB 25-1214 BUY PN NAS1801-08-7 used on 001E, 001L, 001Q		002
320A	NAS1149CN832R		. . WASHER POST SB 25-1214 used on 001E, 001L, 001Q		002
-330A	NAS1833C08-370		. . INSERT POST SB 25-1214 used on 001E, 001L, 001Q		002
340A	A225400208-000		. . DEVICE ASSY-EMERGENCY UNLOCKING,SINGLE DOOR POST SB 25-1316 used on 001L		001
350A	A225400208-200		. . . HOUSING-EMERGENCY UN-LOCKING DEVICE used on 340A		001
360A	A225400208-204		. . . STRIKE-EMERGENCY UN-LOCKING DEVICE used on 340A		001
370A	A225400208-202		. . . PIVOT-EMERGENCY UN-LOCKING DEVICE used on 340A		001
380A	A225400208-210		. . . PIN used on 340A		001
390A	SM1275-1KNM04		. . . CATCH-SNAP used on 340A		001
400A	A225400208-208		. . . BOLT used on 340A		001

- ITEM NOT ILLUSTRATED

FIG. ITEM	PART NUMBER	AIRLINE STOCK NUMBER	NOMENCLATURE 1234567	EFF CODE	UNITS PER ASSY
410A	A225400221-202		. . PLATE POST SB 25-1316 used on 001L		002
420A	NAS514P832-7		. . SCREW POST SB 25-1316 used on 001L		006
430A	NSA5067-08-1		. . NUT POST SB 25-1316 used on 001L		002

- ITEM NOT ILLUSTRATED

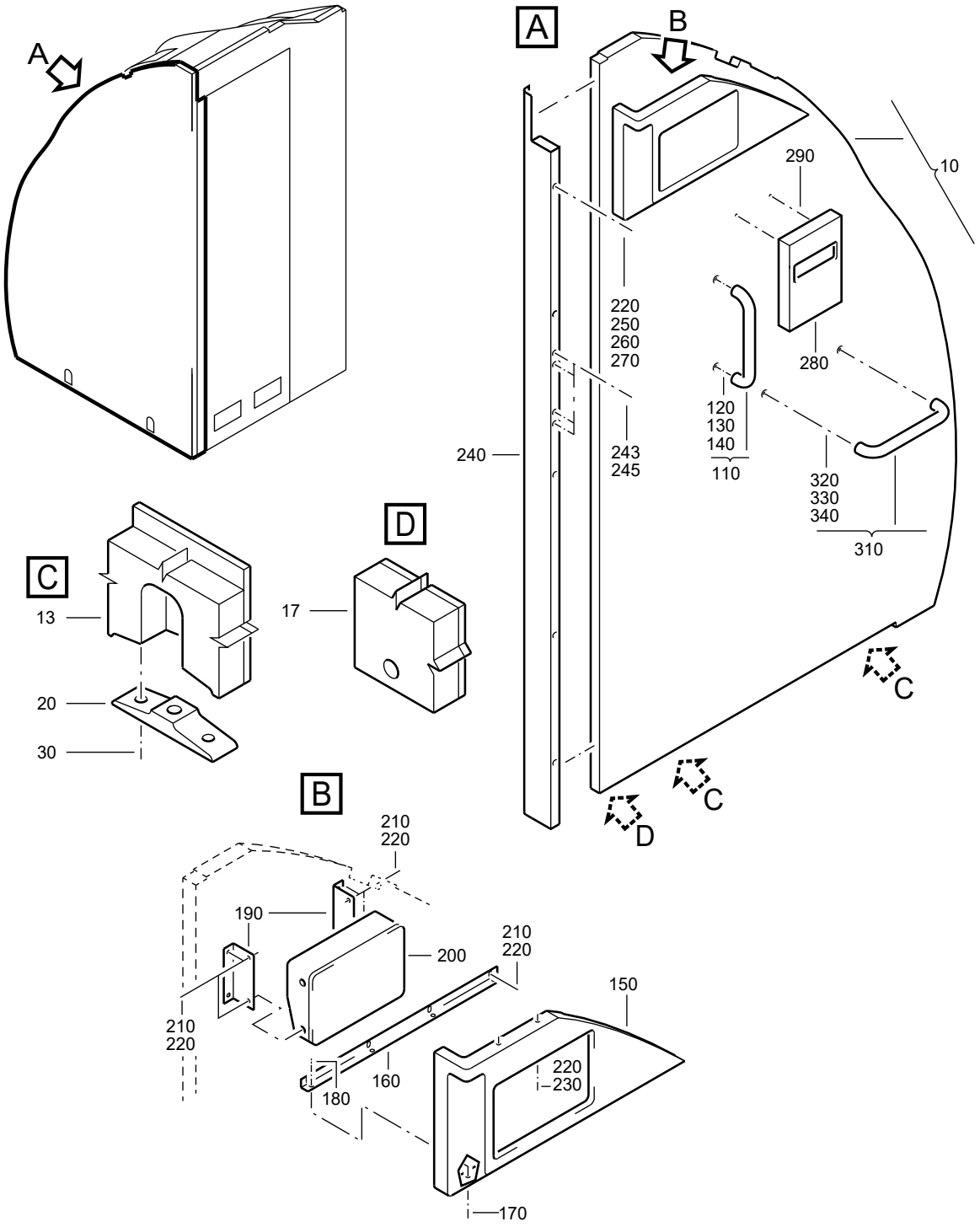

F_PL_254151_06_D_01_00

WALL-SIDE
Figure 06D/EN254151SHEET06D01

FIG. ITEM	PART NUMBER	AIRLINE STOCK NUMBER	NOMENCLATURE 1234567		EFF CODE	UNITS PER ASSY
06D						
-001A	D2549020601065		. WALL-SIDE used on 040F (25415101F) SEE 25-41-51-01F FOR NHA	NP		RF
-001B	D2549010507065		. WALL-SIDE used on 040E (25415101F) SEE 25-41-51-01F FOR NHA	NP		RF
-001C	D2549020602065		. WALL-SIDE used on 040G (25415101F), 040M (25415101N) SEE 25-41-51-01F FOR NHA SEE 25-41-51-01N FOR NHA	NP		RF
-001D	D2549020506065		. WALL-SIDE used on 040J (25415101F) SEE 25-41-51-01F FOR NHA	NP		RF
-001E	D2549020602465		. WALL-SIDE used on 040L (25415101F) SEE 25-41-51-01F FOR NHA	NP		RF
-001F	D2549030503465		. WALL-SIDE used on 040M (25415101F) SEE 25-41-51-01F FOR NHA	NP		RF
-001G	D2549010508065		. WALL-SIDE used on 040A (25415101G) SEE 25-41-51-01G FOR NHA	NP		RF
-001H	D2549020602665		. WALL-SIDE used on 040B (25415101G) SEE 25-41-51-01G FOR NHA	NP		RF
-001J	D2549030504865		. WALL-SIDE used on 040A (25415101J) SEE 25-41-51-01J FOR NHA	NP		RF

- ITEM NOT ILLUSTRATED

FIG. ITEM	PART NUMBER	AIRLINE STOCK NUMBER	NOMENCLATURE 1234567		EFF CODE	UNITS PER ASSY
-001K	D2549020603465		. WALL-SIDE used on 040E (25415101G) SEE 25-41-51-01G FOR NHA	NP		RF
-001L	D2549010508265		. WALL-SIDE PRE VSB A2-254-25-080 used on 040F (25415101G) SEE 25-41-51-01G FOR NHA	NP		RF
-001M	D2549020505265		. WALL-SIDE used on 040N (25415101F) SEE 25-41-51-01F FOR NHA	NP		RF
-001N	R22540114500065		. WALL-SIDE POST VSB A2-254-25-080 used on 040S (25415101G) SEE 25-41-51-01G FOR NHA	NP		RF
010A	A225401231-576		. . WALL ASSY-SIDE,AFT used on 001A			001
-010B	A225401231-502		. . WALL ASSY-SIDE,AFT used on 001B			001
-010C	A225401231-578		. . WALL ASSY-SIDE,AFT used on 001C			001
-010D	A225401231-504		. . WALL ASSY-SIDE,AFT used on 001D, 001M			001
-010E	A225401231-582		. . WALL ASSY-SIDE,AFT used on 001E			001
-010F	A225401231-584		. . WALL ASSY-SIDE,AFT used on 001F, 001J			001
-010G	A225401231-588		. . WALL ASSY-SIDE,AFT used on 001G			001
-010H	A225401231-596		. . WALL ASSY-SIDE,AFT used on 001H			001

- ITEM NOT ILLUSTRATED

FIG. ITEM	PART NUMBER	AIRLINE STOCK NUMBER	NOMENCLATURE 1234567	EFF CODE	UNITS PER ASSY
-010J	A225401231-594		. . WALL ASSY-SIDE,AFT used on 001L, 001N		001
-010K	A225401231-592		. . WALL ASSY-SIDE,AFT used on 001K		001
013A	A225400231-202		. . . BRACKET BUY PN A225491004-002 used on 010A, 010B, 010C, 010D, 010E, 010F, 010G, 010H, 010J, 010K		002
017A	A225400231-214		. . . BRACKET BUY PN A225491004-232 used on 010A, 010B, 010C, 010D, 010E, 010F, 010G, 010H, 010J, 010K		001
020A	A225400232-208		. . . FITTING used on 010A, 010B, 010C, 010D, 010E, 010F, 010G, 010H, 010J, 010K		002
030A	NAS1102E4-10		. . . SCREW used on 010A, 010B, 010C, 010D, 010E, 010F, 010G, 010H, 010J, 010K		004
-040A	NAS1833C08-370		. . . INSERT used on 010A, 010B, 010C, 010D, 010E, 010F, 010G, 010H, 010J, 010K		051
-050A	NAS1835C08		. . . INSERT used on 010A, 010B, 010C, 010D, 010E, 010F, 010G, 010H, 010J, 010K		007

- ITEM NOT ILLUSTRATED

FIG. ITEM	PART NUMBER	AIRLINE STOCK NUMBER	NOMENCLATURE 1234567	EFF CODE	UNITS PER ASSY
-060A	NAS1833C3-370		. . . INSERT used on 010A, 010B, 010C, 010D, 010E, 010F, 010G, 010H, 010J, 010K		029
-070A	NSA5054-5		. . . INSERT used on 010A, 010B, 010C, 010D, 010E, 010F, 010G, 010H, 010J, 010K		012
-080A	NSA5054-3		. . . INSERT used on 010A, 010B, 010C, 010D, 010E, 010F, 010G, 010H, 010J, 010K		001
-090A	NSA5054-4		. . . INSERT used on 010A, 010B, 010C, 010D, 010E, 010F, 010G, 010H, 010J, 010K		008
-100A	NSA935405-01		. . . MOUNT used on 010A, 010B, 010C, 010D, 010E, 010F, 010G, 010H, 010J, 010K		018
110A	550MBB1		. . HANDLE ASSY used on 001D, 001E, 001L, 001M, 001N		001
-110B	550-33-300MBB		. . HANDLE ASSY used on 001A, 001B, 001C, 001F, 001G, 001H, 001J, 001K		001
120A	S7224		. . . SCREW-SPECIAL used on 110A, 110B		002
130A	8534		. . . PIN-SECURITY used on 110A, 110B		002

- ITEM NOT ILLUSTRATED

FIG. ITEM	PART NUMBER	AIRLINE STOCK NUMBER	NOMENCLATURE 1234567	EFF CODE	UNITS PER ASSY
140A	8587		. . . WASHER-SPECIAL used on 110A, 110B		002
150A	A225401410-502		. . COVER-OXYGEN CONTAIN-ER ASSY used on 001A, 001B, 001C, 001E, 001F, 001G, 001H, 001J, 001K, 001L, 001N		001
-150B	A225401410-504		. . COVER-OXYGEN CONTAIN-ER ASSY used on 001D, 001M		001
160A	A225400450-204		. . ANGLE used on 001A, 001B, 001C, 001D, 001E, 001F, 001G, 001H, 001J, 001K, 001L, 001M, 001N		001
170A	NAS1102-08-5		. . SCREW used on 001A, 001B, 001C, 001D, 001E, 001F, 001G, 001H, 001J, 001K, 001L, 001M, 001N		004
180A	NSA5067-08-1		. . NUT used on 001A, 001B, 001C, 001D, 001E, 001F, 001G, 001H, 001J, 001K, 001L, 001M, 001N		004
190A	A225400450-202		. . ANGLE used on 001A, 001B, 001C, 001D, 001E, 001F, 001G, 001H, 001J, 001K, 001L, 001M, 001N		002
200A	S2F212-85		. . CONTAINER ASSY-OXYGEN PRE VSB A2-254-25-057 used on 001E, 001K, 001L		001
-200B	AH5702-51		. . CONTAINER ASSY-OXYGEN used on 001D		001

- ITEM NOT ILLUSTRATED

FIG. ITEM	PART NUMBER	AIRLINE STOCK NUMBER	NOMENCLATURE 1234567	EFF CODE	UNITS PER ASSY
-200C	22C150150320001		. . CONTAINER ASSY-OXYGEN used on 001F, 001H		001
-200D	S2F212-51		. . CONTAINER ASSY-OXYGEN POST SB 35-1020 used on 001D, 001M		001
-200E	22C150150320003		. . CONTAINER ASSY-OXYGEN used on 001F, 001H, 001J		001
-200F	G2F212-85		. . CONTAINER ASSY-OXYGEN POST SB 35-1020 used on 001A, 001B, 001C, 001E, 001G, 001K, 001L		001
-200G	22G150150320400		. . CONTAINER ASSY-OXYGEN POST VSB A2-254-25-057 POST VSB A2-254-25-080 used on 001E, 001N		001
210A	NAS1096-2-5		. . SCREW PRE VSB A2-254-25-057 PRE VSB A2-254-25-080 BUY PN NAS1801-08-5 used on 001A, 001B, 001C, 001D, 001E, 001F, 001G, 001H, 001J, 001K, 001L, 001M		008
-210B	NAS1096-2-5		. . SCREW POST VSB A2-254-25-057 POST VSB A2-254-25-080 BUY PN NAS1801-08-5 used on 001E, 001N		004
-212A	NAS1801-08-6		. . SCREW POST VSB A2-254-25-057 POST VSB A2-254-25-080 used on 001E, 001N		004

- ITEM NOT ILLUSTRATED

FIG. ITEM	PART NUMBER	AIRLINE STOCK NUMBER	NOMENCLATURE 1234567	EFF CODE	UNITS PER ASSY
220A	AN960C8		. . WASHER PRE VSB A2-254-25-057 BUY PN NAS1149CN832R used on 001B, 001C, 001D, 001E, 001F, 001G, 001M		013
-220B	NAS1149CN832R		. . WASHER used on 001A, 001H, 001J, 001K, 001L, 001N		013
-220C	AN960C8		. . WASHER POST VSB A2-254-25-057 BUY PN NAS1149CN832R used on 001E		009
-225A	NAS1149CN832R		. . WASHER POST VSB A2-254-25-057 used on 001E		004
230A	A225400451-202		. . STUD used on 001A, 001B, 001C, 001D, 001E, 001F, 001G, 001H, 001J, 001K, 001L, 001M, 001N		002
240A	A225401222-500		. . POST ASSY used on 001A, 001E, 001F, 001J, 001K, 001L, 001N		001
-240B	A225401222-502		. . POST ASSY used on 001B		001
-240C	A225401222-522		. . POST ASSY used on 001C		001
-240D	A225401222-506		. . POST ASSY used on 001D, 001M		001
-240E	A225401222-524		. . POST ASSY used on 001G		001

- ITEM NOT ILLUSTRATED

FIG. ITEM	PART NUMBER	AIRLINE STOCK NUMBER	NOMENCLATURE 1234567	EFF CODE	UNITS PER ASSY
-240F	A225401222-526		. . POST ASSY used on 001H		001
243A	NAS514P832-4		. . . SCREW used on 240A, 240B, 240C, 240D, 240E, 240F		004
245A	NAS1068A08		. . . NUT BUY PN MS21075L08 used on 240A, 240B, 240C, 240D, 240E, 240F		004
250A	NAS1096-2-7		. . SCREW BUY PN NAS1801-08-7 used on 001A, 001B, 001C, 001D, 001E, 001F, 001G, 001H, 001J, 001K, 001L, 001M, 001N		005
260A	2634DP437-110		. . CAP used on 001A, 001B, 001C, 001D, 001E, 001F, 001G, 001H, 001J, 001K, 001L, 001M, 001N		004
270A	NAS1096-3-9		. . SCREW BUY PN NAS1801-3-9 used on 001A, 001B, 001C, 001D, 001E, 001F, 001G, 001H, 001J, 001K, 001L, 001M, 001N		001
280A	A2547577004800		. . DISPENSER-TOILET SEAT COVER used on 001A, 001F, 001G, 001H, 001J, 001L, 001N A254-75770-048-00		001
290A	NAS1100-08-4		. . SCREW used on 001A, 001F, 001G, 001H, 001J, 001L, 001N		002

- ITEM NOT ILLUSTRATED

FIG. ITEM	PART NUMBER	AIRLINE STOCK NUMBER	NOMENCLATURE 1234567	EFF CODE	UNITS PER ASSY
-300A	NAS1833C08-370		. . INSERT POST SB 25-1214 used on 001B, 001C		002
310A	550-33-300MBB		. . HANDLE ASSY POST SB 25-1214 used on 001B, 001C		001
320A	S7224		. . . SCREW-SPECIAL used on 310A		002
330A	8534		. . . PIN-SECURITY used on 310A		002
340A	8587		. . . WASHER-SPECIAL used on 310A		002
-350A	3550012		. . RIVET POST SB 25-1214 used on 001B, 001C		006

- ITEM NOT ILLUSTRATED

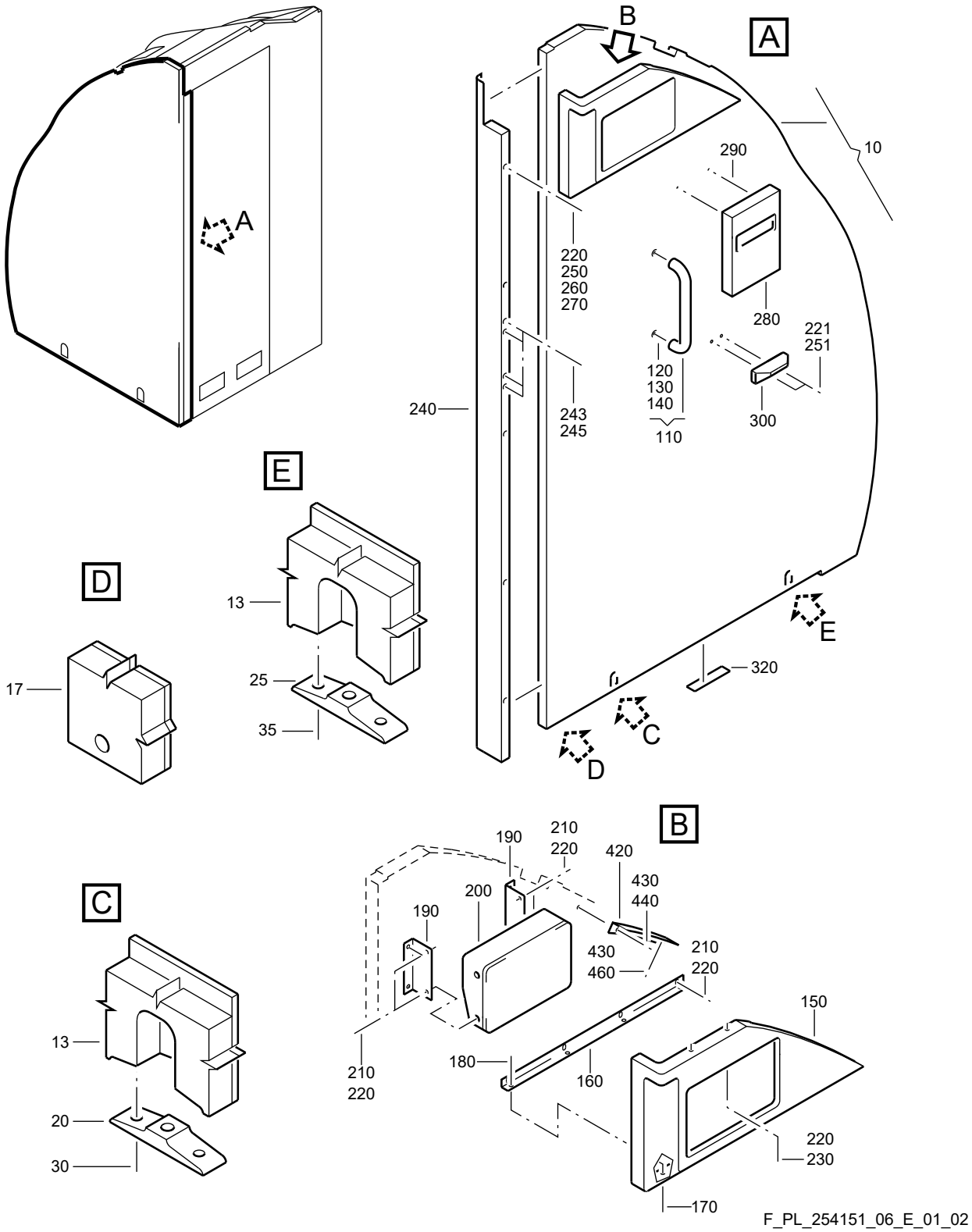

WALL-SIDE
Figure 06E/EN254151SHEET06E01

FIG. ITEM	PART NUMBER	AIRLINE STOCK NUMBER	NOMENCLATURE 1234567		EFF CODE	UNITS PER ASSY
06E						
-001A	D2549010509065		. WALL-SIDE used on 040G (25415101G) SEE 25-41-51-01G FOR NHA	NP		RF
-001B	D2549020601865		. WALL-SIDE used on 040H (25415101G) SEE 25-41-51-01G FOR NHA	NP		RF
-001C	D2549020606665		. WALL-SIDE used on 040A (25415101H) SEE 25-41-51-01H FOR NHA	NP		RF
-001D	D2549020603665		. WALL-SIDE used on 040B (25415101H) SEE 25-41-51-01H FOR NHA	NP		RF
-001E	D2549010509265		. WALL-SIDE used on 040D (25415101H), 040B (25415101J), 040J (25415101K) SEE 25-41-51-01H FOR NHA SEE 25-41-51-01J FOR NHA SEE 25-41-51-01K FOR NHA	NP		RF
-001F	D2549010508665		. WALL-SIDE used on 040E (25415101H) SEE 25-41-51-01H FOR NHA	NP		RF
-001G	D2549020603865		. WALL-SIDE used on 040M (25415101G) SEE 25-41-51-01G FOR NHA	NP		RF
-001H	D2549030503665		. WALL-SIDE used on 040G (25415101H) SEE 25-41-51-01H FOR NHA	NP		RF
-001J	D2549010505065		. WALL-SIDE used on 040G (25415101D) SEE 25-41-51-01D FOR NHA	NP		RF

- ITEM NOT ILLUSTRATED

FIG. ITEM	PART NUMBER	AIRLINE STOCK NUMBER	NOMENCLATURE 1234567		EFF CODE	UNITS PER ASSY
-001K	D2549010506865		. WALL-SIDE used on 040B (25415141B) SEE 25-41-51-41B FOR NHA	NP		RF
-001L	D2549020607065		. WALL-SIDE used on 040E (25415101J) SEE 25-41-51-01J FOR NHA	NP		RF
-001M	D2549030505265		. WALL-SIDE used on 040D (25415101J) SEE 25-41-51-01J FOR NHA	NP		RF
-001N	D2549010508465		. WALL-SIDE used on 040N (25415101G) SEE 25-41-51-01G FOR NHA	NP		RF
-001P	D2549030403065		. WALL-SIDE POST SB 25-1289 used on 040P (25415101J) SEE 25-41-51-01J FOR NHA	NP		RF
-001Q	F2547160007465		. WALL-SIDE POST SB 25-1640 used on 040Q (25415101H), 040M (25415101L) SEE 25-41-51-01H FOR NHA SEE 25-41-51-01L FOR NHA	NP		RF
-001R	D2549010508565		. WALL-SIDE POST SB 25-1289 used on 040P (25415101G) SEE 25-41-51-01G FOR NHA	NP		RF
-001S	D2549010508165		. WALL-SIDE POST SB 25-1289 used on 040Q (25415101G) SEE 25-41-51-01G FOR NHA	NP		RF
010A	A2254012318606		. . WALL ASSY-SIDE,AFT POST SB 25-1314 used on 001A			001

- ITEM NOT ILLUSTRATED

FIG. ITEM	PART NUMBER	AIRLINE STOCK NUMBER	NOMENCLATURE 1234567	EFF CODE	UNITS PER ASSY
-010B	A225401231-586		. . WALL ASSY-SIDE,AFT used on 001B		001
-010C	A225401231-602		. . WALL ASSY-SIDE,AFT used on 001C		001
-010D	A225401231-610		. . WALL ASSY-SIDE,AFT used on 001D		001
-010E	A225401231-608		. . WALL ASSY-SIDE,AFT used on 001E		001
-010F	A225401231-616		. . WALL ASSY-SIDE,AFT used on 001F		001
-010G	A225401231-612		. . WALL ASSY-SIDE,AFT used on 001G		001
-010H	A225401231-544		. . WALL ASSY-SIDE,AFT used on 001H		001
-010J	A225401231-552		. . WALL ASSY-SIDE,AFT used on 001J		001
-010K	A225401231-614		. . WALL ASSY-SIDE,AFT used on 001K		001
-010L	A225401231-620		. . WALL ASSY-SIDE,AFT used on 001L		001
-010M	A225401231-580		. . WALL ASSY-SIDE,AFT used on 001M		001
-010N	A2254012318586		. . WALL ASSY-SIDE,AFT POST SB 25-1314 used on 001N		001
-010P	A225491231-590		. . WALL ASSY-SIDE,AFT POST SB 25-1289 used on 001P		001

- ITEM NOT ILLUSTRATED

FIG. ITEM	PART NUMBER	AIRLINE STOCK NUMBER	NOMENCLATURE 1234567	EFF CODE	UNITS PER ASSY
-010Q	A225411230-556		. . WALL ASSY-SIDE,AFT POST SB 25-1640 used on 001Q		001
-010R	A225491231-508		. . WALL ASSY-SIDE,AFT POST SB 25-1289 used on 001R		001
-010S	A225491231-556		. . WALL ASSY-SIDE,AFT POST SB 25-1289 used on 001S		001
013A	A225400231-202		. . . BRACKET BUY PN A225491004-002 used on 010A, 010B, 010C, 010D, 010E, 010F, 010G, 010H, 010J, 010K, 010L, 010M, 010N, 010P		002
017A	A225400231-214		. . . BRACKET BUY PN A225491004-232 used on 010A, 010B, 010C, 010D, 010E, 010F, 010G, 010H, 010J, 010K, 010L, 010M, 010N, 010P		001
020A	A225400232-208		. . . FITTING used on 010A, 010B, 010C, 010D, 010E, 010F, 010G, 010H, 010J, 010K, 010L, 010M, 010N, 010P, 010Q, 010R, 010S		001
025A	A225400232-208		. . . FITTING used on 010A, 010B, 010C, 010D, 010E, 010F, 010G, 010H, 010J, 010K, 010L, 010M, 010N, 010P		001
-025B	A225400232-216		. . . FITTING used on 010Q, 010R, 010S		001

- ITEM NOT ILLUSTRATED

FIG. ITEM	PART NUMBER	AIRLINE STOCK NUMBER	NOMENCLATURE 1234567	EFF CODE	UNITS PER ASSY
030A	NAS1102E4-10		. . . SCREW used on 010A, 010B, 010C, 010D, 010E, 010F, 010G, 010H, 010J, 010K, 010L, 010M, 010N, 010P		002
-030B	ABS0704-6-50		. . . SCREW used on 010Q, 010R, 010S		002
035A	NAS1102E4-10		. . . SCREW used on 010A, 010B, 010C, 010D, 010E, 010F, 010G, 010H, 010J, 010K, 010L, 010M, 010P		002
-035B	ABS0705-6-50		. . . SCREW used on 010Q, 010R, 010S		002
-040A	NAS1833C08-370		. . . INSERT USAGE RANGE FROM 051 TO 083 used on 010A, 010B, 010C, 010D, 010E, 010F, 010G, 010H, 010J, 010K, 010L, 010M, 010N, 010P, 010Q, 010R, 010S		070
-050A	NAS1835C08		. . . INSERT used on 010A, 010B, 010C, 010D, 010E, 010F, 010G, 010H, 010J, 010K, 010L, 010M, 010N, 010P, 010Q, 010R, 010S		007
-060A	NAS1833C3-370		. . . INSERT USAGE RANGE FROM 026 TO 029 used on 010A, 010B, 010C, 010D, 010E, 010F, 010G, 010H, 010J, 010K, 010L, 010M, 010N, 010P, 010Q, 010R, 010S		027

- ITEM NOT ILLUSTRATED

FIG. ITEM	PART NUMBER	AIRLINE STOCK NUMBER	NOMENCLATURE 1234567	EFF CODE	UNITS PER ASSY
-070A	NSA5054-5		. . . INSERT USAGE RANGE FROM 011 TO 012 used on 010A, 010B, 010C, 010D, 010E, 010F, 010G, 010H, 010J, 010K, 010L, 010M, 010N, 010P, 010Q, 010R, 010S		012
-080A	NSA5054-3		. . . INSERT USAGE RANGE FROM 001 TO 003 used on 010A, 010B, 010C, 010D, 010E, 010F, 010G, 010H, 010J, 010K, 010L, 010M, 010N, 010P, 010Q, 010R, 010S		002
-090A	NSA5054-4		. . . INSERT USAGE RANGE FROM 006 TO 008 used on 010A, 010B, 010C, 010D, 010E, 010F, 010G, 010H, 010J, 010K, 010L, 010M, 010N, 010P, 010Q, 010R, 010S		007
-100A	NSA935405-01		. . . MOUNT used on 010A, 010B, 010C, 010D, 010E, 010F, 010G, 010H, 010J, 010K, 010L, 010M, 010N, 010P, 010Q		010
-105A	NSA5054-08		. . . INSERT USAGE RANGE FROM 002 TO 003 used on 010Q		003
110A	550MBB1		. . HANDLE ASSY used on 001A, 001E, 001H, 001J, 001K, 001L, 001M, 001P, 001Q		001

- ITEM NOT ILLUSTRATED

FIG. ITEM	PART NUMBER	AIRLINE STOCK NUMBER	NOMENCLATURE 1234567	EFF CODE	UNITS PER ASSY
-110B	550-33-300MBB		. . HANDLE ASSY used on 001B, 001C, 001D, 001F, 001G, 001N, 001R, 001S		001
120A	S7224		. . . SCREW-SPECIAL used on 110A, 110B		002
130A	8534		. . . PIN-SECURITY used on 110A, 110B		002
140A	8587		. . . WASHER-SPECIAL used on 110A, 110B		002
150A	A225401410-502		. . COVER-OXYGEN CONTAIN-ER ASSY used on 001A, 001B, 001C, 001D, 001E, 001F, 001G, 001H, 001J, 001K, 001L, 001M, 001N, 001P, 001Q, 001R, 001S		001
160A	A225400450-204		. . ANGLE used on 001A, 001B, 001C, 001D, 001E, 001F, 001G, 001H, 001J, 001K, 001L, 001M, 001N, 001P, 001Q, 001R, 001S		001
170A	NAS1102-08-5		. . SCREW used on 001A, 001B, 001C, 001D, 001E, 001F, 001G, 001H, 001J, 001K, 001L, 001M, 001N, 001P, 001Q, 001R, 001S		004
180A	NSA5067-08-1		. . NUT used on 001A, 001B, 001C, 001D, 001E, 001F, 001G, 001H, 001J, 001K, 001L, 001M, 001N, 001P, 001Q, 001R, 001S		004

- ITEM NOT ILLUSTRATED

FIG. ITEM	PART NUMBER	AIRLINE STOCK NUMBER	NOMENCLATURE 1234567	EFF CODE	UNITS PER ASSY
190A	A225400450-202		. . ANGLE used on 001A, 001B, 001C, 001D, 001E, 001F, 001G, 001H, 001J, 001K, 001L, 001M, 001N, 001P, 001Q, 001R, 001S		002
200A	22C150150320001		. . CONTAINER ASSY-OXYGEN used on 001A, 001D, 001H, 001K, 001Q		001
-200B	G2F212-85		. . CONTAINER ASSY-OXYGEN POST SB 35-1020 used on 001B, 001C, 001E, 001F, 001G, 001J, 001M, 001N, 001R, 001S		001
-200C	G2F212-25		. . CONTAINER ASSY-OXYGEN POST SB 35-1020 used on 001L, 001P		001
-200D	S2F212-85		. . CONTAINER ASSY-OXYGEN used on 001G		001
-200E	22G150150320400		. . CONTAINER ASSY-OXYGEN POST VSB A2-254-25-057 used on 001L		001
210A	NAS1096-2-5		. . SCREW PRE VSB A2-254-25-057 BUY PN NAS1801-08-5 used on 001A, 001B, 001C, 001D, 001E, 001F, 001G, 001H, 001J, 001K, 001L, 001M, 001N, 001P, 001Q, 001R, 001S		012
-210B	NAS1096-2-5		. . SCREW POST VSB A2-254-25-057 BUY PN NAS1801-08-5 used on 001L		008

- ITEM NOT ILLUSTRATED

FIG. ITEM	PART NUMBER	AIRLINE STOCK NUMBER	NOMENCLATURE 1234567	EFF CODE	UNITS PER ASSY
-215A	NAS1801-08-6		. . SCREW POST VSB A2-254-25-057 used on 001L		004
220A	NAS1149CN832R		. . WASHER used on 001A, 001B, 001C, 001D, 001E, 001F, 001G, 001H, 001K, 001L, 001M, 001N, 001P, 001Q, 001R, 001S		019
-220B	AN960C8		. . WASHER BUY PN NAS1149CN832R used on 001J		019
221A	NAS1149CN832R		. . WASHER POST SB 25-1214 used on 001A, 001K		002
230A	A225400451-202		. . STUD used on 001A, 001B, 001C, 001D, 001E, 001F, 001G, 001H, 001J, 001K, 001L, 001M, 001N, 001P, 001Q, 001R, 001S		002
240A	A225401222-500		. . POST ASSY used on 001A, 001C, 001D, 001F, 001H, 001L, 001P, 001Q		001
-240B	A225401222-502		. . POST ASSY used on 001B, 001E, 001G, 001J, 001K, 001M, 001N, 001R		001
-240C	A225401222-524		. . POST ASSY used on 001S		001
243A	NAS514P832-4		. . . SCREW used on 240A, 240B, 240C		004

- ITEM NOT ILLUSTRATED

FIG. ITEM	PART NUMBER	AIRLINE STOCK NUMBER	NOMENCLATURE 1234567	EFF CODE	UNITS PER ASSY
245A	NAS1068A08		. . . NUT BUY PN MS21075L08 used on 240A, 240B, 240C		004
250A	NAS1096-2-7		. . SCREW BUY PN NAS1801-08-7 used on 001A, 001B, 001C, 001D, 001E, 001F, 001G, 001H, 001J, 001K, 001L, 001M, 001N, 001P, 001Q, 001R, 001S		005
251A	NAS1096-2-7		. . SCREW POST SB 25-1214 BUY PN NAS1801-08-7 used on 001A, 001K		002
260A	2634DP437-110		. . CAP used on 001A, 001B, 001C, 001D, 001E, 001F, 001G, 001H, 001J, 001K, 001L, 001M, 001N, 001P, 001Q, 001R, 001S		004
270A	NAS1096-3-9		. . SCREW BUY PN NAS1801-3-9 used on 001A, 001B, 001C, 001D, 001E, 001F, 001G, 001H, 001J, 001K, 001L, 001M, 001N, 001P, 001Q, 001R, 001S		001
280A	A2547577004800		. . DISPENSER-TOILET SEAT COVER used on 001C, 001D, 001L, 001M, 001P, 001S A254-75770-048-00		001
290A	NAS1100-08-4		. . SCREW used on 001C, 001D, 001L, 001M, 001P, 001S		002

- ITEM NOT ILLUSTRATED

FIG. ITEM	PART NUMBER	AIRLINE STOCK NUMBER	NOMENCLATURE 1234567	EFF CODE	UNITS PER ASSY
300A	A2547380206000		. . SUPPORT POST SB 25-1214 used on 001A, 001K		001
-310A	NAS1833C08-370		. . INSERT POST SB 25-1214 used on 001A, 001K		002
320A	A225400231-362		. . STRIP-REINFORCING USE AS REQUIRED used on 001A, 001N, 001R		AR
420A	A225401236-200		. . ANGLE POST SB 25-1289 used on 001P, 001R, 001S		001
430A	NAS1149C0332R		. . WASHER used on 001P, 001R, 001S		009
440A	NAS1096-3-7		. . SCREW BUY PN NAS1801-3-7 used on 001P, 001R, 001S		004
-450A	NAS1833C08-370		. . INSERT used on 001P, 001R, 001S		005
460A	NAS1096-3-5		. . SCREW BUY PN NAS1801-3-5 used on 001P, 001R, 001S		005

- ITEM NOT ILLUSTRATED

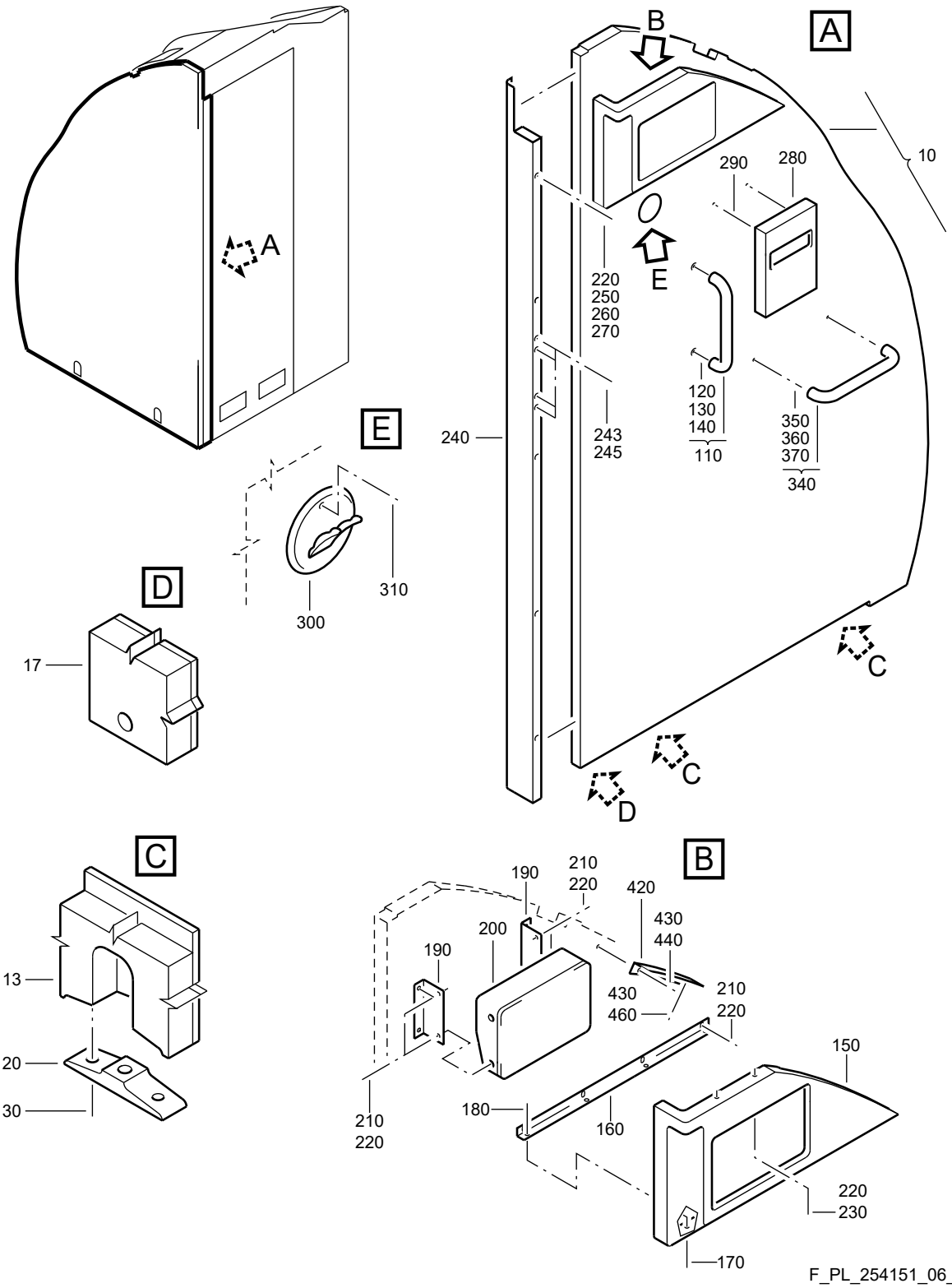

WALL-SIDE
Figure 06F/EN254151SHEET06F01

FIG. ITEM	PART NUMBER	AIRLINE STOCK NUMBER	NOMENCLATURE 1234567		EFF CODE	UNITS PER ASSY
06F						
-001A	D2549030504065		. WALL-SIDE used on 040F (25415101J) SEE 25-41-51-01J FOR NHA	NP		RF
-001B	D2549020506265		. WALL-SIDE used on 040G (25415101J) SEE 25-41-51-01J FOR NHA	NP		RF
-001C	D2549010509465		. WALL-SIDE used on 040H (25415101J) SEE 25-41-51-01J FOR NHA	NP		RF
-001D	D2549020607265		. WALL-SIDE used on 040J (25415101H) SEE 25-41-51-01H FOR NHA	NP		RF
-001E	D2549010509665		. WALL-SIDE used on 040K (25415101J) SEE 25-41-51-01J FOR NHA	NP		RF
-001F	D2549010510465		. WALL-SIDE used on 040L (25415101J) SEE 25-41-51-01J FOR NHA	NP		RF
-001G	D2549030505665		. WALL-SIDE used on 040A (25415101K) SEE 25-41-51-01K FOR NHA	NP		RF
-001H	D2549030504665		. WALL-SIDE used on 040B (25415101K) SEE 25-41-51-01K FOR NHA	NP		RF
-001J	D2549020605265		. WALL-SIDE used on 040C (25415101K) SEE 25-41-51-01K FOR NHA	NP		RF
-001K	D2549030506065		. WALL-SIDE used on 040C (25415141B) SEE 25-41-51-41B FOR NHA	NP		RF

- ITEM NOT ILLUSTRATED

FIG. ITEM	PART NUMBER	AIRLINE STOCK NUMBER	NOMENCLATURE 1234567		EFF CODE	UNITS PER ASSY
-001L	D2549020604265		. WALL-SIDE used on 040E (25415101K) SEE 25-41-51-01K FOR NHA	NP		RF
-001M	D2549010511465		. WALL-SIDE used on 040F (25415101K) SEE 25-41-51-01K FOR NHA	NP		RF
-001N	D2549030504065		. WALL-SIDE used on 040Q (25415101J) SEE 25-41-51-01J FOR NHA	NP		RF
-001P	D2549020506265		. WALL-SIDE used on 040R (25415101J) SEE 25-41-51-01J FOR NHA	NP		RF
010A	A225401231-542		. . WALL ASSY-SIDE,AFT used on 001A			001
-010B	A225401231-504		. . WALL ASSY-SIDE,AFT used on 001B			001
-010C	A225401231-502		. . WALL ASSY-SIDE,AFT used on 001C			001
-010D	A225401231-596		. . WALL ASSY-SIDE,AFT used on 001D			001
-010E	A225401231-558		. . WALL ASSY-SIDE,AFT used on 001E			001
-010F	A225401231-588		. . WALL ASSY-SIDE,AFT used on 001F			001
-010G	A225401231-618		. . WALL ASSY-SIDE,AFT used on 001G			001
-010H	A225401231-532		. . WALL ASSY-SIDE,AFT used on 001H			001
-010J	A225401231-582		. . WALL ASSY-SIDE,AFT used on 001J			001

- ITEM NOT ILLUSTRATED

FIG. ITEM	PART NUMBER	AIRLINE STOCK NUMBER	NOMENCLATURE 1234567	EFF CODE	UNITS PER ASSY
-010K	A2254012318622		. . WALL ASSY-SIDE,AFT POST SB 25-1314 used on 001K		001
-010L	A225401231-574		. . WALL ASSY-SIDE,AFT used on 001L		001
-010M	A225401231-624		. . WALL ASSY-SIDE,AFT used on 001M		001
-010N	A225491231-544		. . WALL ASSY-SIDE,AFT POST SB 25-1289 used on 001N		001
-010P	A225491231-530		. . WALL ASSY-SIDE,AFT POST SB 25-1289 used on 001P		001
013A	A225400231-202		. . . BRACKET BUY PN A225491004-002 used on 010A, 010B, 010C, 010D, 010E, 010F, 010G, 010H, 010J, 010K, 010L, 010M, 010N, 010P		002
017A	A225400231-214		. . . BRACKET BUY PN A225491004-232 used on 010A, 010B, 010C, 010D, 010E, 010F, 010G, 010H, 010J, 010K, 010L, 010M, 010N, 010P		001
020A	A225400232-208		. . . FITTING used on 010A, 010B, 010C, 010D, 010E, 010F, 010G, 010H, 010J, 010K, 010L, 010M, 010N, 010P		002

- ITEM NOT ILLUSTRATED

FIG. ITEM	PART NUMBER	AIRLINE STOCK NUMBER	NOMENCLATURE 1234567	EFF CODE	UNITS PER ASSY
030A	NAS1102E4-10		. . . SCREW used on 010A, 010B, 010C, 010D, 010E, 010F, 010G, 010H, 010J, 010K, 010L, 010M, 010N, 010P		004
-040A	NAS1833C08-370		. . . INSERT used on 010A, 010B, 010C, 010D, 010E, 010F, 010G, 010H, 010J, 010K, 010L, 010M, 010N, 010P		063
-045A	NSA5054-08		. . . INSERT used on 010M		001
-050A	NAS1835C08		. . . INSERT used on 010A, 010B, 010C, 010D, 010E, 010F, 010G, 010H, 010J, 010K, 010L, 010M, 010N, 010P		007
-060A	NAS1833C3-370		. . . INSERT used on 010A, 010B, 010C, 010D, 010E, 010F, 010G, 010H, 010J, 010K, 010L, 010M, 010N, 010P		029
-070A	NSA5054-5		. . . INSERT used on 010A, 010B, 010C, 010D, 010E, 010F, 010G, 010H, 010J, 010K, 010L, 010M, 010N, 010P		012
-080A	NSA5054-3		. . . INSERT used on 010A, 010B, 010C, 010D, 010E, 010F, 010G, 010H, 010J, 010K, 010L, 010M, 010N, 010P		001

- ITEM NOT ILLUSTRATED

FIG. ITEM	PART NUMBER	AIRLINE STOCK NUMBER	NOMENCLATURE 1234567	EFF CODE	UNITS PER ASSY
-090A	NSA5054-4		. . . INSERT used on 010A, 010B, 010C, 010D, 010E, 010F, 010G, 010H, 010J, 010K, 010L, 010M, 010N, 010P		008
-100A	NSA935405-01		. . . MOUNT used on 010A, 010B, 010C, 010D, 010E, 010F, 010G, 010H, 010J, 010K, 010L, 010M, 010N, 010P		010
110A	550MBB1		. . HANDLE ASSY used on 001A, 001B, 001D, 001G, 001H, 001J, 001M, 001N, 001P		001
-110B	550-33-300MBB		. . HANDLE ASSY used on 001C, 001E, 001F, 001K, 001L		001
120A	S7224		. . . SCREW-SPECIAL used on 110A, 110B		002
130A	8534		. . . PIN-SECURITY used on 110A, 110B		002
140A	8587		. . . WASHER-SPECIAL used on 110A, 110B		002
150A	A225401410-502		. . COVER-OXYGEN CONTAIN-ER ASSY used on 001A, 001C, 001D, 001E, 001F, 001J, 001L, 001M, 001N		001
-150B	A225401410-504		. . COVER-OXYGEN CONTAIN-ER ASSY used on 001B, 001P		001

- ITEM NOT ILLUSTRATED

FIG. ITEM	PART NUMBER	AIRLINE STOCK NUMBER	NOMENCLATURE 1234567	EFF CODE	UNITS PER ASSY
-150C	A225401410-508		. . COVER-OXYGEN CONTAIN-ER ASSY used on 001G		001
-150D	A225401410-500		. . COVER-OXYGEN CONTAIN-ER ASSY used on 001H		001
-150E	A225401410-510		. . COVER-OXYGEN CONTAIN-ER ASSY used on 001K		001
160A	A225400450-204		. . ANGLE used on 001A, 001B, 001C, 001D, 001E, 001F, 001G, 001H, 001J, 001K, 001L, 001M, 001N, 001P		001
170A	NAS1102-08-5		. . SCREW used on 001A, 001B, 001C, 001D, 001E, 001F, 001G, 001H, 001J, 001K, 001L, 001M, 001N, 001P		004
180A	NSA5067-08-1		. . NUT used on 001A, 001B, 001C, 001D, 001E, 001F, 001G, 001H, 001J, 001K, 001L, 001M, 001N, 001P		004
190A	A225400450-202		. . ANGLE used on 001A, 001B, 001C, 001D, 001E, 001F, 001G, 001H, 001J, 001K, 001L, 001M, 001N, 001P		002
200A	S2F212-85		. . CONTAINER ASSY-OXYGEN used on 001J		001

- ITEM NOT ILLUSTRATED

FIG. ITEM	PART NUMBER	AIRLINE STOCK NUMBER	NOMENCLATURE 1234567	EFF CODE	UNITS PER ASSY
-200B	G2F212-51		. . CONTAINER ASSY-OXYGEN POST SB 35-1020 used on 001B, 001P		001
-200C	G2F212-25		. . CONTAINER ASSY-OXYGEN POST SB 35-1020 used on 001C		001
-200D	G2F212-18		. . CONTAINER ASSY-OXYGEN POST SB 35-1020 used on 001G		001
-200E	22C150150080003		. . CONTAINER ASSY-OXYGEN used on 001H		001
-200F	G2F212-75		. . CONTAINER ASSY-OXYGEN PRE VSB A2-254-25-100 used on 001K		001
-200G	22C150150170003		. . CONTAINER ASSY-OXYGEN used on 001L		001
-200H	22C150150320001		. . CONTAINER ASSY-OXYGEN used on 001D		001
-200J	G2F212-85		. . CONTAINER ASSY-OXYGEN POST SB 35-1020 used on 001A, 001E, 001F, 001J, 001M, 001N		001
-200K	22G150150430400		. . CONTAINER ASSY-OXYGEN POST VSB A2-254-25-100 used on 001K		001
210A	NAS1096-2-5		. . SCREW PRE VSB A2-254-25-100 BUY PN NAS1801-08-5 used on 001A, 001B, 001C, 001D, 001E, 001F, 001G, 001H, 001J, 001K, 001L, 001M, 001N, 001P		012

- ITEM NOT ILLUSTRATED

FIG. ITEM	PART NUMBER	AIRLINE STOCK NUMBER	NOMENCLATURE 1234567	EFF CODE	UNITS PER ASSY
-210B	NAS1096-2-5		. . SCREW POST VSB A2-254-25-100 BUY PN NAS1801-08-5 used on 001K		008
-215A	NAS1801-08-6		. . SCREW POST VSB A2-254-25-100 used on 001K		004
220A	NAS1149CN832R		. . WASHER used on 001A, 001B, 001C, 001D, 001E, 001F, 001G, 001H, 001J, 001K, 001L, 001M, 001N, 001P		019
230A	A225400451-202		. . STUD used on 001A, 001B, 001C, 001D, 001E, 001F, 001G, 001H, 001J, 001K, 001L, 001M, 001N, 001P		002
240A	A225401222-514		. . POST ASSY used on 001A, 001N		001
-240B	A225401222-506		. . POST ASSY used on 001B, 001P		001
-240C	A225401222-502		. . POST ASSY used on 001C, 001L		001
-240D	A225401222-500		. . POST ASSY used on 001E, 001G, 001J, 001M		001
-240E	A225401222-524		. . POST ASSY used on 001F		001
-240F	A225401222-508		. . POST ASSY used on 001H		001
-240G	A225401222-530		. . POST ASSY used on 001K		001

- ITEM NOT ILLUSTRATED

FIG. ITEM	PART NUMBER	AIRLINE STOCK NUMBER	NOMENCLATURE 1234567	EFF CODE	UNITS PER ASSY
-240H	A225401222-526		. . POST ASSY used on 001D		001
243A	NAS514P832-4		. . . SCREW used on 240A, 240B, 240C, 240D, 240E, 240F, 240G,240H		004
245A	NAS1068A08		. . . NUT BUY PN MS21075L08 used on 240A, 240B, 240C, 240D, 240E, 240F, 240G,240H		004
250A	NAS1096-2-7		. . SCREW BUY PN NAS1801-08-7 used on 001A, 001B, 001C, 001D, 001E, 001F, 001G, 001H, 001J, 001K, 001L, 001M, 001N, 001P		005
260A	2634DP437-110		. . CAP used on 001A, 001B, 001C, 001D, 001E, 001F, 001G, 001H, 001J, 001K, 001L, 001M, 001N, 001P		005
270A	NAS1096-3-9		. . SCREW BUY PN NAS1801-3-9 used on 001A, 001B, 001C, 001D, 001E, 001F, 001G, 001H, 001J, 001K, 001L, 001M, 001N, 001P		001
280A	A2547577004800		. . DISPENSER-TOILET SEAT COVER used on 001A, 001D, 001F, 001L, 001M, 001N A254-75770-048-00		001

- ITEM NOT ILLUSTRATED

FIG. ITEM	PART NUMBER	AIRLINE STOCK NUMBER	NOMENCLATURE 1234567	EFF CODE	UNITS PER ASSY
290A	NAS1100-08-4		. . SCREW used on 001A, 001D, 001F, 001L, 001M, 001N		002
300A	AR197-3		. . HOOK-COAT used on 001M		001
310A	NAS514P832-7		. . SCREW used on 001M		001
-330A	NAS1833C08-370		. . INSERT POST SB 25-1214 used on 001C		002
340A	550-33-300MBB		. . HANDLE ASSY POST SB 25-1214 used on 001K		001
350A	S7224		. . . SCREW-SPECIAL used on 340A		002
360A	8534		. . . PIN-SECURITY used on 340A		002
370A	8587		. . . WASHER-SPECIAL used on 340A		002
-380A	3550012		. . RIVET POST SB 25-1214 used on 001C		006
420A	A225401236-200		. . ANGLE POST SB 25-1289 used on 001N, 001P		001
430A	NAS1149C0332R		. . WASHER used on 001N, 001P		009
440A	NAS1096-3-7		. . SCREW BUY PN NAS1801-3-7 used on 001N, 001P		004

- ITEM NOT ILLUSTRATED

FIG. ITEM	PART NUMBER	AIRLINE STOCK NUMBER	NOMENCLATURE 1234567	EFF CODE	UNITS PER ASSY
-450A	NAS1833C08-370		. . INSERT used on 001N, 001P		005
460A	NAS1096-3-5		. . SCREW BUY PN NAS1801-3-5 used on 001N, 001P		005

- ITEM NOT ILLUSTRATED

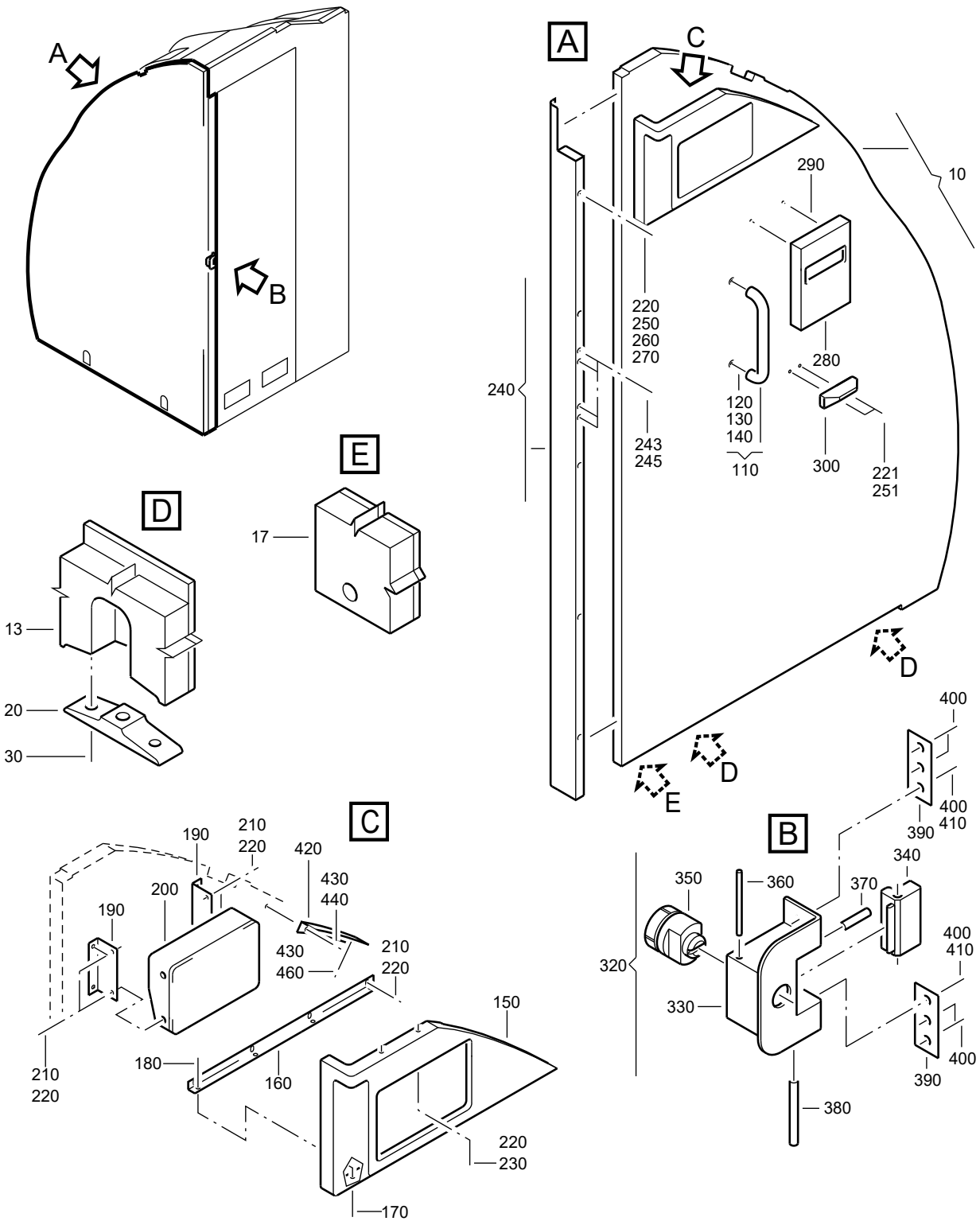

F_PL_254151_06_G_01_01

WALL-SIDE
Figure 06G/EN254151SHEET06G01

FIG. ITEM	PART NUMBER	AIRLINE STOCK NUMBER	NOMENCLATURE 1234567		EFF CODE	UNITS PER ASSY
06G						
-001A	D2549010509865		. WALL-SIDE used on 040F (25415141B) SEE 25-41-51-41B FOR NHA	NP		RF
-001B	D2549020604465		. WALL-SIDE used on 040H (25415101K) SEE 25-41-51-01K FOR NHA	NP		RF
-001C	D2549010510065		. WALL-SIDE used on 040D (25415101K) SEE 25-41-51-01K FOR NHA	NP		RF
-001D	D2549030505865		. WALL-SIDE used on 040M (25415101J) SEE 25-41-51-01J FOR NHA	NP		RF
-001E	D2549030506865		. WALL-SIDE used on 040N (25415101J), 040G (25415101P) SEE 25-41-51-01J FOR NHA SEE 25-41-51-01P FOR NHA	NP		RF
-001F	D2549020608665		. WALL-SIDE used on 040H (25415101M) SEE 25-41-51-01M FOR NHA	NP		RF
-001G	D2549020607665		. WALL-SIDE used on 040D (25415101M) SEE 25-41-51-01M FOR NHA	NP		RF
-001H	D2549020609065		. WALL-SIDE used on 040D (25415101L) SEE 25-41-51-01L FOR NHA	NP		RF
-001J	D2549030506265		. WALL-SIDE used on 040E (25415101L) SEE 25-41-51-01L FOR NHA	NP		RF

- ITEM NOT ILLUSTRATED

FIG. ITEM	PART NUMBER	AIRLINE STOCK NUMBER	NOMENCLATURE 1234567	EFF CODE	UNITS PER ASSY
-001K	D2549020605865		. WALL-SIDE NP used on 040F (25415101L) SEE 25-41-51-01L FOR NHA		RF
-001L	D2549010512065		. WALL-SIDE NP used on 040D (25415141B) SEE 25-41-51-41B FOR NHA		RF
-001M	D2549030507065		. WALL-SIDE NP PRE VSB A2-254-25-080 used on 040G (25415101M) SEE 25-41-51-01M FOR NHA		RF
-001N	D2549020606865		. WALL-SIDE NP used on 040E (25415101M) SEE 25-41-51-01M FOR NHA		RF
-001P	D2549020606865		. WALL-SIDE NP used on 040M (25415101M) SEE 25-41-51-01M FOR NHA		RF
-001Q	R22540117200265		. WALL-SIDE NP POST VSB A2-254-25-080 used on 040N (25415101M) SEE 25-41-51-01M FOR NHA		RF
010A	A225401231-614		. . WALL ASSY-SIDE,AFT used on 001A		001
-010B	A225401231-576		. . WALL ASSY-SIDE,AFT used on 001B, 001F		001
-010C	A225401231-522		. . WALL ASSY-SIDE,AFT used on 001C		001
-010D	A225401231-626		. . WALL ASSY-SIDE,AFT used on 001D, 001E		001
-010E	A225401231-646		. . WALL ASSY-SIDE,AFT used on 001M, 001Q		001

- ITEM NOT ILLUSTRATED

FIG. ITEM	PART NUMBER	AIRLINE STOCK NUMBER	NOMENCLATURE 1234567	EFF CODE	UNITS PER ASSY
-010F	A225401231-628		. . WALL ASSY-SIDE,AFT used on 001G, 001H, 001N		001
-010G	A225401231-636		. . WALL ASSY-SIDE,AFT used on 001J		001
-010H	A225401231-634		. . WALL ASSY-SIDE,AFT used on 001K		001
-010J	A225401231-644		. . WALL ASSY-SIDE,AFT used on 001L		001
-010K	A225491231-590		. . WALL ASSY-SIDE,AFT used on 001P		001
013A	A225400231-202		. . . BRACKET BUY PN A225491004-002 used on 010A, 010B, 010C, 010D, 010E, 010F, 010G, 010H, 010J, 010K		002
017A	A225400231-214		. . . BRACKET BUY PN A225491004-232 used on 010A, 010B, 010C, 010D, 010E, 010F, 010G, 010H, 010J, 010K		001
020A	A225400232-208		. . . FITTING used on 010A, 010B, 010C, 010D, 010E, 010F, 010G, 010H, 010J, 010K		002
030A	NAS1102E4-10		. . . SCREW used on 010A, 010B, 010C, 010D, 010E, 010F, 010G, 010H, 010J, 010K		004

- ITEM NOT ILLUSTRATED

FIG. ITEM	PART NUMBER	AIRLINE STOCK NUMBER	NOMENCLATURE 1234567	EFF CODE	UNITS PER ASSY
-040A	NAS1833C08-370		. . . INSERT used on 010A, 010B, 010C, 010D, 010E, 010F, 010G, 010H, 010J, 010K		051
-050A	NAS1835C08		. . . INSERT used on 010A, 010B, 010C, 010D, 010E, 010F, 010G, 010H, 010J, 010K		007
-060A	NAS1833C3-370		. . . INSERT used on 010A, 010B, 010C, 010D, 010E, 010F, 010G, 010H, 010J, 010K		029
-070A	NSA5054-5		. . . INSERT used on 010A, 010B, 010C, 010D, 010E, 010F, 010G, 010H, 010J, 010K		012
-080A	NSA5054-3		. . . INSERT used on 010A, 010B, 010C, 010D, 010E, 010F, 010G, 010H, 010J, 010K		001
-090A	NSA5054-4		. . . INSERT used on 010A, 010B, 010C, 010D, 010E, 010F, 010G, 010H, 010J, 010K		008
-100A	NSA935405-01		. . . MOUNT used on 010A, 010B, 010C, 010D, 010E, 010F, 010G, 010H, 010J, 010K		010
110A	550MBB1		. . HANDLE ASSY used on 001A, 001C, 001D, 001E, 001F, 001J, 001L		001

- ITEM NOT ILLUSTRATED

FIG. ITEM	PART NUMBER	AIRLINE STOCK NUMBER	NOMENCLATURE 1234567	EFF CODE	UNITS PER ASSY
-110B	550-33-300MBB		. . HANDLE ASSY used on 001B, 001G, 001H, 001K, 001M, 001N, 001P, 001Q		001
120A	S7224		. . . SCREW-SPECIAL used on 110A, 110B		002
130A	8534		. . . PIN-SECURITY used on 110A, 110B		002
140A	8587		. . . WASHER-SPECIAL used on 110A, 110B		002
150A	A225401410-502		. . COVER-OXYGEN CONTAIN-ER ASSY used on 001A, 001B, 001D, 001E, 001F, 001G, 001H, 001J, 001K, 001L, 001M, 001N, 001P, 001Q		001
-150B	A225401410-500		. . COVER-OXYGEN CONTAIN-ER ASSY used on 001C		001
160A	A225400450-204		. . ANGLE used on 001A, 001B, 001C, 001D, 001E, 001F, 001G, 001H, 001J, 001K, 001L, 001M, 001N, 001P, 001Q		001
170A	NAS1102-08-5		. . SCREW used on 001A, 001B, 001C, 001D, 001E, 001F, 001G, 001H, 001J, 001K, 001L, 001M, 001N, 001P, 001Q		004
180A	NSA5067-08-1		. . NUT used on 001A, 001B, 001C, 001D, 001E, 001F, 001G, 001H, 001J, 001K, 001L, 001M, 001N, 001P, 001Q		004

- ITEM NOT ILLUSTRATED

FIG. ITEM	PART NUMBER	AIRLINE STOCK NUMBER	NOMENCLATURE 1234567	EFF CODE	UNITS PER ASSY
190A	A225400450-202		. . ANGLE used on 001A, 001B, 001C, 001D, 001E, 001F, 001G, 001H, 001J, 001K, 001L, 001M, 001N, 001P, 001Q		002
200A	22C150150320003		. . CONTAINER ASSY-OXYGEN PRE VSB A2-254-25-080 used on 001A, 001K, 001L, 001M		001
-200B	S2F212-85		. . CONTAINER ASSY-OXYGEN used on 001G		001
-200C	22C150150080003		. . CONTAINER ASSY-OXYGEN used on 001C		001
-200D	G2F212-85		. . CONTAINER ASSY-OXYGEN POST SB 35-1020 used on 001B, 001D, 001E, 001F, 001G, 001H, 001J, 001N, 001P		001
-200E	22G150150320400		. . CONTAINER ASSY-OXYGEN POST VSB A2-254-25-080 used on 001Q		001
210A	NAS1096-2-5		. . SCREW PRE VSB A2-254-25-080 BUY PN NAS1801-08-5 used on 001A, 001B, 001C, 001D, 001E, 001F, 001G, 001H, 001J, 001K, 001L, 001M, 001N, 001P		012
-210B	NAS1096-2-5		. . SCREW POST VSB A2-254-25-080 BUY PN NAS1801-08-5 used on 001Q		008
-212A	NAS1801-08-6		. . SCREW POST VSB A2-254-25-080 used on 001Q		004

- ITEM NOT ILLUSTRATED

FIG. ITEM	PART NUMBER	AIRLINE STOCK NUMBER	NOMENCLATURE 1234567	EFF CODE	UNITS PER ASSY
220A	NAS1149CN832R		. . WASHER used on 001A, 001B, 001C, 001D, 001E, 001F, 001G, 001H, 001J, 001K, 001L, 001M, 001N, 001P, 001Q		019
221A	NAS1149CN832R		. . WASHER POST SB 25-1214 used on 001A, 001F, 001L		002
230A	A225400451-202		. . STUD used on 001A, 001B, 001C, 001D, 001E, 001F, 001G, 001H, 001J, 001K, 001L, 001M, 001N, 001P, 001Q		002
240A	A225401222-502		. . POST ASSY used on 001A, 001D, 001E, 001L		001
-240B	A225401222-500		. . POST ASSY used on 001B, 001F, 001G, 001H, 001K, 001M, 001N, 001P, 001Q		001
-240C	A225401222-508		. . POST ASSY used on 001C		001
-240D	A225401222-532		. . POST ASSY used on 001J		001
243A	NAS514P832-4		. . . SCREW used on 240A, 240B, 240C, 240D		004
245A	NAS1068A08		. . . NUT BUY PN MS21075L08 used on 240A, 240B, 240C, 240D		004

- ITEM NOT ILLUSTRATED

FIG. ITEM	PART NUMBER	AIRLINE STOCK NUMBER	NOMENCLATURE 1234567	EFF CODE	UNITS PER ASSY
250A	NAS1096-2-7		. . SCREW BUY PN NAS1801-08-7 used on 001A, 001B, 001C, 001D, 001E, 001F, 001G, 001H, 001J, 001K, 001L, 001M, 001N, 001P, 001Q		005
251A	NAS1096-2-7		. . SCREW POST SB 25-1214 BUY PN NAS1801-08-7 used on 001A, 001L		002
260A	2634DP437-110		. . CAP used on 001A, 001B, 001C, 001D, 001E, 001F, 001G, 001H, 001J, 001K, 001L, 001M, 001N, 001P, 001Q		004
270A	NAS1096-3-9		. . SCREW BUY PN NAS1801-3-9 used on 001A, 001B, 001C, 001D, 001E, 001F, 001G, 001H, 001J, 001K, 001L, 001M, 001N, 001P, 001Q		001
280A	A2547577004800		. . DISPENSER-TOILET SEAT COVER used on 001B, 001D, 001E, 001F, 001K, 001M, 001Q A254-75770-048-00		001
290A	NAS1100-08-4		. . SCREW used on 001B, 001D, 001E, 001F, 001K, 001M, 001Q		002
-300A	A2547380206000		. . SUPPORT POST SB 25-1214 used on 001A, 001L		001

- ITEM NOT ILLUSTRATED

FIG. ITEM	PART NUMBER	AIRLINE STOCK NUMBER	NOMENCLATURE 1234567	EFF CODE	UNITS PER ASSY
-310A	NAS1833C08-370		. . INSERT POST SB 25-1214 used on 001A, 001L		002
320A	A225400208-000		. . DEVICE ASSY-EMERGENCY UNLOCKING,SINGLE DOOR POST SB 25-1316 used on 001N, 001P		001
330A	A225400208-200		. . . HOUSING-EMERGENCY UN-LOCKING DEVICE used on 320A		001
340A	A225400208-204		. . . STRIKE-EMERGENCY UN-LOCKING DEVICE used on 320A		001
350A	A225400208-202		. . . PIVOT-EMERGENCY UN-LOCKING DEVICE used on 320A		001
360A	A225400208-210		. . . PIN used on 320A		001
370A	SM1275-1KNM04		. . . CATCH-SNAP used on 320A		001
380A	A225400208-208		. . . BOLT used on 320A		001
390A	A225400221-202		. . PLATE POST SB 25-1316 used on 001N, 001P		002
400A	NAS514P832-7		. . SCREW POST SB 25-1316 used on 001N, 001P		006
410A	NSA5067-08-1		. . NUT POST SB 25-1316 used on 001N, 001P		002

- ITEM NOT ILLUSTRATED

FIG. ITEM	PART NUMBER	AIRLINE STOCK NUMBER	NOMENCLATURE 1234567	EFF CODE	UNITS PER ASSY
420A	A225401236-200		. . ANGLE POST SB 25-1289 used on 001P		001
430A	NAS1149C0332R		. . WASHER used on 001P		009
440A	NAS1096-3-7		. . SCREW BUY PN NAS1801-3-7 used on 001P		004
-450A	NAS1833C08-370		. . INSERT used on 001P		005
460A	NAS1096-3-5		. . SCREW BUY PN NAS1801-3-5 used on 001P		005

- ITEM NOT ILLUSTRATED

THIS PAGE IS INTENTIONALLY LEFT BLANK

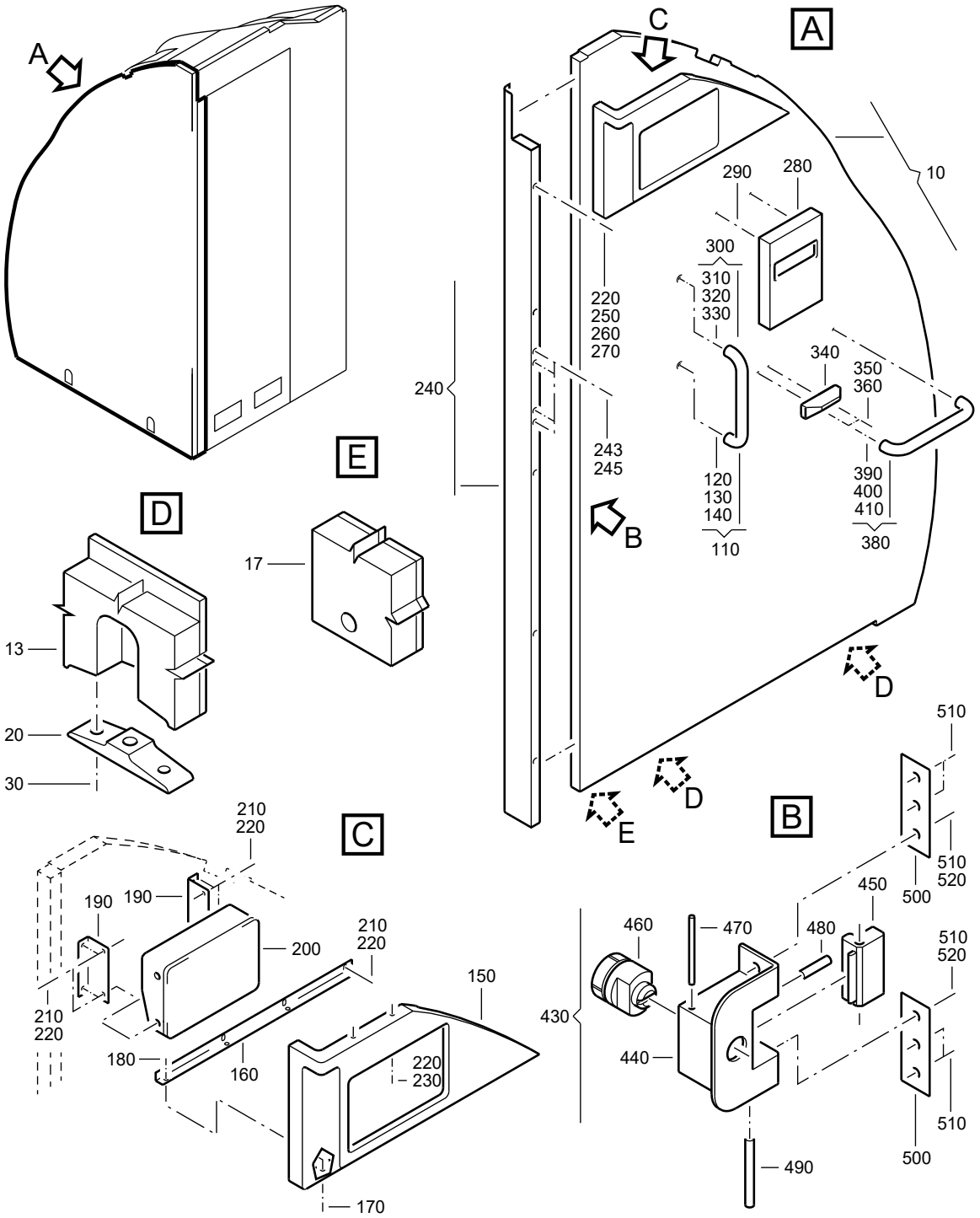

F_PL_254151_06_H_01_00

WALL-SIDE
Figure 06H/EN254151SHEET06H01

FIG. ITEM	PART NUMBER	AIRLINE STOCK NUMBER	NOMENCLATURE 1234567		EFF CODE	UNITS PER ASSY
06H						
-001A	D2549020606065		. WALL-SIDE used on 040H (25415101L) SEE 25-41-51-01L FOR NHA	NP		RF
-001B	D2549020611865		. WALL-SIDE used on 040K (25415101P) SEE 25-41-51-01P FOR NHA	NP		RF
-001C	D2549020611265		. WALL-SIDE used on 040C (25415101L) SEE 25-41-51-01L FOR NHA	NP		RF
-001D	D2549010513465		. WALL-SIDE used on 040G (25415101L) SEE 25-41-51-01L FOR NHA	NP		RF
-001E	D2549020605065		. WALL-SIDE used on 040A (25415101M) SEE 25-41-51-01M FOR NHA	NP		RF
-001F	D2549020608465		. WALL-SIDE used on 040B (25415101M) SEE 25-41-51-01M FOR NHA	NP		RF
-001G	D2549020607465		. WALL-SIDE used on 040C (25415101M) SEE 25-41-51-01M FOR NHA	NP		RF
-001H	D2549010511665		. WALL-SIDE used on 040F (25415101M) SEE 25-41-51-01M FOR NHA	NP		RF
-001J	D2549010513665		. WALL-SIDE used on 040E (25415141B) SEE 25-41-51-41B FOR NHA	NP		RF
-001K	D2549020610065		. WALL-SIDE used on 040J (25415101M) SEE 25-41-51-01M FOR NHA	NP		RF

- ITEM NOT ILLUSTRATED

FIG. ITEM	PART NUMBER	AIRLINE STOCK NUMBER	NOMENCLATURE 1234567	EFF CODE	UNITS PER ASSY
-001L	D2549020608265		. WALL-SIDE NP used on 040C (25415101G), 040G (25415101K), 040K (25415101M) SEE 25-41-51-01G FOR NHA SEE 25-41-51-01K FOR NHA SEE 25-41-51-01M FOR NHA		RF
-001M	D2549030510665		. WALL-SIDE NP used on 040F (25415101T) SEE 25-41-51-01T FOR NHA		RF
-001N	D2549020702065		. WALL-SIDE NP used on 040L (25415101U), 040B (25415141F) SEE 25-41-51-01U FOR NHA SEE 25-41-51-41F FOR NHA		RF
010A	A225401231-630		. . WALL ASSY-SIDE,AFT used on 001H		001
-010B	A225401231-574		. . WALL ASSY-SIDE,AFT used on 001C		001
-010C	A225401231-624		. . WALL ASSY-SIDE,AFT used on 001D		001
-010D	A225401231-638		. . WALL ASSY-SIDE,AFT used on 001E, 001F		001
-010E	A225401231-640		. . WALL ASSY-SIDE,AFT used on 001G		001
-010F	A225401231-650		. . WALL ASSY-SIDE,AFT used on 001J		001
-010G	A225401231-648		. . WALL ASSY-SIDE,AFT used on 001K		001
-010H	A225401231-598		. . WALL ASSY-SIDE,AFT used on 001L		001

- ITEM NOT ILLUSTRATED

FIG. ITEM	PART NUMBER	AIRLINE STOCK NUMBER	NOMENCLATURE 1234567	EFF CODE	UNITS PER ASSY
-010J	A2254012318630		. . WALL ASSY-SIDE,AFT POST SB 25-1314 used on 001A		001
-010K	A225401231-632		. . WALL ASSY-SIDE,AFT used on 001B		001
-010L	A225401233-520		. . WALL ASSY-SIDE,AFT used on 001M		001
-010M	A225401233-508		. . WALL ASSY-SIDE,AFT used on 001N		001
013A	A225400231-202		. . . BRACKET BUY PN A225491004-002 used on 010A, 010B, 010C, 010D, 010E, 010F, 010G, 010H, 010J, 010K, 010L, 010M		002
017A	A225400231-214		. . . BRACKET BUY PN A225491004-232 used on 010A, 010B, 010C, 010D, 010E, 010F, 010G, 010H, 010J, 010K, 010L, 010M		001
020A	A225400232-208		. . . FITTING used on 010A, 010B, 010C, 010D, 010E, 010F, 010G, 010H, 010J, 010K, 010L, 010M		002
030A	NAS1102E4-10		. . . SCREW used on 010A, 010B, 010C, 010D, 010E, 010F, 010G, 010H, 010J, 010K, 010L, 010M		004
-040A	NAS1833C08-370		. . . INSERT used on 010A, 010B, 010C, 010D, 010E, 010F, 010G, 010H, 010J, 010K, 010L, 010M		051

- ITEM NOT ILLUSTRATED

FIG. ITEM	PART NUMBER	AIRLINE STOCK NUMBER	NOMENCLATURE 1234567	EFF CODE	UNITS PER ASSY
-045A	NSA5054-08		. . . INSERT used on 010C, 010E, 010F, 010G, 010H, 010J		001
-050A	NAS1835C08		. . . INSERT used on 010A, 010B, 010C, 010D, 010E, 010F, 010G, 010H, 010J, 010K, 010L, 010M		007
-060A	NAS1833C3-370		. . . INSERT used on 010A, 010B, 010C, 010D, 010E, 010F, 010G, 010H, 010J, 010K, 010L, 010M		029
-070A	NSA5054-5		. . . INSERT used on 010A, 010B, 010C, 010D, 010E, 010F, 010G, 010H, 010J, 010K, 010L, 010M		012
-080A	NSA5054-3		. . . INSERT used on 010A, 010B, 010C, 010D, 010E, 010F, 010G, 010H, 010J, 010K, 010L, 010M		001
-090A	NSA5054-4		. . . INSERT used on 010A, 010B, 010C, 010D, 010E, 010F, 010G, 010H, 010J, 010K, 010L, 010M		008
-100A	NSA935405-01		. . . MOUNT used on 010A, 010B, 010C, 010D, 010E, 010F, 010G, 010H, 010J, 010K, 010L, 010M		010
110A	550-33-300MBB		. . HANDLE ASSY used on 001A, 001B, 001C, 001E, 001F, 001H, 001J		001
120A	S7224		. . . SCREW-SPECIAL used on 110A		002

- ITEM NOT ILLUSTRATED

FIG. ITEM	PART NUMBER	AIRLINE STOCK NUMBER	NOMENCLATURE 1234567	EFF CODE	UNITS PER ASSY
130A	8534		. . . PIN-SECURITY used on 110A		002
140A	8587		. . . WASHER-SPECIAL used on 110A		002
150A	A225401410-502		. . COVER-OXYGEN CONTAIN-ER ASSY used on 001A, 001B, 001C, 001D, 001E, 001F, 001G, 001H, 001J, 001K, 001M		001
-150B	A225401410-504		. . COVER-OXYGEN CONTAIN-ER ASSY used on 001L		001
-150C	A225401410-512		. . COVER-OXYGEN CONTAIN-ER ASSY used on 001N		001
160A	A225400450-204		. . ANGLE used on 001A, 001B, 001C, 001D, 001E, 001F, 001G, 001H, 001J, 001K, 001L, 001M, 001N		001
170A	NAS1102-08-5		. . SCREW used on 001A, 001B, 001C, 001D, 001E, 001F, 001G, 001H, 001J, 001K, 001L, 001M, 001N		004
180A	NSA5067-08-1		. . NUT used on 001A, 001B, 001C, 001D, 001E, 001F, 001G, 001H, 001J, 001K, 001L, 001M, 001N		004
190A	A225400450-202		. . ANGLE used on 001A, 001B, 001C, 001D, 001E, 001F, 001G, 001H, 001J, 001K, 001L, 001M, 001N		002

- ITEM NOT ILLUSTRATED

FIG. ITEM	PART NUMBER	AIRLINE STOCK NUMBER	NOMENCLATURE 1234567	EFF CODE	UNITS PER ASSY
200A	G2F212-85		. . CONTAINER ASSY-OXYGEN POST SB 35-1020 used on 001A, 001B, 001D, 001E, 001F, 001G, 001K, 001M		001
-200B	22C220150320003		. . CONTAINER ASSY-OXYGEN used on 001C		001
-200C	22C150150320003		. . CONTAINER ASSY-OXYGEN used on 001H, 001J		001
-200D	G2F212-51		. . CONTAINER ASSY-OXYGEN PRE VSB A2-254-25-046 used on 001L		001
-200E	22C150150030004		. . CONTAINER ASSY-OXYGEN used on 001N		001
-200F	22G150150460400		. . CONTAINER ASSY-OXYGEN POST VSB A2-254-25-046 used on 001L		001
-200G	22G150150320400		. . CONTAINER ASSY-OXYGEN POST VSB A2-254-25-057 used on 001E		001
210A	NAS1096-2-5		. . SCREW PRE VSB A2-254-25-046 PRE VSB A2-254-25-057 BUY PN NAS1801-08-5 used on 001A, 001B, 001C, 001D, 001E, 001F, 001G, 001H, 001J, 001K, 001L, 001M, 001N		008
-210B	NAS1096-2-5		. . SCREW POST VSB A2-254-25-046 POST VSB A2-254-25-057 BUY PN NAS1801-08-5 used on 001E, 001L		004

- ITEM NOT ILLUSTRATED

FIG. ITEM	PART NUMBER	AIRLINE STOCK NUMBER	NOMENCLATURE 1234567	EFF CODE	UNITS PER ASSY
-215A	NAS1801-08-6		. . SCREW POST VSB A2-254-25-046 POST VSB A2-254-25-057 used on 001E, 001L		004
220A	NAS1149CN832R		. . WASHER used on 001A, 001B, 001C, 001D, 001E, 001F, 001G, 001H, 001J, 001K, 001L, 001M, 001N		013
230A	A225400451-202		. . STUD used on 001A, 001B, 001C, 001D, 001E, 001F, 001G, 001H, 001J, 001K, 001L, 001M, 001N		002
240A	A225401222-500		. . POST ASSY used on 001A, 001B, 001D, 001H, 001J		001
-240B	A225401222-502		. . POST ASSY used on 001C, 001K		001
-240C	A225401222-522		. . POST ASSY used on 001E, 001F		001
-240D	A225401222-532		. . POST ASSY used on 001G		001
-240E	A225401222-528		. . POST ASSY used on 001L		001
-240F	SPACERETAINER		. . SPACE-RETAINER POST SB 25-1316 used on 001M, 001N		001
243A	NAS514P832-4		. . . SCREW used on 240A, 240B, 240C, 240D, 240E, 240F		004

- ITEM NOT ILLUSTRATED

FIG. ITEM	PART NUMBER	AIRLINE STOCK NUMBER	NOMENCLATURE 1234567	EFF CODE	UNITS PER ASSY
245A	NAS1068A08		. . . NUT BUY PN MS21075L08 used on 240A, 240B, 240C, 240D, 240E, 240F		004
250A	NAS1096-2-7		. . SCREW BUY PN NAS1801-08-7 used on 001A, 001B, 001C, 001D, 001E, 001F, 001G, 001H, 001J, 001K, 001L, 001M, 001N		005
260A	2634DP437-110		. . CAP used on 001A, 001B, 001C, 001D, 001E, 001F, 001G, 001H, 001J, 001K, 001L, 001M, 001N		004
270A	NAS1096-3-9		. . SCREW BUY PN NAS1801-3-9 used on 001A, 001B, 001C, 001D, 001E, 001F, 001G, 001H, 001J, 001K, 001L, 001M, 001N		001
280A	A2547577004800		. . DISPENSER-TOILET SEAT COVER used on 001A, 001B, 001C, 001D, 001H, 001J A254-75770-048-00		001
-280B	A2547577007000		. . DISPENSER-TOILET SEAT COVER used on 001L		001
-280C	A2547577007600		. . DISPENSER-TOILET SEAT COVER used on 001N		001
290A	NAS1100-08-4		. . SCREW POST SB 25-1214 used on 001A, 001B, 001C, 001D, 001H, 001J, 001L, 001N		002

- ITEM NOT ILLUSTRATED

FIG. ITEM	PART NUMBER	AIRLINE STOCK NUMBER	NOMENCLATURE 1234567	EFF CODE	UNITS PER ASSY
300A	550MBB1		. . HANDLE ASSY used on 001D, 001G, 001K, 001L, 001M, 001N		001
310A	S7224		. . . SCREW-SPECIAL used on 300A		002
320A	8534		. . . PIN-SECURITY used on 300A		002
330A	8587		. . . WASHER-SPECIAL used on 300A		002
340A	A2547380206000		. . SUPPORT POST SB 25-1214 used on 001K, 001M		001
-340B	A2547380208400		. . SUPPORT POST SB 25-1214 used on 001L		001
-340C	A2547380208800		. . SUPPORT used on 001N		001
350A	NAS1096-2-7		. . SCREW POST SB 25-1214 BUY PN NAS1801-08-7 used on 001K, 001L		002
360A	NAS1149CN832R		. . WASHER POST SB 25-1214 used on 001K, 001L		002
-370A	NAS1833C08-370		. . INSERT POST SB 25-1214 used on 001E, 001F, 001K, 001L		002
380A	550-33-300MBB		. . HANDLE ASSY POST SB 25-1214 used on 001E, 001F, 001J		001

- ITEM NOT ILLUSTRATED

FIG. ITEM	PART NUMBER	AIRLINE STOCK NUMBER	NOMENCLATURE 1234567	EFF CODE	UNITS PER ASSY
390A	S7224		. . . SCREW-SPECIAL used on 380A		002
400A	8534		. . . PIN-SECURITY used on 380A		002
410A	8587		. . . WASHER-SPECIAL used on 380A		002
-420A	3550012		. . RIVET POST SB 25-1214 used on 001E, 001F		006
430A	A225400208-000		. . DEVICE ASSY-EMERGENCY UNLOCKING,SINGLE DOOR POST SB 25-1316 used on 001A, 001M, 001N		001
440A	A225400208-200		. . . HOUSING-EMERGENCY UN-LOCKING DEVICE used on 430A		001
450A	A225400208-204		. . . STRIKE-EMERGENCY UN-LOCKING DEVICE used on 430A		001
460A	A225400208-202		. . . PIVOT-EMERGENCY UN-LOCKING DEVICE used on 430A		001
470A	A225400208-210		. . . PIN used on 430A		001
480A	SM1275-1KNM04		. . . CATCH-SNAP used on 430A		001
490A	A225400208-208		. . . BOLT used on 430A		001

- ITEM NOT ILLUSTRATED

FIG. ITEM	PART NUMBER	AIRLINE STOCK NUMBER	NOMENCLATURE 1234567	EFF CODE	UNITS PER ASSY
500A	A225400221-202		. . PLATE POST SB 25-1316 used on 001A, 001M, 001N		002
510A	NAS514P832-7		. . SCREW POST SB 25-1316 used on 001A, 001M, 001N		006
520A	NSA5067-08-1		. . NUT POST SB 25-1316 used on 001A, 001M, 001N		002

- ITEM NOT ILLUSTRATED

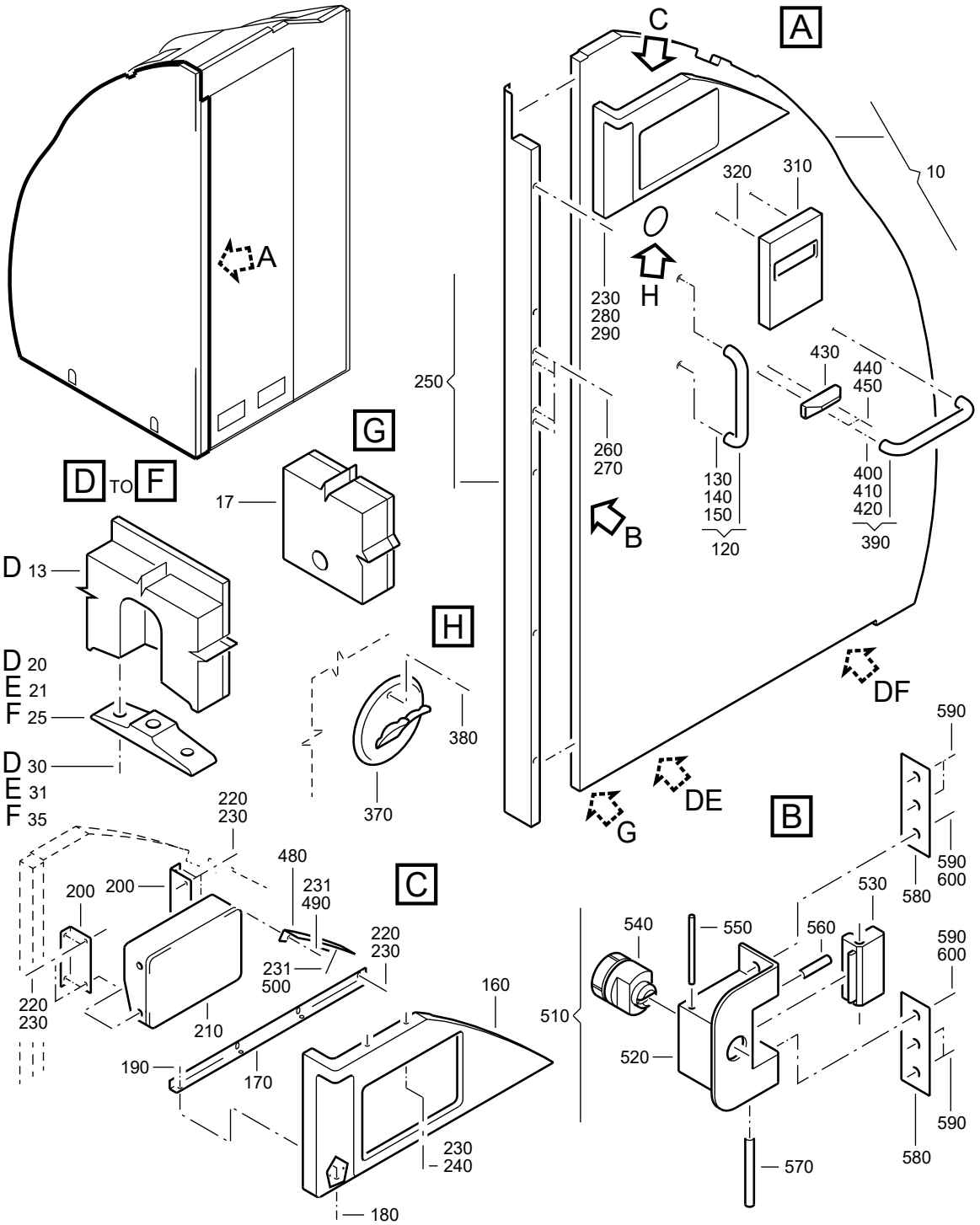

F_PL_254151_06_J_01_00

WALL-SIDE
Figure 06J/EN254151SHEET06J01

FIG. ITEM	PART NUMBER	AIRLINE STOCK NUMBER	NOMENCLATURE 1234567	EFF CODE	UNITS PER ASSY
06J					
-001A	D2549020607865		. WALL-SIDE NP used on 040B (25415101N) SEE 25-41-51-01N FOR NHA		RF
-001B	D2549030506465		. WALL-SIDE NP used on 040C (25415101N) SEE 25-41-51-01N FOR NHA		RF
-001C	D2549010511865		. WALL-SIDE NP used on 040D (25415101N) SEE 25-41-51-01N FOR NHA		RF
-001D	D2549020611065		. WALL-SIDE NP used on 040E (25415101N), 040F (25415101P) SEE 25-41-51-01N FOR NHA SEE 25-41-51-01P FOR NHA		RF
-001E	D2549020611665		. WALL-SIDE NP used on 040L (254151410) SEE 25-41-51-410 FOR NHA		RF
-001F	D2549020609865		. WALL-SIDE NP used on 040G (25415101N) SEE 25-41-51-01N FOR NHA		RF
-001G	D2549020610265		. WALL-SIDE NP used on 040H (25415101N) SEE 25-41-51-01N FOR NHA		RF
-001H	D2549010513865		. WALL-SIDE NP PRE VSB A2-254-25-037 used on 040A (25415141B) SEE 25-41-51-41B FOR NHA		RF
-001J	D2549030507265		. WALL-SIDE NP used on 040J (25415101N) SEE 25-41-51-01N FOR NHA		RF

- ITEM NOT ILLUSTRATED

FIG. ITEM	PART NUMBER	AIRLINE STOCK NUMBER	NOMENCLATURE 1234567		EFF CODE	UNITS PER ASSY
-001K	D2549010513065		. WALL-SIDE used on 040K (25415101N) SEE 25-41-51-01N FOR NHA	NP		RF
-001L	D2549030506665		. WALL-SIDE used on 040A (25415101P) SEE 25-41-51-01P FOR NHA	NP		RF
-001M	D2549020506465		. WALL-SIDE used on 040B (25415101P) SEE 25-41-51-01P FOR NHA	NP		RF
-001N	D2549020611465		. WALL-SIDE used on 040H (25415101P) SEE 25-41-51-01P FOR NHA	NP		RF
-001P	R22540117500065		. WALL-SIDE POST VSB A2-254-25-037 used on 040M (25415141B) SEE 25-41-51-41B FOR NHA	NP		RF
010A	A225401231-582		. . WALL ASSY-SIDE,AFT used on 001A			001
-010B	A225401231-580		. . WALL ASSY-SIDE,AFT used on 001B			001
-010C	A225401231-642		. . WALL ASSY-SIDE,AFT used on 001C			001
-010D	A225401231-608		. . WALL ASSY-SIDE,AFT used on 001D			001
-010E	A225491231-578		. . WALL ASSY-SIDE,AFT POST SB 25-1289 used on 001E			001
-010F	A225401231-660		. . WALL ASSY-SIDE,AFT used on 001F			001

- ITEM NOT ILLUSTRATED

FIG. ITEM	PART NUMBER	AIRLINE STOCK NUMBER	NOMENCLATURE 1234567	EFF CODE	UNITS PER ASSY
-010G	A225401231-664		. . WALL ASSY-SIDE,AFT used on 001G		001
-010H	A225401231-620		. . WALL ASSY-SIDE,AFT PRE VSB A2-254-25-037 used on 001H		001
-010J	A225401231-662		. . WALL ASSY-SIDE,AFT used on 001J		001
-010K	A225401231-594		. . WALL ASSY-SIDE,AFT used on 001K		001
-010L	A225401231-562		. . WALL ASSY-SIDE,AFT used on 001L		001
-010M	A225401231-504		. . WALL ASSY-SIDE,AFT used on 001M		001
-010N	A225401231-618		. . WALL ASSY-SIDE,AFT used on 001N		001
-010P	A225401231-676		. . WALL ASSY-SIDE,AFT POST VSB A2-254-25-037 used on 001P		001
013A	A225400231-202		. . . BRACKET BUY PN A225491004-002 used on 010A, 010B, 010C, 010D, 010F, 010G, 010H, 010J, 010K, 010L, 010M, 010N, 010P		002
017A	A225400231-214		. . . BRACKET BUY PN A225491004-232 used on 010A, 010B, 010C, 010D, 010F, 010G, 010H, 010J, 010K, 010L, 010M, 010N, 010P		001

- ITEM NOT ILLUSTRATED

FIG. ITEM	PART NUMBER	AIRLINE STOCK NUMBER	NOMENCLATURE 1234567	EFF CODE	UNITS PER ASSY
020A	A225400232-208		. . . FITTING used on 010A, 010B, 010C, 010D, 010F, 010G, 010H, 010J, 010K, 010L, 010M, 010N, 010P		002
021A	A225400232-208		. . . FITTING POST SB 25-1289 used on 010E		001
025A	A225400232-216		. . . FITTING POST SB 25-1289 used on 010E		001
030A	NAS1102E4-10		. . . SCREW used on 010A, 010B, 010C, 010D, 010F, 010G, 010H, 010J, 010K, 010L, 010M, 010N, 010P		004
031A	ABS0704-6-50		. . . SCREW POST SB 25-1289 used on 010E		002
035A	ABS0705-6-50		. . . SCREW POST SB 25-1289 used on 010E		002
-040A	NAS1833C08-370		. . . INSERT PRE VSB A2-254-25-037 USE AS REQUIRED POST SB 25-1214 used on 010A, 010B, 010C, 010D, 010E, 010F, 010G, 010H, 010J, 010K, 010L, 010M, 010N		AR
-040B	NAS1833C08-370		. . . INSERT POST VSB A2-254-25-037 used on 010P		008
-045A	012543000		. . . PLUG POST VSB A2-254-25-037 used on 010P		002

- ITEM NOT ILLUSTRATED

FIG. ITEM	PART NUMBER	AIRLINE STOCK NUMBER	NOMENCLATURE 1234567	EFF CODE	UNITS PER ASSY
-050A	NSA5054-08		. . . INSERT used on 010A, 010B, 010C, 010D, 010F, 010G, 010H, 010J, 010K, 010P		001
-060A	NAS1835C08		. . . INSERT used on 010A, 010B, 010C, 010D, 010E, 010F, 010G, 010H, 010J, 010K, 010L, 010M, 010N, 010P		007
-070A	NAS1833C3-370		. . . INSERT used on 010A, 010B, 010C, 010D, 010E, 010F, 010G, 010H, 010J, 010K, 010L, 010M, 010N, 010P		029
-080A	NSA5054-5		. . . INSERT used on 010A, 010B, 010C, 010D, 010E, 010F, 010G, 010H, 010J, 010K, 010L, 010M, 010N, 010P		012
-090A	NSA5054-3		. . . INSERT used on 010A, 010B, 010C, 010D, 010E, 010F, 010G, 010H, 010J, 010K, 010L, 010M, 010N, 010P		001
-100A	NSA5054-4		. . . INSERT used on 010A, 010B, 010C, 010D, 010E, 010F, 010G, 010H, 010J, 010K, 010L, 010M, 010N, 010P		008
-110A	NSA935405-01		. . . MOUNT used on 010A, 010B, 010C, 010D, 010E, 010F, 010G, 010H, 010J, 010K, 010L, 010M, 010N, 010P		010

- ITEM NOT ILLUSTRATED

FIG. ITEM	PART NUMBER	AIRLINE STOCK NUMBER	NOMENCLATURE 1234567	EFF CODE	UNITS PER ASSY
120A	550MBB1		. . HANDLE ASSY used on 001A, 001B, 001C, 001D, 001F, 001H, 001K, 001L, 001M, 001N, 001P		001
-120B	DCIN140-02-12		. . HANDLE ASSY used on 001E		001
-120C	550-33-300MBB		. . HANDLE ASSY used on 001G, 001J		001
130A	S7224		. . . SCREW-SPECIAL used on 120A, 120B, 120C		002
140A	8534		. . . PIN-SECURITY used on 120A, 120B, 120C		002
150A	8587		. . . WASHER-SPECIAL used on 120A, 120B, 120C		002
160A	A225401410-502		. . COVER-OXYGEN CONTAIN-ER ASSY used on 001A, 001B, 001C, 001D, 001E, 001F, 001K		001
-160B	A225401410-518		. . COVER-OXYGEN CONTAIN-ER ASSY used on 001G		001
-160C	A225401410-512		. . COVER-OXYGEN CONTAIN-ER ASSY used on 001H, 001P		001
-160D	A225401410-514		. . COVER-OXYGEN CONTAIN-ER ASSY used on 001J		001
-160E	A225401410-504		. . COVER-OXYGEN CONTAIN-ER ASSY used on 001L, 001M		001

- ITEM NOT ILLUSTRATED

FIG. ITEM	PART NUMBER	AIRLINE STOCK NUMBER	NOMENCLATURE 1234567	EFF CODE	UNITS PER ASSY
-160F	A225401410-508		. . COVER-OXYGEN CONTAIN-ER ASSY used on 001N		001
170A	A225400450-204		. . ANGLE used on 001A, 001B, 001C, 001D, 001E, 001F, 001G, 001H, 001J, 001K, 001L, 001M, 001N, 001P		001
180A	NAS1102-08-5		. . SCREW used on 001A, 001B, 001C, 001D, 001E, 001F, 001G, 001H, 001J, 001K, 001L, 001M, 001N, 001P		004
190A	NSA5067-08-1		. . NUT used on 001A, 001B, 001C, 001D, 001E, 001F, 001G, 001H, 001J, 001K, 001L, 001M, 001N, 001P		004
200A	A225400450-202		. . ANGLE used on 001A, 001B, 001C, 001D, 001E, 001F, 001G, 001H, 001J, 001K, 001L, 001M, 001N, 001P		002
210A	AE6702-85		. . CONTAINER ASSY-OXYGEN used on 001A		001
-210B	G2F212-85		. . CONTAINER ASSY-OXYGEN PRE VSB A2-254-25-100 used on 001B, 001C, 001D, 001F		001
-210C	22C150150320003		. . CONTAINER ASSY-OXYGEN used on 001E, 001K		001
-210D	G2F212-77		. . CONTAINER ASSY-OXYGEN used on 001G		001

- ITEM NOT ILLUSTRATED

FIG. ITEM	PART NUMBER	AIRLINE STOCK NUMBER	NOMENCLATURE 1234567	EFF CODE	UNITS PER ASSY
-210E	22C150150030003		. . CONTAINER ASSY-OXYGEN used on 001H, 001P		001
-210F	AE6702-58		. . CONTAINER ASSY-OXYGEN used on 001J		001
-210G	G2F212-51		. . CONTAINER ASSY-OXYGEN used on 001L, 001M		001
-210H	G2F212-18		. . CONTAINER ASSY-OXYGEN used on 001N		001
-210J	22G150150320400		. . CONTAINER ASSY-OXYGEN POST VSB A2-254-25-100 used on 001D		001
220A	NAS1096-2-5		. . SCREW PRE VSB A2-254-25-100 BUY PN NAS1801-08-5 used on 001A, 001B, 001C, 001D, 001E, 001F, 001G, 001H, 001J, 001K, 001L, 001M, 001N, 001P		008
-220B	NAS1096-2-5		. . SCREW POST VSB A2-254-25-100 BUY PN NAS1801-08-5 used on 001D		004
-225A	NAS1801-08-6		. . SCREW POST VSB A2-254-25-100 used on 001D		004
230A	NAS1149CN832R		. . WASHER used on 001A, 001B, 001C, 001D, 001E, 001F, 001G, 001H, 001J, 001K, 001L, 001M, 001N, 001P		019

- ITEM NOT ILLUSTRATED

FIG. ITEM	PART NUMBER	AIRLINE STOCK NUMBER	NOMENCLATURE 1234567	EFF CODE	UNITS PER ASSY
231A	NAS1149CN832R		. . WASHER POST SB 25-1289 used on 001E		009
240A	A225400451-202		. . STUD used on 001A, 001B, 001C, 001D, 001E, 001F, 001G, 001H, 001J, 001K, 001L, 001M, 001N, 001P		002
250A	A225401222-500		. . POST ASSY used on 001A, 001C, 001H, 001K, 001N, 001P		001
-250B	A225401222-502		. . POST ASSY used on 001B, 001D, 001F		001
-250C	A225401222-536		. . POST ASSY used on 001E		001
-250D	A225401222-540		. . POST ASSY used on 001G		001
-250E	A225401222-538		. . POST ASSY used on 001J		001
-250F	A225401222-506		. . POST ASSY used on 001L, 001M		001
260A	NAS514P832-4		. . . SCREW used on 250A, 250B, 250C, 250D, 250E, 250F		004
270A	NAS1068A08		. . . NUT BUY PN MS21075L08 used on 250A, 250B, 250C, 250D, 250E, 250F		004

- ITEM NOT ILLUSTRATED

FIG. ITEM	PART NUMBER	AIRLINE STOCK NUMBER	NOMENCLATURE 1234567	EFF CODE	UNITS PER ASSY
280A	NAS1096-2-7		. . SCREW BUY PN NAS1801-08-7 used on 001A, 001B, 001C, 001D, 001E, 001F, 001G, 001H, 001J, 001K, 001L, 001M, 001N, 001P		005
290A	2634DP437-110		. . CAP used on 001A, 001B, 001C, 001D, 001E, 001F, 001G, 001H, 001J, 001K, 001L, 001M, 001N, 001P		005
300A	NAS1096-3-9		. . SCREW BUY PN NAS1801-3-9 used on 001A, 001B, 001C, 001D, 001E, 001F, 001G, 001H, 001J, 001K, 001L, 001M, 001N, 001P		001
310A	A2547577004800		. . DISPENSER-TOILET SEAT COVER used on 001B, 001K A254-75770-048-00		001
-310B	A2547577007400		. . DISPENSER-TOILET SEAT COVER used on 001E		001
-310C	A2547577007600		. . DISPENSER-TOILET SEAT COVER used on 001H, 001P		001
-310D	A2547577007000		. . DISPENSER-TOILET SEAT COVER used on 001L		001
320A	NAS1100-08-4		. . SCREW used on 001B, 001E, 001H, 001K, 001L, 001P		002

- ITEM NOT ILLUSTRATED

FIG. ITEM	PART NUMBER	AIRLINE STOCK NUMBER	NOMENCLATURE 1234567	EFF CODE	UNITS PER ASSY
370A	AR197-3		. . HOOK-COAT used on 001E		001
380A	NAS514P832-7		. . SCREW used on 001E		001
390A	550-33-300MBB		. . HANDLE ASSY POST SB 25-1214 used on 001G		001
400A	S7224		. . . SCREW-SPECIAL used on 390A		002
410A	8534		. . . PIN-SECURITY used on 390A		002
420A	8587		. . . WASHER-SPECIAL used on 390A		002
430A	A2547380206000		. . SUPPORT POST SB 25-1214 used on 001C		001
-430B	A2547380208800		. . SUPPORT POST SB 25-1214 used on 001H, 001P		001
440A	NAS1096-2-7		. . SCREW POST SB 25-1214 BUY PN NAS1801-08-7 used on 001C, 001H, 001P		002
450A	NAS1149CN832R		. . WASHER POST SB 25-1214 used on 001C, 001H, 001P		002
-460A	NAS1833C08-370		. . INSERT POST SB 25-1214 used on 001C, 001G, 001H, 001P		002

- ITEM NOT ILLUSTRATED

FIG. ITEM	PART NUMBER	AIRLINE STOCK NUMBER	NOMENCLATURE 1234567	EFF CODE	UNITS PER ASSY
-470A	3550012		. . RIVET POST SB 25-1214 used on 001G		002
480A	A225401236-200		. . ANGLE POST SB 25-1289 used on 001E		001
490A	NAS1096-3-7		. . SCREW POST SB 25-1289 BUY PN NAS1801-3-7 used on 001E		004
500A	NAS1096-3-5		. . SCREW POST SB 25-1289 BUY PN NAS1801-3-5 used on 001E		005
510A	A225400208-000		. . DEVICE ASSY-EMERGENCY UNLOCKING,SINGLE DOOR POST SB 25-1316 used on 001E		001
520A	A225400208-200		. . . HOUSING-EMERGENCY UN-LOCKING DEVICE used on 510A		001
530A	A225400208-204		. . . STRIKE-EMERGENCY UN-LOCKING DEVICE used on 510A		001
540A	A225400208-202		. . . PIVOT-EMERGENCY UN-LOCKING DEVICE used on 510A		001
550A	A225400208-210		. . . PIN used on 510A		001
560A	SM1275-1KNM04		. . . CATCH-SNAP used on 510A		001

- ITEM NOT ILLUSTRATED

FIG. ITEM	PART NUMBER	AIRLINE STOCK NUMBER	NOMENCLATURE 1234567	EFF CODE	UNITS PER ASSY
570A	A225400208-208		. . . BOLT used on 510A		001
580A	A225400221-202		. . PLATE POST SB 25-1316 used on 001E		002
590A	NAS514P832-7		. . SCREW POST SB 25-1316 used on 001E		006
600A	NSA5067-08-1		. . NUT POST SB 25-1316 used on 001E		002

- ITEM NOT ILLUSTRATED

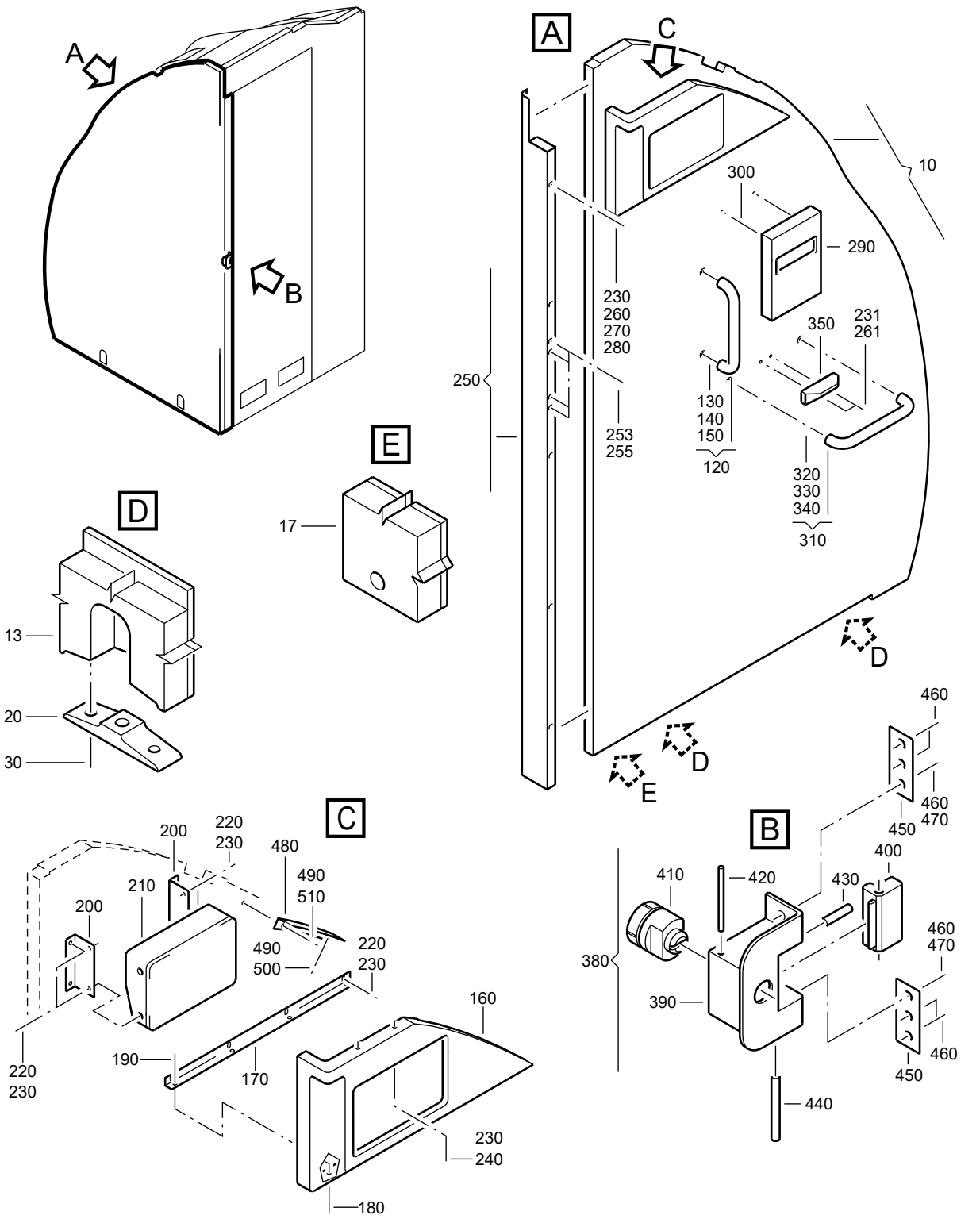

F_PL_254151_06_K_01_01

WALL-SIDE
Figure 06K/EN254151SHEET06K01

FIG. ITEM	PART NUMBER	AIRLINE STOCK NUMBER	NOMENCLATURE 1234567	EFF CODE	UNITS PER ASSY
06K					
-001A	D2549020605465		. WALL-SIDE NP used on 040C (25415101P) SEE 25-41-51-01P FOR NHA		RF
-001B	D2549020610865		. WALL-SIDE NP used on 040D (25415101P) SEE 25-41-51-01P FOR NHA		RF
-001C	D2549010512265		. WALL-SIDE NP used on 040E (25415101P) SEE 25-41-51-01P FOR NHA		RF
-001D	D2549010514065		. WALL-SIDE NP used on 040J (25415101P) SEE 25-41-51-01P FOR NHA		RF
-001E	D2549010510665		. WALL-SIDE NP used on 040L (25415101P) SEE 25-41-51-01P FOR NHA		RF
-001F	D2549030504265		. WALL-SIDE NP used on 040M (25415101P) SEE 25-41-51-01P FOR NHA		RF
-001G	D2549030508465		. WALL-SIDE NP used on 040A (25415101Q), 040L (25415101S), 040C(25415101V), 040B (25415101W) SEE 25-41-51-01Q FOR NHA SEE 25-41-51-01S FOR NHA SEE 25-41-51-01V FOR NHA SEE 25-41-51-01W FOR NHA		RF

- ITEM NOT ILLUSTRATED

FIG. ITEM	PART NUMBER	AIRLINE STOCK NUMBER	NOMENCLATURE 1234567		EFF CODE	UNITS PER ASSY
-001H	D2549020613665		. WALL-SIDE used on 040B (25415101Q), 040D (25415101T), 040J (25415141B), 040H (25415141D), 040J (25415141G), 040G(25415141K), 040H (25415141M), 040C (25415141N) SEE 25-41-51-01Q FOR NHA SEE 25-41-51-01T FOR NHA SEE 25-41-51-41B FOR NHA SEE 25-41-51-41D FOR NHA SEE 25-41-51-41G FOR NHA SEE 25-41-51-41K FOR NHA SEE 25-41-51-41M FOR NHA SEE 25-41-51-41N FOR NHA	NP		RF
-001J	D2549030509065		. WALL-SIDE used on 040A (25415101W), 040A (25415101X), 040C (25415101Y), 040A (25415141C), 040H (25415141F), 040G (25415141H) SEE 25-41-51-01W FOR NHA SEE 25-41-51-01X FOR NHA SEE 25-41-51-01Y FOR NHA SEE 25-41-51-41C FOR NHA SEE 25-41-51-41F FOR NHA SEE 25-41-51-41H FOR NHA	NP		RF
-001K	D2549020604665		. WALL-SIDE used on 040A (25415101R) SEE 25-41-51-01R FOR NHA	NP		RF
-001L	D2549030509465		. WALL-SIDE used on 040D (25415101Q) SEE 25-41-51-01Q FOR NHA	NP		RF

- ITEM NOT ILLUSTRATED

FIG. ITEM	PART NUMBER	AIRLINE STOCK NUMBER	NOMENCLATURE 1234567		EFF CODE	UNITS PER ASSY
-001M	D2549030508265		. WALL-SIDE PRE VSB A2-254-25-080 used on 040E (25415101Q) SEE 25-41-51-01Q FOR NHA	NP		RF
-001N	D2549020614865		. WALL-SIDE used on 040L (25415101N), 040L (25415101W), 040L(25415101Y), 040M (25415141F), 040N (25415141H) SEE 25-41-51-01N FOR NHA SEE 25-41-51-01W FOR NHA SEE 25-41-51-01Y FOR NHA SEE 25-41-51-41F FOR NHA SEE 25-41-51-41H FOR NHA	NP		RF
-001P	D2549020610865		. WALL-SIDE used on 040N (25415101P) SEE 25-41-51-01P FOR NHA	NP		RF
-001Q	R22540117200465		. WALL-SIDE POST VSB A2-254-25-080 used on 040P (25415101Q) SEE 25-41-51-01Q FOR NHA	NP		RF
010A	A225401231-596		. . WALL ASSY-SIDE,AFT used on 001A			001
-010B	A225401231-652		. . WALL ASSY-SIDE,AFT used on 001B			001
-010C	A225401231-502		. . WALL ASSY-SIDE,AFT used on 001C			001
-010D	A225401233-500		. . WALL ASSY-SIDE,AFT used on 001D			001
-010E	A225401233-514		. . WALL ASSY-SIDE,AFT used on 001E			001

- ITEM NOT ILLUSTRATED

FIG. ITEM	PART NUMBER	AIRLINE STOCK NUMBER	NOMENCLATURE 1234567	EFF CODE	UNITS PER ASSY
-010F	A225401233-524		. . WALL ASSY-SIDE,AFT used on 001F		001
-010G	A2254012338506		. . WALL ASSY-SIDE,AFT POST SB 25-1314 used on 001G		001
-010H	A225401233-540		. . WALL ASSY-SIDE,AFT used on 001H		001
-010J	A225401233-504		. . WALL ASSY-SIDE,AFT used on 001J, 001N		001
-010K	A225401231-566		. . WALL ASSY-SIDE,AFT used on 001K		001
-010L	A225401233-526		. . WALL ASSY-SIDE,AFT used on 001L		001
-010M	A225401233-510		. . WALL ASSY-SIDE,AFT used on 001M, 001Q		001
-010N	A225491231-558		. . WALL ASSY-SIDE,AFT POST SB 25-1289 used on 001P		001
013A	A225400231-202		. . . BRACKET BUY PN A225491004-002 used on 010A, 010B, 010C, 010D, 010E, 010F, 010G, 010H, 010J, 010K, 010L, 010M, 010N		002
017A	A225400231-214		. . . BRACKET BUY PN A225491004-232 used on 010A, 010B, 010C, 010D, 010E, 010F, 010G, 010H, 010J, 010K, 010L, 010M, 010N		001

- ITEM NOT ILLUSTRATED

FIG. ITEM	PART NUMBER	AIRLINE STOCK NUMBER	NOMENCLATURE 1234567	EFF CODE	UNITS PER ASSY
020A	A225400232-208		. . . FITTING used on 010A, 010B, 010C, 010D, 010E, 010F, 010G, 010H, 010J, 010K, 010L, 010M, 010N		002
030A	NAS1102E4-10		. . . SCREW used on 010A, 010B, 010C, 010D, 010E, 010F, 010G, 010H, 010J, 010K, 010L, 010M, 010N		004
-040A	NAS1833C08-370		. . . INSERT used on 010A, 010B, 010C, 010D, 010E, 010F, 010G, 010H, 010J, 010K, 010L, 010M, 010N		081
-050A	NSA5054-08		. . . INSERT used on 010B, 010D, 010E, 010F, 010G, 010H, 010N		001
-060A	NAS1835C08		. . . INSERT used on 010A, 010B, 010C, 010D, 010E, 010F, 010G, 010H, 010J, 010K, 010L, 010M, 010N		007
-070A	NAS1833C3-370		. . . INSERT USE AS REQUIRED used on 010A, 010B, 010C, 010D, 010E, 010F, 010G, 010H, 010J, 010K, 010L, 010M, 010N		AR
-080A	NSA5054-5		. . . INSERT used on 010A, 010B, 010C, 010D, 010E, 010F, 010G, 010H, 010J, 010K, 010L, 010M, 010N		012
-090A	NSA5054-3		. . . INSERT used on 010A, 010B, 010C, 010D, 010E, 010F, 010G, 010H, 010J, 010K, 010L, 010M, 010N		001

- ITEM NOT ILLUSTRATED

FIG. ITEM	PART NUMBER	AIRLINE STOCK NUMBER	NOMENCLATURE 1234567	EFF CODE	UNITS PER ASSY
-100A	NSA5054-4		. . . INSERT used on 010A, 010B, 010C, 010D, 010E, 010F, 010G, 010H, 010J, 010K, 010L, 010M, 010N		008
-110A	NSA935405-01		. . . MOUNT used on 010A, 010B, 010C, 010D, 010E, 010F, 010G, 010H, 010J, 010K, 010L, 010M, 010N		010
120A	550MBB1		. . HANDLE ASSY used on 001A, 001F, 001H, 001J, 001L, 001N		001
120B	550-33-300MBB		. . HANDLE ASSY used on 001B, 001C, 001D, 001E, 001G, 001K, 001M, 001P, 001Q		001
130A	S7224		. . . SCREW-SPECIAL used on 120A, 120B		002
140A	8534		. . . PIN-SECURITY used on 120A, 120B		002
150A	8587		. . . WASHER-SPECIAL used on 120A, 120B		002
160A	A225401410-502		. . COVER-OXYGEN CONTAIN-ER ASSY used on 001A, 001B, 001C, 001E, 001F, 001J, 001K, 001M, 001N, 001P, 001Q		001
-160B	A225401410-508		. . COVER-OXYGEN CONTAIN-ER ASSY used on 001D		001

- ITEM NOT ILLUSTRATED

FIG. ITEM	PART NUMBER	AIRLINE STOCK NUMBER	NOMENCLATURE 1234567	EFF CODE	UNITS PER ASSY
-160C	A225401410-510		. . COVER-OXYGEN CONTAIN-ER ASSY used on 001G		001
-160D	A225401410-504		. . COVER-OXYGEN CONTAIN-ER ASSY used on 001H, 001L		001
170A	A225400450-204		. . ANGLE used on 001A, 001B, 001C, 001D, 001E, 001F, 001G, 001H, 001J, 001K, 001L, 001M, 001N, 001P, 001Q		001
180A	NAS1102-08-5		. . SCREW used on 001A, 001B, 001C, 001D, 001E, 001F, 001G, 001H, 001J, 001K, 001L, 001M, 001N, 001P, 001Q		004
190A	NSA5067-08-1		. . NUT used on 001A, 001B, 001C, 001D, 001E, 001F, 001G, 001H, 001J, 001K, 001L, 001M, 001N, 001P, 001Q		004
200A	A225400450-202		. . ANGLE used on 001A, 001B, 001C, 001D, 001E, 001F, 001G, 001H, 001J, 001K, 001L, 001M, 001N, 001P, 001Q		002
210A	G2F212-85		. . CONTAINER ASSY-OXYGEN used on 001A		001
-210B	22C150150320003		. . CONTAINER ASSY-OXYGEN PRE VSB A2-254-25-080 used on 001B, 001F, 001K, 001M, 001P		001

- ITEM NOT ILLUSTRATED

FIG. ITEM	PART NUMBER	AIRLINE STOCK NUMBER	NOMENCLATURE 1234567	EFF CODE	UNITS PER ASSY
-210C	G2F212-25		. . CONTAINER ASSY-OXYGEN used on 001C		001
-210D	G2F212-18		. . CONTAINER ASSY-OXYGEN used on 001D		001
-210E	G2F212-85		. . CONTAINER ASSY-OXYGEN used on 001E, 001J, 001N		001
-210F	G2F212-75		. . CONTAINER ASSY-OXYGEN used on 001G		001
-210G	G2F212-51		. . CONTAINER ASSY-OXYGEN PRE VSB A2-254-25-046 used on 001H, 001L		001
-210H	22G150150320400		. . CONTAINER ASSY-OXYGEN POST VSB A2-254-25-080 used on 001Q		001
-210J	22G150150460400		. . CONTAINER ASSY-OXYGEN POST VSB A2-254-25-046 used on 001H		001
220A	NAS1096-2-5		. . SCREW BUY PN NAS1801-08-5 PRE VSB A2-254-25-046 PRE VSB A2-254-25-080 used on 001A, 001B, 001C, 001D, 001E, 001F, 001G, 001H, 001J, 001K, 001L, 001M, 001N, 001P		012
-220B	NAS1096-2-5		. . SCREW POST VSB A2-254-25-046 POST VSB A2-254-25-080 BUY PN NAS1801-08-5 used on 001H, 001Q		008

- ITEM NOT ILLUSTRATED

FIG. ITEM	PART NUMBER	AIRLINE STOCK NUMBER	NOMENCLATURE 1234567	EFF CODE	UNITS PER ASSY
-222A	NAS1801-08-6		. . SCREW POST VSB A2-254-25-046 POST VSB A2-254-25-080 used on 001H, 001Q		004
230A	NAS1149CN832R		. . WASHER used on 001A, 001B, 001C, 001D, 001E, 001F, 001G, 001H, 001J, 001K, 001L, 001M, 001N, 001P, 001Q		019
231A	NAS1149CN832R		. . WASHER used on 001F, 001H, 001J, 001L, 001N		002
240A	A225400451-202		. . STUD used on 001A, 001B, 001C, 001D, 001E, 001F, 001G, 001H, 001J, 001K, 001L, 001M, 001N, 001P, 001Q		002
250A	A225401222-526		. . POST ASSY used on 001A		001
-250B	A225401222-534		. . POST ASSY used on 001B, 001P		001
-250C	A225401222-502		. . POST ASSY used on 001C, 001D		001
-250D	A225401222-500		. . POST ASSY used on 001E, 001F, 001J, 001M, 001N, 001Q		001
-250E	A225401222-530		. . POST ASSY used on 001G		001
-250F	A225401222-520		. . POST ASSY used on 001K		001

- ITEM NOT ILLUSTRATED

FIG. ITEM	PART NUMBER	AIRLINE STOCK NUMBER	NOMENCLATURE 1234567	EFF CODE	UNITS PER ASSY
-250G	A225401222-528		. . POST ASSY used on 001H		001
-250H	A225401222-506		. . POST ASSY used on 001L		001
253A	NAS514P832-4		. . . SCREW used on 250A, 250B, 250C, 250D, 250E, 250F, 250G,250H		004
255A	NAS1068A08		. . . NUT BUY PN MS21075L08 used on 250A, 250B, 250C, 250D, 250E, 250F, 250G,250H		004
260A	NAS1096-2-7		. . SCREW BUY PN NAS1801-08-7 used on 001A, 001B, 001C, 001D, 001E, 001F, 001G, 001H, 001J, 001K, 001L, 001M, 001N, 001P, 001Q		005
261A	NAS1096-2-7		. . SCREW BUY PN NAS1801-08-7 used on 001F, 001H, 001J, 001L, 001N		002
270A	2634DP437-110		. . CAP used on 001A, 001B, 001C, 001D, 001E, 001F, 001G, 001H, 001J, 001K, 001L, 001M, 001N, 001P, 001Q		005
280A	NAS1096-3-9		. . SCREW BUY PN NAS1801-3-9 used on 001A, 001B, 001C, 001D, 001E, 001F, 001G, 001H, 001J, 001K, 001L, 001M, 001N, 001P, 001Q		001

- ITEM NOT ILLUSTRATED

FIG. ITEM	PART NUMBER	AIRLINE STOCK NUMBER	NOMENCLATURE 1234567	EFF CODE	UNITS PER ASSY
290A	A2547577004800		. . DISPENSER-TOILET SEAT COVER used on 001A, 001B, 001K, 001M, 001P, 001Q A254-75770-048-00		001
-290B	A2547577007000		. . DISPENSER-TOILET SEAT COVER used on 001H, 001L		001
300A	NAS1100-08-4		. . SCREW used on 001A, 001B, 001H, 001K, 001L, 001M, 001P, 001Q		002
310A	550-33-300MBB		. . HANDLE ASSY POST SB 25-1214 used on 001C, 001D, 001E, 001G, 001M, 001Q		001
320A	S7224		. . . SCREW-SPECIAL used on 310A		002
330A	8534		. . . PIN-SECURITY used on 310A		002
340A	8587		. . . WASHER-SPECIAL used on 310A		002
350A	A2547380206000		. . SUPPORT used on 001F, 001J, 001N		001
-350B	A2547380208400		. . SUPPORT used on 001H, 001L		001
-360A	NAS1833C08-370		. . INSERT POST SB 25-1214 used on 001C		002
-370A	3550012		. . RIVET POST SB 25-1214 used on 001C		006

- ITEM NOT ILLUSTRATED

FIG. ITEM	PART NUMBER	AIRLINE STOCK NUMBER	NOMENCLATURE 1234567	EFF CODE	UNITS PER ASSY
380A	A225400208-000		. . DEVICE ASSY-EMERGENCY UNLOCKING,SINGLE DOOR POST SB 25-1316 used on 001N		001
390A	A225400208-200		. . . HOUSING-EMERGENCY UN-LOCKING DEVICE used on 380A		001
400A	A225400208-204		. . . STRIKE-EMERGENCY UN-LOCKING DEVICE used on 380A		001
410A	A225400208-202		. . . PIVOT-EMERGENCY UN-LOCKING DEVICE used on 380A		001
420A	A225400208-210		. . . PIN used on 380A		001
430A	SM1275-1KNM04		. . . CATCH-SNAP used on 380A		001
440A	A225400208-208		. . . BOLT used on 380A		001
450A	A225400221-202		. . PLATE POST SB 25-1316 used on 001N		002
460A	NAS514P832-7		. . SCREW POST SB 25-1316 used on 001N		006
470A	NSA5067-08-1		. . NUT POST SB 25-1316 used on 001N		002
480A	A225401236-200		. . ANGLE used on 001P		001

- ITEM NOT ILLUSTRATED

FIG. ITEM	PART NUMBER	AIRLINE STOCK NUMBER	NOMENCLATURE 1234567	EFF CODE	UNITS PER ASSY
490A	NAS1149C0332R		. . WASHER used on 001P		009
500A	NAS1096-3-7		. . SCREW BUY PN NAS1801-3-7 used on 001P		004
510A	NAS1096-3-5		. . SCREW BUY PN NAS1801-3-5 used on 001P		005
-520A	NAS1833C08-370		. . INSERT used on 001P		005

- ITEM NOT ILLUSTRATED

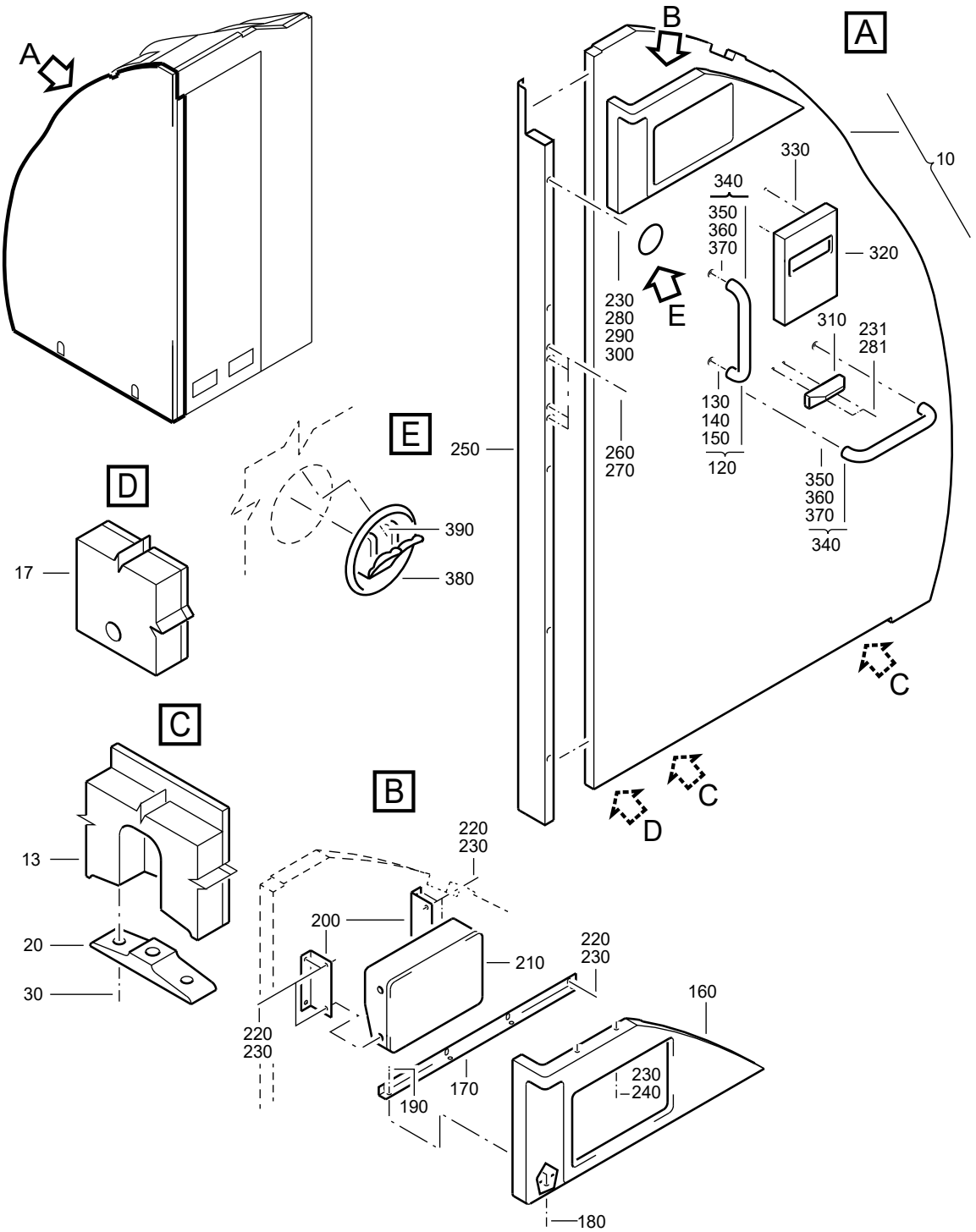

F_PL_254151_06_L_01_00

WALL-SIDE
Figure 06L/EN254151SHEET06L01

FIG. ITEM	PART NUMBER	AIRLINE STOCK NUMBER	NOMENCLATURE 1234567		EFF CODE	UNITS PER ASSY
06L						
-001A	D2549020506865		. WALL-SIDE used on 040B (25415101R) SEE 25-41-51-01R FOR NHA	NP		RF
-001B	D2549010600265		. WALL-SIDE PRE VSB A2-254-25-037 used on 040F (25415101Q), 040H (25415101S) SEE 25-41-51-01Q FOR NHA SEE 25-41-51-01S FOR NHA	NP		RF
-001C	D2549020700465		. WALL-SIDE used on 040M (25415101W), 040J (25415101Z) SEE 25-41-51-01W FOR NHA SEE 25-41-51-01Z FOR NHA	NP		RF
-001D	D2549020506665		. WALL-SIDE used on 040H (25415101Q) SEE 25-41-51-01Q FOR NHA	NP		RF
-001E	D2549030508665		. WALL-SIDE used on 040J (25415101Q) SEE 25-41-51-01Q FOR NHA	NP		RF
-001F	D2549020614665		. WALL-SIDE used on 040K (25415101Q), 040A (25415141D) SEE 25-41-51-01Q FOR NHA SEE 25-41-51-41D FOR NHA	NP		RF
-001G	D2549010514465		. WALL-SIDE used on 040L (25415101Q) SEE 25-41-51-01Q FOR NHA	NP		RF
-001H	D2549010600065		. WALL-SIDE used on 040M (25415101Q), 040A (25415101T) SEE 25-41-51-01Q FOR NHA SEE 25-41-51-01T FOR NHA	NP		RF

- ITEM NOT ILLUSTRATED

FIG. ITEM	PART NUMBER	AIRLINE STOCK NUMBER	NOMENCLATURE 1234567		EFF CODE	UNITS PER ASSY
-001J	D2549020612265		. WALL-SIDE used on 040A (25415101S), 040F (25415101W), 040E(25415101Y), 040G (254151410), 040L (25415141G) SEE 25-41-51-01S FOR NHA SEE 25-41-51-01W FOR NHA SEE 25-41-51-01Y FOR NHA SEE 25-41-51-410 FOR NHA SEE 25-41-51-41G FOR NHA	NP		RF
-001K	D2549020614465		. WALL-SIDE used on 040B (25415101S), 040M (25415101T), 040F (25415101V), 040H (25415101W), 040C (25415101Z), 040L(25415141B), 040C (25415141C), 040D (25415141G), 040D(25415141H), 040E (25415141M), 040E (25415141N) SEE 25-41-51-01S FOR NHA SEE 25-41-51-01T FOR NHA SEE 25-41-51-01V FOR NHA SEE 25-41-51-01W FOR NHA SEE 25-41-51-01Z FOR NHA SEE 25-41-51-41B FOR NHA SEE 25-41-51-41C FOR NHA SEE 25-41-51-41G FOR NHA SEE 25-41-51-41H FOR NHA SEE 25-41-51-41M FOR NHA SEE 25-41-51-41N FOR NHA	NP		RF
-001L	D2549030508865		. WALL-SIDE used on 040C (25415101S) SEE 25-41-51-01S FOR NHA	NP		RF
-001M	D2549020612665		. WALL-SIDE used on 040D (25415101S) SEE 25-41-51-01S FOR NHA	NP		RF

- ITEM NOT ILLUSTRATED

FIG. ITEM	PART NUMBER	AIRLINE STOCK NUMBER	NOMENCLATURE 1234567	EFF CODE	UNITS PER ASSY
-001N	R22540117500265		. WALL-SIDE NP POST VSB A2-254-25-037 used on 040N (25415101Q) SEE 25-41-51-01Q FOR NHA		RF
010A	A225401231-642		. . WALL ASSY-SIDE,AFT used on 001A		001
-010B	A225401233-508		. . WALL ASSY-SIDE,AFT PRE VSB A2-254-25-037 used on 001B		001
-010C	A2254012338574		. . WALL ASSY-SIDE,AFT used on 001C		001
-010D	A225401233-542		. . WALL ASSY-SIDE,AFT used on 001D		001
-010E	A225401233-530		. . WALL ASSY-SIDE,AFT used on 001E		001
-010F	A225401233-538		. . WALL ASSY-SIDE,AFT used on 001F		001
-010G	A225401233-544		. . WALL ASSY-SIDE,AFT used on 001G		001
-010H	A225401233-518		. . WALL ASSY-SIDE,AFT used on 001H		001
-010J	A225401233-502		. . WALL ASSY-SIDE,AFT used on 001J		001
-010K	A225401233-528		. . WALL ASSY-SIDE,AFT used on 001K		001
-010L	A225401233-546		. . WALL ASSY-SIDE,AFT used on 001L		001
-010M	A225401233-554		. . WALL ASSY-SIDE,AFT used on 001M		001

- ITEM NOT ILLUSTRATED

FIG. ITEM	PART NUMBER	AIRLINE STOCK NUMBER	NOMENCLATURE 1234567	EFF CODE	UNITS PER ASSY
-010N	A225401231-678		. . WALL ASSY-SIDE,AFT POST VSB A2-254-25-037 used on 001N		001
013A	A225400231-202		. . . BRACKET BUY PN A225491004-002 used on 010A, 010B, 010C, 010D, 010E, 010F, 010G, 010H, 010J, 010K, 010L, 010M, 010N		002
017A	A225400231-214		. . . BRACKET BUY PN A225491004-232 used on 010A, 010B, 010C, 010D, 010E, 010F, 010G, 010H, 010J, 010K, 010L, 010M, 010N		001
020A	A225400232-208		. . . FITTING used on 010A, 010B, 010C, 010D, 010E, 010F, 010G, 010H, 010J, 010K, 010L, 010M, 010N		002
030A	NAS1102E4-10		. . . SCREW used on 010A, 010B, 010C, 010D, 010E, 010F, 010G, 010H, 010J, 010K, 010L, 010M, 010N		004
-040A	NAS1833C08-370		. . . INSERT PRE VSB A2-254-25-037 USE AS REQUIRED used on 010A, 010B, 010C, 010D, 010E, 010F, 010G, 010H, 010J, 010K, 010L, 010M		AR
-040B	NAS1833C08-370		. . . INSERT POST VSB A2-254-25-037 used on 010N		008
-045A	012543000		. . . PLUG POST VSB A2-254-25-037 used on 010N		002

- ITEM NOT ILLUSTRATED

FIG. ITEM	PART NUMBER	AIRLINE STOCK NUMBER	NOMENCLATURE 1234567	EFF CODE	UNITS PER ASSY
-050A	NSA5054-08		. . . INSERT used on 010A, 010H, 010J, 010M		001
-060A	NAS1835C08		. . . INSERT used on 010A, 010B, 010C, 010D, 010E, 010F, 010G, 010H, 010J, 010K, 010L, 010M, 010N		007
-070A	NAS1833C3-370		. . . INSERT used on 010A, 010B, 010C, 010D, 010E, 010F, 010G, 010H, 010J, 010K, 010L, 010M, 010N		029
-080A	NSA5054-5		. . . INSERT used on 010A, 010B, 010C, 010D, 010E, 010F, 010G, 010H, 010J, 010K, 010L, 010M, 010N		012
-090A	NSA5054-3		. . . INSERT used on 010A, 010B, 010C, 010D, 010E, 010F, 010G, 010H, 010J, 010K, 010L, 010M, 010N		001
-100A	NSA5054-4		. . . INSERT used on 010A, 010B, 010C, 010D, 010E, 010F, 010G, 010H, 010J, 010K, 010L, 010M, 010N		008
-110A	NSA935405-01		. . . MOUNT used on 010A, 010B, 010C, 010D, 010E, 010F, 010G, 010H, 010J, 010K, 010L, 010M, 010N		010
120A	550MBB1		. . HANDLE ASSY used on 001A, 001B, 001D, 001G, 001H, 001K, 001M, 010N		001
130A	S7224		. . . SCREW-SPECIAL used on 120A		002

- ITEM NOT ILLUSTRATED

FIG. ITEM	PART NUMBER	AIRLINE STOCK NUMBER	NOMENCLATURE 1234567	EFF CODE	UNITS PER ASSY
140A	8534		. . . PIN-SECURITY used on 120A		002
150A	8587		. . . WASHER-SPECIAL used on 120A		002
160A	A225401410-502		. . COVER-OXYGEN CONTAIN-ER ASSY used on 001A, 001C, 001D, 001F, 001G, 001H, 001K, 001L, 001M		001
-160B	A225401410-512		. . COVER-OXYGEN CONTAIN-ER ASSY used on 001B, 010N		001
-160C	A225401410-514		. . COVER-OXYGEN CONTAIN-ER ASSY used on 001E		001
160D	A225401410-518		. . COVER-OXYGEN CONTAIN-ER ASSY used on 001J		001
170A	A225400450-204		. . ANGLE used on 001A, 001B, 001C, 001D, 001E, 001F, 001G, 001H, 001J, 001K, 001L, 001M, 010N		001
180A	NAS1102-08-5		. . SCREW used on 001A, 001B, 001C, 001D, 001E, 001F, 001G, 001H, 001J, 001K, 001L, 001M, 010N		004
190A	NSA5067-08-1		. . NUT used on 001A, 001B, 001C, 001D, 001E, 001F, 001G, 001H, 001J, 001K, 001L, 001M, 010N		004

- ITEM NOT ILLUSTRATED

FIG. ITEM	PART NUMBER	AIRLINE STOCK NUMBER	NOMENCLATURE 1234567	EFF CODE	UNITS PER ASSY
200A	A225400450-202		. . ANGLE used on 001A, 001B, 001C, 001D, 001E, 001F, 001G, 001H, 001J, 001K, 001L, 001M, 010N		002
210A	G2F212-25		. . CONTAINER ASSY-OXYGEN used on 001A		001
-210B	22C150150030003		. . CONTAINER ASSY-OXYGEN used on 001B, 010N		001
-210C	22C150150320003		. . CONTAINER ASSY-OXYGEN used on 001D, 001G, 001H, 001L		001
-210D	AE6702-58		. . CONTAINER ASSY-OXYGEN used on 001E		001
-210E	G2F212-85		. . CONTAINER ASSY-OXYGEN used on 001C, 001F, 001K, 001M		001
-210F	G2F212-77		. . CONTAINER ASSY-OXYGEN used on 001J		001
220A	NAS1096-2-5		. . SCREW BUY PN NAS1801-08-5 used on 001A, 001B, 001C, 001D, 001E, 001F, 001G, 001H, 001J, 001K, 001L, 001M, 010N		008
230A	NAS1149CN832R		. . WASHER used on 001A, 001B, 001C, 001D, 001E, 001F, 001G, 001H, 001J, 001K, 001L, 001M, 010N		013
231A	NAS1149CN832R		. . WASHER POST SB 25-1214 used on 001A, 001B, 001D, 001G, 001H, 001K, 001M, 010N		002

- ITEM NOT ILLUSTRATED

FIG. ITEM	PART NUMBER	AIRLINE STOCK NUMBER	NOMENCLATURE 1234567	EFF CODE	UNITS PER ASSY
240A	A225400451-202		. . STUD used on 001A, 001B, 001C, 001D, 001E, 001F, 001G, 001H, 001J, 001K, 001L, 001M, 010N		002
250A	A225401222-500		. . POST ASSY used on 001A, 001B, 001C, 001D, 001F, 001L, 001M, 010N		001
-250B	A225401222-538		. . POST ASSY used on 001E		001
-250C	A225401222-502		. . POST ASSY used on 001G, 001H, 001K		001
-250D	A225401222-540		. . POST ASSY used on 001J		001
260A	NAS514P832-4		. . . SCREW used on 250A, 250B, 250C, 250D		004
270A	NAS1068A08		. . . NUT BUY PN MS21075L08 used on 250A, 250B, 250C, 250D		004
280A	NAS1096-2-7		. . SCREW BUY PN NAS1801-08-7 used on 001A, 001B, 001C, 001D, 001E, 001F, 001G, 001H, 001J, 001K, 001L, 001M, 010N		005
281A	NAS1096-2-7		. . SCREW POST SB 25-1214 BUY PN NAS1801-08-7 used on 001A, 001B, 001D, 001G, 001H, 001K, 001M, 010N		002

- ITEM NOT ILLUSTRATED

FIG. ITEM	PART NUMBER	AIRLINE STOCK NUMBER	NOMENCLATURE 1234567	EFF CODE	UNITS PER ASSY
290A	2634DP437-110		. . CAP used on 001A, 001B, 001C, 001D, 001E, 001F, 001G, 001H, 001J, 001K, 001L, 001M, 010N		005
300A	NAS1096-3-9		. . SCREW BUY PN NAS1801-3-9 used on 001A, 001B, 001C, 001D, 001E, 001F, 001G, 001H, 001J, 001K, 001L, 001M, 010N		001
310A	A2547380208800		. . SUPPORT used on 001B, 010N		001
-310B	A2547380206000		. . SUPPORT POST SB 25-1214 used on 001A, 001D, 001G, 001H, 001K, 001M		001
320A	A2547577007600		. . DISPENSER-TOILET SEAT COVER used on 001B, 010N		001
-320B	A2547577004800		. . DISPENSER-TOILET SEAT COVER used on 001F, 001G, 001K, 001L, 001M A254-75770-048-00		001
330A	NAS1100-08-4		. . SCREW used on 001B, 001F, 001G, 001K, 001L, 001M, 010N		002
340A	550-33-300MBB		. . HANDLE ASSY used on 001C, 001E, 001F, 001J, 001L		002
350A	S7224		. . . SCREW-SPECIAL used on 340A		002

- ITEM NOT ILLUSTRATED

FIG. ITEM	PART NUMBER	AIRLINE STOCK NUMBER	NOMENCLATURE 1234567	EFF CODE	UNITS PER ASSY
360A	8534		. . . PIN-SECURITY used on 340A		002
370A	8587		. . . WASHER-SPECIAL used on 340A		002
380A	AR197-3		. . HOOK-COAT used on 001M		001
390A	NAS514P832-7		. . SCREW used on 001M		001

- ITEM NOT ILLUSTRATED

THIS PAGE IS INTENTIONALLY LEFT BLANK

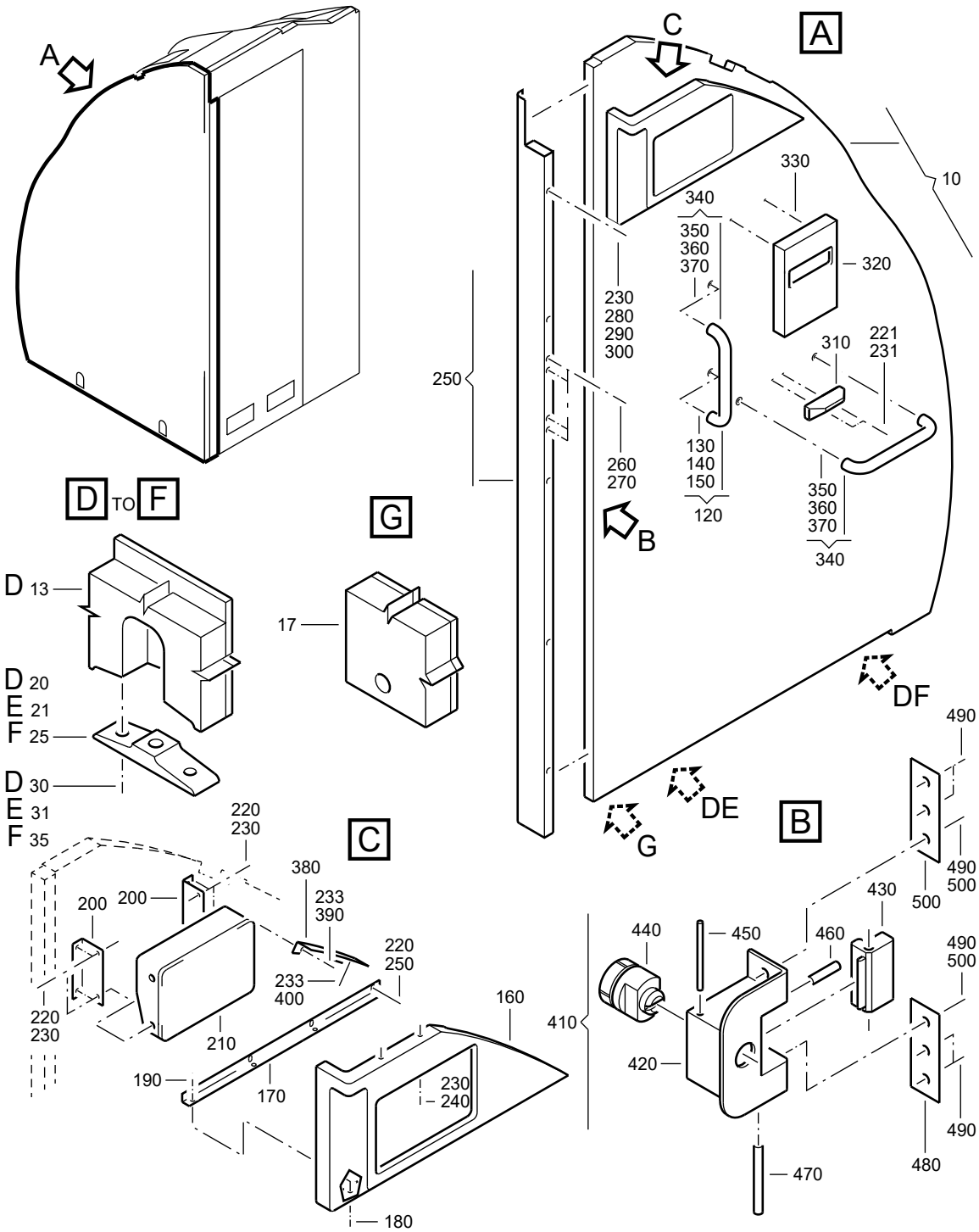

F_PL_254151_06_M_01_00

WALL-SIDE
Figure 06M/EN254151SHEET06M01

FIG. ITEM	PART NUMBER	AIRLINE STOCK NUMBER	NOMENCLATURE 1234567	EFF CODE	UNITS PER ASSY
06M					
-001A	D2549030509265		. WALL-SIDE NP used on 040E (25415101S), 040A (25415101V) SEE 25-41-51-01S FOR NHA SEE 25-41-51-01V FOR NHA		RF
-001B	D2549020613065		. WALL-SIDE NP used on 040G (25415101S) SEE 25-41-51-01S FOR NHA		RF
-001C	D2549010600665		. WALL-SIDE NP used on 040F (25415101S), 040B (25415101T), 040J(25415101V), 040D (25415101Y), 040F (25415141F), 040K(25415141G) SEE 25-41-51-01S FOR NHA SEE 25-41-51-01T FOR NHA SEE 25-41-51-01V FOR NHA SEE 25-41-51-01Y FOR NHA SEE 25-41-51-41F FOR NHA SEE 25-41-51-41G FOR NHA		RF
-001D	D2549030511865		. WALL-SIDE NP used on 040J (25415101S), 040E (25415101U), 040B(25415101V), 040D (25415101Z), 040J (25415141A), 040G(25415141D), 040E (25415141H), 040C (25415141J) SEE 25-41-51-01S FOR NHA SEE 25-41-51-01U FOR NHA SEE 25-41-51-01V FOR NHA SEE 25-41-51-01Z FOR NHA SEE 25-41-51-41A FOR NHA SEE 25-41-51-41D FOR NHA SEE 25-41-51-41H FOR NHA SEE 25-41-51-41J FOR NHA		RF

- ITEM NOT ILLUSTRATED

FIG. ITEM	PART NUMBER	AIRLINE STOCK NUMBER	NOMENCLATURE 1234567		EFF CODE	UNITS PER ASSY
-001E	D2549030508065		. WALL-SIDE used on 040K (25415101S) SEE 25-41-51-01S FOR NHA	NP		RF
-001F	D2549020701465		. WALL-SIDE used on 040C (25415101T), 040B (25415141D), 040C(25415141K), 040C (25415141M) SEE 25-41-51-01T FOR NHA SEE 25-41-51-41D FOR NHA SEE 25-41-51-41K FOR NHA SEE 25-41-51-41M FOR NHA	NP		RF
-001G	D2549010601265		. WALL-SIDE used on 040E (25415101T), 040E (254151410), 040D(25415141A), 040C (25415141H), 040B (25415141M) SEE 25-41-51-01T FOR NHA SEE 25-41-51-410 FOR NHA SEE 25-41-51-41A FOR NHA SEE 25-41-51-41H FOR NHA SEE 25-41-51-41M FOR NHA	NP		RF
-001H	D2549030510865		. WALL-SIDE used on 040G (25415101T), 040E (25415101V), 040J (25415141C), 040L (25415141D), 040H (25415141H), 040E (25415141K) SEE 25-41-51-01T FOR NHA SEE 25-41-51-01V FOR NHA SEE 25-41-51-41C FOR NHA SEE 25-41-51-41D FOR NHA SEE 25-41-51-41H FOR NHA SEE 25-41-51-41K FOR NHA	NP		RF
-001J	D2549030511465		. WALL-SIDE used on 040D (25415101U) SEE 25-41-51-01U FOR NHA	NP		RF

- ITEM NOT ILLUSTRATED

FIG. ITEM	PART NUMBER	AIRLINE STOCK NUMBER	NOMENCLATURE 1234567	EFF CODE	UNITS PER ASSY
-001K	D2549020507065		. WALL-SIDE NP used on 040J (25415101T), 040K (25415101V) SEE 25-41-51-01T FOR NHA SEE 25-41-51-01V FOR NHA		RF
-001L	D2549020613265		. WALL-SIDE NP used on 040K (25415101T), 040C (25415101W), 040A(25415141L) SEE 25-41-51-01T FOR NHA SEE 25-41-51-01W FOR NHA SEE 25-41-51-41L FOR NHA		RF
-001M	D2549020703265		. WALL-SIDE NP used on 040L (25415101T), 040H (254151410), 040A(25415141A) SEE 25-41-51-01T FOR NHA SEE 25-41-51-410 FOR NHA SEE 25-41-51-41A FOR NHA		RF
-001N	D2549020706265		. WALL-SIDE NP used on 040H (25415141C) SEE 25-41-51-41C FOR NHA		RF
010A	A225401233-548		. . WALL ASSY-SIDE,AFT used on 001A		001
-010B	A225491231-578		. . WALL ASSY-SIDE,AFT POST SB 25-1289 used on 001B		001
-010C	A225401233-556		. . WALL ASSY-SIDE,AFT used on 001C		001
-010D	A225401233-508		. . WALL ASSY-SIDE,AFT used on 001D		001
-010E	A225401233-520		. . WALL ASSY-SIDE,AFT used on 001E		001

- ITEM NOT ILLUSTRATED

FIG. ITEM	PART NUMBER	AIRLINE STOCK NUMBER	NOMENCLATURE 1234567	EFF CODE	UNITS PER ASSY
-010F	A225401233-516		. . WALL ASSY-SIDE,AFT used on 001F		001
-010G	A225401233-560		. . WALL ASSY-SIDE,AFT used on 001G		001
-010H	A225401233-564		. . WALL ASSY-SIDE,AFT used on 001H		001
-010J	A225401233-580		. . WALL ASSY-SIDE,AFT used on 001J		001
-010K	A225401233-536		. . WALL ASSY-SIDE,AFT used on 001K		001
-010L	A225401233-550		. . WALL ASSY-SIDE,AFT used on 001L, 001N		001
-010M	A225401233-558		. . WALL ASSY-SIDE,AFT used on 001M		001
013A	A225400231-202		. . . BRACKET BUY PN A225491004-002 used on 010A, 010C, 010D, 010E, 010F, 010G, 010H, 010J, 010K, 010L, 010M		002
017A	A225400231-214		. . . BRACKET BUY PN A225491004-232 used on 010A, 010C, 010D, 010E, 010F, 010G, 010H, 010J, 010K, 010L, 010M		001
020A	A225400232-208		. . . FITTING used on 010A, 010C, 010D, 010E, 010F, 010G, 010H, 010J, 010K, 010L, 010M		002
021A	A225400232-208		. . . FITTING POST SB 25-1289 used on 010B		001

- ITEM NOT ILLUSTRATED

FIG. ITEM	PART NUMBER	AIRLINE STOCK NUMBER	NOMENCLATURE 1234567	EFF CODE	UNITS PER ASSY
025A	A225400232-216		. . . FITTING POST SB 25-1289 used on 010B		001
030A	NAS1102E4-10		. . . SCREW used on 010A, 010B, 010C, 010D, 010E, 010F, 010H, 010J, 010K, 010L, 010M		004
031A	ABS0704-6-50		. . . SCREW POST SB 25-1289 used on 010B, 010G		002
035A	ABS0705-6-50		. . . SCREW POST SB 25-1289 used on 010B, 010G		002
-040A	NAS1833C08-370		. . . INSERT used on 010A, 010B, 010C, 010D, 010E, 010F, 010G, 010H, 010J, 010K, 010L, 010M		084
-050A	NSA5054-08		. . . INSERT used on 010A, 010B		001
-060A	NAS1835C08		. . . INSERT used on 010A, 010B, 010C, 010D, 010E, 010F, 010G, 010H, 010J, 010K, 010L, 010M		007
-070A	NAS1833C3-370		. . . INSERT used on 010A, 010B, 010C, 010D, 010E, 010F, 010G, 010H, 010J, 010K, 010L, 010M		029
-080A	NSA5054-5		. . . INSERT used on 010A, 010B, 010C, 010D, 010E, 010F, 010G, 010H, 010J, 010K, 010L, 010M		012

- ITEM NOT ILLUSTRATED

FIG. ITEM	PART NUMBER	AIRLINE STOCK NUMBER	NOMENCLATURE 1234567	EFF CODE	UNITS PER ASSY
-090A	NSA5054-3		. . . INSERT used on 010A, 010B, 010C, 010D, 010E, 010F, 010G, 010H, 010J, 010K, 010L, 010M		001
-100A	NSA5054-4		. . . INSERT used on 010A, 010B, 010C, 010D, 010E, 010F, 010G, 010H, 010J, 010K, 010L, 010M		008
-110A	NSA935405-01		. . . MOUNT used on 010A, 010B, 010C, 010D, 010E, 010F, 010G, 010H, 010J, 010K, 010L, 010M		010
120A	550MBB1		. . HANDLE ASSY used on 001A, 001C, 001D, 001E, 001J, 001K, 001M		001
130A	S7224		. . . SCREW-SPECIAL used on 120A		002
140A	8534		. . . PIN-SECURITY used on 120A		002
150A	8587		. . . WASHER-SPECIAL used on 120A		002
160A	A225401410-502		. . COVER-OXYGEN CONTAIN-ER ASSY used on 001A, 001B, 001C, 001E, 001F, 001G, 001H, 001J, 001L, 001M, 001N		001
-160B	A225401410-512		. . COVER-OXYGEN CONTAIN-ER ASSY used on 001D		001
-160C	A225401410-504		. . COVER-OXYGEN CONTAIN-ER ASSY used on 001K		001

- ITEM NOT ILLUSTRATED

FIG. ITEM	PART NUMBER	AIRLINE STOCK NUMBER	NOMENCLATURE 1234567	EFF CODE	UNITS PER ASSY
170A	A225400450-204		. . ANGLE used on 001A, 001B, 001C, 001D, 001E, 001F, 001G, 001H, 001J, 001K, 001L, 001M, 001N		001
180A	NAS1102-08-5		. . SCREW used on 001A, 001B, 001C, 001D, 001E, 001F, 001G, 001H, 001J, 001K, 001L, 001M, 001N		004
190A	NSA5067-08-1		. . NUT used on 001A, 001B, 001C, 001D, 001E, 001F, 001G, 001H, 001J, 001K, 001L, 001M, 001N		004
200A	A225400450-202		. . ANGLE used on 001A, 001B, 001C, 001D, 001E, 001F, 001G, 001H, 001J, 001K, 001L, 001M, 001N		002
210A	G2F212-85		. . CONTAINER ASSY-OXYGEN PRE VSB A2-254-25-154 PRE VSB A2-254-25-047 used on 001A, 001C, 001E, 001F, 001G, 001J, 001L, 001M, 001N		001
-210B	22C150150320003		. . CONTAINER ASSY-OXYGEN used on 001B		001
-210C	22C150150030004		. . CONTAINER ASSY-OXYGEN used on 001D		001
-210D	E2F212-85		. . CONTAINER ASSY-OXYGEN PRE VSB A2-254-25-069 PRE VSB A2-254-25-100 used on 001H		001
-210E	22C150150090004		. . CONTAINER ASSY-OXYGEN used on 001K		001

- ITEM NOT ILLUSTRATED

FIG. ITEM	PART NUMBER	AIRLINE STOCK NUMBER	NOMENCLATURE 1234567	EFF CODE	UNITS PER ASSY
-210F	22G220150320400		. . CONTAINER ASSY-OXYGEN POST VSB A2-254-25-069 POST VSB A2-254-25-100 used on 001H		001
-210G	22G150150320400		. . CONTAINER ASSY-OXYGEN POST VSB A2-254-25-047 used on 001C, 001G		001
-210H	22C22L150320009		. . CONTAINER ASSY-OXYGEN POST VSB A2-254-25-154 used on 001L		001
220A	NAS1096-2-5		. . SCREW PRE VSB A2-254-25-154 BUY PN NAS1801-08-5 PRE VSB A2-254-25-047 PRE VSB A2-254-25-069 PRE VSB A2-254-25-100 used on 001A, 001B, 001C, 001D, 001E, 001F, 001G, 001H, 001J, 001K, 001L, 001M, 001N		008
-220B	NAS1096-2-5		. . SCREW POST VSB A2-254-25-154 BUY PN NAS1801-08-5 POST VSB A2-254-25-047 POST VSB A2-254-25-069 POST VSB A2-254-25-100 used on 001C, 001G, 001H, 001L		004
221A	NAS1096-2-5		. . SCREW BUY PN NAS1801-08-5 used on 001A, 001C, 001D, 001E, 001J, 001K, 001M		002

- ITEM NOT ILLUSTRATED

FIG. ITEM	PART NUMBER	AIRLINE STOCK NUMBER	NOMENCLATURE 1234567	EFF CODE	UNITS PER ASSY
-225A	NAS1801-08-6		. . SCREW POST VSB A2-254-25-154 POST VSB A2-254-25-047 POST VSB A2-254-25-069 POST VSB A2-254-25-100 used on 001C, 001G, 001H, 001L		004
230A	NAS1149CN832R		. . WASHER used on 001A, 001B, 001C, 001D, 001E, 001F, 001G, 001H, 001J, 001K, 001L, 001M, 001N		015
231A	NAS1149CN832R		. . WASHER used on 001A, 001C, 001D, 001E, 001J, 001K, 001M		002
233A	NAS1149CN832R		. . WASHER POST SB 25-1289 used on 001B		009
240A	A225400451-202		. . STUD used on 001A, 001B, 001C, 001D, 001E, 001F, 001G, 001H, 001J, 001K, 001L, 001M, 001N		002
250A	A225401222-502		. . POST ASSY used on 001A, 001C, 001F, 001M		001
-250B	A225401222-536		. . POST ASSY used on 001B		001
-250C	A225401222-500		. . POST ASSY used on 001D, 001E, 001J, 001L, 001N		001
-250D	A225401222-524		. . POST ASSY used on 001G		001
-250E	A225401222-542		. . POST ASSY used on 001H		001

- ITEM NOT ILLUSTRATED

FIG. ITEM	PART NUMBER	AIRLINE STOCK NUMBER	NOMENCLATURE 1234567	EFF CODE	UNITS PER ASSY
-250F	A225401222-506		. . POST ASSY used on 001K		001
260A	NAS514P832-4		. . . SCREW used on 250A, 250B, 250C, 250D, 250E, 250F		004
270A	NAS1068A08		. . . NUT BUY PN MS21075L08 used on 250A, 250B, 250C, 250D, 250E, 250F		004
280A	NAS1096-2-7		. . SCREW BUY PN NAS1801-08-7 used on 001A, 001B, 001C, 001D, 001E, 001F, 001G, 001H, 001J, 001K, 001L, 001M, 001N		007
290A	2634DP437-110		. . CAP used on 001A, 001B, 001C, 001D, 001E, 001F, 001G, 001H, 001J, 001K, 001L, 001M, 001N		005
300A	NAS1096-3-9		. . SCREW BUY PN NAS1801-3-9 used on 001A, 001B, 001C, 001D, 001E, 001F, 001G, 001H, 001J, 001K, 001L, 001M, 001N		001
310A	A2547380206000		. . SUPPORT used on 001A, 001C, 001E, 001J, 001M		001
-310B	A2547380208800		. . SUPPORT used on 001D		001
-310C	A2547380208400		. . SUPPORT used on 001K		001

- ITEM NOT ILLUSTRATED

FIG. ITEM	PART NUMBER	AIRLINE STOCK NUMBER	NOMENCLATURE 1234567	EFF CODE	UNITS PER ASSY
320A	A2547577004800		. . DISPENSER-TOILET SEAT COVER used on 001A, 001F, 001G, 001M A254-75770-048-00		001
-320B	A2547577007400		. . DISPENSER-TOILET SEAT COVER used on 001B		001
-320C	A2547577007600		. . DISPENSER-TOILET SEAT COVER used on 001D		001
330A	NAS1100-08-4		. . SCREW used on 001A, 001B, 001D, 001F, 001G, 001M		002
340A	DCIN140-02-12		. . HANDLE ASSY used on 001B		002
-340B	550-33-300MBB		. . HANDLE ASSY used on 001F, 001G, 001H, 001L, 001N		002
350A	S7224		. . . SCREW-SPECIAL used on 340A, 340B		002
360A	8534		. . . PIN-SECURITY used on 340A, 340B		002
370A	8587		. . . WASHER-SPECIAL used on 340A, 340B		002
380A	A225401236-200		. . ANGLE POST SB 25-1289 used on 001B		001
390A	NAS1096-3-7		. . SCREW POST SB 25-1289 BUY PN NAS1801-3-7 used on 001B		004

- ITEM NOT ILLUSTRATED

FIG. ITEM	PART NUMBER	AIRLINE STOCK NUMBER	NOMENCLATURE 1234567	EFF CODE	UNITS PER ASSY
400A	NAS1096-3-5		. . SCREW POST SB 25-1289 BUY PN NAS1801-3-5 used on 001B		005
410A	A225400208-000		. . DEVICE ASSY-EMERGENCY UNLOCKING,SINGLE DOOR POST SB 25-1316 used on 001B, 001N		001
420A	A225400208-200		. . . HOUSING-EMERGENCY UN-LOCKING DEVICE used on 410A		001
430A	A225400208-204		. . . STRIKE-EMERGENCY UN-LOCKING DEVICE used on 410A		001
440A	A225400208-202		. . . PIVOT-EMERGENCY UN-LOCKING DEVICE used on 410A		001
450A	A225400208-210		. . . PIN used on 410A		001
460A	SM1275-1KNM04		. . . CATCH-SNAP used on 410A		001
470A	A225400208-208		. . . BOLT used on 410A		001
480A	A225400221-202		. . PLATE POST SB 25-1316 used on 001B, 001N		002
490A	NAS514P832-7		. . SCREW POST SB 25-1316 used on 001B, 001N		006

- ITEM NOT ILLUSTRATED

FIG. ITEM	PART NUMBER	AIRLINE STOCK NUMBER	NOMENCLATURE 1234567	EFF CODE	UNITS PER ASSY
500A	NSA5067-08-1		. . NUT POST SB 25-1316 used on 001B, 001N		002

- ITEM NOT ILLUSTRATED

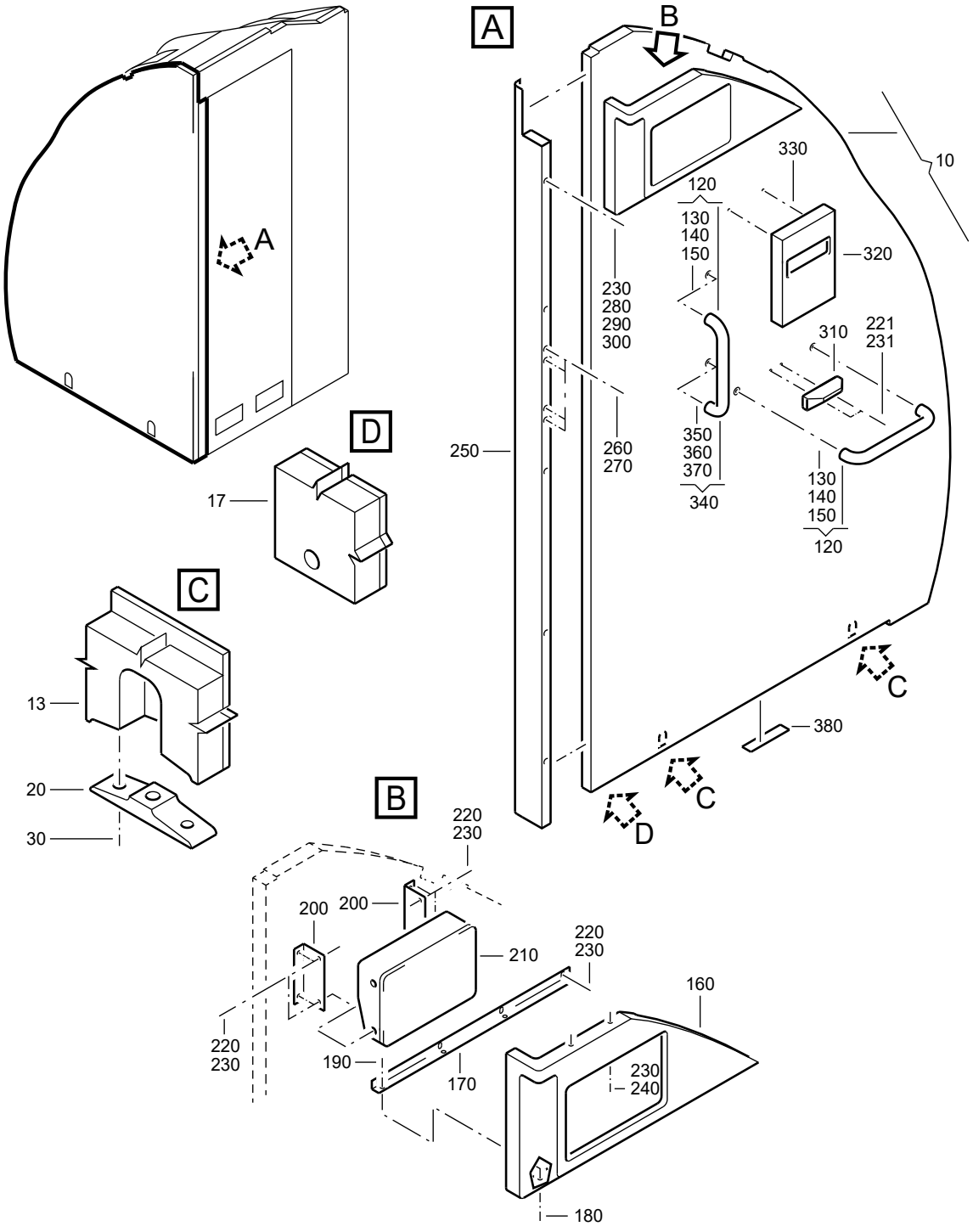

F_PL_254151_06_N_01_00

WALL-SIDE
Figure 06N/EN254151SHEET06N01

FIG. ITEM	PART NUMBER	AIRLINE STOCK NUMBER	NOMENCLATURE 1234567	EFF CODE	UNITS PER ASSY
06N					
-001A	D2549020614065		. WALL-SIDE NP used on 040A (25415101U) SEE 25-41-51-01U FOR NHA		RF
-001B	D2549020613865		. WALL-SIDE NP used on 040B (25415101U) SEE 25-41-51-01U FOR NHA		RF
-001C	D2549020612865		. WALL-SIDE NP used on 040C (25415101U) SEE 25-41-51-01U FOR NHA		RF
-001D	D2549030511065		. WALL-SIDE NP used on 040F (25415101U), 040F (25415101X), 040J(254151410), 040H (25415141A) SEE 25-41-51-01U FOR NHA SEE 25-41-51-01X FOR NHA SEE 25-41-51-410 FOR NHA SEE 25-41-51-41A FOR NHA		RF
-001E	D2549030511265		. WALL-SIDE NP used on 040G (25415101U), 040D (25415101V), 040K (25415141F) SEE 25-41-51-01U FOR NHA SEE 25-41-51-01V FOR NHA SEE 25-41-51-41F FOR NHA		RF
-001F	D2549010602065		. WALL-SIDE NP used on 040H (25415101U), 040D (25415101X), 040F (25415141C) SEE 25-41-51-01U FOR NHA SEE 25-41-51-01X FOR NHA SEE 25-41-51-41C FOR NHA		RF

- ITEM NOT ILLUSTRATED

FIG. ITEM	PART NUMBER	AIRLINE STOCK NUMBER	NOMENCLATURE 1234567	EFF CODE	UNITS PER ASSY
-001G	D2549030511665		. WALL-SIDE NP used on 040J (25415101U), 040G (25415101Y), 040G(25415141B) SEE 25-41-51-01U FOR NHA SEE 25-41-51-01Y FOR NHA SEE 25-41-51-41B FOR NHA		RF
-001H	D2549030510265		. WALL-SIDE NP PRE VSB A2-254-25-054 used on 040K (25415101U), 040C (25415101X), 040F (25415101Y), 040E (25415141C), 040A (25415141F), 040J (25415141H) SEE 25-41-51-01U FOR NHA SEE 25-41-51-01X FOR NHA SEE 25-41-51-01Y FOR NHA SEE 25-41-51-41C FOR NHA SEE 25-41-51-41F FOR NHA SEE 25-41-51-41H FOR NHA		RF
-001J	D2549010514665		. WALL-SIDE NP PRE VSB A2-254-25-080 used on 040H (25415101V), 040G (25415141C), 040E (25415141G), 040G (25415141M) SEE 25-41-51-01V FOR NHA SEE 25-41-51-41C FOR NHA SEE 25-41-51-41G FOR NHA SEE 25-41-51-41M FOR NHA		RF

- ITEM NOT ILLUSTRATED

FIG. ITEM	PART NUMBER	AIRLINE STOCK NUMBER	NOMENCLATURE 1234567		EFF CODE	UNITS PER ASSY
-001K	D2549030509865		. WALL-SIDE PRE VSB A2-254-25-080 used on 040D (25415101W), 040H (25415101Z), 040B (25415141C), 040C (25415141G), 040F (25415141K), 040D(25415141M) SEE 25-41-51-01W FOR NHA SEE 25-41-51-01Z FOR NHA SEE 25-41-51-41C FOR NHA SEE 25-41-51-41G FOR NHA SEE 25-41-51-41K FOR NHA SEE 25-41-51-41M FOR NHA	NP		RF
-001L	D2549020700465		. WALL-SIDE used on 040E (25415101W), 040M (25415101X), 040A (25415101Z), 040A (254151410), 040D (25415141D), 040L (25415141F), 040J (25415141J), 040A (25415141K) SEE 25-41-51-01W FOR NHA SEE 25-41-51-01X FOR NHA SEE 25-41-51-01Z FOR NHA SEE 25-41-51-410 FOR NHA SEE 25-41-51-41D FOR NHA SEE 25-41-51-41F FOR NHA SEE 25-41-51-41J FOR NHA SEE 25-41-51-41K FOR NHA	NP		RF
-001M	D2549020701065		. WALL-SIDE used on 040G (25415101W) SEE 25-41-51-01W FOR NHA	NP		RF
-001N	D2549020707865		. WALL-SIDE used on 040M (254151410) SEE 25-41-51-410 FOR NHA	NP		RF

- ITEM NOT ILLUSTRATED

FIG. ITEM	PART NUMBER	AIRLINE STOCK NUMBER	NOMENCLATURE 1234567		EFF CODE	UNITS PER ASSY
-001P	R22540116800465		. WALL-SIDE POST VSB A2-254-25-054 used on 040M (25415101U), 040Q (25415101X), 040M (25415101Y), 040L (25415141C), 040P (25415141F), 040R (25415141H) SEE 25-41-51-01U FOR NHA SEE 25-41-51-01X FOR NHA SEE 25-41-51-01Y FOR NHA SEE 25-41-51-41C FOR NHA SEE 25-41-51-41F FOR NHA SEE 25-41-51-41H FOR NHA	NP		RF
-001Q	R22540114500265		. WALL-SIDE POST VSB A2-254-25-080 used on 040M (25415101V), 040P (25415141G), 040P (25415141M) SEE 25-41-51-01V FOR NHA SEE 25-41-51-41G FOR NHA SEE 25-41-51-41M FOR NHA	NP		RF
-001R	R22540117200665		. WALL-SIDE POST VSB A2-254-25-080 used on 040P (25415101W), 040L (25415101Z), 040M (25415141C), 040Q (25415141G), 040P (25415141K), 040Q (25415141M) SEE 25-41-51-01W FOR NHA SEE 25-41-51-01Z FOR NHA SEE 25-41-51-41C FOR NHA SEE 25-41-51-41G FOR NHA SEE 25-41-51-41K FOR NHA SEE 25-41-51-41M FOR NHA	NP		RF
010A	A225401233-534		. . WALL ASSY-SIDE,AFT used on 001A			001

- ITEM NOT ILLUSTRATED

FIG. ITEM	PART NUMBER	AIRLINE STOCK NUMBER	NOMENCLATURE 1234567	EFF CODE	UNITS PER ASSY
-010B	A225401233-562		. . WALL ASSY-SIDE,AFT used on 001B		001
-010C	A225401233-516		. . WALL ASSY-SIDE,AFT used on 001C		001
-010D	A225401233-566		. . WALL ASSY-SIDE,AFT used on 001D		001
-010E	A225401233-570		. . WALL ASSY-SIDE,AFT used on 001E		001
-010F	A225401233-572		. . WALL ASSY-SIDE,AFT used on 001F		001
-010G	A225401233-568		. . WALL ASSY-SIDE,AFT used on 001G		001
-010H	A225401233-530		. . WALL ASSY-SIDE,AFT used on 001H, 001P		001
-010J	A225401233-532		. . WALL ASSY-SIDE,AFT used on 001J, 001Q		001
-010K	A225401233-510		. . WALL ASSY-SIDE,AFT used on 001K, 001R		001
-010L	A225401233-574		. . WALL ASSY-SIDE,AFT used on 001L		001
-010M	A225401233-536		. . WALL ASSY-SIDE,AFT used on 001M		001
-010N	A2254012338574		. . WALL ASSY-SIDE,AFT POST SB 25-1314 used on 001N		001

- ITEM NOT ILLUSTRATED

FIG. ITEM	PART NUMBER	AIRLINE STOCK NUMBER	NOMENCLATURE 1234567	EFF CODE	UNITS PER ASSY
013A	A225400231-202		. . . BRACKET BUY PN A225491004-002 used on 010A, 010B, 010C, 010D, 010E, 010F, 010G, 010H, 010J, 010K, 010L, 010M, 010N		002
017A	A225400231-214		. . . BRACKET BUY PN A225491004-232 used on 010A, 010B, 010C, 010D, 010E, 010F, 010G, 010H, 010J, 010K, 010L, 010M, 010N		001
020A	A225400232-208		. . . FITTING used on 010A, 010B, 010C, 010D, 010E, 010F, 010G, 010H, 010J, 010K, 010L, 010M, 010N		002
030A	NAS1102E4-10		. . . SCREW used on 010A, 010B, 010C, 010D, 010E, 010F, 010G, 010H, 010J, 010K, 010L, 010M, 010N		004
-040A	NAS1833C08-370		. . . INSERT USE AS REQUIRED used on 010A, 010B, 010C, 010D, 010E, 010F, 010G, 010H, 010J, 010K, 010L, 010M, 010N		AR
-050A	NSA5054-08		. . . INSERT used on 010A, 010B, 010C, 010D, 010E, 010F, 010G, 010H, 010J, 010K, 010L, 010M, 010N		001
-060A	NAS1835C08		. . . INSERT used on 010A, 010B, 010C, 010D, 010E, 010F, 010G, 010H, 010J, 010K, 010L, 010M, 010N		007

- ITEM NOT ILLUSTRATED

FIG. ITEM	PART NUMBER	AIRLINE STOCK NUMBER	NOMENCLATURE 1234567	EFF CODE	UNITS PER ASSY
-070A	NAS1833C3-370		. . . INSERT used on 010A, 010B, 010C, 010D, 010E, 010F, 010G, 010H, 010J, 010K, 010L, 010M, 010N		023
-080A	NSA5054-5		. . . INSERT used on 010A, 010B, 010C, 010D, 010E, 010F, 010G, 010H, 010J, 010K, 010L, 010M, 010N		012
-090A	NSA5054-3		. . . INSERT used on 010A, 010B, 010C, 010D, 010E, 010F, 010G, 010H, 010J, 010K, 010L, 010M, 010N		001
-100A	NSA5054-4		. . . INSERT used on 010A, 010B, 010C, 010D, 010E, 010F, 010G, 010H, 010J, 010K, 010L, 010M, 010N		008
-110A	NSA935405-01		. . . MOUNT used on 010A, 010B, 010C, 010D, 010E, 010F, 010G, 010H, 010J, 010K, 010L, 010M, 010N		010
120A	550-33-300MBB		. . HANDLE ASSY used on 001A, 001C, 001D, 001G, 001H, 001K, 001L, 001N, 001P, 001R		002
130A	S7224		. . . SCREW-SPECIAL used on 120A		002
140A	8534		. . . PIN-SECURITY used on 120A		002
150A	8587		. . . WASHER-SPECIAL used on 120A		002

- ITEM NOT ILLUSTRATED

FIG. ITEM	PART NUMBER	AIRLINE STOCK NUMBER	NOMENCLATURE 1234567	EFF CODE	UNITS PER ASSY
160A	A225401410-502		. . COVER-OXYGEN CONTAIN-ER ASSY used on 001A, 001B, 001C, 001D, 001E, 001G, 001J, 001K, 001L, 001N, 001Q, 001R		001
-160B	A225401410-500		. . COVER-OXYGEN CONTAIN-ER ASSY used on 001F		001
-160C	A225401410-514		. . COVER-OXYGEN CONTAIN-ER ASSY used on 001H, 001P		001
-160D	A225401410-504		. . COVER-OXYGEN CONTAIN-ER ASSY used on 001M		001
170A	A225400450-204		. . ANGLE used on 001A, 001B, 001C, 001D, 001E, 001F, 001G, 001H, 001J, 001K, 001L, 001M, 001N, 001P, 001Q, 001R		001
180A	NAS1102-08-5		. . SCREW used on 001A, 001B, 001C, 001D, 001E, 001F, 001G, 001H, 001J, 001K, 001L, 001M, 001N, 001P, 001Q, 001R		004
190A	NSA5067-08-1		. . NUT used on 001A, 001B, 001C, 001D, 001E, 001F, 001G, 001H, 001J, 001K, 001L, 001M, 001N, 001P, 001Q, 001R		004

- ITEM NOT ILLUSTRATED

FIG. ITEM	PART NUMBER	AIRLINE STOCK NUMBER	NOMENCLATURE 1234567	EFF CODE	UNITS PER ASSY
200A	A225400450-202		. . ANGLE used on 001A, 001B, 001C, 001D, 001E, 001F, 001G, 001H, 001J, 001K, 001L, 001M, 001N, 001P, 001Q, 001R		002
210A	G2F212-85		. . CONTAINER ASSY-OXYGEN PRE VSB A2-254-25-154 used on 001A, 001B, 001L, 001N		001
-210B	22C150150320004		. . CONTAINER ASSY-OXYGEN PRE VSB A2-254-25-080 used on 001D, 001E, 001G, 001J, 001K		001
-210C	22C150150080004		. . CONTAINER ASSY-OXYGEN used on 001F		001
-210D	E2F212-58		. . CONTAINER ASSY-OXYGEN PRE VSB A2-254-25-054 PRE VSB A2-254-25-100 used on 001H		001
-210E	22C150150090004		. . CONTAINER ASSY-OXYGEN used on 001M		001
-210F	22C220150320003		. . CONTAINER ASSY-OXYGEN used on 001C		001
-210G	22G220150400400		. . CONTAINER ASSY-OXYGEN POST VSB A2-254-25-054 POST VSB A2-254-25-100 used on 001H, 001P		001
-210H	22G150150320400		. . CONTAINER ASSY-OXYGEN POST VSB A2-254-25-080 used on 001Q, 001R		001
-210J	22C22L150320009		. . CONTAINER ASSY-OXYGEN POST VSB A2-254-25-154 used on 001L		001

- ITEM NOT ILLUSTRATED

FIG. ITEM	PART NUMBER	AIRLINE STOCK NUMBER	NOMENCLATURE 1234567	EFF CODE	UNITS PER ASSY
220A	NAS1096-2-5		. . SCREW PRE VSB A2-254-25-154 PRE VSB A2-254-25-054 PRE VSB A2-254-25-080 PRE VSB A2-254-25-100 BUY PN NAS1801-08-5 used on 001A, 001B, 001C, 001D, 001E, 001F, 001G, 001H, 001J, 001K, 001L, 001M, 001N		008
-220B	NAS1096-2-5		. . SCREW POST VSB A2-254-25-154 POST VSB A2-254-25-054 POST VSB A2-254-25-100 BUY PN NAS1801-08-5 used on 001H, 001L, 001P, 001Q, 001R		004
221A	NAS1096-2-7		. . SCREW BUY PN NAS1801-08-7 used on 001B, 001E, 001F, 001J, 001M, 001Q		002
-222A	NAS1801-08-6		. . SCREW POST VSB A2-254-25-154 POST VSB A2-254-25-054 POST VSB A2-254-25-080 POST VSB A2-254-25-100 used on 001H, 001L, 001P, 001Q, 001R		004
230A	NAS1149CN832R		. . WASHER used on 001A, 001B, 001C, 001D, 001E, 001F, 001G, 001H, 001J, 001K, 001L, 001M, 001N, 001P, 001Q, 001R		015
231A	NAS1149CN832R		. . WASHER used on 001B, 001E, 001F, 001J, 001M, 001Q		002

- ITEM NOT ILLUSTRATED

FIG. ITEM	PART NUMBER	AIRLINE STOCK NUMBER	NOMENCLATURE 1234567	EFF CODE	UNITS PER ASSY
240A	A225400451-202		. . STUD used on 001A, 001B, 001C, 001D, 001E, 001F, 001G, 001H, 001J, 001K, 001L, 001M, 001N, 001P, 001Q, 001R		002
250A	A225401222-522		. . POST ASSY used on 001A		001
-250B	A225401222-532		. . POST ASSY used on 001B		001
-250C	A225401222-502		. . POST ASSY used on 001C		001
-250D	A225401222-500		. . POST ASSY used on 001D, 001E, 001J, 001K, 001L, 001N, 001Q, 001R		001
-250E	A225401222-508		. . POST ASSY used on 001F		001
-250F	A225401222-544		. . POST ASSY used on 001G		001
-250G	A225401222-538		. . POST ASSY used on 001H, 001P		001
-250H	A225401222-506		. . POST ASSY used on 001M		001
260A	NAS514P832-4		. . . SCREW used on 250A, 250B, 250C, 250D, 250E, 250F, 250G,250H		004
270A	NAS1068A08		. . . NUT BUY PN MS21075L08 used on 250A, 250B, 250C, 250D, 250E, 250F, 250G,250H		004

- ITEM NOT ILLUSTRATED

FIG. ITEM	PART NUMBER	AIRLINE STOCK NUMBER	NOMENCLATURE 1234567	EFF CODE	UNITS PER ASSY
280A	NAS1096-2-7		. . SCREW BUY PN NAS1801-08-7 used on 001A, 001B, 001C, 001D, 001E, 001F, 001G, 001H, 001J, 001K, 001L, 001M, 001N, 001P, 001Q, 001R		007
290A	2634DP437-110		. . CAP used on 001A, 001B, 001C, 001D, 001E, 001F, 001G, 001H, 001J, 001K, 001L, 001M, 001N, 001P, 001Q, 001R		005
300A	NAS1096-3-9		. . SCREW BUY PN NAS1801-3-9 used on 001A, 001B, 001C, 001D, 001E, 001F, 001G, 001H, 001J, 001K, 001L, 001M, 001N, 001P, 001Q, 001R		001
310A	A2547380206600		. . SUPPORT used on 001B		001
310B	A2547380206000		. . SUPPORT used on 001E, 001J, 001Q		001
-310C	A2547380205200		. . SUPPORT used on 001F		001
-310D	A2547380208400		. . SUPPORT used on 001M		001
320A	A2547577004800		. . DISPENSER-TOILET SEAT COVER used on 001C, 001D, 001E, 001J, 001K, 001N, 001Q, 001R A254-75770-048-00		001

- ITEM NOT ILLUSTRATED

FIG. ITEM	PART NUMBER	AIRLINE STOCK NUMBER	NOMENCLATURE 1234567	EFF CODE	UNITS PER ASSY
330A	NAS1100-08-4		. . SCREW used on 001C, 001D, 001E, 001J, 001K, 001N, 001Q, 001R		002
340A	550MBB1		. . HANDLE ASSY used on 001B, 001E, 001F, 001J, 001M, 001Q		001
350A	S7224		. . . SCREW-SPECIAL used on 340A		002
360A	8534		. . . PIN-SECURITY used on 340A		002
370A	8587		. . . WASHER-SPECIAL used on 340A		002
380A	A225400231-362		. . STRIP-REINFORCING POST SB 25-1314 REQUIRED LENGTH 24MM used on 001N		001

- ITEM NOT ILLUSTRATED

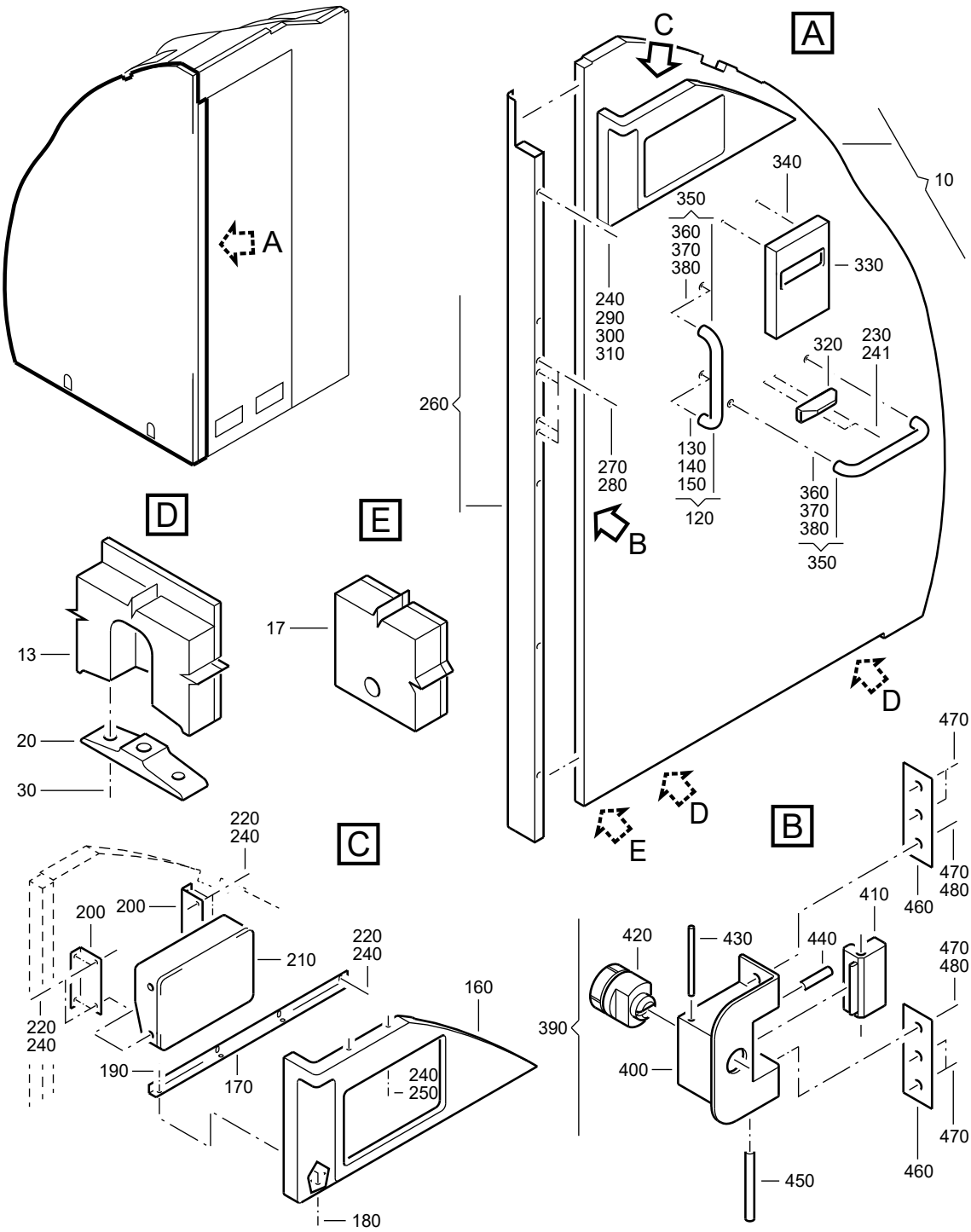

F_PL_254151_06_P_01_00

WALL-SIDE
Figure 06P/EN254151SHEET06P01

FIG. ITEM	PART NUMBER	AIRLINE STOCK NUMBER	NOMENCLATURE 1234567		EFF CODE	UNITS PER ASSY
06P						
-001A	D2549010602465		. WALL-SIDE used on 040J (25415101W) SEE 25-41-51-01W FOR NHA	NP		RF
-001B	D2549020704265		. WALL-SIDE PRE VSB A2-254-25-042 used on 040K (25415101W), 040H (25415101X) SEE 25-41-51-01W FOR NHA SEE 25-41-51-01X FOR NHA	NP		RF
-001C	D2549030514265		. WALL-SIDE used on 040B (25415101X), 040B (25415101Z), 040C(25415141D) SEE 25-41-51-01X FOR NHA SEE 25-41-51-01Z FOR NHA SEE 25-41-51-41D FOR NHA	NP		RF
-001D	D2549030513065		. WALL-SIDE used on 040G (25415101V) SEE 25-41-51-01V FOR NHA	NP		RF
-001E	D2549030512465		. WALL-SIDE used on 040E (25415101X) SEE 25-41-51-01X FOR NHA	NP		RF

- ITEM NOT ILLUSTRATED

FIG. ITEM	PART NUMBER	AIRLINE STOCK NUMBER	NOMENCLATURE 1234567		EFF CODE	UNITS PER ASSY
-001F	D2549020703465		. WALL-SIDE PRE VSB A2-254-25-042 PRE VSB A2-254-25-054 used on 040G (25415101X), 040B (254151410), 040D (25415141C), 040J (25415141F), 040M (25415141H), 040D (25415141K), 040F (25415141N) SEE 25-41-51-01X FOR NHA SEE 25-41-51-410 FOR NHA SEE 25-41-51-41C FOR NHA SEE 25-41-51-41F FOR NHA SEE 25-41-51-41H FOR NHA SEE 25-41-51-41K FOR NHA SEE 25-41-51-41N FOR NHA	NP		RF
-001G	D2549010601665		. WALL-SIDE used on 040J (25415101X), 040K (25415141D) SEE 25-41-51-01X FOR NHA SEE 25-41-51-41D FOR NHA	NP		RF
-001H	D2549010602665		. WALL-SIDE used on 040L (25415101X) SEE 25-41-51-01X FOR NHA	NP		RF
-001J	D2549030514665		. WALL-SIDE used on 040A (25415101Y), 040M (25415141G), 040K (25415141M) SEE 25-41-51-01Y FOR NHA SEE 25-41-51-41G FOR NHA SEE 25-41-51-41M FOR NHA	NP		RF

- ITEM NOT ILLUSTRATED

FIG. ITEM	PART NUMBER	AIRLINE STOCK NUMBER	NOMENCLATURE 1234567		EFF CODE	UNITS PER ASSY
-001K	D2549030513865		. WALL-SIDE used on 040B (25415101Y), 040H (25415141B), 040J (25415141D), 040H (25415141G), 040F (25415141H), 040F(25415141M) SEE 25-41-51-01Y FOR NHA SEE 25-41-51-41B FOR NHA SEE 25-41-51-41D FOR NHA SEE 25-41-51-41G FOR NHA SEE 25-41-51-41H FOR NHA SEE 25-41-51-41M FOR NHA	NP		RF
-001L	D2549020702665		. WALL-SIDE used on 040H (25415101Y), 040A (25415141G) SEE 25-41-51-01Y FOR NHA SEE 25-41-51-41G FOR NHA	NP		RF
-001M	D2549020610665		. WALL-SIDE used on 040F (25415101N) SEE 25-41-51-01N FOR NHA	NP		RF
-001N	D2549010606265		. WALL-SIDE used on 040F (25415141G) SEE 25-41-51-41G FOR NHA	NP		RF
-001P	D2547160005665		. WALL-SIDE POST SB 25-1574 used on 040N (25415141G) SEE 25-41-51-41G FOR NHA	NP		RF
-001Q	R22540114200065		. WALL-SIDE POST VSB A2-254-25-042 used on 040N (25415101W), 040N (25415101X) SEE 25-41-51-01W FOR NHA SEE 25-41-51-01X FOR NHA	NP		RF

- ITEM NOT ILLUSTRATED

FIG. ITEM	PART NUMBER	AIRLINE STOCK NUMBER	NOMENCLATURE 1234567	EFF CODE	UNITS PER ASSY
-001R	R22540115200065		. WALL-SIDE NP PRE VSB A2-254-25-130 POST VSB A2-254-25-042 used on 040N (25415101X), 040N (25415141), 040K (25415141C), 040N (25415141F), 040P (25415141H), 040M (25415141K), 040M (25415141N) SEE 25-41-51-01X FOR NHA SEE 25-41-51-410 FOR NHA SEE 25-41-51-41C FOR NHA SEE 25-41-51-41F FOR NHA SEE 25-41-51-41H FOR NHA SEE 25-41-51-41K FOR NHA SEE 25-41-51-41N FOR NHA		RF
-001S	R22540119603465		. WALL-SIDE NP POST VSB A2-254-25-054 used on 040N (25415141K), 040P (25415141N) SEE 25-41-51-41K FOR NHA SEE 25-41-51-41N FOR NHA		RF
-001T	R22540119604665		. WALL-SIDE NP POST VSB A2-254-25-130 used on 040R (254151410), 040Q (25415141K), 040Q (25415141N) SEE 25-41-51-410 FOR NHA SEE 25-41-51-41K FOR NHA SEE 25-41-51-41N FOR NHA		RF
010A	A225401233-518		. . WALL ASSY-SIDE,AFT used on 001A		001
-010B	A225401233-578		. . WALL ASSY-SIDE,AFT used on 001B, 001Q		001
-010C	A225401233-576		. . WALL ASSY-SIDE,AFT used on 001C		001

- ITEM NOT ILLUSTRATED

FIG. ITEM	PART NUMBER	AIRLINE STOCK NUMBER	NOMENCLATURE 1234567	EFF CODE	UNITS PER ASSY
-010D	A225401233-582		. . WALL ASSY-SIDE,AFT used on 001D		001
-010E	A225401233-524		. . WALL ASSY-SIDE,AFT used on 001E		001
-010F	A225401233-584		. . WALL ASSY-SIDE,AFT PRE VSB A2-254-25-130 used on 001F, 001R, 001S		001
-010G	A225401233-512		. . WALL ASSY-SIDE,AFT used on 001G, 001N		001
-010H	A225401233-586		. . WALL ASSY-SIDE,AFT used on 001H		001
-010J	A225401233-590		. . WALL ASSY-SIDE,AFT used on 001J		001
-010K	A225401233-588		. . WALL ASSY-SIDE,AFT used on 001K		001
-010L	A225401233-592		. . WALL ASSY-SIDE,AFT used on 001L		001
-010M	A225401231-658		. . WALL ASSY-SIDE,AFT used on 001M		001
-010N	A225401233-652		. . WALL ASSY-SIDE,AFT used on 001P		001
-010P	A225401233-664		. . WALL ASSY-SIDE,AFT POST VSB A2-254-25-130 used on 001T		001
013A	A225400231-202		. . . BRACKET BUY PN A225491004-002 used on 010A, 010B, 010C, 010D, 010E, 010F, 010G, 010H, 010J, 010K, 010L, 010M, 010N, 010P		002

- ITEM NOT ILLUSTRATED

FIG. ITEM	PART NUMBER	AIRLINE STOCK NUMBER	NOMENCLATURE 1234567	EFF CODE	UNITS PER ASSY
017A	A225400231-214		. . . BRACKET BUY PN A225491004-232 used on 010A, 010B, 010C, 010D, 010E, 010F, 010G, 010H, 010J, 010K, 010L, 010M, 010N, 010P		001
020A	A225400232-208		. . . FITTING used on 010A, 010B, 010C, 010D, 010E, 010F, 010G, 010H, 010J, 010K, 010L, 010M, 010N, 010P		002
030A	NAS1102E4-10		. . . SCREW used on 010A, 010B, 010C, 010D, 010E, 010F, 010G, 010H, 010J, 010K, 010L, 010M, 010N, 010P		004
-040A	NAS1833C08-370		. . . INSERT used on 010A, 010B, 010C, 010D, 010E, 010F, 010G, 010H, 010J, 010K, 010L, 010M, 010N, 010P		080
-050A	NSA5054-08		. . . INSERT used on 010A, 010B, 010C, 010D, 010E, 010F, 010G, 010H, 010J, 010K, 010L, 010M, 010N, 010P		001
-060A	NAS1835C08		. . . INSERT used on 010A, 010B, 010C, 010D, 010E, 010F, 010G, 010H, 010J, 010K, 010L, 010M, 010N, 010P		007

- ITEM NOT ILLUSTRATED

FIG. ITEM	PART NUMBER	AIRLINE STOCK NUMBER	NOMENCLATURE 1234567	EFF CODE	UNITS PER ASSY
-070A	NAS1833C3-370		. . . INSERT used on 010A, 010B, 010C, 010D, 010E, 010F, 010G, 010H, 010J, 010K, 010L, 010M, 010N, 010P		023
-080A	NSA5054-5		. . . INSERT used on 010A, 010B, 010C, 010D, 010E, 010F, 010G, 010H, 010J, 010K, 010L, 010M, 010N, 010P		012
-090A	NSA5054-3		. . . INSERT used on 010A, 010B, 010C, 010D, 010E, 010F, 010G, 010H, 010J, 010K, 010L, 010M, 010N, 010P		001
-100A	NSA5054-4		. . . INSERT used on 010A, 010B, 010C, 010D, 010E, 010F, 010G, 010H, 010J, 010K, 010L, 010M, 010N, 010P		008
-110A	NSA935405-01		. . . MOUNT used on 010A, 010B, 010C, 010D, 010E, 010F, 010G, 010H, 010J, 010K, 010L, 010M, 010N, 010P		010
120A	550MBB1		. . HANDLE ASSY PRE VSB A2-254-25-130 used on 001A, 001B, 001D, 001E, 001F, 001G, 001J, 001K, 001L, 001M, 001N, 001P, 001Q, 001R, 001S		001
130A	S7224		. . . SCREW-SPECIAL used on 120A		002

- ITEM NOT ILLUSTRATED

FIG. ITEM	PART NUMBER	AIRLINE STOCK NUMBER	NOMENCLATURE 1234567	EFF CODE	UNITS PER ASSY
140A	8534		. . . PIN-SECURITY used on 120A		002
150A	8587		. . . WASHER-SPECIAL used on 120A		002
160A	A225401410-502		. . COVER-OXYGEN CONTAIN-ER ASSY PRE VSB A2-254-25-130 used on 001A, 001B, 001C, 001E, 001F, 001G, 001J, 001M, 001N, 001P, 001Q, 001R, 001S		001
-160B	A225401410-504		. . COVER-OXYGEN CONTAIN-ER ASSY used on 001D, 001K		001
-160C	A225401410-508		. . COVER-OXYGEN CONTAIN-ER ASSY used on 001H, 001L		001
-160D	A225401410-518		. . COVER-OXYGEN CONTAIN-ER ASSY POST VSB A2-254-25-130 used on 001T		001
170A	A225400450-204		. . ANGLE used on 001A, 001B, 001C, 001D, 001E, 001F, 001G, 001H, 001J, 001K, 001L, 001M, 001N, 001P, 001Q, 001R, 001S, 001T		001
180A	NAS1102-08-5		. . SCREW used on 001A, 001B, 001C, 001D, 001E, 001F, 001G, 001H, 001J, 001K, 001L, 001M, 001N, 001P, 001Q, 001R, 001S, 001T		004

- ITEM NOT ILLUSTRATED

FIG. ITEM	PART NUMBER	AIRLINE STOCK NUMBER	NOMENCLATURE 1234567	EFF CODE	UNITS PER ASSY
190A	NSA5067-08-1		. . NUT used on 001A, 001B, 001C, 001D, 001E, 001F, 001G, 001H, 001J, 001K, 001L, 001M, 001N, 001P, 001Q, 001R, 001S, 001T		004
200A	A225400450-202		. . ANGLE used on 001A, 001B, 001C, 001D, 001E, 001F, 001G, 001H, 001J, 001K, 001L, 001M, 001N, 001P, 001Q, 001R, 001S, 001T		002
210A	22C150150320004		. . CONTAINER ASSY-OXYGEN PRE VSB A2-254-25-042 used on 001A, 001B, 001C, 001E, 001G, 001N, 001P		001
-210B	G2F212-51		. . CONTAINER ASSY-OXYGEN PRE VSB A2-254-25-046 used on 001D		001
-210C	22C150150090004		. . CONTAINER ASSY-OXYGEN used on 001K		001
-210D	G2F212-85		. . CONTAINER ASSY-OXYGEN PRE VSB A2-254-25-042 PRE VSB A2-254-25-054 used on 001F, 001J, 001M		001
-210E	G2F212-18		. . CONTAINER ASSY-OXYGEN used on 001H, 001L		001
-210F	22G220150320400		. . CONTAINER ASSY-OXYGEN PRE VSB A2-254-25-130 POST VSB A2-254-25-042 used on 001Q, 001R		001
-210G	22G150150320400		. . CONTAINER ASSY-OXYGEN POST VSB A2-254-25-054 used on 001S		001

- ITEM NOT ILLUSTRATED

FIG. ITEM	PART NUMBER	AIRLINE STOCK NUMBER	NOMENCLATURE 1234567	EFF CODE	UNITS PER ASSY
-210H	22G150150460400		. . CONTAINER ASSY-OXYGEN POST VSB A2-254-25-046 used on 001D		001
-210J	22G220150460400		. . CONTAINER ASSY-OXYGEN POST VSB A2-254-25-130 used on 001T		001
220A	NAS1096-2-5		. . SCREW PRE VSB A2-254-25-046 PRE VSB A2-254-25-054 BUY PN NAS1801-08-5 used on 001A, 001B, 001C, 001D, 001E, 001F, 001G, 001H, 001J, 001K, 001L, 001M, 001N, 001P		012
-220B	NAS1096-2-5		. . SCREW POST VSB A2-254-25-046 POST VSB A2-254-25-054 used on 001D, 001Q, 001R, 001S, 001T		008
-225A	NAS1801-08-6		. . SCREW PRE VSB A2-254-25-130 POST VSB A2-254-25-046 POST VSB A2-254-25-054 used on 001D, 001Q, 001R, 001S		004
-225B	NAS1801-08-5		. . SCREW POST VSB A2-254-25-130 used on 001T		004
230A	NAS1096-2-6		. . SCREW BUY PN NAS1801-08-6 used on 001A		002

- ITEM NOT ILLUSTRATED

FIG. ITEM	PART NUMBER	AIRLINE STOCK NUMBER	NOMENCLATURE 1234567	EFF CODE	UNITS PER ASSY
-230B	NAS1096-2-7		. . SCREW BUY PN NAS1801-08-7 PRE VSB A2-254-25-130 used on 001B, 001D, 001E, 001F, 001G, 001J, 001K, 001L, 001Q, 001R, 001S		002
240A	NAS1149CN832R		. . WASHER used on 001A, 001B, 001C, 001D, 001E, 001F, 001G, 001H, 001J, 001K, 001L, 001M, 001N, 001P, 001S		019
-240B	NAS1149CN832R		. . WASHER used on 001Q, 001R, 001T		015
241A	NAS1149CN832R		. . WASHER PRE VSB A2-254-25-130 used on 001A, 001B, 001D, 001E, 001F, 001G, 001J, 001K, 001L, 001Q, 001R, 001S		002
-245A	AN960C8		. . WASHER used on 001Q, 001R, 001T		004
250A	A225400451-202		. . STUD used on 001A, 001B, 001C, 001D, 001E, 001F, 001G, 001H, 001J, 001K, 001L, 001M, 001N, 001P, 001Q, 001R, 001S, 001T		002
260A	A225401222-502		. . POST ASSY PRE VSB A2-254-25-130 used on 001A, 001C, 001F, 001H, 001M, 001R, 001S		001
-260B	A225401222-500		. . POST ASSY used on 001B, 001E, 001G, 001J, 001L, 001N, 001P, 001Q		001

- ITEM NOT ILLUSTRATED

FIG. ITEM	PART NUMBER	AIRLINE STOCK NUMBER	NOMENCLATURE 1234567	EFF CODE	UNITS PER ASSY
-260C	A225401222-528		. . POST ASSY used on 001D		001
-260D	A225401222-506		. . POST ASSY used on 001K		001
-260E	A225401222-568		. . POST ASSY POST VSB A2-254-25-130 used on 001T		001
270A	NAS514P832-4		. . . SCREW used on 260A, 260B, 260C, 260D, 260E		004
280A	NAS1068A08		. . . NUT BUY PN MS21075L08 used on 260A, 260B, 260C, 260D, 260E		004
290A	NAS1096-2-7		. . SCREW BUY PN NAS1801-08-7 used on 001A, 001B, 001C, 001D, 001E, 001F, 001G, 001H, 001J, 001K, 001L, 001M, 001N, 001P, 001Q, 001R, 001S, 001T		005
300A	2634DP437-110		. . CAP used on 001A, 001B, 001C, 001D, 001E, 001F, 001G, 001H, 001J, 001K, 001L, 001M, 001N, 001P, 001Q, 001R, 001S, 001T		005
310A	NAS1096-3-9		. . SCREW BUY PN NAS1801-3-9 used on 001A, 001B, 001C, 001D, 001E, 001F, 001G, 001H, 001J, 001K, 001L, 001M, 001N, 001P, 001Q, 001R, 001S, 001T		005

- ITEM NOT ILLUSTRATED

FIG. ITEM	PART NUMBER	AIRLINE STOCK NUMBER	NOMENCLATURE 1234567	EFF CODE	UNITS PER ASSY
320A	A2547380206000		. . SUPPORT PRE VSB A2-254-25-130 used on 001A, 001B, 001E, 001F, 001G, 001J, 001N, 001P, 001Q, 001R, 001S		001
-320B	A2547380208400		. . SUPPORT used on 001D, 001K		001
-320C	A2547380205800		. . SUPPORT used on 001L		001
330A	A2547577004800		. . DISPENSER-TOILET SEAT COVER PRE VSB A2-254-25-130 used on 001B, 001C, 001F, 001M, 001Q, 001R, 001S A254-75770-048-00		001
-330B	A2547577007000		. . DISPENSER-TOILET SEAT COVER used on 001D, 001K		001
-330C	A2547577007800		. . DISPENSER-TOILET SEAT COVER used on 001H		001
-330D	A2547577008200		. . DISPENSER-TOILET SEAT COVER POST VSB A2-254-25-130 used on 001T A254-75770-082-00		001
340A	NAS1100-08-4		. . SCREW used on 001B, 001C, 001D, 001F, 001H, 001K, 001M, 001Q, 001R, 001S, 001T		002
350A	550-33-300MBB		. . HANDLE ASSY used on 001C, 001H		002

- ITEM NOT ILLUSTRATED

FIG. ITEM	PART NUMBER	AIRLINE STOCK NUMBER	NOMENCLATURE 1234567	EFF CODE	UNITS PER ASSY
-350B	A2-254-0011-04		. . HANDLE ASSY POST VSB A2-254-25-130 used on 001T		002
360A	S7224		. . . SCREW-SPECIAL used on 350A		002
370A	8534		. . . PIN-SECURITY used on 350A		002
380A	8587		. . . WASHER-SPECIAL used on 350A		002
-385A	A225400233-200		. . BUSHING POST VSB A2-254-25-130 used on 001T		003
390A	A225400208-000		. . DEVICE ASSY-EMERGENCY UNLOCKING,SINGLE DOOR POST SB 25-1316 used on 001N		001
400A	A225400208-200		. . . HOUSING-EMERGENCY UN-LOCKING DEVICE used on 390A		001
410A	A225400208-204		. . . STRIKE-EMERGENCY UN-LOCKING DEVICE used on 390A		001
420A	A225400208-202		. . . PIVOT-EMERGENCY UN-LOCKING DEVICE used on 390A		001
430A	A225400208-210		. . . PIN used on 390A		001
440A	SM1275-1KNM04		. . . CATCH-SNAP used on 390A		001

- ITEM NOT ILLUSTRATED

FIG. ITEM	PART NUMBER	AIRLINE STOCK NUMBER	NOMENCLATURE 1234567	EFF CODE	UNITS PER ASSY
450A	A225400208-208		. . . BOLT used on 390A		001
460A	A225400221-202		. . PLATE POST SB 25-1316 used on 001N		002
470A	NAS514P832-7		. . SCREW POST SB 25-1316 used on 001N		006
480A	NSA5067-08-1		. . NUT POST SB 25-1316 used on 001N		002
-490A	A225400216-314		. . STRIP-KICK POST VSB A2-254-25-130 used on 001T		001

- ITEM NOT ILLUSTRATED

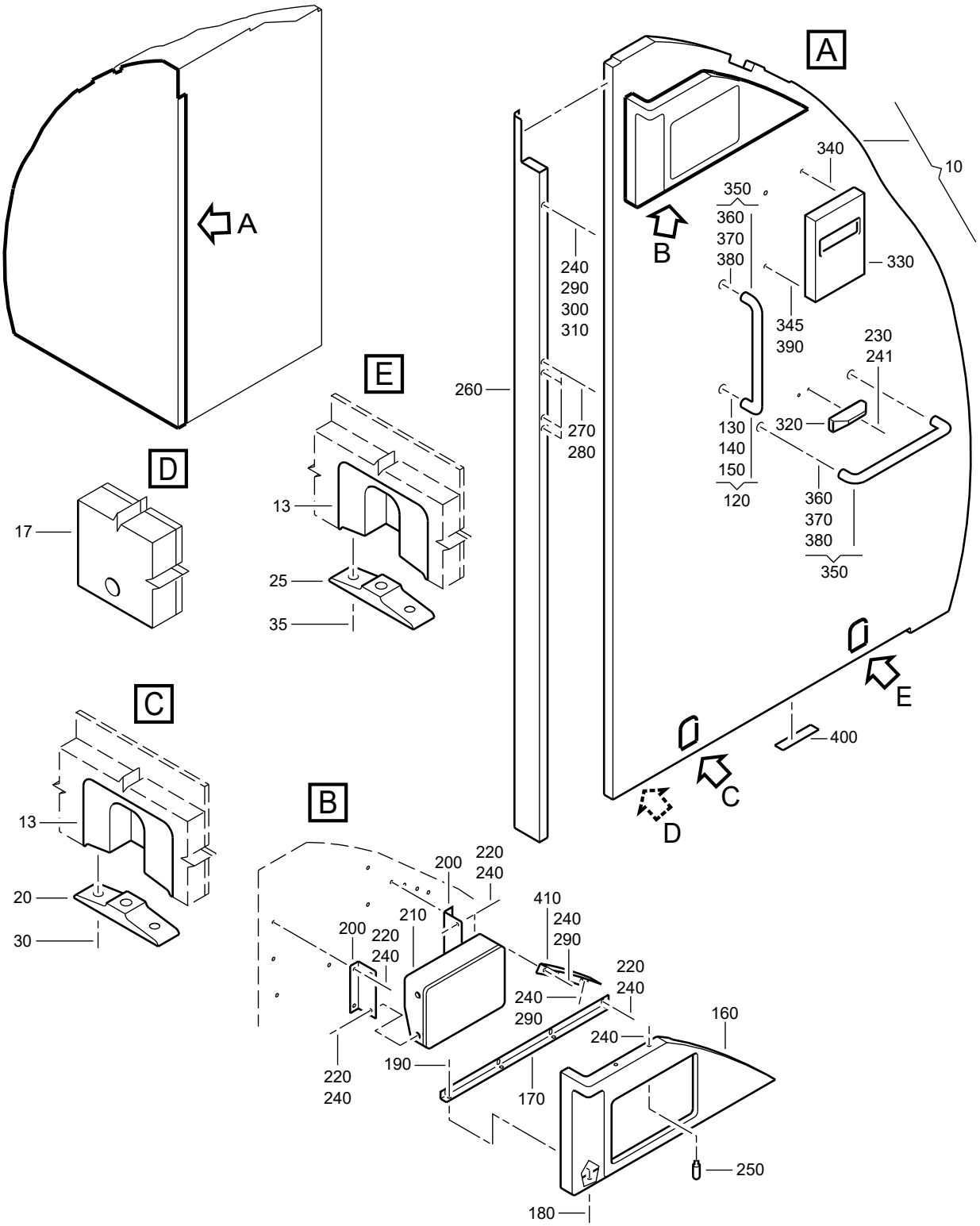

F_PL_254151_06_Q_01_01

WALL-SIDE
Figure 06Q/EN254151SHEET06Q01

FIG. ITEM	PART NUMBER	AIRLINE STOCK NUMBER	NOMENCLATURE 1234567		EFF CODE	UNITS PER ASSY
06Q						
-001A	D2549020702265		. WALL-SIDE used on 040J (25415101Y) SEE 25-41-51-01Y FOR NHA	NP		RF
-001B	D2549010600865		. WALL-SIDE used on 040K (25415101Y) SEE 25-41-51-01Y FOR NHA	NP		RF
-001C	D2549030601465		. WALL-SIDE used on 040E (25415101Z), 040K (25415141B), 040E(25415141D), 040B (25415141G), 040L (25415141M) SEE 25-41-51-01Z FOR NHA SEE 25-41-51-41B FOR NHA SEE 25-41-51-41D FOR NHA SEE 25-41-51-41G FOR NHA SEE 25-41-51-41M FOR NHA	NP		RF
-001D	D2549020705065		. WALL-SIDE PRE VSB A2-254-25-054 used on 040F (25415101Z) SEE 25-41-51-01Z FOR NHA	NP		RF
-001E	D2549030510465		. WALL-SIDE used on 040G (25415101Z) SEE 25-41-51-01Z FOR NHA	NP		RF
-001F	D2549020707265		. WALL-SIDE used on 040C (254151410), 040G (25415141F), 040L (25415141H) SEE 25-41-51-410 FOR NHA SEE 25-41-51-41F FOR NHA SEE 25-41-51-41H FOR NHA	NP		RF

- ITEM NOT ILLUSTRATED

FIG. ITEM	PART NUMBER	AIRLINE STOCK NUMBER	NOMENCLATURE 1234567	EFF CODE	UNITS PER ASSY
-001G	D2549010603665		. WALL-SIDE NP used on 040F (254151410), 040E (25415141A), 040D(25415141L) SEE 25-41-51-410 FOR NHA SEE 25-41-51-41A FOR NHA SEE 25-41-51-41L FOR NHA		RF
-001H	D2549020710065		. WALL-SIDE NP used on 040B (25415141A) SEE 25-41-51-41A FOR NHA		RF
-001J	D2549020710865		. WALL-SIDE NP used on 040C (25415141A), 040L (25415141K) SEE 25-41-51-41A FOR NHA SEE 25-41-51-41K FOR NHA		RF
-001K	D2549020713465		. WALL-SIDE NP used on 040C (25415141F) SEE 25-41-51-41F FOR NHA		RF
-001L	D2549020708465		. WALL-SIDE NP used on 040D (25415141F), 040B (25415141H), 040M(25415142B) SEE 25-41-51-41F FOR NHA SEE 25-41-51-41H FOR NHA SEE 25-41-51-42B FOR NHA		RF
-001M	D2549020708865		. WALL-SIDE NP used on 040E (25415141F) SEE 25-41-51-41F FOR NHA		RF
-001N	R22540119500065		. WALL-SIDE NP POST VSB A2-254-25-054 used on 040K (25415101Z) SEE 25-41-51-01Z FOR NHA		RF
010A	A225401233-596		. . WALL ASSY-SIDE,AFT used on 001A		001

- ITEM NOT ILLUSTRATED

FIG. ITEM	PART NUMBER	AIRLINE STOCK NUMBER	NOMENCLATURE 1234567	EFF CODE	UNITS PER ASSY
-010B	A225401233-594		. . WALL ASSY-SIDE,AFT used on 001B		001
-010C	A2254012338600		. . WALL ASSY-SIDE,AFT POST SB 25-1314 used on 001C		001
-010D	A225401233-598		. . WALL ASSY-SIDE,AFT used on 001D, 001N		001
-010E	A225401233-546		. . WALL ASSY-SIDE,AFT used on 001E		001
-010F	A225401233-602		. . WALL ASSY-SIDE,AFT used on 001F		001
-010G	A225401233-604		. . WALL ASSY-SIDE,AFT used on 001G		001
-010H	A225401233-608		. . WALL ASSY-SIDE,AFT used on 001H		001
-010J	A225401233-614		. . WALL ASSY-SIDE,AFT used on 001J		001
-010K	A225401233-582		. . WALL ASSY-SIDE,AFT used on 001K		001
-010L	A225411230-556		. . WALL ASSY-SIDE,AFT POST SB 25-1640 used on 001L		001
-010M	A2254012338616		. . WALL ASSY-SIDE,AFT POST SB 25-1314 used on 001M		001
013A	A225400231-202		. . . BRACKET BUY PN A225491004-002 used on 010A, 010B, 010C, 010D, 010E, 010F, 010G, 010H, 010J, 010K, 010M		002

- ITEM NOT ILLUSTRATED

FIG. ITEM	PART NUMBER	AIRLINE STOCK NUMBER	NOMENCLATURE 1234567	EFF CODE	UNITS PER ASSY
017A	A225400231-214		. . . BRACKET BUY PN A225491004-232 used on 010A, 010B, 010C, 010D, 010E, 010F, 010G, 010H, 010J, 010K, 010M		001
020A	A225400232-208		. . . FITTING used on 010A, 010B, 010C, 010D, 010E, 010F, 010G, 010H, 010J, 010K, 010L, 010M		001
025A	A225400232-208		. . . FITTING used on 010A, 010B, 010C, 010D, 010E, 010F, 010G, 010H, 010J, 010K, 010M		001
-025B	A225400232-216		. . . FITTING used on 010L		001
030A	NAS1102E4-10		. . . SCREW used on 010A, 010B, 010C, 010D, 010E, 010F, 010G, 010H, 010J, 010K, 010M		002
-030B	ABS0704-6-50		. . . SCREW used on 010L		002
035A	NAS1102E4-10		. . . SCREW used on 010A, 010B, 010C, 010D, 010E, 010F, 010G, 010H, 010J, 010K, 010M		002
-035B	ABS0705-6-50		. . . SCREW used on 010L		002

- ITEM NOT ILLUSTRATED

FIG. ITEM	PART NUMBER	AIRLINE STOCK NUMBER	NOMENCLATURE 1234567	EFF CODE	UNITS PER ASSY
-040A	NAS1833C08-370		. . . INSERT USAGE RANGE FROM 080 TO 084 used on 010A, 010B, 010C, 010D, 010E, 010F, 010G, 010H, 010J, 010K, 010L, 010M		082
-050A	NSA5054-08		. . . INSERT USAGE RANGE FROM 001 TO 003 used on 010A, 010C, 010H, 010J, 010K, 010L		002
-060A	NAS1835C08		. . . INSERT USAGE RANGE FROM 007 TO 008 used on 010A, 010B, 010C, 010D, 010E, 010F, 010G, 010H, 010J, 010K, 010L, 010M		007
-070A	NAS1833C3-370		. . . INSERT USAGE RANGE FROM 023 TO 024 used on 010A, 010B, 010C, 010D, 010E, 010F, 010G, 010H, 010J, 010K, 010L, 010M		023
-080A	NSA5054-5		. . . INSERT used on 010A, 010B, 010C, 010D, 010E, 010F, 010G, 010H, 010J, 010K, 010L, 010M		012
-090A	NSA5054-3		. . . INSERT USAGE RANGE FROM 001 TO 002 used on 010A, 010B, 010C, 010D, 010E, 010F, 010G, 010H, 010J, 010K, 010L, 010M		001

- ITEM NOT ILLUSTRATED

FIG. ITEM	PART NUMBER	AIRLINE STOCK NUMBER	NOMENCLATURE 1234567	EFF CODE	UNITS PER ASSY
-100A	NSA5054-4		. . . INSERT USAGE RANGE FROM 006 TO 008 used on 010A, 010B, 010C, 010D, 010E, 010F, 010G, 010H, 010J, 010K, 010L, 010M		007
-105A	NAS1835C3		. . . INSERT-BLIND FLOATING-NUT used on 010L		003
-110A	NSA935405-01		. . . MOUNT used on 010A, 010B, 010C, 010D, 010E, 010F, 010G, 010H, 010J, 010K, 010L, 010M		010
120A	550MBB1		. . HANDLE ASSY used on 001A		001
130A	S7224		. . . SCREW-SPECIAL used on 120A		002
140A	8534		. . . PIN-SECURITY used on 120A		002
150A	8587		. . . WASHER-SPECIAL used on 120A		002
160A	A225401410-502		. . COVER-OXYGEN CONTAIN-ER ASSY used on 001A, 001B, 001D, 001E, 001F, 001G, 001J, 001K, 001L, 001M, 001N		001
-160B	A225401410-510		. . COVER-OXYGEN CONTAIN-ER ASSY used on 001C		001
-160C	A225401410-520		. . COVER-OXYGEN CONTAIN-ER ASSY used on 001H		001

- ITEM NOT ILLUSTRATED

FIG. ITEM	PART NUMBER	AIRLINE STOCK NUMBER	NOMENCLATURE 1234567	EFF CODE	UNITS PER ASSY
170A	A225400450-204		. . ANGLE used on 001A, 001B, 001C, 001D, 001E, 001F, 001G, 001H, 001J, 001K, 001L, 001M, 001N		001
180A	NAS1102-08-5		. . SCREW used on 001A, 001B, 001C, 001D, 001E, 001F, 001G, 001H, 001J, 001K, 001L, 001M, 001N		004
190A	NSA5067-08-1		. . NUT used on 001A, 001B, 001C, 001D, 001E, 001F, 001G, 001H, 001J, 001K, 001L, 001M, 001N		004
200A	A225400450-202		. . ANGLE used on 001A, 001B, 001C, 001D, 001E, 001F, 001G, 001H, 001J, 001K, 001L, 001M, 001N		002
210A	22C150150320004		. . CONTAINER ASSY-OXYGEN PRE VSB A2-254-25-054 used on 001A, 001D, 001E, 001F, 001G, 001L		001
-210B	G2F212-25		. . CONTAINER ASSY-OXYGEN used on 001B		001
-210C	G2F212-75		. . CONTAINER ASSY-OXYGEN PRE VSB A2-254-25-057 used on 001C		001
-210D	22C220150040004		. . CONTAINER ASSY-OXYGEN used on 001H		001
-210E	G2F212-85		. . CONTAINER ASSY-OXYGEN used on 001J, 001K, 001M		001

- ITEM NOT ILLUSTRATED

FIG. ITEM	PART NUMBER	AIRLINE STOCK NUMBER	NOMENCLATURE 1234567	EFF CODE	UNITS PER ASSY
-210F	22G150150320400		. . CONTAINER ASSY-OXYGEN POST VSB A2-254-25-054 used on 001N		001
-210G	22G150150430400		. . CONTAINER ASSY-OXYGEN POST VSB A2-254-25-057 used on 001C		001
220A	NAS1801-08-5		. . SCREW POST SB 25-1640 PRE VSB A2-254-25-054 PRE VSB A2-254-25-057 used on 001A, 001B, 001C, 001D, 001E, 001F, 001G, 001H, 001J, 001K, 001L, 001M		012
-220B	NAS1801-08-5		. . SCREW POST SB 25-1640 POST VSB A2-254-25-054 POST VSB A2-254-25-057 used on 001C, 001N		008
-222A	NAS1801-08-6		. . SCREW POST VSB A2-254-25-054 POST VSB A2-254-25-057 used on 001C, 001N		004
230A	NAS1096-2-7		. . SCREW BUY PN NAS1801-08-7 used on 001A		002
240A	NAS1149CN832R		. . WASHER used on 001A, 001B, 001C, 001D, 001E, 001F, 001G, 001H, 001J, 001K, 001L, 001M, 001N		027
241A	NAS1149CN832R		. . WASHER used on 001A		002

- ITEM NOT ILLUSTRATED

FIG. ITEM	PART NUMBER	AIRLINE STOCK NUMBER	NOMENCLATURE 1234567	EFF CODE	UNITS PER ASSY
250A	A225400451-202		. . STUD used on 001A, 001B, 001C, 001D, 001E, 001F, 001G, 001H, 001J, 001K, 001L, 001M, 001N		002
260A	A225401222-526		. . POST ASSY used on 001A		001
-260B	A225401222-502		. . POST ASSY used on 001B, 001F		001
-260C	A225401222-530		. . POST ASSY used on 001C		001
-260D	A225401222-544		. . POST ASSY used on 001D, 001N		001
-260E	A225401222-500		. . POST ASSY used on 001E, 001J, 001K, 001L, 001M		001
-260F	A225401222-546		. . POST ASSY used on 001G		001
-260G	A225401222-548		. . POST ASSY used on 001H		001
270A	NAS514P832-4		. . . SCREW used on 260A, 260B, 260C, 260D, 260E, 260F, 260G		004
280A	NAS1068A08		. . . NUT BUY PN MS21075L08 used on 260A, 260B, 260C, 260D, 260E, 260F, 260G		004
290A	NAS1801-08-7		. . SCREW POST SB 25-1640 used on 001A, 001B, 001C, 001D, 001E, 001F, 001G, 001H, 001J, 001K, 001L, 001M, 001N		013

- ITEM NOT ILLUSTRATED

FIG. ITEM	PART NUMBER	AIRLINE STOCK NUMBER	NOMENCLATURE 1234567	EFF CODE	UNITS PER ASSY
300A	2634DP437-110		. . CAP used on 001A, 001B, 001C, 001D, 001E, 001F, 001G, 001H, 001J, 001K, 001L, 001M, 001N		006
310A	NAS1801-3-9		. . SCREW POST SB 25-1640 used on 001A, 001B, 001C, 001D, 001E, 001F, 001G, 001H, 001J, 001K, 001L, 001M, 001N		001
320A	A2547380206000		. . SUPPORT used on 001A		001
330A	A2547577004800		. . DISPENSER-TOILET SEAT COVER used on 001A, 001D, 001E, 001G, 001L, 001M, 001N A254-75770-048-00		001
-330B	155-11114-1A		. . DISPENSER-TOILET SEAT COVER used on 001C		001
-330C	A2547577008000		. . DISPENSER-TOILET SEAT COVER used on 001H		001
340A	NAS1100-08-4		. . SCREW used on 001A, 001D, 001E, 001G, 001H, 001L, 001M, 001N		002
345A	NAS514P832-7		. . SCREW used on 001C		004
350A	550-33-300MBB		. . HANDLE ASSY used on 001B, 001C, 001D, 001E, 001F, 001G, 001H, 001J, 001K, 001L, 001M, 001N		002

- ITEM NOT ILLUSTRATED

FIG. ITEM	PART NUMBER	AIRLINE STOCK NUMBER	NOMENCLATURE 1234567	EFF CODE	UNITS PER ASSY
360A	S7224		. . . SCREW-SPECIAL used on 350A		002
370A	8534		. . . PIN-SECURITY used on 350A		002
380A	8587		. . . WASHER-SPECIAL used on 350A		002
390A	0-123-000700000		. . WASHER used on 001C		004
400A	A225400231-362		. . STRIP-REINFORCING USE AS REQUIRED POST SB 25-1314 used on 001M		AR
410A	A225401236-200		. . ANGLE used on 001A, 001B, 001C, 001D, 001E, 001F, 001G, 001H, 001J, 001K, 001L, 001M, 001N		001

- ITEM NOT ILLUSTRATED

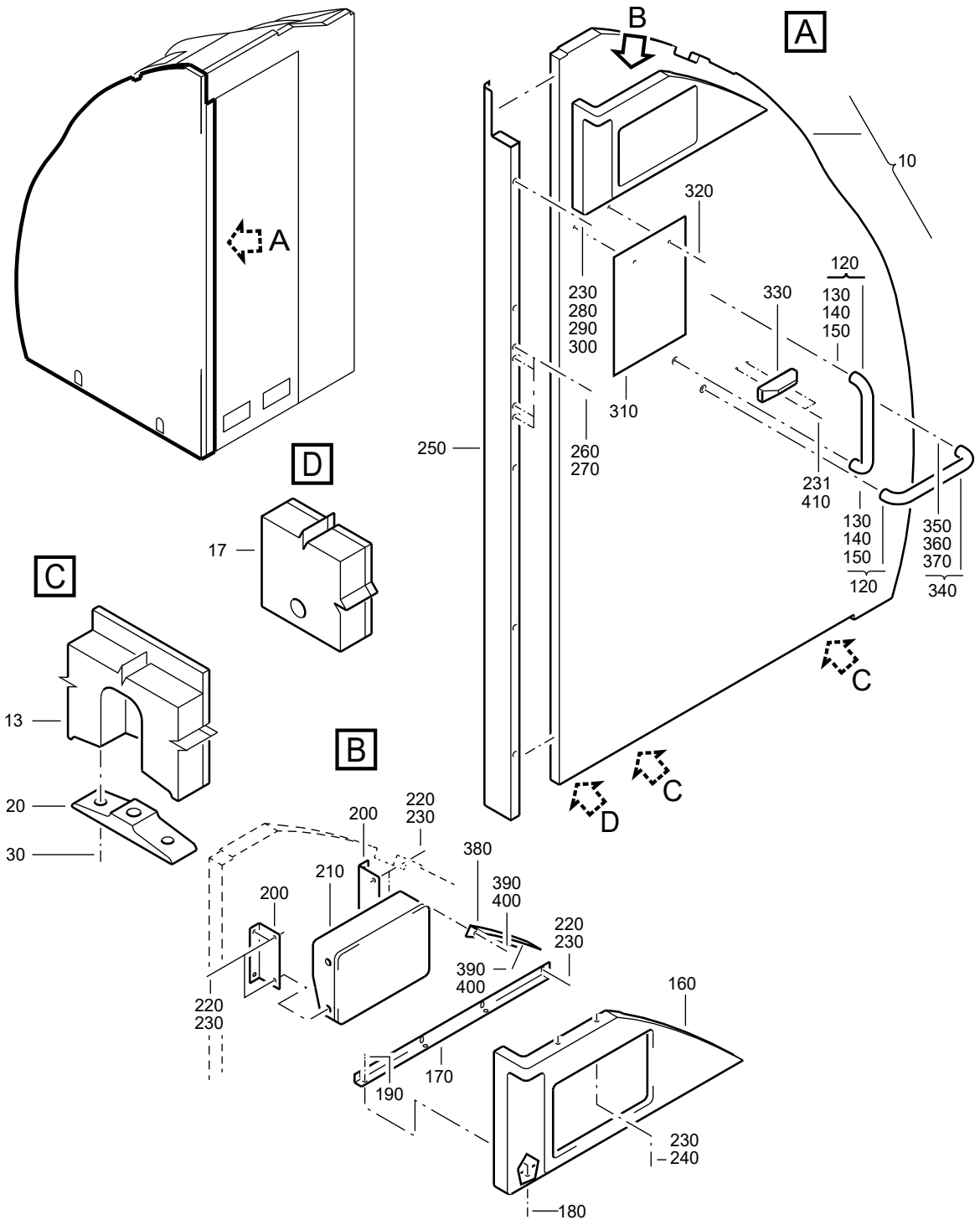

F_PL_254151_06_R_01_00

WALL-SIDE
Figure 06R/EN254151SHEET06R01

FIG. ITEM	PART NUMBER	AIRLINE STOCK NUMBER	NOMENCLATURE 1234567		EFF CODE	UNITS PER ASSY
06R						
-001A	D2549030602465		. WALL-SIDE used on 040G (25415141A), 040F (25415141D), 040G (25415141G) SEE 25-41-51-41A FOR NHA SEE 25-41-51-41D FOR NHA SEE 25-41-51-41G FOR NHA	NP		RF
-001B	D2549010609865		. WALL-SIDE used on 040D (25415141P) SEE 25-41-51-41P FOR NHA	NP		RF
-001C	D2549020514865		. WALL-SIDE used on 040A (25415141P) SEE 25-41-51-41P FOR NHA	NP		RF
-001D	D2549020809865		. WALL-SIDE used on 040E (25415141V), 040B (25415141Y), 040J(25415142A), 040A (25415142F) SEE 25-41-51-41V FOR NHA SEE 25-41-51-41Y FOR NHA SEE 25-41-51-42A FOR NHA SEE 25-41-51-42F FOR NHA	NP		RF
-001E	D2549010611865		. WALL-SIDE used on 040D (25415141Z) SEE 25-41-51-41Z FOR NHA	NP		RF
010A	A225401233-606		. . WALL ASSY-SIDE,AFT used on 001A			001
-010B	A225401234-540		. . WALL ASSY-SIDE,AFT used on 001B			001
-010C	A225401234-502		. . WALL ASSY-SIDE,AFT used on 001C			001
-010D	A225401235-518		. . WALL ASSY-SIDE,AFT used on 001D			001

- ITEM NOT ILLUSTRATED

FIG. ITEM	PART NUMBER	AIRLINE STOCK NUMBER	NOMENCLATURE 1234567	EFF CODE	UNITS PER ASSY
-010E	A225401235-548		. . WALL ASSY-SIDE,AFT used on 001E		001
013A	A225400231-202		. . . BRACKET BUY PN A225491004-002 used on 010A		002
017A	A225400231-214		. . . BRACKET BUY PN A225491004-232 used on 010A		001
020A	A225400232-208		. . . FITTING used on 010A, 010B, 010C, 010D, 010E		002
030A	NAS1102E4-10		. . . SCREW used on 010A, 010C		004
-030B	ABS0704-6-50		. . . SCREW used on 010B, 010D		004
-040A	NAS1833C08-370		. . . INSERT used on 010A, 010B, 010C, 010D, 010E		083
-050A	NSA5054-08		. . . INSERT used on 010A, 010B, 010C, 010D, 010E		001
-060A	NAS1835C08		. . . INSERT used on 010A, 010B, 010C, 010D, 010E		007
-070A	NAS1833C3-370		. . . INSERT used on 010A, 010B, 010C, 010D, 010E		023
-080A	NSA5054-5		. . . INSERT used on 010A, 010B, 010C, 010D, 010E		012

- ITEM NOT ILLUSTRATED

FIG. ITEM	PART NUMBER	AIRLINE STOCK NUMBER	NOMENCLATURE 1234567	EFF CODE	UNITS PER ASSY
-090A	NSA5054-3		. . . INSERT used on 010A, 010B, 010C, 010D, 010E		001
-100A	NSA5054-4		. . . INSERT used on 010A, 010B, 010C, 010D, 010E		008
-110A	NSA935405-01		. . . MOUNT used on 010A, 010B, 010C, 010D, 010E		014
120A	550-33-300MBB		. . HANDLE ASSY used on 001A, 001C, 001D, 001E		002
130A	S7224		. . . SCREW-SPECIAL used on 120A		004
140A	8534		. . . PIN-SECURITY used on 120A		004
150A	8587		. . . WASHER-SPECIAL used on 120A		004
160A	A225401410-502		. . COVER-OXYGEN CONTAIN-ER ASSY used on 001A, 001B, 001C, 001D, 001E		001
170A	A225400450-204		. . ANGLE used on 001A, 001B, 001C, 001D, 001E		001
180A	NAS1102-08-5		. . SCREW used on 001A, 001B, 001C, 001D, 001E		004
190A	NSA5067-08-1		. . NUT used on 001A, 001B, 001C, 001D, 001E		004

- ITEM NOT ILLUSTRATED

FIG. ITEM	PART NUMBER	AIRLINE STOCK NUMBER	NOMENCLATURE 1234567	EFF CODE	UNITS PER ASSY
200A	A225400450-202		. . ANGLE used on 001A, 001B, 001C, 001D, 001E		002
210A	22C150150320004		. . CONTAINER ASSY-OXYGEN used on 001A, 001B, 001C, 001D, 001E		001
220A	NAS1096-2-5		. . SCREW BUY PN NAS1801-08-5 used on 001A, 001B, 001C, 001D, 001E		012
230A	NAS1149CN832R		. . WASHER used on 001A, 001B, 001C, 001D, 001E		015
231A	NAS1149CN832R		. . WASHER used on 001B		002
240A	A225400451-202		. . STUD used on 001A, 001B, 001C, 001D, 001E		002
250A	A225401222-544		. . POST ASSY used on 001A, 001B, 001C, 001D, 001E		001
260A	NAS514P832-4		. . . SCREW used on 250A		004
270A	NAS1068A08		. . . NUT BUY PN MS21075L08 used on 250A		004
280A	NAS1096-2-7		. . SCREW BUY PN NAS1801-08-7 used on 001A, 001B, 001C, 001D, 001E		007

- ITEM NOT ILLUSTRATED

FIG. ITEM	PART NUMBER	AIRLINE STOCK NUMBER	NOMENCLATURE 1234567	EFF CODE	UNITS PER ASSY
290A	2634DP437-110		. . CAP used on 001A, 001B, 001C, 001D, 001E		005
300A	NAS1096-3-9		. . SCREW BUY PN NAS1801-3-9 used on 001A, 001B, 001C, 001D, 001E		001
310A	2336000-9		. . KIT-LAVATORY PICTURE FRAME used on 001A, 001B, 001C, 001D, 001E		001
320A	NAS1100-08-6		. . SCREW used on 001A, 001B, 001C, 001D, 001E		002
330A	A2547380206000		. . SUPPORT used on 001B		001
340A	550MBB1		. . HANDLE ASSY used on 001B		001
350A	S7224		. . . SCREW-SPECIAL used on 340A		002
360A	8534		. . . PIN-SECURITY used on 340A		002
370A	8587		. . . WASHER-SPECIAL used on 340A		002
380A	A225401236-200		. . ANGLE used on 001B, 001C, 001D, 001E		001
390A	NAS1096-2-7		. . SCREW BUY PN NAS1801-08-7 used on 001B, 001C, 001D, 001E		009

- ITEM NOT ILLUSTRATED

FIG. ITEM	PART NUMBER	AIRLINE STOCK NUMBER	NOMENCLATURE 1234567	EFF CODE	UNITS PER ASSY
400A	NAS1149CN832R		. . WASHER used on 001B, 001C, 001D, 001E		009
410A	NAS1096-2-7		. . SCREW BUY PN NAS1801-08-7 used on 001B		002

- ITEM NOT ILLUSTRATED

THIS PAGE IS INTENTIONALLY LEFT BLANK

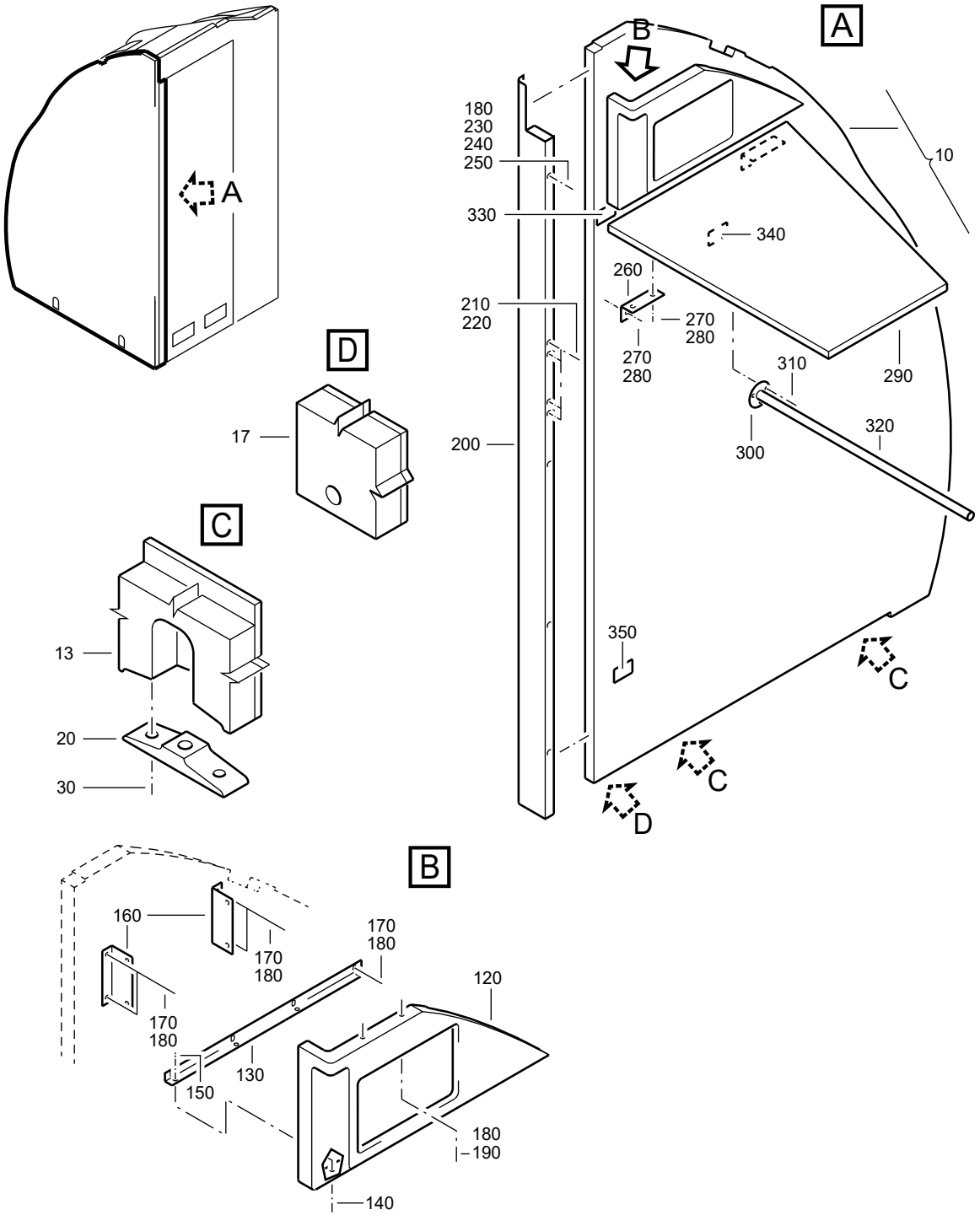

F_PL_254151_06_S_01_00

WALL-SIDE
Figure 06S/EN254151SHEET06S01

FIG. ITEM	PART NUMBER	AIRLINE STOCK NUMBER	NOMENCLATURE 1234567	EFF CODE	UNITS PER ASSY
06S					
-001A	D2549020712065		. WALL-SIDE NP used on 040A (25415141E) SEE 25-41-51-41E FOR NHA		RF
010A	A225401233-610		. . WALL ASSY-SIDE,AFT used on 001A		001
013A	A225400231-202		. . . BRACKET BUY PN A225491004-002 used on 010A		002
017A	A225400231-214		. . . BRACKET BUY PN A225491004-232 used on 010A		001
020A	A225400232-208		. . . FITTING used on 010A		002
030A	NAS1102E4-10		. . . SCREW used on 010A		004
-040A	NAS1833C08-370		. . . INSERT used on 010A		095
-050A	NSA5054-08		. . . INSERT used on 010A		001
-060A	NAS1835C08		. . . INSERT used on 010A		007
-070A	NAS1833C3-370		. . . INSERT used on 010A		023
-080A	NSA5054-5		. . . INSERT used on 010A		012
-090A	NSA5054-3		. . . INSERT used on 010A		001

- ITEM NOT ILLUSTRATED

FIG. ITEM	PART NUMBER	AIRLINE STOCK NUMBER	NOMENCLATURE 1234567	EFF CODE	UNITS PER ASSY
-100A	NSA5054-4		. . . INSERT used on 010A		008
-110A	NSA935405-01		. . . MOUNT used on 010A		010
120A	A225401410-600		. . COVER-OXYGEN CONTAIN-ER ASSY used on 001A		001
130A	A225400450-204		. . ANGLE used on 001A		001
140A	NAS1102-08-5		. . SCREW used on 001A		004
150A	NSA5067-08-1		. . NUT used on 001A		004
160A	A225400450-202		. . ANGLE used on 001A		002
170A	NAS1096-2-5		. . SCREW BUY PN NAS1801-08-5 used on 001A		012
180A	NAS1149CN832R		. . WASHER used on 001A		019
190A	A225400451-202		. . STUD used on 001A		002
200A	A225401222-508		. . POST ASSY used on 001A		001
210A	NAS514P832-4		. . . SCREW used on 200A		004
220A	NAS1068A08		. . . NUT BUY PN MS21075L08 used on 200A		004

- ITEM NOT ILLUSTRATED

FIG. ITEM	PART NUMBER	AIRLINE STOCK NUMBER	NOMENCLATURE 1234567	EFF CODE	UNITS PER ASSY
230A	NAS1096-2-7		. . SCREW BUY PN NAS1801-08-7 used on 001A		005
240A	2634DP437-110		. . CAP used on 001A		004
250A	NAS1096-3-9		. . SCREW BUY PN NAS1801-3-9 used on 001A		001
260A	A225401238-200		. . ANGLE-L used on 001A		002
270A	NAS1096-2-9		. . SCREW BUY PN NAS1801-08-9 used on 001A		008
280A	ASNA0113-40ADL		. . WASHER used on 001A		008
290A	A225401238-508		. . COMPARTMENT ASSY-OVHD STWG used on 001A		001
300A	A325200401-200		. . BRACKET used on 001A		001
310A	NAS514P832-6		. . SCREW used on 001A		003
320A	A225401238-212		. . RAIL-WARDROBE used on 001A		001
330A	A325232319-374		. . PLACARD used on 001A		001
340A	A325232319-366		. . PLACARD used on 001A		001
350A	A325232319-412		. . PLACARD used on 001A		001

- ITEM NOT ILLUSTRATED

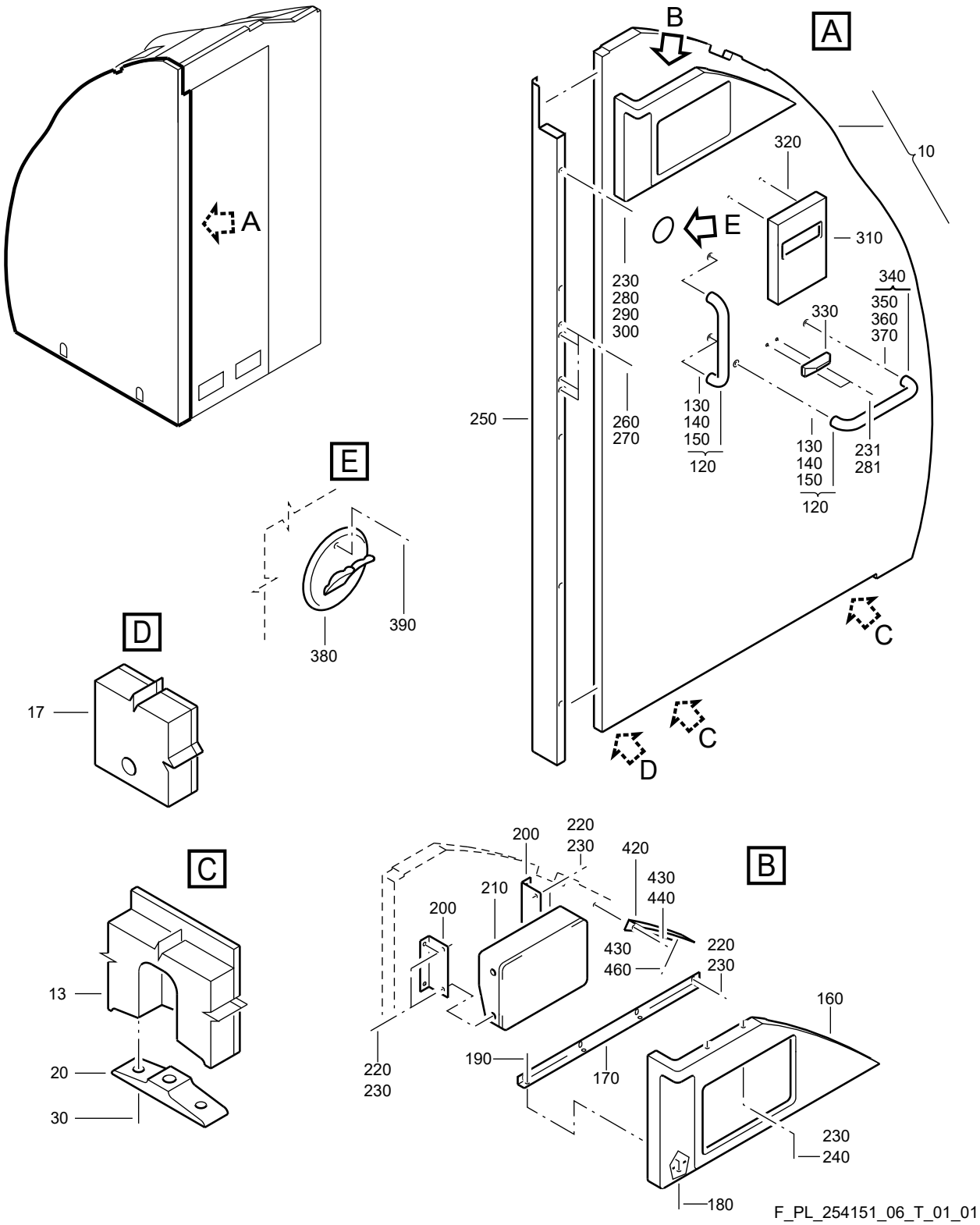

WALL-SIDE
Figure 06T/EN254151SHEET06T01

FIG. ITEM	PART NUMBER	AIRLINE STOCK NUMBER	NOMENCLATURE 1234567	EFF CODE	UNITS PER ASSY
06T					
-001A	D2549020713665		. WALL-SIDE NP used on 040F (25415141A) SEE 25-41-51-41A FOR NHA		RF
-001B	D2549020701665		. WALL-SIDE NP used on 040K (25415141A) SEE 25-41-51-41A FOR NHA		RF
-001C	D2549020507465		. WALL-SIDE NP PRE VSB A2-254-25-054 used on 040A (25415141H) SEE 25-41-51-41H FOR NHA		RF
-001D	D2549010606665		. WALL-SIDE NP used on 040G (25415141J) SEE 25-41-51-41J FOR NHA		RF
-001E	D2549020705865		. WALL-SIDE NP used on 040H (25415141J) SEE 25-41-51-41J FOR NHA		RF
-001F	D2549020714665		. WALL-SIDE NP PRE VSB A2-254-25-020 used on 040D (25415141J) SEE 25-41-51-41J FOR NHA		RF
-001G	D2549030600265		. WALL-SIDE NP used on 040E (25415141J), 040C (25415141L) SEE 25-41-51-41J FOR NHA SEE 25-41-51-41L FOR NHA		RF
-001H	D2549010605265		. WALL-SIDE NP used on 040B (25415141K) SEE 25-41-51-41K FOR NHA		RF
-001J	D2549020606465		. WALL-SIDE NP used on 040H (25415101H) SEE 25-41-51-01H FOR NHA		RF

- ITEM NOT ILLUSTRATED

FIG. ITEM	PART NUMBER	AIRLINE STOCK NUMBER	NOMENCLATURE 1234567		EFF CODE	UNITS PER ASSY
-001K	D2549020509665		. WALL-SIDE PRE VSB A2-254-25-080 used on 040F (25415141J) SEE 25-41-51-41J FOR NHA	NP		RF
-001L	D2549030610265		. WALL-SIDE used on 040M (25415141M) SEE 25-41-51-41M FOR NHA	NP		RF
-001M	D2549030513265		. WALL-SIDE used on 040L (25415101V) SEE 25-41-51-01V FOR NHA	NP		RF
-001N	D2549020511665		. WALL-SIDE used on 040J (25415141R) SEE 25-41-51-41R FOR NHA	NP		RF
-001P	D2549030600265		. WALL-SIDE used on 040L (25415141J) SEE 25-41-51-41J FOR NHA	NP		RF
-001Q	R22540160500065		. WALL-SIDE POST VSB A2-254-25-020 used on 040N (25415141J) SEE 25-41-51-41J FOR NHA	NP		RF
-001R	R22540111500065		. WALL-SIDE POST VSB A2-254-25-054 used on 040Q (25415141H) SEE 25-41-51-41H FOR NHA	NP		RF
-001S	R22540161300065		. WALL-SIDE POST VSB A2-254-25-080 used on 040P (25415141J) SEE 25-41-51-41J FOR NHA	NP		RF
010A	A225401233-620		. . WALL ASSY-SIDE,AFT PRE VSB A2-254-25-020 used on 001A, 001F			001

- ITEM NOT ILLUSTRATED

FIG. ITEM	PART NUMBER	AIRLINE STOCK NUMBER	NOMENCLATURE 1234567	EFF CODE	UNITS PER ASSY
-010B	A225401233-622		. . WALL ASSY-SIDE,AFT used on 001B, 001E		001
-010C	A225401233-542		. . WALL ASSY-SIDE,AFT used on 001C, 001R		001
-010D	A225401233-632		. . WALL ASSY-SIDE,AFT used on 001D		001
-010E	A225401233-630		. . WALL ASSY-SIDE,AFT used on 001G		001
-010F	A225401233-628		. . WALL ASSY-SIDE,AFT used on 001H		001
-010G	A225401231-592		. . WALL ASSY-SIDE,AFT used on 001J		001
-010H	A225401233-626		. . WALL ASSY-SIDE,AFT used on 001K, 001S		001
-010J	A225401233-646		. . WALL ASSY-SIDE,AFT POST SB 25-1325 used on 001L		001
-010K	A225401233-644		. . WALL ASSY-SIDE,AFT POST SB 25-1315 used on 001M		001
-010L	A2254012348556		. . WALL ASSY-SIDE,AFT POST SB 25-1314 used on 001N		001
-010M	A225491231-544		. . WALL ASSY-SIDE,AFT POST SB 25-1289 used on 001P		001
-010N	A225401233-660		. . WALL ASSY-SIDE,AFT POST VSB A2-254-25-020 used on 001Q		001

- ITEM NOT ILLUSTRATED

FIG. ITEM	PART NUMBER	AIRLINE STOCK NUMBER	NOMENCLATURE 1234567	EFF CODE	UNITS PER ASSY
013A	A225400231-202		. . . BRACKET BUY PN A225491004-002 used on 010A, 010B, 010C, 010D, 010E, 010F, 010G, 010H, 010J, 010K, 010L, 010M, 010N		002
017A	A225400231-214		. . . BRACKET BUY PN A225491004-232 used on 010A, 010B, 010C, 010D, 010E, 010F, 010G, 010H, 010J, 010K, 010L, 010M, 010N		001
-019A	A225400236-550		. . BRACKET POST VSB A2-254-25-020 used on 010N		001
020A	A225400232-208		. . . FITTING used on 010A, 010B, 010C, 010D, 010E, 010F, 010G, 010H, 010J, 010K, 010L, 010M, 010N		002
030A	NAS1102E4-10		. . . SCREW used on 010A, 010B, 010C, 010D, 010E, 010F, 010G, 010H, 010J, 010K, 010L, 010M, 010N		004
-040A	NAS1833C08-370		. . . INSERT used on 010A, 010B, 010C, 010D, 010E, 010F, 010G, 010H, 010J, 010K, 010L, 010M, 010N		080
-050A	NSA5054-08		. . . INSERT used on 010A, 010B, 010F, 010K, 010N		001
-060A	NAS1835C08		. . . INSERT used on 010A, 010B, 010C, 010D, 010E, 010F, 010G, 010H, 010J, 010K, 010L, 010M, 010N		007

- ITEM NOT ILLUSTRATED

FIG. ITEM	PART NUMBER	AIRLINE STOCK NUMBER	NOMENCLATURE 1234567	EFF CODE	UNITS PER ASSY
-070A	NAS1833C3-370		. . . INSERT used on 010A, 010B, 010C, 010D, 010E, 010F, 010G, 010H, 010J, 010K, 010L, 010M, 010N		023
-080A	NSA5054-5		. . . INSERT used on 010A, 010B, 010C, 010D, 010E, 010F, 010G, 010H, 010J, 010K, 010L, 010M, 010N		012
-090A	NSA5054-3		. . . INSERT used on 010A, 010B, 010C, 010D, 010E, 010F, 010G, 010H, 010J, 010K, 010L, 010M, 010N		001
-100A	NSA5054-4		. . . INSERT used on 010A, 010B, 010C, 010D, 010E, 010F, 010G, 010H, 010J, 010K, 010L, 010M, 010N		008
-110A	NSA935405-01		. . . MOUNT used on 010A, 010B, 010C, 010D, 010E, 010F, 010G, 010H, 010J, 010K, 010L, 010M, 010N		010
120A	550-33-300MBB		. . HANDLE ASSY used on 001A, 001B, 001E, 001F, 001J, 001K, 001L, 001N, 001Q, 001S		002
130A	S7224		. . . SCREW-SPECIAL used on 120A		002
140A	8534		. . . PIN-SECURITY used on 120A		002
150A	8587		. . . WASHER-SPECIAL used on 120A		002

- ITEM NOT ILLUSTRATED

FIG. ITEM	PART NUMBER	AIRLINE STOCK NUMBER	NOMENCLATURE 1234567	EFF CODE	UNITS PER ASSY
160A	A225401410-502		. . COVER-OXYGEN CONTAIN-ER ASSY used on 001A, 001B, 001C, 001D, 001E, 001F, 001G, 001H, 001J, 001K, 001L, 001N, 001P, 001Q, 001R, 001S		001
-160B	A225401410-512		. . COVER-OXYGEN CONTAIN-ER ASSY used on 001M		001
170A	A225400450-204		. . ANGLE used on 001A, 001B, 001C, 001D, 001E, 001F, 001G, 001H, 001J, 001K, 001L, 001M, 001N, 001P, 001Q, 001R, 001S		001
180A	NAS1102-08-5		. . SCREW used on 001A, 001B, 001C, 001D, 001E, 001F, 001G, 001H, 001J, 001K, 001L, 001M, 001N, 001P, 001Q, 001R, 001S		004
190A	NSA5067-08-1		. . NUT used on 001A, 001B, 001C, 001D, 001E, 001F, 001G, 001H, 001J, 001K, 001L, 001M, 001N, 001P, 001Q, 001R, 001S		004
200A	A225400450-202		. . ANGLE used on 001A, 001B, 001C, 001D, 001E, 001F, 001G, 001H, 001J, 001K, 001L, 001M, 001N, 001P, 001Q, 001R, 001S		002

- ITEM NOT ILLUSTRATED

FIG. ITEM	PART NUMBER	AIRLINE STOCK NUMBER	NOMENCLATURE 1234567	EFF CODE	UNITS PER ASSY
210A	22C150150320004		. . CONTAINER ASSY-OXYGEN PRE VSB A2-254-25-054 PRE VSB A2-254-25-080 used on 001A, 001B, 001C, 001D, 001E, 001F, 001H, 001K, 001Q		001
-210B	G2F212-85		. . CONTAINER ASSY-OXYGEN POST SB 35-1020 used on 001G, 001J, 001L, 001N, 001P		001
-210C	22C150150030004		. . CONTAINER ASSY-OXYGEN used on 001M		001
-210D	22G150150320400		. . CONTAINER ASSY-OXYGEN POST VSB A2-254-25-054 POST VSB A2-254-25-080 used on 001R, 001S		001
220A	NAS1096-2-5		. . SCREW PRE VSB A2-254-25-054 PRE VSB A2-254-25-080 BUY PN NAS1801-08-5 used on 001A, 001B, 001C, 001D, 001E, 001F, 001G, 001H, 001J, 001K, 001L, 001M, 001N, 001P, 001Q		012
-220B	NAS1096-2-5		. . SCREW POST VSB A2-254-25-054 POST VSB A2-254-25-080 BUY PN NAS1801-08-5 used on 001R, 001S		008
-222A	NAS1801-08-6		. . SCREW POST VSB A2-254-25-054 POST VSB A2-254-25-080 used on 001R, 001S		004

- ITEM NOT ILLUSTRATED

FIG. ITEM	PART NUMBER	AIRLINE STOCK NUMBER	NOMENCLATURE 1234567	EFF CODE	UNITS PER ASSY
230A	NAS1149CN832R		. . WASHER used on 001A, 001B, 001C, 001D, 001E, 001F, 001G, 001H, 001J, 001K, 001L, 001M, 001N, 001P, 001Q, 001R, 001S		019
231A	NAS1149CN832R		. . WASHER used on 001C, 001D, 001G, 001H, 001M, 001P, 001R		002
240A	A225400451-202		. . STUD used on 001A, 001B, 001C, 001D, 001E, 001F, 001G, 001H, 001J, 001K, 001L, 001M, 001N, 001P, 001Q, 001R, 001S		002
250A	A225401222-500		. . POST ASSY used on 001A, 001C, 001D, 001F, 001J, 001K, 001N, 001Q, 001R, 001S		001
-250B	A225401222-526		. . POST ASSY used on 001B		001
-250C	A225401222-502		. . POST ASSY used on 001H, 001M		001
-250D	A225401222-514		. . POST ASSY used on 001G, 001P		001
-250E	A225401222-534		. . POST ASSY used on 001E, 001L		001
260A	NAS514P832-4		. . . SCREW used on 250A, 250B, 250C, 250D, 250E		004

- ITEM NOT ILLUSTRATED

FIG. ITEM	PART NUMBER	AIRLINE STOCK NUMBER	NOMENCLATURE 1234567	EFF CODE	UNITS PER ASSY
270A	NAS1068A08		. . . NUT BUY PN MS21075L08 used on 250A, 250B, 250C, 250D, 250E		004
280A	NAS1096-2-7		. . SCREW BUY PN NAS1801-08-7 used on 001A, 001B, 001C, 001D, 001E, 001F, 001G, 001H, 001J, 001K, 001L, 001M, 001N, 001P, 001Q, 001R, 001S		005
281A	NAS1096-2-7		. . SCREW BUY PN NAS1801-08-7 used on 001C, 001D, 001G, 001H, 001M, 001P, 001R		002
290A	2634DP437-110		. . CAP used on 001A, 001B, 001C, 001D, 001E, 001F, 001G, 001H, 001J, 001K, 001L, 001M, 001N, 001P, 001Q, 001R, 001S		005
300A	NAS1096-3-9		. . SCREW BUY PN NAS1801-3-9 used on 001A, 001B, 001C, 001D, 001E, 001F, 001G, 001H, 001J, 001K, 001L, 001M, 001N, 001P, 001Q, 001R, 001S		001
310A	A2547577004800		. . DISPENSER-TOILET SEAT COVER used on 001B, 001D, 001E, 001G, 001H, 001K, 001L, 001P, 001S A254-75770-048-00		001
-310B	A2547577007600		. . DISPENSER-TOILET SEAT COVER used on 001M		001

- ITEM NOT ILLUSTRATED

FIG. ITEM	PART NUMBER	AIRLINE STOCK NUMBER	NOMENCLATURE 1234567	EFF CODE	UNITS PER ASSY
320A	NAS1100-08-4		. . SCREW used on 001B, 001D, 001E, 001G, 001H, 001K, 001L, 001M, 001P, 001S		002
330A	A2547380206000		. . SUPPORT used on 001C, 001D, 001G, 001H, 001P, 001R		001
-330B	A2547380208800		. . SUPPORT used on 001M		001
340A	550MBB1		. . HANDLE ASSY used on 001C, 001D, 001G, 001H, 001M, 001P, 001R		001
350A	S7224		. . . SCREW-SPECIAL used on 340A		002
360A	8534		. . . PIN-SECURITY used on 340A		002
370A	8587		. . . WASHER-SPECIAL used on 340A		002
380A	AR197-3		. . HOOK-COAT used on 001F, 001Q		001
390A	NAS514P832-7		. . SCREW used on 001F, 001Q		001
420A	A225401236-200		. . ANGLE POST SB 25-1289 used on 001P		001
430A	NAS1149C0332R		. . WASHER used on 001P		009
440A	NAS1096-3-7		. . SCREW BUY PN NAS1801-3-7 used on 001P		004

- ITEM NOT ILLUSTRATED

FIG. ITEM	PART NUMBER	AIRLINE STOCK NUMBER	NOMENCLATURE 1234567	EFF CODE	UNITS PER ASSY
-450A	NAS1833C3-250		. . INSERT used on 001P		005
460A	NAS1096-3-5		. . SCREW BUY PN NAS1801-3-5 used on 001P		005

- ITEM NOT ILLUSTRATED

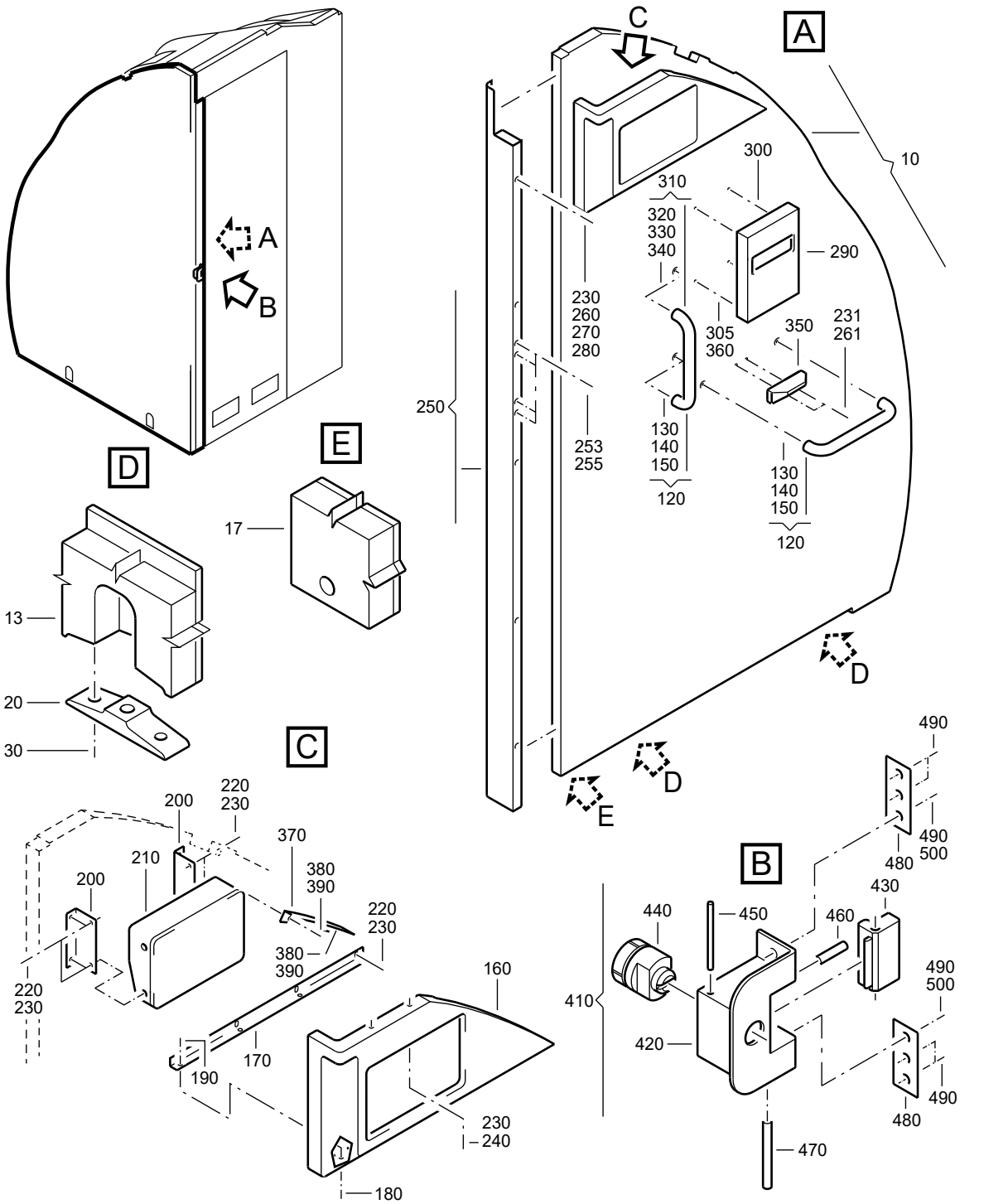

F_PL_254151_06_U_01_00

WALL-SIDE
Figure 06U/EN254151SHEET06U01

FIG. ITEM	PART NUMBER	AIRLINE STOCK NUMBER	NOMENCLATURE 1234567		EFF CODE	UNITS PER ASSY
06U						
-001A	D2549020510065		. WALL-SIDE used on 040H (25415141K) SEE 25-41-51-41K FOR NHA	NP		RF
-001B	D2549030606865		. WALL-SIDE used on 040K (25415141K) SEE 25-41-51-41K FOR NHA	NP		RF
-001C	D2549010606865		. WALL-SIDE used on 040K (25415141J) SEE 25-41-51-41J FOR NHA	NP		RF
-001D	D2549020505665		. WALL-SIDE used on 040E (25415141L) SEE 25-41-51-41L FOR NHA	NP		RF
-001E	D2549030614265		. WALL-SIDE used on 040F (25415141L) SEE 25-41-51-41L FOR NHA	NP		RF
-001F	D2549030612865		. WALL-SIDE used on 040J (25415141M), 040C (25415141T) SEE 25-41-51-41M FOR NHA SEE 25-41-51-41T FOR NHA	NP		RF
-001G	D2549030608065		. WALL-SIDE PRE VSB A2-254-25-131 used on 040H (25415141L), 040E (25415141U) SEE 25-41-51-41L FOR NHA SEE 25-41-51-41U FOR NHA	NP		RF
-001H	D2549020513265		. WALL-SIDE used on 040L (25415141R) SEE 25-41-51-41R FOR NHA	NP		RF
-001J	D2549010609065		. WALL-SIDE used on 040A (25415141N) SEE 25-41-51-41N FOR NHA	NP		RF

- ITEM NOT ILLUSTRATED

FIG. ITEM	PART NUMBER	AIRLINE STOCK NUMBER	NOMENCLATURE 1234567		EFF CODE	UNITS PER ASSY
-001K	D2549030613465		. WALL-SIDE used on 040J (25415141L) SEE 25-41-51-41L FOR NHA	NP		RF
-001L	D2549030609865		. WALL-SIDE used on 040D (25415141S) SEE 25-41-51-41S FOR NHA	NP		RF
-001M	D2549030403865		. WALL-SIDE PRE VSB A2-254-25-080 used on 040B (25415141T) SEE 25-41-51-41T FOR NHA	NP		RF
-001N	D2549030400265		. WALL-SIDE used on 040K (25415141S) SEE 25-41-51-41S FOR NHA	NP		RF
-001P	R22540117200065		. WALL-SIDE POST VSB A2-254-25-080 used on 040J (25415141T) SEE 25-41-51-41T FOR NHA	NP		RF
-001Q	R22540161400065		. WALL-SIDE POST VSB A2-254-25-131 used on 040L (25415141L) SEE 25-41-51-41L FOR NHA	NP		RF
010A	A2254012338636		. . WALL ASSY-SIDE,AFT POST SB 25-1314 used on 001A			001
-010B	A225401233-638		. . WALL ASSY-SIDE,AFT used on 001B			001
-010C	A225401233-640		. . WALL ASSY-SIDE,AFT used on 001C			001
-010D	A225401233-556		. . WALL ASSY-SIDE,AFT used on 001D			001

- ITEM NOT ILLUSTRATED

FIG. ITEM	PART NUMBER	AIRLINE STOCK NUMBER	NOMENCLATURE 1234567	EFF CODE	UNITS PER ASSY
-010E	A225401233-612		. . WALL ASSY-SIDE,AFT used on 001E		001
-010F	A225401234-506		. . WALL ASSY-SIDE,AFT used on 001F		001
-010G	A225401234-510		. . WALL ASSY-SIDE,AFT PRE VSB A2-254-25-131 used on 001G		001
-010H	A225401234-524		. . WALL ASSY-SIDE,AFT used on 001H		001
-010J	A2254012348508		. . WALL ASSY-SIDE,AFT POST SB 25-1314 used on 001J		001
-010K	A225401234-530		. . WALL ASSY-SIDE,AFT used on 001K		001
-010L	A225401234-516		. . WALL ASSY-SIDE,AFT used on 001L		001
-010M	A225401234-522		. . WALL ASSY-SIDE,AFT used on 001M, 001P		001
-010N	A225401234-596		. . WALL ASSY-SIDE,AFT POST SB 25-1293 used on 001N		001
-010P	A225401233-662		. . WALL ASSY-SIDE,AFT POST VSB A2-254-25-131 used on 001Q		001
013A	A225400231-202		. . . BRACKET BUY PN A225491004-002 used on 010A, 010B, 010C, 010D, 010E		002

- ITEM NOT ILLUSTRATED

FIG. ITEM	PART NUMBER	AIRLINE STOCK NUMBER	NOMENCLATURE 1234567	EFF CODE	UNITS PER ASSY
017A	A225400231-214		. . . BRACKET BUY PN A225491004-232 used on 010A, 010B, 010C, 010D, 010E		001
020A	A225400232-208		. . . FITTING used on 010A, 010B, 010C, 010D, 010E, 010F, 010G, 010H, 010J, 010K, 010L, 010M, 010N, 010P		002
030A	NAS1102E4-10		. . . SCREW used on 010A, 010B, 010C, 010D, 010E		004
-030B	ABS0704-6-50		. . . SCREW used on 010F, 010G, 010H, 010J, 010K, 010L, 010M, 010N, 010P		004
-040A	NAS1833C08-370		. . . INSERT used on 010A, 010B, 010C, 010D, 010E, 010F, 010G, 010H, 010J, 010K, 010L, 010M, 010N, 010P		080
-050A	NSA5054-08		. . . INSERT used on 010A, 010B, 010C, 010D, 010E, 010F, 010G, 010H, 010J, 010K, 010L, 010M, 010N, 010P		002
-060A	NAS1835C08		. . . INSERT used on 010A, 010B, 010C, 010D, 010E, 010F, 010G, 010H, 010J, 010K, 010L, 010M, 010N, 010P		007

- ITEM NOT ILLUSTRATED

FIG. ITEM	PART NUMBER	AIRLINE STOCK NUMBER	NOMENCLATURE 1234567	EFF CODE	UNITS PER ASSY
-070A	NAS1833C3-370		. . . INSERT used on 010A, 010B, 010C, 010D, 010E, 010F, 010G, 010H, 010J, 010K, 010L, 010M, 010N, 010P		023
-080A	NSA5054-5		. . . INSERT used on 010A, 010B, 010C, 010D, 010E, 010F, 010G, 010H, 010J, 010K, 010L, 010M, 010N, 010P		012
-090A	NSA5054-3		. . . INSERT used on 010A, 010B, 010C, 010D, 010E, 010F, 010G, 010H, 010J, 010K, 010L, 010M, 010N, 010P		001
-100A	NSA5054-4		. . . INSERT used on 010A, 010B, 010C, 010D, 010E, 010F, 010G, 010H, 010J, 010K, 010L, 010M, 010N, 010P		008
-110A	NSA935405-01		. . . MOUNT used on 010A, 010B, 010C, 010D, 010E, 010F, 010G, 010H, 010J, 010K, 010L, 010M, 010N, 010P		010
120A	550-33-300MBB		. . HANDLE ASSY used on 001A, 001B, 001C, 001H, 001J, 001K, 001L, 001M, 001N, 001P		002
130A	S7224		. . . SCREW-SPECIAL used on 120A		002
140A	8534		. . . PIN-SECURITY used on 120A		002

- ITEM NOT ILLUSTRATED

FIG. ITEM	PART NUMBER	AIRLINE STOCK NUMBER	NOMENCLATURE 1234567	EFF CODE	UNITS PER ASSY
150A	8587		. . . WASHER-SPECIAL used on 120A		002
160A	A225401410-502		. . COVER-OXYGEN CONTAIN-ER ASSY used on 001A, 001B, 001C, 001D, 001G, 001H, 001K, 001L, 001M, 001N, 001P, 001Q		001
-160B	A225401410-512		. . COVER-OXYGEN CONTAIN-ER ASSY used on 001E		001
-160C	A225401410-504		. . COVER-OXYGEN CONTAIN-ER ASSY used on 001F		001
-160D	A225401410-510		. . COVER-OXYGEN CONTAIN-ER ASSY used on 001J		001
170A	A225400450-204		. . ANGLE used on 001A, 001B, 001C, 001D, 001E, 001F, 001G, 001H, 001J, 001K, 001L, 001M, 001N, 001P, 001Q		001
180A	NAS1102-08-5		. . SCREW used on 001A, 001B, 001C, 001D, 001E, 001F, 001G, 001H, 001J, 001K, 001L, 001M, 001N, 001P, 001Q		004
190A	NSA5067-08-1		. . NUT used on 001A, 001B, 001C, 001D, 001E, 001F, 001G, 001H, 001J, 001K, 001L, 001M, 001N, 001P, 001Q		004

- ITEM NOT ILLUSTRATED

FIG. ITEM	PART NUMBER	AIRLINE STOCK NUMBER	NOMENCLATURE 1234567	EFF CODE	UNITS PER ASSY
200A	A225400450-202		. . ANGLE used on 001A, 001B, 001C, 001D, 001E, 001F, 001G, 001H, 001J, 001K, 001L, 001M, 001N, 001P, 001Q		002
210A	G2F212-85		. . CONTAINER ASSY-OXYGEN PRE VSB A2-254-25-070 PRE VSB A2-254-25-083 used on 001A, 001B, 001C, 001G, 001K, 001L, 001N, 001Q		001
-210B	E2F212-85		. . CONTAINER ASSY-OXYGEN used on 001D, 001H		001
-210C	22C150150030004		. . CONTAINER ASSY-OXYGEN PRE VSB A2-254-25-070 used on 001E		001
-210D	G2F212-51		. . CONTAINER ASSY-OXYGEN PRE VSB A2-254-25-046 used on 001F		001
-210E	G2F212-75		. . CONTAINER ASSY-OXYGEN used on 001J		001
-210F	22C150150320004		. . CONTAINER ASSY-OXYGEN PRE VSB A2-254-25-080 used on 001M		001
-210G	22G150150320400		. . CONTAINER ASSY-OXYGEN POST VSB A2-254-25-070 POST VSB A2-254-25-080 POST VSB A2-254-25-083 used on 001A, 001B, 001P		001
-210H	22G150150460400		. . CONTAINER ASSY-OXYGEN POST VSB A2-254-25-046 used on 001F		001

- ITEM NOT ILLUSTRATED

FIG. ITEM	PART NUMBER	AIRLINE STOCK NUMBER	NOMENCLATURE 1234567	EFF CODE	UNITS PER ASSY
-210J	22G220150320400		. . CONTAINER ASSY-OXYGEN POST VSB A2-254-25-069 used on 001B		001
-210K	22G150150030400		. . CONTAINER ASSY-OXYGEN POST VSB A2-254-25-070 used on 001E		001
220A	NAS1096-2-5		. . SCREW PRE VSB A2-254-25-046 PRE VSB A2-254-25-069 PRE VSB A2-254-25-070 PRE VSB A2-254-25-080 PRE VSB A2-254-25-083 BUY PN NAS1801-08-5 used on 001A, 001B, 001C, 001D, 001E, 001F, 001G, 001H, 001J, 001K, 001L, 001M, 001N, 001Q		008
-220B	NAS1096-2-5		. . SCREW POST VSB A2-254-25-046 POST VSB A2-254-25-069 POST VSB A2-254-25-070 POST VSB A2-254-25-080 POST VSB A2-254-25-083 BUY PN NAS1801-08-5 used on 001A, 001B, 001E, 001F, 001P		004
-222A	NAS1801-08-6		. . SCREW POST VSB A2-254-25-046 POST VSB A2-254-25-069 POST VSB A2-254-25-070 POST VSB A2-254-25-080 POST VSB A2-254-25-083 used on 001A, 001B, 001E, 001F, 001P		004

- ITEM NOT ILLUSTRATED

FIG. ITEM	PART NUMBER	AIRLINE STOCK NUMBER	NOMENCLATURE 1234567	EFF CODE	UNITS PER ASSY
230A	NAS1149CN832R		. . WASHER used on 001A, 001B, 001C, 001D, 001E, 001F, 001G, 001H, 001J, 001K, 001L, 001M, 001N, 001P, 001Q		015
231A	NAS1149CN832R		. . WASHER used on 001D, 001E, 001F, 001G, 001Q		002
240A	A225400451-202		. . STUD used on 001A, 001B, 001C, 001D, 001E, 001F, 001G, 001H, 001J, 001K, 001L, 001M, 001N, 001P, 001Q		002
250A	A225401222-500		. . POST ASSY used on 001A, 001B, 001E, 001K, 001M, 001P		001
-250B	A225401222-550		. . POST ASSY PRE VSB A2-254-25-131 used on 001C, 001G		001
-250C	A225401222-502		. . POST ASSY used on 001D, 001L, 001N		001
-250D	A225401222-528		. . POST ASSY used on 001F		001
-250E	A225401222-542		. . POST ASSY used on 001H		001
-250F	A225401222-530		. . POST ASSY used on 001J		001
-250G	A225401222-906		. . POST ASSY POST VSB A2-254-25-131 used on 001Q		001

- ITEM NOT ILLUSTRATED

FIG. ITEM	PART NUMBER	AIRLINE STOCK NUMBER	NOMENCLATURE 1234567	EFF CODE	UNITS PER ASSY
253A	NAS514P832-4		. . . SCREW used on 250A, 250B, 250C, 250D, 250E, 250F, 250G		004
255A	NAS1068A08		. . . NUT BUY PN MS21075L08 used on 250A, 250B, 250C, 250D, 250E, 250F, 250G		004
260A	NAS1096-2-7		. . SCREW BUY PN NAS1801-08-7 used on 001A, 001B, 001C, 001D, 001E, 001F, 001G, 001H, 001J, 001K, 001L, 001M, 001N, 001P, 001Q		005
261A	NAS1096-2-7		. . SCREW BUY PN NAS1801-08-7 used on 001D, 001E, 001F, 001G, 001Q		002
270A	2634DP437-110		. . CAP used on 001A, 001B, 001C, 001D, 001E, 001F, 001G, 001H, 001J, 001K, 001L, 001M, 001N, 001P, 001Q		005
280A	NAS1096-3-9		. . SCREW BUY PN NAS1801-3-9 used on 001A, 001B, 001C, 001D, 001E, 001F, 001G, 001H, 001J, 001K, 001L, 001M, 001N, 001P, 001Q		001
290A	A2547577004800		. . DISPENSER-TOILET SEAT COVER used on 001C, 001G, 001M, 001P, 001Q A254-75770-048-00		001

- ITEM NOT ILLUSTRATED

FIG. ITEM	PART NUMBER	AIRLINE STOCK NUMBER	NOMENCLATURE 1234567	EFF CODE	UNITS PER ASSY
-290B	A2547577007600		. . DISPENSER-TOILET SEAT COVER used on 001E		001
-290C	A2547577007000		. . DISPENSER-TOILET SEAT COVER used on 001F		001
-290D	155-11114-1A		. . DISPENSER-TOILET SEAT COVER used on 001J		001
300A	NAS1100-08-4		. . SCREW used on 001C, 001E, 001F, 001G, 001M, 001P, 001Q		002
305A	NAS514P832-7		. . SCREW used on 001J		004
310A	550MBB1		. . HANDLE ASSY used on 001D, 001E, 001F, 001G, 001Q		001
320A	S7224		. . . SCREW-SPECIAL used on 310A		001
330A	8534		. . . PIN-SECURITY used on 310A		001
340A	8587		. . . WASHER-SPECIAL used on 310A		001
350A	A2547380206000		. . SUPPORT used on 001D, 001G, 001Q		001
-350B	A2547380208800		. . SUPPORT used on 001E		001
-350C	A2547380208400		. . SUPPORT used on 001F		001

- ITEM NOT ILLUSTRATED

FIG. ITEM	PART NUMBER	AIRLINE STOCK NUMBER	NOMENCLATURE 1234567	EFF CODE	UNITS PER ASSY
360A	0-123-000700000		. . WASHER used on 001J		004
370A	A225401236-200		. . ANGLE used on 001F, 001G, 001H, 001J, 001K, 001L, 001M, 001N, 001P, 001Q		001
380A	NAS1096-2-7		. . SCREW BUY PN NAS1801-08-7 used on 001F, 001G, 001H, 001J, 001K, 001L, 001M, 001N, 001P, 001Q		009
390A	NAS1149CN832R		. . WASHER used on 001F, 001G, 001H, 001J, 001K, 001L, 001M, 001N, 001P, 001Q		009
-400A	NAS1833C08-370		. . INSERT POST SB 25-1293 used on 001N		002
410A	A225400208-000		. . DEVICE ASSY-EMERGENCY UNLOCKING,SINGLE DOOR POST SB 25-1316 used on 001K, 001N		001
420A	A225400208-200		. . . HOUSING-EMERGENCY UN-LOCKING DEVICE used on 410A		001
430A	A225400208-204		. . . STRIKE-EMERGENCY UN-LOCKING DEVICE used on 410A		001
440A	A225400208-202		. . . PIVOT-EMERGENCY UN-LOCKING DEVICE used on 410A		001

- ITEM NOT ILLUSTRATED

FIG. ITEM	PART NUMBER	AIRLINE STOCK NUMBER	NOMENCLATURE 1234567	EFF CODE	UNITS PER ASSY
450A	A225400208-210		. . . PIN used on 410A		001
460A	SM1275-1KNM04		. . . CATCH-SNAP used on 410A		001
470A	A225400208-208		. . . BOLT used on 410A		001
480A	A225400221-202		. . PLATE POST SB 25-1316 used on 001K, 001N		002
490A	NAS514P832-7		. . SCREW POST SB 25-1316 used on 001K, 001N		006
500A	NSA5067-08-1		. . NUT POST SB 25-1316 used on 001K, 001N		002
-510A	A225400216-314		. . STRIP-KICK POST VSB A2-254-25-131 used on 001Q		001

- ITEM NOT ILLUSTRATED

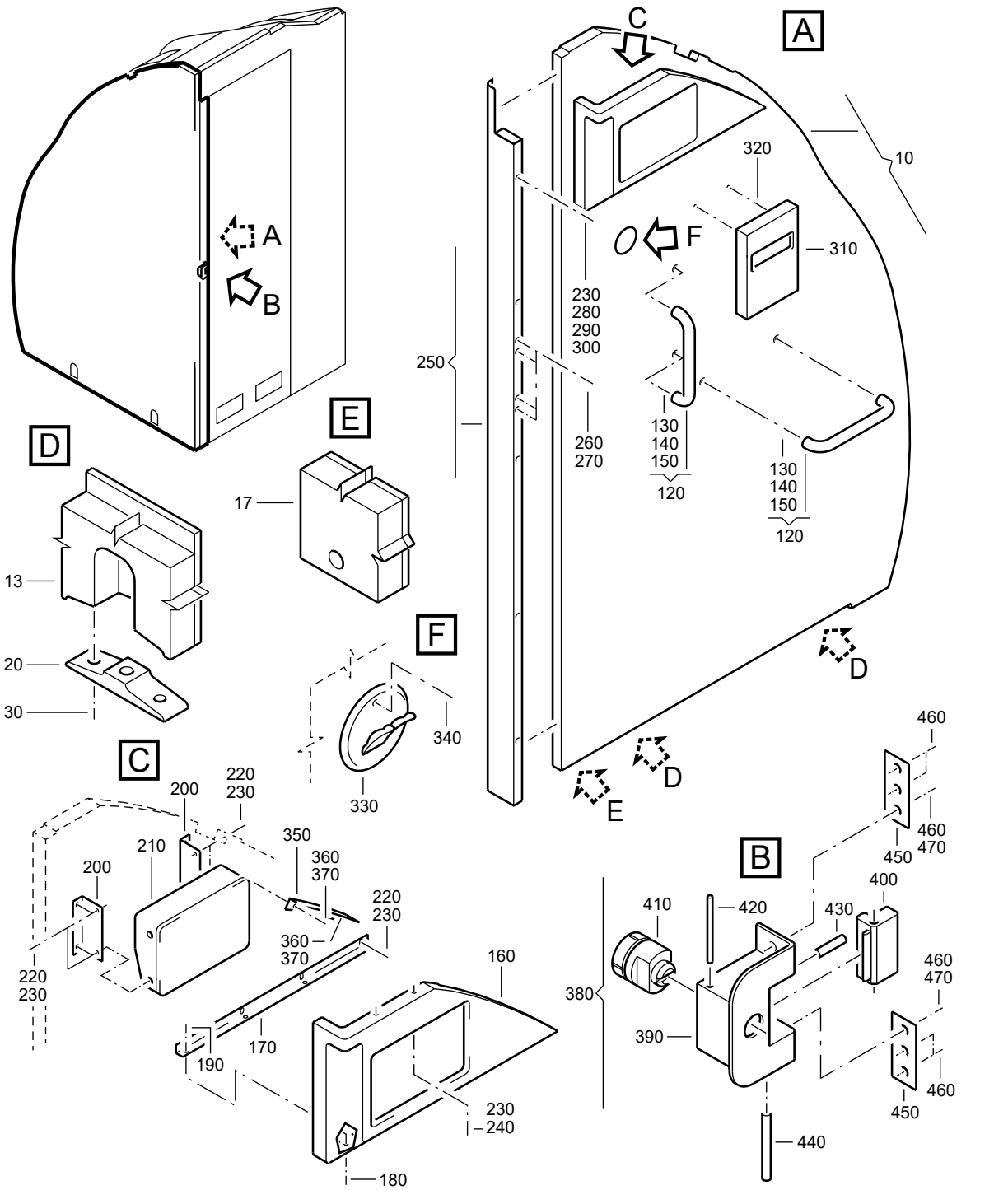

F_PL_254151_06_V_01_00

WALL-SIDE
Figure 06V/EN254151SHEET06V01

FIG. ITEM	PART NUMBER	AIRLINE STOCK NUMBER	NOMENCLATURE 1234567		EFF CODE	UNITS PER ASSY
06V						
-001A	D2549030503865		. WALL-SIDE used on 040J (25415141K) SEE 25-41-51-41K FOR NHA	NP		RF
-001B	D2549010608265		. WALL-SIDE used on 040A (25415141M) SEE 25-41-51-41M FOR NHA	NP		RF
-001C	D2549010608465		. WALL-SIDE used on 040B (25415141L) SEE 25-41-51-41L FOR NHA	NP		RF
-001D	D2549030611865		. WALL-SIDE used on 040G (25415141L) SEE 25-41-51-41L FOR NHA	NP		RF
-001E	D2549010609465		. WALL-SIDE used on 040B (25415141N) SEE 25-41-51-41N FOR NHA	NP		RF
-001F	D2549020512465		. WALL-SIDE PRE VSB A2-254-25-054 used on 040H (25415141N) SEE 25-41-51-41N FOR NHA	NP		RF
-001G	D2549020511265		. WALL-SIDE used on 040K (25415141N) SEE 25-41-51-41N FOR NHA	NP		RF
-001H	D2549020802065		. WALL-SIDE PRE VSB A2-254-25-054 used on 040C (25415141P) SEE 25-41-51-41P FOR NHA	NP		RF
-001J	D2549020511865		. WALL-SIDE used on 040B (25415141P) SEE 25-41-51-41P FOR NHA	NP		RF

- ITEM NOT ILLUSTRATED

FIG. ITEM	PART NUMBER	AIRLINE STOCK NUMBER	NOMENCLATURE 1234567		EFF CODE	UNITS PER ASSY
-001K	D2549020802865		. WALL-SIDE used on 040A (25415141Q) SEE 25-41-51-41Q FOR NHA	NP		RF
-001L	D2549030614665		. WALL-SIDE used on 040G (25415141P) SEE 25-41-51-41P FOR NHA	NP		RF
-001M	D2549020510865		. WALL-SIDE used on 040M (25415141R) SEE 25-41-51-41R FOR NHA	NP		RF
-001N	D2549010500065		. WALL-SIDE POST SB 25-1314 used on 040K (25415141L) SEE 25-41-51-41L FOR NHA	NP		RF
-001P	R22540162900065		. WALL-SIDE POST VSB A2-254-25-054 used on 040N (25415141P) SEE 25-41-51-41P FOR NHA	NP		RF
-001Q	R22540116802265		. WALL-SIDE POST VSB A2-254-25-054 used on 040N (25415141N) SEE 25-41-51-41N FOR NHA	NP		RF
010A	A225401233-634		. . WALL ASSY-SIDE,AFT used on 001A			001
-010B	A225401233-574		. . WALL ASSY-SIDE,AFT used on 001B, 001C			001
-010C	A225401233-642		. . WALL ASSY-SIDE,AFT used on 001D			001
-010D	A225401234-514		. . WALL ASSY-SIDE,AFT used on 001E			001
-010E	A225401234-512		. . WALL ASSY-SIDE,AFT used on 001F, 001Q			001

- ITEM NOT ILLUSTRATED

FIG. ITEM	PART NUMBER	AIRLINE STOCK NUMBER	NOMENCLATURE 1234567	EFF CODE	UNITS PER ASSY
-010F	A225401234-518		. . WALL ASSY-SIDE,AFT used on 001G		001
-010G	A225401234-542		. . WALL ASSY-SIDE,AFT used on 001H, 001M, 001P		001
-010H	A225401234-520		. . WALL ASSY-SIDE,AFT used on 001J		001
-010J	A225401234-564		. . WALL ASSY-SIDE,AFT used on 001L		001
-010K	A225401234-594		. . WALL ASSY-SIDE,AFT used on 001K		001
-010L	A2254012348542		. . WALL ASSY-SIDE,AFT POST SB 25-1314 used on 001N		001
013A	A225400231-202		. . . BRACKET BUY PN A225491004-002 used on 010A, 010B, 010C		002
017A	A225400231-214		. . . BRACKET BUY PN A225491004-232 used on 010A, 010B, 010C		001
020A	A225400232-208		. . . FITTING used on 010A, 010B, 010C, 010D, 010E, 010F, 010G, 010H, 010J, 010K, 010L		002
030A	NAS1102E4-10		. . . SCREW used on 010A, 010B, 010C, 010F		004
-030B	ABS0704-6-50		. . . SCREW used on 010D, 010E, 010G, 010H, 010J, 010K, 010L		004

- ITEM NOT ILLUSTRATED

FIG. ITEM	PART NUMBER	AIRLINE STOCK NUMBER	NOMENCLATURE 1234567	EFF CODE	UNITS PER ASSY
-040A	NAS1833C08-370		. . . INSERT used on 010A, 010B, 010C, 010D, 010E, 010F, 010G, 010H, 010J, 010K, 010L		080
-050A	NSA5054-08		. . . INSERT USE AS REQUIRED used on 010A, 010B, 010C, 010D, 010E, 010F, 010G, 010H, 010J, 010K, 010L		AR
-060A	NAS1835C08		. . . INSERT used on 010A, 010B, 010C, 010D, 010E, 010F, 010G, 010H, 010J		007
-070A	NAS1833C3-370		. . . INSERT used on 010A, 010B, 010C, 010D, 010E, 010F, 010G, 010H, 010J, 010K, 010L		023
-080A	NSA5054-5		. . . INSERT used on 010A, 010B, 010C, 010D, 010E, 010F, 010G, 010H, 010J, 010K, 010L		012
-090A	NSA5054-3		. . . INSERT used on 010A, 010B, 010C, 010D, 010E, 010F, 010G, 010H, 010J, 010K, 010L		001
-100A	NSA5054-4		. . . INSERT used on 010A, 010B, 010C, 010D, 010E, 010F, 010G, 010H, 010J, 010K, 010L		008
-110A	NSA935405-01		. . . MOUNT used on 010A, 010B, 010C, 010D, 010E, 010F, 010G, 010H, 010J, 010K, 010L		010

- ITEM NOT ILLUSTRATED

FIG. ITEM	PART NUMBER	AIRLINE STOCK NUMBER	NOMENCLATURE 1234567	EFF CODE	UNITS PER ASSY
120A	550-33-300MBB		. . HANDLE ASSY used on 001A, 001B, 001C, 001D, 001E, 001F, 001G, 001H, 001J, 001K, 001L, 001M, 001N, 001P, 001Q		002
130A	S7224		. . . SCREW-SPECIAL used on 120A		002
140A	8534		. . . PIN-SECURITY used on 120A		002
150A	8587		. . . WASHER-SPECIAL used on 120A		002
160A	A225401410-502		. . COVER-OXYGEN CONTAIN-ER ASSY used on 001A, 001B, 001C, 001D, 001E, 001G, 001H, 001J, 001K, 001M, 001N, 001P		001
-160B	A225401410-514		. . COVER-OXYGEN CONTAIN-ER ASSY used on 001F, 001Q		001
-160C	A225401410-518		. . COVER-OXYGEN CONTAIN-ER ASSY used on 001L		001
170A	A225400450-204		. . ANGLE used on 001A, 001B, 001C, 001D, 001E, 001F, 001G, 001H, 001J, 001K, 001L, 001M, 001N, 001P, 001Q		001
180A	NAS1102-08-5		. . SCREW used on 001A, 001B, 001C, 001D, 001E, 001F, 001G, 001H, 001J, 001K, 001L, 001M, 001N, 001P, 001Q		004

- ITEM NOT ILLUSTRATED

FIG. ITEM	PART NUMBER	AIRLINE STOCK NUMBER	NOMENCLATURE 1234567	EFF CODE	UNITS PER ASSY
190A	NSA5067-08-1		. . NUT used on 001A, 001B, 001C, 001D, 001E, 001F, 001G, 001H, 001J, 001K, 001L, 001M, 001N, 001P, 001Q		004
200A	A225400450-202		. . ANGLE used on 001A, 001B, 001C, 001D, 001E, 001F, 001G, 001H, 001J, 001K, 001L, 001M, 001N, 001P, 001Q		002
210A	22C150150320004		. . CONTAINER ASSY-OXYGEN used on 001A, 001B, 001C, 001G, 001J, 001N		001
-210B	G2F212-85		. . CONTAINER ASSY-OXYGEN PRE VSB A2-254-25-047 used on 001D, 001E, 001K, 001M		001
-210C	E2F212-58		. . CONTAINER ASSY-OXYGEN PRE VSB A2-254-25-054 used on 001F		001
-210D	G2F212-77		. . CONTAINER ASSY-OXYGEN used on 001L		001
-210E	22C15L150320100		. . CONTAINER ASSY-OXYGEN PRE VSB A2-254-25-054 used on 001H		001
-210F	22G150150320400		. . CONTAINER ASSY-OXYGEN POST VSB A2-254-25-047 POST VSB A2-254-25-054 used on 001E, 001P		001
-210G	22G220150400400		. . CONTAINER ASSY-OXYGEN POST VSB A2-254-25-054 used on 001Q		001

- ITEM NOT ILLUSTRATED

FIG. ITEM	PART NUMBER	AIRLINE STOCK NUMBER	NOMENCLATURE 1234567	EFF CODE	UNITS PER ASSY
220A	NAS1096-2-5		. . SCREW PRE VSB A2-254-25-047 PRE VSB A2-254-25-054 BUY PN NAS1801-08-5 used on 001A, 001B, 001C, 001D, 001E, 001F, 001G, 001H, 001J, 001K, 001L, 001M, 001N		008
-220B	NAS1096-2-5		. . SCREW POST VSB A2-254-25-047 POST VSB A2-254-25-054 BUY PN NAS1801-08-5 used on 001E, 001P, 001Q		004
-222A	NAS1801-08-6		. . SCREW POST VSB A2-254-25-047 POST VSB A2-254-25-054 used on 001E, 001P, 001Q		004
230A	NAS1149CN832R		. . WASHER used on 001A, 001B, 001C, 001D, 001E, 001F, 001G, 001H, 001J, 001K, 001L, 001M, 001N, 001P, 001Q		015
240A	A225400451-202		. . STUD used on 001A, 001B, 001C, 001D, 001E, 001F, 001G, 001H, 001J, 001K, 001L, 001M, 001N, 001P, 001Q		002
250A	A225401222-500		. . POST ASSY used on 001A, 001B, 001C, 001D, 001H, 001J, 001M, 001N, 001P		001
-250B	A225401222-524		. . POST ASSY used on 001E		001

- ITEM NOT ILLUSTRATED

FIG. ITEM	PART NUMBER	AIRLINE STOCK NUMBER	NOMENCLATURE 1234567	EFF CODE	UNITS PER ASSY
-250C	A225401222-538		. . POST ASSY used on 001F, 001Q		001
-250D	A225401222-502		. . POST ASSY used on 001G, 001K		001
-250E	A225401222-540		. . POST ASSY used on 001L		001
260A	NAS514P832-4		. . . SCREW used on 250A, 250B, 250C, 250D, 250E		004
270A	NAS1068A08		. . . NUT BUY PN MS21075L08 used on 250A, 250B, 250C, 250D, 250E		004
280A	NAS1096-2-7		. . SCREW BUY PN NAS1801-08-7 used on 001A, 001B, 001C, 001D, 001E, 001F, 001G, 001H, 001J, 001K, 001L, 001M, 001N, 001P, 001Q		005
290A	2634DP437-110		. . CAP used on 001A, 001B, 001C, 001D, 001E, 001F, 001G, 001H, 001J, 001K, 001L, 001M, 001N, 001P, 001Q		005
300A	NAS1096-3-9		. . SCREW BUY PN NAS1801-3-9 used on 001A, 001B, 001C, 001D, 001E, 001F, 001G, 001H, 001J, 001K, 001L, 001M, 001N, 001P, 001Q		001

- ITEM NOT ILLUSTRATED

FIG. ITEM	PART NUMBER	AIRLINE STOCK NUMBER	NOMENCLATURE 1234567	EFF CODE	UNITS PER ASSY
310A	A2547577004800		. . DISPENSER-TOILET SEAT COVER used on 001A, 001C, 001E, 001K A254-75770-048-00		001
320A	NAS1100-08-4		. . SCREW used on 001A, 001C, 001E, 001K		002
330A	AR197-3		. . HOOK-COAT used on 001J		001
340A	NAS514P832-7		. . SCREW used on 001J		001
350A	A225401236-200		. . ANGLE used on 001E, 001F, 001G, 001H, 001J, 001K, 001L, 001M, 001P, 001Q		001
360A	NAS1096-2-7		. . SCREW BUY PN NAS1801-08-7 used on 001E, 001F, 001G, 001H, 001J, 001K, 001L, 001M, 001N, 001P, 001Q		009
370A	NAS1149CN832R		. . WASHER used on 001E, 001F, 001G, 001H, 001J, 001K, 001L, 001M, 001N, 001P, 001Q		009
380A	A225400208-000		. . DEVICE ASSY-EMERGENCY UNLOCKING,SINGLE DOOR POST SB 25-1316 used on 001D		001
390A	A225400208-200		. . . HOUSING-EMERGENCY UN-LOCKING DEVICE used on 380A		001

- ITEM NOT ILLUSTRATED

FIG. ITEM	PART NUMBER	AIRLINE STOCK NUMBER	NOMENCLATURE 1234567	EFF CODE	UNITS PER ASSY
400A	A225400208-204		. . . STRIKE-EMERGENCY UN-LOCKING DEVICE used on 380A		001
410A	A225400208-202		. . . PIVOT-EMERGENCY UN-LOCKING DEVICE used on 380A		001
420A	A225400208-210		. . . PIN used on 380A		001
430A	SM1275-1KNM04		. . . CATCH-SNAP used on 380A		001
440A	A225400208-208		. . . BOLT used on 380A		001
450A	A225400221-202		. . PLATE POST SB 25-1316 used on 001D		002
460A	NAS514P832-7		. . SCREW POST SB 25-1316 used on 001D		006
470A	NSA5067-08-1		. . NUT POST SB 25-1316 used on 001D		002

- ITEM NOT ILLUSTRATED

THIS PAGE IS INTENTIONALLY LEFT BLANK

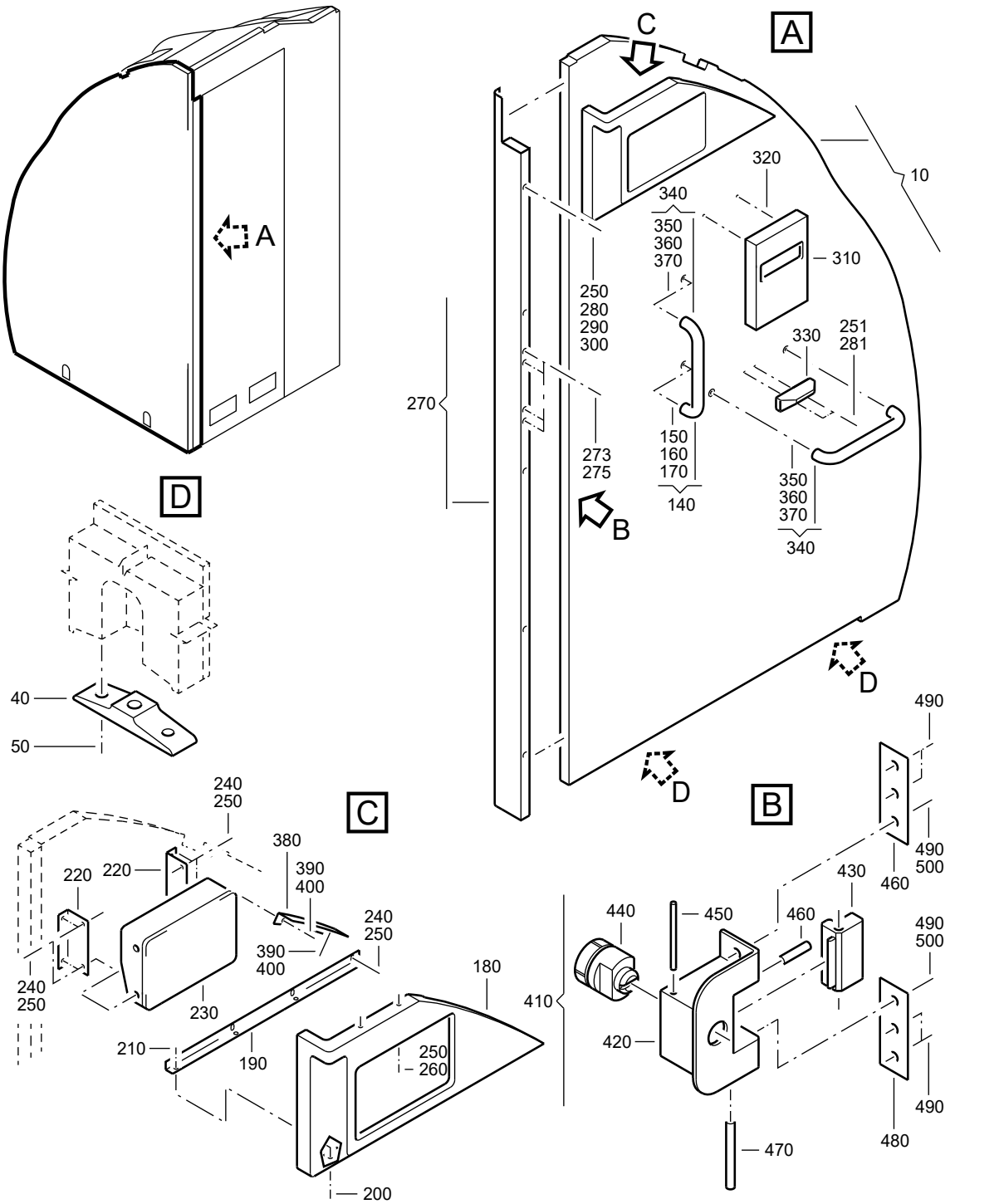

F_PL_254151_06_W_01_00

WALL-SIDE
Figure 06W/EN254151SHEET06W01

FIG. ITEM	PART NUMBER	AIRLINE STOCK NUMBER	NOMENCLATURE 1234567		EFF CODE	UNITS PER ASSY
06W						
-001A	D2549030613265		. WALL-SIDE used on 040D (25415141N) SEE 25-41-51-41N FOR NHA	NP		RF
-001B	D2549020711665		. WALL-SIDE used on 040G (25415141N), 040C (25415141S) SEE 25-41-51-41N FOR NHA SEE 25-41-51-41S FOR NHA	NP		RF
-001C	D2549020801665		. WALL-SIDE used on 040J (25415141N) SEE 25-41-51-41N FOR NHA	NP		RF
-001D	D2549010610065		. WALL-SIDE PRE VSB A2-254-25-013 used on 040E (25415141P) SEE 25-41-51-41P FOR NHA	NP		RF
-001E	D2549020802265		. WALL-SIDE used on 040F (25415141P) SEE 25-41-51-41P FOR NHA	NP		RF
-001F	D2549010610265		. WALL-SIDE used on 040L (25415141N) SEE 25-41-51-41N FOR NHA	NP		RF
-001G	D2549010610465		. WALL-SIDE used on 040H (25415141P) SEE 25-41-51-41P FOR NHA	NP		RF
-001H	D2549020800865		. WALL-SIDE used on 040J (25415141P) SEE 25-41-51-41P FOR NHA	NP		RF
-001J	D2549020510465		. WALL-SIDE used on 040K (25415141P) SEE 25-41-51-41P FOR NHA	NP		RF

- ITEM NOT ILLUSTRATED

FIG. ITEM	PART NUMBER	AIRLINE STOCK NUMBER	NOMENCLATURE 1234567		EFF CODE	UNITS PER ASSY
-001K	D2549020513665		. WALL-SIDE used on 040A (25415141R) SEE 25-41-51-41R FOR NHA	NP		RF
-001L	D2549030613865		. WALL-SIDE PRE VSB A2-254-25-080 used on 040B (25415141R) SEE 25-41-51-41R FOR NHA	NP		RF
-001M	D2549030610465		. WALL-SIDE used on 040K (25415141R) SEE 25-41-51-41R FOR NHA	NP		RF
-001N	D2549010610065		. WALL-SIDE POST SB 25-1316 used on 040L (25415141P) SEE 25-41-51-41P FOR NHA	NP		RF
-001P	D2549010610065		. WALL-SIDE POST VSB A2-254-25-013 used on 040M (25415141P) SEE 25-41-51-41P FOR NHA	NP		RF
-001Q	R22540117201865		. WALL-SIDE POST VSB A2-254-25-080 used on 040U (25415141R) SEE 25-41-51-41R FOR NHA	NP		RF
010A	A225401234-504		. . WALL ASSY-SIDE,AFT used on 001A			001
-010B	A225401234-556		. . WALL ASSY-SIDE,AFT used on 001B			001
-010C	A225401234-552		. . WALL ASSY-SIDE,AFT used on 001C, 001L, 001Q			001
-010D	A2254012348550		. . WALL ASSY-SIDE,AFT POST SB 25-1314 PRE VSB A2-254-25-013 used on 001D			001

- ITEM NOT ILLUSTRATED

FIG. ITEM	PART NUMBER	AIRLINE STOCK NUMBER	NOMENCLATURE 1234567	EFF CODE	UNITS PER ASSY
-010E	A225401234-562		. . WALL ASSY-SIDE,AFT used on 001E		001
-010F	A225401234-554		. . WALL ASSY-SIDE,AFT used on 001F		001
-010G	A225401234-566		. . WALL ASSY-SIDE,AFT used on 001G		001
-010H	A225401234-532		. . WALL ASSY-SIDE,AFT used on 001H		001
-010J	A225401234-528		. . WALL ASSY-SIDE,AFT used on 001J		001
-010K	A225401234-544		. . WALL ASSY-SIDE,AFT used on 001K		001
-010L	A225401234-548		. . WALL ASSY-SIDE,AFT used on 001M		001
-010M	A225401235-738		. . WALL ASSY-SIDE,AFT POST SB 25-1314 POST VSB A2-254-25-013 used on 001P		001
040A	A225400232-208		. . . FITTING used on 010A, 010B, 010C, 010D, 010E, 010F, 010G, 010H, 010J, 010K, 010L, 010M		002
050A	ABS0704-6-50		. . . SCREW used on 010A, 010B, 010C, 010D, 010E, 010F, 010G, 010H, 010J, 010K, 010L, 010M		004
-060A	NAS1833C08-370		. . . INSERT used on 010A, 010B, 010C, 010D, 010E, 010F, 010G, 010H, 010J, 010K, 010L, 010M		041

- ITEM NOT ILLUSTRATED

FIG. ITEM	PART NUMBER	AIRLINE STOCK NUMBER	NOMENCLATURE 1234567	EFF CODE	UNITS PER ASSY
-070A	NSA5054-08		. . . INSERT used on 010A, 010B, 010C, 010D, 010E, 010F, 010G, 010H, 010J, 010K, 010L, 010M		002
-080A	NAS1835C08		. . . INSERT used on 010A, 010B, 010C, 010D, 010E, 010F, 010G, 010H, 010J, 010K, 010L, 010M		007
-090A	NAS1833C3-370		. . . INSERT used on 010A, 010B, 010C, 010D, 010E, 010F, 010G, 010H, 010J, 010K, 010L, 010M		023
-100A	NSA5054-5		. . . INSERT used on 010A, 010B, 010C, 010D, 010E, 010F, 010G, 010H, 010J, 010K, 010L, 010M		012
-110A	NSA5054-3		. . . INSERT used on 010A, 010B, 010C, 010D, 010E, 010F, 010G, 010H, 010J, 010K, 010L, 010M		003
-120A	NSA5054-4		. . . INSERT used on 010A, 010B, 010C, 010D, 010E, 010F, 010G, 010H, 010J, 010K, 010L, 010M		008
-130A	NSA935405-01		. . . MOUNT used on 010A, 010B, 010C, 010D, 010E, 010F, 010G, 010H, 010J, 010K, 010L, 010M		010
140A	550MBB1		. . HANDLE ASSY PRE VSB A2-254-25-013 used on 001A, 001C, 001D, 001K, 001M, 001N		001

- ITEM NOT ILLUSTRATED

FIG. ITEM	PART NUMBER	AIRLINE STOCK NUMBER	NOMENCLATURE 1234567	EFF CODE	UNITS PER ASSY
-140B	A2254001104		. . HANDLE ASSY POST VSB A2-254-25-013 used on 001P		002
-145A	A225400233-200		. . BUSHING POST VSB A2-254-25-013 used on 001P		004
150A	S7224		. . . SCREW-SPECIAL used on 140A		002
160A	8534		. . . PIN-SECURITY used on 140A		002
170A	8587		. . . WASHER-SPECIAL used on 140A		002
180A	A225401410-504		. . COVER-OXYGEN CONTAIN-ER ASSY used on 001A		001
-180B	A225401410-502		. . COVER-OXYGEN CONTAIN-ER ASSY used on 001B, 001C, 001D, 001E, 001G, 001H, 001J, 001L, 001M, 001N, 001P, 001Q		001
-180C	A225401410-508		. . COVER-OXYGEN CONTAIN-ER ASSY used on 001F, 001K		001
190A	A225400450-204		. . ANGLE used on 001A, 001B, 001C, 001D, 001E, 001F, 001G, 001H, 001J, 001K, 001L, 001M, 001N, 001P, 001Q		001

- ITEM NOT ILLUSTRATED

FIG. ITEM	PART NUMBER	AIRLINE STOCK NUMBER	NOMENCLATURE 1234567	EFF CODE	UNITS PER ASSY
200A	NAS1102-08-5		. . SCREW used on 001A, 001B, 001C, 001D, 001E, 001F, 001G, 001H, 001J, 001K, 001L, 001M, 001N, 001P, 001Q		004
210A	NSA5067-08-1		. . NUT used on 001A, 001B, 001C, 001D, 001E, 001F, 001G, 001H, 001J, 001K, 001L, 001M, 001N, 001P, 001Q		004
220A	A225400450-202		. . ANGLE used on 001A, 001B, 001C, 001D, 001E, 001F, 001G, 001H, 001J, 001K, 001L, 001M, 001N, 001P, 001Q		002
230A	22C150150090004		. . CONTAINER ASSY-OXYGEN used on 001A		001
-230B	G2F212-85		. . CONTAINER ASSY-OXYGEN used on 001B, 001C, 001D, 001E, 001G, 001N, 001P		001
-230C	G2F212-18		. . CONTAINER ASSY-OXYGEN used on 001F, 001K		001
-230D	22C150150320004		. . CONTAINER ASSY-OXYGEN PRE VSB A2-254-25-080 used on 001H, 001J, 001L, 001M		001
-230E	22G150150320400		. . CONTAINER ASSY-OXYGEN POST VSB A2-254-25-080 used on 001Q		001

- ITEM NOT ILLUSTRATED

FIG. ITEM	PART NUMBER	AIRLINE STOCK NUMBER	NOMENCLATURE 1234567	EFF CODE	UNITS PER ASSY
240A	NAS1096-2-5		. . SCREW BUY PN NAS1801-08-5 PRE VSB A2-254-25-080 used on 001A, 001B, 001C, 001D, 001E, 001F, 001G, 001H, 001J, 001K, 001L, 001M, 001N		008
-240B	NAS1801-08-5		. . SCREW used on 001P		012
-240C	NAS1096-2-5		. . SCREW POST VSB A2-254-25-080 used on 001Q		004
-242A	NAS1801-08-6		. . SCREW POST VSB A2-254-25-080 used on 001Q		004
250A	NAS1149CN832R		. . WASHER used on 001A, 001B, 001C, 001D, 001E, 001F, 001G, 001H, 001J, 001K, 001L, 001M, 001N, 001Q		019
-250B	NAS1149CN832R		. . WASHER used on 001P		012
251A	NAS1149CN832R		. . WASHER used on 001A, 001C, 001D, 001K, 001M, 001N		002
260A	A225400451-202		. . STUD used on 001A, 001B, 001C, 001D, 001E, 001F, 001G, 001H, 001J, 001K, 001L, 001M, 001N, 001P, 001Q		002
270A	A225401222-506		. . POST ASSY used on 001A		001

- ITEM NOT ILLUSTRATED

FIG. ITEM	PART NUMBER	AIRLINE STOCK NUMBER	NOMENCLATURE 1234567	EFF CODE	UNITS PER ASSY
-270B	A225401222-500		. . POST ASSY used on 001B, 001D, 001G, 001J, 001K, 001L, 001M, 001N, 001P, 001Q		001
-270C	A225401222-502		. . POST ASSY used on 001C, 001F		001
-270D	A225401222-550		. . POST ASSY used on 001E		001
-270E	A225401222-546		. . POST ASSY used on 001H		001
273A	NAS514P832-4		. . . SCREW used on 270A, 270B, 270C, 270D, 270E		004
275A	NAS1068A08		. . . NUT BUY PN MS21075L08 used on 270A, 270B, 270C, 270D, 270E		004
280A	NAS1096-2-7		. . SCREW BUY PN NAS1801-08-7 used on 001A, 001B, 001C, 001D, 001E, 001F, 001G, 001H, 001J, 001K, 001L, 001M, 001N, 001P, 001Q		005
281A	NAS1096-2-7		. . SCREW BUY PN NAS1801-08-7 used on 001A, 001C, 001D, 001K, 001M, 001N		002
290A	2634DP437-110		. . CAP used on 001A, 001B, 001C, 001D, 001E, 001F, 001G, 001H, 001J, 001K, 001L, 001M, 001N, 001P, 001Q		005

- ITEM NOT ILLUSTRATED

FIG. ITEM	PART NUMBER	AIRLINE STOCK NUMBER	NOMENCLATURE 1234567	EFF CODE	UNITS PER ASSY
300A	NAS1096-3-9		. . SCREW BUY PN NAS1801-3-9 used on 001A, 001B, 001C, 001D, 001E, 001F, 001G, 001H, 001J, 001K, 001L, 001M, 001N, 001P, 001Q		001
310A	A2547577007000		. . DISPENSER-TOILET SEAT COVER used on 001A		001
-310B	A2547577004800		. . DISPENSER-TOILET SEAT COVER used on 001C, 001D, 001E, 001H, 001J, 001L, 001M, 001N, 001P, 001Q A254-75770-048-00		001
320A	NAS1100-08-4		. . SCREW used on 001A, 001C, 001D, 001E, 001H, 001J, 001L, 001M, 001N, 001P, 001Q		002
330A	A2547380208400		. . SUPPORT used on 001A		001
-330B	A2547380206000		. . SUPPORT used on 001C, 001D, 001M, 001N		001
-330C	A2547380205800		. . SUPPORT used on 001K		001
340A	550-33-300MBB		. . HANDLE ASSY used on 001B, 001E, 001F, 001G, 001H, 001J, 001L, 001Q		002
350A	S7224		. . . SCREW-SPECIAL used on 340A		002
360A	8534		. . . PIN-SECURITY used on 340A		002

- ITEM NOT ILLUSTRATED

FIG. ITEM	PART NUMBER	AIRLINE STOCK NUMBER	NOMENCLATURE 1234567	EFF CODE	UNITS PER ASSY
370A	8587		. . . WASHER-SPECIAL used on 340A		002
380A	A225401236-200		. . ANGLE used on 001A, 001B, 001C, 001D, 001E, 001F, 001G, 001H, 001J, 001K, 001L, 001M, 001N, 001P, 001Q		001
390A	NAS1096-2-7		. . SCREW BUY PN NAS1801-08-7 used on 001A, 001B, 001C, 001D, 001E, 001F, 001G, 001H, 001J, 001K, 001L, 001M, 001N, 001P, 001Q		009
400A	NAS1149CN832R		. . WASHER used on 001A, 001B, 001C, 001D, 001E, 001F, 001G, 001H, 001J, 001K, 001L, 001M, 001N, 001P, 001Q		009
410A	A225400208-000		. . DEVICE ASSY-EMERGENCY UNLOCKING,SINGLE DOOR POST SB 25-1316 used on 001N		001
420A	A225400208-200		. . . HOUSING-EMERGENCY UN-LOCKING DEVICE used on 410A		001
430A	A225400208-204		. . . STRIKE-EMERGENCY UN-LOCKING DEVICE used on 410A		001
440A	A225400208-202		. . . PIVOT-EMERGENCY UN-LOCKING DEVICE used on 410A		001
450A	A225400208-210		. . . PIN used on 410A		001

- ITEM NOT ILLUSTRATED

FIG. ITEM	PART NUMBER	AIRLINE STOCK NUMBER	NOMENCLATURE 1234567	EFF CODE	UNITS PER ASSY
460A	SM1275-1KNM04		. . . CATCH-SNAP used on 410A		001
470A	A225400208-208		. . . BOLT used on 410A		001
480A	A225400221-202		. . PLATE POST SB 25-1316 used on 001N		002
490A	NAS514P832-7		. . SCREW POST SB 25-1316 used on 001N		006
500A	NSA5067-08-1		. . NUT POST SB 25-1316 used on 001N		002

- ITEM NOT ILLUSTRATED

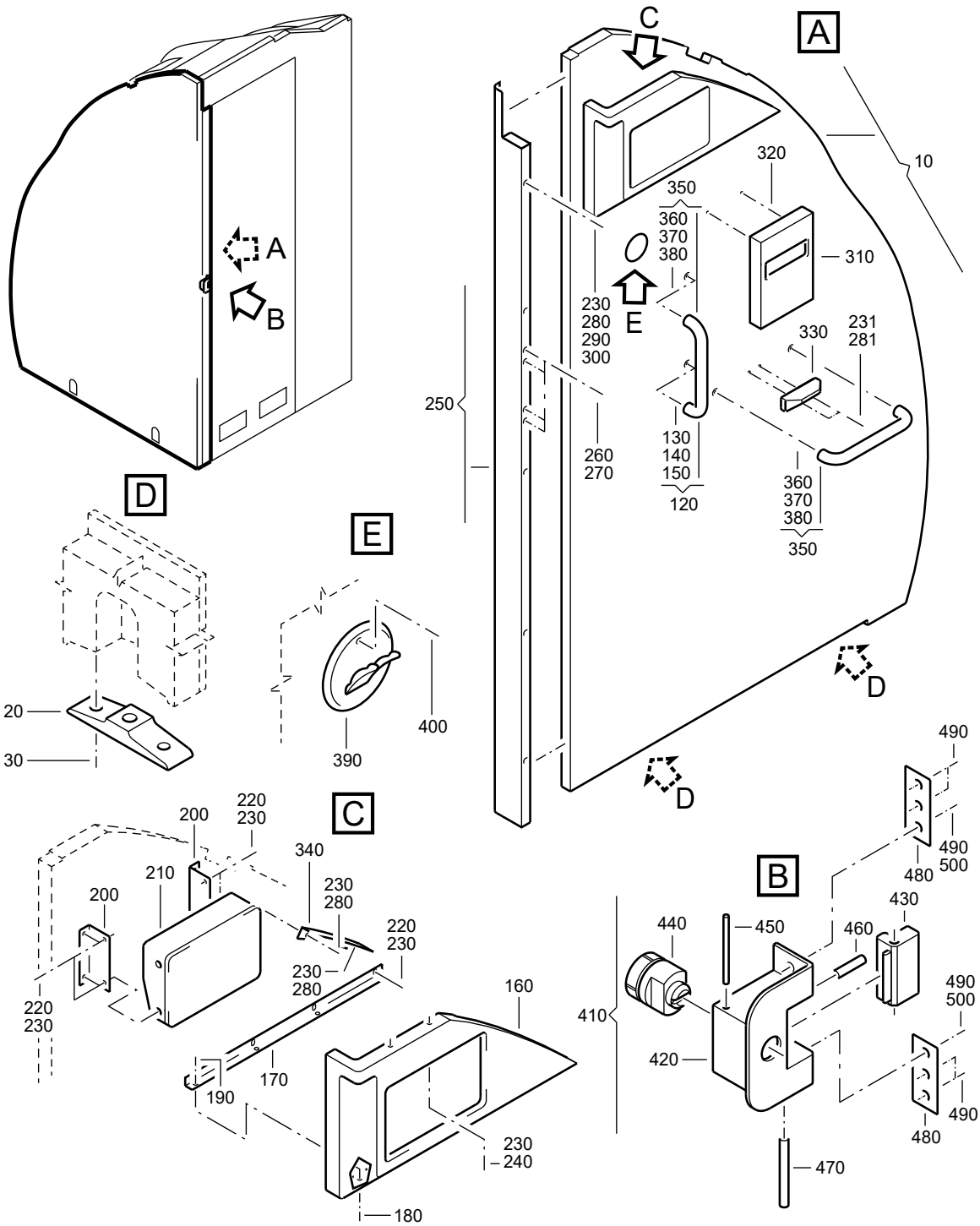

F_PL_254151_06_X_01_00

WALL-SIDE
Figure 06X/EN254151SHEET06X01

FIG. ITEM	PART NUMBER	AIRLINE STOCK NUMBER	NOMENCLATURE 1234567		EFF CODE	UNITS PER ASSY
06X						
-001A	D2549020800665		. WALL-SIDE PRE VSB A2-254-25-042 PRE VSB A2-254-25-054 used on 040C (25415141R) SEE 25-41-51-41R FOR NHA	NP		RF
-001B	D2549030610065		. WALL-SIDE PRE VSB A2-254-25-045 used on 040D (25415141R) SEE 25-41-51-41R FOR NHA	NP		RF
-001C	D2549020510665		. WALL-SIDE used on 040E (25415141R) SEE 25-41-51-41R FOR NHA	NP		RF
-001D	D2549010608865		. WALL-SIDE PRE VSB A2-254-25-080 used on 040F (25415141R) SEE 25-41-51-41R FOR NHA	NP		RF
-001E	D2549010607665		. WALL-SIDE used on 040G (25415141R) SEE 25-41-51-41R FOR NHA	NP		RF
-001F	D2549020800065		. WALL-SIDE PRE VSB A2-254-25-032 used on 040H (25415141R) SEE 25-41-51-41R FOR NHA	NP		RF
-001G	D2549020803465		. WALL-SIDE used on 040A (25415141S) SEE 25-41-51-41S FOR NHA	NP		RF
-001H	D2549010609665		. WALL-SIDE used on 040B (25415141S), 040D (25415141T) SEE 25-41-51-41S FOR NHA SEE 25-41-51-41T FOR NHA	NP		RF

- ITEM NOT ILLUSTRATED

FIG. ITEM	PART NUMBER	AIRLINE STOCK NUMBER	NOMENCLATURE 1234567		EFF CODE	UNITS PER ASSY
-001J	D2549020800465		. WALL-SIDE used on 040A (25415141T) SEE 25-41-51-41T FOR NHA	NP		RF
-001K	D2549010608665		. WALL-SIDE used on 040E (25415141S) SEE 25-41-51-41S FOR NHA	NP		RF
-001L	D2549030614865		. WALL-SIDE used on 040F (25415141S) SEE 25-41-51-41S FOR NHA	NP		RF
-001M	D2549020803265		. WALL-SIDE used on 040G (25415141S) SEE 25-41-51-41S FOR NHA	NP		RF
-001N	D2549030400065		. WALL-SIDE used on 040J (25415141S) SEE 25-41-51-41S FOR NHA	NP		RF
-001P	R22540119600665		. WALL-SIDE PRE VSB A2-254-25-130 POST VSB A2-254-25-042 used on 040P (25415141R) SEE 25-41-51-41R FOR NHA	NP		RF
-001Q	D2549020800065		. WALL-SIDE POST VSB A2-254-25-032 used on 040Q (25415141R) SEE 25-41-51-41R FOR NHA	NP		RF
-001R	R22540119603865		. WALL-SIDE POST VSB A2-254-25-054 used on 040S (25415141R) SEE 25-41-51-41R FOR NHA	NP		RF
-001S	R22540114500865		. WALL-SIDE POST VSB A2-254-25-080 used on 040T (25415141R) SEE 25-41-51-41R FOR NHA	NP		RF

- ITEM NOT ILLUSTRATED

FIG. ITEM	PART NUMBER	AIRLINE STOCK NUMBER	NOMENCLATURE 1234567		EFF CODE	UNITS PER ASSY
-001T	R22540119900465		. WALL-SIDE POST VSB A2-254-25-045 used on 040V (25415141R) SEE 25-41-51-41R FOR NHA	NP		RF
-001U	R22540119605265		. WALL-SIDE POST VSB A2-254-25-130 used on 040W (25415141R) SEE 25-41-51-41R FOR NHA	NP		RF
010A	A225401234-546		. . WALL ASSY-SIDE,AFT PRE VSB A2-254-25-130 used on 001A, 001P, 001R			001
-010B	A225401234-534		. . WALL ASSY-SIDE,AFT used on 001B, 001T			001
-010C	A225401234-538		. . WALL ASSY-SIDE,AFT used on 001C			001
-010D	A225401234-536		. . WALL ASSY-SIDE,AFT used on 001D, 001S			001
010E	A225401234-526		. . WALL ASSY-SIDE,AFT used on 001E			001
-010F	A225401234-560		. . WALL ASSY-SIDE,AFT used on 001N			001
-010G	A225401234-574		. . WALL ASSY-SIDE,AFT used on 001G			001
-010H	A225401234-558		. . WALL ASSY-SIDE,AFT used on 001H			001
-010J	A225401234-576		. . WALL ASSY-SIDE,AFT used on 001J			001
-010K	A225401234-570		. . WALL ASSY-SIDE,AFT used on 001K			001

- ITEM NOT ILLUSTRATED

FIG. ITEM	PART NUMBER	AIRLINE STOCK NUMBER	NOMENCLATURE 1234567	EFF CODE	UNITS PER ASSY
010L	A225401234-572		. . WALL ASSY-SIDE,AFT used on 001L		001
-010M	A225401234-578		. . WALL ASSY-SIDE,AFT used on 001M		001
-010N	A2254012348560		. . WALL ASSY-SIDE,AFT POST SB 25-1314 used on 001F, 001Q		001
-010P	A225401234-774		. . WALL ASSY-SIDE,AFT POST VSB A2-254-25-130 used on 001U		001
020A	A225400232-208		. . . FITTING used on 010A, 010B, 010C, 010D, 010E, 010F, 010G, 010H, 010J, 010K, 010L, 010M, 010N, 010P		002
030A	ABS0704-6-50		. . . SCREW used on 010A, 010B, 010C, 010D, 010E, 010F, 010G, 010H, 010J, 010K, 010L, 010M, 010N, 010P		004
-040A	NAS1833C08-370		. . . INSERT USE AS REQUIRED used on 010A, 010B, 010C, 010D, 010E, 010F, 010G, 010H, 010J, 010K, 010L, 010M, 010N, 010P		AR
-050A	NSA5054-08		. . . INSERT used on 010A, 010B, 010C, 010D, 010E, 010F, 010G, 010H, 010J, 010K, 010L, 010M, 010N, 010P		002

- ITEM NOT ILLUSTRATED

FIG. ITEM	PART NUMBER	AIRLINE STOCK NUMBER	NOMENCLATURE 1234567	EFF CODE	UNITS PER ASSY
-060A	NAS1835C08		. . . INSERT used on 010A, 010B, 010C, 010D, 010E, 010F, 010G, 010H, 010J, 010K, 010L, 010M, 010N, 010P		009
-070A	NAS1833C3-370		. . . INSERT used on 010A, 010B, 010C, 010D, 010E, 010F, 010G, 010H, 010J, 010K, 010L, 010M, 010N, 010P		019
-080A	NSA5054-5		. . . INSERT used on 010A, 010B, 010C, 010D, 010E, 010F, 010G, 010H, 010J, 010K, 010L, 010M, 010N, 010P		012
-090A	NSA5054-3		. . . INSERT used on 010A, 010B, 010C, 010D, 010E, 010F, 010G, 010H, 010J, 010K, 010L, 010M, 010N, 010P		003
-100A	NSA5054-4		. . . INSERT used on 010A, 010B, 010C, 010D, 010E, 010F, 010G, 010H, 010J, 010K, 010L, 010M, 010N, 010P		006
-110A	NSA935405-01		. . . MOUNT used on 010A, 010B, 010C, 010D, 010E, 010F, 010G, 010H, 010J, 010K, 010L, 010M, 010N, 010P		010
120A	550MBB1		. . HANDLE ASSY PRE VSB A2-254-25-130 used on 001A, 001C, 001D, 001E, 001H, 001P, 001R, 001S		001

- ITEM NOT ILLUSTRATED

FIG. ITEM	PART NUMBER	AIRLINE STOCK NUMBER	NOMENCLATURE 1234567	EFF CODE	UNITS PER ASSY
130A	S7224		. . . SCREW-SPECIAL used on 120A		002
140A	8534		. . . PIN-SECURITY used on 120A		002
150A	8587		. . . WASHER-SPECIAL used on 120A		002
160A	A225401410-502		. . COVER-OXYGEN CONTAIN-ER ASSY PRE VSB A2-254-25-130 used on 001A, 001B, 001D, 001E, 001F, 001G, 001H, 001J, 001K, 001L, 001M, 001N, 001P, 001Q, 001R, 001S, 001T		001
-160B	A225401410-520		. . COVER-OXYGEN CONTAIN-ER ASSY used on 001C		001
-160C	A225401410-518		. . COVER-OXYGEN CONTAIN-ER ASSY POST VSB A2-254-25-130 used on 001U		001
170A	A225400450-204		. . ANGLE used on 001A, 001B, 001C, 001D, 001E, 001F, 001G, 001H, 001J, 001K, 001L, 001M, 001N, 001P, 001Q, 001R, 001S, 001T, 001U		001
180A	NAS1102-08-5		. . SCREW used on 001A, 001B, 001C, 001D, 001E, 001F, 001G, 001H, 001J, 001K, 001L, 001M, 001N, 001P, 001Q, 001R, 001S, 001T, 001U		004

- ITEM NOT ILLUSTRATED

FIG. ITEM	PART NUMBER	AIRLINE STOCK NUMBER	NOMENCLATURE 1234567	EFF CODE	UNITS PER ASSY
190A	NSA5067-08-1		. . NUT used on 001A, 001B, 001C, 001D, 001E, 001F, 001G, 001H, 001J, 001K, 001L, 001M, 001N, 001P, 001Q, 001R, 001S, 001T, 001U		004
200A	A225400450-202		. . ANGLE used on 001A, 001B, 001C, 001D, 001E, 001F, 001G, 001H, 001J, 001K, 001L, 001M, 001N, 001P, 001Q, 001R, 001S, 001T, 001U		002
210A	G2F212-85		. . CONTAINER ASSY-OXYGEN PRE VSB A2-254-25-042 PRE VSB A2-254-25-054 PRE VSB A2-254-25-045 used on 001A, 001B, 001F, 001G, 001H, 001J, 001K, 001L, 001Q		001
-210B	G2F212-09		. . CONTAINER ASSY-OXYGEN used on 001C		001
-210C	22C150150320004		. . CONTAINER ASSY-OXYGEN PRE VSB A2-254-25-080 PRE VSB A2-254-25-083 used on 001D, 001E, 001M, 001N		001
-210D	22G220150320400		. . CONTAINER ASSY-OXYGEN PRE VSB A2-254-25-130 POST VSB A2-254-25-042 used on 001P		001
-210E	22G150150320400		. . CONTAINER ASSY-OXYGEN POST VSB A2-254-25-054 POST VSB A2-254-25-045 POST VSB A2-254-25-080 POST VSB A2-254-25-083 used on 001M, 001R, 001S, 001T		001

- ITEM NOT ILLUSTRATED

FIG. ITEM	PART NUMBER	AIRLINE STOCK NUMBER	NOMENCLATURE 1234567	EFF CODE	UNITS PER ASSY
-210F	22G220150460400		. . CONTAINER ASSY-OXYGEN POST VSB A2-254-25-130 used on 001U		001
220A	NAS1096-2-5		. . SCREW PRE VSB A2-254-25-054 PRE VSB A2-254-25-045 PRE VSB A2-254-25-080 PRE VSB A2-254-25-083 BUY PN NAS1801-08-5 used on 001A, 001B, 001C, 001D, 001E, 001F, 001G, 001H, 001J, 001K, 001L, 001M, 001N, 001Q		008
-220B	NAS1096-2-5		. . SCREW POST VSB A2-254-25-054 POST VSB A2-254-25-045 POST VSB A2-254-25-080 POST VSB A2-254-25-083 used on 001M, 001P, 001R, 001S, 001T, 001U		004
-225A	NAS1801-08-6		. . SCREW PRE VSB A2-254-25-130 POST VSB A2-254-25-054 POST VSB A2-254-25-045 POST VSB A2-254-25-080 POST VSB A2-254-25-083 used on 001M, 001P, 001R, 001S, 001T		004
-225B	NAS1801-08-5		. . SCREW POST VSB A2-254-25-130 used on 001U		004
-227A	AN960C8		. . WASHER used on 001P, 001U		004

- ITEM NOT ILLUSTRATED

FIG. ITEM	PART NUMBER	AIRLINE STOCK NUMBER	NOMENCLATURE 1234567	EFF CODE	UNITS PER ASSY
230A	NAS1149CN832R		. . WASHER used on 001A, 001B, 001C, 001D, 001E, 001F, 001G, 001H, 001J, 001K, 001L, 001M, 001N, 001Q, 001R, 001S, 001T		028
-230B	NAS1149CN832R		. . WASHER used on 001P, 001U		024
231A	NAS1149CN832R		. . WASHER PRE VSB A2-254-25-130 used on 001A, 001C, 001D, 001E, 001H, 001P, 001R, 001S		002
240A	A225400451-202		. . STUD used on 001A, 001B, 001C, 001D, 001E, 001F, 001G, 001H, 001J, 001K, 001L, 001M, 001N, 001P, 001Q, 001R, 001S, 001T, 001U		002
250A	A225401222-502		. . POST ASSY PRE VSB A2-254-25-130 used on 001A, 001B, 001E, 001H, 001L, 001P, 001R, 001T		001
-250B	A225401222-500		. . POST ASSY used on 001D, 001F, 001G, 001J, 001M, 001N, 001Q, 001S		001
-250C	A225401222-552		. . POST ASSY used on 001C		001
-250D	A225401222-550		. . POST ASSY used on 001K		001
-250E	A225401222-568		. . POST ASSY POST VSB A2-254-25-130 used on 001U		001

- ITEM NOT ILLUSTRATED

FIG. ITEM	PART NUMBER	AIRLINE STOCK NUMBER	NOMENCLATURE 1234567	EFF CODE	UNITS PER ASSY
260A	NAS514P832-4		. . . SCREW used on 250A, 250B, 250C, 250D, 250E		004
270A	NAS1068A08		. . . NUT BUY PN MS21075L08 used on 250A, 250B, 250C, 250D, 250E		004
280A	NAS1096-2-7		. . SCREW BUY PN NAS1801-08-7 used on 001A, 001B, 001C, 001D, 001E, 001F, 001G, 001H, 001J, 001K, 001L, 001M, 001N, 001P, 001Q, 001R, 001S, 001T, 001U		014
281A	NAS1096-2-7		. . SCREW BUY PN NAS1801-08-7 PRE VSB A2-254-25-130 used on 001A, 001C, 001D, 001E, 001H, 001P, 001R, 001S		002
290A	2634DP437-110		. . CAP used on 001A, 001B, 001C, 001D, 001E, 001F, 001G, 001H, 001J, 001K, 001L, 001M, 001N, 001P, 001Q, 001R, 001S, 001T, 001U		005
300A	NAS1096-3-9		. . SCREW BUY PN NAS1801-3-9 used on 001A, 001B, 001C, 001D, 001E, 001F, 001G, 001H, 001J, 001K, 001L, 001M, 001N, 001P, 001Q, 001R, 001S, 001T, 001U		001

- ITEM NOT ILLUSTRATED

FIG. ITEM	PART NUMBER	AIRLINE STOCK NUMBER	NOMENCLATURE 1234567	EFF CODE	UNITS PER ASSY
310A	A2547577004800		. . DISPENSER-TOILET SEAT COVER PRE VSB A2-254-25-130 used on 001A, 001D, 001E, 001F, 001G, 001H, 001J, 001K, 001L, 001M, 001N, 001P, 001Q, 001R, 001S A254-75770-048-00		001
-310B	A2547577008200		. . DISPENSER-TOILET SEAT COVER POST VSB A2-254-25-130 used on 001U A254-75770-082-00		001
320A	NAS1100-08-4		. . SCREW used on 001A, 001D, 001E, 001F, 001G, 001H, 001J, 001K, 001L, 001M, 001N, 001P, 001Q, 001R, 001S, 001U		002
330A	A2547380206000		. . SUPPORT PRE VSB A2-254-25-130 used on 001A, 001D, 001E, 001H, 001P, 001R, 001S		001
-330B	A2547380209800		. . SUPPORT used on 001C		001
340A	A225401236-200		. . ANGLE used on 001A, 001B, 001C, 001D, 001E, 001F, 001G, 001H, 001J, 001K, 001L, 001M, 001N, 001P, 001Q, 001R, 001S, 001T, 001U		001
350A	550-33-300MBB		. . HANDLE ASSY used on 001B, 001F, 001G, 001J, 001K, 001L, 001M, 001N, 001Q, 001T		002

- ITEM NOT ILLUSTRATED

FIG. ITEM	PART NUMBER	AIRLINE STOCK NUMBER	NOMENCLATURE 1234567	EFF CODE	UNITS PER ASSY
-350B	A2-254-0011-04		. . HANDLE ASSY POST VSB A2-254-25-130 used on 001U		002
360A	S7224		. . . SCREW-SPECIAL used on 350A		002
370A	8534		. . . PIN-SECURITY used on 350A		002
380A	8587		. . . WASHER-SPECIAL used on 350A		002
-385A	A225400233-200		. . BUSHING POST VSB A2-254-25-130 used on 001U		003
390A	AR197-3		. . HOOK-COAT used on 001L		001
400A	NAS514P832-7		. . SCREW used on 001L		001
410A	A225400208-000		. . DEVICE ASSY-EMERGENCY UNLOCKING,SINGLE DOOR POST SB 25-1316 used on 001L		001
420A	A225400208-200		. . . HOUSING-EMERGENCY UN-LOCKING DEVICE used on 410A		001
430A	A225400208-204		. . . STRIKE-EMERGENCY UN-LOCKING DEVICE used on 410A		001
440A	A225400208-202		. . . PIVOT-EMERGENCY UN-LOCKING DEVICE used on 410A		001

- ITEM NOT ILLUSTRATED

FIG. ITEM	PART NUMBER	AIRLINE STOCK NUMBER	NOMENCLATURE 1234567	EFF CODE	UNITS PER ASSY
450A	A225400208-210		. . . PIN used on 410A		001
460A	SM1275-1KNM04		. . . CATCH-SNAP used on 410A		001
470A	A225400208-208		. . . BOLT used on 410A		001
480A	A225400221-202		. . PLATE POST SB 25-1316 used on 001L		002
490A	NAS514P832-7		. . SCREW POST SB 25-1316 used on 001L		006
500A	NSA5067-08-1		. . NUT POST SB 25-1316 used on 001L		002
-510A	A225400216-314		. . STRIP-KICK POST VSB A2-254-25-130 POST VSB A2-254-25-032 used on 001Q, 001U		001

- ITEM NOT ILLUSTRATED

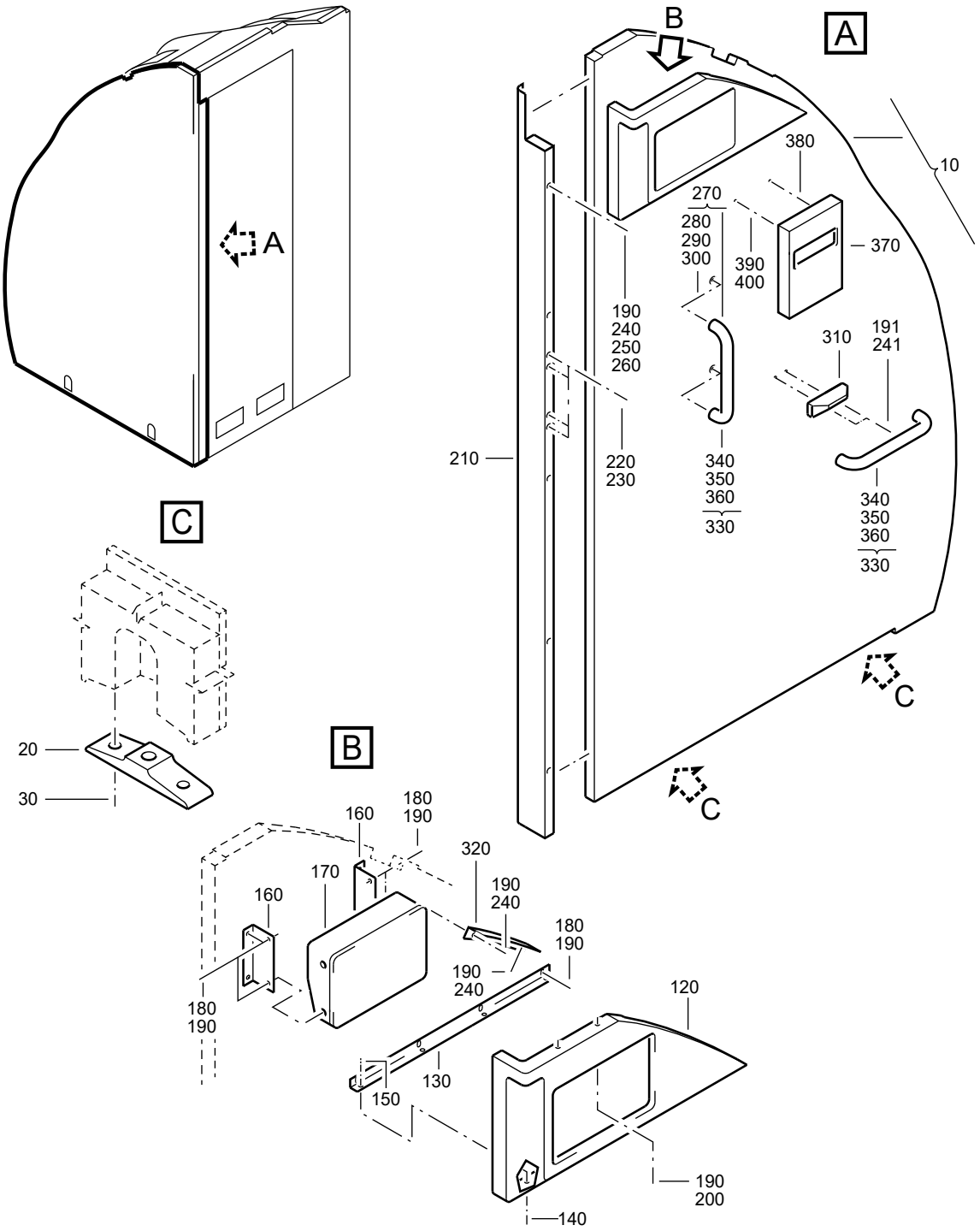

F_PL_254151_06_Y_01_00

WALL-SIDE
Figure 06Y/EN254151SHEET06Y01

FIG. ITEM	PART NUMBER	AIRLINE STOCK NUMBER	NOMENCLATURE 1234567	EFF CODE	UNITS PER ASSY
06Y					
-001A	D2549030612465		. WALL-SIDE NP used on 040H (25415141S) SEE 25-41-51-41S FOR NHA		RF
-001B	D2549020801265		. WALL-SIDE NP used on 040A (25415141U) SEE 25-41-51-41U FOR NHA		RF
-001C	D2549030612065		. WALL-SIDE NP PRE VSB A2-254-25-045 used on 040B (25415141U) SEE 25-41-51-41U FOR NHA		RF
-001D	D2549020800265		. WALL-SIDE NP used on 040C (25415141U) SEE 25-41-51-41U FOR NHA		RF
-001E	D2549030603265		. WALL-SIDE NP used on 040A (25415141V) SEE 25-41-51-41V FOR NHA		RF
-001F	D2549010609265		. WALL-SIDE NP used on 040D (25415141U) SEE 25-41-51-41U FOR NHA		RF
-001G	D2549030402665		. WALL-SIDE NP used on 040B (25415141V) SEE 25-41-51-41V FOR NHA		RF
-001H	D2549030612265		. WALL-SIDE NP PRE VSB A2-254-25-045 used on 040E (25415141T) SEE 25-41-51-41T FOR NHA		RF

- ITEM NOT ILLUSTRATED

FIG. ITEM	PART NUMBER	AIRLINE STOCK NUMBER	NOMENCLATURE 1234567		EFF CODE	UNITS PER ASSY
-001J	D2549030613665		. WALL-SIDE used on 040A (25415141W), 040G (254151420), 040B (25415142A), 040C (25415142E) SEE 25-41-51-41W FOR NHA SEE 25-41-51-420 FOR NHA SEE 25-41-51-42A FOR NHA SEE 25-41-51-42E FOR NHA	NP		RF
-001K	D2549020809465		. WALL-SIDE PRE VSB A2-254-25-054 used on 040B (25415141W), 040C (25415141X), 040B (254151420) SEE 25-41-51-41W FOR NHA SEE 25-41-51-41X FOR NHA SEE 25-41-51-420 FOR NHA	NP		RF
-001L	D2549010612065		. WALL-SIDE used on 040C (25415141W) SEE 25-41-51-41W FOR NHA	NP		RF
-001M	D2549030403465		. WALL-SIDE used on 040D (25415141W), 040E (25415141X), 040A (254151420) SEE 25-41-51-41W FOR NHA SEE 25-41-51-41X FOR NHA SEE 25-41-51-420 FOR NHA	NP		RF
-001N	D2549030402865		. WALL-SIDE used on 040C (25415141V), 040D (25415142A) SEE 25-41-51-41V FOR NHA SEE 25-41-51-42A FOR NHA	NP		RF
-001P	D2549030612165		. WALL-SIDE POST SB 25-1314 used on 040F (25415141U) SEE 25-41-51-41U FOR NHA	NP		RF

- ITEM NOT ILLUSTRATED

FIG. ITEM	PART NUMBER	AIRLINE STOCK NUMBER	NOMENCLATURE 1234567	EFF CODE	UNITS PER ASSY
-001Q	R22540116800865		. WALL-SIDE NP POST VSB A2-254-25-054 used on 040L (25415141W), 040N (25415141X), 040M (254151420) SEE 25-41-51-41W FOR NHA SEE 25-41-51-41X FOR NHA SEE 25-41-51-420 FOR NHA		RF
-001R	R22540119900665		. WALL-SIDE NP POST VSB A2-254-25-045 used on 040K (25415141T) SEE 25-41-51-41T FOR NHA		RF
-001S	R22540161101065		. WALL-SIDE NP POST VSB A2-254-25-045 used on 040G (25415141U) SEE 25-41-51-41U FOR NHA		RF
010A	A225401234-568		. . WALL ASSY-SIDE,AFT used on 001A		001
-010B	A225401234-580		. . WALL ASSY-SIDE,AFT used on 001B		001
-010C	A225401234-534		. . WALL ASSY-SIDE,AFT used on 001C, 001S		001
-010D	A225401234-582		. . WALL ASSY-SIDE,AFT used on 001D		001
-010E	A225401235-500		. . WALL ASSY-SIDE,AFT used on 001E		001
-010F	A225401234-584		. . WALL ASSY-SIDE,AFT used on 001F		001
-010G	A225401235-514		. . WALL ASSY-SIDE,AFT used on 001G		001

- ITEM NOT ILLUSTRATED

FIG. ITEM	PART NUMBER	AIRLINE STOCK NUMBER	NOMENCLATURE 1234567	EFF CODE	UNITS PER ASSY
-010H	A225401234-588		. . WALL ASSY-SIDE,AFT used on 001H, 001R		001
-010J	A225401235-502		. . WALL ASSY-SIDE,AFT used on 001J		001
-010K	A225401235-510		. . WALL ASSY-SIDE,AFT used on 001K, 001Q		001
-010L	A2254012358504		. . WALL ASSY-SIDE,AFT POST SB 25-1314 used on 001L		001
-010M	A225401235-508		. . WALL ASSY-SIDE,AFT used on 001M		001
-010N	A225401235-506		. . WALL ASSY-SIDE,AFT used on 001N		001
-010P	A2254012348534		. . WALL ASSY-SIDE,AFT POST SB 25-1314 used on 001P		001
020A	A225400232-208		. . . FITTING used on 010A, 010B, 010C, 010D, 010E, 010F, 010G, 010H, 010J, 010K, 010L, 010M, 010N, 010P		002
030A	ABS0704-6-50		. . . SCREW used on 010A, 010B, 010C, 010D, 010E, 010F, 010G, 010H, 010J, 010K, 010L, 010M, 010N, 010P		004
-040A	NAS1833C08-370		. . . INSERT used on 010A, 010B, 010C, 010D, 010E, 010F, 010G, 010H, 010J, 010K, 010L, 010M, 010N, 010P		081

- ITEM NOT ILLUSTRATED

FIG. ITEM	PART NUMBER	AIRLINE STOCK NUMBER	NOMENCLATURE 1234567	EFF CODE	UNITS PER ASSY
-050A	NSA5054-08		. . . INSERT used on 010A, 010B, 010C, 010D, 010E		003
-060A	NAS1835C08		. . . INSERT used on 010A, 010B, 010C, 010D, 010E, 010F, 010G, 010H, 010J, 010K		009
-070A	NAS1833C3-370		. . . INSERT used on 010A, 010B, 010C, 010D, 010E, 010F, 010G, 010H, 010J, 010K, 010L, 010M, 010N, 010P		019
-080A	NSA5054-5		. . . INSERT used on 010A, 010B, 010C, 010D, 010E, 010F, 010G, 010H, 010J, 010K, 010L, 010M, 010N, 010P		012
-090A	NSA5054-3		. . . INSERT used on 010A, 010B, 010C, 010D, 010E, 010F, 010G, 010H, 010J, 010K, 010L, 010M, 010N, 010P		003
-100A	NSA5054-4		. . . INSERT used on 010A, 010B, 010C, 010D, 010E, 010F, 010G, 010H, 010J, 010K, 010L, 010M, 010N, 010P		006
-105A	NSA5054-08		. . . INSERT used on 010E, 010G, 010J, 010K, 010L, 010M, 010P		002

- ITEM NOT ILLUSTRATED

FIG. ITEM	PART NUMBER	AIRLINE STOCK NUMBER	NOMENCLATURE 1234567	EFF CODE	UNITS PER ASSY
-110A	NSA935405-01		. . . MOUNT used on 010A, 010B, 010C, 010D, 010E, 010F, 010G, 010H, 010J, 010K, 010L, 010M, 010N, 010P		014
120A	A225401410-502		. . COVER-OXYGEN CONTAIN-ER ASSY used on 001A, 001B, 001C, 001D, 001E, 001F, 001G, 001H, 001J, 001N, 001P, 001R, 001S		001
-120B	A225401410-514		. . COVER-OXYGEN CONTAIN-ER ASSY used on 001K, 001Q		001
-120C	A225401410-510		. . COVER-OXYGEN CONTAIN-ER ASSY used on 001L		001
-120D	A225401410-504		. . COVER-OXYGEN CONTAIN-ER ASSY used on 001M		001
130A	A225400450-204		. . ANGLE used on 001A, 001B, 001C, 001D, 001E, 001F, 001G, 001H, 001J, 001K, 001L, 001M, 001N, 001P, 001Q, 001R, 001S		001
140A	NAS1102-08-5		. . SCREW used on 001A, 001B, 001C, 001D, 001E, 001F, 001G, 001H, 001J, 001K, 001L, 001M, 001N, 001P, 001Q, 001R, 001S		004

- ITEM NOT ILLUSTRATED

FIG. ITEM	PART NUMBER	AIRLINE STOCK NUMBER	NOMENCLATURE 1234567	EFF CODE	UNITS PER ASSY
150A	NSA5067-08-1		. . NUT used on 001A, 001B, 001C, 001D, 001E, 001F, 001G, 001H, 001J, 001K, 001L, 001M, 001N, 001P, 001Q, 001R, 001S		004
160A	A225400450-202		. . ANGLE used on 001A, 001B, 001C, 001D, 001E, 001F, 001G, 001H, 001J, 001K, 001L, 001M, 001N, 001P, 001Q, 001R, 001S		002
170A	G2F212-85		. . CONTAINER ASSY-OXYGEN PRE VSB A2-254-25-045 used on 001A, 001C, 001D, 001G, 001H, 001N, 001P		001
-170B	22C150150320004		. . CONTAINER ASSY-OXYGEN used on 001B, 001E, 001F, 001J		001
-170C	E2F212-58		. . CONTAINER ASSY-OXYGEN PRE VSB A2-254-25-054 used on 001K		001
-170D	G2F212-75		. . CONTAINER ASSY-OXYGEN used on 001L		001
-170E	G2F212-51		. . CONTAINER ASSY-OXYGEN PRE VSB A2-254-25-046 used on 001M		001
-170F	22G220150400400		. . CONTAINER ASSY-OXYGEN POST VSB A2-254-25-054 used on 001Q		001
-170G	22G150150320400		. . CONTAINER ASSY-OXYGEN POST VSB A2-254-25-045 used on 001R, 001S		001

- ITEM NOT ILLUSTRATED

FIG. ITEM	PART NUMBER	AIRLINE STOCK NUMBER	NOMENCLATURE 1234567	EFF CODE	UNITS PER ASSY
-170H	22G150150460400		. . CONTAINER ASSY-OXYGEN POST VSB A2-254-25-046 used on 001M		001
180A	NAS1096-2-5		. . SCREW PRE VSB A2-254-25-054 PRE VSB A2-254-25-045 PRE VSB A2-254-25-046 BUY PN NAS1801-08-5 used on 001A, 001B, 001C, 001D, 001E, 001F, 001G, 001H, 001J, 001K, 001L, 001M, 001N, 001P		008
-180B	NAS1096-2-5		. . SCREW POST VSB A2-254-25-054 POST VSB A2-254-25-045 POST VSB A2-254-25-046 BUY PN NAS1801-08-5 used on 001M, 001Q, 001R, 001S		004
-182A	NAS1801-08-6		. . SCREW POST VSB A2-254-25-054 POST VSB A2-254-25-045 POST VSB A2-254-25-046 used on 001M, 001Q, 001R, 001S		004
190A	NAS1149CN832R		. . WASHER used on 001A, 001B, 001C, 001D, 001E, 001F, 001G, 001H, 001J, 001K, 001L, 001M, 001N, 001P, 001Q, 001R, 001S		024
191A	NAS1149CN832R		. . WASHER used on 001A, 001F, 001G, 001M, 001N		002

- ITEM NOT ILLUSTRATED

FIG. ITEM	PART NUMBER	AIRLINE STOCK NUMBER	NOMENCLATURE 1234567	EFF CODE	UNITS PER ASSY
200A	A225400451-202		. . STUD used on 001A, 001B, 001C, 001D, 001E, 001F, 001G, 001H, 001J, 001K, 001L, 001M, 001N, 001P, 001Q, 001R, 001S		002
210A	A225401222-500		. . POST ASSY used on 001A, 001D, 001E, 001F, 001H, 001J, 001N, 001R		001
-210B	A225401222-534		. . POST ASSY used on 001B		001
-210C	A225401222-502		. . POST ASSY used on 001C, 001P, 001S		001
-210D	A225401222-550		. . POST ASSY used on 001G		001
-210E	A225401222-538		. . POST ASSY used on 001K, 001Q		001
-210F	A225401222-530		. . POST ASSY used on 001L		001
-210G	A225401222-528		. . POST ASSY used on 001M		001
220A	NAS514P832-4		. . . SCREW used on 210A, 210B, 210C, 210D, 210E, 210F, 210G		004
230A	NAS1068A08		. . . NUT BUY PN MS21075L08 used on 210A, 210B, 210C, 210D, 210E, 210F, 210G		004

- ITEM NOT ILLUSTRATED

FIG. ITEM	PART NUMBER	AIRLINE STOCK NUMBER	NOMENCLATURE 1234567	EFF CODE	UNITS PER ASSY
240A	NAS1096-2-7		. . SCREW BUY PN NAS1801-08-7 used on 001A, 001B, 001C, 001D, 001E, 001F, 001G, 001H, 001J, 001K, 001L, 001M, 001N, 001P, 001Q, 001R, 001S		014
241A	NAS1096-2-7		. . SCREW BUY PN NAS1801-08-7 used on 001A, 001F, 001G, 001M, 001N		002
250A	2634DP437-110		. . CAP used on 001A, 001B, 001C, 001D, 001E, 001F, 001G, 001H, 001J, 001K, 001L, 001M, 001N, 001P, 001Q, 001R, 001S		005
260A	NAS1096-3-9		. . SCREW BUY PN NAS1801-3-9 used on 001A, 001B, 001C, 001D, 001E, 001F, 001G, 001H, 001J, 001K, 001L, 001M, 001N, 001P, 001Q, 001R, 001S		001
270A	550MBB1		. . HANDLE ASSY used on 001A, 001F, 001G, 001M, 001N		001
280A	S7224		. . . SCREW-SPECIAL used on 270A		001
290A	8534		. . . PIN-SECURITY used on 270A		001
300A	8587		. . . WASHER-SPECIAL used on 270A		001
310A	A2547380206000		. . SUPPORT used on 001A, 001F, 001G, 001N		001

- ITEM NOT ILLUSTRATED

FIG. ITEM	PART NUMBER	AIRLINE STOCK NUMBER	NOMENCLATURE 1234567	EFF CODE	UNITS PER ASSY
-310B	A2547380208400		. . SUPPORT used on 001M		001
320A	A225401236-200		. . ANGLE used on 001A, 001B, 001C, 001D, 001E, 001F, 001G, 001H, 001J, 001K, 001L, 001M, 001N, 001P, 001Q, 001R, 001S		001
330A	550-33-300MBB		. . HANDLE ASSY used on 001B, 001C, 001D, 001E, 001H, 001J, 001K, 001L, 001P, 001Q, 001R, 001S		002
340A	S7224		. . . SCREW-SPECIAL used on 330A		002
350A	8534		. . . PIN-SECURITY used on 330A		002
360A	8587		. . . WASHER-SPECIAL used on 330A		002
370A	A2547577004800		. . DISPENSER-TOILET SEAT COVER used on 001B, 001E, 001F, 001G, 001J A254-75770-048-00		001
-370B	155-11114-1A		. . DISPENSER-TOILET SEAT COVER used on 001L		001
-370C	A2547577007000		. . DISPENSER-TOILET SEAT COVER used on 001M		001
380A	NAS1100-08-4		. . SCREW used on 001B, 001E, 001F, 001G, 001J, 001M		002

- ITEM NOT ILLUSTRATED

FIG. ITEM	PART NUMBER	AIRLINE STOCK NUMBER	NOMENCLATURE 1234567	EFF CODE	UNITS PER ASSY
390A	NAS514P832-7		. . SCREW used on 001L		004
400A	0-123-000700000		. . WASHER used on 001L		004

- ITEM NOT ILLUSTRATED

THIS PAGE IS INTENTIONALLY LEFT BLANK

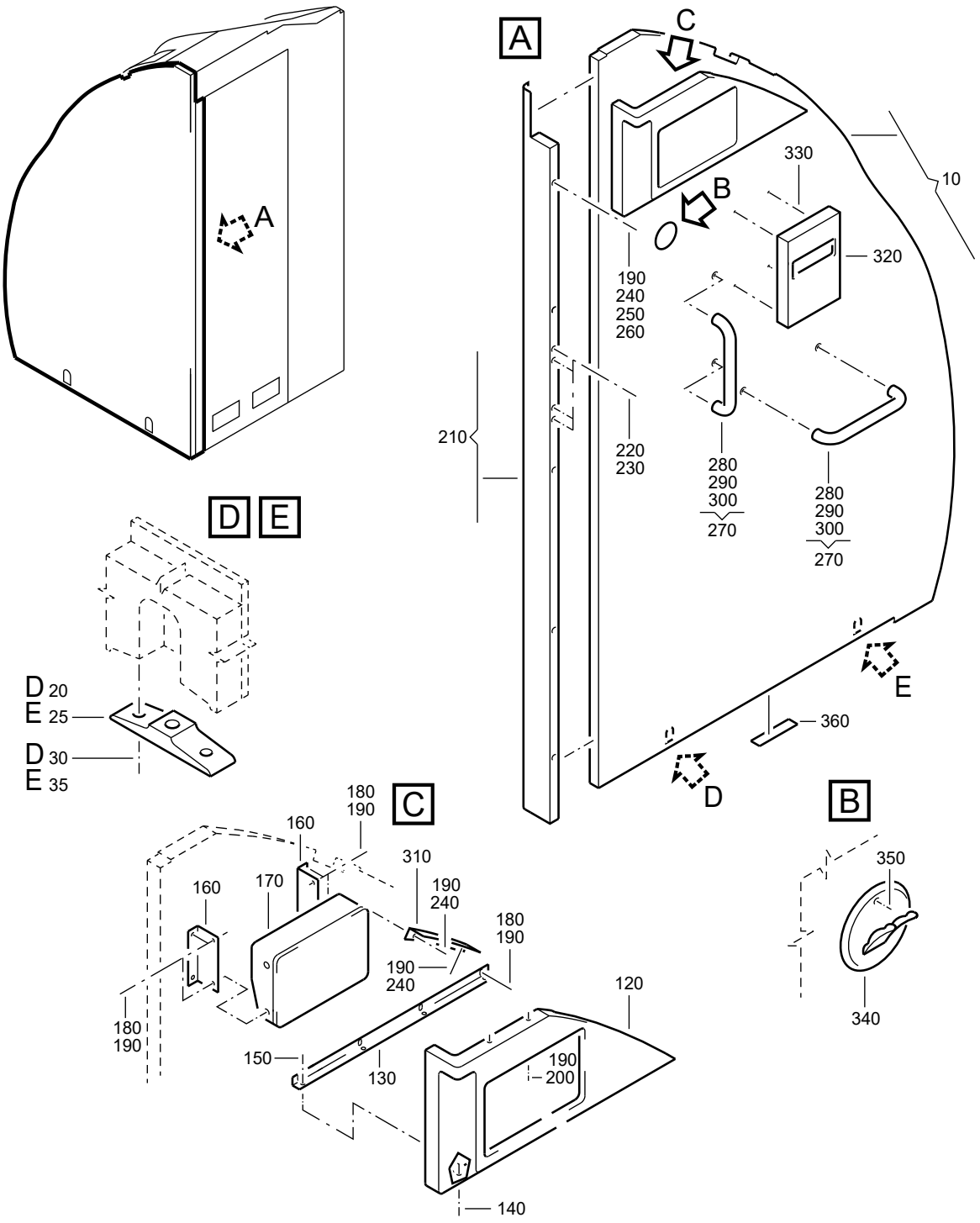

F_PL_254151_06_Z_01_00

WALL-SIDE
Figure 06Z/EN254151SHEET06Z01

FIG. ITEM	PART NUMBER	AIRLINE STOCK NUMBER	NOMENCLATURE 1234567		EFF CODE	UNITS PER ASSY
06Z						
-001A	D2549030403065		. WALL-SIDE PRE VSB A2-254-25-054 PRE VSB A2-254-25-045 used on 040E (25415141W), 040B (25415141X), 040J (254151420) SEE 25-41-51-41W FOR NHA SEE 25-41-51-41X FOR NHA SEE 25-41-51-420 FOR NHA	NP		RF
-001B	D2549020809065		. WALL-SIDE PRE VSB A2-254-25-020 used on 040F (25415141V), 040A (25415142B), 040D(25415142D) SEE 25-41-51-41V FOR NHA SEE 25-41-51-42B FOR NHA SEE 25-41-51-42D FOR NHA	NP		RF
-001C	D2549020804065		. WALL-SIDE used on 040G (25415141V), 040C (25415141Y), 040F (25415142B), 040A (25415142D), 040D (25415142F) SEE 25-41-51-41V FOR NHA SEE 25-41-51-41Y FOR NHA SEE 25-41-51-42B FOR NHA SEE 25-41-51-42D FOR NHA SEE 25-41-51-42F FOR NHA	NP		RF
-001D	D2549030401465		. WALL-SIDE PRE VSB A2-254-25-045 used on 040H (25415141V), 040J (25415141Y), 040G(25415142A), 040K (25415142B) SEE 25-41-51-41V FOR NHA SEE 25-41-51-41Y FOR NHA SEE 25-41-51-42A FOR NHA SEE 25-41-51-42B FOR NHA	NP		RF

- ITEM NOT ILLUSTRATED

FIG. ITEM	PART NUMBER	AIRLINE STOCK NUMBER	NOMENCLATURE 1234567	EFF CODE	UNITS PER ASSY
-001E	D2549020802465		. WALL-SIDE NP used on 040B (25415141J), 040J (25415141V), 040D(25415141Y) SEE 25-41-51-41J FOR NHA SEE 25-41-51-41V FOR NHA SEE 25-41-51-41Y FOR NHA		RF
-001F	D2549020714065		. WALL-SIDE NP PRE VSB A2-254-25-054 used on 040K (25415141V), 040G (25415141Y) SEE 25-41-51-41V FOR NHA SEE 25-41-51-41Y FOR NHA		RF
-001G	D2549020808465		. WALL-SIDE NP used on 040H (25415141W), 040H (25415141X) SEE 25-41-51-41W FOR NHA SEE 25-41-51-41X FOR NHA		RF
-001H	D2549010611065		. WALL-SIDE NP used on 040L (25415141V), 040D (25415141X), 040F(254151420), 040C (25415142A), 040B (25415142B), 040B(25415142D) SEE 25-41-51-41V FOR NHA SEE 25-41-51-41X FOR NHA SEE 25-41-51-420 FOR NHA SEE 25-41-51-42A FOR NHA SEE 25-41-51-42B FOR NHA SEE 25-41-51-42D FOR NHA		RF

- ITEM NOT ILLUSTRATED

FIG. ITEM	PART NUMBER	AIRLINE STOCK NUMBER	NOMENCLATURE 1234567		EFF CODE	UNITS PER ASSY
-001J	D2549020807665		. WALL-SIDE PRE VSB A2-254-25-020 PRE VSB A2-254-25-054 used on 040A (25415141Y), 040K (25415142A), 040B(25415142C), 040D (25415142G) SEE 25-41-51-41Y FOR NHA SEE 25-41-51-42A FOR NHA SEE 25-41-51-42C FOR NHA SEE 25-41-51-42G FOR NHA	NP		RF
-001K	D2549030404265		. WALL-SIDE used on 040H (25415141Y), 040H (25415141Z) SEE 25-41-51-41Y FOR NHA SEE 25-41-51-41Z FOR NHA	NP		RF
-001L	D2549020810065		. WALL-SIDE PRE VSB A2-254-25-080 used on 040F (25415141Y), 040M (25415142A), 040J (25415142B) SEE 25-41-51-41Y FOR NHA SEE 25-41-51-42A FOR NHA SEE 25-41-51-42B FOR NHA	NP		RF
-001M	D2549010613865		. WALL-SIDE used on 040J (25415141Z), 040L (25415142A) SEE 25-41-51-41Z FOR NHA SEE 25-41-51-42A FOR NHA	NP		RF
-001N	D2549030401565		. WALL-SIDE used on 040M (25415141V), 040K (25415141Y) SEE 25-41-51-41V FOR NHA SEE 25-41-51-41Y FOR NHA	NP		RF

- ITEM NOT ILLUSTRATED

FIG. ITEM	PART NUMBER	AIRLINE STOCK NUMBER	NOMENCLATURE 1234567		EFF CODE	UNITS PER ASSY
-001P	R22540164300065		. WALL-SIDE POST VSB A2-254-25-020 used on 040N (25415142A) SEE 25-41-51-42A FOR NHA	NP		RF
-001Q	R22540163900065		. WALL-SIDE POST VSB A2-254-25-020 used on 040N (25415142B), 040P (25415142D) SEE 25-41-51-42B FOR NHA SEE 25-41-51-42D FOR NHA	NP		RF
-001R	R22540160900065		. WALL-SIDE POST VSB A2-254-25-054 used on 040L (25415141Y) SEE 25-41-51-41Y FOR NHA	NP		RF
-001S	R22540164300265		. WALL-SIDE POST VSB A2-254-25-054 used on 040N (25415142G) SEE 25-41-51-42G FOR NHA	NP		RF
-001T	R22540116801065		. WALL-SIDE POST VSB A2-254-25-054 used on 040N (25415141X) SEE 25-41-51-41X FOR NHA	NP		RF
-001U	R22540164700065		. WALL-SIDE POST VSB A2-254-25-080 used on 040M (25415141Y), 040P (25415142A), 040P (25415142B) SEE 25-41-51-41Y FOR NHA SEE 25-41-51-42A FOR NHA SEE 25-41-51-42B FOR NHA	NP		RF

- ITEM NOT ILLUSTRATED

FIG. ITEM	PART NUMBER	AIRLINE STOCK NUMBER	NOMENCLATURE 1234567	EFF CODE	UNITS PER ASSY
-001V	R22540119900865		. WALL-SIDE NP POST VSB A2-254-25-045 used on 040M (25415141W), 040N (254151420) SEE 25-41-51-41W FOR NHA SEE 25-41-51-420 FOR NHA		RF
-001W	R22540161101265		. WALL-SIDE NP POST VSB A2-254-25-045 used on 040Q (25415142B) SEE 25-41-51-42B FOR NHA		RF
010A	A225401235-512		. . WALL ASSY-SIDE,AFT used on 001A, 001T, 001V		001
-010B	A225401235-522		. . WALL ASSY-SIDE,AFT PRE VSB A2-254-25-020 used on 001B		001
-010C	A225401235-516		. . WALL ASSY-SIDE,AFT used on 001C		001
-010D	A225401235-530		. . WALL ASSY-SIDE,AFT used on 001D, 001W		001
-010E	A225401234-758		. . WALL ASSY-SIDE,AFT POST SB 25-1551 used on 001E		001
-010F	A225401235-532		. . WALL ASSY-SIDE,AFT used on 001F, 001R		001
-010G	A225401235-536		. . WALL ASSY-SIDE,AFT PRE VSB A2-254-25-020 used on 001S		001
-010H	A225401235-538		. . WALL ASSY-SIDE,AFT used on 001H		001
-010J	A225401235-542		. . WALL ASSY-SIDE,AFT used on 001K		001

- ITEM NOT ILLUSTRATED

FIG. ITEM	PART NUMBER	AIRLINE STOCK NUMBER	NOMENCLATURE 1234567	EFF CODE	UNITS PER ASSY
-010K	A225401235-546		. . WALL ASSY-SIDE,AFT used on 001L, 001U		001
-010L	A2254012358556		. . WALL ASSY-SIDE,AFT POST SB 25-1314 used on 001M		001
-010M	A2254012358536		. . WALL ASSY-SIDE,AFT POST SB 25-1314 used on 001G		001
-010N	A2254012358530		. . WALL ASSY-SIDE,AFT POST SB 25-1314 used on 001N		001
-010P	A225401235-742		. . WALL ASSY-SIDE,AFT POST VSB A2-254-25-020 used on 001P		001
-010Q	A225401235-740		. . WALL ASSY-SIDE,AFT POST VSB A2-254-25-020 used on 001Q		001
020A	A225400232-208		. . . FITTING used on 010A, 010B, 010C, 010D, 010E, 010F, 010G, 010H, 010J, 010K, 010L, 010M, 010N, 010P, 010Q		001
025A	A225400232-216		. . . FITTING used on 010A, 010B, 010C, 010D, 010E, 010F, 010G, 010H, 010J, 010K, 010L, 010M, 010N, 010P, 010Q		001
027A	A225400236-550		. . . BRACKET POST VSB A2-254-25-020 used on 010P, 010Q		001

- ITEM NOT ILLUSTRATED

FIG. ITEM	PART NUMBER	AIRLINE STOCK NUMBER	NOMENCLATURE 1234567	EFF CODE	UNITS PER ASSY
030A	ABS0704-6-50		. . . SCREW used on 010A, 010B, 010C, 010D, 010E, 010F, 010G, 010H, 010J, 010K, 010L, 010M, 010N, 010P, 010Q		002
035A	ABS0705-6-50		. . . SCREW used on 010A, 010B, 010C, 010D, 010E, 010F, 010G, 010H, 010J, 010K, 010L, 010M, 010N, 010P, 010Q		002
-040A	NAS1833C08-370		. . . INSERT used on 010A, 010B, 010C, 010D, 010E, 010F, 010G, 010H, 010J, 010K, 010L, 010M, 010N, 010P, 010Q		083
-050A	NAS1833C3-370		. . . INSERT used on 010A, 010B, 010C, 010D, 010E, 010F, 010G, 010H, 010J, 010K, 010L, 010M, 010N, 010P, 010Q		020
-060A	NAS1835C08		. . . INSERT used on 010A, 010B, 010C, 010D, 010E, 010F, 010G, 010H, 010J, 010K, 010L, 010M, 010N, 010P, 010Q		009
-070A	NSA5054-5		. . . INSERT used on 010A, 010B, 010C, 010D, 010E, 010F, 010G, 010H, 010J, 010K, 010L, 010M, 010N, 010P, 010Q		012

- ITEM NOT ILLUSTRATED

FIG. ITEM	PART NUMBER	AIRLINE STOCK NUMBER	NOMENCLATURE 1234567	EFF CODE	UNITS PER ASSY
-080A	NSA5054-3		. . . INSERT used on 010A, 010B, 010C, 010D, 010E, 010F, 010G, 010H, 010J, 010K, 010L, 010M, 010N, 010P, 010Q		003
-090A	NSA5054-4		. . . INSERT used on 010A, 010B, 010C, 010D, 010E, 010F, 010G, 010H, 010J, 010K, 010L, 010M, 010N, 010P, 010Q		006
-100A	NSA5054-08		. . . INSERT used on 010A, 010B, 010C, 010D, 010E, 010F, 010G, 010H, 010J, 010K, 010L, 010M, 010N, 010P, 010Q		002
-110A	NSA935405-01		. . . MOUNT used on 010A, 010B, 010C, 010D, 010E, 010F, 010G, 010H, 010J, 010K, 010L, 010M, 010N, 010P, 010Q		010
120A	A225401410-502		. . COVER-OXYGEN CONTAIN-ER ASSY used on 001A, 001B, 001C, 001D, 001F, 001G, 001H, 001J, 001K, 001L, 001M, 001N, 001P, 001Q, 001R, 001S, 001T, 001U, 001V, 001W		001
-120B	A225401410-520		. . COVER-OXYGEN CONTAIN-ER ASSY used on 001E		001

- ITEM NOT ILLUSTRATED

FIG. ITEM	PART NUMBER	AIRLINE STOCK NUMBER	NOMENCLATURE 1234567	EFF CODE	UNITS PER ASSY
130A	A225400450-204		. . ANGLE used on 001A, 001B, 001C, 001D, 001E, 001F, 001G, 001H, 001J, 001K, 001L, 001M, 001N, 001P, 001Q, 001R, 001S, 001T, 001U, 001V, 001W		001
140A	NAS1102-08-5		. . SCREW used on 001A, 001B, 001C, 001D, 001E, 001F, 001G, 001H, 001J, 001K, 001L, 001M, 001N, 001P, 001Q, 001R, 001S, 001T, 001U, 001V, 001W		004
150A	NSA5067-08-1		. . NUT used on 001A, 001B, 001C, 001D, 001E, 001F, 001G, 001H, 001J, 001K, 001L, 001M, 001N, 001P, 001Q, 001R, 001S, 001T, 001U, 001V, 001W		004
160A	A225400450-202		. . ANGLE used on 001A, 001B, 001C, 001D, 001E, 001F, 001G, 001H, 001J, 001K, 001L, 001M, 001N, 001P, 001Q, 001R, 001S, 001T, 001U, 001V, 001W		002
170A	G2F212-85		. . CONTAINER ASSY-OXYGEN PRE VSB A2-254-25-054 PRE VSB A2-254-25-045 PRE VSB A2-254-25-083 used on 001A, 001C, 001D, 001G, 001K, 001M, 001N		001
-170B	22C150150320004		. . CONTAINER ASSY-OXYGEN PRE VSB A2-254-25-054 PRE VSB A2-254-25-080 used on 001B, 001F, 001H, 001J, 001L, 001P, 001Q		001

- ITEM NOT ILLUSTRATED

FIG. ITEM	PART NUMBER	AIRLINE STOCK NUMBER	NOMENCLATURE 1234567	EFF CODE	UNITS PER ASSY
-170C	22C220150040004		. . CONTAINER ASSY-OXYGEN used on 001E		001
-170D	22G150150320400		. . CONTAINER ASSY-OXYGEN POST VSB A2-254-25-054 POST VSB A2-254-25-045 POST VSB A2-254-25-080 POST VSB A2-254-25-083 used on 001G, 001R, 001S, 001U, 001V, 001W		001
-170E	22G220150400400		. . CONTAINER ASSY-OXYGEN POST VSB A2-254-25-054 used on 001T		001
180A	NAS1096-2-5		. . SCREW PRE VSB A2-254-25-054 PRE VSB A2-254-25-045 PRE VSB A2-254-25-080 PRE VSB A2-254-25-083 BUY PN NAS1801-08-5 used on 001A, 001B, 001C, 001D, 001E, 001F, 001G, 001H, 001J, 001K, 001L, 001M, 001N, 001P, 001Q		008
-180B	NAS1096-2-5		. . SCREW POST VSB A2-254-25-054 POST VSB A2-254-25-045 POST VSB A2-254-25-080 POST VSB A2-254-25-083 BUY PN NAS1801-08-5 used on 001G, 001R, 001S, 001T, 001U, 001V, 001W		004

- ITEM NOT ILLUSTRATED

FIG. ITEM	PART NUMBER	AIRLINE STOCK NUMBER	NOMENCLATURE 1234567	EFF CODE	UNITS PER ASSY
-182A	NAS1801-08-6		. . SCREW POST VSB A2-254-25-054 POST VSB A2-254-25-045 POST VSB A2-254-25-080 POST VSB A2-254-25-083 used on 001G, 001R, 001S, 001T, 001U, 001V, 001W		004
190A	NAS1149CN832R		. . WASHER used on 001A, 001B, 001C, 001D, 001E, 001F, 001G, 001H, 001J, 001K, 001L, 001M, 001N, 001P, 001Q, 001R, 001S, 001T, 001U, 001V, 001W		024
200A	A225400451-202		. . STUD used on 001A, 001B, 001C, 001D, 001E, 001F, 001G, 001H, 001J, 001K, 001L, 001M, 001N, 001P, 001Q, 001R, 001S, 001T, 001U, 001V, 001W		002
210A	A225401222-502		. . POST ASSY used on 001A, 001D, 001K, 001N, 001T, 001V, 001W		001
-210B	A225401222-500		. . POST ASSY used on 001B, 001G, 001J, 001L, 001M, 001P, 001Q, 001S, 001U		001
-210C	A225401222-550		. . POST ASSY used on 001C		001
-210D	A225401222-564		. . POST ASSY POST SB 25-1551 used on 001E		001
-210E	A225401222-526		. . POST ASSY used on 001F, 001R		001

- ITEM NOT ILLUSTRATED

FIG. ITEM	PART NUMBER	AIRLINE STOCK NUMBER	NOMENCLATURE 1234567	EFF CODE	UNITS PER ASSY
-210F	A225401222-546		. . POST ASSY used on 001H		001
220A	NAS514P832-4		. . . SCREW used on 210A, 210B, 210C, 210D, 210E, 210F		004
230A	NAS1068A08		. . . NUT BUY PN MS21075L08 used on 210A, 210B, 210C, 210D, 210E, 210F		004
240A	NAS1096-2-7		. . SCREW BUY PN NAS1801-08-7 used on 001A, 001B, 001C, 001D, 001E, 001F, 001G, 001H, 001J, 001K, 001L, 001M, 001N, 001P, 001Q, 001R, 001S, 001T, 001U, 001V, 001W		014
250A	2634DP437-110		. . CAP used on 001A, 001B, 001C, 001D, 001E, 001F, 001G, 001H, 001J, 001K, 001L, 001M, 001N, 001P, 001Q, 001R, 001S, 001T, 001U, 001V, 001W		005
260A	NAS1096-3-9		. . SCREW BUY PN NAS1801-3-9 used on 001A, 001B, 001C, 001D, 001E, 001F, 001G, 001H, 001J, 001K, 001L, 001M, 001N, 001P, 001Q, 001R, 001S, 001T, 001U, 001V, 001W		001

- ITEM NOT ILLUSTRATED

FIG. ITEM	PART NUMBER	AIRLINE STOCK NUMBER	NOMENCLATURE 1234567	EFF CODE	UNITS PER ASSY
270A	550-33-300MBB		. . HANDLE ASSY used on 001A, 001B, 001C, 001D, 001E, 001F, 001G, 001H, 001J, 001K, 001L, 001M, 001N, 001P, 001Q, 001R, 001S, 001T, 001U, 001V, 001W		002
280A	S7224		. . . SCREW-SPECIAL used on 270A		001
290A	8534		. . . PIN-SECURITY used on 270A		001
300A	8587		. . . WASHER-SPECIAL used on 270A		001
310A	A225401236-200		. . ANGLE used on 001A, 001B, 001C, 001D, 001E, 001F, 001G, 001H, 001J, 001K, 001L, 001M, 001N, 001P, 001Q, 001R, 001S, 001T, 001U, 001V, 001W		001
320A	A2547577004800		. . DISPENSER-TOILET SEAT COVER used on 001B, 001C, 001F, 001H, 001L, 001M, 001Q, 001R, 001U A254-75770-048-00		001
-320B	A2547577008000		. . DISPENSER-TOILET SEAT COVER used on 001E		001
330A	NAS1100-08-4		. . SCREW used on 001B, 001C, 001E, 001F, 001H, 001L, 001M, 001Q, 001R, 001U		002
340A	AR197-3		. . HOOK-COAT used on 001B, 001E, 001Q		001

- ITEM NOT ILLUSTRATED

FIG. ITEM	PART NUMBER	AIRLINE STOCK NUMBER	NOMENCLATURE 1234567	EFF CODE	UNITS PER ASSY
350A	NAS514P832-7		. . SCREW used on 001B, 001E, 001Q		001
360A	A225400231-362		. . STRIP-REINFORCING USE AS REQUIRED POST SB 25-1314 used on 001G, 001M		AR

- ITEM NOT ILLUSTRATED

THIS PAGE IS INTENTIONALLY LEFT BLANK

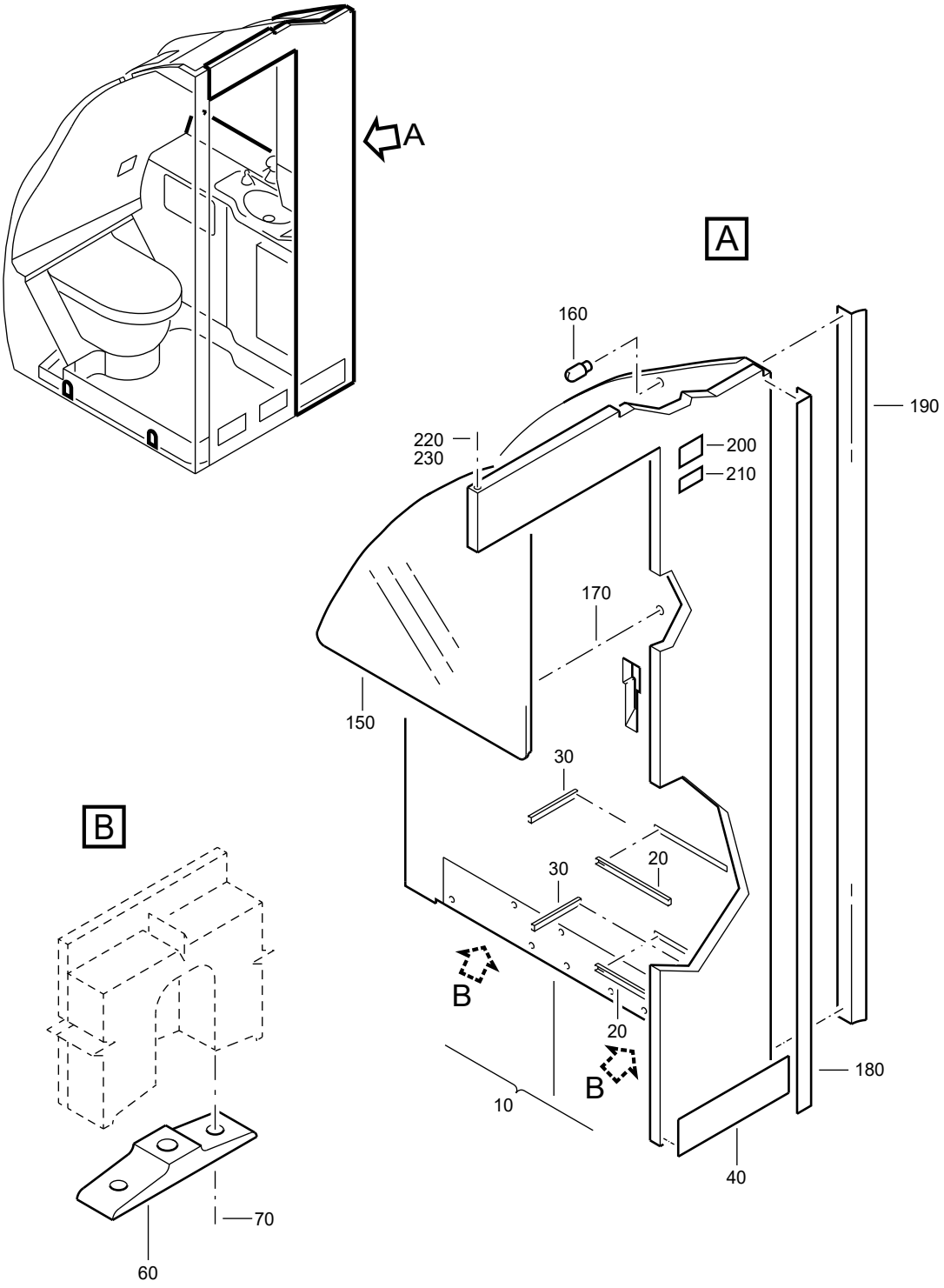

F_PL_254151_07_0_01_00

HOUSING
Figure 7/EN254151SHEET07001

FIG. ITEM	PART NUMBER	AIRLINE STOCK NUMBER	NOMENCLATURE 1234567		EFF CODE	UNITS PER ASSY
07						
-001A	D2549010500066		. HOUSING used on 050A (254151010), 050D (25415101A) SEE 25-41-51-010 FOR NHA SEE 25-41-51-01A FOR NHA	NP		RF
-001B	D2549020500066		. HOUSING used on 050B (254151010), 050J (25415101A), 050F(25415101B), 050C (25415101E), 050J (25415101F) SEE 25-41-51-010 FOR NHA SEE 25-41-51-01A FOR NHA SEE 25-41-51-01B FOR NHA SEE 25-41-51-01E FOR NHA SEE 25-41-51-01F FOR NHA	NP		RF
-001C	D2549020500266		. HOUSING used on 050C (254151010), 050H (25415101B) SEE 25-41-51-010 FOR NHA SEE 25-41-51-01B FOR NHA	NP		RF
-001D	D2549010500466		. HOUSING used on 050D (254151010), 050C (25415101A) SEE 25-41-51-010 FOR NHA SEE 25-41-51-01A FOR NHA	NP		RF
-001E	D2549010500666		. HOUSING used on 050E (254151010), 050B (25415101A) SEE 25-41-51-010 FOR NHA SEE 25-41-51-01A FOR NHA	NP		RF

- ITEM NOT ILLUSTRATED

FIG. ITEM	PART NUMBER	AIRLINE STOCK NUMBER	NOMENCLATURE 1234567	EFF CODE	UNITS PER ASSY
-001F	D2549010501866		. HOUSING NP used on 050E (25415101A), 050A (25415101C), 050H(25415101E), 050B (25415101F) SEE 25-41-51-01A FOR NHA SEE 25-41-51-01C FOR NHA SEE 25-41-51-01E FOR NHA SEE 25-41-51-01F FOR NHA		RF
-001G	D2549010502266		. HOUSING NP used on 050A (25415101B), 050G (25415101C), 050D (25415101D), 050G (25415101E) SEE 25-41-51-01B FOR NHA SEE 25-41-51-01C FOR NHA SEE 25-41-51-01D FOR NHA SEE 25-41-51-01E FOR NHA		RF
-001H	D2549010502466		. HOUSING NP used on 050H (25415101A) SEE 25-41-51-01A FOR NHA		RF
-001J	D2549010502866		. HOUSING NP used on 050C (25415101B), 050D (25415101E), 050E (25415101F) SEE 25-41-51-01B FOR NHA SEE 25-41-51-01E FOR NHA SEE 25-41-51-01F FOR NHA		RF
-001K	D2549010502666		. HOUSING NP used on 050B (25415101B), 050F (25415101E) SEE 25-41-51-01B FOR NHA SEE 25-41-51-01E FOR NHA		RF
-001L	D2549020600866		. HOUSING NP used on 050J (25415101E) SEE 25-41-51-01E FOR NHA		RF

- ITEM NOT ILLUSTRATED

FIG. ITEM	PART NUMBER	AIRLINE STOCK NUMBER	NOMENCLATURE 1234567	EFF CODE	UNITS PER ASSY
-001M	D2549020602066		. HOUSING NP used on 050G (25415101F), 050H (25415101N) SEE 25-41-51-01F FOR NHA SEE 25-41-51-01N FOR NHA		RF
-001N	D2549020502666		. HOUSING NP used on 050G (25415101A), 050G (25415101B), 050E (25415101D) SEE 25-41-51-01A FOR NHA SEE 25-41-51-01B FOR NHA SEE 25-41-51-01D FOR NHA		RF
010A	A225401301-500		. . HOUSING ASSY used on 001A		001
-010B	A225401301-602		. . HOUSING ASSY used on 001B		001
-010C	A225401301-502		. . HOUSING ASSY used on 001C		001
-010D	A225401301-604		. . HOUSING ASSY used on 001D		001
-010E	A225401301-504		. . HOUSING ASSY used on 001E		001
-010F	A225401301-606		. . HOUSING ASSY used on 001F		001
-010G	A225401301-506		. . HOUSING ASSY used on 001G		001
-010H	A225401311-500		. . HOUSING ASSY used on 001H		001
-010J	A225401301-510		. . HOUSING ASSY used on 001K		001

- ITEM NOT ILLUSTRATED

FIG. ITEM	PART NUMBER	AIRLINE STOCK NUMBER	NOMENCLATURE 1234567	EFF CODE	UNITS PER ASSY
-010K	A225401301-700		. . HOUSING ASSY used on 001J		001
-010L	A225401301-616		. . HOUSING ASSY used on 001L		001
-010M	A225401301-518		. . HOUSING ASSY used on 001M		001
010N	A225401301-618		. . HOUSING ASSY POST SB 52-1098 used on 001N		001
020A	0-112-0016-2000		. . . STRIP-SLIDING USE AS REQUIRED used on 010A, 010B, 010C, 010D, 010E, 010F, 010G, 010H, 010J, 010K, 010L, 010M, 010N		AR
030A	0-112-0015-2000		. . . STRIP-SLIDING USE AS REQUIRED used on 010A, 010B, 010C, 010D, 010E, 010F, 010G, 010H, 010J, 010K, 010L, 010M, 010N		AR
040A	A225400211-210		. . . PLATE-SCUFF used on 010A, 010B, 010C, 010D, 010E, 010F, 010G, 010H, 010J, 010K, 010L, 010M, 010N		001
-050A	NSA935405-01		. . . MOUNT USE AS REQUIRED used on 010A, 010B, 010C, 010D, 010E, 010F, 010G, 010H, 010J, 010K, 010L, 010M, 010N		AR
060A	A225400232-208		. . . FITTING used on 010A, 010B, 010C, 010D, 010E, 010F, 010G, 010H, 010J, 010K, 010L, 010M, 010N		002

- ITEM NOT ILLUSTRATED

FIG. ITEM	PART NUMBER	AIRLINE STOCK NUMBER	NOMENCLATURE 1234567	EFF CODE	UNITS PER ASSY
070A	ABS0704-6-50		. . . SCREW used on 010A, 010B, 010C, 010D, 010E, 010F, 010G, 010H, 010J, 010K, 010L, 010M, 010N		004
-100A	NAS1833C08-370		. . . INSERT used on 010A, 010B, 010C, 010D, 010E, 010F, 010G, 010H, 010J, 010K, 010L, 010M, 010N		098
-110A	NAS1835C08		. . . INSERT used on 010A, 010B, 010C, 010D, 010E, 010F, 010G, 010H, 010J, 010K, 010L, 010M, 010N		010
-130A	NSA5345-06C		. . . INSERT used on 010A, 010B, 010C, 010D, 010E, 010F, 010G, 010H, 010J, 010K, 010L, 010M, 010N		005
-140A	NSA5345-08C		. . . INSERT used on 010A, 010B, 010C, 010D, 010E, 010F, 010G, 010H, 010J, 010K, 010L, 010M, 010N		004
150A	A2-254-0006-01		. . MIRROR-GLASS used on 001A, 001B, 001C, 001D, 001E, 001F, 001G, 001H, 001J, 001K, 001L, 001M, 001N		001
160A	A225400451-200		. . STUD used on 001A, 001B, 001C, 001D, 001E, 001F, 001G, 001H, 001J, 001K, 001L, 001M, 001N		001
170A	NAS1100-08-4		. . SCREW used on 001A, 001B, 001C, 001D, 001E, 001F, 001G, 001H, 001J, 001K, 001L, 001M, 001N		003

- ITEM NOT ILLUSTRATED

FIG. ITEM	PART NUMBER	AIRLINE STOCK NUMBER	NOMENCLATURE 1234567	EFF CODE	UNITS PER ASSY
180A	A225400224-212		. . SECTION used on 001A, 001B, 001C, 001D, 001E, 001F, 001G, 001H, 001J, 001K, 001L, 001M, 001N		001
190A	ABS0307A2-11		. . SECTION-SEALING USE AS REQUIRED BUY PN ABS0307AB2-11 used on 001A, 001B, 001C, 001D, 001E, 001F, 001G, 001H, 001J, 001K, 001L, 001M, 001N		AR
200A	A225400500-200		. . PLACARD used on 001A, 001B, 001C, 001D, 001E, 001F, 001G, 001H, 001J, 001K, 001L, 001M, 001N		001
210A	A225400500-202		. . PLACARD used on 001A, 001B, 001C, 001D, 001E, 001F, 001G, 001H, 001K, 001L, 001M, 001N		001
220A	NAS1096-3-10		. . SCREW BUY PN NAS1801-3-10 used on 001A, 001B, 001C, 001D, 001E, 001F, 001G, 001H, 001J, 001K, 001L, 001M, 001N		001
230A	AN960C10L		. . WASHER BUY PN NAS1149C0332R used on 001A, 001B, 001C, 001D, 001E, 001F, 001G, 001H, 001J, 001K, 001L, 001M, 001N		001

- ITEM NOT ILLUSTRATED

THIS PAGE IS INTENTIONALLY LEFT BLANK

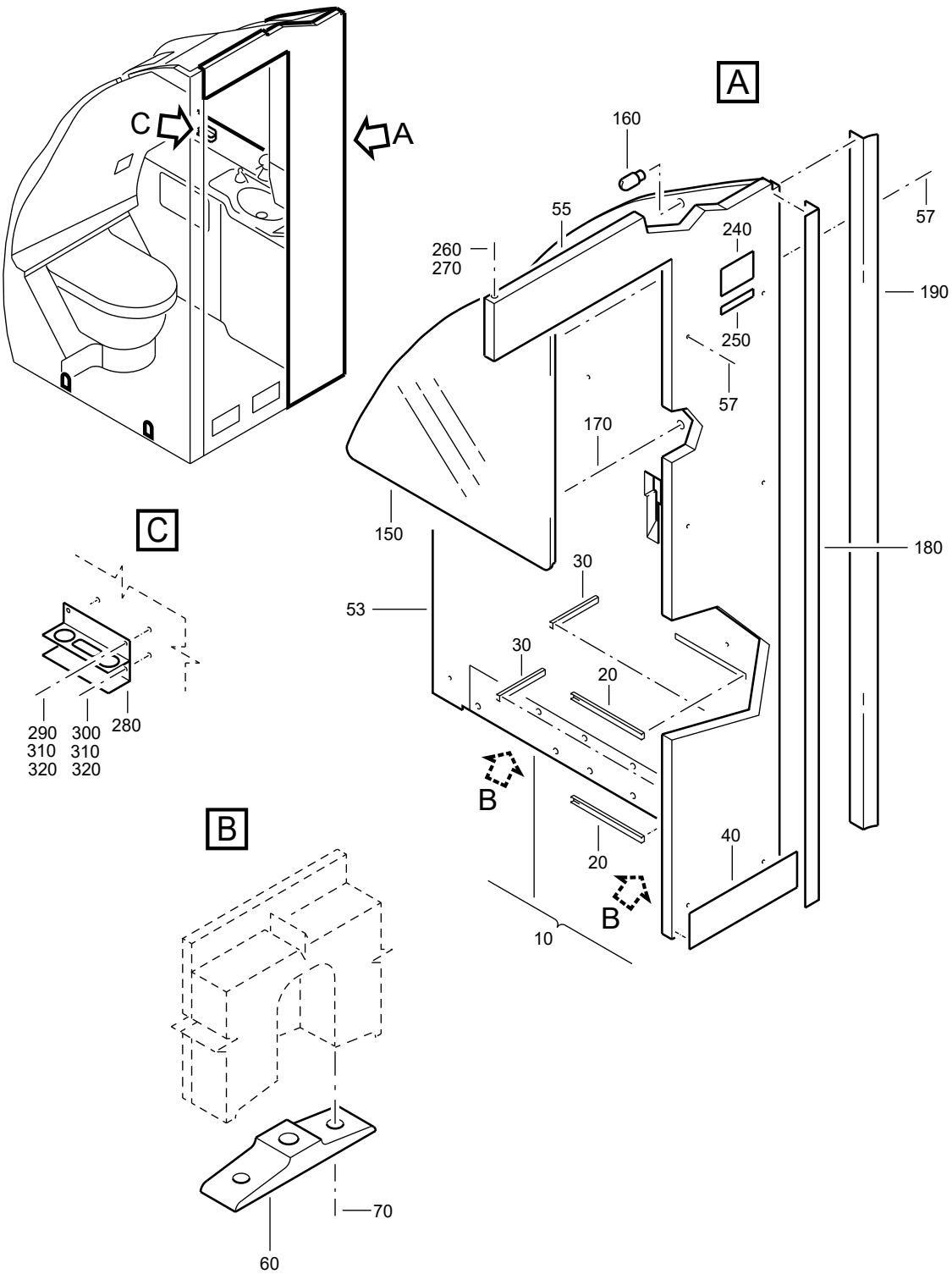

F_PL_254151_07_A_01_00

HOUSING
Figure 07A/EN254151SHEET07A01

FIG. ITEM	PART NUMBER	AIRLINE STOCK NUMBER	NOMENCLATURE 1234567	EFF CODE	UNITS PER ASSY
07A					
-001A	D2549010501066		. HOUSING NP used on 050A (25415101A) SEE 25-41-51-01A FOR NHA		RF
-001B	D2549020501666		. HOUSING NP used on 050F (25415101A), 050E (25415101B) SEE 25-41-51-01A FOR NHA SEE 25-41-51-01B FOR NHA		RF
-001C	D2549030500266		. HOUSING NP used on 050F (254151010), 050B (25415101E) SEE 25-41-51-010 FOR NHA SEE 25-41-51-01E FOR NHA		RF
-001D	D2549030500666		. HOUSING NP used on 050B (25415101C), 050A (25415101E) SEE 25-41-51-01C FOR NHA SEE 25-41-51-01E FOR NHA		RF
-001E	D2549010504266		. HOUSING NP used on 050C (25415101C) SEE 25-41-51-01C FOR NHA		RF
-001F	D2549010505666		. HOUSING NP used on 050F (25415101D), 050K (25415101G) SEE 25-41-51-01D FOR NHA SEE 25-41-51-01G FOR NHA		RF
-001G	D2549020600066		. HOUSING NP used on 050H (25415101C) SEE 25-41-51-01C FOR NHA		RF

- ITEM NOT ILLUSTRATED

FIG. ITEM	PART NUMBER	AIRLINE STOCK NUMBER	NOMENCLATURE 1234567	EFF CODE	UNITS PER ASSY
-001H	D2549030500866		. HOUSING NP used on 050K (25415101A), 050J (25415101C), 050F(25415101H) SEE 25-41-51-01A FOR NHA SEE 25-41-51-01C FOR NHA SEE 25-41-51-01H FOR NHA		RF
-001J	D2549020504066		. HOUSING NP used on 050A (25415101D) SEE 25-41-51-01D FOR NHA		RF
-001K	D2549020600266		. HOUSING NP used on 050B (25415101D) SEE 25-41-51-01D FOR NHA		RF
-001L	D2549020600466		. HOUSING NP used on 050J (254151410) SEE 25-41-51-410 FOR NHA		RF
-001M	D2549010502066		. HOUSING NP used on 050F (25415101C) SEE 25-41-51-01C FOR NHA		RF
-001N	D2549010501066		. HOUSING NP POST SB 25-1314 used on 050F (25415141T) SEE 25-41-51-41T FOR NHA		RF
-001P	D2549020504166		. HOUSING NP POST SB 25-1314 used on 050H (25415101D) SEE 25-41-51-01D FOR NHA		RF
010A	A225401307-500		. . HOUSING ASSY used on 001A		001
-010B	A225401307-502		. . HOUSING ASSY used on 001B		001
-010C	A225401307-504		. . HOUSING ASSY used on 001C		001

- ITEM NOT ILLUSTRATED

FIG. ITEM	PART NUMBER	AIRLINE STOCK NUMBER	NOMENCLATURE 1234567	EFF CODE	UNITS PER ASSY
-010D	A225401301-512		. . HOUSING ASSY used on 001D		001
-010E	A2254013018608		. . HOUSING ASSY POST SB 25-1314 used on 001E		001
-010F	A225401301-710		. . HOUSING ASSY used on 001F		001
-010G	A2254013018610		. . HOUSING ASSY POST SB 25-1314 used on 001G		001
-010H	A225401301-702		. . HOUSING ASSY used on 001H		001
-010J	A225401301-704		. . HOUSING ASSY used on 001J		001
-010K	A225401301-514		. . HOUSING ASSY used on 001K		001
-010L	A225401301-712		. . HOUSING ASSY used on 001L		001
-010M	A2254013078504		. . HOUSING ASSY POST SB 25-1314 used on 001M		001
-010N	A2254013078500		. . HOUSING ASSY POST SB 25-1314 used on 001N		001
-010P	A2254013018704		. . HOUSING ASSY POST SB 25-1314 used on 001P		001

- ITEM NOT ILLUSTRATED

FIG. ITEM	PART NUMBER	AIRLINE STOCK NUMBER	NOMENCLATURE 1234567	EFF CODE	UNITS PER ASSY
020A	0-112-0016-2000		. . . STRIP-SLIDING USE AS REQUIRED used on 010A, 010B, 010C, 010D, 010E, 010F, 010G, 010H, 010J, 010K, 010L, 010M, 010N, 010P		AR
030A	0-112-0015-2000		. . . STRIP-SLIDING USE AS REQUIRED used on 010A, 010B, 010C, 010D, 010E, 010F, 010G, 010H, 010J, 010K, 010L, 010M, 010N, 010P		AR
040A	A225400211-210		. . . PLATE-SCUFF used on 010A, 010B, 010C, 010D, 010E, 010F, 010G, 010H, 010J, 010K, 010L, 010M, 010N, 010P		001
-050A	NSA935405-01		. . . MOUNT used on 010A, 010B, 010C, 010D, 010E, 010F, 010G, 010H, 010J, 010K, 010L, 010M, 010N, 010P		035
053A	A225401213-200		. . . PLATE-ARMOR used on 010A, 010B, 010C, 010M, 010N		001
055A	A225401213-202		. . . PLATE-ARMOR used on 010A, 010B, 010C, 010M, 010N		001
057A	NAS1102-08-7		. . . SCREW used on 010A, 010B, 010C, 010M, 010N		009

- ITEM NOT ILLUSTRATED

FIG. ITEM	PART NUMBER	AIRLINE STOCK NUMBER	NOMENCLATURE 1234567	EFF CODE	UNITS PER ASSY
060A	A225400232-208		. . . FITTING used on 010A, 010B, 010C, 010D, 010E, 010F, 010G, 010H, 010J, 010K, 010L, 010M, 010N, 010P		002
070A	ABS0704-6-50		. . . SCREW used on 010A, 010B, 010C, 010D, 010E, 010F, 010G, 010H, 010J, 010K, 010L, 010M, 010N, 010P		004
-100A	NAS1833C08-370		. . . INSERT USAGE RANGE FROM 081 TO 101 POST SB 25-1448 used on 010A, 010B, 010C, 010D, 010E, 010F, 010G, 010H, 010J, 010K, 010L, 010M, 010N, 010P		091
-110A	NAS1835C08		. . . INSERT used on 010A, 010B, 010C, 010D, 010E, 010F, 010G, 010H, 010J, 010K, 010L, 010M, 010N, 010P		014
-120A	EF1842-06C2		. . . INSERT used on 010E, 010F, 010G, 010H, 010J, 010K, 010L, 010P		008
-130A	NSA5345-06C		. . . INSERT used on 010A, 010B, 010C, 010D, 010F, 010H, 010K, 010M, 010N		010

- ITEM NOT ILLUSTRATED

FIG. ITEM	PART NUMBER	AIRLINE STOCK NUMBER	NOMENCLATURE 1234567	EFF CODE	UNITS PER ASSY
-140A	NSA5345-08C		. . . INSERT USAGE RANGE FROM 004 TO 020 used on 010A, 010B, 010C, 010D, 010E, 010F, 010G, 010H, 010J, 010K, 010L, 010M, 010N, 010P		012
150A	A2-254-0006-01		. . MIRROR-GLASS used on 001A, 001B, 001C, 001D, 001E, 001F, 001G, 001H, 001J, 001K, 001L, 001M, 001N, 001P		001
160A	A225400451-200		. . STUD used on 001A, 001B, 001C, 001D, 001E, 001F, 001G, 001H, 001J, 001K, 001L, 001M, 001N, 001P		001
170A	NAS1100-08-4		. . SCREW used on 001A, 001B, 001C, 001D, 001E, 001F, 001G, 001H, 001J, 001K, 001L, 001M, 001N, 001P		003
180A	A225400224-212		. . SECTION used on 001A, 001B, 001C, 001D, 001E, 001F, 001G, 001H, 001J, 001K, 001L, 001M, 001N, 001P		001
190A	ABS0307A2-11		. . SECTION-SEALING USE AS REQUIRED BUY PN ABS0307AB2-11 used on 001A, 001B, 001C, 001D, 001E, 001F, 001G, 001H, 001J, 001K, 001L, 001M, 001N, 001P		AR

- ITEM NOT ILLUSTRATED

FIG. ITEM	PART NUMBER	AIRLINE STOCK NUMBER	NOMENCLATURE 1234567	EFF CODE	UNITS PER ASSY
-200A	NSA5345-3C		. . INSERT used on 001A, 001B, 001C, 001D, 001E, 001F, 001G, 001H, 001J, 001K, 001L, 001M, 001N, 001P		001
240A	A225400500-200		. . PLACARD used on 001A, 001B, 001C, 001D, 001E, 001F, 001G, 001H, 001J, 001K, 001L, 001M, 001N, 001P		001
250A	A225400500-202		. . PLACARD used on 001A, 001B, 001C, 001D, 001E, 001F, 001G, 001H, 001J, 001K, 001L, 001M, 001N, 001P		001
260A	NAS1096-3-10		. . SCREW BUY PN NAS1801-3-10 used on 001A, 001B, 001C, 001D, 001E, 001F, 001G, 001H, 001J, 001K, 001L, 001M, 001N, 001P		001
270A	AN960C10L		. . WASHER BUY PN NAS1149C0332R used on 001A, 001B, 001C, 001D, 001E, 001F, 001G, 001H, 001J, 001K, 001L, 001M, 001N, 001P		001
280A	A2547321001000		. . HOLDER-COSMETICS used on 001F		001
290A	NAS1102E08-6		. . SCREW used on 001F		002
300A	NAS1100E08-6		. . SCREW used on 001F		002

- ITEM NOT ILLUSTRATED

FIG. ITEM	PART NUMBER	AIRLINE STOCK NUMBER	NOMENCLATURE 1234567	EFF CODE	UNITS PER ASSY
310A	AN960C8		. . WASHER BUY PN NAS1149CN832R used on 001F		004
320A	MS21042-08		. . NUT used on 001F		004

- ITEM NOT ILLUSTRATED

THIS PAGE IS INTENTIONALLY LEFT BLANK

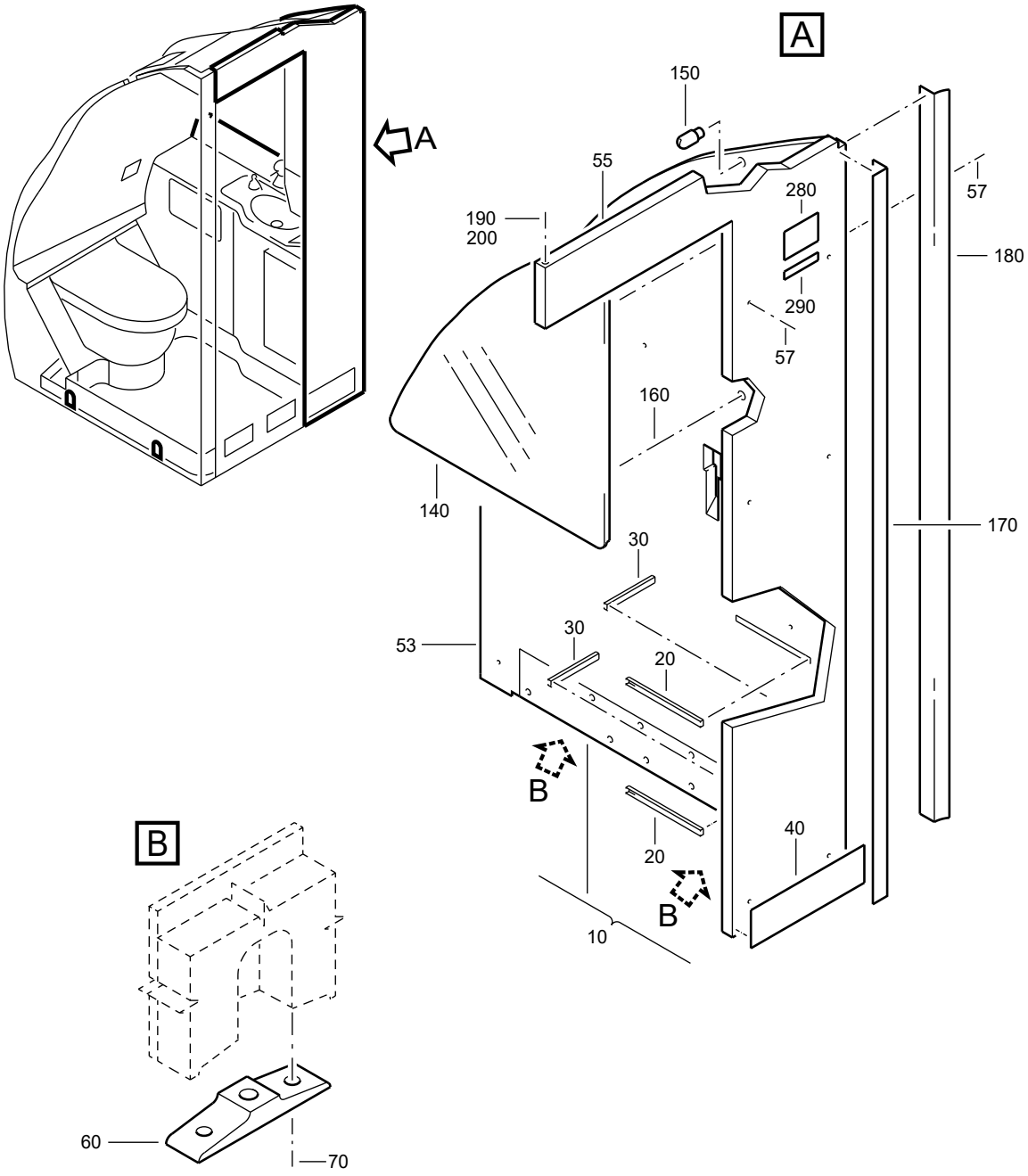

F_PL_254151_07_B_01_00

HOUSING
Figure 07B/EN254151SHEET07B01

FIG. ITEM	PART NUMBER	AIRLINE STOCK NUMBER	NOMENCLATURE 1234567		EFF CODE	UNITS PER ASSY
07B						
-001A	D2549010511066		. HOUSING used on 050B (25415101J), 050G (25415101K), 050D(25415101N), 050E (25415101P), 050H (25415101V), 050D(25415101Y), 050E (25415141F), 050J (25415141G) SEE 25-41-51-01J FOR NHA SEE 25-41-51-01K FOR NHA SEE 25-41-51-01N FOR NHA SEE 25-41-51-01P FOR NHA SEE 25-41-51-01V FOR NHA SEE 25-41-51-01Y FOR NHA SEE 25-41-51-41F FOR NHA SEE 25-41-51-41G FOR NHA	NP		RF
-001B	D2549030501866		. HOUSING used on 050G (25415101D), 050C (25415101F) SEE 25-41-51-01D FOR NHA SEE 25-41-51-01F FOR NHA	NP		RF
-001C	D2549020601266		. HOUSING used on 050K (25415101E) SEE 25-41-51-01E FOR NHA	NP		RF
-001D	D2549020603466		. HOUSING used on 050E (25415101G) SEE 25-41-51-01G FOR NHA	NP		RF

- ITEM NOT ILLUSTRATED

FIG. ITEM	PART NUMBER	AIRLINE STOCK NUMBER	NOMENCLATURE 1234567		EFF CODE	UNITS PER ASSY
-001E	D2549030505266		. HOUSING used on 050D (25415101J), 050C (25415101N), 050E(25415101S), 050L (25415101T), 050A (25415101V), 050G(254151410), 050A (25415141A) SEE 25-41-51-01J FOR NHA SEE 25-41-51-01N FOR NHA SEE 25-41-51-01S FOR NHA SEE 25-41-51-01T FOR NHA SEE 25-41-51-01V FOR NHA SEE 25-41-51-410 FOR NHA SEE 25-41-51-41A FOR NHA	NP		RF
-001F	D2549010509066		. HOUSING used on 050G (25415101G) SEE 25-41-51-01G FOR NHA	NP		RF
-001G	D2549020601866		. HOUSING used on 050H (25415101G) SEE 25-41-51-01G FOR NHA	NP		RF
-001H	D2549020603866		. HOUSING used on 050L (25415101G) SEE 25-41-51-01G FOR NHA	NP		RF
-001J	D2549020606666		. HOUSING used on 050H (25415101H) SEE 25-41-51-01H FOR NHA	NP		RF
-001K	D2549030504866		. HOUSING used on 050A (25415101J), 050C (25415101S), 050G(25415101Z) SEE 25-41-51-01J FOR NHA SEE 25-41-51-01S FOR NHA SEE 25-41-51-01Z FOR NHA	NP		RF
-001L	D2549010500066		. HOUSING POST SB 25-1314 used on 050J (25415101L) SEE 25-41-51-01L FOR NHA	NP		RF

- ITEM NOT ILLUSTRATED

FIG. ITEM	PART NUMBER	AIRLINE STOCK NUMBER	NOMENCLATURE 1234567		EFF CODE	UNITS PER ASSY
-001M	D2549020500266		. HOUSING used on 050G (25415141T) SEE 25-41-51-41T FOR NHA	NP		RF
-001N	D2549010508466		. HOUSING used on 050M (25415101G) SEE 25-41-51-01G FOR NHA	NP		RF
-001P	D2547160005666		. HOUSING POST SB 25-1574 used on 050M (25415141G) SEE 25-41-51-41G FOR NHA	NP		RF
010A	A225401302-524		. . HOUSING ASSY used on 001A			001
-010B	A225401301-614		. . HOUSING ASSY used on 001B			001
-010C	A225401301-516		. . HOUSING ASSY used on 001C			001
-010D	A225401301-706		. . HOUSING ASSY used on 001D			001
-010E	A2254013018522		. . HOUSING ASSY used on 001F			001
-010F	A225401301-514		. . HOUSING ASSY used on 001G			001
-010G	A225401301-616		. . HOUSING ASSY used on 001H			001
-010H	A225401302-620		. . HOUSING ASSY POST SB 52-1098 used on 001J			001
-010J	A225401302-528		. . HOUSING ASSY used on 001K			001

- ITEM NOT ILLUSTRATED

FIG. ITEM	PART NUMBER	AIRLINE STOCK NUMBER	NOMENCLATURE 1234567	EFF CODE	UNITS PER ASSY
-010K	A225401302-530		. . HOUSING ASSY used on 001E		001
-010L	A2254013018516		. . HOUSING ASSY POST SB 25-1314 used on 001L		001
-010M	A2254013018502		. . HOUSING ASSY POST SB 25-1314 used on 001M		001
-010N	A2254013018514		. . HOUSING ASSY POST SB 25-1314 used on 001N		001
-010P	A225401302-514		. . HOUSING ASSY used on 001P		001
020A	0-112-0016-2000		. . . STRIP-SLIDING USE AS REQUIRED used on 010A, 010B, 010C, 010D, 010E, 010F, 010G, 010H, 010J, 010K, 010L, 010M, 010N, 010P		AR
030A	0-112-0015-2000		. . . STRIP-SLIDING USE AS REQUIRED used on 010A, 010B, 010C, 010D, 010E, 010F, 010G, 010H, 010J, 010K, 010L, 010M, 010N, 010P		AR
040A	A225400211-210		. . . PLATE-SCUFF used on 010A, 010B, 010C, 010D, 010E, 010F, 010G, 010H, 010J, 010K, 010L, 010M, 010N, 010P		001
-050A	NSA935405-01		. . . MOUNT used on 010A, 010C, 010G, 010H, 010L, 010M, 010N, 010P		035

- ITEM NOT ILLUSTRATED

FIG. ITEM	PART NUMBER	AIRLINE STOCK NUMBER	NOMENCLATURE 1234567	EFF CODE	UNITS PER ASSY
053A	A225401213-200		. . . PLATE-ARMOR used on 010H		001
055A	A225401213-202		. . . PLATE-ARMOR used on 010H		001
057A	NAS1102-08-7		. . . SCREW used on 010H		009
060A	A225400232-208		. . . FITTING used on 010A, 010B, 010C, 010D, 010E, 010F, 010G, 010H, 010J, 010K, 010L, 010M, 010N, 010P		002
070A	ABS0704-6-50		. . . SCREW used on 010A, 010B, 010C, 010D, 010E, 010F, 010G, 010H, 010J, 010K, 010L, 010M, 010N, 010P		004
-080A	NAS1833C08-370		. . . INSERT USAGE RANGE FROM 066 TO 094 used on 010A, 010B, 010C, 010D, 010E, 010F, 010G, 010H, 010J, 010K, 010L, 010M, 010N, 010P		080
-090A	NAS1835C08		. . . INSERT USAGE RANGE FROM 010 TO 028 used on 010A, 010B, 010C, 010D, 010E, 010F, 010G, 010H, 010J, 010K, 010L, 010M, 010N, 010P		019

- ITEM NOT ILLUSTRATED

FIG. ITEM	PART NUMBER	AIRLINE STOCK NUMBER	NOMENCLATURE 1234567	EFF CODE	UNITS PER ASSY
-110A	NSA5345-06C		. . . INSERT USAGE RANGE FROM 001 TO 005 used on 010A, 010C, 010H, 010J, 010L, 010M, 010P		003
-120A	NSA5345-08C		. . . INSERT USAGE RANGE FROM 004 TO 008 used on 010A, 010B, 010C, 010D, 010E, 010F, 010G, 010H, 010J, 010K, 010L, 010M, 010N, 010P		006
-130A	EF1842-06C2		. . . INSERT USAGE RANGE FROM 008 TO 012 used on 010B, 010C, 010D, 010F, 010G, 010H, 010P		010
-135A	EF1842-06C2		. . . INSERT used on 010A, 010K		004
140A	A2-254-0006-01		. . MIRROR-GLASS used on 001A, 001B, 001C, 001D, 001E, 001F, 001G, 001H, 001J, 001K, 001L, 001M, 001N, 001P		001
150A	A225400451-200		. . STUD used on 001A, 001B, 001C, 001D, 001E, 001F, 001G, 001H, 001J, 001K, 001L, 001M, 001N, 001P		001
160A	NAS1100-08-4		. . SCREW used on 001A, 001B, 001C, 001D, 001E, 001F, 001G, 001H, 001J, 001K, 001L, 001M, 001N, 001P		003

- ITEM NOT ILLUSTRATED

FIG. ITEM	PART NUMBER	AIRLINE STOCK NUMBER	NOMENCLATURE 1234567	EFF CODE	UNITS PER ASSY
170A	A225400224-212		. . SECTION used on 001A, 001B, 001C, 001D, 001E, 001F, 001G, 001H, 001J, 001K, 001L, 001M, 001N, 001P		001
180A	ABS0307A2-11		. . SECTION-SEALING USE AS REQUIRED DETERMINE LENGTH ON INSTALLATION BUY PN ABS0307AB2-11 used on 001A, 001B, 001C, 001D, 001E, 001F, 001G, 001H, 001J, 001K, 001L, 001M, 001N, 001P		AR
190A	NAS1096-3-10		. . SCREW BUY PN NAS1801-3-10 used on 001A, 001B, 001C, 001D, 001E, 001F, 001G, 001H, 001J, 001K, 001L, 001M, 001N, 001P		001
200A	AN960C10L		. . WASHER BUY PN NAS1149C0332R used on 001B, 001C		001
-200B	NAS1149C0332R		. . WASHER used on 001A, 001D, 001E, 001F, 001G, 001H, 001J, 001K, 001L, 001M, 001N		001
280A	A225400500-200		. . PLACARD used on 001A, 001B, 001C, 001D, 001E, 001F, 001G, 001H, 001J, 001K, 001L, 001M, 001N, 001P		001

- ITEM NOT ILLUSTRATED

FIG. ITEM	PART NUMBER	AIRLINE STOCK NUMBER	NOMENCLATURE 1234567	EFF CODE	UNITS PER ASSY
290A	A225400500-202		. . PLACARD used on 001A, 001B, 001C, 001D, 001E, 001F, 001G, 001H, 001J, 001K, 001L, 001M, 001N, 001P		001

- ITEM NOT ILLUSTRATED

THIS PAGE IS INTENTIONALLY LEFT BLANK

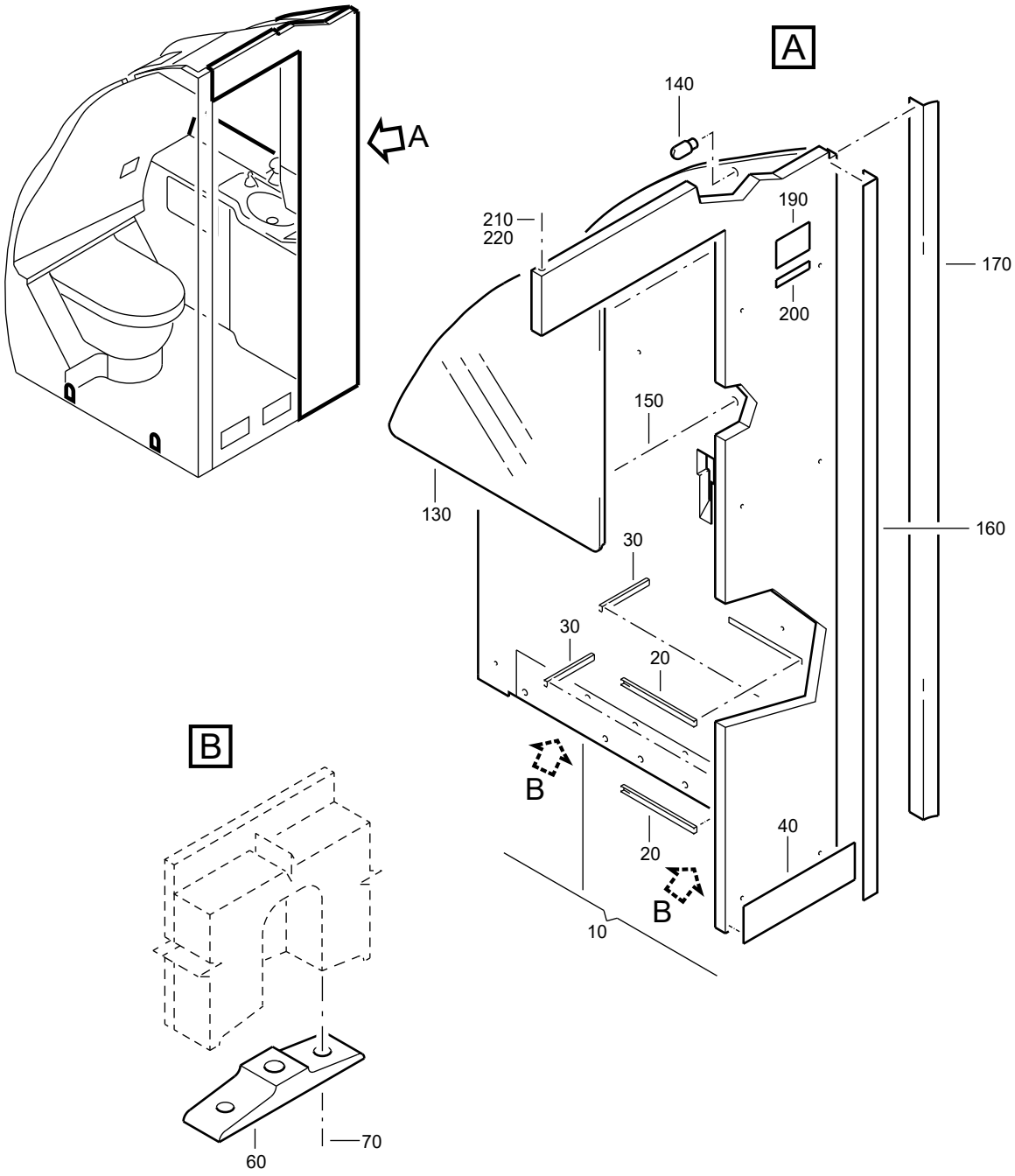

F_PL_254151_07_C_01_00

HOUSING
Figure 07C/EN254151SHEET07C01

FIG. ITEM	PART NUMBER	AIRLINE STOCK NUMBER	NOMENCLATURE 1234567		EFF CODE	UNITS PER ASSY
07C						
-001A	D2549010511466		. HOUSING used on 050F (25415101K), 050E (25415101L), 050D(25415101S) SEE 25-41-51-01K FOR NHA SEE 25-41-51-01L FOR NHA SEE 25-41-51-01S FOR NHA	NP		RF
-001B	D2549030502666		. HOUSING used on 050H (25415101F) SEE 25-41-51-01F FOR NHA	NP		RF
-001C	D2549010506866		. HOUSING used on 050D (25415101W), 050B (25415141B) SEE 25-41-51-01W FOR NHA SEE 25-41-51-41B FOR NHA	NP		RF
-001D	D2549010508066		. HOUSING used on 050A (25415101G) SEE 25-41-51-01G FOR NHA	NP		RF
-001E	D2549020602666		. HOUSING used on 050B (25415101G), 050J (25415101H) SEE 25-41-51-01G FOR NHA SEE 25-41-51-01H FOR NHA	NP		RF
-001F	D2549020602866		. HOUSING used on 050C (25415101G) SEE 25-41-51-01G FOR NHA	NP		RF

- ITEM NOT ILLUSTRATED

FIG. ITEM	PART NUMBER	AIRLINE STOCK NUMBER	NOMENCLATURE 1234567		EFF CODE	UNITS PER ASSY
-001G	D2549030506066		. HOUSING used on 050A (25415101Q), 050K (25415101S), 050C (25415101V), 050B (25415101W), 050E (25415101Z), 050C(25415141B), 050E (25415141D), 050B (25415141G), 050L(25415141M) SEE 25-41-51-01Q FOR NHA SEE 25-41-51-01S FOR NHA SEE 25-41-51-01V FOR NHA SEE 25-41-51-01W FOR NHA SEE 25-41-51-01Z FOR NHA SEE 25-41-51-41B FOR NHA SEE 25-41-51-41D FOR NHA SEE 25-41-51-41G FOR NHA SEE 25-41-51-41M FOR NHA	NP		RF
-001H	D2549020603666		. HOUSING used on 050B (25415101H) SEE 25-41-51-01H FOR NHA	NP		RF
-001J	D2549010509266		. HOUSING used on 050D (25415101H) SEE 25-41-51-01H FOR NHA	NP		RF
-001K	D2547160007466		. HOUSING POST SB 25-1640 used on 050L (25415101H) SEE 25-41-51-01H FOR NHA	NP		RF
010A	A225401302-504		. . HOUSING ASSY used on 001A			001
-010B	A225401301-720		. . HOUSING ASSY used on 001B			001
-010C	A225401301-526		. . HOUSING ASSY used on 001C			001

- ITEM NOT ILLUSTRATED

FIG. ITEM	PART NUMBER	AIRLINE STOCK NUMBER	NOMENCLATURE 1234567	EFF CODE	UNITS PER ASSY
-010D	A225401301-730		. . HOUSING ASSY used on 001D		001
-010E	A225401301-520		. . HOUSING ASSY used on 001E		001
-010F	A225401301-740		. . HOUSING ASSY used on 001F		001
-010G	A225401301-724		. . HOUSING ASSY used on 001H, 001K		001
-010H	A225401301-524		. . HOUSING ASSY used on 001J		001
-010J	A2254013028506		. . HOUSING ASSY used on 001G		001
020A	0-112-0016-2000		. . . STRIP-SLIDING USE AS REQUIRED used on 010A, 010B, 010C, 010D, 010E, 010F, 010G, 010H, 010J		AR
030A	0-112-0015-2000		. . . STRIP-SLIDING USE AS REQUIRED used on 010A, 010B, 010C, 010D, 010E, 010F, 010G, 010H, 010J		AR
040A	A225400211-210		. . . PLATE-SCUFF used on 010A, 010B, 010C, 010D, 010E, 010F, 010G, 010H, 010J		001
-050A	NSA935405-01		. . . MOUNT used on 010A, 010B, 010C, 010D, 010E, 010F, 010G, 010H, 010J		035

- ITEM NOT ILLUSTRATED

FIG. ITEM	PART NUMBER	AIRLINE STOCK NUMBER	NOMENCLATURE 1234567	EFF CODE	UNITS PER ASSY
060A	A225400232-208		. . . FITTING used on 010A, 010B, 010C, 010D, 010E, 010F, 010G, 010H, 010J		002
070A	ABS0704-6-50		. . . SCREW used on 010A, 010B, 010C, 010D, 010E, 010F, 010G, 010H, 010J		004
-080A	NAS1833C08-370		. . . INSERT USE AS REQUIRED used on 010A, 010B, 010C, 010D, 010E, 010F, 010G, 010H, 010J		AR
-090A	NAS1835C08		. . . INSERT USE AS REQUIRED used on 010A, 010B, 010C, 010D, 010E, 010F, 010G, 010H, 010J		AR
-100A	EF1842-06C2		. . . INSERT used on 010A, 010B, 010C, 010D, 010E, 010F, 010G, 010H, 010J		008
-110A	NSA5345-06C		. . . INSERT USE AS REQUIRED used on 010A, 010B, 010C, 010D, 010E, 010F, 010G, 010H, 010J		AR
-120A	NSA5345-08C		. . . INSERT USE AS REQUIRED used on 010A, 010B, 010C, 010D, 010E, 010F, 010G, 010H, 010J		AR

- ITEM NOT ILLUSTRATED

FIG. ITEM	PART NUMBER	AIRLINE STOCK NUMBER	NOMENCLATURE 1234567	EFF CODE	UNITS PER ASSY
130A	A2-254-0006-01		. . MIRROR-GLASS used on 001A, 001B, 001C, 001D, 001E, 001F, 001G, 001H, 001J, 001K		001
140A	A225400451-200		. . STUD used on 001A, 001B, 001C, 001D, 001E, 001F, 001G, 001H, 001J, 001K		001
150A	NAS1100-08-4		. . SCREW used on 001A, 001B, 001C, 001D, 001E, 001F, 001G, 001H, 001J, 001K		003
160A	A225400224-212		. . SECTION used on 001A, 001B, 001C, 001D, 001E, 001F, 001G, 001H, 001J, 001K		001
170A	ABS0307A2-11		. . SECTION-SEALING USE AS REQUIRED BUY PN ABS0307AB2-11 used on 001A, 001B, 001C, 001D, 001E, 001F, 001G, 001H, 001J, 001K		AR
190A	A225400500-200		. . PLACARD used on 001A, 001B, 001C, 001D, 001E, 001F, 001G, 001H, 001J, 001K		001
200A	A225400500-202		. . PLACARD used on 001A, 001B, 001C, 001D, 001E, 001F, 001G, 001H, 001J		001
-200B	A225400500-204		. . PLACARD POST SB 25-1640 used on 001K		001

- ITEM NOT ILLUSTRATED

FIG. ITEM	PART NUMBER	AIRLINE STOCK NUMBER	NOMENCLATURE 1234567	EFF CODE	UNITS PER ASSY
210A	NAS1801-3-10		. . SCREW POST SB 25-1640 used on 001A, 001B, 001C, 001D, 001E, 001F, 001G, 001H, 001J, 001K		001
220A	AN960C10L		. . WASHER BUY PN NAS1149C0332R used on 001B, 001C, 001D		001
-220B	NAS1149C0332R		. . WASHER used on 001A, 001E, 001F, 001G, 001H, 001J, 001K		001

- ITEM NOT ILLUSTRATED

THIS PAGE IS INTENTIONALLY LEFT BLANK

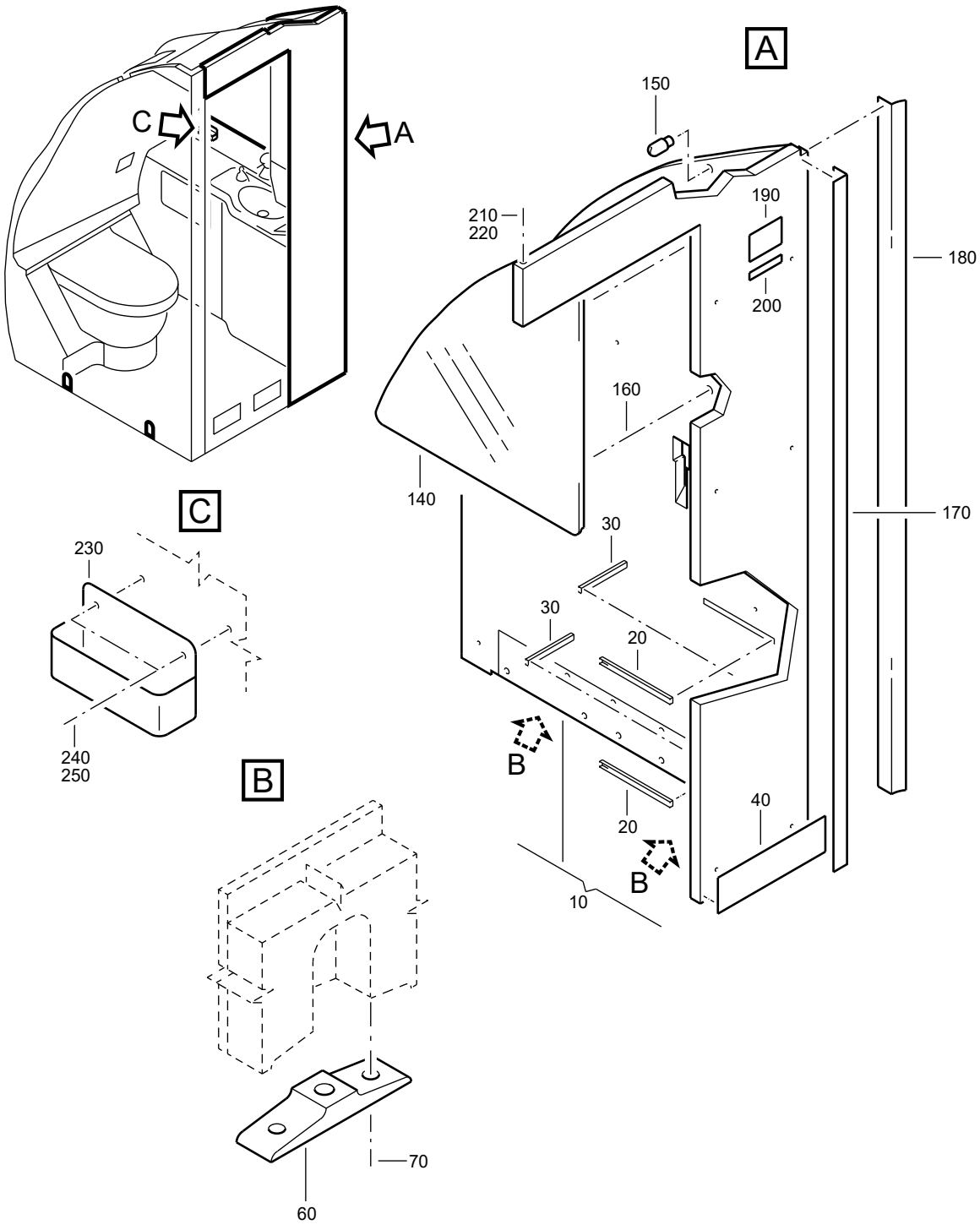

F_PL_254151_07_D_01_00

HOUSING
Figure 07D/EN254151SHEET07D01

FIG. ITEM	PART NUMBER	AIRLINE STOCK NUMBER	NOMENCLATURE 1234567	EFF CODE	UNITS PER ASSY
07D					
-001A	D2549030504066		. HOUSING NP used on 050F (25415101J) SEE 25-41-51-01J FOR NHA		RF
-001B	D2549020506266		. HOUSING NP used on 050G (25415101J), 050A (25415101P), 050D(25415101Q), 050J (25415101T), 050J (25415101V), 050F(25415101W), 050B (25415101Y), 050H (25415141B), 050J(25415141D), 050G (25415141G), 050F (25415141H) SEE 25-41-51-01J FOR NHA SEE 25-41-51-01P FOR NHA SEE 25-41-51-01Q FOR NHA SEE 25-41-51-01T FOR NHA SEE 25-41-51-01V FOR NHA SEE 25-41-51-01W FOR NHA SEE 25-41-51-01Y FOR NHA SEE 25-41-51-41B FOR NHA SEE 25-41-51-41D FOR NHA SEE 25-41-51-41G FOR NHA SEE 25-41-51-41H FOR NHA		RF
-001C	D2549010509466		. HOUSING NP used on 050H (25415101J), 050D (25415101P), 050M(25415101Y) SEE 25-41-51-01J FOR NHA SEE 25-41-51-01P FOR NHA SEE 25-41-51-01Y FOR NHA		RF
-001D	D2549010510466		. HOUSING NP used on 050J (25415101J) SEE 25-41-51-01J FOR NHA		RF

- ITEM NOT ILLUSTRATED

FIG. ITEM	PART NUMBER	AIRLINE STOCK NUMBER	NOMENCLATURE 1234567	EFF CODE	UNITS PER ASSY
-001E	D2549030505666		. HOUSING NP used on 050A (25415101K), 050G (25415101P), 050H (25415101Y) SEE 25-41-51-01K FOR NHA SEE 25-41-51-01P FOR NHA SEE 25-41-51-01Y FOR NHA		RF
-001F	D2549030504666		. HOUSING NP used on 050B (25415101K) SEE 25-41-51-01K FOR NHA		RF
-001G	D2549020604266		. HOUSING NP used on 050E (25415101K), 050G (25415101L), 050F (25415101N), 050K (25415101Q), 050C (25415101U), 050B(25415101X), 050B (25415101Z), 050C (25415141D) SEE 25-41-51-01K FOR NHA SEE 25-41-51-01L FOR NHA SEE 25-41-51-01N FOR NHA SEE 25-41-51-01Q FOR NHA SEE 25-41-51-01U FOR NHA SEE 25-41-51-01X FOR NHA SEE 25-41-51-01Z FOR NHA SEE 25-41-51-41D FOR NHA		RF
-001H	D2549010509866		. HOUSING NP used on 050L (25415101Q), 050H (25415101W), 050D (25415141B), 050F (25415141B) SEE 25-41-51-01Q FOR NHA SEE 25-41-51-01W FOR NHA SEE 25-41-51-41B FOR NHA SEE 25-41-51-41B FOR NHA		RF

- ITEM NOT ILLUSTRATED

FIG. ITEM	PART NUMBER	AIRLINE STOCK NUMBER	NOMENCLATURE 1234567		EFF CODE	UNITS PER ASSY
-001J	D2549020604466		. HOUSING used on 050H (25415101K) SEE 25-41-51-01K FOR NHA	NP		RF
-001K	D2549020605666		. HOUSING used on 050D (25415101K), 050G (25415101M), 050B (25415101Q), 050D (25415101T), 050G (25415101V), 050J(25415141B), 050H (25415141D), 050H (25415141G), 050G(25415141K), 050C (25415141N) SEE 25-41-51-01K FOR NHA SEE 25-41-51-01M FOR NHA SEE 25-41-51-01Q FOR NHA SEE 25-41-51-01T FOR NHA SEE 25-41-51-01V FOR NHA SEE 25-41-51-41B FOR NHA SEE 25-41-51-41D FOR NHA SEE 25-41-51-41G FOR NHA SEE 25-41-51-41K FOR NHA SEE 25-41-51-41N FOR NHA	NP		RF

- ITEM NOT ILLUSTRATED

FIG. ITEM	PART NUMBER	AIRLINE STOCK NUMBER	NOMENCLATURE 1234567	EFF CODE	UNITS PER ASSY
-001L	D2549030505866		. HOUSING NP used on 050K (25415101J), 050F (25415101M), 050F(25415101P), 050B (25415101S), 050M (25415101T), 050F(25415101V), 050G (25415101W), 050C (25415101Z), 050K(25415141B), 050C (25415141C), 050D (25415141G), 050D(25415141H) SEE 25-41-51-01J FOR NHA SEE 25-41-51-01M FOR NHA SEE 25-41-51-01P FOR NHA SEE 25-41-51-01S FOR NHA SEE 25-41-51-01T FOR NHA SEE 25-41-51-01V FOR NHA SEE 25-41-51-01W FOR NHA SEE 25-41-51-01Z FOR NHA SEE 25-41-51-41B FOR NHA SEE 25-41-51-41C FOR NHA SEE 25-41-51-41G FOR NHA SEE 25-41-51-41H FOR NHA		RF
-001M	D2549010510266		. HOUSING NP used on 050D (25415101M) SEE 25-41-51-01M FOR NHA		RF

- ITEM NOT ILLUSTRATED

FIG. ITEM	PART NUMBER	AIRLINE STOCK NUMBER	NOMENCLATURE 1234567	EFF CODE	UNITS PER ASSY
-001N	D2549020607666		. HOUSING NP used on 050B (25415101L), 050J (25415101S), 050C(25415101W), 050H (25415101X), 050C (25415101Y), 050C(25415141A), 050A (25415141C), 050C (25415141G), 050D(25415141J), 050F (25415141K) SEE 25-41-51-01L FOR NHA SEE 25-41-51-01S FOR NHA SEE 25-41-51-01W FOR NHA SEE 25-41-51-01X FOR NHA SEE 25-41-51-01Y FOR NHA SEE 25-41-51-41A FOR NHA SEE 25-41-51-41C FOR NHA SEE 25-41-51-41G FOR NHA SEE 25-41-51-41J FOR NHA SEE 25-41-51-41K FOR NHA		RF
010A	A225401302-750		. . HOUSING ASSY used on 001A		001
-010B	A225401302-770		. . HOUSING ASSY used on 001B		001
-010C	A225401302-700		. . HOUSING ASSY used on 001C		001
-010D	A225401302-776		. . HOUSING ASSY used on 001D		001
-010E	A225401302-600		. . HOUSING ASSY used on 001E		001
-010F	A225401302-774		. . HOUSING ASSY used on 001F		001
-010G	A225401302-616		. . HOUSING ASSY used on 001G		001

- ITEM NOT ILLUSTRATED

FIG. ITEM	PART NUMBER	AIRLINE STOCK NUMBER	NOMENCLATURE 1234567	EFF CODE	UNITS PER ASSY
-010H	A225401302-772		. . HOUSING ASSY used on 001H		001
-010J	A225401302-500		. . HOUSING ASSY used on 001J		001
-010K	A225401302-752		. . HOUSING ASSY used on 001K		001
-010L	A225401302-508		. . HOUSING ASSY used on 001L		001
-010M	A225401307-506		. . HOUSING ASSY used on 001M		001
-010N	A225401302-604		. . HOUSING ASSY used on 001N		001
020A	0-112-0016-2000		. . . STRIP-SLIDING USE AS REQUIRED used on 010A, 010B, 010C, 010D, 010E, 010F, 010G, 010H, 010J, 010K, 010L, 010M, 010N		AR
030A	0-112-0015-2000		. . . STRIP-SLIDING USE AS REQUIRED used on 010A, 010B, 010C, 010D, 010E, 010F, 010G, 010H, 010J, 010K, 010L, 010M, 010N		AR
040A	A225400211-210		. . . PLATE-SCUFF used on 010A, 010B, 010C, 010D, 010E, 010F, 010G, 010H, 010J, 010K, 010L, 010M, 010N		001
-050A	NSA935405-01		. . . MOUNT used on 010A, 010B, 010C, 010D, 010E, 010F, 010G, 010H, 010J, 010K, 010L, 010M, 010N		035

- ITEM NOT ILLUSTRATED

FIG. ITEM	PART NUMBER	AIRLINE STOCK NUMBER	NOMENCLATURE 1234567	EFF CODE	UNITS PER ASSY
060A	A225400232-208		. . . FITTING used on 010A, 010B, 010C, 010D, 010E, 010F, 010G, 010H, 010J, 010K, 010L, 010M, 010N		002
070A	ABS0704-6-50		. . . SCREW used on 010A, 010B, 010C, 010D, 010E, 010F, 010G, 010H, 010J, 010K, 010L, 010M, 010N		004
-080A	NAS1833C08-370		. . . INSERT USE AS REQUIRED used on 010A, 010B, 010C, 010D, 010E, 010F, 010G, 010H, 010J, 010K, 010L, 010M, 010N		AR
-100A	NAS1835C08		. . . INSERT USE AS REQUIRED used on 010A, 010B, 010C, 010D, 010E, 010F, 010G, 010H, 010J, 010K, 010L, 010M, 010N		AR
-110A	EF1842-06C2		. . . INSERT used on 010A, 010B, 010C, 010D, 010E, 010F, 010G, 010H, 010J, 010K, 010L, 010M, 010N		004
-120A	NSA5345-06C		. . . INSERT used on 010A, 010F		001
-130A	NSA5345-08C		. . . INSERT used on 010A, 010B, 010C, 010D, 010E, 010F, 010G, 010H, 010J, 010K, 010L, 010M, 010N		004
140A	A2-254-0006-01		. . MIRROR-GLASS used on 001A, 001B, 001C, 001D, 001E, 001F, 001G, 001H, 001J, 001K, 001L, 001M, 001N		001

- ITEM NOT ILLUSTRATED

FIG. ITEM	PART NUMBER	AIRLINE STOCK NUMBER	NOMENCLATURE 1234567	EFF CODE	UNITS PER ASSY
150A	A225400451-200		. . STUD used on 001A, 001B, 001C, 001D, 001E, 001F, 001G, 001H, 001J, 001K, 001L, 001M, 001N		001
160A	NAS1100-08-4		. . SCREW used on 001A, 001B, 001C, 001D, 001E, 001F, 001G, 001H, 001J, 001K, 001L, 001M, 001N		003
170A	A225400224-212		. . SECTION used on 001A, 001B, 001C, 001D, 001E, 001F, 001G, 001H, 001J, 001K, 001L, 001M, 001N		001
180A	ABS0307A2-11		. . SECTION-SEALING USE AS REQUIRED BUY PN ABS0307AB2-11 used on 001A, 001B, 001C, 001D, 001E, 001F, 001G, 001H, 001J, 001K, 001L, 001M, 001N		AR
190A	A225400500-200		. . PLACARD used on 001A, 001B, 001C, 001D, 001E, 001F, 001G, 001H, 001J, 001K, 001L, 001M, 001N		001
200A	A225400500-202		. . PLACARD used on 001A, 001B, 001C, 001D, 001E, 001F, 001G, 001H, 001J, 001K, 001L, 001M, 001N		001
210A	NAS1096-3-10		. . SCREW BUY PN NAS1801-3-10 used on 001A, 001B, 001C, 001D, 001E, 001F, 001G, 001H, 001J, 001K, 001L, 001M, 001N		001

- ITEM NOT ILLUSTRATED

FIG. ITEM	PART NUMBER	AIRLINE STOCK NUMBER	NOMENCLATURE 1234567	EFF CODE	UNITS PER ASSY
220A	NAS1149C0332R		. . WASHER used on 001A, 001B, 001C, 001D, 001E, 001F, 001G, 001H, 001J, 001K, 001L, 001M, 001N		001
230A	1240-52		. . HOLDER-COSMETICS used on 001J		001
240A	NAS514P832-6		. . SCREW used on 001J		002
250A	NAS1149CN832R		. . WASHER used on 001J		002

- ITEM NOT ILLUSTRATED

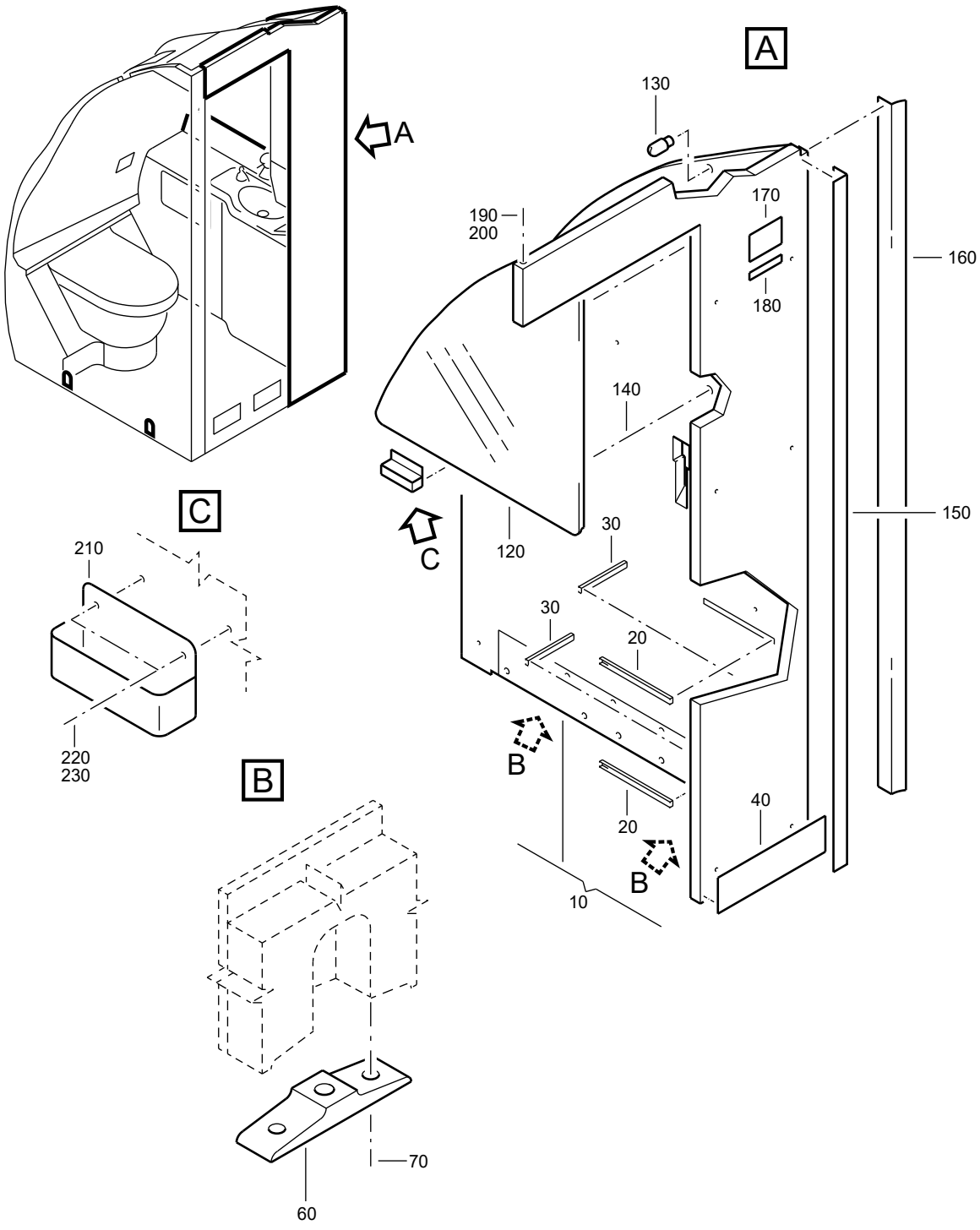

F_PL_254151_07_E_01_00

HOUSING
Figure 07E/EN254151SHEET07E01

FIG. ITEM	PART NUMBER	AIRLINE STOCK NUMBER	NOMENCLATURE 1234567	EFF CODE	UNITS PER ASSY
07E					
-001A	D2549030506266		. HOUSING NP used on 050C (25415101L), 050B (25415101M), 050B(25415101U) SEE 25-41-51-01L FOR NHA SEE 25-41-51-01M FOR NHA SEE 25-41-51-01U FOR NHA		RF
-001B	D2549020605866		. HOUSING NP used on 050D (25415101L) SEE 25-41-51-01L FOR NHA		RF
-001C	D2549020605066		. HOUSING NP used on 050A (25415101M), 050A (25415101U) SEE 25-41-51-01M FOR NHA SEE 25-41-51-01U FOR NHA		RF
-001D	D2549010513666		. HOUSING NP used on 050E (25415141B) SEE 25-41-51-41B FOR NHA		RF
-001E	D2549020608666		. HOUSING NP used on 050E (25415101M) SEE 25-41-51-01M FOR NHA		RF
-001F	D2549010513266		. HOUSING NP used on 050G (25415101Q), 050J (25415101X), 050K (25415141D), 050E (25415141G) SEE 25-41-51-01Q FOR NHA SEE 25-41-51-01X FOR NHA SEE 25-41-51-41D FOR NHA SEE 25-41-51-41G FOR NHA		RF
-001G	D2549020611666		. HOUSING NP used on 050F (25415101S), 050K (254151410) SEE 25-41-51-01S FOR NHA SEE 25-41-51-410 FOR NHA		RF

- ITEM NOT ILLUSTRATED

FIG. ITEM	PART NUMBER	AIRLINE STOCK NUMBER	NOMENCLATURE 1234567	EFF CODE	UNITS PER ASSY
-001H	D2549020610266		. HOUSING NP used on 050G (25415101N), 050A (25415101S), 050E (25415101W), 050E (25415101Y), 050F (254151410), 050K(25415141G) SEE 25-41-51-01N FOR NHA SEE 25-41-51-01S FOR NHA SEE 25-41-51-01W FOR NHA SEE 25-41-51-01Y FOR NHA SEE 25-41-51-410 FOR NHA SEE 25-41-51-41G FOR NHA		RF
-001J	D2549010513866		. HOUSING NP used on 050F (25415101Q), 050H (25415101S), 050E (25415101U), 050B (25415101V), 050D (25415101Z), 050A (25415141B), 050G (25415141D), 050B (25415141F) SEE 25-41-51-01Q FOR NHA SEE 25-41-51-01S FOR NHA SEE 25-41-51-01U FOR NHA SEE 25-41-51-01V FOR NHA SEE 25-41-51-01Z FOR NHA SEE 25-41-51-41B FOR NHA SEE 25-41-51-41D FOR NHA SEE 25-41-51-41F FOR NHA		RF

- ITEM NOT ILLUSTRATED

FIG. ITEM	PART NUMBER	AIRLINE STOCK NUMBER	NOMENCLATURE 1234567		EFF CODE	UNITS PER ASSY
-001K	D2549030507266		. HOUSING used on 050E (25415101N), 050H (25415101Q), 050K (25415101U), 050C (25415101X), 050F (25415101Y), 050E(25415141C), 050A (25415141F) SEE 25-41-51-01N FOR NHA SEE 25-41-51-01Q FOR NHA SEE 25-41-51-01U FOR NHA SEE 25-41-51-01X FOR NHA SEE 25-41-51-01Y FOR NHA SEE 25-41-51-41C FOR NHA SEE 25-41-51-41F FOR NHA	NP		RF
-001L	D2549020605466		. HOUSING used on 050B (25415101P), 050L (25415101Y) SEE 25-41-51-01P FOR NHA SEE 25-41-51-01Y FOR NHA	NP		RF
-001M	D2549020610866		. HOUSING used on 050C (25415101P) SEE 25-41-51-01P FOR NHA	NP		RF
-001N	D2549010514066		. HOUSING used on 050H (25415101P) SEE 25-41-51-01P FOR NHA	NP		RF
-001P	D2547160007066		. HOUSING POST SB 25-1640 used on 050L (25415101L), 050D (25415141F), 050B(25415141H) SEE 25-41-51-01L FOR NHA SEE 25-41-51-41F FOR NHA SEE 25-41-51-41H FOR NHA	NP		RF
010A	A225401302-606		. . HOUSING ASSY used on 001A			001

- ITEM NOT ILLUSTRATED

FIG. ITEM	PART NUMBER	AIRLINE STOCK NUMBER	NOMENCLATURE 1234567	EFF CODE	UNITS PER ASSY
-010B	A225401302-512		. . HOUSING ASSY used on 001B, 001P		001
-010C	A225401302-782		. . HOUSING ASSY used on 001C		001
-010D	A225401302-784		. . HOUSING ASSY used on 001D		001
-010E	A225401302-780		. . HOUSING ASSY used on 001E		001
-010F	A225401302-510		. . HOUSING ASSY used on 001F		001
-010G	A225401302-786		. . HOUSING ASSY used on 001G		001
-010H	A225401302-702		. . HOUSING ASSY used on 001H		001
-010J	A225401302-602		. . HOUSING ASSY used on 001J		001
-010K	A225401302-608		. . HOUSING ASSY used on 001K		001
-010L	A225401302-502		. . HOUSING ASSY used on 001L		001
-010M	A225401302-514		. . HOUSING ASSY used on 001M		001
-010N	A225401302-788		. . HOUSING ASSY used on 001N		001
020A	0-112-0016-2000		. . . STRIP-SLIDING USE AS REQUIRED used on 010A, 010B, 010C, 010D, 010E, 010F, 010G, 010H, 010J, 010K, 010L, 010M, 010N		AR

- ITEM NOT ILLUSTRATED

FIG. ITEM	PART NUMBER	AIRLINE STOCK NUMBER	NOMENCLATURE 1234567	EFF CODE	UNITS PER ASSY
030A	0-112-0015-2000		. . . STRIP-SLIDING USE AS REQUIRED used on 010A, 010B, 010C, 010D, 010E, 010F, 010G, 010H, 010J, 010K, 010L, 010M, 010N		AR
040A	A225400211-210		. . . PLATE-SCUFF used on 010A, 010B, 010C, 010D, 010E, 010F, 010G, 010H, 010K, 010L, 010M, 010N		001
-040B	A225400216-204		. . . PLATE-SCUFF used on 010J		001
-050A	NSA935405-01		. . . MOUNT USE AS REQUIRED used on 010A, 010B, 010C, 010D, 010E, 010F, 010G, 010H, 010J, 010K, 010L, 010M, 010N		AR
060A	A225400232-208		. . . FITTING used on 010A, 010B, 010C, 010D, 010E, 010F, 010G, 010H, 010J, 010K, 010L, 010M, 010N		002
070A	ABS0704-6-50		. . . SCREW used on 010A, 010B, 010C, 010D, 010E, 010F, 010G, 010H, 010J, 010K, 010L, 010M, 010N		004
-080A	NAS1833C08-370		. . . INSERT USE AS REQUIRED used on 010A, 010B, 010C, 010D, 010E, 010F, 010G, 010H, 010J, 010K, 010L, 010M, 010N		AR
-090A	NAS1835C08		. . . INSERT used on 010A, 010B, 010C, 010D, 010E, 010F, 010G, 010H, 010J, 010K, 010L, 010M, 010N		015

- ITEM NOT ILLUSTRATED

FIG. ITEM	PART NUMBER	AIRLINE STOCK NUMBER	NOMENCLATURE 1234567	EFF CODE	UNITS PER ASSY
-100A	EF1842-06C2		. . . INSERT used on 010A, 010B, 010C, 010D, 010E, 010F, 010G, 010H, 010J, 010K, 010L, 010M, 010N		004
-110A	NSA5345-08C		. . . INSERT used on 010A, 010B, 010C, 010D, 010E, 010F, 010G, 010H, 010J, 010K, 010L, 010M, 010N		004
-115A	NSA5345-06C		. . . INSERT USE AS REQUIRED used on 010A, 010B, 010C, 010D, 010E, 010F, 010G, 010H, 010J, 010K, 010L, 010M, 010N		AR
120A	A2-254-0006-01		. . MIRROR-GLASS used on 001A, 001B, 001C, 001D, 001E, 001F, 001G, 001H, 001J, 001K, 001L, 001M, 001N, 001P		001
130A	A225400451-200		. . STUD used on 001A, 001B, 001C, 001D, 001E, 001F, 001G, 001H, 001J, 001K, 001L, 001M, 001N, 001P		001
140A	NAS1100-08-4		. . SCREW used on 001A, 001B, 001C, 001D, 001E, 001F, 001G, 001H, 001J, 001K, 001L, 001M, 001N, 001P		003
150A	A225400224-212		. . SECTION used on 001A, 001B, 001C, 001D, 001E, 001F, 001G, 001H, 001J, 001K, 001L, 001M, 001N, 001P		001

- ITEM NOT ILLUSTRATED

FIG. ITEM	PART NUMBER	AIRLINE STOCK NUMBER	NOMENCLATURE 1234567	EFF CODE	UNITS PER ASSY
160A	ABS0307A2-11		. . SECTION-SEALING USE AS REQUIRED BUY PN ABS0307AB2-11 used on 001A, 001B, 001C, 001D, 001E, 001F, 001G, 001H, 001J, 001K, 001L, 001M, 001N, 001P		AR
170A	A225400500-200		. . PLACARD used on 001A, 001B, 001C, 001D, 001E, 001F, 001G, 001H, 001J, 001K, 001L, 001M, 001N, 001P		001
180A	A225400500-202		. . PLACARD used on 001A, 001B, 001C, 001D, 001E, 001F, 001G, 001H, 001J, 001K, 001L, 001M, 001N		001
-180B	A225400500-204		. . PLACARD POST SB 25-1640 used on 001P		001
190A	NAS1801-3-10		. . SCREW POST SB 25-1640 used on 001A, 001B, 001C, 001D, 001E, 001F, 001G, 001H, 001J, 001K, 001L, 001M, 001N, 001P		001
200A	NAS1149C0332R		. . WASHER used on 001A, 001B, 001C, 001D, 001E, 001F, 001G, 001H, 001J, 001K, 001L, 001M, 001N, 001P		001
210A	1240-52		. . HOLDER-COSMETICS used on 001E		001
220A	NAS514P832-6		. . SCREW used on 001E		002

- ITEM NOT ILLUSTRATED

FIG. ITEM	PART NUMBER	AIRLINE STOCK NUMBER	NOMENCLATURE 1234567	EFF CODE	UNITS PER ASSY
230A	NAS1149CN832R		. . WASHER used on 001E		002

- ITEM NOT ILLUSTRATED

THIS PAGE IS INTENTIONALLY LEFT BLANK

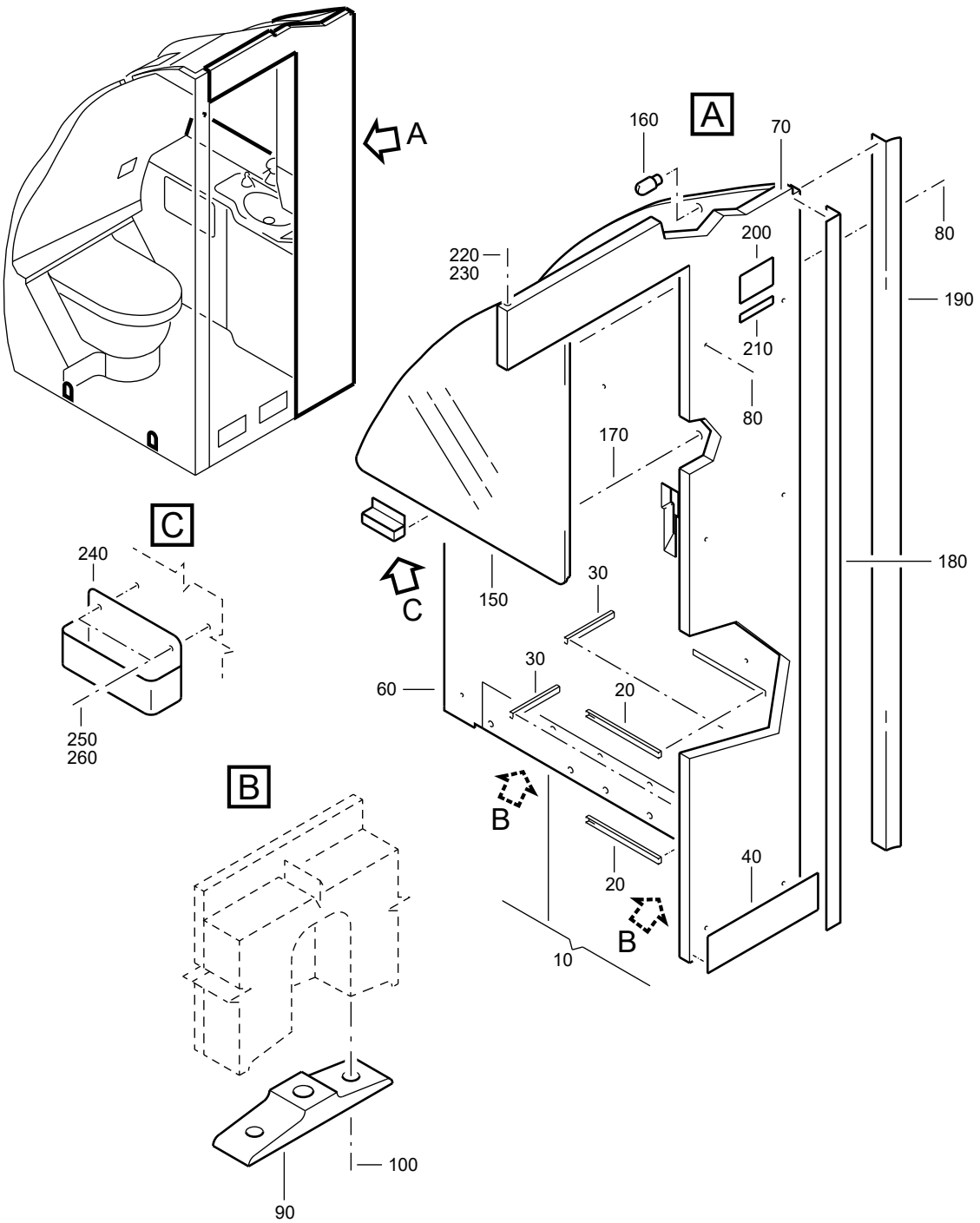

F_PL_254151_07_F_01_00

HOUSING
Figure 07F/EN254151SHEET07F01

FIG. ITEM	PART NUMBER	AIRLINE STOCK NUMBER	NOMENCLATURE 1234567	EFF CODE	UNITS PER ASSY
07F					
-001A	D2549030509066		. HOUSING NP used on 050B (25415101R), 050J (25415101W), 050A(25415101X) SEE 25-41-51-01R FOR NHA SEE 25-41-51-01W FOR NHA SEE 25-41-51-01X FOR NHA		RF
-001B	D2549020604666		. HOUSING NP used on 050A (25415101R) SEE 25-41-51-01R FOR NHA		RF
-001C	D2549020614666		. HOUSING NP used on 050J (25415101Q), 050A (25415141D) SEE 25-41-51-01Q FOR NHA SEE 25-41-51-41D FOR NHA		RF
-001D	D2549010600666		. HOUSING NP used on 050G (25415101S), 050B (25415101T), 050K (25415101Y) SEE 25-41-51-01S FOR NHA SEE 25-41-51-01T FOR NHA SEE 25-41-51-01Y FOR NHA		RF
-001E	D2549010600466		. HOUSING NP used on 050A (25415101T) SEE 25-41-51-01T FOR NHA		RF
-001F	D2549020701466		. HOUSING NP used on 050C (25415101T), 050B (25415141D), 050C(25415141K), 050C (25415141M) SEE 25-41-51-01T FOR NHA SEE 25-41-51-41D FOR NHA SEE 25-41-51-41K FOR NHA SEE 25-41-51-41M FOR NHA		RF

- ITEM NOT ILLUSTRATED

FIG. ITEM	PART NUMBER	AIRLINE STOCK NUMBER	NOMENCLATURE 1234567		EFF CODE	UNITS PER ASSY
-001G	D2549010601266		. HOUSING used on 050E (25415101T), 050D (254151410), 050D(25415141A), 050C (25415141H), 050B (25415141M) SEE 25-41-51-01T FOR NHA SEE 25-41-51-410 FOR NHA SEE 25-41-51-41A FOR NHA SEE 25-41-51-41H FOR NHA SEE 25-41-51-41M FOR NHA	NP		RF
-001H	D2549030510666		. HOUSING used on 050F (25415101T), 050D (25415101U), 050A(25415101Y), 050L (25415141G), 050K (25415141M) SEE 25-41-51-01T FOR NHA SEE 25-41-51-01U FOR NHA SEE 25-41-51-01Y FOR NHA SEE 25-41-51-41G FOR NHA SEE 25-41-51-41M FOR NHA	NP		RF
-001J	D2549030510866		. HOUSING used on 050G (25415101T), 050E (25415101V), 050G (25415141C), 050L (25415141D), 050G (25415141H), 050E (25415141K) SEE 25-41-51-01T FOR NHA SEE 25-41-51-01V FOR NHA SEE 25-41-51-41C FOR NHA SEE 25-41-51-41D FOR NHA SEE 25-41-51-41H FOR NHA SEE 25-41-51-41K FOR NHA	NP		RF
-001K	D2549030610266		. HOUSING used on 050D (25415141M) SEE 25-41-51-41M FOR NHA	NP		RF

- ITEM NOT ILLUSTRATED

FIG. ITEM	PART NUMBER	AIRLINE STOCK NUMBER	NOMENCLATURE 1234567	EFF CODE	UNITS PER ASSY
-001L	D2549030511066		. HOUSING NP used on 050F (25415101U), 050F (25415101X), 050H(254151410), 050G (25415141A) SEE 25-41-51-01U FOR NHA SEE 25-41-51-01X FOR NHA SEE 25-41-51-410 FOR NHA SEE 25-41-51-41A FOR NHA		RF
-001M	D2549010602066		. HOUSING NP used on 050H (25415101U), 050D (25415101X), 050F (25415141C) SEE 25-41-51-01U FOR NHA SEE 25-41-51-01X FOR NHA SEE 25-41-51-41C FOR NHA		RF
010A	A225401307-506		. . HOUSING ASSY used on 001A		001
-010B	A225401302-778		. . HOUSING ASSY used on 001B		001
-010C	A225401302-780		. . HOUSING ASSY used on 001C		001
-010D	A225401302-524		. . HOUSING ASSY used on 001D		001
-010E	A225401302-772		. . HOUSING ASSY used on 001E		001
-010F	A225401302-796		. . HOUSING ASSY used on 001F		001
-010G	A225401302-790		. . HOUSING ASSY used on 001G		001
-010H	A225401302-792		. . HOUSING ASSY used on 001H		001

- ITEM NOT ILLUSTRATED

FIG. ITEM	PART NUMBER	AIRLINE STOCK NUMBER	NOMENCLATURE 1234567	EFF CODE	UNITS PER ASSY
-010J	A225401302-518		. . HOUSING ASSY used on 001J		001
-010K	A225401302-804		. . HOUSING ASSY POST SB 25-1325 used on 001K		001
-010L	A225401302-794		. . HOUSING ASSY used on 001L		001
-010M	A225401302-520		. . HOUSING ASSY used on 001M		001
020A	0-112-0016-2000		. . . STRIP-SLIDING USE AS REQUIRED used on 010A, 010B, 010C, 010D, 010E, 010F, 010G, 010H, 010J, 010K, 010L, 010M		AR
030A	0-112-0015-2000		. . . STRIP-SLIDING USE AS REQUIRED used on 010A, 010B, 010C, 010D, 010E, 010F, 010G, 010H, 010J, 010K, 010L, 010M		AR
040A	A225400211-210		. . . PLATE-SCUFF used on 010A, 010B, 010C, 010D, 010E, 010F, 010G, 010H, 010J, 010K, 010L, 010M		001
-050A	NSA935405-01		. . . MOUNT used on 010A, 010B, 010C, 010D, 010E, 010F, 010G, 010H, 010J, 010K, 010L, 010M		035
060A	A225401213-200		. . . PLATE-ARMOR used on 010A, 010B		001
070A	A225401213-202		. . . PLATE-ARMOR used on 010A, 010B		001

- ITEM NOT ILLUSTRATED

FIG. ITEM	PART NUMBER	AIRLINE STOCK NUMBER	NOMENCLATURE 1234567	EFF CODE	UNITS PER ASSY
080A	NAS1102-08-7		. . . SCREW USE AS REQUIRED used on 010A, 010B		AR
090A	A225400232-208		. . . FITTING used on 010A, 010B, 010C, 010D, 010E, 010F, 010G, 010H, 010J, 010K, 010L, 010M		002
100A	ABS0704-6-50		. . . SCREW used on 010A, 010B, 010C, 010D, 010E, 010F, 010G, 010H, 010J, 010K, 010L, 010M		004
-110A	NAS1833C08-370		. . . INSERT USE AS REQUIRED used on 010A, 010B, 010C, 010D, 010E, 010F, 010G, 010H, 010J, 010K, 010L, 010M		AR
-120A	NAS1835C08		. . . INSERT USE AS REQUIRED used on 010A, 010B, 010C, 010D, 010E, 010F, 010G, 010H, 010J, 010K, 010L, 010M		AR
-130A	NSA5345-06C		. . . INSERT used on 010A, 010B, 010C, 010D, 010E, 010F, 010G, 010H, 010J, 010K, 010L, 010M		002
-140A	NSA5345-08C		. . . INSERT used on 010A, 010B, 010C, 010D, 010E, 010F, 010G, 010H, 010J, 010K, 010L, 010M		020
-145A	EF1842-06C2		. . . INSERT used on 010M		004

- ITEM NOT ILLUSTRATED

FIG. ITEM	PART NUMBER	AIRLINE STOCK NUMBER	NOMENCLATURE 1234567	EFF CODE	UNITS PER ASSY
150A	A2-254-0006-01		. . MIRROR-GLASS used on 001A, 001B, 001C, 001D, 001E, 001F, 001G, 001H, 001J, 001K, 001L, 001M		001
160A	A225400451-200		. . STUD used on 001A, 001B, 001C, 001D, 001E, 001F, 001G, 001H, 001J, 001K, 001L, 001M		001
170A	NAS1100-08-4		. . SCREW used on 001A, 001B, 001C, 001D, 001E, 001F, 001G, 001H, 001J, 001K, 001L, 001M		003
180A	A225400224-212		. . SECTION used on 001A, 001B, 001C, 001D, 001E, 001F, 001G, 001H, 001J, 001K, 001L, 001M		001
190A	ABS0307A2-11		. . SECTION-SEALING USE AS REQUIRED BUY PN ABS0307AB2-11 used on 001A, 001B, 001C, 001D, 001E, 001F, 001G, 001H, 001J, 001K, 001L, 001M		AR
200A	A225400500-200		. . PLACARD used on 001A, 001B, 001C, 001D, 001E, 001F, 001G, 001H, 001J, 001K, 001L, 001M		001
210A	A225400500-202		. . PLACARD used on 001A, 001B, 001C, 001D, 001E, 001F, 001G, 001H, 001J, 001K, 001L, 001M		001

- ITEM NOT ILLUSTRATED

FIG. ITEM	PART NUMBER	AIRLINE STOCK NUMBER	NOMENCLATURE 1234567	EFF CODE	UNITS PER ASSY
220A	NAS1096-3-10		. . SCREW BUY PN NAS1801-3-10 used on 001A, 001B, 001C, 001D, 001E, 001F, 001G, 001H, 001J, 001K, 001L, 001M		001
230A	NAS1149C0332R		. . WASHER used on 001A, 001B, 001C, 001D, 001E, 001F, 001G, 001H, 001J, 001K, 001L, 001M		001
240A	1240-52		. . HOLDER-COSMETICS used on 001C		001
250A	NAS514P832-6		. . SCREW used on 001C		002
260A	NAS1149CN832R		. . WASHER used on 001C		002

- ITEM NOT ILLUSTRATED

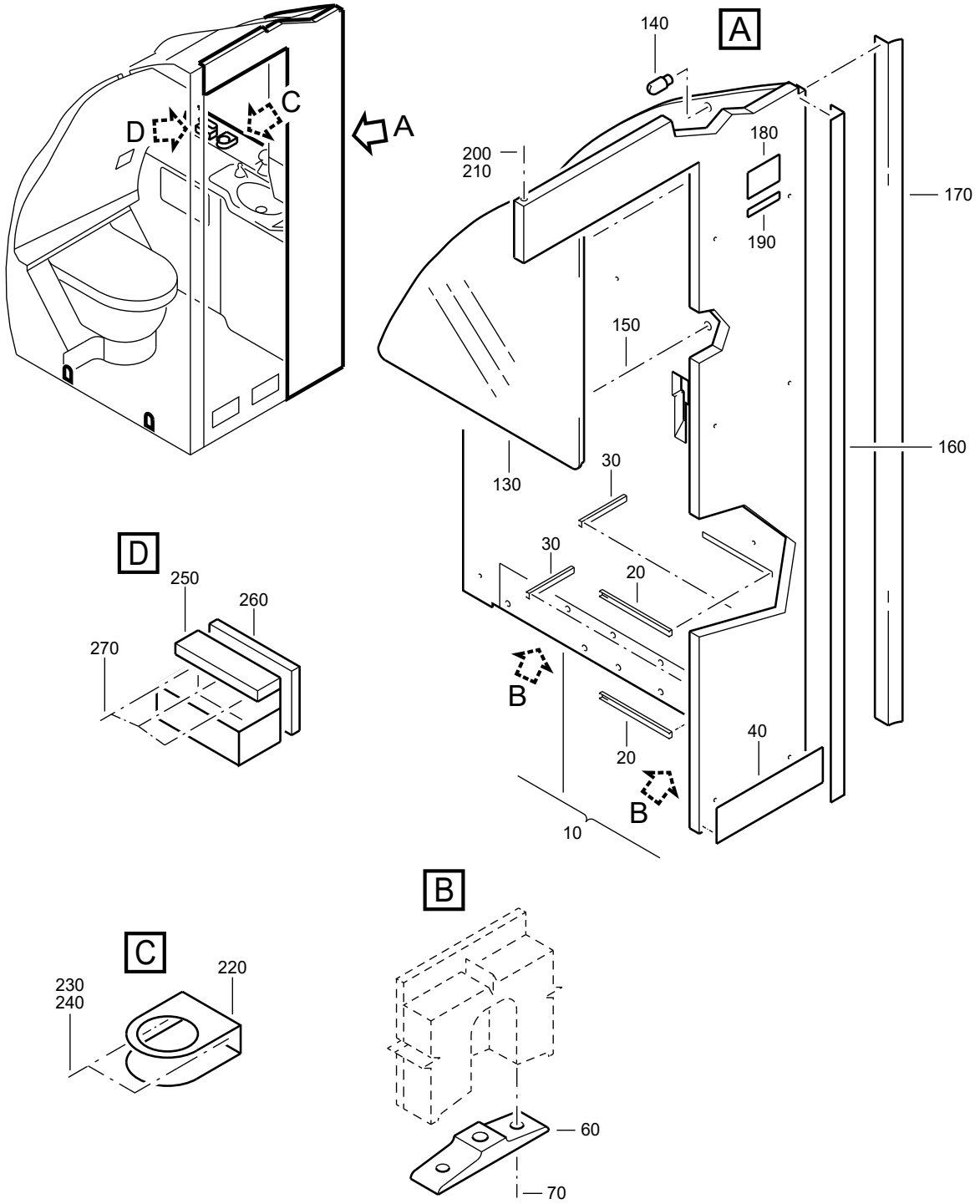

F_PL_254151_07_G_01_00

HOUSING
Figure 07G/EN254151SHEET07G01

FIG. ITEM	PART NUMBER	AIRLINE STOCK NUMBER	NOMENCLATURE 1234567		EFF CODE	UNITS PER ASSY
07G						
-001A	D2549030511666		. HOUSING used on 050J (25415101U), 050G (25415101Y), 050F (25415101Z), 050F (25415141A), 050G (25415141B), 050F (25415141D) SEE 25-41-51-01U FOR NHA SEE 25-41-51-01Y FOR NHA SEE 25-41-51-01Z FOR NHA SEE 25-41-51-41A FOR NHA SEE 25-41-51-41B FOR NHA SEE 25-41-51-41D FOR NHA	NP		RF
-001B	D2549020703466		. HOUSING PRE VSB A2-254-25-130 used on 050G (25415101X), 050B (254151410), 050D (25415141C), 050G (25415141F), 050L (25415141H) SEE 25-41-51-01X FOR NHA SEE 25-41-51-410 FOR NHA SEE 25-41-51-41C FOR NHA SEE 25-41-51-41F FOR NHA SEE 25-41-51-41H FOR NHA	NP		RF
-001C	D2549010602666		. HOUSING used on 050K (25415101X) SEE 25-41-51-01X FOR NHA	NP		RF
-001D	D2549030511266		. HOUSING used on 050G (25415101U), 050K (25415101V), 050H (25415141F) SEE 25-41-51-01U FOR NHA SEE 25-41-51-01V FOR NHA SEE 25-41-51-41F FOR NHA	NP		RF

- ITEM NOT ILLUSTRATED

FIG. ITEM	PART NUMBER	AIRLINE STOCK NUMBER	NOMENCLATURE 1234567		EFF CODE	UNITS PER ASSY
-001E	D2549020707266		. HOUSING used on 050C (254151410), 050F (25415141F), 050K(25415141H) SEE 25-41-51-410 FOR NHA SEE 25-41-51-41F FOR NHA SEE 25-41-51-41H FOR NHA	NP		RF
-001F	D2549010603666		. HOUSING used on 050E (254151410), 050E (25415141A), 050D(25415141L) SEE 25-41-51-410 FOR NHA SEE 25-41-51-41A FOR NHA SEE 25-41-51-41L FOR NHA	NP		RF
-001G	D2549020710066		. HOUSING used on 050B (25415141A) SEE 25-41-51-41A FOR NHA	NP		RF
-001H	D2549010606066		. HOUSING used on 050H (25415101Z), 050J (25415141F), 050A(25415141H), 050A (25415141K), 050A (25415141L), 050A(25415141M) SEE 25-41-51-01Z FOR NHA SEE 25-41-51-41F FOR NHA SEE 25-41-51-41H FOR NHA SEE 25-41-51-41K FOR NHA SEE 25-41-51-41L FOR NHA SEE 25-41-51-41M FOR NHA	NP		RF
-001J	D2549030604266		. HOUSING used on 050A (25415141G) SEE 25-41-51-41G FOR NHA	NP		RF
-001K	D2549030606066		. HOUSING PRE VSB A2-254-25-130 used on 050D (25415141K), 050E (25415141N) SEE 25-41-51-41K FOR NHA SEE 25-41-51-41N FOR NHA	NP		RF

- ITEM NOT ILLUSTRATED

FIG. ITEM	PART NUMBER	AIRLINE STOCK NUMBER	NOMENCLATURE 1234567		EFF CODE	UNITS PER ASSY
-001L	D2549030606466		. HOUSING used on 050F (25415141G) SEE 25-41-51-41G FOR NHA	NP		RF
-001M	D2549010601066		. HOUSING used on 050A (25415101N), 050M (25415101Q), 050M (25415141D) SEE 25-41-51-01N FOR NHA SEE 25-41-51-01Q FOR NHA SEE 25-41-51-41D FOR NHA	NP		RF
-001N	R22540119604666		. HOUSING POST VSB A2-254-25-130 used on 050N (254151410), 050L (25415141K), 050L (25415141N) SEE 25-41-51-410 FOR NHA SEE 25-41-51-41K FOR NHA SEE 25-41-51-41N FOR NHA	NP		RF
010A	A225401302-704		. . HOUSING ASSY used on 001A, 001L			001
-010B	A225401302-610		. . HOUSING ASSY PRE VSB A2-254-25-130 used on 001B, 001K			001
-010C	A225401302-534		. . HOUSING ASSY used on 001C			001
-010D	A225401302-798		. . HOUSING ASSY used on 001D			001
-010E	A225401302-720		. . HOUSING ASSY used on 001E			001
-010F	A225401302-612		. . HOUSING ASSY used on 001F			001
-010G	A225401302-614		. . HOUSING ASSY used on 001G			001

- ITEM NOT ILLUSTRATED

FIG. ITEM	PART NUMBER	AIRLINE STOCK NUMBER	NOMENCLATURE 1234567	EFF CODE	UNITS PER ASSY
-010H	A225401302-500		. . HOUSING ASSY used on 001H		001
-010J	A225401302-600		. . HOUSING ASSY used on 001J		001
-010K	A2254013028510		. . HOUSING ASSY POST SB 25-1314 used on 001M		001
-010L	A225401302-622		. . HOUSING ASSY POST VSB A2-254-25-130 used on 001N		001
020A	0-112-0016-2000		. . . STRIP-SLIDING USE AS REQUIRED used on 010A, 010B, 010C, 010D, 010E, 010F, 010G, 010H, 010J, 010K, 010L		AR
030A	0-112-0015-2000		. . . STRIP-SLIDING USE AS REQUIRED used on 010A, 010B, 010C, 010D, 010E, 010F, 010G, 010H, 010J, 010K, 010L		AR
040A	A225400211-210		. . . PLATE-SCUFF used on 010A, 010B, 010C, 010D, 010E, 010F, 010G, 010H, 010J, 010K, 010L		001
-050A	NSA935405-01		. . . MOUNT USE AS REQUIRED used on 010A, 010B, 010C, 010D, 010E, 010F, 010G, 010H, 010J, 010K, 010L		AR

- ITEM NOT ILLUSTRATED

FIG. ITEM	PART NUMBER	AIRLINE STOCK NUMBER	NOMENCLATURE 1234567	EFF CODE	UNITS PER ASSY
060A	A225400232-208		. . . FITTING used on 010A, 010B, 010C, 010D, 010E, 010F, 010G, 010H, 010J, 010K, 010L		002
070A	ABS0704-6-50		. . . SCREW used on 010A, 010B, 010C, 010D, 010E, 010F, 010G, 010H, 010J, 010K, 010L		004
-080A	NAS1833C08-370		. . . INSERT used on 010A, 010B, 010C, 010D, 010E, 010F, 010G, 010H, 010J, 010K, 010L		082
-090A	NAS1835C08		. . . INSERT used on 010A, 010B, 010C, 010D, 010E, 010F, 010G, 010H, 010J, 010K, 010L		015
-100A	NSA5345-06C		. . . INSERT used on 010A, 010C, 010H, 010J, 010K		001
-110A	NSA5345-08C		. . . INSERT used on 010A, 010B, 010C, 010D, 010E, 010F, 010G, 010H, 010J, 010K, 010L		004
-120A	EF1842-06C2		. . . INSERT used on 010A, 010B, 010C, 010D, 010E, 010F, 010G, 010H, 010J, 010K, 010L		004
130A	A2-254-0006-01		. . MIRROR-GLASS PRE VSB A2-254-25-130 used on 001A, 001B, 001C, 001D, 001E, 001F, 001G, 001H, 001J, 001K, 001L, 001M		001

- ITEM NOT ILLUSTRATED

FIG. ITEM	PART NUMBER	AIRLINE STOCK NUMBER	NOMENCLATURE 1234567	EFF CODE	UNITS PER ASSY
-130B	A225400470-000		. . MIRROR-GLASS POST VSB A2-254-25-130 used on 001N		001
140A	A225400451-200		. . STUD used on 001A, 001B, 001C, 001D, 001E, 001F, 001G, 001H, 001J, 001K, 001L, 001M, 001N		001
150A	NAS1100-08-4		. . SCREW used on 001A, 001B, 001C, 001D, 001E, 001F, 001G, 001H, 001J, 001K, 001L, 001M, 001N		003
160A	A225400224-212		. . SECTION used on 001A, 001B, 001C, 001D, 001E, 001F, 001G, 001H, 001J, 001K, 001L, 001M, 001N		001
170A	ABS0307A2-11		. . SECTION-SEALING USE AS REQUIRED BUY PN ABS0307AB2-11 used on 001A, 001B, 001C, 001D, 001E, 001F, 001G, 001H, 001J, 001K, 001L, 001M, 001N		AR
180A	A225400500-200		. . PLACARD used on 001A, 001B, 001C, 001D, 001E, 001F, 001G, 001H, 001J, 001K, 001L, 001M, 001N		001
190A	A225400500-202		. . PLACARD used on 001A, 001B, 001C, 001D, 001E, 001F, 001G, 001H, 001J, 001K, 001L, 001M, 001N		001

- ITEM NOT ILLUSTRATED

FIG. ITEM	PART NUMBER	AIRLINE STOCK NUMBER	NOMENCLATURE 1234567	EFF CODE	UNITS PER ASSY
200A	NAS1096-3-10		. . SCREW BUY PN NAS1801-3-10 used on 001A, 001B, 001C, 001D, 001E, 001F, 001G, 001H, 001J, 001K, 001L, 001M, 001N		001
210A	NAS1149C0332R		. . WASHER used on 001A, 001B, 001C, 001D, 001E, 001F, 001G, 001H, 001J, 001K, 001L, 001M, 001N		001
220A	4C255061-1		. . HOLDER-SOAP DISPENSER used on 001D	1E-431	001
230A	NAS1100-04-7		. . SCREW used on 001D		002
240A	NAS1149CN432R		. . WASHER used on 001D		002
250A	B0040418-21		. . HOLDER-COSMETICS used on 001D		001
260A	A325400472-204		. . SPACER used on 001D		001
270A	NAS1304-2		. . BOLT BUY PN NAS6604-2 used on 001D		003

- ITEM NOT ILLUSTRATED

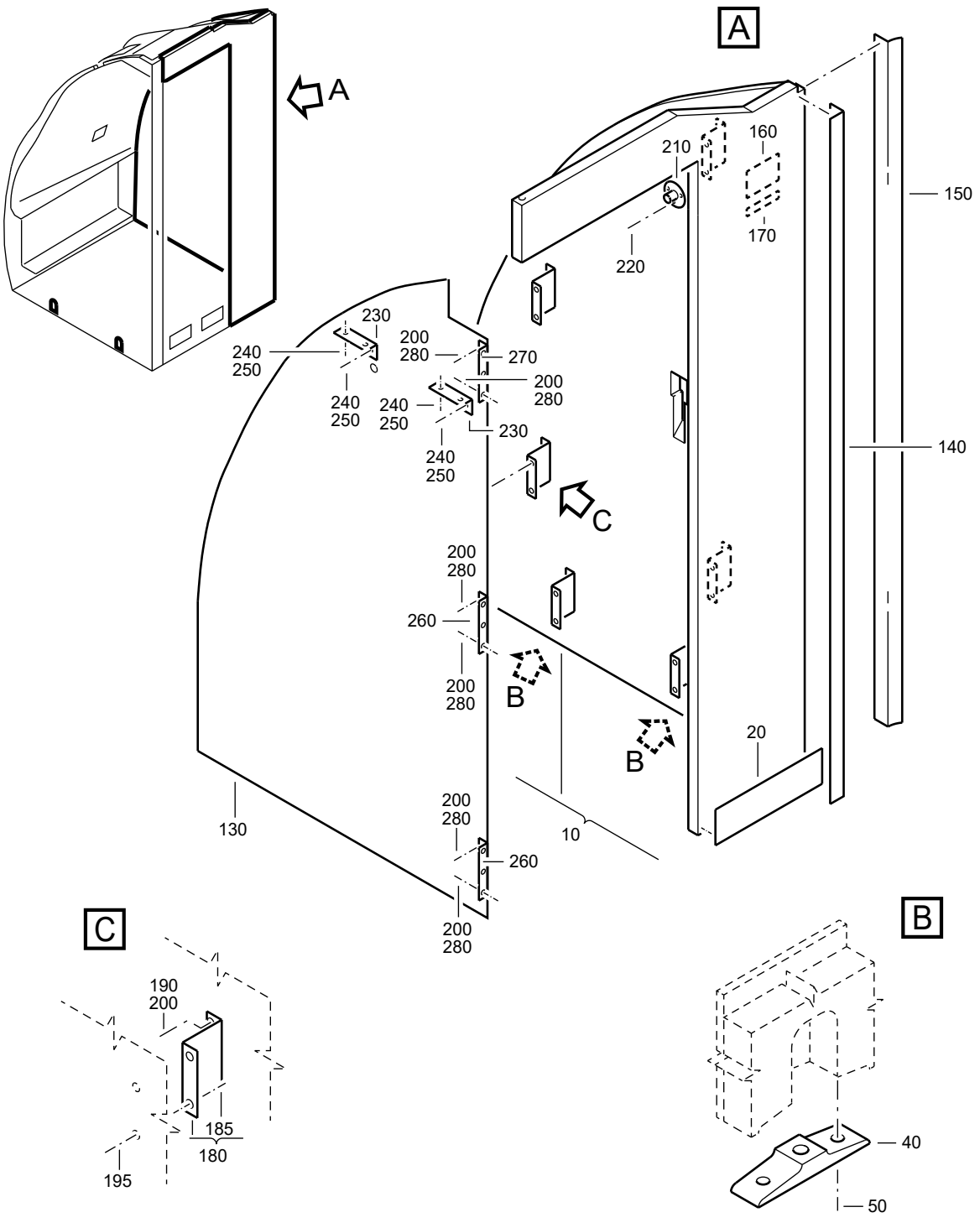

F_PL_254151_07_H_01_00

HOUSING
Figure 07H/EN254151SHEET07H01

FIG. ITEM	PART NUMBER	AIRLINE STOCK NUMBER	NOMENCLATURE 1234567	EFF CODE	UNITS PER ASSY
07H					
-001A	D2549020712066		. HOUSING NP used on 050A (25415141E) SEE 25-41-51-41E FOR NHA		RF
010A	A225401302-730		. . HOUSING ASSY used on 001A		001
020A	A225400211-210		. . . PLATE-SCUFF used on 010A		001
-030A	NSA935405-01		. . . MOUNT used on 010A		035
040A	A225400232-208		. . . FITTING used on 010A		002
050A	ABS0704-6-50		. . . SCREW used on 010A		004
-060A	NAS1833C08-370		. . . INSERT used on 010A		107
-070A	NAS1835C08		. . . INSERT used on 010A		013
-080A	NSA5345-06C		. . . INSERT used on 010A		005
-090A	NSA5345-08C		. . . INSERT used on 010A		004
-100A	EF1842-06C2		. . . INSERT used on 010A		004
-110A	NAS1833C3-370		. . . INSERT used on 010A		004
130A	A225401238-502		. . PANEL ASSY-DECOR,SIDE WALL used on 001A		001

- ITEM NOT ILLUSTRATED

FIG. ITEM	PART NUMBER	AIRLINE STOCK NUMBER	NOMENCLATURE 1234567	EFF CODE	UNITS PER ASSY
140A	A225400224-212		. . SECTION used on 001A		001
150A	ABS0307A2-11		. . SECTION-SEALING USE AS REQUIRED BUY PN ABS0307AB2-11 used on 001A		AR
160A	A225400500-200		. . PLACARD used on 001A		001
170A	A225400500-202		. . PLACARD used on 001A		001
180A	A225401238-010		. . ANGLE-Z used on 001A		006
185A	NSA5067-08-1		. . . NUT used on 180A		002
190A	NAS1096-2-7		. . SCREW BUY PN NAS1801-08-7 used on 001A		010
195A	NAS514P832-14		. . SCREW used on 001A		010
200A	NAS1149CN832R		. . WASHER used on 001A		040
210A	A325200401-200		. . BRACKET used on 001A		001
220A	NAS514P832-6		. . SCREW used on 001A		003
230A	A225401238-200		. . ANGLE-L used on 001A		002
240A	NAS1096-2-9		. . SCREW BUY PN NAS1801-08-9 used on 001A		008

- ITEM NOT ILLUSTRATED

FIG. ITEM	PART NUMBER	AIRLINE STOCK NUMBER	NOMENCLATURE 1234567	EFF CODE	UNITS PER ASSY
250A	ASNA0113-40ADL		. . WASHER used on 001A		008
260A	A225400450-212		. . ANGLE used on 001A		002
270A	A225400450-218		. . ANGLE-L used on 001A		001
280A	NAS1096-2-5		. . SCREW BUY PN NAS1801-08-5 used on 001A		016

- ITEM NOT ILLUSTRATED

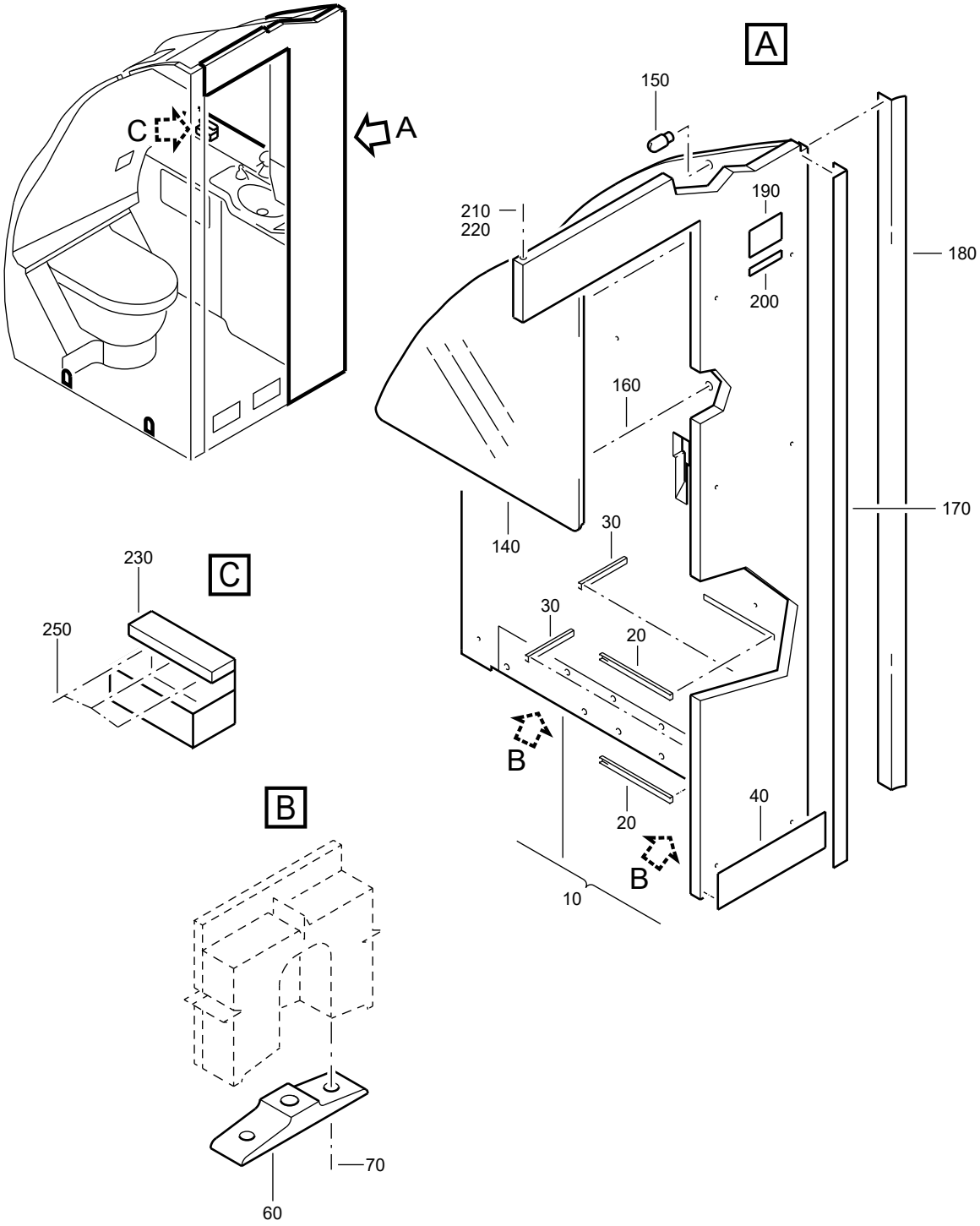

F_PL_254151_07_J_01_00

HOUSING
Figure 07J/EN254151SHEET07J01

FIG. ITEM	PART NUMBER	AIRLINE STOCK NUMBER	NOMENCLATURE 1234567	EFF CODE	UNITS PER ASSY
07J					
-001A	D2549020701666		. HOUSING NP used on 050J (25415141A) SEE 25-41-51-41A FOR NHA		RF
-001B	D2549030607866		. HOUSING NP used on 050H (25415141H) SEE 25-41-51-41H FOR NHA		RF
-001C	D2549020713066		. HOUSING NP used on 050B (25415141J) SEE 25-41-51-41J FOR NHA		RF
-001D	D2549030607266		. HOUSING NP used on 050H (25415141A), 050E (25415141H), 050C (25415141J), 050F (25415141L) SEE 25-41-51-41A FOR NHA SEE 25-41-51-41H FOR NHA SEE 25-41-51-41J FOR NHA SEE 25-41-51-41L FOR NHA		RF
-001E	D2549030600266		. HOUSING NP used on 050E (25415141J), 050C (25415141L) SEE 25-41-51-41J FOR NHA SEE 25-41-51-41L FOR NHA		RF
-001F	D2549010605266		. HOUSING NP used on 050B (25415141K) SEE 25-41-51-41K FOR NHA		RF
-001G	D2549020509666		. HOUSING NP used on 050F (25415141J), 050B (25415141L) SEE 25-41-51-41J FOR NHA SEE 25-41-51-41L FOR NHA		RF

- ITEM NOT ILLUSTRATED

FIG. ITEM	PART NUMBER	AIRLINE STOCK NUMBER	NOMENCLATURE 1234567	EFF CODE	UNITS PER ASSY
-001H	D2549010606666		. HOUSING NP used on 050G (25415141J), 050K (25415141K), 050G(25415141L) SEE 25-41-51-41J FOR NHA SEE 25-41-51-41K FOR NHA SEE 25-41-51-41L FOR NHA		RF
-001J	D2549020705866		. HOUSING NP used on 050H (25415141J) SEE 25-41-51-41J FOR NHA		RF
-001K	D2549030503866		. HOUSING NP used on 050J (25415141K) SEE 25-41-51-41K FOR NHA		RF
-001L	D2549010606866		. HOUSING NP used on 050K (25415141J) SEE 25-41-51-41J FOR NHA		RF
-001M	D2549020505666		. HOUSING NP used on 050E (25415141L) SEE 25-41-51-41L FOR NHA		RF
-001N	D2549030513266		. HOUSING NP used on 050L (25415101V) SEE 25-41-51-01V FOR NHA		RF
010A	A225401302-502		. . HOUSING ASSY used on 001A		001
-010B	A225401302-608		. . HOUSING ASSY used on 001B		001
-010C	A225401303-784		. . HOUSING ASSY POST SB 25-1551 used on 001C		001
-010D	A225401302-602		. . HOUSING ASSY used on 001D		001

- ITEM NOT ILLUSTRATED

FIG. ITEM	PART NUMBER	AIRLINE STOCK NUMBER	NOMENCLATURE 1234567	EFF CODE	UNITS PER ASSY
-010E	A225401302-522		. . HOUSING ASSY used on 001E		001
-010F	A225401302-616		. . HOUSING ASSY used on 001F		001
-010G	A225401302-604		. . HOUSING ASSY used on 001G		001
-010H	A225401302-618		. . HOUSING ASSY used on 001H		001
-010J	A225401302-514		. . HOUSING ASSY used on 001J		001
-010K	A225401302-800		. . HOUSING ASSY used on 001K		001
-010L	A225401302-526		. . HOUSING ASSY used on 001L		001
-010M	A225401302-530		. . HOUSING ASSY used on 001M		001
-010N	A225401302-802		. . HOUSING ASSY POST SB 25-1315 used on 001N		001
020A	0-112-0016-2000		. . . STRIP-SLIDING USE AS REQUIRED used on 010A, 010B, 010C, 010D, 010E, 010F, 010G, 010H, 010J, 010K, 010L, 010M, 010N		AR
030A	0-112-0015-2000		. . . STRIP-SLIDING USE AS REQUIRED used on 010A, 010B, 010C, 010D, 010E, 010F, 010G, 010H, 010J, 010K, 010L, 010M, 010N		AR

- ITEM NOT ILLUSTRATED

FIG. ITEM	PART NUMBER	AIRLINE STOCK NUMBER	NOMENCLATURE 1234567	EFF CODE	UNITS PER ASSY
040A	A225400211-210		. . . PLATE-SCUFF used on 010A, 010B, 010C, 010D, 010E, 010F, 010G, 010H, 010J, 010K, 010L, 010M, 010N		001
-050A	NSA935405-01		. . . MOUNT used on 010A, 010B, 010C, 010D, 010E, 010F, 010G, 010H, 010J, 010K, 010L, 010M, 010N		035
060A	A225400232-208		. . . FITTING used on 010A, 010B, 010C, 010D, 010E, 010F, 010G, 010H, 010J, 010K, 010L, 010M, 010N		002
070A	ABS0704-6-50		. . . SCREW used on 010A, 010B, 010C, 010D, 010E, 010F, 010G, 010H, 010J, 010K, 010L, 010M, 010N		004
-080A	NAS1833C08-370		. . . INSERT used on 010A, 010B, 010C, 010D, 010E, 010F, 010G, 010H, 010J, 010K, 010L, 010M, 010N		084
-090A	NAS1835C08		. . . INSERT used on 010A, 010B, 010C, 010D, 010E, 010F, 010G, 010H, 010J, 010K, 010L, 010M, 010N		015
-100A	EF1842-06C2		. . . INSERT used on 010A, 010B, 010C, 010D, 010E, 010F, 010G, 010H, 010J, 010K, 010L, 010M, 010N		004
-110A	NSA5345-08C		. . . INSERT used on 010A, 010B, 010C, 010D, 010E, 010F, 010G, 010H, 010J, 010K, 010L, 010M, 010N		004

- ITEM NOT ILLUSTRATED

FIG. ITEM	PART NUMBER	AIRLINE STOCK NUMBER	NOMENCLATURE 1234567	EFF CODE	UNITS PER ASSY
-120A	NSA5345-06C		. . . INSERT used on 010A, 010B, 010C, 010D, 010E, 010F, 010G, 010H, 010J, 010K, 010L, 010M, 010N		005
140A	A2-254-0006-01		. . MIRROR-GLASS used on 001A, 001B, 001C, 001D, 001E, 001F, 001G, 001H, 001J, 001K, 001L, 001M, 001N		001
150A	A225400451-200		. . STUD used on 001A, 001B, 001C, 001D, 001E, 001F, 001G, 001H, 001J, 001K, 001L, 001M, 001N		001
160A	NAS1100-08-4		. . SCREW used on 001A, 001B, 001C, 001D, 001E, 001F, 001G, 001H, 001J, 001K, 001L, 001M, 001N		003
170A	A225400224-212		. . SECTION used on 001A, 001B, 001C, 001D, 001E, 001F, 001G, 001H, 001J, 001K, 001L, 001M, 001N		001
180A	ABS0307A2-11		. . SECTION-SEALING USE AS REQUIRED BUY PN ABS0307AB2-11 used on 001A, 001B, 001C, 001D, 001E, 001F, 001G, 001H, 001J, 001K, 001L, 001M		AR
-180B	ABS0307A2-11		. . SECTION-SEALING USE AS REQUIRED BUY PN ABS0307AB2-11 used on 001N		AR

- ITEM NOT ILLUSTRATED

FIG. ITEM	PART NUMBER	AIRLINE STOCK NUMBER	NOMENCLATURE 1234567	EFF CODE	UNITS PER ASSY
190A	A225400500-200		. . PLACARD used on 001A, 001B, 001C, 001D, 001E, 001F, 001G, 001H, 001J, 001K, 001L, 001M, 001N		001
200A	A225400500-202		. . PLACARD used on 001A, 001B, 001C, 001D, 001E, 001F, 001G, 001H, 001J, 001K, 001L, 001M, 001N		001
210A	NAS1096-3-10		. . SCREW BUY PN NAS1801-3-10 used on 001A, 001B, 001C, 001D, 001E, 001F, 001G, 001H, 001J, 001K, 001L, 001M, 001N		001
220A	NAS1149C0332R		. . WASHER used on 001A, 001B, 001C, 001D, 001E, 001F, 001G, 001H, 001J, 001K, 001L, 001M, 001N		001
230A	1240-77		. . HOLDER-COSMETICS used on 001K		001
250A	NAS1304-2		. . BOLT BUY PN NAS6604-2 used on 001K		003

- ITEM NOT ILLUSTRATED

THIS PAGE IS INTENTIONALLY LEFT BLANK

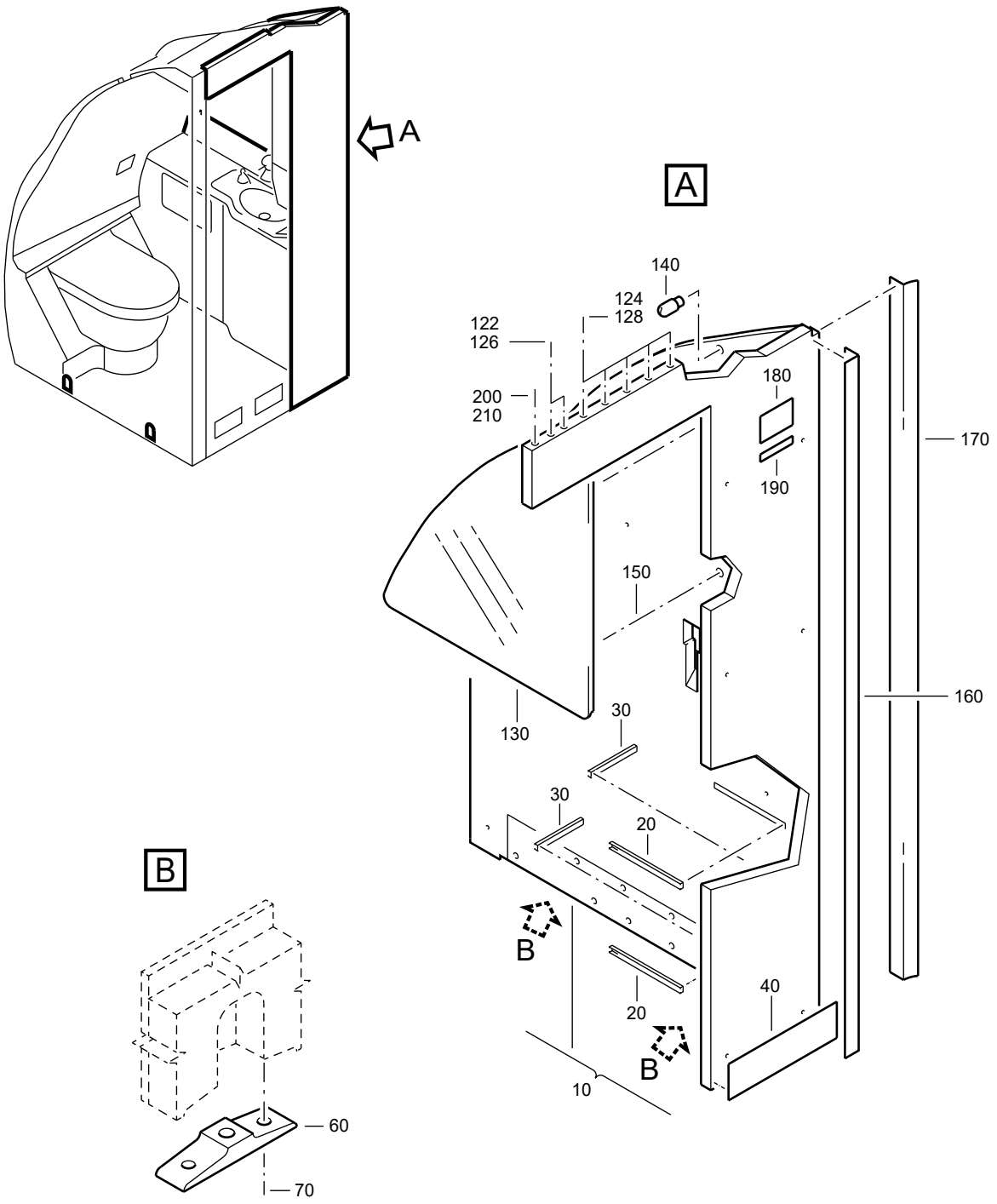

F_PL_254151_07_K_01_00

HOUSING
Figure 07K/EN254151SHEET07K01

FIG. ITEM	PART NUMBER	AIRLINE STOCK NUMBER	NOMENCLATURE 1234567		EFF CODE	UNITS PER ASSY
07K						
-001A	D2549030611466		. HOUSING used on 050E (25415141M) SEE 25-41-51-41M FOR NHA	NP		RF
-001B	D2549030611266		. HOUSING used on 050F (25415141M) SEE 25-41-51-41M FOR NHA	NP		RF
-001C	D2549010607266		. HOUSING used on 050G (25415141M) SEE 25-41-51-41M FOR NHA	NP		RF
-001D	D2549030610666		. HOUSING used on 050H (25415141M) SEE 25-41-51-41M FOR NHA	NP		RF
-001E	D2549030612866		. HOUSING used on 050J (25415141M), 050C (25415141T) SEE 25-41-51-41M FOR NHA SEE 25-41-51-41T FOR NHA	NP		RF
-001F	D2549030608066		. HOUSING PRE VSB A2-254-25-131 used on 050H (25415141L), 050C (25415141P), 050E(25415141S) SEE 25-41-51-41L FOR NHA SEE 25-41-51-41P FOR NHA SEE 25-41-51-41S FOR NHA	NP		RF
-001G	D2549030611066		. HOUSING used on 050J (25415141R) SEE 25-41-51-41R FOR NHA	NP		RF
-001H	D2549010609066		. HOUSING used on 050A (25415141N) SEE 25-41-51-41N FOR NHA	NP		RF

- ITEM NOT ILLUSTRATED

FIG. ITEM	PART NUMBER	AIRLINE STOCK NUMBER	NOMENCLATURE 1234567		EFF CODE	UNITS PER ASSY
-001J	D2549010609466		. HOUSING used on 050B (25415141N) SEE 25-41-51-41N FOR NHA	NP		RF
-001K	D2549030613466		. HOUSING used on 050J (25415141L) SEE 25-41-51-41L FOR NHA	NP		RF
-001L	D2549030613266		. HOUSING used on 050D (25415141N) SEE 25-41-51-41N FOR NHA	NP		RF
-001M	D2549020802666		. HOUSING used on 050A (25415141S) SEE 25-41-51-41S FOR NHA	NP		RF
-001N	R22540161400066		. HOUSING POST VSB A2-254-25-131 used on 050L (25415141L) SEE 25-41-51-41L FOR NHA	NP		RF
010A	A225401302-508		. . HOUSING ASSY used on 001A			001
-010B	A225401302-770		. . HOUSING ASSY used on 001B			001
-010C	A225401302-850		. . HOUSING ASSY used on 001C			001
-010D	A225401302-752		. . HOUSING ASSY used on 001D			001
-010E	A225401303-652		. . HOUSING ASSY used on 001E			001
-010F	A225401303-656		. . HOUSING ASSY PRE VSB A2-254-25-131 used on 001F			001

- ITEM NOT ILLUSTRATED

FIG. ITEM	PART NUMBER	AIRLINE STOCK NUMBER	NOMENCLATURE 1234567	EFF CODE	UNITS PER ASSY
-010G	A225401303-504		. . HOUSING ASSY used on 001G		001
-010H	A2254013038502		. . HOUSING ASSY POST SB 25-1314 used on 001H		001
-010J	A225401303-752		. . HOUSING ASSY used on 001J		001
-010K	A225401303-506		. . HOUSING ASSY used on 001K		001
-010L	A225401303-650		. . HOUSING ASSY used on 001L		001
-010M	A2254013038506		. . HOUSING ASSY used on 001M		001
-010N	A225401303-786		. . HOUSING ASSY POST VSB A2-254-25-131 used on 001N		001
020A	0-112-0016-2000		. . . STRIP-SLIDING USE AS REQUIRED used on 010A, 010B, 010C, 010D, 010E, 010F, 010G, 010H, 010J, 010K, 010L, 010M, 010N		AR
030A	0-112-0015-2000		. . . STRIP-SLIDING USE AS REQUIRED used on 010A, 010B, 010C, 010D, 010E, 010F, 010G, 010H, 010J, 010K, 010L, 010M, 010N		AR
040A	A225400211-210		. . . PLATE-SCUFF used on 010A, 010B, 010C, 010D, 010E, 010F, 010G, 010H, 010J, 010K, 010L, 010M, 010N		001

- ITEM NOT ILLUSTRATED

FIG. ITEM	PART NUMBER	AIRLINE STOCK NUMBER	NOMENCLATURE 1234567	EFF CODE	UNITS PER ASSY
-050A	NSA935405-01		. . . MOUNT USE AS REQUIRED used on 010A, 010B, 010C, 010D, 010E, 010F, 010G, 010H, 010J, 010K, 010L, 010M, 010N		AR
060A	A225400232-208		. . . FITTING used on 010A, 010B, 010C, 010D, 010E, 010F, 010G, 010H, 010J, 010K, 010L, 010M, 010N		002
070A	ABS0704-6-50		. . . SCREW used on 010A, 010B, 010C, 010D, 010E, 010F, 010G, 010H, 010J, 010K, 010L, 010M, 010N		004
-080A	NAS1833C08-370		. . . INSERT used on 010A, 010B, 010C, 010D, 010E, 010F, 010G, 010H, 010J, 010K, 010L, 010M, 010N		082
-090A	NAS1835C08		. . . INSERT USE AS REQUIRED used on 010A, 010B, 010C, 010D, 010E, 010F, 010G, 010H, 010J, 010K, 010L, 010M, 010N		AR
-100A	NSA5345-06C		. . . INSERT used on 010A, 010B, 010C, 010D, 010E, 010F, 010G, 010H, 010J, 010K, 010M, 010N		004
-110A	NSA5345-08C		. . . INSERT used on 010A, 010B, 010C, 010D, 010E, 010F, 010G, 010H, 010J, 010K, 010L, 010M, 010N		004

- ITEM NOT ILLUSTRATED

FIG. ITEM	PART NUMBER	AIRLINE STOCK NUMBER	NOMENCLATURE 1234567	EFF CODE	UNITS PER ASSY
-120A	EF1842-06C2		. . . INSERT used on 010A, 010B, 010C, 010D, 010E, 010F, 010G, 010H, 010J, 010K, 010L, 010M, 010N		004
122A	NAS1096-2-8		. . . SCREW BUY PN NAS1801-08-8 used on 010A, 010B, 010C, 010D, 010E, 010F, 010G, 010H, 010J, 010K, 010L, 010M, 010N		002
124A	NAS1096-3-8		. . . SCREW BUY PN NAS1801-3-8 used on 010A, 010B, 010C, 010D, 010E, 010F, 010G, 010H, 010J, 010K, 010L, 010M, 010N		005
126A	NAS1149CN832R		. . . WASHER used on 010A, 010B, 010C, 010D, 010E, 010F, 010G, 010H, 010J, 010K, 010L, 010M, 010N		002
128A	NAS1149C0332R		. . . WASHER used on 010A, 010B, 010C, 010D, 010E, 010F, 010G, 010H, 010J, 010K, 010L, 010M, 010N		005
130A	A2-254-0006-01		. . MIRROR-GLASS used on 001A, 001B, 001C, 001D, 001E, 001F, 001G, 001H, 001J, 001K, 001L, 001M, 001N		001
140A	A225400451-200		. . STUD used on 001A, 001B, 001C, 001D, 001E, 001F, 001G, 001H, 001J, 001K, 001L, 001M, 001N		001

- ITEM NOT ILLUSTRATED

FIG. ITEM	PART NUMBER	AIRLINE STOCK NUMBER	NOMENCLATURE 1234567	EFF CODE	UNITS PER ASSY
150A	NAS1100-08-4		. . SCREW used on 001A, 001B, 001C, 001D, 001E, 001F, 001G, 001H, 001J, 001K, 001L, 001M, 001N		003
160A	A225400224-212		. . SECTION used on 001A, 001B, 001C, 001D, 001E, 001F, 001G, 001H, 001J, 001K, 001L, 001M, 001N		001
170A	ABS0307A2-11		. . SECTION-SEALING USE AS REQUIRED BUY PN ABS0307AB2-11 used on 001A, 001B, 001C, 001D, 001E, 001F, 001G, 001H, 001J, 001K, 001L, 001M, 001N		AR
180A	A225400500-200		. . PLACARD used on 001A, 001B, 001C, 001D, 001E, 001F, 001G, 001H, 001J, 001K, 001L, 001M, 001N		001
190A	A225400500-202		. . PLACARD used on 001A, 001B, 001C, 001D, 001E, 001F, 001G, 001H, 001J, 001K, 001L, 001M, 001N		001
200A	NAS1096-3-10		. . SCREW BUY PN NAS1801-3-10 used on 001A, 001B, 001C, 001D, 001E, 001F, 001G, 001H, 001J, 001K, 001L, 001M, 001N		001
210A	NAS1149C0332R		. . WASHER used on 001A, 001B, 001C, 001D, 001E, 001F, 001G, 001H, 001J, 001K, 001L, 001M, 001N		001

- ITEM NOT ILLUSTRATED

THIS PAGE IS INTENTIONALLY LEFT BLANK

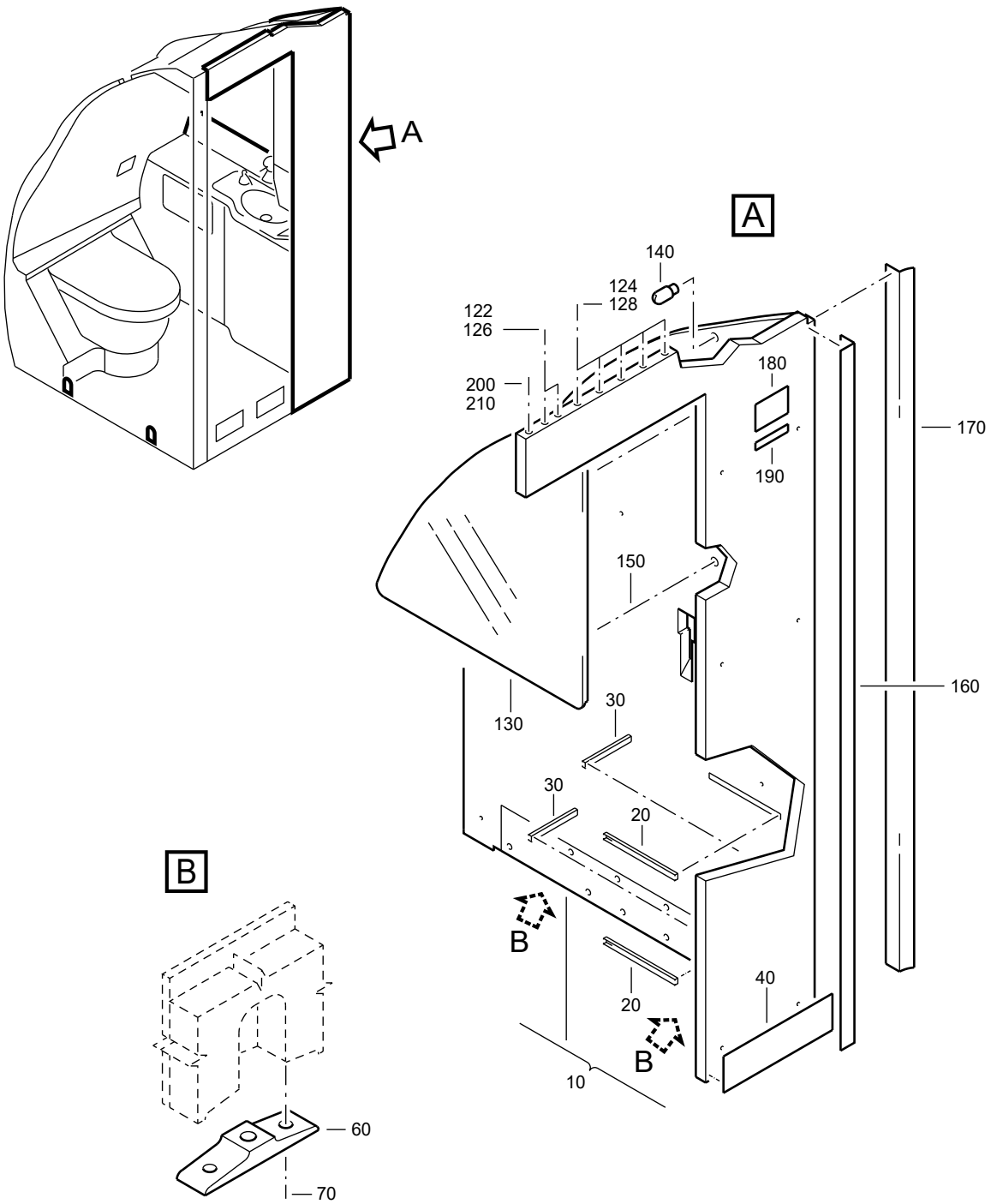

F_PL_254151_07_L_01_00

HOUSING
Figure 07L/EN254151SHEET07L01

FIG. ITEM	PART NUMBER	AIRLINE STOCK NUMBER	NOMENCLATURE 1234567		EFF CODE	UNITS PER ASSY
07L						
-001A	D2549020512466		. HOUSING used on 050G (25415141N) SEE 25-41-51-41N FOR NHA	NP		RF
-001B	D2549020801666		. HOUSING used on 050H (25415141N), 050B (25415141S), 050D (25415141T) SEE 25-41-51-41N FOR NHA SEE 25-41-51-41S FOR NHA SEE 25-41-51-41T FOR NHA	NP		RF
-001C	D2549020511266		. HOUSING used on 050J (25415141N) SEE 25-41-51-41N FOR NHA	NP		RF
-001D	D2549020514866		. HOUSING used on 050A (25415141P) SEE 25-41-51-41P FOR NHA	NP		RF
-001E	D2549020511866		. HOUSING used on 050B (25415141P), 050K (25415141R), 050D(25415141U) SEE 25-41-51-41P FOR NHA SEE 25-41-51-41R FOR NHA SEE 25-41-51-41U FOR NHA	NP		RF
-001F	D2549010610266		. HOUSING used on 050K (25415141N) SEE 25-41-51-41N FOR NHA	NP		RF
-001G	D2549030614666		. HOUSING used on 050E (25415141P) SEE 25-41-51-41P FOR NHA	NP		RF
-001H	D2549020800866		. HOUSING used on 050F (25415141P) SEE 25-41-51-41P FOR NHA	NP		RF

- ITEM NOT ILLUSTRATED

FIG. ITEM	PART NUMBER	AIRLINE STOCK NUMBER	NOMENCLATURE 1234567		EFF CODE	UNITS PER ASSY
-001J	D2549020510466		. HOUSING used on 050G (25415141P) SEE 25-41-51-41P FOR NHA	NP		RF
-001K	D2549020513666		. HOUSING used on 050A (25415141R) SEE 25-41-51-41R FOR NHA	NP		RF
-001L	D2549030613866		. HOUSING used on 050B (25415141R) SEE 25-41-51-41R FOR NHA	NP		RF
-001M	D2549010607666		. HOUSING used on 050F (25415141R), 050D (25415141S) SEE 25-41-51-41R FOR NHA SEE 25-41-51-41S FOR NHA	NP		RF
-001N	D2549020802066		. HOUSING used on 050K (25415141L) SEE 25-41-51-41L FOR NHA	NP		RF
010A	A225401303-658		. . HOUSING ASSY used on 001A			001
-010B	A225401303-510		. . HOUSING ASSY used on 001B			001
-010C	A225401303-754		. . HOUSING ASSY used on 001C			001
-010D	A225401303-600		. . HOUSING ASSY used on 001D			001
-010E	A225401303-660		. . HOUSING ASSY used on 001E			001
-010F	A225401303-670		. . HOUSING ASSY used on 001F			001

- ITEM NOT ILLUSTRATED

FIG. ITEM	PART NUMBER	AIRLINE STOCK NUMBER	NOMENCLATURE 1234567	EFF CODE	UNITS PER ASSY
-010G	A225401303-606		. . HOUSING ASSY used on 001G		001
-010H	A225401303-602		. . HOUSING ASSY used on 001H		001
-010J	A225401303-758		. . HOUSING ASSY used on 001J		001
-010K	A225401303-762		. . HOUSING ASSY used on 001K		001
-010L	A225401303-756		. . HOUSING ASSY used on 001L		001
-010M	A225401303-662		. . HOUSING ASSY used on 001M		001
-010N	A2254013038660		. . HOUSING ASSY POST SB 25-1314 used on 001N		001
020A	0-112-0016-2000		. . . STRIP-SLIDING USE AS REQUIRED used on 010A, 010B, 010C, 010D, 010E, 010F, 010G, 010H, 010J, 010K, 010L, 010M, 010N		AR
030A	0-112-0015-2000		. . . STRIP-SLIDING USE AS REQUIRED used on 010A, 010B, 010C, 010D, 010E, 010F, 010G, 010H, 010J, 010K, 010L, 010M, 010N		AR
040A	A225400211-210		. . . PLATE-SCUFF used on 010A, 010B, 010C, 010D, 010E, 010F, 010G, 010H, 010J, 010K, 010L, 010M, 010N		001

- ITEM NOT ILLUSTRATED

FIG. ITEM	PART NUMBER	AIRLINE STOCK NUMBER	NOMENCLATURE 1234567	EFF CODE	UNITS PER ASSY
-050A	NSA935405-01		. . . MOUNT USE AS REQUIRED used on 010A, 010B, 010C, 010D, 010E, 010F, 010G, 010H, 010J, 010K, 010L, 010M, 010N		AR
060A	A225400232-208		. . . FITTING used on 010A, 010B, 010C, 010D, 010E, 010F, 010G, 010H, 010J, 010K, 010L, 010M, 010N		002
070A	ABS0704-6-50		. . . SCREW used on 010A, 010B, 010C, 010D, 010E, 010F, 010G, 010H, 010J, 010K, 010L, 010M, 010N		004
-080A	NAS1833C08-370		. . . INSERT used on 010A, 010B, 010C, 010D, 010E, 010F, 010G, 010H, 010J, 010K, 010L, 010M, 010N		082
-090A	NAS1835C08		. . . INSERT USE AS REQUIRED used on 010A, 010B, 010C, 010D, 010E, 010F, 010G, 010H, 010J, 010K, 010L, 010M, 010N		AR
-100A	NSA5345-06C		. . . INSERT used on 010A, 010B, 010C, 010D, 010E, 010F, 010G, 010H, 010J, 010K, 010L, 010M, 010N		004
-110A	NSA5345-08C		. . . INSERT used on 010A, 010B, 010C, 010D, 010E, 010F, 010G, 010H, 010J, 010K, 010L, 010M, 010N		004

- ITEM NOT ILLUSTRATED

FIG. ITEM	PART NUMBER	AIRLINE STOCK NUMBER	NOMENCLATURE 1234567	EFF CODE	UNITS PER ASSY
-120A	EF1842-06C2		. . . INSERT used on 010A, 010B, 010C, 010D, 010E, 010F, 010G, 010H, 010J, 010K, 010L, 010M, 010N		004
122A	NAS1096-2-8		. . . SCREW BUY PN NAS1801-08-8 used on 010A, 010B, 010C, 010D, 010E, 010F, 010G, 010H, 010J, 010K, 010L, 010M, 010N		002
124A	NAS1096-3-8		. . . SCREW BUY PN NAS1801-3-8 used on 010A, 010B, 010C, 010D, 010E, 010F, 010G, 010H, 010J, 010K, 010L, 010M, 010N		005
126A	NAS1149CN832R		. . . WASHER used on 010A, 010B, 010C, 010D, 010E, 010F, 010G, 010H, 010J, 010K, 010L, 010M, 010N		002
128A	NAS1149C0332R		. . . WASHER used on 010A, 010B, 010C, 010D, 010E, 010F, 010G, 010H, 010J, 010K, 010L, 010M, 010N		005
130A	A2-254-0006-01		. . MIRROR-GLASS used on 001A, 001B, 001C, 001D, 001E, 001F, 001G, 001H, 001J, 001K, 001L, 001M, 001N		001
140A	A225400451-200		. . STUD used on 001A, 001B, 001C, 001D, 001E, 001F, 001G, 001H, 001J, 001K, 001L, 001M, 001N		001

- ITEM NOT ILLUSTRATED

FIG. ITEM	PART NUMBER	AIRLINE STOCK NUMBER	NOMENCLATURE 1234567	EFF CODE	UNITS PER ASSY
150A	NAS1100-08-4		. . SCREW used on 001A, 001B, 001C, 001D, 001E, 001F, 001G, 001H, 001J, 001K, 001L, 001M, 001N		003
160A	A225400224-212		. . SECTION used on 001A, 001B, 001C, 001D, 001E, 001F, 001G, 001H, 001J, 001K, 001L, 001M, 001N		001
170A	ABS0307A2-11		. . SECTION-SEALING USE AS REQUIRED BUY PN ABS0307AB2-11 used on 001A, 001B, 001C, 001D, 001E, 001F, 001G, 001H, 001J, 001K, 001L, 001M, 001N		AR
180A	A225400500-200		. . PLACARD used on 001A, 001B, 001C, 001D, 001E, 001F, 001G, 001H, 001J, 001K, 001L, 001M, 001N		001
190A	A225400500-202		. . PLACARD used on 001A, 001B, 001C, 001D, 001E, 001F, 001G, 001H, 001J, 001K, 001L, 001M, 001N		001
200A	NAS1096-3-10		. . SCREW BUY PN NAS1801-3-10 used on 001A, 001B, 001C, 001D, 001E, 001F, 001G, 001H, 001J, 001K, 001L, 001M, 001N		001
210A	NAS1149C0332R		. . WASHER used on 001A, 001B, 001C, 001D, 001E, 001F, 001G, 001H, 001J, 001K, 001L, 001M, 001N		001

- ITEM NOT ILLUSTRATED

THIS PAGE IS INTENTIONALLY LEFT BLANK

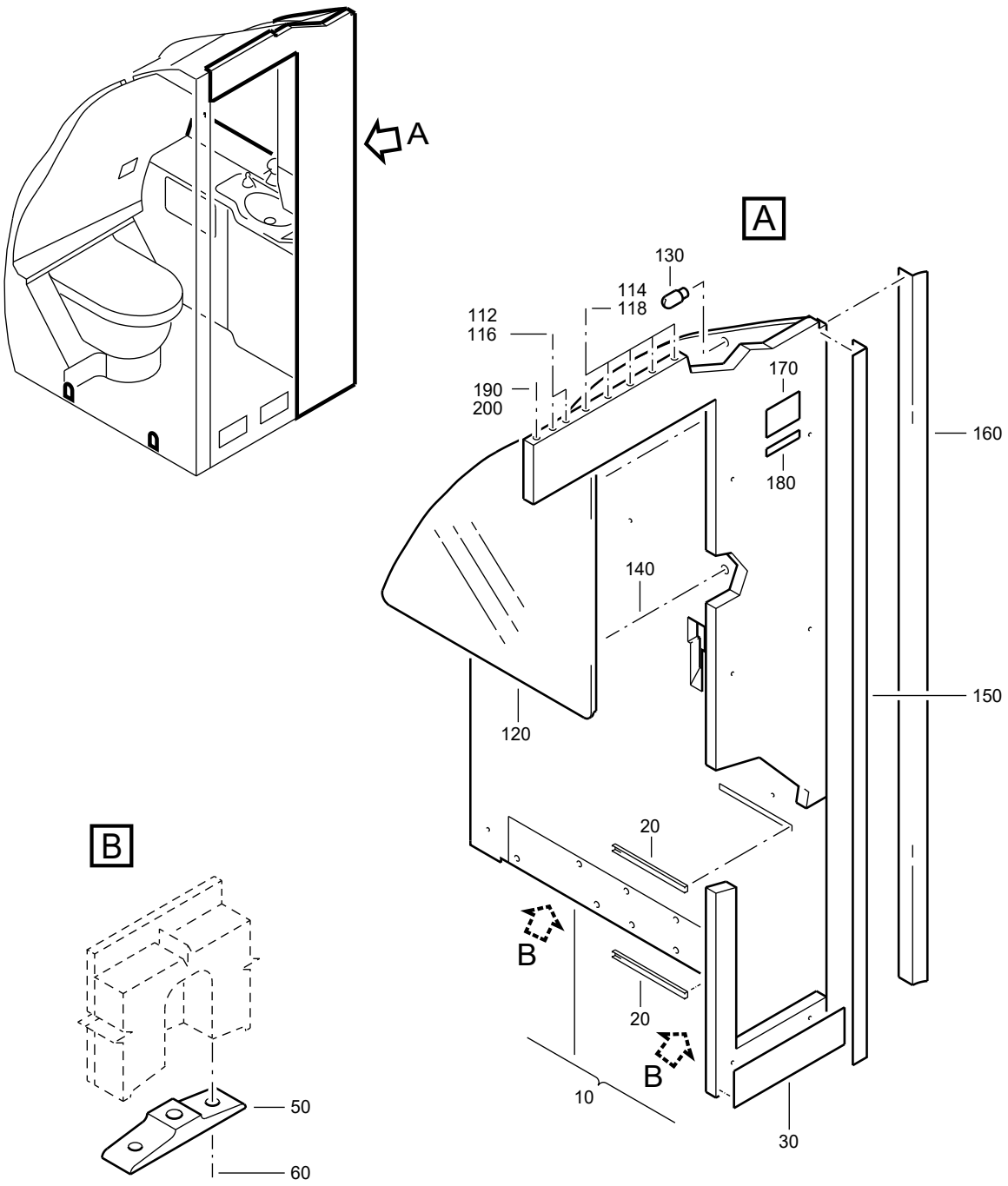

F_PL_254151_07_M_01_00

HOUSING
Figure 07M/EN254151SHEET07M01

FIG. ITEM	PART NUMBER	AIRLINE STOCK NUMBER	NOMENCLATURE 1234567	EFF CODE	UNITS PER ASSY
07M					
-001A	D2549020802866		. HOUSING NP used on 050A (25415141Q) SEE 25-41-51-41Q FOR NHA		RF
010A	A225401303-760		. . HOUSING ASSY used on 001A		001
020A	0-112-0016-2000		. . . STRIP-SLIDING USE AS REQUIRED used on 010A		AR
030A	A225400211-210		. . . PLATE-SCUFF used on 010A		001
-040A	NSA935405-01		. . . MOUNT used on 010A		035
050A	A225400232-208		. . . FITTING used on 010A		002
060A	ABS0704-6-50		. . . SCREW used on 010A		004
-065A	NAS1833C3-370		. . . INSERT used on 010A		005
-070A	NAS1833C08-370		. . . INSERT used on 010A		074
-075A	NSA5054-08		. . . INSERT used on 010A		004
-080A	NAS1835C08		. . . INSERT used on 010A		024
-090A	NSA5345-06C		. . . INSERT used on 010A		010
-100A	NSA5345-08C		. . . INSERT used on 010A		004

- ITEM NOT ILLUSTRATED

FIG. ITEM	PART NUMBER	AIRLINE STOCK NUMBER	NOMENCLATURE 1234567	EFF CODE	UNITS PER ASSY
-110A	EF1842-06C2		. . . INSERT used on 010A		004
112A	NAS1096-2-8		. . . SCREW BUY PN NAS1801-08-8 used on 010A		002
114A	NAS1096-3-8		. . . SCREW BUY PN NAS1801-3-8 used on 010A		005
116A	NAS1149CN832R		. . . WASHER used on 010A		002
118A	NAS1149C0332R		. . . WASHER used on 010A		005
120A	A2-254-0006-01		. . MIRROR-GLASS used on 001A		001
130A	A225400451-200		. . STUD used on 001A		001
140A	NAS1100-08-4		. . SCREW used on 001A		003
150A	A225400224-222		. . SECTION used on 001A		001
160A	ABS0307A2-11		. . SECTION-SEALING USE AS REQUIRED BUY PN ABS0307AB2-11 used on 001A		AR
170A	A225400500-200		. . PLACARD used on 001A		001
180A	A225400500-202		. . PLACARD used on 001A		001

- ITEM NOT ILLUSTRATED

FIG. ITEM	PART NUMBER	AIRLINE STOCK NUMBER	NOMENCLATURE 1234567	EFF CODE	UNITS PER ASSY
190A	NAS1096-3-10		. . SCREW BUY PN NAS1801-3-10 used on 001A		001
200A	NAS1149C0332R		. . WASHER used on 001A		001

- ITEM NOT ILLUSTRATED

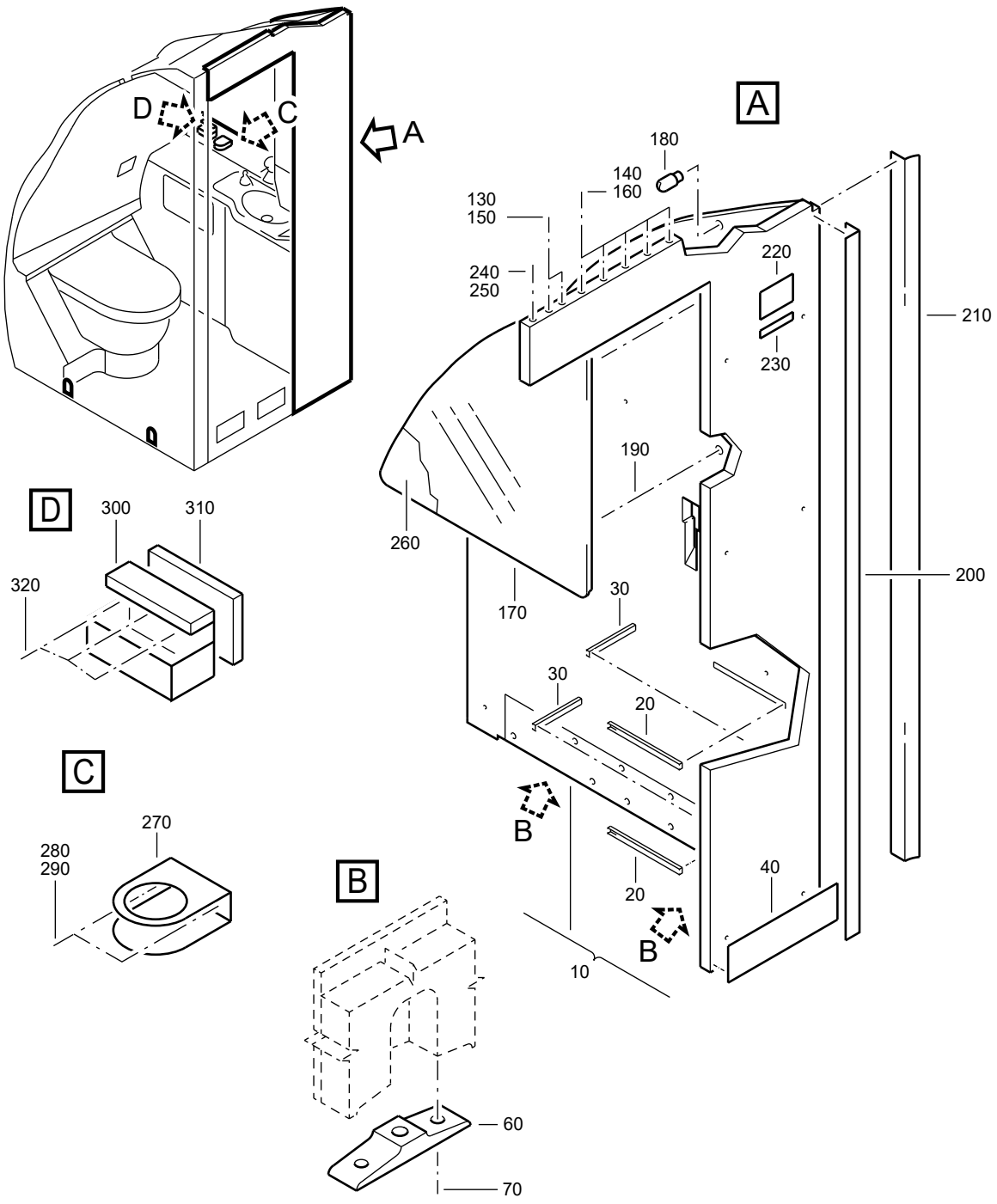

F_PL_254151_07_N_01_00

HOUSING
Figure 07N/EN254151SHEET07N01

FIG. ITEM	PART NUMBER	AIRLINE STOCK NUMBER	NOMENCLATURE 1234567		EFF CODE	UNITS PER ASSY
07N						
-001A	D2549020800666		. HOUSING PRE VSB A2-254-25-130 used on 050C (25415141R) SEE 25-41-51-41R FOR NHA	NP		RF
-001B	D2549030610066		. HOUSING used on 050D (25415141R) SEE 25-41-51-41R FOR NHA	NP		RF
-001C	D2549020510666		. HOUSING used on 050E (25415141R) SEE 25-41-51-41R FOR NHA	NP		RF
-001D	D2549030610466		. HOUSING used on 050H (25415141R) SEE 25-41-51-41R FOR NHA	NP		RF
-001E	D2549020803866		. HOUSING used on 050H (25415141P) SEE 25-41-51-41P FOR NHA	NP		RF
-001F	D2549020800466		. HOUSING used on 050J (25415141S), 050A (25415141T) SEE 25-41-51-41S FOR NHA SEE 25-41-51-41T FOR NHA	NP		RF
-001G	D2549030403866		. HOUSING used on 050B (25415141T) SEE 25-41-51-41T FOR NHA	NP		RF
-001H	D2549030612066		. HOUSING used on 050B (25415141U) SEE 25-41-51-41U FOR NHA	NP		RF
-001J	D2549030614866		. HOUSING used on 050F (25415141S) SEE 25-41-51-41S FOR NHA	NP		RF

- ITEM NOT ILLUSTRATED

FIG. ITEM	PART NUMBER	AIRLINE STOCK NUMBER	NOMENCLATURE 1234567		EFF CODE	UNITS PER ASSY
-001K	D2549020803466		. HOUSING used on 050G (25415141S) SEE 25-41-51-41S FOR NHA	NP		RF
-001L	D2549020803266		. HOUSING used on 050H (25415141S) SEE 25-41-51-41S FOR NHA	NP		RF
-001M	D2549030612166		. HOUSING POST SB 25-1314 used on 050F (25415141U) SEE 25-41-51-41U FOR NHA	NP		RF
-001N	R22540119605266		. HOUSING POST VSB A2-254-25-130 used on 050M (25415141R) SEE 25-41-51-41R FOR NHA	NP		RF
010A	A225401303-764		. . HOUSING ASSY PRE VSB A2-254-25-130 used on 001A			001
-010B	A225401303-604		. . HOUSING ASSY used on 001B			001
-010C	A225401303-754		. . HOUSING ASSY used on 001C			001
-010D	A225401303-500		. . HOUSING ASSY used on 001D			001
-010E	A225401303-766		. . HOUSING ASSY used on 001E			001
-010F	A225401303-514		. . HOUSING ASSY used on 001F			001
-010G	A225401303-780		. . HOUSING ASSY used on 001G			001

- ITEM NOT ILLUSTRATED

FIG. ITEM	PART NUMBER	AIRLINE STOCK NUMBER	NOMENCLATURE 1234567	EFF CODE	UNITS PER ASSY
-010H	A225401303-664		. . HOUSING ASSY used on 001H		001
-010J	A225401303-666		. . HOUSING ASSY used on 001J		001
-010K	A225401303-772		. . HOUSING ASSY used on 001K		001
-010L	A225401303-668		. . HOUSING ASSY used on 001L		001
-010M	A2254013038664		. . HOUSING ASSY used on 001M		001
-010N	A225401303-788		. . HOUSING ASSY POST VSB A2-254-25-130 used on 001N		001
020A	0-112-0016-2000		. . . STRIP-SLIDING USE AS REQUIRED used on 010A, 010B, 010C, 010D, 010E, 010F, 010G, 010H, 010J, 010K, 010L, 010M, 010N		AR
030A	0-112-0015-2000		. . . STRIP-SLIDING USE AS REQUIRED used on 010A, 010B, 010C, 010D, 010E, 010F, 010G, 010H, 010J, 010K, 010L, 010M, 010N		AR
040A	A225400211-210		. . . PLATE-SCUFF used on 010A, 010B, 010C, 010D, 010E, 010F, 010G, 010H, 010J, 010K, 010L, 010M, 010N		001
-050A	NSA935405-01		. . . MOUNT used on 010A, 010B, 010C, 010D, 010E, 010F, 010G, 010H, 010J, 010K, 010L, 010M, 010N		035

- ITEM NOT ILLUSTRATED

FIG. ITEM	PART NUMBER	AIRLINE STOCK NUMBER	NOMENCLATURE 1234567	EFF CODE	UNITS PER ASSY
060A	A225400232-208		. . . FITTING used on 010A, 010B, 010C, 010D, 010E, 010F, 010G, 010H, 010J, 010K, 010L, 010M, 010N		002
070A	ABS0704-6-50		. . . SCREW used on 010A, 010B, 010C, 010D, 010E, 010F, 010G, 010H, 010J, 010K, 010L, 010M, 010N		004
-080A	NAS1833C08-370		. . . INSERT USAGE RANGE FROM 078 TO 090 used on 010A, 010B, 010C, 010D, 010E, 010F, 010G, 010H, 010J, 010K, 010L, 010M, 010N		084
-090A	NAS1835C08		. . . INSERT USAGE RANGE FROM 018 TO 024 used on 010A, 010B, 010C, 010D, 010E, 010F, 010G, 010H, 010J, 010K, 010L, 010M, 010N		021
-100A	NSA5345-06C		. . . INSERT used on 010A, 010B, 010D, 010E, 010J, 010M, 010N		004
-110A	NSA5345-08C		. . . INSERT used on 010A, 010B, 010C, 010D, 010E, 010F, 010G, 010H, 010J, 010K, 010L, 010M, 010N		004
-120A	EF1842-06C2		. . . INSERT used on 010A, 010B, 010C, 010D, 010E, 010F, 010G, 010H, 010J, 010K, 010L, 010M, 010N		004
-125A	NAS1833C3-370		. . . INSERT used on 010J		005

- ITEM NOT ILLUSTRATED

FIG. ITEM	PART NUMBER	AIRLINE STOCK NUMBER	NOMENCLATURE 1234567	EFF CODE	UNITS PER ASSY
130A	NAS1096-2-8		. . . SCREW BUY PN NAS1801-08-8 used on 010A, 010B, 010C, 010D, 010E, 010F, 010G, 010H, 010J, 010K, 010L, 010M, 010N		002
140A	NAS1096-3-8		. . . SCREW BUY PN NAS1801-3-8 used on 010A, 010B, 010C, 010D, 010E, 010F, 010G, 010H, 010J, 010K, 010L, 010M, 010N		005
150A	NAS1149CN832R		. . . WASHER used on 010A, 010B, 010C, 010D, 010E, 010F, 010G, 010H, 010J, 010K, 010L, 010M, 010N		002
160A	NAS1149C0332R		. . . WASHER used on 010A, 010B, 010C, 010D, 010E, 010F, 010G, 010H, 010J, 010K, 010L, 010M, 010N		005
170A	A2-254-0006-01		. . MIRROR-GLASS PRE VSB A2-254-25-130 used on 001A, 001B, 001C, 001D, 001E, 001F, 001G, 001H, 001J, 001K, 001L, 001M		001
-170B	A225400470-000		. . MIRROR-GLASS POST VSB A2-254-25-130 used on 001N		001
180A	A225400451-200		. . STUD used on 001A, 001B, 001C, 001D, 001E, 001F, 001G, 001H, 001J, 001K, 001L, 001M, 001N		001

- ITEM NOT ILLUSTRATED

FIG. ITEM	PART NUMBER	AIRLINE STOCK NUMBER	NOMENCLATURE 1234567	EFF CODE	UNITS PER ASSY
190A	NAS1100-08-4		. . SCREW used on 001A, 001B, 001C, 001D, 001E, 001F, 001G, 001H, 001J, 001K, 001L, 001M, 001N		003
200A	A225400224-212		. . SECTION used on 001A, 001B, 001C, 001D, 001E, 001F, 001G, 001H, 001J, 001K, 001L, 001M, 001N		001
210A	ABS0307A2-11		. . SECTION-SEALING USE AS REQUIRED BUY PN ABS0307AB2-11 used on 001A, 001B, 001C, 001D, 001E, 001F, 001G, 001H, 001J, 001K, 001L, 001M, 001N		AR
220A	A225400500-200		. . PLACARD used on 001A, 001B, 001C, 001D, 001E, 001F, 001G, 001H, 001J, 001K, 001L, 001M, 001N		001
230A	A225400500-202		. . PLACARD used on 001A, 001B, 001C, 001D, 001E, 001F, 001G, 001H, 001J, 001K, 001L, 001M, 001N		001
240A	NAS1096-3-10		. . SCREW BUY PN NAS1801-3-10 used on 001A, 001B, 001C, 001D, 001E, 001F, 001G, 001H, 001J, 001K, 001L, 001M, 001N		001
250A	NAS1149C0332R		. . WASHER used on 001A, 001B, 001C, 001D, 001E, 001F, 001G, 001H, 001J, 001K, 001L, 001M, 001N		001
260A	120801		. . FOIL-SHADING,MIRROR used on 001C		001

- ITEM NOT ILLUSTRATED

FIG. ITEM	PART NUMBER	AIRLINE STOCK NUMBER	NOMENCLATURE 1234567	EFF CODE	UNITS PER ASSY
270A	4C255061-1		. . HOLDER-SOAP DISPENSER 1E-431 used on 001D		001
280A	NAS1100-04-7		. . SCREW used on 001D		002
290A	NAS1149CN432R		. . WASHER used on 001D		002
300A	B0040418-21		. . HOLDER-COSMETICS used on 001D		001
310A	A325400472-204		. . SPACER used on 001D		001
320A	NAS1304-2		. . BOLT BUY PN NAS6604-2 used on 001D		003

- ITEM NOT ILLUSTRATED

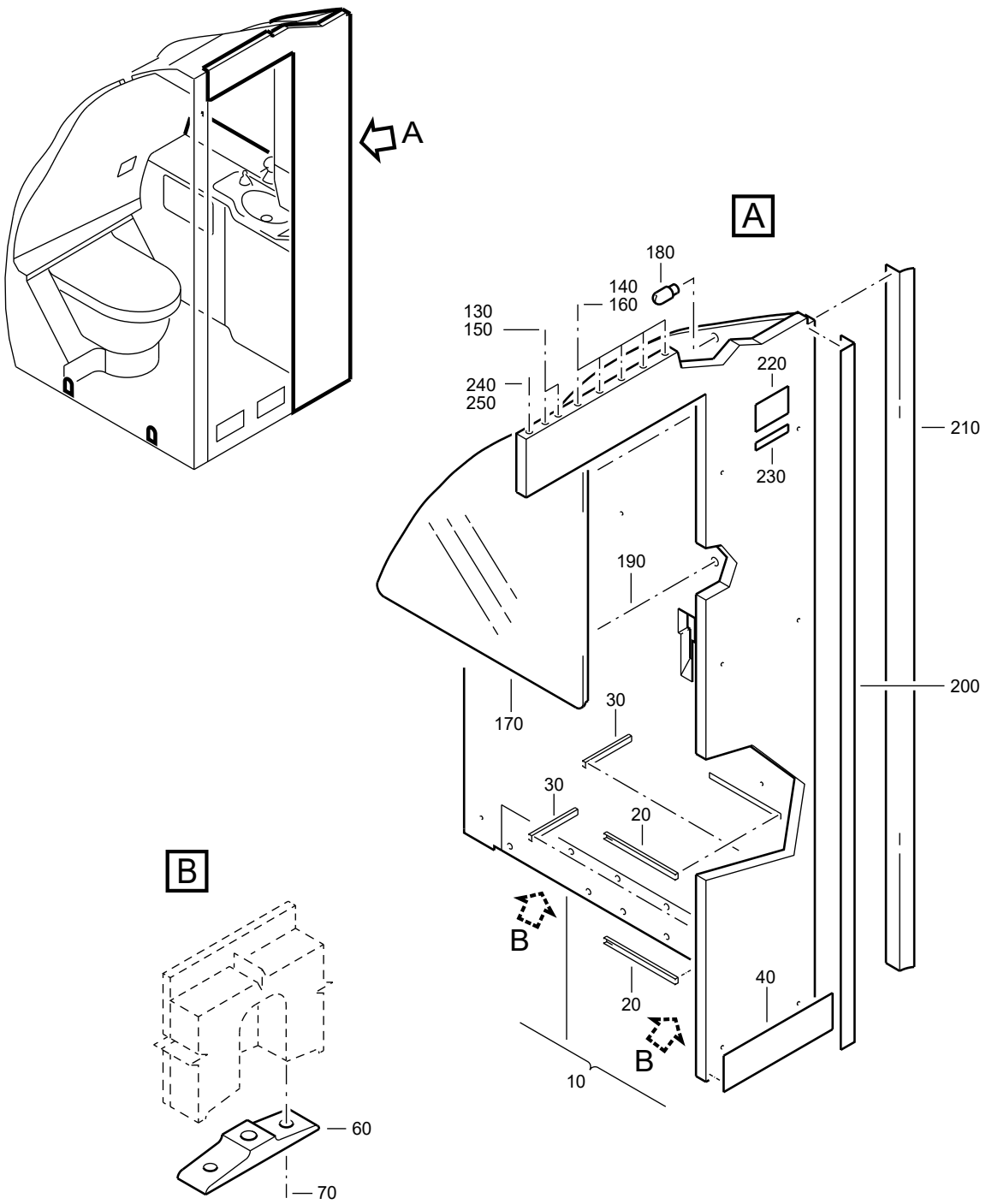

F_PL_254151_07_P_01_00

HOUSING
Figure 07P/EN254151SHEET07P01

FIG. ITEM	PART NUMBER	AIRLINE STOCK NUMBER	NOMENCLATURE 1234567	EFF CODE	UNITS PER ASSY
07P					
-001A	D2549020803666		. HOUSING NP used on 050K (25415141S) SEE 25-41-51-41S FOR NHA		RF
-001B	D2549030400066		. HOUSING NP used on 050L (25415141S), 050C (25415141U) SEE 25-41-51-41S FOR NHA SEE 25-41-51-41U FOR NHA		RF
-001C	D2549020801266		. HOUSING NP used on 050A (25415141U) SEE 25-41-51-41U FOR NHA		RF
-001D	D2549030400466		. HOUSING NP used on 050E (25415141U) SEE 25-41-51-41U FOR NHA		RF
010A	A225401303-774		. . HOUSING ASSY used on 001A		001
-010B	A225401303-768		. . HOUSING ASSY used on 001B		001
-010C	A225401303-516		. . HOUSING ASSY used on 001C		001
-010D	A225401303-770		. . HOUSING ASSY used on 001D		001
020A	0-112-0016-2000		. . . STRIP-SLIDING USE AS REQUIRED used on 010A, 010B, 010C, 010D		AR
030A	0-112-0015-2000		. . . STRIP-SLIDING USE AS REQUIRED used on 010A, 010B, 010C, 010D		AR
040A	A225400211-210		. . . PLATE-SCUFF used on 010A, 010B, 010C, 010D		001

- ITEM NOT ILLUSTRATED

FIG. ITEM	PART NUMBER	AIRLINE STOCK NUMBER	NOMENCLATURE 1234567	EFF CODE	UNITS PER ASSY
-050A	NSA935405-01		. . . MOUNT used on 010A, 010B, 010C, 010D		035
060A	A225400232-208		. . . FITTING used on 010A, 010B, 010C, 010D		002
070A	ABS0704-6-50		. . . SCREW used on 010A, 010B, 010C, 010D		004
-080A	NAS1833C08-370		. . . INSERT used on 010A, 010B, 010C, 010D		071
-090A	NAS1835C08		. . . INSERT used on 010A, 010B, 010C, 010D		028
-100A	NSA5345-06C		. . . INSERT used on 010A, 010B, 010C, 010D		004
-110A	NSA5345-08C		. . . INSERT used on 010A, 010B, 010C, 010D		004
-120A	EF1842-06C2		. . . INSERT used on 010A, 010B, 010C, 010D		004
130A	NAS1096-2-8		. . . SCREW BUY PN NAS1801-08-8 used on 010A, 010B, 010C, 010D		002
140A	NAS1096-3-8		. . . SCREW BUY PN NAS1801-3-8 used on 010A, 010B, 010C, 010D		005
150A	NAS1149CN832R		. . . WASHER used on 010A, 010B, 010C, 010D		002
160A	NAS1149C0332R		. . . WASHER used on 010A, 010B, 010C, 010D		005
170A	A2-254-0006-01		. . MIRROR-GLASS used on 001A, 001B, 001C, 001D		001

- ITEM NOT ILLUSTRATED

FIG. ITEM	PART NUMBER	AIRLINE STOCK NUMBER	NOMENCLATURE 1234567	EFF CODE	UNITS PER ASSY
180A	A225400451-200		. . STUD used on 001A, 001B, 001C, 001D		001
190A	NAS1100-08-4		. . SCREW used on 001A, 001B, 001C, 001D		003
200A	A225400224-212		. . SECTION used on 001A, 001B, 001C, 001D		001
210A	ABS0307A2-11		. . SECTION-SEALING USE AS REQUIRED BUY PN ABS0307AB2-11 used on 001A, 001B, 001C, 001D		AR
220A	A225400500-200		. . PLACARD used on 001A, 001B, 001C, 001D		001
230A	A225400500-202		. . PLACARD used on 001A, 001B, 001C, 001D		001
240A	NAS1096-3-10		. . SCREW BUY PN NAS1801-3-10 used on 001A, 001B, 001C, 001D		001
250A	NAS1149C0332R		. . WASHER used on 001A, 001B, 001C, 001D		001

- ITEM NOT ILLUSTRATED

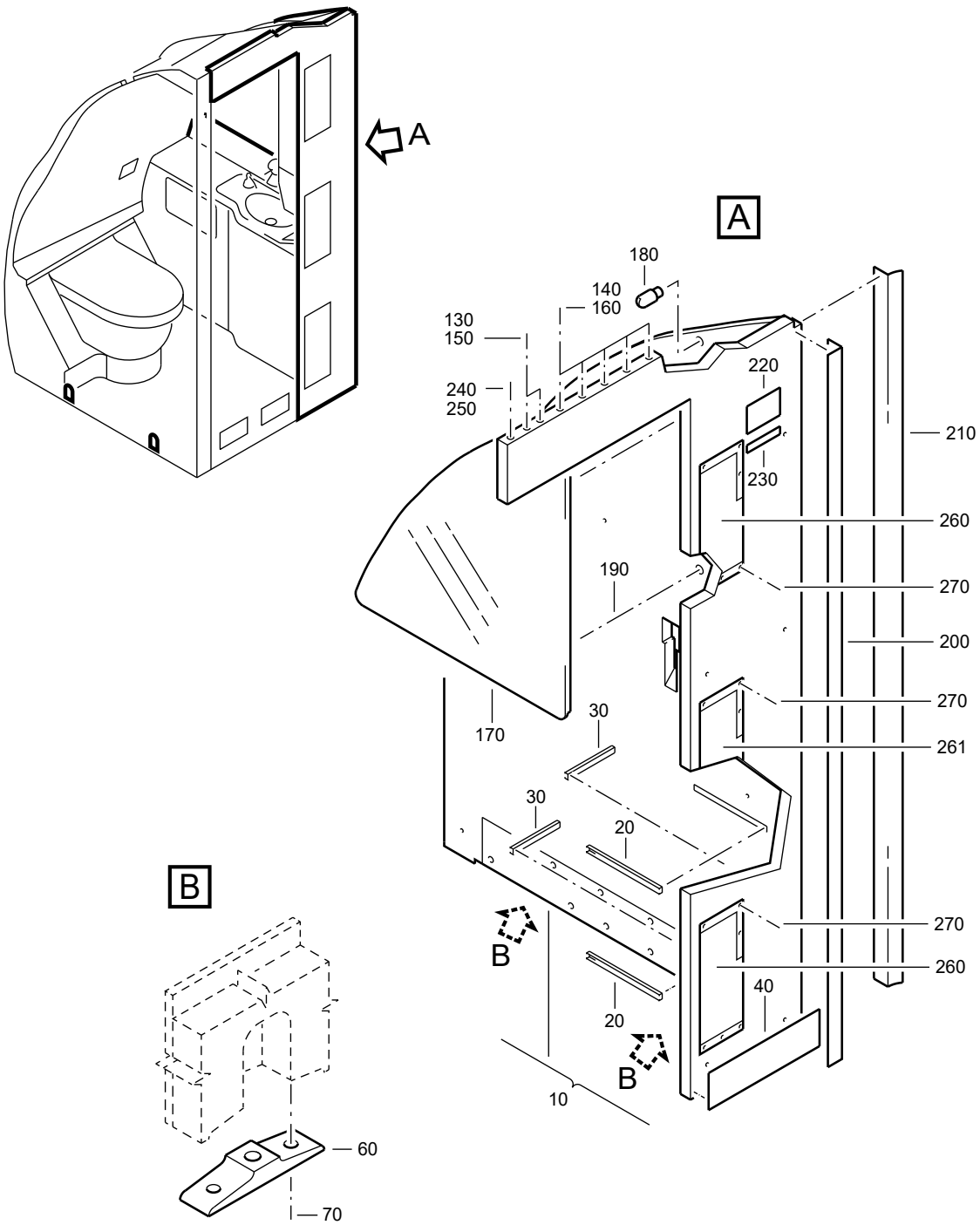

F_PL_254151_07_Q_01_00

HOUSING
Figure 07Q/EN254151SHEET07Q01

FIG. ITEM	PART NUMBER	AIRLINE STOCK NUMBER	NOMENCLATURE 1234567		EFF CODE	UNITS PER ASSY
07Q						
-001A	D2549030603266		. HOUSING used on 050A (25415141V) SEE 25-41-51-41V FOR NHA	NP		RF
-001B	D2549030402666		. HOUSING used on 050B (25415141V) SEE 25-41-51-41V FOR NHA	NP		RF
-001C	D2549030613666		. HOUSING used on 050A (25415141W) SEE 25-41-51-41W FOR NHA	NP		RF
-001D	D2549020802466		. HOUSING used on 050H (25415141V), 050D (25415141Y) SEE 25-41-51-41V FOR NHA SEE 25-41-51-41Y FOR NHA	NP		RF
-001E	D2549010611666		. HOUSING used on 050H (25415141W) SEE 25-41-51-41W FOR NHA	NP		RF
-001F	D2549030403466		. HOUSING used on 050D (25415141W) SEE 25-41-51-41W FOR NHA	NP		RF
-001G	D2549030402866		. HOUSING used on 050C (25415141V) SEE 25-41-51-41V FOR NHA	NP		RF
-001H	D2549010611266		. HOUSING used on 050F (25415141X) SEE 25-41-51-41X FOR NHA	NP		RF
-001J	D2549020809866		. HOUSING used on 050E (25415141V) SEE 25-41-51-41V FOR NHA	NP		RF

- ITEM NOT ILLUSTRATED

FIG. ITEM	PART NUMBER	AIRLINE STOCK NUMBER	NOMENCLATURE 1234567	EFF CODE	UNITS PER ASSY
-001K	D2549020808466		. HOUSING NP used on 050G (25415141W), 050G (25415141X) SEE 25-41-51-41W FOR NHA SEE 25-41-51-41X FOR NHA		RF
-001L	D2549030403666		. HOUSING NP used on 050F (25415141W) SEE 25-41-51-41W FOR NHA		RF
-001M	D2549020812066		. HOUSING NP used on 050A (25415142A), 050A (25415142C), 050E(25415142F) SEE 25-41-51-42A FOR NHA SEE 25-41-51-42C FOR NHA SEE 25-41-51-42F FOR NHA		RF
010A	A225401304-500		. . HOUSING ASSY used on 001A		001
-010B	A225401304-502		. . HOUSING ASSY used on 001B		001
-010C	A225401304-550		. . HOUSING ASSY used on 001C		001
-010D	A225401304-606		. . HOUSING ASSY used on 001D		001
-010E	A225401304-600		. . HOUSING ASSY used on 001E		001
-010F	A225401304-702		. . HOUSING ASSY used on 001F		001
-010G	A225401304-602		. . HOUSING ASSY used on 001G		001
-010H	A225401304-608		. . HOUSING ASSY used on 001H		001

- ITEM NOT ILLUSTRATED

FIG. ITEM	PART NUMBER	AIRLINE STOCK NUMBER	NOMENCLATURE 1234567	EFF CODE	UNITS PER ASSY
-010J	A225401304-650		. . HOUSING ASSY used on 001J		001
-010K	A2254013048806		. . HOUSING ASSY POST SB 25-1314 used on 001K		001
-010L	A225401304-700		. . HOUSING ASSY used on 001L		001
-010M	A225401304-770		. . HOUSING ASSY used on 001M		001
020A	0-112-0016-2000		. . . STRIP-SLIDING USE AS REQUIRED used on 010A, 010B, 010C, 010D, 010E, 010F, 010G, 010H, 010J, 010K, 010L, 010M		AR
030A	0-112-0015-2000		. . . STRIP-SLIDING USE AS REQUIRED used on 010A, 010B, 010C, 010D, 010E, 010F, 010G, 010H, 010J, 010K, 010L, 010M		AR
040A	A225400211-464		. . . PLATE-SCUFF used on 010A, 010B, 010C, 010D, 010E, 010F, 010G, 010J, 010K, 010L		001
-050A	NSA935405-01		. . . MOUNT used on 010A, 010B, 010C, 010D, 010E, 010F, 010G, 010H, 010J, 010K, 010L, 010M		035
060A	A225400232-208		. . . FITTING used on 010A, 010B, 010C, 010D, 010E, 010F, 010G, 010H, 010J, 010K, 010L, 010M		002

- ITEM NOT ILLUSTRATED

FIG. ITEM	PART NUMBER	AIRLINE STOCK NUMBER	NOMENCLATURE 1234567	EFF CODE	UNITS PER ASSY
070A	ABS0704-6-50		. . . SCREW used on 010A, 010B, 010C, 010D, 010E, 010F, 010G, 010H, 010J, 010K, 010L, 010M		004
-080A	NAS1833C08-370		. . . INSERT USE AS REQUIRED used on 010A, 010B, 010C, 010D, 010E, 010F, 010G, 010H, 010J, 010K, 010L, 010M		AR
-090A	NAS1835C08		. . . INSERT USE AS REQUIRED used on 010A, 010B, 010C, 010D, 010E, 010F, 010G, 010H, 010J, 010K, 010L, 010M		AR
-100A	NSA5345-06C		. . . INSERT used on 010A, 010B, 010C, 010D, 010E, 010F, 010G, 010H, 010J, 010K, 010L, 010M		004
-110A	NSA5345-08C		. . . INSERT used on 010A, 010B, 010C, 010D, 010E, 010F, 010G, 010H, 010J, 010K, 010L, 010M		003
-120A	EF1842-06C2		. . . INSERT used on 010A, 010B, 010C, 010D, 010E, 010F, 010G, 010H, 010J, 010K, 010L, 010M		004
130A	NAS1096-2-8		. . . SCREW BUY PN NAS1801-08-8 used on 010A, 010B, 010C, 010D, 010E, 010F, 010G, 010H, 010J, 010K, 010L, 010M		002

- ITEM NOT ILLUSTRATED

FIG. ITEM	PART NUMBER	AIRLINE STOCK NUMBER	NOMENCLATURE 1234567	EFF CODE	UNITS PER ASSY
140A	NAS1096-3-8		. . . SCREW BUY PN NAS1801-3-8 used on 010A, 010B, 010C, 010D, 010E, 010F, 010G, 010H, 010J, 010K, 010L, 010M		005
150A	NAS1149CN832R		. . . WASHER used on 010A, 010B, 010C, 010D, 010E, 010F, 010G, 010H, 010J, 010K, 010L, 010M		002
160A	NAS1149C0332R		. . . WASHER used on 010A, 010B, 010C, 010D, 010E, 010F, 010G, 010H, 010J, 010K, 010L, 010M		005
170A	A2-254-0006-01		. . MIRROR-GLASS used on 001A, 001B, 001C, 001D, 001E, 001F, 001G, 001H, 001J, 001K, 001L, 001M		001
180A	A225400451-200		. . STUD used on 001A, 001B, 001C, 001D, 001E, 001F, 001G, 001H, 001J, 001K, 001L, 001M		001
190A	NAS1100-08-4		. . SCREW used on 001A, 001B, 001C, 001D, 001E, 001F, 001G, 001H, 001J, 001K, 001L, 001M		003
200A	A225400224-212		. . SECTION used on 001A, 001B, 001C, 001D, 001E, 001F, 001G, 001H, 001J, 001K, 001L, 001M		001

- ITEM NOT ILLUSTRATED

FIG. ITEM	PART NUMBER	AIRLINE STOCK NUMBER	NOMENCLATURE 1234567	EFF CODE	UNITS PER ASSY
210A	ABS0307A2-11		. . SECTION-SEALING USE AS REQUIRED BUY PN ABS0307AB2-11 used on 001A, 001B, 001C, 001D, 001E, 001F, 001G, 001H, 001J, 001K, 001L, 001M		AR
220A	A225400500-200		. . PLACARD used on 001A, 001B, 001C, 001D, 001E, 001F, 001G, 001H, 001J, 001K, 001L, 001M		001
230A	A225400500-202		. . PLACARD used on 001A, 001B, 001C, 001D, 001E, 001F, 001G, 001H, 001J, 001K, 001L, 001M		001
240A	NAS1096-3-10		. . SCREW BUY PN NAS1801-3-10 used on 001A, 001B, 001C, 001D, 001E, 001F, 001G, 001H, 001J, 001K, 001L, 001M		001
250A	NAS1149C0332R		. . WASHER used on 001A, 001B, 001C, 001D, 001E, 001F, 001G, 001H, 001J, 001K, 001L, 001M		001
260A	D2528641100000		. . COVER-DECOR used on 001D, 001E, 001F		002
-260B	D2528641100600		. . COVER-DECOR used on 001A, 001B, 001C, 001G, 001H, 001J, 001K, 001L, 001M		002
261A	D2528641100000		. . COVER-DECOR used on 001D, 001E, 001F		001

- ITEM NOT ILLUSTRATED

FIG. ITEM	PART NUMBER	AIRLINE STOCK NUMBER	NOMENCLATURE 1234567	EFF CODE	UNITS PER ASSY
-261B	D2528641100600		. . COVER-DECOR used on 001A, 001B, 001C, 001G, 001J, 001L, 001M		001
-261C	D2528641102000		. . COVER-DECOR POST SB 25-1400 used on 001H, 001K		001
270A	NAS1102-04-6		. . SCREW used on 001A, 001B, 001C, 001D, 001E, 001F, 001G, 001H, 001J, 001K, 001L, 001M		018

- ITEM NOT ILLUSTRATED

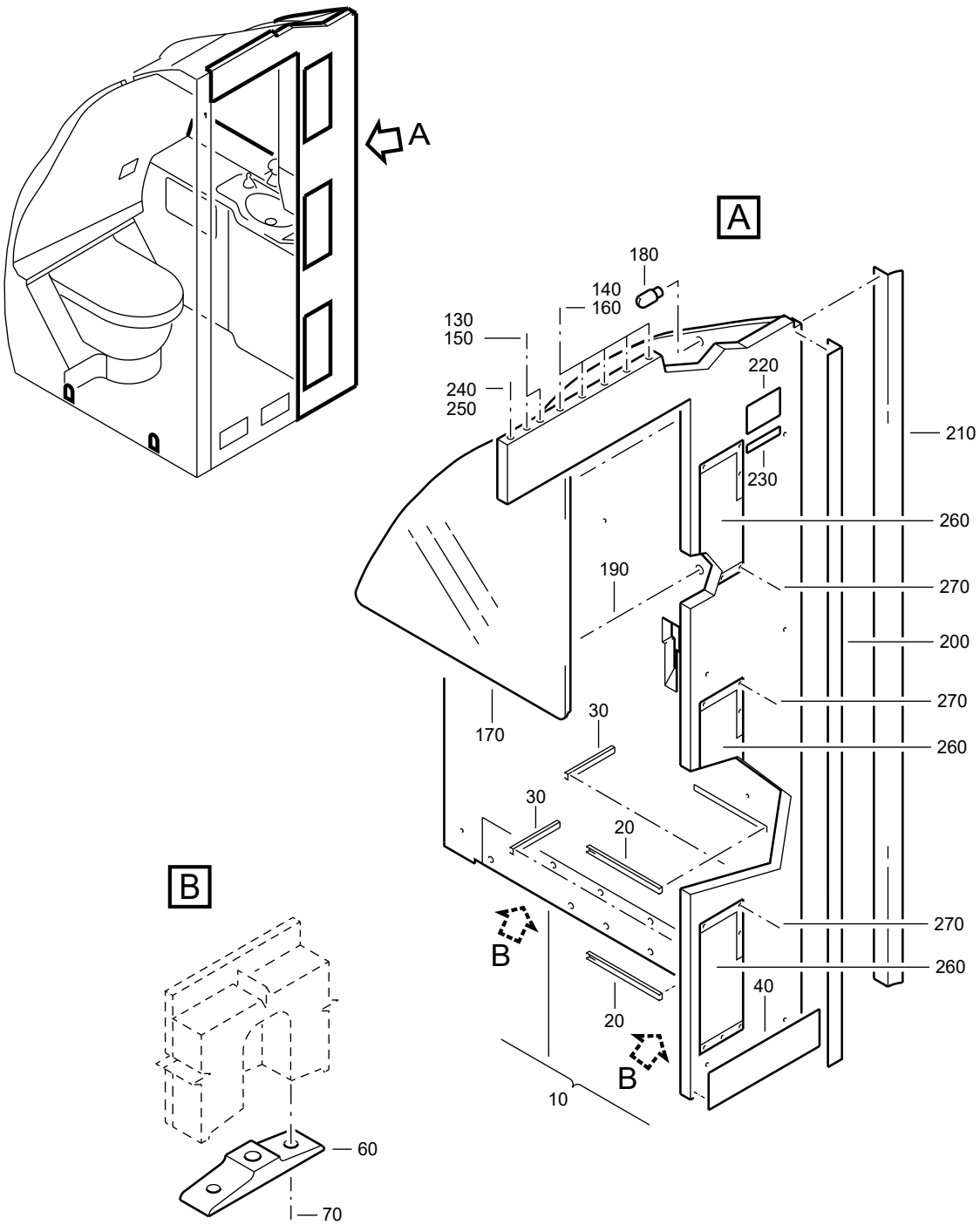

F_PL_254151_07_R_01_00

HOUSING
Figure 07R/EN254151SHEET07R01

FIG. ITEM	PART NUMBER	AIRLINE STOCK NUMBER	NOMENCLATURE 1234567	EFF CODE	UNITS PER ASSY
07R					
-001A	D2549020714066		. HOUSING NP used on 050G (25415141V), 050G (25415141Y) SEE 25-41-51-41V FOR NHA SEE 25-41-51-41Y FOR NHA		RF
-001B	D2549020801466		. HOUSING NP used on 050D (25415141V) SEE 25-41-51-41V FOR NHA		RF
-001C	D2549020809066		. HOUSING NP used on 050F (25415141V) SEE 25-41-51-41V FOR NHA		RF
-001D	D2549030403066		. HOUSING NP PRE VSB A2-254-25-130 used on 050E (25415141W) SEE 25-41-51-41W FOR NHA		RF
-001E	D2549010612066		. HOUSING NP used on 050C (25415141W) SEE 25-41-51-41W FOR NHA		RF
-001F	D2549020809466		. HOUSING NP used on 050B (25415141W) SEE 25-41-51-41W FOR NHA		RF
-001G	D2549030401466		. HOUSING NP used on 050J (25415141V), 050J (25415141Y) SEE 25-41-51-41V FOR NHA SEE 25-41-51-41Y FOR NHA		RF
-001H	D2549030402266		. HOUSING NP used on 050B (25415141X), 050B (254151420) SEE 25-41-51-41X FOR NHA SEE 25-41-51-420 FOR NHA		RF

- ITEM NOT ILLUSTRATED

FIG. ITEM	PART NUMBER	AIRLINE STOCK NUMBER	NOMENCLATURE 1234567	EFF CODE	UNITS PER ASSY
-001J	D2549030608466		. HOUSING NP used on 050J (25415141H), 050A (25415141J) SEE 25-41-51-41H FOR NHA SEE 25-41-51-41J FOR NHA		RF
-001K	D2549020808866		. HOUSING NP used on 050K (25415141V), 050C (25415141X), 050C (25415142A) SEE 25-41-51-41V FOR NHA SEE 25-41-51-41X FOR NHA SEE 25-41-51-42A FOR NHA		RF
-001L	D2549030405266		. HOUSING NP used on 050D (25415141X) SEE 25-41-51-41X FOR NHA		RF
-001M	D2549030402466		. HOUSING NP used on 050E (25415141X) SEE 25-41-51-41X FOR NHA		RF
-001N	D2549030401566		. HOUSING NP POST SB 25-1314 used on 050M (25415141V), 050K (25415141Y) SEE 25-41-51-41V FOR NHA SEE 25-41-51-41Y FOR NHA		RF
-001P	D2549030606166		. HOUSING NP POST SB 25-1314 used on 050L (25415141J) SEE 25-41-51-41J FOR NHA		RF
-001Q	R22540119605466		. HOUSING NP POST VSB A2-254-25-130 used on 050K (25415141W) SEE 25-41-51-41W FOR NHA		RF
010A	A225401304-708		. . HOUSING ASSY used on 001A		001

- ITEM NOT ILLUSTRATED

FIG. ITEM	PART NUMBER	AIRLINE STOCK NUMBER	NOMENCLATURE 1234567	EFF CODE	UNITS PER ASSY
-010B	A225401304-510		. . HOUSING ASSY used on 001B		001
-010C	A225401304-512		. . HOUSING ASSY used on 001C		001
-010D	A225401304-704		. . HOUSING ASSY PRE VSB A2-254-25-130 used on 001D		001
-010E	A2254013048506		. . HOUSING ASSY POST SB 25-1314 used on 001E		001
-010F	A225401304-508		. . HOUSING ASSY used on 001F		001
-010G	A225401304-710		. . HOUSING ASSY POST SB 25-1287 used on 001G, 001J		001
-010H	A225401304-754		. . HOUSING ASSY used on 001H		001
-010J	A225401304-804		. . HOUSING ASSY used on 001M		001
-010K	A225401304-752		. . HOUSING ASSY used on 001K		001
-010L	A225401304-800		. . HOUSING ASSY used on 001L		001
-010M	A2254013048710		. . HOUSING ASSY POST SB 25-1314 used on 001N, 001P		001
-010N	A225401304-774		. . HOUSING ASSY POST VSB A2-254-25-130 used on 001Q		001

- ITEM NOT ILLUSTRATED

FIG. ITEM	PART NUMBER	AIRLINE STOCK NUMBER	NOMENCLATURE 1234567	EFF CODE	UNITS PER ASSY
020A	0-112-0016-2000		. . . STRIP-SLIDING USE AS REQUIRED used on 010A, 010B, 010C, 010D, 010E, 010F, 010G, 010H, 010J, 010K, 010L, 010M, 010N		AR
030A	0-112-0015-2000		. . . STRIP-SLIDING USE AS REQUIRED used on 010A, 010B, 010C, 010D, 010E, 010F, 010G, 010H, 010J, 010K, 010L, 010M, 010N		AR
040A	A225400211-464		. . . PLATE-SCUFF used on 010A, 010B, 010C, 010D, 010E, 010F, 010G, 010J, 010N		001
-050A	NSA935405-01		. . . MOUNT used on 010A, 010B, 010C, 010D, 010E, 010F, 010G, 010H, 010J, 010K, 010L, 010M, 010N		035
060A	A225400232-208		. . . FITTING used on 010A, 010B, 010C, 010D, 010E, 010F, 010G, 010H, 010J, 010K, 010L, 010M, 010N		002
070A	ABS0704-6-50		. . . SCREW used on 010A, 010B, 010C, 010D, 010E, 010F, 010G, 010H, 010J, 010K, 010L, 010M, 010N		004
-080A	NAS1833C08-370		. . . INSERT USAGE RANGE FROM 093 TO 096 used on 010A, 010B, 010C, 010D, 010E, 010F, 010G, 010H, 010J, 010K, 010L, 010M, 010N		095

- ITEM NOT ILLUSTRATED

FIG. ITEM	PART NUMBER	AIRLINE STOCK NUMBER	NOMENCLATURE 1234567	EFF CODE	UNITS PER ASSY
-090A	NAS1835C08		. . . INSERT USAGE RANGE FROM 015 TO 018 POST SB 25-1314 used on 010A, 010B, 010C, 010D, 010E, 010F, 010G, 010H, 010J, 010K, 010L, 010M, 010N		017
-100A	NSA5345-06C		. . . INSERT used on 010A, 010B, 010C, 010D, 010E, 010F, 010G, 010H, 010J, 010K, 010L, 010M, 010N		004
-110A	NSA5345-08C		. . . INSERT used on 010A, 010B, 010C, 010D, 010E, 010F, 010G, 010H, 010J, 010K, 010L, 010M, 010N		003
-120A	EF1842-06C2		. . . INSERT used on 010A, 010B, 010C, 010D, 010E, 010F, 010G, 010H, 010J, 010K, 010L, 010M, 010N		004
130A	NAS1096-2-8		. . . SCREW BUY PN NAS1801-08-8 used on 010A, 010B, 010C, 010D, 010E, 010F, 010G, 010H, 010J, 010K, 010L, 010M, 010N		002
140A	NAS1096-3-8		. . . SCREW BUY PN NAS1801-3-8 used on 010A, 010B, 010C, 010D, 010E, 010F, 010G, 010H, 010J, 010K, 010L, 010M, 010N		005
150A	NAS1149CN832R		. . . WASHER used on 010A, 010B, 010C, 010D, 010E, 010F, 010G, 010H, 010J, 010K, 010L, 010M, 010N		002

- ITEM NOT ILLUSTRATED

FIG. ITEM	PART NUMBER	AIRLINE STOCK NUMBER	NOMENCLATURE 1234567	EFF CODE	UNITS PER ASSY
160A	NAS1149C0332R		. . . WASHER used on 010A, 010B, 010C, 010D, 010E, 010F, 010G, 010H, 010J, 010K, 010L, 010M, 010N		005
170A	A2-254-0006-01		. . MIRROR-GLASS PRE VSB A2-254-25-130 used on 001A, 001B, 001C, 001D, 001E, 001F, 001G, 001H, 001J, 001K, 001L, 001M, 001N, 001P		001
-170B	A225400470-000		. . MIRROR-GLASS POST VSB A2-254-25-130 used on 001Q		001
180A	A225400451-200		. . STUD used on 001A, 001B, 001C, 001D, 001E, 001F, 001G, 001H, 001J, 001K, 001L, 001M, 001N, 001P, 001Q		001
190A	NAS1100-08-4		. . SCREW used on 001A, 001B, 001C, 001D, 001E, 001F, 001G, 001H, 001J, 001K, 001L, 001M, 001N, 001P, 001Q		003
200A	A225400224-212		. . SECTION used on 001A, 001B, 001C, 001D, 001E, 001F, 001G, 001H, 001J, 001K, 001L, 001M, 001N, 001P, 001Q		001

- ITEM NOT ILLUSTRATED

FIG. ITEM	PART NUMBER	AIRLINE STOCK NUMBER	NOMENCLATURE 1234567	EFF CODE	UNITS PER ASSY
210A	ABS0307A2-11		. . SECTION-SEALING USE AS REQUIRED BUY PN ABS0307AB2-11 used on 001A, 001B, 001C, 001D, 001E, 001F, 001G, 001H, 001J, 001K, 001L, 001M, 001N, 001P, 001Q		AR
220A	A225400500-200		. . PLACARD used on 001A, 001B, 001C, 001D, 001E, 001F, 001G, 001H, 001J, 001K, 001L, 001M, 001N, 001P, 001Q		001
230A	A225400500-202		. . PLACARD used on 001A, 001B, 001C, 001D, 001E, 001F, 001G, 001H, 001J, 001K, 001L, 001M, 001N, 001P, 001Q		001
240A	NAS1096-3-10		. . SCREW BUY PN NAS1801-3-10 used on 001A, 001B, 001C, 001D, 001E, 001F, 001G, 001H, 001J, 001K, 001L, 001M, 001N, 001P, 001Q		001
250A	NAS1149C0332R		. . WASHER used on 001A, 001B, 001C, 001D, 001E, 001F, 001G, 001H, 001J, 001K, 001L, 001M, 001N, 001P, 001Q		001
260A	D2528641100000		. . COVER-DECOR used on 001A, 001J, 001P		003
-260B	D2528641100600		. . COVER-DECOR used on 001B, 001C, 001D, 001E, 001F, 001G, 001H, 001K, 001L, 001M, 001N, 001Q		003

- ITEM NOT ILLUSTRATED

FIG. ITEM	PART NUMBER	AIRLINE STOCK NUMBER	NOMENCLATURE 1234567	EFF CODE	UNITS PER ASSY
270A	NAS1102-04-6		. . SCREW used on 001A, 001B, 001C, 001D, 001E, 001F, 001G, 001H, 001J, 001K, 001L, 001M, 001N, 001P, 001Q		018

- ITEM NOT ILLUSTRATED

THIS PAGE IS INTENTIONALLY LEFT BLANK

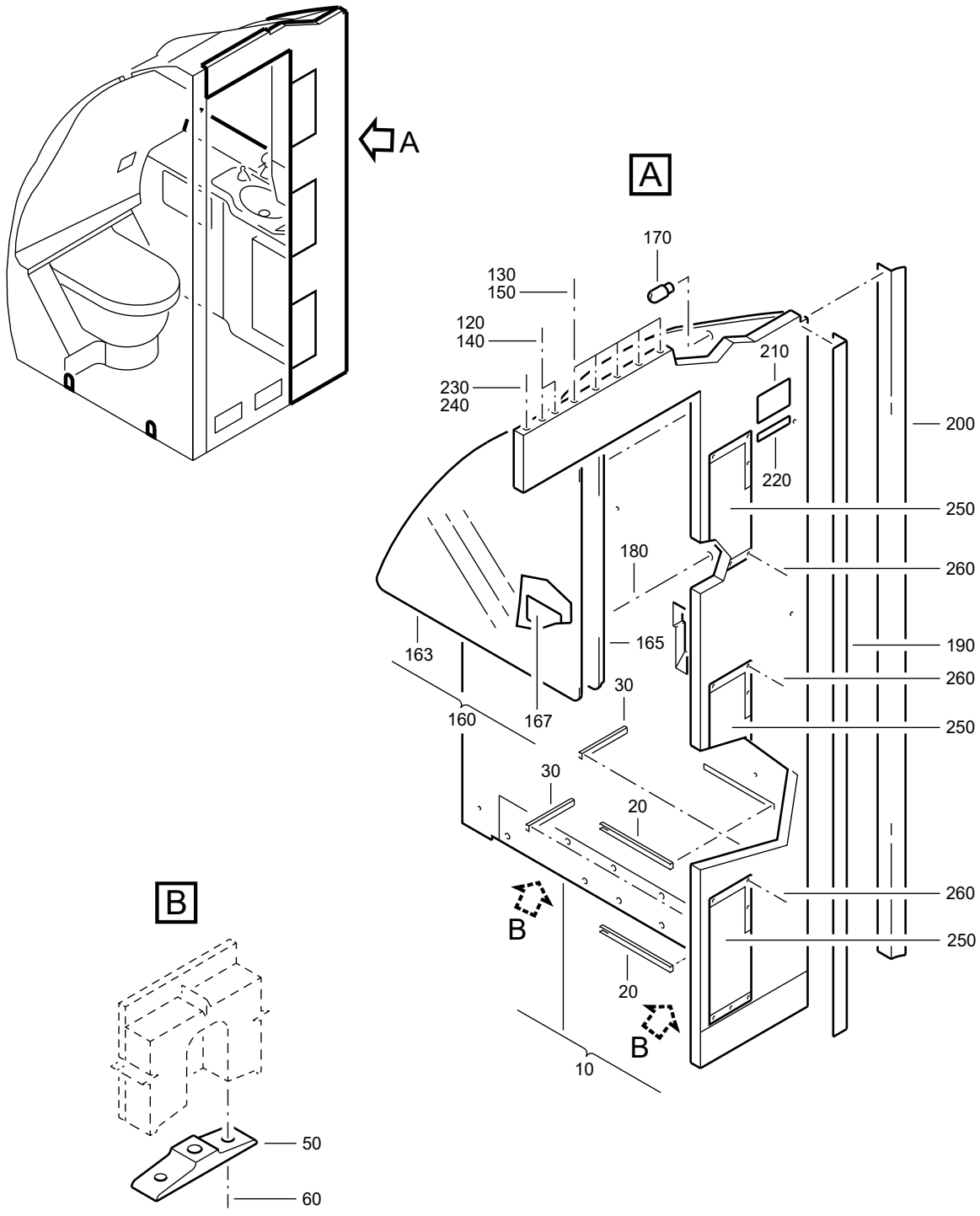

F_PL_254151_07_S_01_00

HOUSING
Figure 07S/EN254151SHEET07S01

FIG. ITEM	PART NUMBER	AIRLINE STOCK NUMBER	NOMENCLATURE 1234567	EFF CODE	UNITS PER ASSY
07S					
-001A	D2549020806066		. HOUSING NP PRE VSB A2-254-25-130 used on 050A (25415141X), 050E (25415141Z) SEE 25-41-51-41X FOR NHA SEE 25-41-51-41Z FOR NHA		RF
-001B	D2549020807666		. HOUSING NP used on 050A (25415141Y), 050A (25415141Z) SEE 25-41-51-41Y FOR NHA SEE 25-41-51-41Z FOR NHA		RF
-001C	D2549020805066		. HOUSING NP used on 050B (25415141Y), 050D (25415141Z) SEE 25-41-51-41Y FOR NHA SEE 25-41-51-41Z FOR NHA		RF
-001D	D2549020810066		. HOUSING NP used on 050E (25415141Y), 050F (25415141Y) SEE 25-41-51-41Y FOR NHA SEE 25-41-51-41Y FOR NHA		RF
-001E	D2549020811466		. HOUSING NP used on 050H (25415141X) SEE 25-41-51-41X FOR NHA		RF
-001F	D2549020804066		. HOUSING NP used on 050L (25415141V), 050C (25415141Y), 050B(25415141Z) SEE 25-41-51-41V FOR NHA SEE 25-41-51-41Y FOR NHA SEE 25-41-51-41Z FOR NHA		RF
-001G	D2549030404266		. HOUSING NP used on 050H (25415141Y) SEE 25-41-51-41Y FOR NHA		RF

- ITEM NOT ILLUSTRATED

FIG. ITEM	PART NUMBER	AIRLINE STOCK NUMBER	NOMENCLATURE 1234567		EFF CODE	UNITS PER ASSY
-001H	D2549020806866		. HOUSING used on 050C (25415141Z) SEE 25-41-51-41Z FOR NHA	NP		RF
-001J	D2549020811666		. HOUSING used on 050F (25415141Z) SEE 25-41-51-41Z FOR NHA	NP		RF
-001K	D2549010613266		. HOUSING used on 050G (25415141Z) SEE 25-41-51-41Z FOR NHA	NP		RF
-001L	D2549010613466		. HOUSING used on 050H (25415141Z) SEE 25-41-51-41Z FOR NHA	NP		RF
-001M	D2549020811866		. HOUSING PRE VSB A2-254-25-130 used on 050C (254151420) SEE 25-41-51-420 FOR NHA	NP		RF
-001N	D2547161903066		. HOUSING POST SB 25-1742 used on 050N (25415101G) SEE 25-41-51-01G FOR NHA	NP		RF
-001P	R22540119605666		. HOUSING POST VSB A2-254-25-130 used on 050J (25415141X), 050L (254151420) SEE 25-41-51-41X FOR NHA SEE 25-41-51-420 FOR NHA	NP		RF
010A	A225401304-802		. . HOUSING ASSY PRE VSB A2-254-25-130 used on 001A, 001M			001
-010B	A225401304-764		. . HOUSING ASSY used on 001B			001

- ITEM NOT ILLUSTRATED

FIG. ITEM	PART NUMBER	AIRLINE STOCK NUMBER	NOMENCLATURE 1234567	EFF CODE	UNITS PER ASSY
-010C	A225401304-852		. . HOUSING ASSY used on 001C		001
-010D	A225401304-856		. . HOUSING ASSY used on 001D		001
-010E	A225401304-858		. . HOUSING ASSY used on 001E		001
-010F	A225401304-756		. . HOUSING ASSY used on 001F		001
-010G	A225401304-762		. . HOUSING ASSY used on 001G		001
-010H	A225401304-766		. . HOUSING ASSY used on 001H		001
-010J	A225401304-860		. . HOUSING ASSY used on 001J		001
-010K	A225401305-544		. . HOUSING ASSY used on 001K		001
-010L	A225401304-862		. . HOUSING ASSY used on 001L		001
-010M	A225401301-714		. . HOUSING ASSY POST SB 25-1742 used on 001N		001
-010N	A225401304-808		. . HOUSING ASSY POST VSB A2-254-25-130 used on 001P		001
020A	0-112-0016-2000		. . . STRIP-SLIDING USE AS REQUIRED used on 010A, 010B, 010C, 010D, 010E, 010F, 010G, 010H, 010J, 010K, 010L, 010M, 010N		AR

- ITEM NOT ILLUSTRATED

FIG. ITEM	PART NUMBER	AIRLINE STOCK NUMBER	NOMENCLATURE 1234567	EFF CODE	UNITS PER ASSY
030A	0-112-0015-2000		. . . STRIP-SLIDING USE AS REQUIRED used on 010A, 010B, 010C, 010D, 010E, 010F, 010G, 010H, 010J, 010K, 010L, 010M, 010N		AR
-040A	NSA935405-01		. . . MOUNT used on 010A, 010B, 010C, 010D, 010E, 010F, 010G, 010H, 010J, 010K, 010L, 010M, 010N		035
050A	A225400232-208		. . . FITTING used on 010A, 010B, 010C, 010D, 010E, 010F, 010G, 010H, 010J, 010K, 010L, 010M, 010N		002
060A	ABS0704-6-50		. . . SCREW used on 010A, 010B, 010C, 010D, 010E, 010F, 010G, 010H, 010J, 010K, 010L, 010M, 010N		004
-070A	NAS1833C08-370		. . . INSERT used on 010A, 010B, 010C, 010D, 010E, 010F, 010G, 010H, 010J, 010K, 010L, 010M, 010N		096
-080A	NAS1835C08		. . . INSERT used on 010A, 010B, 010C, 010D, 010E, 010F, 010G, 010H, 010J, 010K, 010L, 010M, 010N		015
-090A	NSA5345-06C		. . . INSERT used on 010A, 010B, 010C, 010D, 010E, 010F, 010G, 010H, 010J, 010K, 010L, 010N		004
-100A	NSA5345-08C		. . . INSERT used on 010A, 010B, 010C, 010D, 010E, 010F, 010G, 010H, 010J, 010K, 010L, 010M, 010N		003

- ITEM NOT ILLUSTRATED

FIG. ITEM	PART NUMBER	AIRLINE STOCK NUMBER	NOMENCLATURE 1234567	EFF CODE	UNITS PER ASSY
-110A	EF1842-06C2		. . . INSERT used on 010A, 010B, 010C, 010D, 010E, 010F, 010G, 010H, 010J, 010K, 010L, 010M, 010N		004
120A	NAS1096-2-8		. . . SCREW BUY PN NAS1801-08-8 used on 010A, 010B, 010C, 010D, 010E, 010F, 010G, 010H, 010J, 010K, 010L, 010M, 010N		002
130A	NAS1096-3-8		. . . SCREW BUY PN NAS1801-3-8 used on 010A, 010B, 010C, 010D, 010E, 010F, 010G, 010H, 010J, 010K, 010L, 010M, 010N		005
140A	NAS1149CN832R		. . . WASHER used on 010A, 010B, 010C, 010D, 010E, 010F, 010G, 010H, 010J, 010K, 010L, 010M, 010N		002
150A	NAS1149C0332R		. . . WASHER used on 010A, 010B, 010C, 010D, 010E, 010F, 010G, 010H, 010J, 010K, 010L, 010M, 010N		005
160A	A2-254-0006-01		. . MIRROR-GLASS PRE VSB A2-254-25-130 used on 001A, 001B, 001C, 001D, 001E, 001F, 001G, 001H, 001J, 001K, 001L, 001M, 001N		001
-160B	A225400470-000		. . MIRROR ASSY POST VSB A2-254-25-130 used on 001B, 001C, 001D, 001E, 001F, 001G, 001H, 001J, 001K, 001L, 001N, 001P		001

- ITEM NOT ILLUSTRATED

FIG. ITEM	PART NUMBER	AIRLINE STOCK NUMBER	NOMENCLATURE 1234567	EFF CODE	UNITS PER ASSY
163A	A225400470-200		. . . MIRROR POST VSB A2-254-25-130 used on 160B		001
165A	A2-254-0006A01		. . . PANEL-DOOR,MIRROR POST VSB A2-254-25-130 used on 160B		001
167A	SC0TCH4032-25		. . . FILM-ADHESIVE POST VSB A2-254-25-130 USE AS REQUIRED SC0TCHM0UNT4032-25 used on 160B		AR
170A	A225400451-200		. . STUD used on 001A, 001B, 001C, 001D, 001E, 001F, 001G, 001H, 001J, 001K, 001L, 001M, 001N, 001P		001
180A	NAS1100-08-4		. . SCREW used on 001A, 001B, 001C, 001D, 001E, 001F, 001G, 001H, 001J, 001K, 001L, 001M, 001N, 001P		003
190A	A225400224-212		. . SECTION used on 001A, 001B, 001C, 001D, 001E, 001F, 001G, 001H, 001J, 001K, 001L, 001M, 001N, 001P		001
200A	ABS0307A2-11		. . SECTION-SEALING USE AS REQUIRED BUY PN ABS0307AB2-11 used on 001A, 001B, 001C, 001D, 001E, 001F, 001G, 001H, 001J, 001K, 001L, 001M, 001N, 001P		AR

- ITEM NOT ILLUSTRATED

FIG. ITEM	PART NUMBER	AIRLINE STOCK NUMBER	NOMENCLATURE 1234567	EFF CODE	UNITS PER ASSY
210A	A225400500-200		. . PLACARD used on 001A, 001B, 001C, 001D, 001E, 001F, 001G, 001H, 001J, 001K, 001L, 001M, 001N, 001P		001
220A	A225400500-202		. . PLACARD used on 001A, 001B, 001C, 001D, 001E, 001F, 001G, 001H, 001J, 001K, 001L, 001M, 001N, 001P		001
230A	NAS1096-3-10		. . SCREW BUY PN NAS1801-3-10 used on 001A, 001B, 001C, 001D, 001E, 001F, 001G, 001H, 001J, 001K, 001L, 001M, 001N, 001P		001
240A	NAS1149C0332R		. . WASHER used on 001A, 001B, 001C, 001D, 001E, 001F, 001G, 001H, 001J, 001K, 001L, 001M, 001N, 001P		001
250A	D2528641100600		. . COVER-DECOR used on 001A, 001B, 001C, 001D, 001E, 001F, 001G, 001H, 001J, 001K, 001L, 001M		003
-250B	D2528641100695		. . COVER-DECOR POST SB 25-1666 POST SB 25-1305 used on 001A, 001B, 001C, 001D, 001E, 001F, 001G, 001H, 001J, 001K, 001L, 001M, 001N, 001P		003

- ITEM NOT ILLUSTRATED

FIG. ITEM	PART NUMBER	AIRLINE STOCK NUMBER	NOMENCLATURE 1234567	EFF CODE	UNITS PER ASSY
-255A	DIN65399-3206CF		. . . RIVET POST SB 25-1666 BUY PN EN6101D4-04 used on 250B		002
260A	NAS1102-04-6		. . SCREW used on 001A, 001B, 001C, 001D, 001E, 001F, 001G, 001H, 001J, 001K, 001L, 001M, 001N, 001P		018

- ITEM NOT ILLUSTRATED

THIS PAGE IS INTENTIONALLY LEFT BLANK

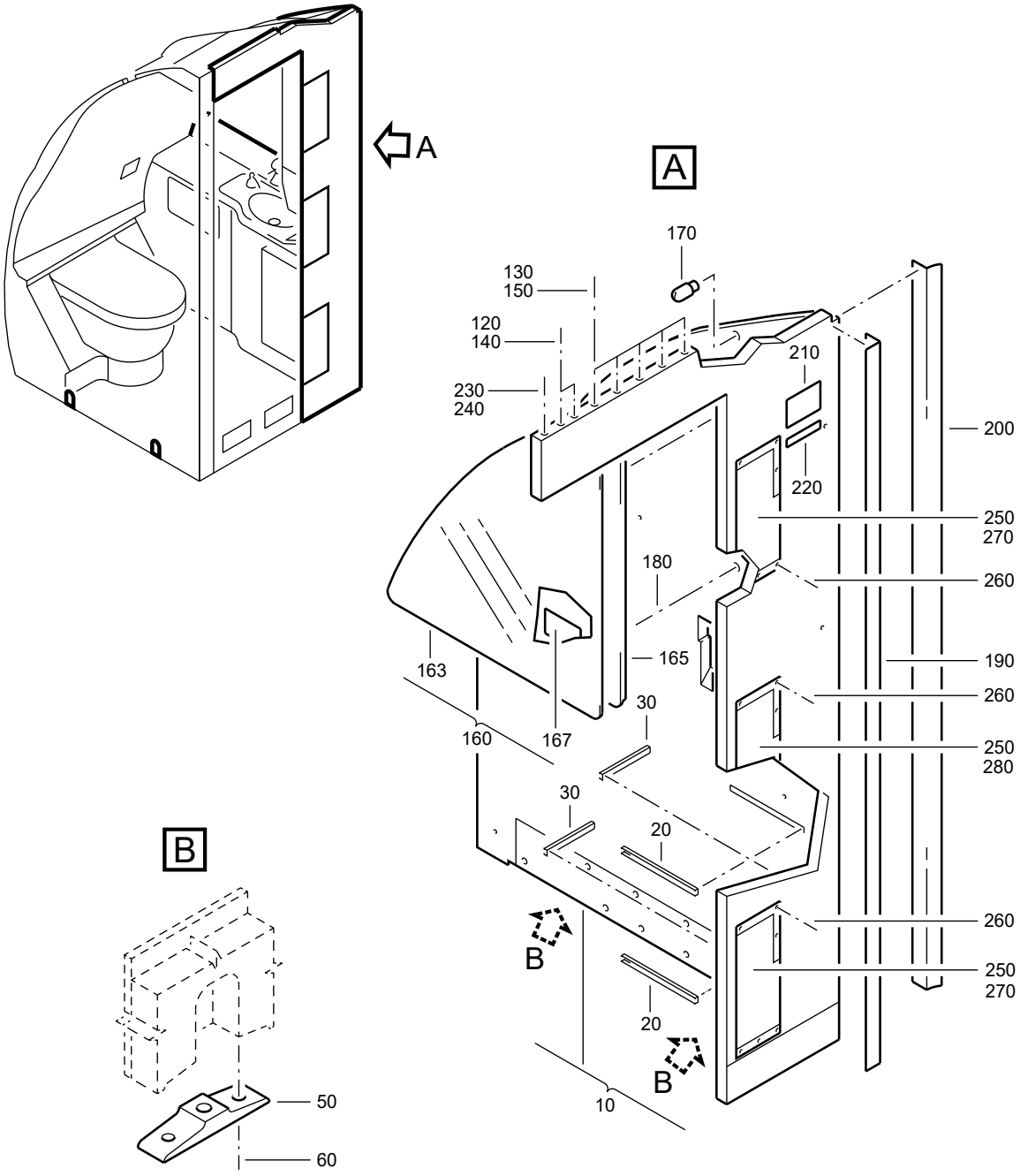

F_PL_254151_07_T_01_00

HOUSING
Figure 07T/EN254151SHEET07T01

FIG. ITEM	PART NUMBER	AIRLINE STOCK NUMBER	NOMENCLATURE 1234567		EFF CODE	UNITS PER ASSY
07T						
-001A	D2549020805466		. HOUSING used on 050H (254151420), 050B (25415142A), 050C(25415142E) SEE 25-41-51-420 FOR NHA SEE 25-41-51-42A FOR NHA SEE 25-41-51-42E FOR NHA	NP		RF
-001B	D2549020805866		. HOUSING PRE VSB A2-254-25-130 used on 050D (254151420) SEE 25-41-51-420 FOR NHA	NP		RF
-001C	D2549030401266		. HOUSING used on 050D (25415142A) SEE 25-41-51-42A FOR NHA	NP		RF
-001D	D2549030406466		. HOUSING used on 050K (254151420), 050E (25415142A), 050D(25415142E) SEE 25-41-51-420 FOR NHA SEE 25-41-51-42A FOR NHA SEE 25-41-51-42E FOR NHA	NP		RF

- ITEM NOT ILLUSTRATED

FIG. ITEM	PART NUMBER	AIRLINE STOCK NUMBER	NOMENCLATURE 1234567		EFF CODE	UNITS PER ASSY
-001E	D2549010400466		. HOUSING used on 050K (25415141Z), 050J (254151420), 050F(25415142A), 050A (25415142B), 050B (25415142C), 050D(25415142C), 050D (25415142D), 050B (25415142E), 050G(25415142F), 050D (25415142G) SEE 25-41-51-41Z FOR NHA SEE 25-41-51-420 FOR NHA SEE 25-41-51-42A FOR NHA SEE 25-41-51-42B FOR NHA SEE 25-41-51-42C FOR NHA SEE 25-41-51-42C FOR NHA SEE 25-41-51-42D FOR NHA SEE 25-41-51-42E FOR NHA SEE 25-41-51-42F FOR NHA SEE 25-41-51-42G FOR NHA	NP		RF
-001F	D2549030407066		. HOUSING used on 050G (25415142A), 050D (25415142B) SEE 25-41-51-42A FOR NHA SEE 25-41-51-42B FOR NHA	NP		RF
-001G	D2549030406866		. HOUSING used on 050H (25415142A), 050A (25415142D), 050D (25415142F) SEE 25-41-51-42A FOR NHA SEE 25-41-51-42D FOR NHA SEE 25-41-51-42F FOR NHA	NP		RF
-001H	D2549020814266		. HOUSING used on 050J (25415142A), 050A (25415142F) SEE 25-41-51-42A FOR NHA SEE 25-41-51-42F FOR NHA	NP		RF

- ITEM NOT ILLUSTRATED

FIG. ITEM	PART NUMBER	AIRLINE STOCK NUMBER	NOMENCLATURE 1234567	EFF CODE	UNITS PER ASSY
-001J	D2549020812266		. HOUSING NP used on 050K (25415142A), 050H (25415142B) SEE 25-41-51-42A FOR NHA SEE 25-41-51-42B FOR NHA		RF
-001K	D2549020814466		. HOUSING NP used on 050G (254151420), 050B (25415142B), 050B(25415142D) SEE 25-41-51-420 FOR NHA SEE 25-41-51-42B FOR NHA SEE 25-41-51-42D FOR NHA		RF
-001L	D2549020812866		. HOUSING NP POST SB 25-1640 used on 050C (25415142B) SEE 25-41-51-42B FOR NHA		RF
-001M	D2549010611466		. HOUSING NP used on 050F (254151420) SEE 25-41-51-420 FOR NHA		RF
-001P	D2547160007266		. HOUSING NP POST SB 25-1640 used on 050L (25415142B) SEE 25-41-51-42B FOR NHA		RF
-001Q	R22540119606066		. HOUSING NP POST VSB A2-254-25-130 used on 050M (254151420) SEE 25-41-51-420 FOR NHA		RF
010A	A225401305-510		. . HOUSING ASSY used on 001A		001
-010B	A225401305-502		. . HOUSING ASSY PRE VSB A2-254-25-130 used on 001B, 001D		001
-010C	A225401304-854		. . HOUSING ASSY used on 001C		001

- ITEM NOT ILLUSTRATED

FIG. ITEM	PART NUMBER	AIRLINE STOCK NUMBER	NOMENCLATURE 1234567	EFF CODE	UNITS PER ASSY
-010D	A225401305-514		. . HOUSING ASSY used on 001E		001
-010E	A225401305-512		. . HOUSING ASSY used on 001F		001
-010F	A225401305-508		. . HOUSING ASSY used on 001G		001
-010G	A225401305-504		. . HOUSING ASSY used on 001H		001
-010H	A225401305-524		. . HOUSING ASSY used on 001J		001
-010J	A225401305-532		. . HOUSING ASSY used on 001K		001
-010K	A225401305-530		. . HOUSING ASSY used on 001L, 001P		001
-010L	A225401305-528		. . HOUSING ASSY used on 001M		001
-010M	A225401305-580		. . HOUSING ASSY POST VSB A2-254-25-130 used on 001Q		001
020A	0-112-0016-2000		. . . STRIP-SLIDING USE AS REQUIRED used on 010A, 010B, 010C, 010D, 010E, 010F, 010G, 010H, 010J, 010K, 010L, 010M		AR
030A	0-112-0015-2000		. . . STRIP-SLIDING USE AS REQUIRED used on 010A, 010B, 010C, 010D, 010E, 010F, 010G, 010H, 010J, 010K, 010L, 010M		AR

- ITEM NOT ILLUSTRATED

FIG. ITEM	PART NUMBER	AIRLINE STOCK NUMBER	NOMENCLATURE 1234567	EFF CODE	UNITS PER ASSY
-040A	NSA935405-01		. . . MOUNT used on 010A, 010B, 010C, 010D, 010E, 010F, 010G, 010H, 010J, 010K, 010L, 010M		035
050A	A225400232-208		. . . FITTING used on 010A, 010B, 010C, 010D, 010E, 010F, 010G, 010H, 010J, 010K, 010L, 010M		002
060A	ABS0704-6-50		. . . SCREW used on 010A, 010B, 010C, 010D, 010E, 010F, 010G, 010H, 010J, 010K, 010L, 010M		004
-070A	NAS1833C08-370		. . . INSERT USE AS REQUIRED used on 010A, 010B, 010C, 010D, 010E, 010F, 010G, 010H, 010J, 010K, 010L, 010M		AR
-080A	NAS1835C08		. . . INSERT used on 010A, 010B, 010C, 010D, 010E, 010F, 010G, 010H, 010J, 010K, 010L, 010M		024
-090A	NSA5345-06C		. . . INSERT USE AS REQUIRED used on 010A, 010B, 010C, 010D, 010E, 010F, 010G, 010H, 010J, 010K, 010L, 010M		AR
-100A	NSA5345-08C		. . . INSERT used on 010A, 010B, 010C, 010D, 010E, 010F, 010G, 010H, 010J, 010K, 010L, 010M		003

- ITEM NOT ILLUSTRATED

FIG. ITEM	PART NUMBER	AIRLINE STOCK NUMBER	NOMENCLATURE 1234567	EFF CODE	UNITS PER ASSY
-110A	EF1842-06C2		. . . INSERT used on 010A, 010B, 010C, 010D, 010E, 010F, 010G, 010H, 010J, 010K, 010L, 010M		004
120A	NAS1096-2-8		. . . SCREW BUY PN NAS1801-08-8 used on 010A, 010B, 010C, 010D, 010E, 010F, 010G, 010H, 010J, 010K, 010L, 010M		002
130A	NAS1096-3-8		. . . SCREW BUY PN NAS1801-3-8 used on 010A, 010B, 010C, 010D, 010E, 010F, 010G, 010H, 010J, 010K, 010L, 010M		005
140A	NAS1149CN832R		. . . WASHER used on 010A, 010B, 010C, 010D, 010E, 010F, 010G, 010H, 010J, 010K, 010L, 010M		002
150A	NAS1149C0332R		. . . WASHER used on 010A, 010B, 010C, 010D, 010E, 010F, 010G, 010H, 010J, 010K, 010L, 010M		005
160A	A2-254-0006-01		. . MIRROR-GLASS used on 001A, 001B, 001C, 001D, 001E, 001F, 001G, 001H, 001J, 001K, 001L, 001M, 001P		001
-160B	A225400470-000		. . MIRROR-GLASS used on 001A, 001C, 001D, 001E, 001F, 001G, 001H, 001J, 001K, 001L, 001M, 001P, 001Q		001
163A	A225400470-200		. . . MIRROR used on 160B		001

- ITEM NOT ILLUSTRATED

FIG. ITEM	PART NUMBER	AIRLINE STOCK NUMBER	NOMENCLATURE 1234567	EFF CODE	UNITS PER ASSY
165A	A2-254-0006A01		. . . PANEL-DOOR,MIRROR used on 160B		001
167A	SC0TCH4032-25		. . . FILM-ADHESIVE USE AS REQUIRED SC0TCHM0UNT4032-25 used on 160B		AR
170A	A225400451-200		. . STUD used on 001A, 001B, 001C, 001D, 001E, 001F, 001G, 001H, 001J, 001K, 001L, 001M, 001P, 001Q		001
180A	NAS1100-08-4		. . SCREW used on 001A, 001B, 001C, 001D, 001E, 001F, 001G, 001H, 001J, 001K, 001L, 001M, 001P, 001Q		003
190A	A225400224-212		. . SECTION used on 001A, 001B, 001C, 001D, 001E, 001F, 001G, 001H, 001J, 001K, 001L, 001M, 001P, 001Q		001
200A	ABS0307A2-11		. . SECTION-SEALING USE AS REQUIRED BUY PN ABS0307AB2-11 used on 001A, 001B, 001C, 001D, 001E, 001F, 001G, 001H, 001J, 001K, 001L, 001M, 001P, 001Q		AR
210A	A225400500-200		. . PLACARD used on 001A, 001B, 001C, 001D, 001E, 001F, 001G, 001H, 001J, 001K, 001L, 001M, 001P, 001Q		001

- ITEM NOT ILLUSTRATED

FIG. ITEM	PART NUMBER	AIRLINE STOCK NUMBER	NOMENCLATURE 1234567	EFF CODE	UNITS PER ASSY
220A	A225400500-202		. . PLACARD used on 001A, 001B, 001C, 001D, 001E, 001F, 001G, 001H, 001J, 001K, 001L, 001M, 001Q		001
-220B	A225400500-204		. . PLACARD POST SB 25-1640 used on 001P		001
230A	NAS1801-3-10		. . SCREW POST SB 25-1640 used on 001A, 001B, 001C, 001D, 001E, 001F, 001G, 001H, 001J, 001K, 001L, 001M, 001P, 001Q		001
240A	NAS1149C0332R		. . WASHER used on 001A, 001B, 001C, 001D, 001E, 001F, 001G, 001H, 001J, 001K, 001L, 001M, 001P, 001Q		001
250A	D2528641100600		. . COVER-DECOR used on 001A, 001B, 001C, 001D, 001E, 001F, 001G, 001H, 001J, 001K, 001L, 001M, 001Q		003
260A	NAS1102-04-6		. . SCREW used on 001A, 001B, 001C, 001D, 001E, 001F, 001G, 001H, 001J, 001K, 001L, 001M, 001P, 001Q		018
270A	D2528641100600		. . COVER-DECOR used on 001P		002
280A	D2528641102000		. . COVER-DECOR POST SB 25-1400 used on 001P		001

- ITEM NOT ILLUSTRATED

THIS PAGE IS INTENTIONALLY LEFT BLANK

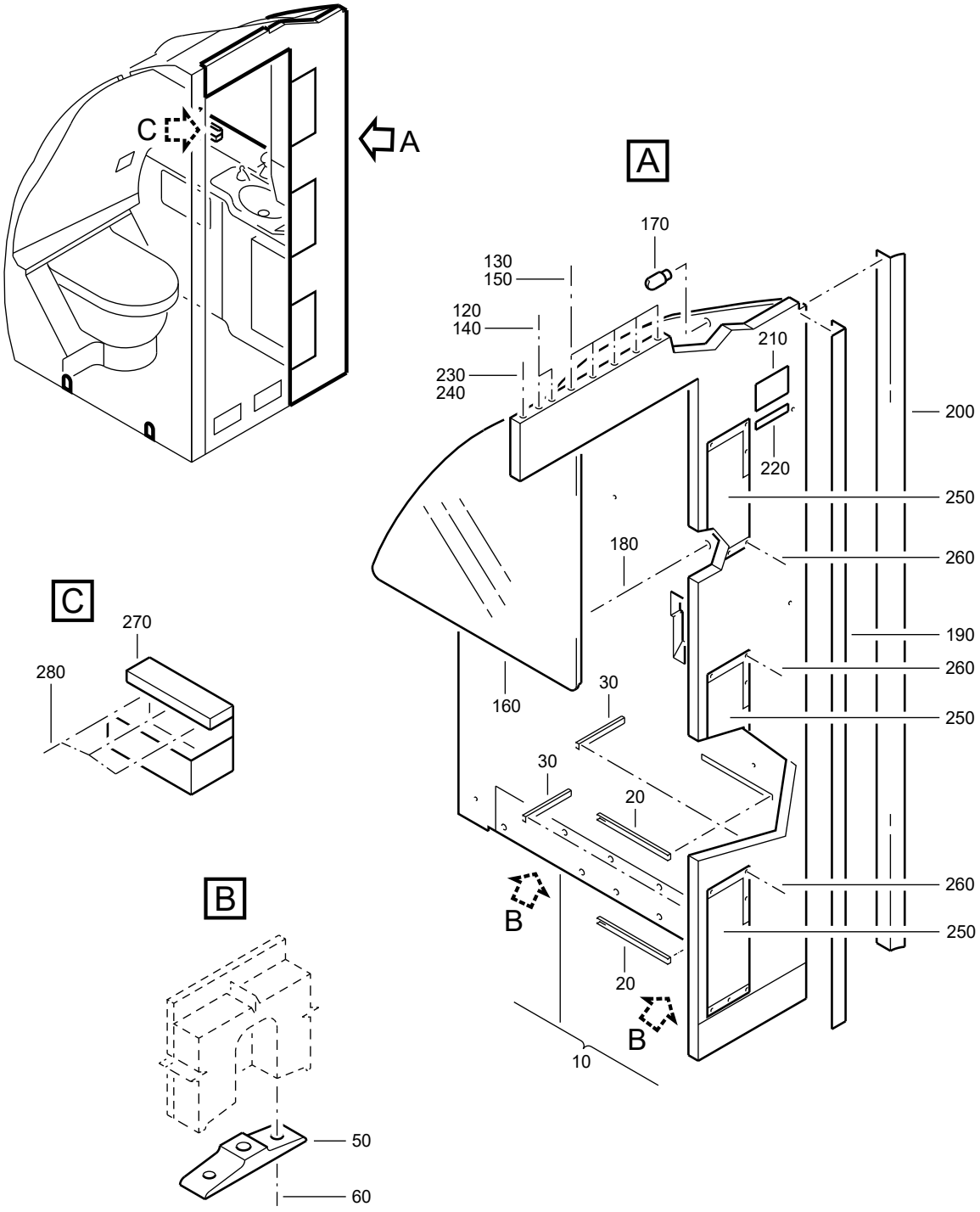

F_PL_254151_07_U_01_00

HOUSING
Figure 07U/EN254151SHEET07U01

FIG. ITEM	PART NUMBER	AIRLINE STOCK NUMBER	NOMENCLATURE 1234567		EFF CODE	UNITS PER ASSY
07U						
-001A	D2549010400266		. HOUSING used on 050L (25415141Z), 050E (25415142B), 050H(25415142C), 050B (25415142F) SEE 25-41-51-41Z FOR NHA SEE 25-41-51-42B FOR NHA SEE 25-41-51-42C FOR NHA SEE 25-41-51-42F FOR NHA	NP		RF
-001B	D2549030407266		. HOUSING used on 050E (254151420) SEE 25-41-51-420 FOR NHA	NP		RF
-001C	D2549010613666		. HOUSING used on 050F (25415142B), 050K (25415142N) SEE 25-41-51-42B FOR NHA SEE 25-41-51-42N FOR NHA	NP		RF
-001D	D2549030614066		. HOUSING used on 050G (25415142B) SEE 25-41-51-42B FOR NHA	NP		RF
-001E	D2549020801866		. HOUSING used on 050F (25415142C) SEE 25-41-51-42C FOR NHA	NP		RF
-001F	D2549020813066		. HOUSING used on 050J (25415142B), 050F (25415142F) SEE 25-41-51-42B FOR NHA SEE 25-41-51-42F FOR NHA	NP		RF
-001G	D2549040500266		. HOUSING used on 050K (25415142B) SEE 25-41-51-42B FOR NHA	NP		RF
-001H	D2549030404666		. HOUSING used on 050A (254151420) SEE 25-41-51-420 FOR NHA	NP		RF

- ITEM NOT ILLUSTRATED

FIG. ITEM	PART NUMBER	AIRLINE STOCK NUMBER	NOMENCLATURE 1234567		EFF CODE	UNITS PER ASSY
-001J	D2549030405066		. HOUSING used on 050J (25415141Z) SEE 25-41-51-41Z FOR NHA	NP		RF
-001K	D2549020814866		. HOUSING used on 050C (25415142C) SEE 25-41-51-42C FOR NHA	NP		RF
-001L	D2549030408066		. HOUSING PRE VSB A2-254-25-106 used on 050E (25415142C), 050E (25415142G) SEE 25-41-51-42C FOR NHA SEE 25-41-51-42G FOR NHA	NP		RF
-001M	D2549020810866		. HOUSING used on 050C (25415142D) SEE 25-41-51-42D FOR NHA	NP		RF
-001N	R22540166200066		. HOUSING POST VSB A2-254-25-106 used on 050L (25415142C), 050M (25415142G) SEE 25-41-51-42C FOR NHA SEE 25-41-51-42G FOR NHA	NP		RF
010A	A225401305-536		. . HOUSING ASSY used on 001A			001
-010B	A225401305-526		. . HOUSING ASSY used on 001B			001
-010C	A225401305-550		. . HOUSING ASSY used on 001C			001
-010D	A225401305-522		. . HOUSING ASSY used on 001D			001
-010E	A225401305-538		. . HOUSING ASSY used on 001E			001

- ITEM NOT ILLUSTRATED

FIG. ITEM	PART NUMBER	AIRLINE STOCK NUMBER	NOMENCLATURE 1234567	EFF CODE	UNITS PER ASSY
-010F	A225401305-540		. . HOUSING ASSY used on 001F		001
-010G	A225401305-562		. . HOUSING ASSY used on 001G		001
-010H	A225401305-546		. . HOUSING ASSY used on 001H		001
-010J	A225401305-542		. . HOUSING ASSY used on 001J		001
-010K	A225401305-548		. . HOUSING ASSY used on 001K		001
-010L	A225401305-552		. . HOUSING ASSY PRE VSB A2-254-25-106 used on 001L		001
-010M	A225401305-542		. . HOUSING ASSY used on 001M		001
-010N	A225401305-576		. . HOUSING ASSY POST VSB A2-254-25-106 used on 001N		001
020A	0-112-0016-2000		. . . STRIP-SLIDING USE AS REQUIRED used on 010A, 010B, 010C, 010D, 010E, 010F, 010G, 010H, 010J, 010K, 010L, 010M, 010N		AR
030A	0-112-0015-2000		. . . STRIP-SLIDING USE AS REQUIRED used on 010A, 010B, 010C, 010D, 010E, 010F, 010G, 010H, 010J, 010K, 010L, 010M, 010N		AR

- ITEM NOT ILLUSTRATED

FIG. ITEM	PART NUMBER	AIRLINE STOCK NUMBER	NOMENCLATURE 1234567	EFF CODE	UNITS PER ASSY
-040A	NSA935405-01		. . . MOUNT used on 010A, 010B, 010C, 010D, 010E, 010F, 010G, 010H, 010J, 010K, 010L, 010M, 010N		035
050A	A225400232-208		. . . FITTING used on 010A, 010B, 010C, 010D, 010E, 010F, 010G, 010H, 010J, 010K, 010L, 010M, 010N		002
060A	ABS0704-6-50		. . . SCREW used on 010A, 010B, 010C, 010D, 010E, 010F, 010G, 010H, 010J, 010K, 010L, 010M, 010N		004
-070A	NAS1833C08-370		. . . INSERT used on 010A, 010B, 010C, 010D, 010E, 010F, 010G, 010H, 010J, 010K, 010L, 010M, 010N		093
-080A	NAS1835C08		. . . INSERT used on 010A, 010B, 010C, 010D, 010E, 010F, 010G, 010H, 010J, 010K, 010L, 010M, 010N		019
-090A	NSA5345-06C		. . . INSERT used on 010A, 010B, 010C, 010D, 010E, 010F, 010G, 010H, 010J, 010K, 010L, 010M, 010N		004
-100A	NSA5345-08C		. . . INSERT used on 010A, 010B, 010C, 010D, 010E, 010F, 010G, 010H, 010J, 010K, 010L, 010M, 010N		003
-110A	EF1842-06C2		. . . INSERT used on 010A, 010B, 010C, 010D, 010E, 010F, 010G, 010H, 010J, 010K, 010L, 010M, 010N		004

- ITEM NOT ILLUSTRATED

FIG. ITEM	PART NUMBER	AIRLINE STOCK NUMBER	NOMENCLATURE 1234567	EFF CODE	UNITS PER ASSY
-115A	NSA5054-08		. . . INSERT used on 010C		004
120A	NAS1096-2-8		. . . SCREW BUY PN NAS1801-08-8 used on 010A, 010B, 010C, 010D, 010E, 010F, 010G, 010H, 010J, 010K, 010L, 010M, 010N		002
130A	NAS1096-3-8		. . . SCREW BUY PN NAS1801-3-8 used on 010A, 010B, 010C, 010D, 010E, 010F, 010G, 010H, 010J, 010K, 010L, 010M, 010N		005
140A	NAS1149CN832R		. . . WASHER used on 010A, 010B, 010C, 010D, 010E, 010F, 010G, 010H, 010J, 010K, 010L, 010M, 010N		002
150A	NAS1149C0332R		. . . WASHER used on 010A, 010B, 010C, 010D, 010E, 010F, 010G, 010H, 010J, 010K, 010L, 010M, 010N		005
160A	A2-254-0006-01		. . MIRROR-GLASS used on 001A, 001B, 001C, 001D, 001E, 001F, 001G, 001H, 001J, 001K, 001L, 001M, 001N		001
170A	A225400451-200		. . STUD used on 001A, 001B, 001C, 001D, 001E, 001F, 001G, 001H, 001J, 001K, 001L, 001M, 001N		001
180A	NAS1100-08-4		. . SCREW PRE VSB A2-254-25-106 used on 001A, 001B, 001C, 001D, 001E, 001F, 001G, 001H, 001J, 001K, 001L, 001M		003

- ITEM NOT ILLUSTRATED

FIG. ITEM	PART NUMBER	AIRLINE STOCK NUMBER	NOMENCLATURE 1234567	EFF CODE	UNITS PER ASSY
-180B	NAS1100-08-5		. . SCREW POST VSB A2-254-25-106 used on 001N		003
190A	A225400224-212		. . SECTION used on 001A, 001B, 001C, 001D, 001E, 001F, 001G, 001H, 001J, 001K, 001L, 001M, 001N		001
200A	ABS0307A2-11		. . SECTION-SEALING USE AS REQUIRED BUY PN ABS0307AB2-11 used on 001A, 001B, 001C, 001D, 001E, 001F, 001G, 001H, 001J, 001K, 001L, 001M, 001N		AR
210A	A225400500-200		. . PLACARD used on 001A, 001B, 001C, 001D, 001E, 001F, 001G, 001H, 001J, 001K, 001L, 001M, 001N		001
220A	A225400500-202		. . PLACARD used on 001A, 001B, 001C, 001D, 001E, 001F, 001G, 001H, 001J, 001K, 001L, 001M, 001N		001
230A	NAS1096-3-10		. . SCREW BUY PN NAS1801-3-10 used on 001A, 001B, 001C, 001D, 001E, 001F, 001G, 001H, 001J, 001K, 001L, 001M, 001N		001
240A	NAS1149C0332R		. . WASHER used on 001A, 001B, 001C, 001D, 001E, 001F, 001G, 001H, 001J, 001K, 001L, 001M, 001N		001

- ITEM NOT ILLUSTRATED

FIG. ITEM	PART NUMBER	AIRLINE STOCK NUMBER	NOMENCLATURE 1234567	EFF CODE	UNITS PER ASSY
250A	D2528641100600		. . COVER-DECOR used on 001A, 001B, 001C, 001D, 001E, 001F, 001G, 001H, 001J, 001K, 001L, 001M, 001N		003
260A	NAS1102-04-6		. . SCREW used on 001A, 001B, 001C, 001D, 001E, 001F, 001G, 001H, 001J, 001K, 001L, 001M, 001N		018
270A	1240-77		. . HOLDER-COSMETICS used on 001D		001
280A	NAS1304-2		. . BOLT BUY PN NAS6604-2 used on 001D		003
-290A	12543000		. . PLUG POST VSB A2-254-25-106 used on 001N		004

- ITEM NOT ILLUSTRATED

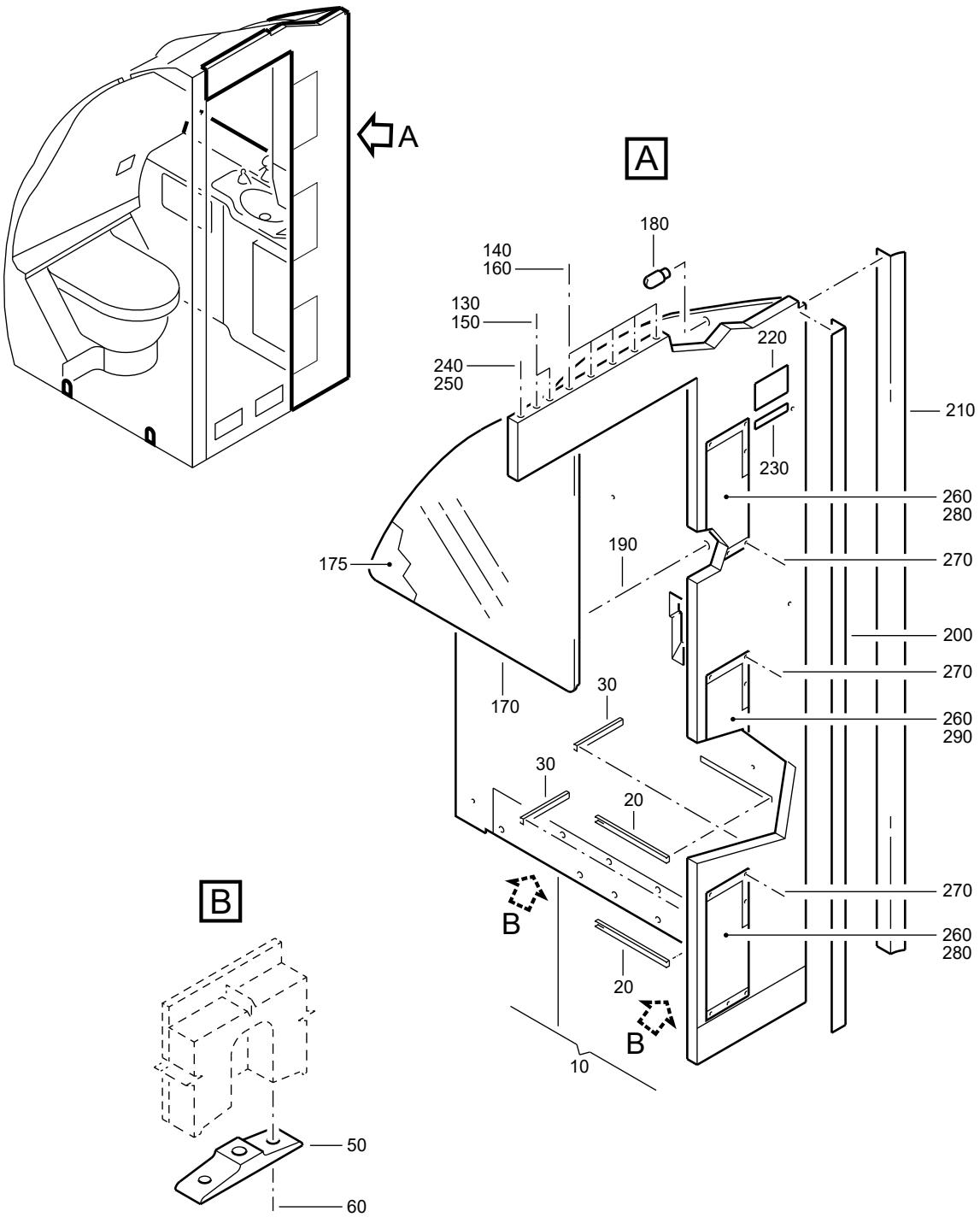

F_PL_254151_07_V_01_00

HOUSING
Figure 07V/EN254151SHEET07V01

FIG. ITEM	PART NUMBER	AIRLINE STOCK NUMBER	NOMENCLATURE 1234567		EFF CODE	UNITS PER ASSY
07V						
-001A	D2549020813466		. HOUSING used on 050G (25415142C) SEE 25-41-51-42C FOR NHA	NP		RF
-001B	D2549010614666		. HOUSING used on 050J (25415142C) SEE 25-41-51-42C FOR NHA	NP		RF
-001C	D2549020400266		. HOUSING used on 050K (25415142C) SEE 25-41-51-42C FOR NHA	NP		RF
-001D	D2549020813266		. HOUSING used on 050E (25415142D) SEE 25-41-51-42D FOR NHA	NP		RF
-001E	D2549010400866		. HOUSING used on 050F (25415142D) SEE 25-41-51-42D FOR NHA	NP		RF
-001F	D2549030408266		. HOUSING used on 050G (25415142D) SEE 25-41-51-42D FOR NHA	NP		RF
-001G	D2549020403866		. HOUSING used on 050H (25415142D) SEE 25-41-51-42D FOR NHA	NP		RF
-001H	D2549030408466		. HOUSING used on 050J (25415142D) SEE 25-41-51-42D FOR NHA	NP		RF
-001J	D2549030409866		. HOUSING used on 050K (25415142D) SEE 25-41-51-42D FOR NHA	NP		RF
-001K	D2549020805266		. HOUSING used on 050A (25415142E) SEE 25-41-51-42E FOR NHA	NP		RF

- ITEM NOT ILLUSTRATED

FIG. ITEM	PART NUMBER	AIRLINE STOCK NUMBER	NOMENCLATURE 1234567	EFF CODE	UNITS PER ASSY
-001L	D2549020513866		. HOUSING NP used on 050C (25415142F) SEE 25-41-51-42F FOR NHA		RF
-001M	D2549030406666		. HOUSING NP used on 050E (25415142E) SEE 25-41-51-42E FOR NHA		RF
-001N	D2549010400066		. HOUSING NP PRE VSB A2-254-25-013 used on 050L (25415142D), 050E (25415142K) SEE 25-41-51-42D FOR NHA SEE 25-41-51-42K FOR NHA		RF
-001P	D2549010400066		. HOUSING NP POST VSB A2-254-25-013 used on 050M (25415142D) used on 050N (25415142K) SEE 25-41-51-42D FOR NHA SEE 25-41-51-42K FOR NHA		RF
010A	A225401305-520		. . HOUSING ASSY used on 001A		001
-010B	A2254013058556		. . HOUSING ASSY POST SB 25-1314 used on 001B		001
-010C	A225401305-518		. . HOUSING ASSY used on 001C		001
-010D	A225401305-554		. . HOUSING ASSY used on 001D		001
-010E	A225401305-558		. . HOUSING ASSY used on 001E		001
-010F	A225401305-564		. . HOUSING ASSY used on 001F		001

- ITEM NOT ILLUSTRATED

FIG. ITEM	PART NUMBER	AIRLINE STOCK NUMBER	NOMENCLATURE 1234567	EFF CODE	UNITS PER ASSY
-010G	A2254013058568		. . HOUSING ASSY POST SB 25-1314 used on 001G		001
-010H	A225401305-566		. . HOUSING ASSY used on 001H		001
-010J	A225401304-870		. . HOUSING ASSY used on 001J		001
-010K	A225401305-506		. . HOUSING ASSY used on 001K		001
-010L	A225401305-538		. . HOUSING ASSY used on 001L		001
-010M	A225401305-560		. . HOUSING ASSY used on 001M		001
-010N	A2254013058558		. . HOUSING ASSY POST SB 25-1314 used on 001N, 001P		001
020A	0-112-0016-2000		. . . STRIP-SLIDING USE AS REQUIRED used on 010A, 010B, 010C, 010D, 010E, 010F, 010G, 010H, 010J, 010K, 010L, 010M, 010N		AR
030A	0-112-0015-2000		. . . STRIP-SLIDING USE AS REQUIRED used on 010A, 010B, 010C, 010D, 010E, 010F, 010G, 010H, 010J, 010K, 010L, 010M, 010N		AR
-040A	NSA935405-01		. . . MOUNT used on 010A, 010B, 010C, 010D, 010E, 010F, 010G, 010H, 010J, 010K, 010L, 010M, 010N		035

- ITEM NOT ILLUSTRATED

FIG. ITEM	PART NUMBER	AIRLINE STOCK NUMBER	NOMENCLATURE 1234567	EFF CODE	UNITS PER ASSY
050A	A225400232-208		. . . FITTING used on 010A, 010B, 010C, 010D, 010E, 010F, 010G, 010H, 010J, 010K, 010L, 010M, 010N		002
060A	ABS0704-6-50		. . . SCREW used on 010A, 010B, 010C, 010D, 010E, 010F, 010G, 010H, 010J, 010K, 010L, 010M, 010N		004
-070A	NAS1833C08-370		. . . INSERT USE AS REQUIRED POST SB 25-1448 used on 010A, 010B, 010C, 010D, 010E, 010F, 010G, 010H, 010J, 010K, 010L, 010M, 010N		AR
-080A	NAS1835C08		. . . INSERT used on 010A, 010B, 010C, 010D, 010E, 010F, 010G, 010H, 010J, 010K, 010L, 010M, 010N		018
-090A	NSA5345-06C		. . . INSERT used on 010A, 010B, 010C, 010D, 010E, 010F, 010G, 010H, 010J, 010K, 010L, 010M, 010N		004
-100A	NSA5345-08C		. . . INSERT used on 010A, 010B, 010C, 010D, 010E, 010F, 010G, 010H, 010J, 010K, 010L, 010M, 010N		003
-110A	EF1842-06C2		. . . INSERT used on 010A, 010B, 010C, 010D, 010E, 010F, 010G, 010H, 010J, 010K, 010L, 010M, 010N		004

- ITEM NOT ILLUSTRATED

FIG. ITEM	PART NUMBER	AIRLINE STOCK NUMBER	NOMENCLATURE 1234567	EFF CODE	UNITS PER ASSY
-120A	NSA5054-08		. . . INSERT used on 010A, 010B, 010C, 010D, 010E, 010F, 010G, 010H, 010J, 010K, 010L, 010M, 010N		004
130A	NAS1096-2-8		. . . SCREW BUY PN NAS1801-08-8 used on 010A, 010B, 010C, 010D, 010E, 010F, 010G, 010H, 010J, 010K, 010L, 010M, 010N		002
140A	NAS1096-3-8		. . . SCREW BUY PN NAS1801-3-8 used on 010A, 010B, 010C, 010D, 010E, 010F, 010G, 010H, 010J, 010K, 010L, 010M, 010N		005
150A	NAS1149CN832R		. . . WASHER used on 010A, 010B, 010C, 010D, 010E, 010F, 010G, 010H, 010J, 010K, 010L, 010M, 010N		002
160A	NAS1149C0332R		. . . WASHER used on 010A, 010B, 010C, 010D, 010E, 010F, 010G, 010H, 010J, 010K, 010L, 010M, 010N		005
170A	A2-254-0006-01		. . MIRROR-GLASS used on 001A, 001B, 001C, 001D, 001E, 001F, 001G, 001H, 001J, 001K, 001L, 001M, 001N, 001P		001
175A	120801		. . FOIL-SHADING,MIRROR used on 001K		001

- ITEM NOT ILLUSTRATED

FIG. ITEM	PART NUMBER	AIRLINE STOCK NUMBER	NOMENCLATURE 1234567	EFF CODE	UNITS PER ASSY
180A	A225400451-200		. . STUD used on 001A, 001B, 001C, 001D, 001E, 001F, 001G, 001H, 001J, 001K, 001L, 001M, 001N, 001P		001
190A	NAS1100-08-4		. . SCREW used on 001A, 001B, 001C, 001D, 001E, 001F, 001G, 001H, 001J, 001K, 001L, 001M, 001N, 001P		003
200A	A225400224-212		. . SECTION used on 001A, 001B, 001C, 001D, 001E, 001F, 001G, 001H, 001J, 001K, 001L, 001M, 001N, 001P		001
210A	ABS0307A2-11		. . SECTION-SEALING USE AS REQUIRED BUY PN ABS0307AB2-11 used on 001A, 001B, 001C, 001D, 001E, 001F, 001G, 001H, 001J, 001K, 001L, 001M, 001N, 001P		AR
220A	A225400500-200		. . PLACARD used on 001A, 001B, 001C, 001D, 001E, 001F, 001G, 001H, 001J, 001K, 001L, 001M, 001N, 001P		001
230A	A225400500-202		. . PLACARD used on 001A, 001B, 001C, 001D, 001E, 001F, 001G, 001H, 001J, 001K, 001L, 001M, 001N, 001P		001

- ITEM NOT ILLUSTRATED

FIG. ITEM	PART NUMBER	AIRLINE STOCK NUMBER	NOMENCLATURE 1234567	EFF CODE	UNITS PER ASSY
240A	NAS1096-3-10		. . SCREW BUY PN NAS1801-3-10 used on 001A, 001B, 001C, 001D, 001E, 001F, 001G, 001H, 001J, 001K, 001L, 001M, 001N, 001P		001
250A	NAS1149C0332R		. . WASHER used on 001A, 001B, 001C, 001D, 001E, 001F, 001G, 001H, 001J, 001K, 001L, 001M, 001N, 001P		001
260A	D2528641100600		. . COVER-DECOR used on 001A, 001B, 001C, 001D, 001E, 001F, 001G, 001H, 001J, 001K, 001L, 001M		003
270A	NAS1102-04-6		. . SCREW used on 001A, 001B, 001C, 001D, 001E, 001F, 001G, 001H, 001J, 001K, 001L, 001M, 001N, 001P		018
280A	D2528641100600		. . COVER-DECOR used on 001N, 001P		002
290A	D2528641102200		. . COVER-DECOR POST SB 25-1473 used on 001N, 001P		001
-300A	A825400501-210		. . LABEL POST VSB A2-254-25-013 used on 001P		001
-310A	A825400501-212		. . FILM-PROTECTIVE POST VSB A2-254-25-013 used on 001P		001

- ITEM NOT ILLUSTRATED

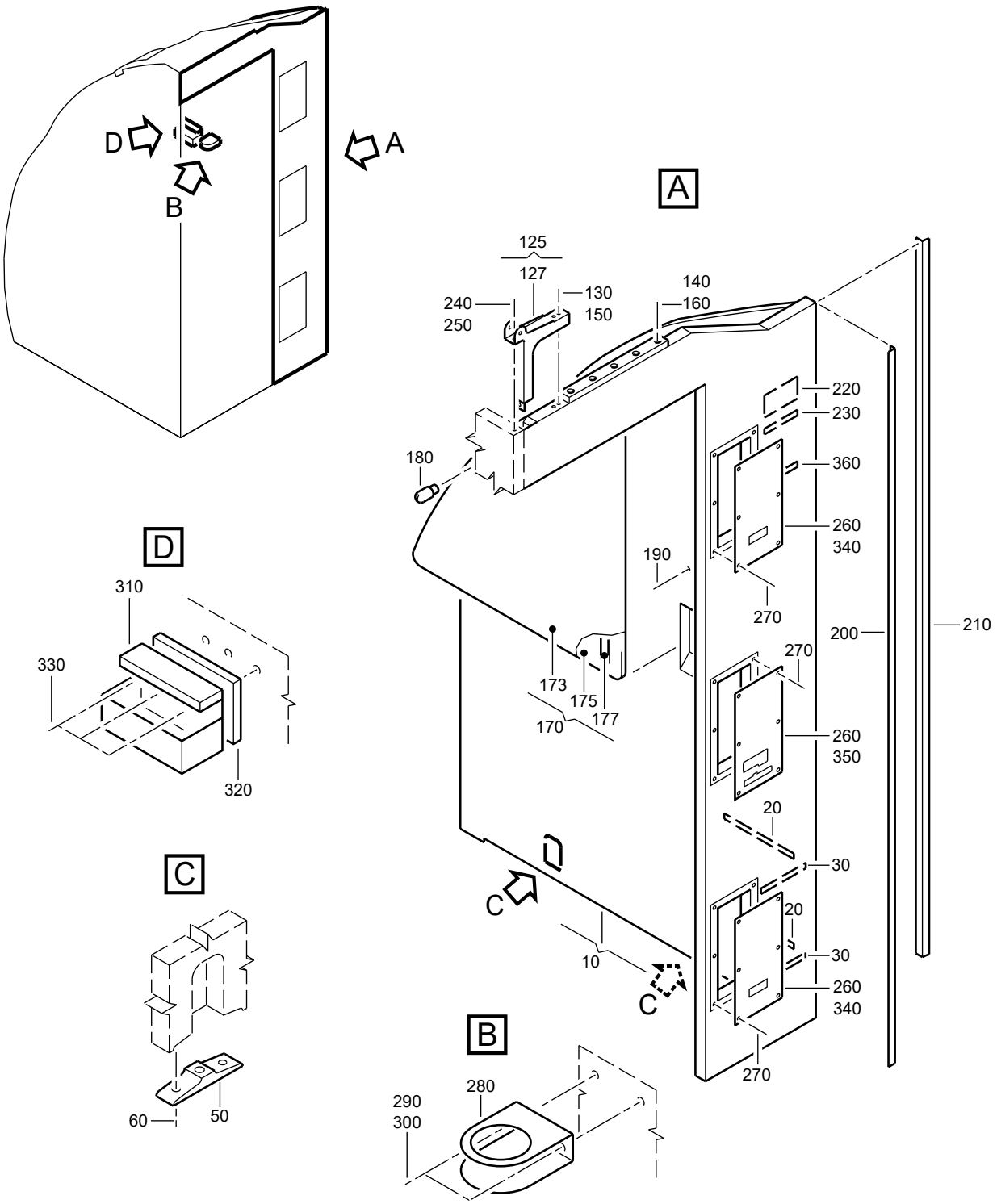

F_PL_254151_07_W_01_01

HOUSING
Figure 07W/EN254151SHEET07W01

FIG. ITEM	PART NUMBER	AIRLINE STOCK NUMBER	NOMENCLATURE 1234567		EFF CODE	UNITS PER ASSY
07W						
-001A	D2549020401266		. HOUSING used on 050F (25415142E), 050J (25415142H), 050G(25415142J), 050A (25415142L), 050G (25415142M), 050B(25415142P) SEE 25-41-51-42E FOR NHA SEE 25-41-51-42H FOR NHA SEE 25-41-51-42J FOR NHA SEE 25-41-51-42L FOR NHA SEE 25-41-51-42M FOR NHA SEE 25-41-51-42P FOR NHA	NP		RF
-001B	D2549030410266		. HOUSING used on 050H (25415142F), 050B (25415142T) SEE 25-41-51-42F FOR NHA SEE 25-41-51-42T FOR NHA	NP		RF
-001C	D2549020404066		. HOUSING used on 050J (25415142F), 050F (25415142J), 050E(25415142L), 050C (25415142M), 050D (25415142R) SEE 25-41-51-42F FOR NHA SEE 25-41-51-42J FOR NHA SEE 25-41-51-42L FOR NHA SEE 25-41-51-42M FOR NHA SEE 25-41-51-42R FOR NHA	NP		RF
-001D	D2549030410066		. HOUSING used on 050K (25415142F), 050D (25415142H), 050H(25415142U) SEE 25-41-51-42F FOR NHA SEE 25-41-51-42H FOR NHA SEE 25-41-51-42U FOR NHA	NP		RF

- ITEM NOT ILLUSTRATED

FIG. ITEM	PART NUMBER	AIRLINE STOCK NUMBER	NOMENCLATURE 1234567		EFF CODE	UNITS PER ASSY
-001E	D2549030409666		. HOUSING used on 050B (25415142G), 050D (25415142N), 050E (25415142S) SEE 25-41-51-42G FOR NHA SEE 25-41-51-42N FOR NHA SEE 25-41-51-42S FOR NHA	NP		RF
-001F	D2549040500666		. HOUSING used on 050C (25415142G) SEE 25-41-51-42G FOR NHA	NP		RF
-001G	D2549020400666		. HOUSING used on 050F (25415142G), 050A (25415142N), 050F (25415142S), 050H (25415142T) SEE 25-41-51-42G FOR NHA SEE 25-41-51-42N FOR NHA SEE 25-41-51-42S FOR NHA SEE 25-41-51-42T FOR NHA	NP		RF
-001H	D2549020400866		. HOUSING used on 050G (25415142G) SEE 25-41-51-42G FOR NHA	NP		RF
-001J	D2549020807266		. HOUSING used on 050G (25415142E) SEE 25-41-51-42E FOR NHA	NP		RF
-001K	D2549020402666		. HOUSING PRE VSB A2-254-25-130 used on 050H (25415142E), 050B (25415142J) SEE 25-41-51-42E FOR NHA SEE 25-41-51-42J FOR NHA	NP		RF
-001L	D2549030408666		. HOUSING used on 050H (25415142G) SEE 25-41-51-42G FOR NHA	NP		RF

- ITEM NOT ILLUSTRATED

FIG. ITEM	PART NUMBER	AIRLINE STOCK NUMBER	NOMENCLATURE 1234567	EFF CODE	UNITS PER ASSY
-001M	D2549020403466		. HOUSING NP used on 050J (25415142E), 050C (25415142P) SEE 25-41-51-42E FOR NHA SEE 25-41-51-42P FOR NHA		RF
-001N	D2547160900266		. HOUSING NP used on 050J (25415142J), 050A (25415142P) SEE 25-41-51-42J FOR NHA SEE 25-41-51-42P FOR NHA		RF
-001P	D2547161901866		. HOUSING NP POST SB 25-1672 used on 050N (25415142E) SEE 25-41-51-42E FOR NHA		RF
-001Q	R22540119606466		. HOUSING NP POST VSB A2-254-25-130 used on 050P (25415142E), 050K (25415142J) SEE 25-41-51-42E FOR NHA SEE 25-41-51-42J FOR NHA		RF
010A	A225401305-606		. . HOUSING ASSY PRE VSB A2-254-25-130 used on 001A, 001K		001
-010B	A225401305-626		. . HOUSING ASSY used on 001B		001
-010C	A225401305-616		. . HOUSING ASSY used on 001C, 001N		001
-010D	A225401305-622		. . HOUSING ASSY used on 001D		001
-010E	A225401305-614		. . HOUSING ASSY used on 001E		001

- ITEM NOT ILLUSTRATED

FIG. ITEM	PART NUMBER	AIRLINE STOCK NUMBER	NOMENCLATURE 1234567	EFF CODE	UNITS PER ASSY
-010F	A225401305-574		. . HOUSING ASSY used on 001F		001
-010G	A225401305-600		. . HOUSING ASSY used on 001G		001
-010H	A225401305-602		. . HOUSING ASSY used on 001H		001
-010J	A225401305-604		. . HOUSING ASSY used on 001J, 001P		001
-010K	A225401305-618		. . HOUSING ASSY used on 001M		001
-010L	A225401305-572		. . HOUSING ASSY used on 001L		001
-010M	A225401305-778		. . HOUSING ASSY POST VSB A2-254-25-130 used on 001Q		001
020A	0-112-0016-2000		. . . STRIP-SLIDING USE AS REQUIRED used on 010A, 010B, 010C, 010D, 010E, 010F, 010G, 010H, 010J, 010K, 010L, 010M		AR
030A	0-112-0015-2000		. . . STRIP-SLIDING USE AS REQUIRED used on 010A, 010B, 010C, 010D, 010E, 010F, 010G, 010H, 010J, 010K, 010L, 010M		AR
-040A	NSA935405-01		. . . MOUNT used on 010A, 010B, 010C, 010D, 010E, 010F, 010G, 010H, 010J, 010K, 010L, 010M		035

- ITEM NOT ILLUSTRATED

FIG. ITEM	PART NUMBER	AIRLINE STOCK NUMBER	NOMENCLATURE 1234567	EFF CODE	UNITS PER ASSY
050A	A225400232-208		. . . FITTING used on 010A, 010B, 010C, 010D, 010E, 010F, 010G, 010H, 010J, 010K, 010L, 010M		002
060A	ABS0704-6-50		. . . SCREW used on 010A, 010B, 010C, 010D, 010E, 010F, 010G, 010H, 010J, 010K, 010L, 010M		004
-070A	NAS1833C08-370		. . . INSERT USE AS REQUIRED POST SB 25-1448 used on 010A, 010B, 010C, 010D, 010E, 010F, 010G, 010H, 010J, 010K, 010L, 010M		AR
-080A	NAS1835C08		. . . INSERT used on 010A, 010B, 010C, 010D, 010E, 010F, 010G, 010H, 010J, 010K, 010L, 010M		018
-090A	NSA5345-06C		. . . INSERT used on 010A, 010B, 010C, 010D, 010E, 010F, 010G, 010H, 010J, 010K, 010L, 010M		004
-100A	NSA5345-08C		. . . INSERT used on 010A, 010B, 010C, 010D, 010E, 010F, 010G, 010H, 010J, 010K, 010L, 010M		003
-110A	EF1842-06C2		. . . INSERT used on 010A, 010B, 010C, 010D, 010E, 010F, 010G, 010H, 010J, 010K, 010L, 010M		004

- ITEM NOT ILLUSTRATED

FIG. ITEM	PART NUMBER	AIRLINE STOCK NUMBER	NOMENCLATURE 1234567	EFF CODE	UNITS PER ASSY
-120A	NSA5054-08		. . . INSERT used on 010A, 010B, 010C, 010D, 010E, 010F, 010G, 010H, 010J, 010K, 010L, 010M		004
125A	A225401239-004		. . . FITTING ASSY-UPR used on 010A, 010B, 010C, 010D, 010E, 010F, 010G, 010H, 010J, 010K, 010L, 010M		001
127A	A225401239-206		. . . . FITTING-UPR used on 125A		001
-128A	NSA5054-08		. . . . INSERT used on 125A		002
130A	NAS1096-2-8		. . . SCREW BUY PN NAS1801-08-8 used on 010A, 010B, 010C, 010D, 010E, 010F, 010G, 010H, 010J, 010K, 010L, 010M		002
140A	NAS1096-3-8		. . . SCREW BUY PN NAS1801-3-8 used on 010A, 010B, 010C, 010D, 010E, 010F, 010G, 010H, 010J, 010K, 010L, 010M		005
150A	NAS1149CN832R		. . . WASHER used on 010A, 010B, 010C, 010D, 010E, 010F, 010G, 010H, 010J, 010K, 010L, 010M		002
160A	NAS1149C0332R		. . . WASHER used on 010A, 010B, 010C, 010D, 010E, 010F, 010G, 010H, 010J, 010K, 010L, 010M		005

- ITEM NOT ILLUSTRATED

FIG. ITEM	PART NUMBER	AIRLINE STOCK NUMBER	NOMENCLATURE 1234567	EFF CODE	UNITS PER ASSY
170A	A2-254-0006-01		. . MIRROR-GLASS used on 001A, 001B, 001C, 001D, 001E, 001F, 001G, 001H, 001J, 001K, 001L, 001M, 001N, 001P		001
-170B	A225400470-000		. . MIRROR ASSY used on 001A, 001B, 001C, 001D, 001E, 001F, 001G, 001H, 001J, 001L, 001M, 001N, 001P, 001Q		001
173A	A225400470-200		. . . MIRROR used on 170B		001
175A	A2-254-0006A01		. . . PANEL-DOOR,MIRROR used on 170B		001
177A	SC0TCH4032-25		. . . FILM-ADHESIVE USE AS REQUIRED SC0TCHM0UNT4032-25 used on 170B		AR
180A	A225400451-200		. . STUD used on 001A, 001B, 001C, 001D, 001E, 001F, 001G, 001H, 001J, 001K, 001L, 001M, 001N, 001P, 001Q		001
190A	NAS1100-08-4		. . SCREW used on 001A, 001B, 001C, 001D, 001E, 001F, 001G, 001H, 001J, 001K, 001L, 001M, 001N, 001P, 001Q		003
200A	A225400224-212		. . SECTION used on 001A, 001B, 001C, 001D, 001E, 001F, 001G, 001H, 001J, 001K, 001L, 001M, 001N, 001P, 001Q		001

- ITEM NOT ILLUSTRATED

FIG. ITEM	PART NUMBER	AIRLINE STOCK NUMBER	NOMENCLATURE 1234567	EFF CODE	UNITS PER ASSY
210A	ABS0307A2-11		. . SECTION-SEALING USE AS REQUIRED BUY PN ABS0307AB2-11 used on 001A, 001B, 001C, 001D, 001E, 001F, 001G, 001H, 001J, 001K, 001L, 001M, 001N, 001P, 001Q		AR
220A	A225400500-200		. . PLACARD used on 001A, 001B, 001C, 001D, 001E, 001F, 001G, 001H, 001J, 001K, 001L, 001M, 001N, 001P, 001Q		001
230A	A225400500-202		. . PLACARD used on 001A, 001B, 001C, 001D, 001E, 001F, 001G, 001H, 001J, 001K, 001L, 001M, 001N, 001P, 001Q		001
240A	NAS1096-3-10		. . SCREW BUY PN NAS1801-3-10 used on 001A, 001B, 001C, 001D, 001E, 001F, 001G, 001H, 001J, 001K, 001L, 001M, 001N, 001P, 001Q		001
250A	NAS1149C0332R		. . WASHER used on 001A, 001B, 001C, 001D, 001E, 001F, 001G, 001H, 001J, 001K, 001L, 001M, 001N, 001P, 001Q		001
260A	D2528641100600		. . COVER-DECOR used on 001A, 001B, 001C, 001D, 001E, 001F, 001G, 001H, 001J, 001K, 001L, 001M, 001P, 001Q		003

- ITEM NOT ILLUSTRATED

FIG. ITEM	PART NUMBER	AIRLINE STOCK NUMBER	NOMENCLATURE 1234567	EFF CODE	UNITS PER ASSY
270A	NAS1102-04-6		. . SCREW used on 001A, 001B, 001C, 001D, 001E, 001F, 001G, 001H, 001J, 001K, 001L, 001M, 001N, 001P, 001Q		018
280A	4C255061-1		. . HOLDER-SOAP DISPENSER used on 001J, 001P	1E-431	001
290A	NAS1100-04-7		. . SCREW used on 001J, 001P		002
300A	NAS1149CN432R		. . WASHER used on 001J, 001P		002
310A	B0040418-21		. . HOLDER-COSMETICS used on 001J, 001P		001
320A	A325400472-204		. . SPACER used on 001J, 001P		001
330A	MS24693C52		. . SCREW used on 001J, 001P		003
340A	D2528641100600		. . COVER-DECOR used on 001N		002
350A	D2528641102000		. . COVER-DECOR POST SB 25-1400 used on 001N		001
360A	A225400500-204		. . PLACARD POST SB 25-1672 used on 001P		001

- ITEM NOT ILLUSTRATED

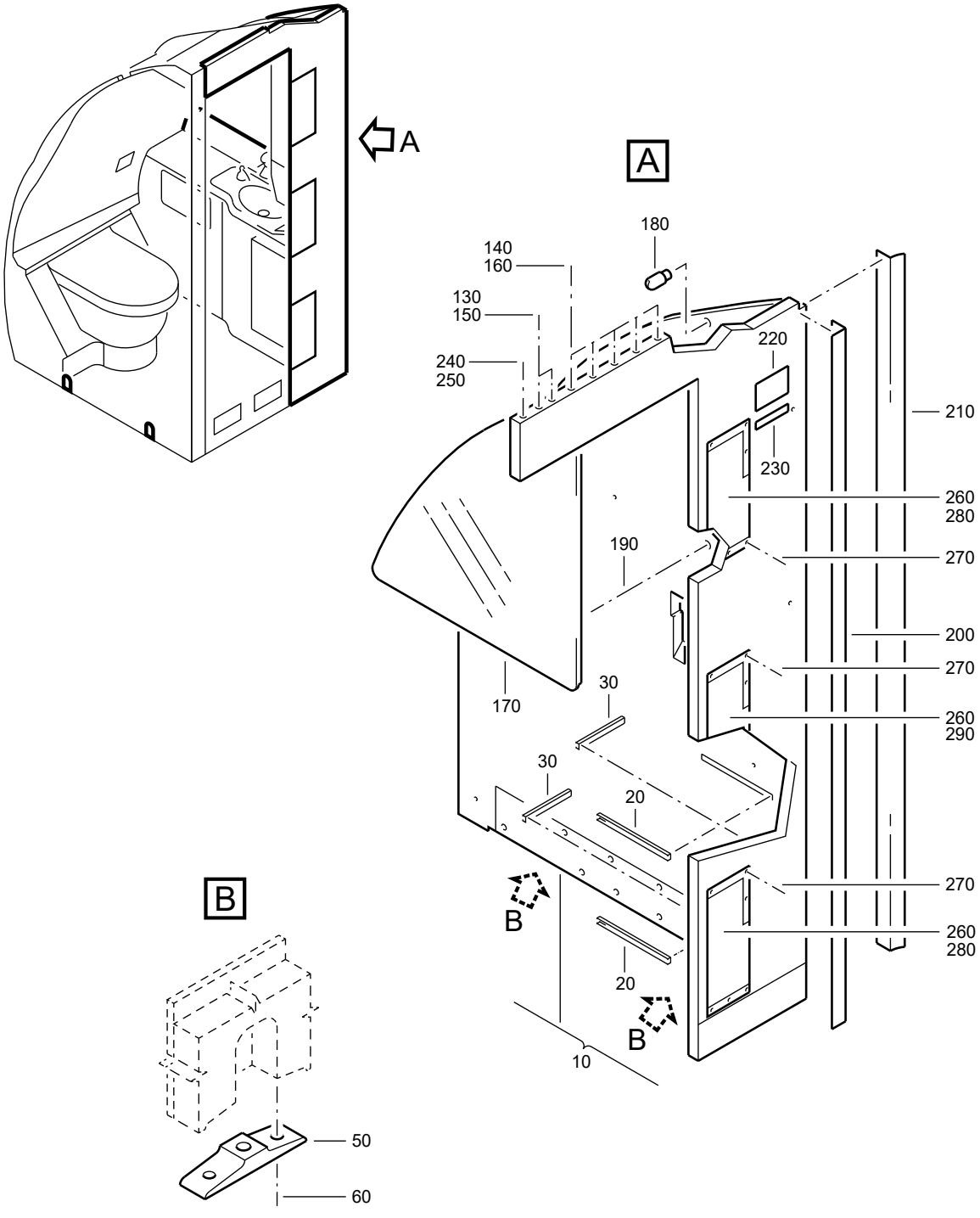

F_PL_254151_07_X_01_00

HOUSING
Figure 07X/EN254151SHEET07X01

FIG. ITEM	PART NUMBER	AIRLINE STOCK NUMBER	NOMENCLATURE 1234567	EFF CODE	UNITS PER ASSY
07X					
-001A	D2549030409066		. HOUSING NP used on 050K (25415142E) SEE 25-41-51-42E FOR NHA		RF
-001B	D2549020403066		. HOUSING NP used on 050L (25415142E) SEE 25-41-51-42E FOR NHA		RF
-001C	D2549020402266		. HOUSING NP used on 050J (25415142G), 050D (25415142J), 050G(25415142K) SEE 25-41-51-42G FOR NHA SEE 25-41-51-42J FOR NHA SEE 25-41-51-42K FOR NHA		RF
-001D	D2549020406666		. HOUSING NP used on 050D (25415142K), 050F (25415142T) SEE 25-41-51-42K FOR NHA SEE 25-41-51-42T FOR NHA		RF
-001E	D2549020403266		. HOUSING NP used on 050L (25415142G), 050G (25415142H), 050J (25415142L), 050M (25415142N) SEE 25-41-51-42G FOR NHA SEE 25-41-51-42H FOR NHA SEE 25-41-51-42L FOR NHA SEE 25-41-51-42N FOR NHA		RF
-001F	D2549010401866		. HOUSING NP used on 050K (25415142G) SEE 25-41-51-42G FOR NHA		RF
-001G	D2549030409466		. HOUSING NP used on 050A (25415142H) SEE 25-41-51-42H FOR NHA		RF

- ITEM NOT ILLUSTRATED

FIG. ITEM	PART NUMBER	AIRLINE STOCK NUMBER	NOMENCLATURE 1234567		EFF CODE	UNITS PER ASSY
-001H	D2549020406066		. HOUSING used on 050B (25415142H), 050B (25415142M), 050K (25415142Q) SEE 25-41-51-42H FOR NHA SEE 25-41-51-42M FOR NHA SEE 25-41-51-42Q FOR NHA	NP		RF
-001J	D2549010401066		. HOUSING used on 050C (25415142H), 050H (25415142M) SEE 25-41-51-42H FOR NHA SEE 25-41-51-42M FOR NHA	NP		RF
-001K	D2549040500466		. HOUSING used on 050E (25415142H), 050D (25415142M), 050L (25415142N), 050L (25415142Q), 050F (25415142R), 050D (25415142T), 050G (25415142U) SEE 25-41-51-42H FOR NHA SEE 25-41-51-42M FOR NHA SEE 25-41-51-42N FOR NHA SEE 25-41-51-42Q FOR NHA SEE 25-41-51-42R FOR NHA SEE 25-41-51-42T FOR NHA SEE 25-41-51-42U FOR NHA	NP		RF
-001L	D2549010402266		. HOUSING PRE VSB A2-254-25-106 used on 050F (25415142H), 050G (25415142L), 050A (25415142Q), 050M (25415142T) SEE 25-41-51-42H FOR NHA SEE 25-41-51-42L FOR NHA SEE 25-41-51-42Q FOR NHA SEE 25-41-51-42T FOR NHA	NP		RF

- ITEM NOT ILLUSTRATED

FIG. ITEM	PART NUMBER	AIRLINE STOCK NUMBER	NOMENCLATURE 1234567	EFF CODE	UNITS PER ASSY
-001M	D2549040500866		. HOUSING NP used on 050H (25415142H), 050J (25415142K), 050F(25415142M) SEE 25-41-51-42H FOR NHA SEE 25-41-51-42K FOR NHA SEE 25-41-51-42M FOR NHA		RF
-001N	D2549010401466		. HOUSING NP used on 050C (25415142J), 050H (25415142N), 050G(25415142P) SEE 25-41-51-42J FOR NHA SEE 25-41-51-42N FOR NHA SEE 25-41-51-42P FOR NHA		RF
-001P	R22540168900466		. HOUSING NP POST VSB A2-254-25-106 used on 050K (25415142L), 050N (25415142T) SEE 25-41-51-42L FOR NHA SEE 25-41-51-42T FOR NHA		RF
010A	A225401305-610		. . HOUSING ASSY used on 001A		001
-010B	A225401305-636		. . HOUSING ASSY used on 001B		001
-010C	A225401305-608		. . HOUSING ASSY used on 001C		001
-010D	A225401305-616		. . HOUSING ASSY used on 001D		001
-010E	A225401305-638		. . HOUSING ASSY used on 001E		001
-010F	A225401305-624		. . HOUSING ASSY used on 001F		001
-010G	A225401305-628		. . HOUSING ASSY used on 001G		001

- ITEM NOT ILLUSTRATED

FIG. ITEM	PART NUMBER	AIRLINE STOCK NUMBER	NOMENCLATURE 1234567	EFF CODE	UNITS PER ASSY
-010H	A225401305-640		. . HOUSING ASSY used on 001H		001
-010J	A225401305-632		. . HOUSING ASSY used on 001J		001
-010K	A225401305-620		. . HOUSING ASSY used on 001K		001
-010L	A225401305-634		. . HOUSING ASSY PRE VSB A2-254-25-106 used on 001L		001
-010M	A225401305-630		. . HOUSING ASSY used on 001M		001
-010N	A225401307-514		. . HOUSING ASSY POST VSB A2-254-25-106 used on 001P		001
020A	0-112-0016-2000		. . . STRIP-SLIDING USE AS REQUIRED used on 010A, 010B, 010C, 010D, 010E, 010F, 010G, 010H, 010J, 010K, 010L, 010M, 010N		AR
030A	0-112-0015-2000		. . . STRIP-SLIDING USE AS REQUIRED used on 010A, 010B, 010C, 010D, 010E, 010F, 010G, 010H, 010J, 010K, 010L, 010M, 010N		AR
-040A	NSA935405-01		. . . MOUNT used on 010A, 010B, 010C, 010D, 010E, 010F, 010G, 010H, 010J, 010K, 010L, 010M, 010N		035
050A	A225400232-208		. . . FITTING used on 010A, 010B, 010C, 010D, 010E, 010F, 010G, 010H, 010J, 010K, 010L, 010M, 010N		002

- ITEM NOT ILLUSTRATED

FIG. ITEM	PART NUMBER	AIRLINE STOCK NUMBER	NOMENCLATURE 1234567	EFF CODE	UNITS PER ASSY
060A	ABS0704-6-50		. . . SCREW used on 010A, 010B, 010C, 010D, 010E, 010F, 010G, 010H, 010J, 010K, 010L, 010M, 010N		004
-070A	NAS1833C08-370		. . . INSERT used on 010A, 010B, 010C, 010D, 010E, 010F, 010G, 010H, 010J, 010K, 010L, 010M, 010N		094
-080A	NAS1835C08		. . . INSERT used on 010A, 010B, 010C, 010D, 010E, 010F, 010G, 010H, 010J, 010K, 010L, 010M, 010N		018
-090A	NSA5345-06C		. . . INSERT used on 010A, 010B, 010C, 010D, 010E, 010F, 010G, 010H, 010J, 010K, 010L, 010M, 010N		004
-100A	NSA5345-08C		. . . INSERT used on 010A, 010B, 010C, 010D, 010E, 010F, 010G, 010H, 010J, 010K, 010L, 010M, 010N		003
-110A	EF1842-06C2		. . . INSERT used on 010A, 010B, 010C, 010D, 010E, 010F, 010G, 010H, 010J, 010K, 010L, 010M, 010N		004
-120A	NSA5054-08		. . . INSERT used on 010A, 010B, 010C, 010D, 010E, 010F, 010G, 010H, 010J, 010K, 010L, 010M, 010N		004
130A	NAS1096-2-8		. . . SCREW BUY PN NAS1801-08-8 used on 010A, 010B, 010C, 010D, 010E, 010F, 010G, 010H, 010J, 010K, 010L, 010M, 010N		002

- ITEM NOT ILLUSTRATED

FIG. ITEM	PART NUMBER	AIRLINE STOCK NUMBER	NOMENCLATURE 1234567	EFF CODE	UNITS PER ASSY
140A	NAS1096-3-8		. . . SCREW BUY PN NAS1801-3-8 used on 010A, 010B, 010C, 010D, 010E, 010F, 010G, 010H, 010J, 010K, 010L, 010M, 010N		005
150A	NAS1149CN832R		. . . WASHER used on 010A, 010B, 010C, 010D, 010E, 010F, 010G, 010H, 010J, 010K, 010L, 010M, 010N		002
160A	NAS1149C0332R		. . . WASHER used on 010A, 010B, 010C, 010D, 010E, 010F, 010G, 010H, 010J, 010K, 010L, 010M, 010N		005
170A	A2-254-0006-01		. . MIRROR-GLASS used on 001A, 001B, 001C, 001D, 001E, 001F, 001G, 001H, 001J, 001K, 001L, 001M, 001N, 001P		001
180A	A225400451-200		. . STUD used on 001A, 001B, 001C, 001D, 001E, 001F, 001G, 001H, 001J, 001K, 001L, 001M, 001N, 001P		001
190A	NAS1100-08-4		. . SCREW PRE VSB A2-254-25-106 used on 001A, 001B, 001C, 001D, 001E, 001F, 001G, 001H, 001J, 001K, 001L, 001M, 001N		003
-190B	NAS1100-08-5		. . SCREW POST VSB A2-254-25-106 used on 001P		003

- ITEM NOT ILLUSTRATED

FIG. ITEM	PART NUMBER	AIRLINE STOCK NUMBER	NOMENCLATURE 1234567	EFF CODE	UNITS PER ASSY
200A	A225400224-212		. . SECTION used on 001A, 001B, 001C, 001D, 001E, 001F, 001G, 001H, 001J, 001K, 001L, 001M, 001N, 001P		001
210A	ABS0307A2-11		. . SECTION-SEALING USE AS REQUIRED BUY PN ABS0307AB2-11 used on 001A, 001B, 001C, 001D, 001E, 001F, 001G, 001H, 001J, 001K, 001L, 001M, 001N, 001P		AR
220A	A225400500-200		. . PLACARD used on 001A, 001B, 001C, 001D, 001E, 001F, 001G, 001H, 001J, 001K, 001L, 001M, 001N, 001P		001
230A	A225400500-202		. . PLACARD used on 001A, 001B, 001C, 001D, 001E, 001F, 001G, 001H, 001J, 001K, 001L, 001M, 001N, 001P		001
240A	NAS1096-3-10		. . SCREW BUY PN NAS1801-3-10 used on 001A, 001B, 001C, 001D, 001E, 001F, 001G, 001H, 001J, 001K, 001L, 001M, 001N, 001P		001
250A	NAS1149C0332R		. . WASHER used on 001A, 001B, 001C, 001D, 001E, 001F, 001G, 001H, 001J, 001K, 001L, 001M, 001N, 001P		001

- ITEM NOT ILLUSTRATED

FIG. ITEM	PART NUMBER	AIRLINE STOCK NUMBER	NOMENCLATURE 1234567	EFF CODE	UNITS PER ASSY
260A	D2528641100600		. . COVER-DECOR used on 001A, 001B, 001C, 001D, 001E, 001F, 001G, 001H, 001J, 001K, 001L, 001M, 001P		003
270A	NAS1102-04-6		. . SCREW used on 001A, 001B, 001C, 001D, 001E, 001F, 001G, 001H, 001J, 001K, 001L, 001M, 001N, 001P		018
280A	D2528641100600		. . COVER-DECOR used on 001N		002
290A	D2528641102000		. . COVER-DECOR POST SB 25-1400 used on 001N		001

- ITEM NOT ILLUSTRATED

THIS PAGE IS INTENTIONALLY LEFT BLANK

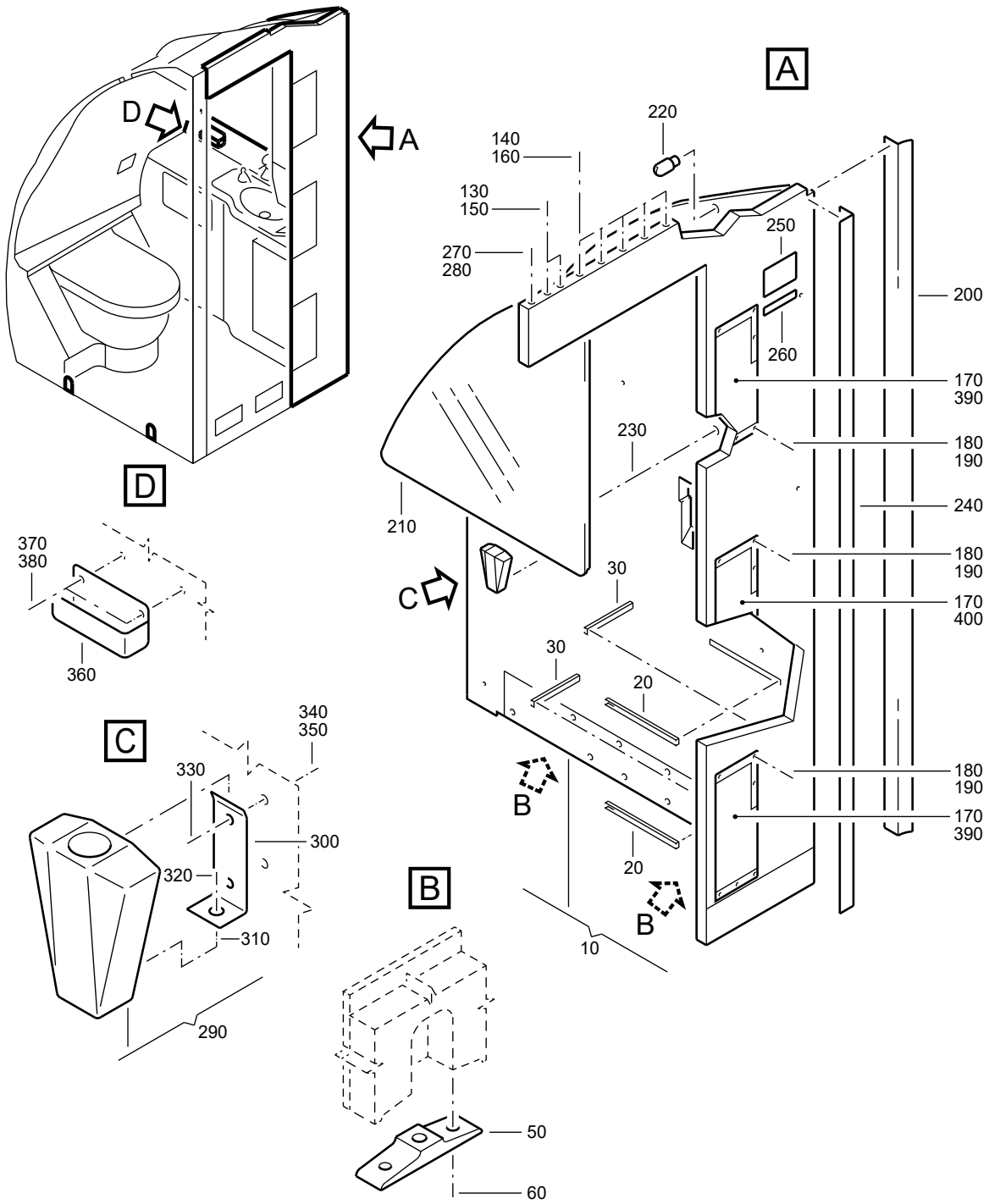

F_PL_254151_07_Y_01_00

HOUSING
Figure 07Y/EN254151SHEET07Y01

FIG. ITEM	PART NUMBER	AIRLINE STOCK NUMBER	NOMENCLATURE 1234567		EFF CODE	UNITS PER ASSY
07Y						
-001A	D2549010501066		. HOUSING used on 050J (25415101B), 050K (25415101C), 050K(25415101F), 050J (25415101G), 050C (25415101H), 050C(25415101J), 050K (25415101K), 050A (25415101L), 050C(25415101Q), 050L (25415101X) SEE 25-41-51-01B FOR NHA SEE 25-41-51-01C FOR NHA SEE 25-41-51-01F FOR NHA SEE 25-41-51-01G FOR NHA SEE 25-41-51-01H FOR NHA SEE 25-41-51-01J FOR NHA SEE 25-41-51-01K FOR NHA SEE 25-41-51-01L FOR NHA SEE 25-41-51-01Q FOR NHA SEE 25-41-51-01X FOR NHA	NP		RF
-001B	D2549010504466		. HOUSING used on 050D (25415101B), 050D (25415101C), 050C (25415101D), 050D (25415101F), 050F (25415101G), 050E (25415101H) SEE 25-41-51-01B FOR NHA SEE 25-41-51-01C FOR NHA SEE 25-41-51-01D FOR NHA SEE 25-41-51-01F FOR NHA SEE 25-41-51-01G FOR NHA SEE 25-41-51-01H FOR NHA	NP		RF

- ITEM NOT ILLUSTRATED

FIG. ITEM	PART NUMBER	AIRLINE STOCK NUMBER	NOMENCLATURE 1234567	EFF CODE	UNITS PER ASSY
-001C	D2549020503666		. HOUSING NP PRE VSB A2-254-25-059 used on 050E (25415101C), 050E (25415101E), 050A (25415101F), 050G (25415101H), 050J (25415101K), 050H(25415101M) SEE 25-41-51-01C FOR NHA SEE 25-41-51-01E FOR NHA SEE 25-41-51-01F FOR NHA SEE 25-41-51-01H FOR NHA SEE 25-41-51-01K FOR NHA SEE 25-41-51-01M FOR NHA		RF
-001D	D2549020601066		. HOUSING NP used on 050F (25415101F) SEE 25-41-51-01F FOR NHA		RF
-001E	D2549030503466		. HOUSING NP used on 050L (25415101F), 050D (25415101G) SEE 25-41-51-01F FOR NHA SEE 25-41-51-01G FOR NHA		RF

- ITEM NOT ILLUSTRATED

FIG. ITEM	PART NUMBER	AIRLINE STOCK NUMBER	NOMENCLATURE 1234567		EFF CODE	UNITS PER ASSY
-001F	D2549020607066		. HOUSING used on 050E (25415101J), 050C (25415101K), 050C(25415101M), 050B (25415101N), 050J (25415101P), 050E(25415101Q), 050K (25415101T), 050D (25415101V), 050A(25415101W), 050E (25415101X), 050J (25415101Y), 050A(25415101Z), 050A (254151410), 050B (25415141C), 050D(25415141D), 050C (25415141F), 050J (25415141J) SEE 25-41-51-01J FOR NHA SEE 25-41-51-01K FOR NHA SEE 25-41-51-01M FOR NHA SEE 25-41-51-01N FOR NHA SEE 25-41-51-01P FOR NHA SEE 25-41-51-01Q FOR NHA SEE 25-41-51-01T FOR NHA SEE 25-41-51-01V FOR NHA SEE 25-41-51-01W FOR NHA SEE 25-41-51-01X FOR NHA SEE 25-41-51-01Y FOR NHA SEE 25-41-51-01Z FOR NHA SEE 25-41-51-410 FOR NHA SEE 25-41-51-41C FOR NHA SEE 25-41-51-41D FOR NHA SEE 25-41-51-41F FOR NHA SEE 25-41-51-41J FOR NHA	NP		RF
-001G	D2549010514266		. HOUSING used on 050H (25415101T) SEE 25-41-51-01T FOR NHA	NP		RF
-001H	D2549020711666		. HOUSING used on 050F (25415141N), 050C (25415141S) SEE 25-41-51-41N FOR NHA SEE 25-41-51-41S FOR NHA	NP		RF

- ITEM NOT ILLUSTRATED

FIG. ITEM	PART NUMBER	AIRLINE STOCK NUMBER	NOMENCLATURE 1234567		EFF CODE	UNITS PER ASSY
-001J	D2549020700466		. HOUSING used on 050K (25415101W), 050J (25415101Z), 050H (25415141K) SEE 25-41-51-01W FOR NHA SEE 25-41-51-01Z FOR NHA SEE 25-41-51-41K FOR NHA	NP		RF
-001K	D2549010504866		. HOUSING used on 050L (25415101C) SEE 25-41-51-01C FOR NHA	NP		RF
-001L	D2549020603266		. HOUSING PRE VSB A2-254-25-032 used on 050H (25415101L) SEE 25-41-51-01L FOR NHA	NP		RF
-001M	D2549020800066		. HOUSING PRE VSB A2-254-25-013 used on 050D (25415141P), 050G (25415141R) SEE 25-41-51-41P FOR NHA SEE 25-41-51-41R FOR NHA	NP		RF
-001N	D2549010501066		. HOUSING POST SB 25-1314 used on 050K (25415101H), 050K (25415101L), 050E (25415141T) SEE 25-41-51-01H FOR NHA SEE 25-41-51-01L FOR NHA SEE 25-41-51-41T FOR NHA	NP		RF
-001P	D2549020800066		. HOUSING POST VSB A2-254-25-013 used on 050K (25415141P) SEE 25-41-51-41P FOR NHA	NP		RF

- ITEM NOT ILLUSTRATED

FIG. ITEM	PART NUMBER	AIRLINE STOCK NUMBER	NOMENCLATURE 1234567	EFF CODE	UNITS PER ASSY
-001Q	D2549020603266		. HOUSING NP POST VSB A2-254-25-032 used on 050M (25415101L) SEE 25-41-51-01L FOR NHA		RF
-001R	R22540113300066		. HOUSING NP POST VSB A2-254-25-059 used on 050M (25415101F) SEE 25-41-51-01F FOR NHA		RF
010A	A225491300-500		. . HOUSING ASSY POST SB 25-1287 used on 001A		001
-010B	A225491305-504		. . HOUSING ASSY POST SB 25-1305 POST SB 25-1314 used on 001B, 001C, 001D		001
-010C	A225491305-624		. . HOUSING ASSY POST SB 25-1305 used on 001E		001
-010D	A225491305-570		. . HOUSING ASSY POST SB 25-1305 used on 001F		001
-010E	A2254013028532		. . HOUSING ASSY POST SB 25-1305 POST SB 25-1314 used on 001G		001
-010F	A225491305-622		. . HOUSING ASSY POST SB 25-1305 used on 001H		001
-010G	A2254013028500		. . HOUSING ASSY POST SB 25-1314 used on 001J		001

- ITEM NOT ILLUSTRATED

FIG. ITEM	PART NUMBER	AIRLINE STOCK NUMBER	NOMENCLATURE 1234567	EFF CODE	UNITS PER ASSY
-010H	A2254013018508		. . HOUSING ASSY POST SB 25-1314 used on 001K		001
-010J	A225401305-722		. . HOUSING ASSY POST SB 25-1314 PRE VSB A2-254-25-032 used on 001L		001
-010K	A2254013038500		. . HOUSING ASSY POST SB 25-1314 used on 001M, 001P		001
-010L	A2254013078500		. . HOUSING ASSY POST SB 25-1314 used on 001N		001
-010M	A2254013019722		. . HOUSING ASSY POST VSB A2-254-25-032 used on 001Q		001
-010N	A225401301-706		. . HOUSING ASSY POST VSB A2-254-25-059 used on 001R		001
020A	0-112-0016-2000		. . . STRIP-SLIDING USE AS REQUIRED used on 010A, 010B, 010C, 010D, 010E, 010F, 010G, 010H, 010J, 010K, 010L, 010M, 010N		AR
030A	0-112-0015-2000		. . . STRIP-SLIDING USE AS REQUIRED used on 010A, 010B, 010C, 010D, 010E, 010F, 010G, 010H, 010J, 010K, 010L, 010M, 010N		AR

- ITEM NOT ILLUSTRATED

FIG. ITEM	PART NUMBER	AIRLINE STOCK NUMBER	NOMENCLATURE 1234567	EFF CODE	UNITS PER ASSY
-040A	NSA935405-01		. . . MOUNT used on 010A, 010B, 010C, 010D, 010E, 010F, 010G, 010H, 010J, 010K, 010L, 010M, 010N		035
050A	A225400232-208		. . . FITTING used on 010A, 010B, 010C, 010D, 010E, 010F, 010G, 010H, 010J, 010K, 010L, 010M, 010N		002
060A	ABS0704-6-50		. . . SCREW used on 010A, 010B, 010C, 010D, 010E, 010F, 010G, 010H, 010J, 010K, 010L, 010M, 010N		004
-070A	NAS1833C08-370		. . . INSERT used on 010A, 010B, 010C, 010D, 010E, 010F, 010G, 010H, 010J, 010K, 010L, 010M, 010N		116
-080A	NAS1835C08		. . . INSERT used on 010A, 010B, 010C, 010D, 010E, 010F, 010G, 010H, 010J, 010K, 010L, 010M, 010N		020
-090A	NSA5345-06C		. . . INSERT used on 010A, 010B, 010C, 010D, 010E, 010F, 010G, 010H, 010J, 010K, 010L, 010M, 010N		004
-100A	NSA5345-08C		. . . INSERT used on 010A, 010B, 010C, 010D, 010E, 010F, 010G, 010H, 010J, 010K, 010L, 010M, 010N		003
-110A	EF1842-06C2		. . . INSERT used on 010A, 010B, 010C, 010D, 010E, 010F, 010G, 010H, 010J, 010K, 010L, 010M, 010N		004

- ITEM NOT ILLUSTRATED

FIG. ITEM	PART NUMBER	AIRLINE STOCK NUMBER	NOMENCLATURE 1234567	EFF CODE	UNITS PER ASSY
-120A	NSA5054-08		. . . INSERT used on 010A, 010B, 010C, 010D, 010E, 010F, 010G, 010H, 010J, 010K, 010L, 010M, 010N		001
130A	NAS1096-2-8		. . . SCREW BUY PN NAS1801-08-8 used on 010A, 010B, 010C, 010D, 010E, 010F, 010G, 010H, 010J, 010K, 010L, 010M, 010N		002
140A	NAS1096-3-8		. . . SCREW BUY PN NAS1801-3-8 used on 010A, 010B, 010C, 010D, 010E, 010F, 010G, 010H, 010J, 010K, 010L, 010M, 010N		005
150A	NAS1149CN832R		. . . WASHER used on 010A, 010B, 010C, 010D, 010E, 010F, 010G, 010H, 010J, 010K, 010L, 010M, 010N		002
160A	NAS1149C0332R		. . . WASHER used on 010A, 010B, 010C, 010D, 010E, 010F, 010G, 010H, 010J, 010K, 010L, 010M, 010N		005
170A	D2528641100600		. . . COVER-DECOR used on 010A, 010B, 010C, 010D, 010E, 010F, 010G, 010J, 010K, 010L, 010M, 010N		003
180A	NAS1102-04-6		. . . SCREW used on 010A, 010B, 010C, 010D, 010E, 010F, 010G, 010H, 010J, 010K, 010L, 010M, 010N		018

- ITEM NOT ILLUSTRATED

FIG. ITEM	PART NUMBER	AIRLINE STOCK NUMBER	NOMENCLATURE 1234567	EFF CODE	UNITS PER ASSY
190A	NAS1102-08-14		. . . SCREW used on 010A, 010B, 010C, 010D, 010E, 010F, 010G, 010H, 010J, 010K, 010L, 010M, 010N		018
200A	ABS0307A2-11		. . . SECTION-SEALING USE AS REQUIRED BUY PN ABS0307AB2-11 used on 010A, 010B, 010C, 010D, 010E, 010F, 010G, 010H, 010J, 010K, 010L, 010M, 010N		AR
210A	A2-254-0006-01		. . MIRROR-GLASS used on 001A, 001B, 001C, 001D, 001E, 001F, 001G, 001H, 001J, 001K, 001L, 001M, 001N, 001P, 001Q, 001R		001
220A	A225400451-200		. . STUD used on 001A, 001B, 001C, 001D, 001E, 001F, 001G, 001H, 001J, 001K, 001L, 001M, 001N, 001P, 001Q, 001R		001
230A	NAS1100-08-4		. . SCREW used on 001A, 001B, 001C, 001D, 001E, 001F, 001G, 001H, 001J, 001K, 001L, 001M, 001N, 001P, 001Q, 001R		003
240A	A225400224-212		. . SECTION used on 001A, 001B, 001C, 001D, 001E, 001F, 001G, 001H, 001J, 001K, 001L, 001M, 001N, 001P, 001Q, 001R		001

- ITEM NOT ILLUSTRATED

FIG. ITEM	PART NUMBER	AIRLINE STOCK NUMBER	NOMENCLATURE 1234567	EFF CODE	UNITS PER ASSY
250A	A225400500-200		. . PLACARD used on 001A, 001B, 001C, 001D, 001E, 001F, 001G, 001H, 001J, 001K, 001L, 001M, 001N, 001P, 001Q, 001R		001
260A	A225400500-202		. . PLACARD used on 001A, 001B, 001C, 001D, 001E, 001F, 001G, 001H, 001J, 001K, 001L, 001M, 001N, 001P, 001Q, 001R		001
270A	NAS1096-3-10		. . SCREW BUY PN NAS1801-3-10 used on 001A, 001B, 001C, 001D, 001E, 001F, 001G, 001H, 001J, 001K, 001L, 001M, 001N, 001P, 001Q, 001R		001
280A	NAS1149C0332R		. . WASHER used on 001A, 001B, 001C, 001D, 001E, 001F, 001G, 001H, 001J, 001K, 001L, 001M, 001N, 001P, 001Q, 001R		001
290A	A225400453-000		. . VASE-FLOWER used on 001C, 001R		001
300A	A225400453-202		. . . BRACKET used on 290A		001
310A	NSA5067-08-1		. . . NUT used on 290A		001
320A	NAS1096-2-14		. . . SCREW BUY PN NAS1801-08-14 used on 290A		001
330A	MS24693C48		. . SCREW used on 001C, 001R		002

- ITEM NOT ILLUSTRATED

FIG. ITEM	PART NUMBER	AIRLINE STOCK NUMBER	NOMENCLATURE 1234567	EFF CODE	UNITS PER ASSY
340A	AN960C8		. . WASHER BUY PN NAS1149CN832R used on 001C, 001R		002
350A	MS21042-08		. . NUT used on 001C, 001R		002
360A	1240-52		. . HOLDER-COSMETICS used on 001D		001
370A	NAS514P832-6		. . SCREW used on 001D		002
380A	AN960C8		. . WASHER BUY PN NAS1149CN832R used on 001D		002
390A	D2528641100600		. . COVER-DECOR used on 001G, 001K		002
400A	D2528641102200		. . COVER-DECOR POST SB 25-1473 used on 001G, 001K		001

- ITEM NOT ILLUSTRATED

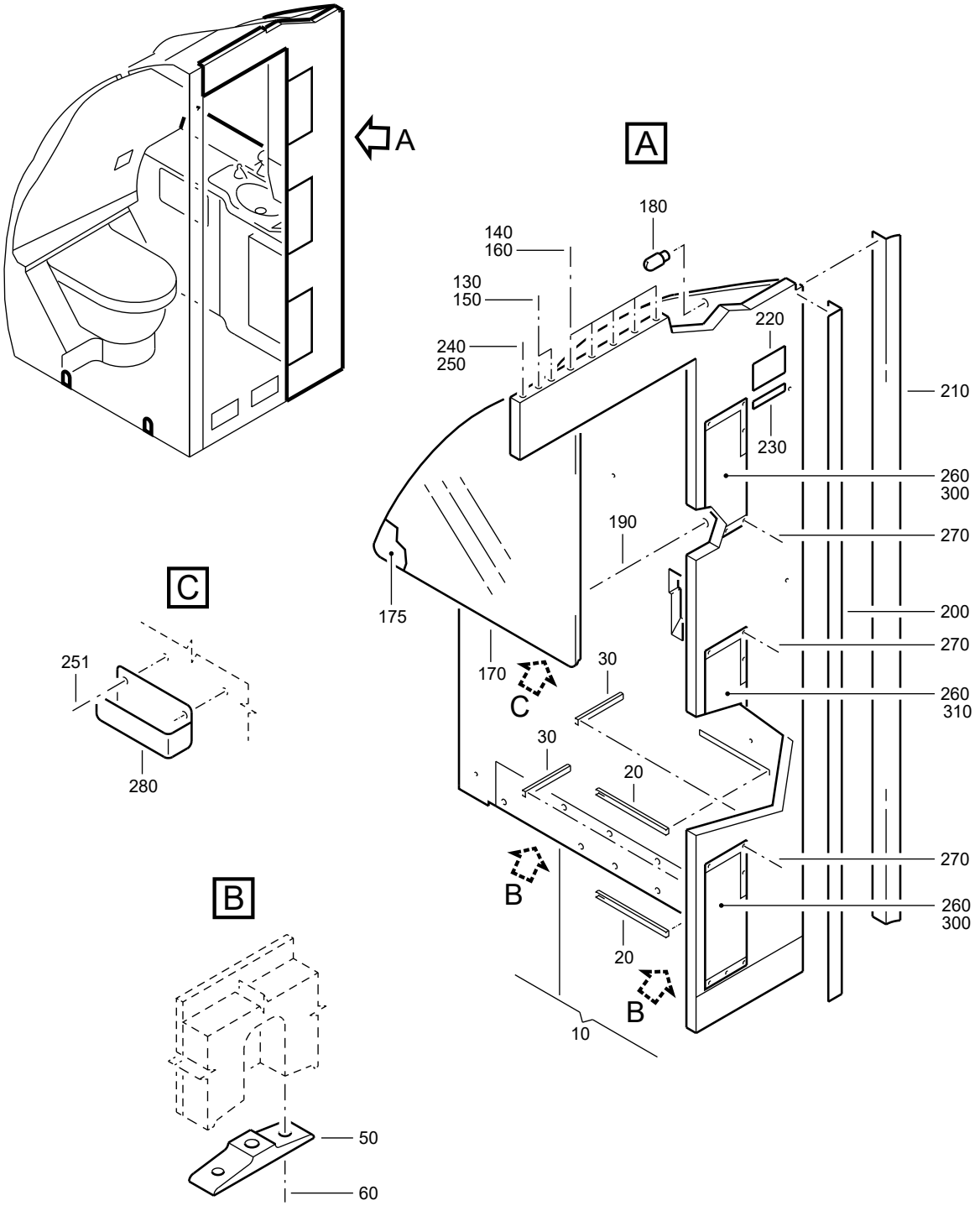

F_PL_254151_07_Z_01_00

HOUSING
Figure 07Z/EN254151SHEET07Z01

FIG. ITEM	PART NUMBER	AIRLINE STOCK NUMBER	NOMENCLATURE 1234567		EFF CODE	UNITS PER ASSY
07Z						
-001A	D2549020402066		. HOUSING used on 050A (25415142J), 050C (25415142L), 050J(25415142N), 050H (25415142R), 050J (25415142S), 050K(25415142T) SEE 25-41-51-42J FOR NHA SEE 25-41-51-42L FOR NHA SEE 25-41-51-42N FOR NHA SEE 25-41-51-42R FOR NHA SEE 25-41-51-42S FOR NHA SEE 25-41-51-42T FOR NHA	NP		RF
-001B	D2549020401666		. HOUSING used on 050K (25415142H) SEE 25-41-51-42H FOR NHA	NP		RF
-001C	D2549020406866		. HOUSING used on 050A (25415142K) SEE 25-41-51-42K FOR NHA	NP		RF
-001D	D2549030410666		. HOUSING used on 050B (25415142K) SEE 25-41-51-42K FOR NHA	NP		RF
-001E	D2549020408866		. HOUSING used on 050C (25415142K) SEE 25-41-51-42K FOR NHA	NP		RF
-001F	D2549020408266		. HOUSING used on 050F (25415142K) SEE 25-41-51-42K FOR NHA	NP		RF
-001G	D2549030410866		. HOUSING used on 050H (25415142K), 050H (25415142L) SEE 25-41-51-42K FOR NHA SEE 25-41-51-42L FOR NHA	NP		RF

- ITEM NOT ILLUSTRATED

FIG. ITEM	PART NUMBER	AIRLINE STOCK NUMBER	NOMENCLATURE 1234567	EFF CODE	UNITS PER ASSY
-001H	D2549010403266		. HOUSING NP used on 050M (25415142E), 050H (25415142J), 050K (25415142K), 050B (25415142N), 050L (25415142R) SEE 25-41-51-42E FOR NHA SEE 25-41-51-42J FOR NHA SEE 25-41-51-42K FOR NHA SEE 25-41-51-42N FOR NHA SEE 25-41-51-42R FOR NHA		RF
-001J	D2549020401466		. HOUSING NP used on 050L (25415142K), 050D (25415142S) SEE 25-41-51-42K FOR NHA SEE 25-41-51-42S FOR NHA		RF
-001K	D2549020402466		. HOUSING NP used on 050B (25415142L) SEE 25-41-51-42L FOR NHA		RF
-001L	D2549030412266		. HOUSING NP used on 050D (25415142L), 050H (25415142S) SEE 25-41-51-42L FOR NHA SEE 25-41-51-42S FOR NHA		RF
-001M	D2549020409266		. HOUSING NP used on 050F (25415142L), 050C (25415142U) SEE 25-41-51-42L FOR NHA SEE 25-41-51-42U FOR NHA		RF
-001N	D2549010500066		. HOUSING NP POST SB 25-1400 used on 050J (25415142P) SEE 25-41-51-42P FOR NHA		RF
010A	A225401305-644		. . HOUSING ASSY used on 001A, 001N		001

- ITEM NOT ILLUSTRATED

FIG. ITEM	PART NUMBER	AIRLINE STOCK NUMBER	NOMENCLATURE 1234567	EFF CODE	UNITS PER ASSY
-010B	A225401305-648		. . HOUSING ASSY used on 001B, 001F		001
-010C	A225401305-652		. . HOUSING ASSY used on 001C		001
-010D	A225401305-754		. . HOUSING ASSY POST SB 25-1482 used on 001D		001
-010E	A225401305-654		. . HOUSING ASSY used on 001E		001
-010F	A225401305-646		. . HOUSING ASSY used on 001G		001
-010G	A225401305-612		. . HOUSING ASSY used on 001H		001
-010H	A225401305-658		. . HOUSING ASSY used on 001J		001
-010J	A225401305-660		. . HOUSING ASSY used on 001K		001
-010K	A225401305-656		. . HOUSING ASSY used on 001L		001
-010L	A225401305-666		. . HOUSING ASSY used on 001M		001
020A	0-112-0016-2000		. . . STRIP-SLIDING USE AS REQUIRED used on 010A, 010B, 010C, 010D, 010E, 010F, 010G, 010H, 010J, 010K, 010L		AR

- ITEM NOT ILLUSTRATED

FIG. ITEM	PART NUMBER	AIRLINE STOCK NUMBER	NOMENCLATURE 1234567	EFF CODE	UNITS PER ASSY
030A	0-112-0015-2000		. . . STRIP-SLIDING USE AS REQUIRED used on 010A, 010B, 010C, 010D, 010E, 010F, 010G, 010H, 010J, 010K, 010L		AR
-040A	NSA935405-01		. . . MOUNT used on 010A, 010B, 010C, 010D, 010E, 010F, 010G, 010H, 010J, 010K, 010L		035
050A	A225400232-208		. . . FITTING used on 010A, 010B, 010C, 010D, 010E, 010F, 010G, 010H, 010J, 010K, 010L		002
060A	ABS0704-6-50		. . . SCREW used on 010A, 010B, 010C, 010D, 010E, 010F, 010G, 010H, 010J, 010K, 010L		004
-070A	NAS1833C08-370		. . . INSERT used on 010A, 010B, 010C, 010D, 010E, 010F, 010G, 010H, 010J, 010K, 010L		094
-080A	NAS1835C08		. . . INSERT used on 010A, 010B, 010C, 010D, 010E, 010F, 010G, 010H, 010J, 010K, 010L		018
-090A	NSA5345-06C		. . . INSERT used on 010A, 010B, 010C, 010D, 010E, 010F, 010G, 010H, 010J, 010K, 010L		004
-100A	NSA5345-08C		. . . INSERT used on 010A, 010B, 010C, 010D, 010E, 010F, 010G, 010H, 010J, 010K, 010L		003

- ITEM NOT ILLUSTRATED

FIG. ITEM	PART NUMBER	AIRLINE STOCK NUMBER	NOMENCLATURE 1234567	EFF CODE	UNITS PER ASSY
-110A	EF1842-06C2		. . . INSERT used on 010A, 010B, 010C, 010D, 010E, 010F, 010G, 010H, 010J, 010K, 010L		004
-120A	NSA5054-08		. . . INSERT used on 010A, 010B, 010C, 010D, 010E, 010F, 010G, 010H, 010J, 010K, 010L		004
130A	NAS1096-2-8		. . . SCREW BUY PN NAS1801-08-8 used on 010A, 010B, 010C, 010D, 010E, 010F, 010G, 010H, 010J, 010K, 010L		002
140A	NAS1096-3-8		. . . SCREW BUY PN NAS1801-3-8 used on 010A, 010B, 010C, 010D, 010E, 010F, 010G, 010H, 010J, 010K, 010L		005
150A	NAS1149CN832R		. . . WASHER used on 010A, 010B, 010C, 010D, 010E, 010F, 010G, 010H, 010J, 010K, 010L		002
151A	NAS1149CN832R		. . WASHER used on 001F		002
160A	NAS1149C0332R		. . . WASHER used on 151A		005
170A	A2-254-0006-01		. . MIRROR-GLASS used on 001A, 001B, 001C, 001D, 001E, 001F, 001G, 001H, 001J, 001K, 001L, 001M, 001N		001
175A	120801		. . FOIL-SHADING,MIRROR used on 001G		001

- ITEM NOT ILLUSTRATED

FIG. ITEM	PART NUMBER	AIRLINE STOCK NUMBER	NOMENCLATURE 1234567	EFF CODE	UNITS PER ASSY
180A	A225400451-200		. . STUD used on 001A, 001B, 001C, 001D, 001E, 001F, 001G, 001H, 001J, 001K, 001L, 001M, 001N		001
190A	NAS1100-08-4		. . SCREW used on 001A, 001B, 001C, 001D, 001E, 001F, 001G, 001H, 001J, 001K, 001L, 001M, 001N		003
200A	A225400224-212		. . SECTION used on 001A, 001B, 001C, 001D, 001E, 001F, 001G, 001H, 001J, 001K, 001L, 001M, 001N		001
210A	ABS0307A2-11		. . SECTION-SEALING USE AS REQUIRED BUY PN ABS0307AB2-11 used on 001A, 001B, 001C, 001D, 001E, 001F, 001G, 001H, 001J, 001K, 001L, 001M, 001N		AR
220A	A225400500-200		. . PLACARD used on 001A, 001B, 001C, 001D, 001E, 001F, 001G, 001H, 001J, 001K, 001L, 001M, 001N		001
230A	A225400500-202		. . PLACARD used on 001A, 001B, 001C, 001D, 001E, 001F, 001G, 001H, 001J, 001K, 001L, 001M, 001N		001
240A	NAS1096-3-10		. . SCREW BUY PN NAS1801-3-10 used on 001A, 001B, 001C, 001D, 001E, 001F, 001G, 001H, 001J, 001K, 001L, 001M, 001N		001

- ITEM NOT ILLUSTRATED

FIG. ITEM	PART NUMBER	AIRLINE STOCK NUMBER	NOMENCLATURE 1234567	EFF CODE	UNITS PER ASSY
250A	NAS1149C0332R		. . WASHER used on 001A, 001B, 001C, 001D, 001E, 001F, 001G, 001H, 001J, 001K, 001L, 001M, 001N		001
260A	D2528641100600		. . COVER-DECOR used on 001A, 001B, 001C, 001D, 001E, 001F, 001G, 001H, 001K, 001L, 001M		003
270A	NAS1102-04-6		. . SCREW used on 001A, 001B, 001C, 001D, 001E, 001F, 001G, 001H, 001J, 001K, 001L, 001M, 001N		018
280A	1240-52		. . HOLDER-COSMETICS used on 001F		001
-290A	NAS514P832-6		. . SCREW used on 001F		002
300A	D2528641100600		. . COVER-DECOR used on 001J, 001N		002
310A	D2528641102000		. . COVER-DECOR POST SB 25-1400 used on 001J, 001N		001

- ITEM NOT ILLUSTRATED

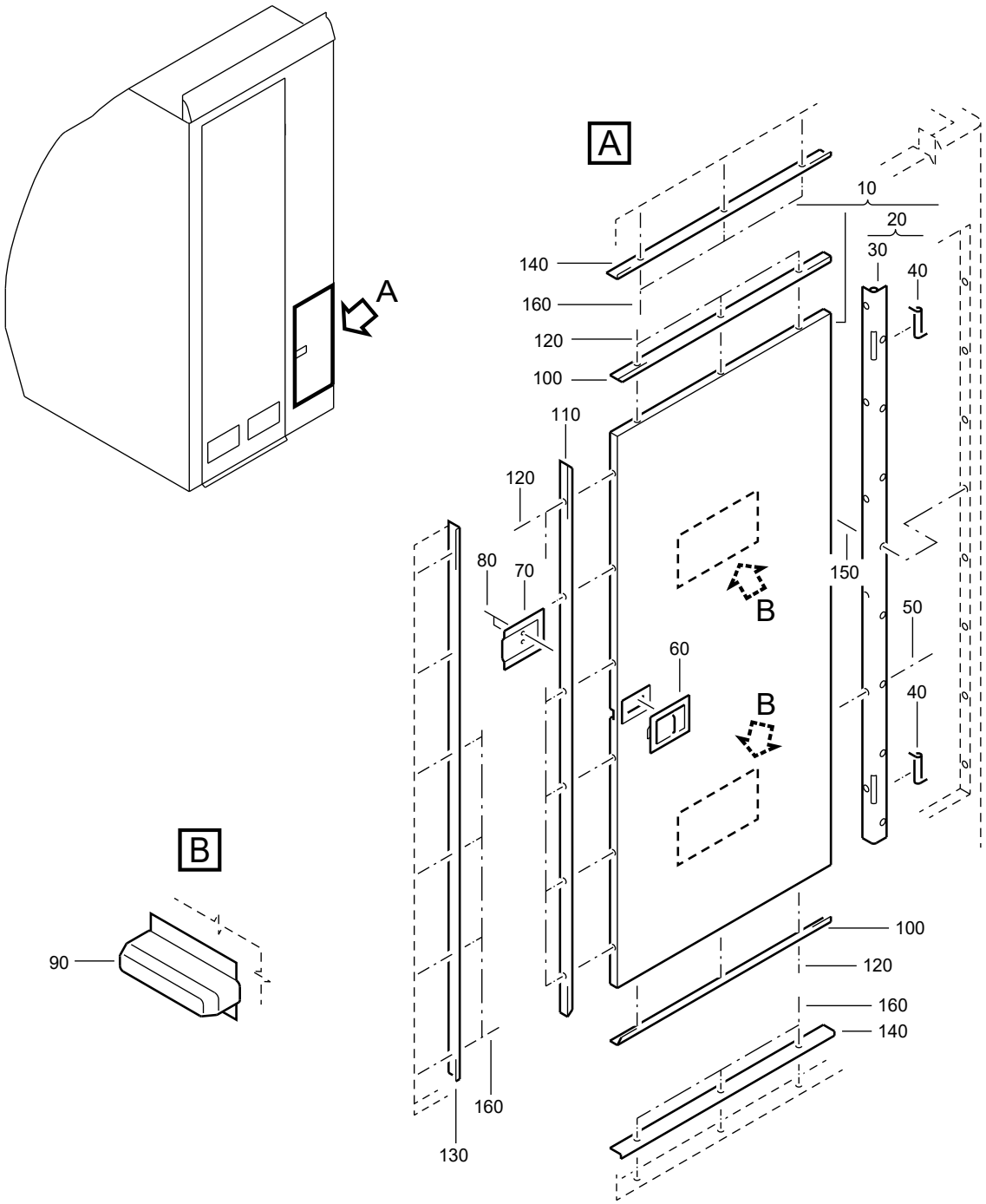

F_PL_254151_09_0_01_00

DOOR-WASTE,EXTERNAL
Figure 9/EN254151SHEET09001

FIG. ITEM	PART NUMBER	AIRLINE STOCK NUMBER	NOMENCLATURE 1234567	EFF CODE	UNITS PER ASSY
09					
-001A	D2549020802868		. DOOR-WASTE,EXTERNAL NP used on 060A (25415141Q) SEE 25-41-51-41Q FOR NHA		RF
010A	A325400228-518		. . DOOR ASSY-WASTE CONTAINER used on 001A		001
020A	A325400401-000		. . . HINGE used on 010A		001
030A	A325400401-204		. . . . HINGE used on 020A		001
040A	5011-02-0001		. . . . SPRING used on 020A		002
050A	NAS1102-06-4		. . . SCREW used on 010A		006
060A	AR138-5-2		. . . LATCH used on 010A		001
070A	A225400432-204		. . . PLATE-MOUNTING used on 010A		001
080A	NAS514P632-5		. . . SCREW used on 010A		002
090A	0-182-005301000		. . . BUMPER used on 010A		002
100A	A225400224-230		. . . SECTION used on 010A		002
110A	A225400224-228		. . . SECTION used on 010A		001
120A	DAN316-3025		. . . SCREW used on 010A		012

- ITEM NOT ILLUSTRATED

FIG. ITEM	PART NUMBER	AIRLINE STOCK NUMBER	NOMENCLATURE 1234567	EFF CODE	UNITS PER ASSY
130A	A225400224-232		. . SECTION used on 001A		001
140A	A225400224-234		. . SECTION used on 001A		002
150A	NAS1102-06-4		. . SCREW used on 001A		006
160A	NAS1096-3-12		. . SCREW BUY PN NAS1801-3-12 used on 001A		012

- ITEM NOT ILLUSTRATED

THIS PAGE IS INTENTIONALLY LEFT BLANK

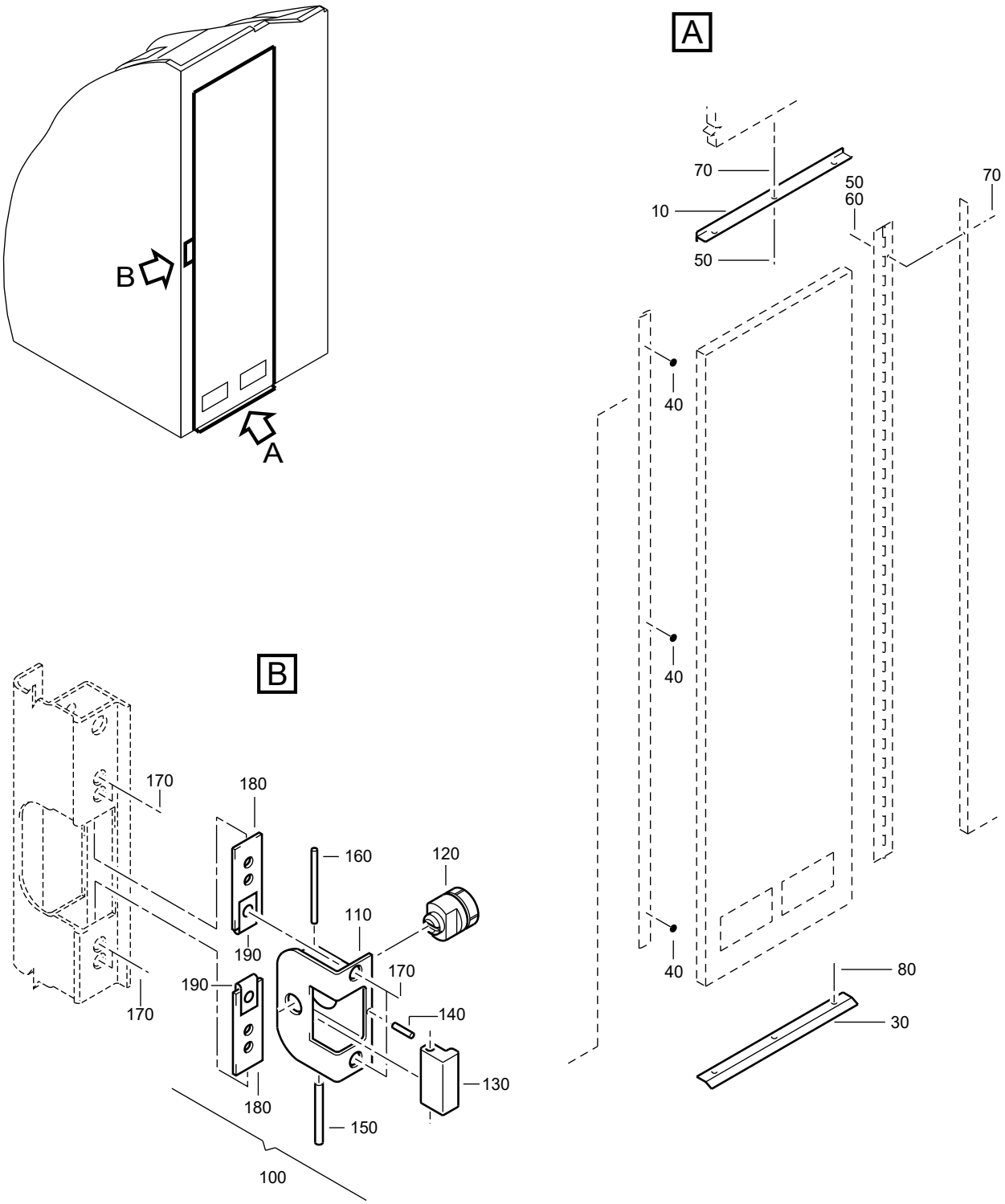

F_PL_254151_10_0_01_01

FIG. ITEM	PART NUMBER	AIRLINE STOCK NUMBER	NOMENCLATURE 1234567	EFF CODE	UNITS PER ASSY
10 -001A	D2549010500069		. DOOR INSTL NP used on 060A (254151010), 060A (25415101A), 060A(25415101B), 060A (25415101C), 060A (25415101D), 060A(25415101E), 060A (25415101F), 060A (25415101G), 060A(25415101H), 060A (25415101J), 060A (25415101K), 060A(25415101L), 060A (25415101M), 060A (25415101N), 060A(25415101P), 060A (25415101Q), 060A (25415101R), 060A(25415101S), 060A (25415101T), 060A (25415101U), 060A(25415101V), 060A (25415101W), 060A (25415101X), 060A(25415101Y), 060A (25415101Z), 060A (254151410), 060A(25415141A), 060A (25415141B), 060A (25415141C), 060A(25415141D), 060A (25415141F), 060A (25415141G), 060A(25415141H), 060A (25415141J), 060A (25415141K), 060A(25415141L), 060A (25415141M), 060A (25415141N), 060A(25415141P), 070A (25415141Q), 060A (25415141R), 060A(25415141S), 060A (25415141T), 060A (25415141U), 060A(25415141V), 060A (25415141W), 060A (25415141X), 060A(25415141Y), 060A (25415141Z), 060A (254151420), 060A(25415142A), 060A (25415142B), 060A (25415142C), 060A(25415142D),		RF

- ITEM NOT ILLUSTRATED

FIG. ITEM	PART NUMBER	AIRLINE STOCK NUMBER	NOMENCLATURE 1234567	EFF CODE	UNITS PER ASSY
			060A (25415142E), 060A (25415142F), 060B(25415142G) SEE 25-41-51-010 FOR NHA SEE 25-41-51-01A FOR NHA SEE 25-41-51-01B FOR NHA SEE 25-41-51-01C FOR NHA SEE 25-41-51-01D FOR NHA SEE 25-41-51-01E FOR NHA SEE 25-41-51-01F FOR NHA SEE 25-41-51-01G FOR NHA SEE 25-41-51-01H FOR NHA SEE 25-41-51-01J FOR NHA SEE 25-41-51-01K FOR NHA SEE 25-41-51-01L FOR NHA SEE 25-41-51-01M FOR NHA SEE 25-41-51-01N FOR NHA SEE 25-41-51-01P FOR NHA SEE 25-41-51-01Q FOR NHA SEE 25-41-51-01R FOR NHA SEE 25-41-51-01S FOR NHA SEE 25-41-51-01T FOR NHA SEE 25-41-51-01U FOR NHA SEE 25-41-51-01V FOR NHA SEE 25-41-51-01W FOR NHA SEE 25-41-51-01X FOR NHA SEE 25-41-51-01Y FOR NHA SEE 25-41-51-01Z FOR NHA SEE 25-41-51-410 FOR NHA SEE 25-41-51-41A FOR NHA SEE 25-41-51-41B FOR NHA SEE 25-41-51-41C FOR NHA SEE 25-41-51-41D FOR NHA SEE 25-41-51-41F FOR NHA SEE 25-41-51-41G FOR NHA SEE 25-41-51-41H FOR NHA SEE 25-41-51-41J FOR NHA SEE 25-41-51-41K FOR NHA SEE 25-41-51-41L FOR NHA SEE 25-41-51-41M FOR NHA SEE 25-41-51-41N FOR NHA		

- ITEM NOT ILLUSTRATED

FIG. ITEM	PART NUMBER	AIRLINE STOCK NUMBER	NOMENCLATURE 1234567		EFF CODE	UNITS PER ASSY
			SEE 25-41-51-41P FOR NHA SEE 25-41-51-41Q FOR NHA SEE 25-41-51-41R FOR NHA SEE 25-41-51-41S FOR NHA SEE 25-41-51-41T FOR NHA SEE 25-41-51-41U FOR NHA SEE 25-41-51-41V FOR NHA SEE 25-41-51-41W FOR NHA SEE 25-41-51-41X FOR NHA SEE 25-41-51-41Y FOR NHA SEE 25-41-51-41Z FOR NHA SEE 25-41-51-420 FOR NHA SEE 25-41-51-42A FOR NHA SEE 25-41-51-42B FOR NHA SEE 25-41-51-42C FOR NHA SEE 25-41-51-42D FOR NHA SEE 25-41-51-42E FOR NHA SEE 25-41-51-42F FOR NHA SEE 25-41-51-42G FOR NHA			
-001B	D2549020712069		. DOOR INSTL used on 060A (25415141E) SEE 25-41-51-41E FOR NHA	NP		RF
-001D	D2549020610069		. DOOR INSTL POST SB 25-1316 used on 060B (25415101M), 060B (25415101Y) SEE 25-41-51-01M FOR NHA SEE 25-41-51-01Y FOR NHA	NP		RF
010A	A225400224-200		. . SECTION used on 001A, 001B, 001D			001
030A	A225400205-200		. . SILL used on 001A, 001D			001
030B	A225400205-230		. . SILL used on 001B			001

- ITEM NOT ILLUSTRATED

FIG. ITEM	PART NUMBER	AIRLINE STOCK NUMBER	NOMENCLATURE 1234567	EFF CODE	UNITS PER ASSY
040A	66333493		. . BUMPER BUY PN SJ5302TRANSPAR used on 001A, 001B, 001D		003
050A	NAS514P832-7		. . SCREW used on 001A, 001B, 001D		033
060A	0-123-000700000		. . WASHER used on 001A, 001B, 001D		014
070A	NSA5067-08-1		. . NUT used on 001A, 001B, 001D		033
080A	MS24693C48		. . SCREW used on 001A, 001B, 001D		003
100A	A225400208-000		. . DEVICE ASSY-EMERGENCY UNLOCKING,SINGLE DOOR POST SB 25-1316 used on 001D		001
110A	A225400208-200		. . . HOUSING-EMERGENCY UN-LOCKING DEVICE used on 100A		001
120A	A225400208-202		. . . PIVOT-EMERGENCY UN-LOCKING DEVICE used on 100A		001
130A	A225400208-204		. . . STRIKE-EMERGENCY UN-LOCKING DEVICE used on 100A		001
140A	SM1275-1KNM04		. . . CATCH-SNAP used on 100A		001
150A	A225400208-208		. . . BOLT used on 100A		001
160A	A225400208-210		. . . PIN used on 100A		001

- ITEM NOT ILLUSTRATED

FIG. ITEM	PART NUMBER	AIRLINE STOCK NUMBER	NOMENCLATURE 1234567	EFF CODE	UNITS PER ASSY
170A	NAS514P832-7		. . SCREW POST SB 25-1316 used on 001D		006
180A	A225400221-202		. . PLATE POST SB 25-1316 used on 001D		002
190A	NSA5067-08-1		. . NUT POST SB 25-1316 used on 001D		002

- ITEM NOT ILLUSTRATED

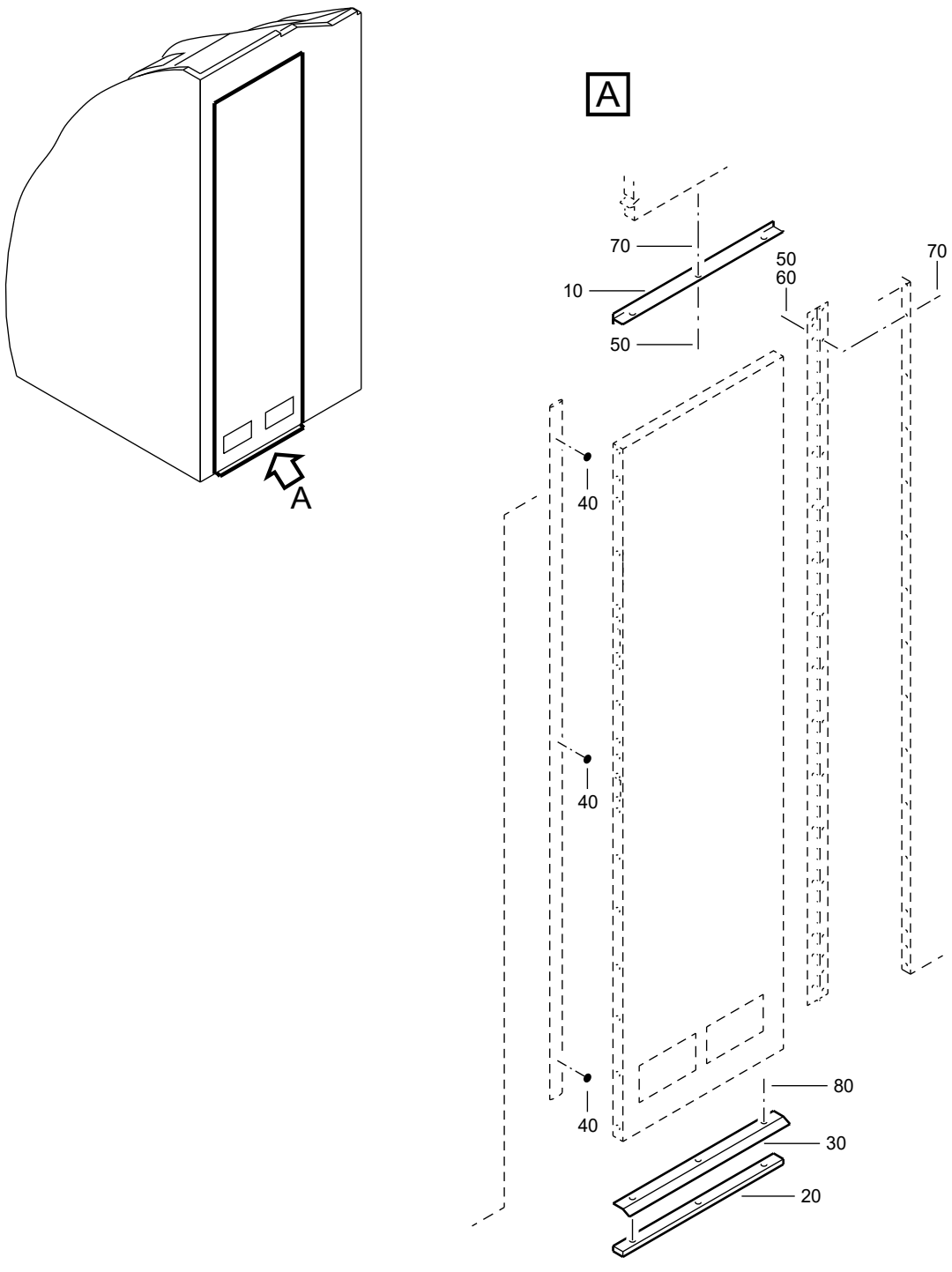

F_PL_254151_10_A_01_00

DOOR INSTL
Figure 10A/EN254151SHEET10A01

FIG. ITEM	PART NUMBER	AIRLINE STOCK NUMBER	NOMENCLATURE 1234567	EFF CODE	UNITS PER ASSY
10A -001C	D2549020401269		. DOOR INSTL NP used on 060B (25415101C), 060B (25415101D), 060B (25415101G), 060B (25415101H), 060B (25415101K), 060B(25415101L), 060B (25415101N), 060B (25415101Q), 060B(25415101S), 060B (25415101T), 060B (25415101V), 060B (25415101W), 060B (25415101Z), 060B (254151410), 060B(25415141B), 060B (25415141D), 060B (25415141F), 060B(25415141G), 060B (25415141J), 060B (25415141K), 060B(25415141L), 060B (25415141M), 060B (25415141N), 060B(25415141P), 060B (25415141R), 060B (25415141S), 060B(25415141T), 060B (25415141U), 060B (25415141V), 060B (25415141W), 060B (25415141X), 060B (25415141Y), 060B(25415141Z), 060B (25415142A), 060B (25415142B), 060B(25415142C), 060B (25415142D), 060B (25415142E), 060B(25415142F), 060A (25415142G), 060A (25415142H), 060A(25415142J), 060A (25415142K), 060A (25415142L), 060A(25415142M), 060A (25415142N), 060A (25415142P), 060A(25415142Q), 060A (25415142R), 060A		RF

- ITEM NOT ILLUSTRATED

FIG. ITEM	PART NUMBER	AIRLINE STOCK NUMBER	NOMENCLATURE 1234567	EFF CODE	UNITS PER ASSY
			(25415142S), 060A(25415142T), 060A (25415142U) SEE 25-41-51-01C FOR NHA SEE 25-41-51-01D FOR NHA SEE 25-41-51-01G FOR NHA SEE 25-41-51-01H FOR NHA SEE 25-41-51-01K FOR NHA SEE 25-41-51-01L FOR NHA SEE 25-41-51-01N FOR NHA SEE 25-41-51-01Q FOR NHA SEE 25-41-51-01S FOR NHA SEE 25-41-51-01T FOR NHA SEE 25-41-51-01V FOR NHA SEE 25-41-51-01W FOR NHA SEE 25-41-51-01Z FOR NHA SEE 25-41-51-410 FOR NHA SEE 25-41-51-41B FOR NHA SEE 25-41-51-41D FOR NHA SEE 25-41-51-41F FOR NHA SEE 25-41-51-41G FOR NHA SEE 25-41-51-41J FOR NHA SEE 25-41-51-41K FOR NHA SEE 25-41-51-41L FOR NHA SEE 25-41-51-41M FOR NHA SEE 25-41-51-41N FOR NHA SEE 25-41-51-41P FOR NHA SEE 25-41-51-41R FOR NHA SEE 25-41-51-41S FOR NHA SEE 25-41-51-41T FOR NHA SEE 25-41-51-41U FOR NHA SEE 25-41-51-41V FOR NHA SEE 25-41-51-41W FOR NHA SEE 25-41-51-41X FOR NHA SEE 25-41-51-41Y FOR NHA SEE 25-41-51-41Z FOR NHA SEE 25-41-51-42A FOR NHA SEE 25-41-51-42B FOR NHA SEE 25-41-51-42C FOR NHA SEE 25-41-51-42D FOR NHA SEE 25-41-51-42E FOR NHA		

- ITEM NOT ILLUSTRATED

FIG. ITEM	PART NUMBER	AIRLINE STOCK NUMBER	NOMENCLATURE 1234567	EFF CODE	UNITS PER ASSY
			SEE 25-41-51-42F FOR NHA SEE 25-41-51-42G FOR NHA SEE 25-41-51-42H FOR NHA SEE 25-41-51-42J FOR NHA SEE 25-41-51-42K FOR NHA SEE 25-41-51-42L FOR NHA SEE 25-41-51-42M FOR NHA SEE 25-41-51-42N FOR NHA SEE 25-41-51-42P FOR NHA SEE 25-41-51-42Q FOR NHA SEE 25-41-51-42R FOR NHA SEE 25-41-51-42S FOR NHA SEE 25-41-51-42T FOR NHA SEE 25-41-51-42U FOR NHA		
010A	A225400224-200		. . SECTION used on 001C		001
020A	A425400201-200		. . SPACER POST SB 25-1314 used on 001C		001
-030C	A225400205-278		. . SILL POST SB 25-1314 used on 001C		001
040A	66333493		. . BUMPER BUY PN SJ5302TRANSPAR used on 001C		003
050A	NAS514P832-7		. . SCREW used on 001C		033
060A	0-123-000700000		. . WASHER used on 001C		014
070A	NSA5067-08-1		. . NUT used on 001C		033

- ITEM NOT ILLUSTRATED

FIG. ITEM	PART NUMBER	AIRLINE STOCK NUMBER	NOMENCLATURE 1234567	EFF CODE	UNITS PER ASSY
-080B	MS24693C51		. . SCREW POST SB 25-1314 used on 001C		003

- ITEM NOT ILLUSTRATED

THIS PAGE IS INTENTIONALLY LEFT BLANK

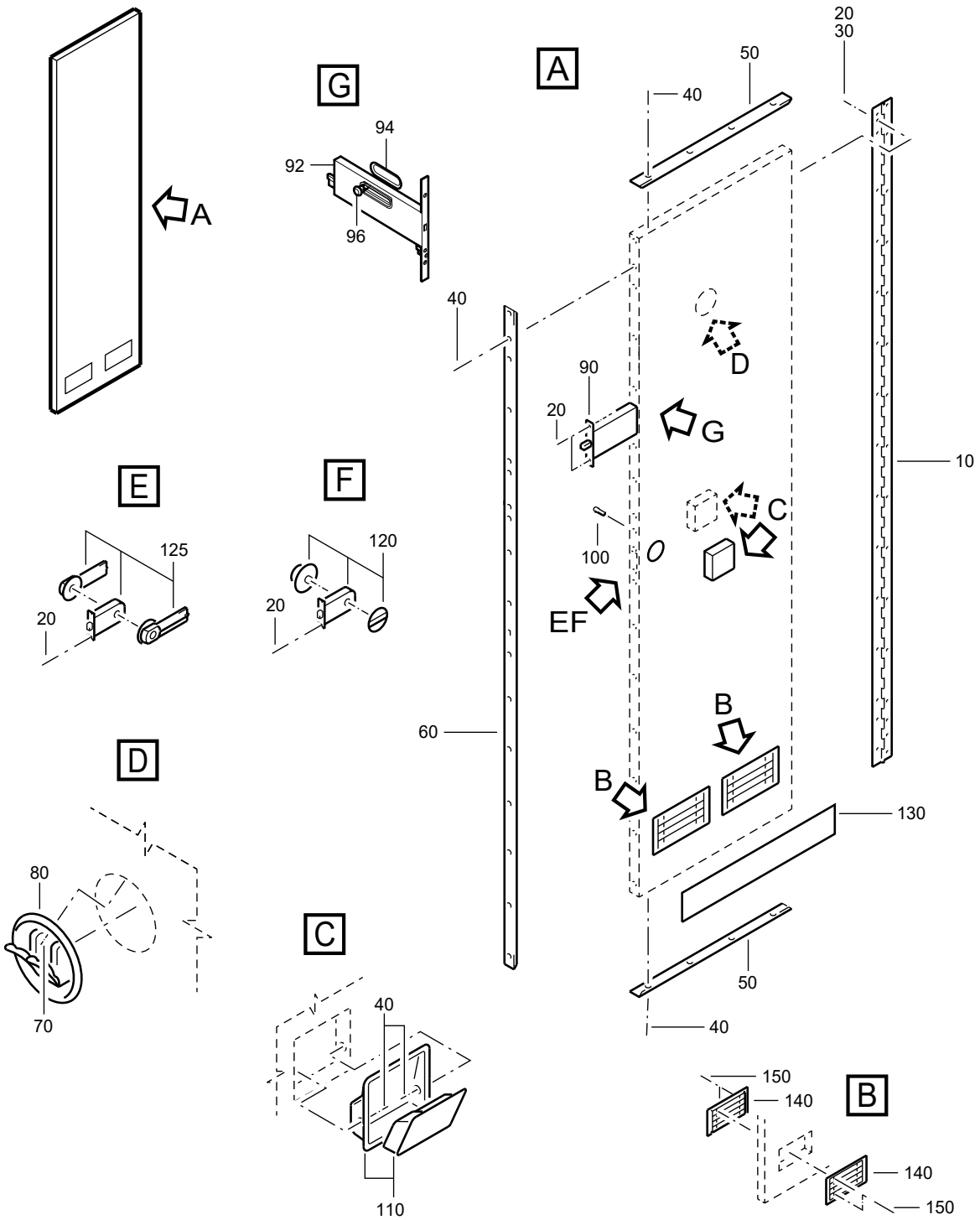

F_PL_254151_11_0_01_00

DOOR ASSY-SINGLE
Figure 11/EN254151SHEET11001

FIG. ITEM	PART NUMBER	AIRLINE STOCK NUMBER	NOMENCLATURE 1234567	EFF CODE	UNITS PER ASSY
11					
-001A	A225400270-500		. DOOR ASSY-SINGLE used on 070A (254151010), 070D (25415101A), 070B(25415101B), 070B (25415101C), 070A (25415101E) SEE 25-41-51-010 FOR NHA SEE 25-41-51-01A FOR NHA SEE 25-41-51-01B FOR NHA SEE 25-41-51-01C FOR NHA SEE 25-41-51-01E FOR NHA		RF
-001B	A225400270-504		. DOOR ASSY-SINGLE used on 070B (254151010), 070F (25415101A), 070E(25415101B), 070E (25415101D), 070C (25415101E), 070C(25415101F) SEE 25-41-51-010 FOR NHA SEE 25-41-51-01A FOR NHA SEE 25-41-51-01B FOR NHA SEE 25-41-51-01D FOR NHA SEE 25-41-51-01E FOR NHA SEE 25-41-51-01F FOR NHA		RF
-001C	A225400270-506		. DOOR ASSY-SINGLE used on 070C (254151010), 070A (25415101B), 070F(25415101E) SEE 25-41-51-010 FOR NHA SEE 25-41-51-01B FOR NHA SEE 25-41-51-01E FOR NHA		RF

- ITEM NOT ILLUSTRATED

FIG. ITEM	PART NUMBER	AIRLINE STOCK NUMBER	NOMENCLATURE 1234567	EFF CODE	UNITS PER ASSY
-001D	A225400270-502		. DOOR ASSY-SINGLE used on 070D (254151010), 070C (25415101A), 070C(25415101B), 070B (25415101D), 070D (25415101E), 070E(25415101F), 070G (25415101G), 070D (25415101H), 070B(25415141B) SEE 25-41-51-010 FOR NHA SEE 25-41-51-01A FOR NHA SEE 25-41-51-01B FOR NHA SEE 25-41-51-01D FOR NHA SEE 25-41-51-01E FOR NHA SEE 25-41-51-01F FOR NHA SEE 25-41-51-01G FOR NHA SEE 25-41-51-01H FOR NHA SEE 25-41-51-41B FOR NHA		RF
-001E	A225400270-508		. DOOR ASSY-SINGLE used on 070E (254151010), 070B (25415101A), 070D(25415101B), 070D (25415101C), 070C (25415101D), 070E(25415101E), 070D (25415101F), 070A (25415101H) SEE 25-41-51-010 FOR NHA SEE 25-41-51-01A FOR NHA SEE 25-41-51-01B FOR NHA SEE 25-41-51-01C FOR NHA SEE 25-41-51-01D FOR NHA SEE 25-41-51-01E FOR NHA SEE 25-41-51-01F FOR NHA SEE 25-41-51-01H FOR NHA		RF

- ITEM NOT ILLUSTRATED

FIG. ITEM	PART NUMBER	AIRLINE STOCK NUMBER	NOMENCLATURE 1234567	EFF CODE	UNITS PER ASSY
-001F	A225400270-510		. DOOR ASSY-SINGLE used on 070A (25415101A), 070G (25415101B), 070A (25415101C), 070G (25415101E), 070B (25415101F), 070J(25415101K) SEE 25-41-51-01A FOR NHA SEE 25-41-51-01B FOR NHA SEE 25-41-51-01C FOR NHA SEE 25-41-51-01E FOR NHA SEE 25-41-51-01F FOR NHA SEE 25-41-51-01K FOR NHA		RF
-001G	A225400270-512		. DOOR ASSY-SINGLE used on 070F (254151010), 070E (25415101A), 070F(25415101B), 070E (25415101C), 070B (25415101E), 070J(25415101F), 070D (25415101G), 070C (25415101H), 070C(25415101J), 070K (25415101K) SEE 25-41-51-010 FOR NHA SEE 25-41-51-01A FOR NHA SEE 25-41-51-01B FOR NHA SEE 25-41-51-01C FOR NHA SEE 25-41-51-01E FOR NHA SEE 25-41-51-01F FOR NHA SEE 25-41-51-01G FOR NHA SEE 25-41-51-01H FOR NHA SEE 25-41-51-01J FOR NHA SEE 25-41-51-01K FOR NHA		RF
-001H	A225400270-900		. DOOR ASSY-SINGLE used on 070G (25415101A), 070G (25415101C), 070F (25415101H) SEE 25-41-51-01A FOR NHA SEE 25-41-51-01C FOR NHA SEE 25-41-51-01H FOR NHA		RF

- ITEM NOT ILLUSTRATED

FIG. ITEM	PART NUMBER	AIRLINE STOCK NUMBER	NOMENCLATURE 1234567	EFF CODE	UNITS PER ASSY
-001J	A225400270-514		. DOOR ASSY-SINGLE used on 070H (25415101G) SEE 25-41-51-01G FOR NHA		RF
-001K	A2254002708520		. DOOR ASSY-SINGLE POST SB 25-1314 used on 070F (25415101C) SEE 25-41-51-01C FOR NHA		RF
-001L	A225400270-538		. DOOR ASSY-SINGLE used on 070B (25415101H) SEE 25-41-51-01H FOR NHA		RF
-001M	A2254002708510		. DOOR ASSY-SINGLE POST SB 25-1314 used on 070E (25415141T) SEE 25-41-51-41T FOR NHA		RF
-001N	A2254002708512		. DOOR ASSY-SINGLE POST SB 25-1314 used on 070J (25415101C), 070K (25415101H) SEE 25-41-51-01C FOR NHA SEE 25-41-51-01H FOR NHA		RF
010A	A225400272-200		. . HINGE BUY PN A225400272-000 used on 001A, 001B, 001C, 001D, 001E, 001F, 001G, 001H, 001K, 001L, 001M, 001N		001
-010B	A225400272-000		. . HINGE used on 001J		001
-015A	AN565B6H4		. . . SETSCREW used on 010B		002
020A	NAS514P832-6		. . SCREW used on 001A, 001B, 001C, 001D, 001E, 001F, 001G, 001H, 001J, 001K, 001L, 001M, 001N		019

- ITEM NOT ILLUSTRATED

FIG. ITEM	PART NUMBER	AIRLINE STOCK NUMBER	NOMENCLATURE 1234567	EFF CODE	UNITS PER ASSY
030A	0-123-000700000		. . WASHER used on 001A, 001B, 001C, 001D, 001E, 001F, 001G, 001H, 001J, 001K, 001L, 001M, 001N		015
040A	ABS0704-3-22		. . SCREW used on 001A, 001B, 001C, 001D, 001E, 001F, 001G, 001H, 001J, 001K, 001L, 001M, 001N		026
050A	A225400272-202		. . SECTION used on 001A, 001B, 001C, 001D, 001E, 001F, 001G, 001H, 001J, 001K, 001L, 001M, 001N		002
060A	A225400272-205		. . SECTION used on 001A, 001B, 001C, 001D, 001E, 001F, 001G, 001H, 001J, 001K, 001L, 001M, 001N		001
070A	NAS514P632-6		. . SCREW used on 001A, 001B, 001C, 001D, 001E, 001F, 001G, 001H, 001J, 001K, 001L, 001M, 001N		001
080A	AR197		. . HOOK-COAT used on 001A, 001B, 001C, 001D, 001E, 001F, 001G, 001H, 001K, 001M, 001N		001
-080B	AR197-3		. . HOOK-COAT used on 001J, 001L		001
-090A	5472R		. . LATCH-LAVATORY SIMPLE DOOR RPLD BY 090B used on 001A, 001B, 001C, 001D, 001E, 001F, 001G, 001H, 001J, 001K, 001L, 001M, 001N		001

- ITEM NOT ILLUSTRATED

FIG. ITEM	PART NUMBER	AIRLINE STOCK NUMBER	NOMENCLATURE 1234567	EFF CODE	UNITS PER ASSY
090B	A8-254-2015-011		. . LATCH-LAVATORY SIMPLE DOOR RPLS 090A used on 001A, 001B, 001C, 001D, 001E, 001F, 001G, 001H, 001J, 001K, 001L, 001M, 001N		001
092A	A8-254-2015-951		. . . LOCK used on 090B		001
094A	A8-254-2015-931		. . . RELEASE SYSTEM used on 090B		001
096A	A8-254-2014-941		. . . KNOB used on 090B		001
100A	5L0044600109000		. . BOLT-THREADED used on 001A, 001B, 001C, 001D, 001E, 001F, 001G, 001H, 001J, 001K, 001L, 001M, 001N		001
110A	1A113-0139-1		. . ASHTRAY ASSY used on 001A, 001B, 001C, 001D, 001E, 001F, 001G, 001H, 001J, 001K, 001L, 001M, 001N		002
-113A	1A113-0139-101		. . . COVER-ASHTRAY used on 110A		001
-115A	1A113-0139-103		. . . CASE-ASHTRAY used on 110A		001
120A	2863		. . LATCH ASSY 80477 used on 001A, 001B, 001C, 001D, 001E, 001F, 001G, 001J, 001K, 001L, 001M, 001N		001
125A	AM767B		. . LATCH ASSY used on 001H		001

- ITEM NOT ILLUSTRATED

FIG. ITEM	PART NUMBER	AIRLINE STOCK NUMBER	NOMENCLATURE 1234567	EFF CODE	UNITS PER ASSY
130A	A225400211-216		. . PLATE-SCUFF used on 001A, 001B, 001C, 001D, 001E, 001F, 001G, 001H, 001J, 001K, 001L, 001M, 001N		001
140A	F2547242620000		. . OUTLET-AIR used on 001A, 001B, 001C, 001D, 001E, 001F, 001G, 001H, 001J, 001K, 001L, 001M, 001N		004
150A	ABS0706-25-16		. . SCREW used on 001A, 001B, 001C, 001D, 001E, 001F, 001G, 001H, 001J, 001K, 001L, 001M, 001N		008

- ITEM NOT ILLUSTRATED

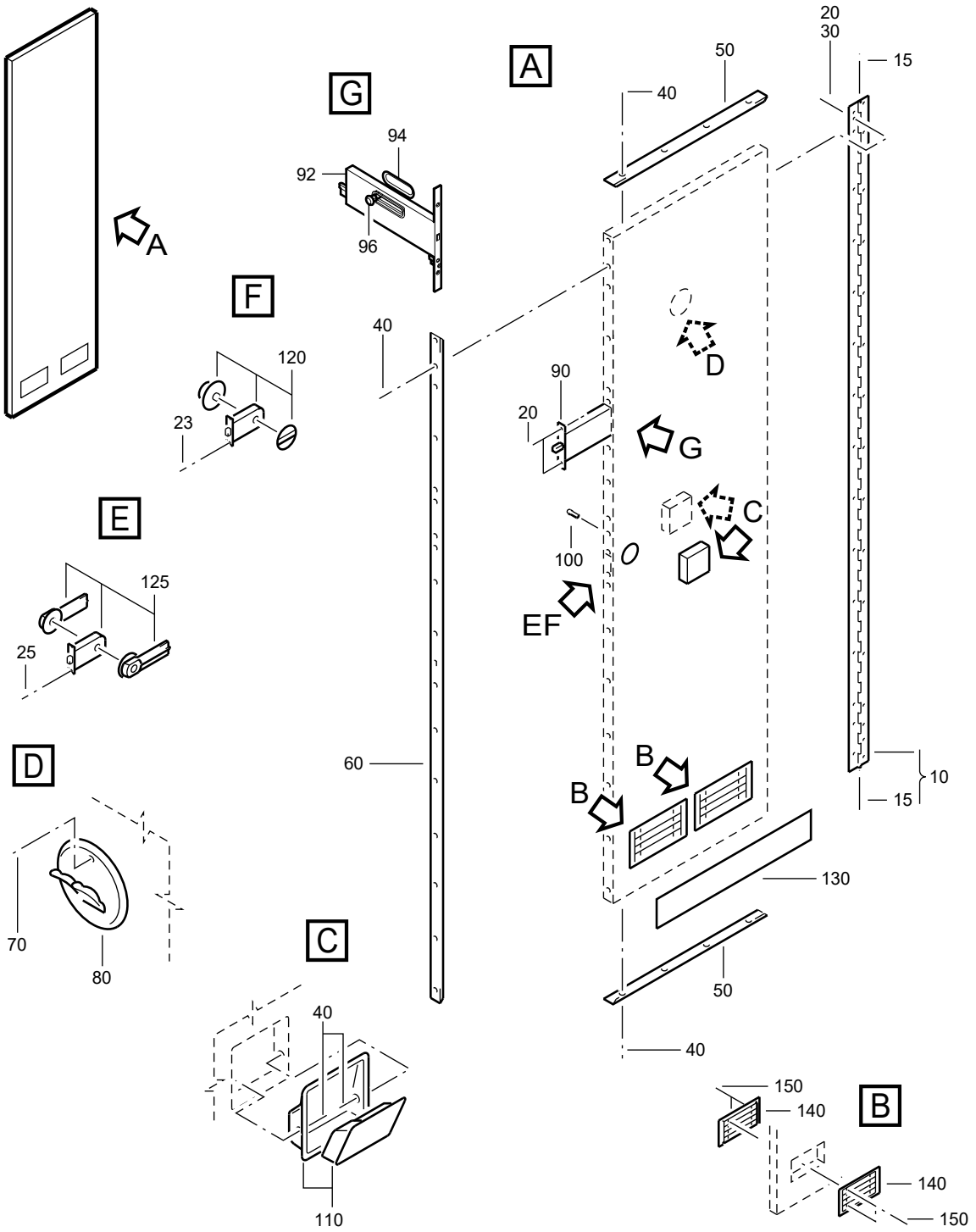

F_PL_254151_11_A_01_01

DOOR ASSY-SINGLE
Figure 11A/EN254151SHEET11A01

FIG. ITEM	PART NUMBER	AIRLINE STOCK NUMBER	NOMENCLATURE 1234567	EFF CODE	UNITS PER ASSY
11A					
-001A	A225400270-522		. DOOR ASSY-SINGLE used on 070A (25415101D) SEE 25-41-51-01D FOR NHA		RF
-001B	A225400270-904		. DOOR ASSY-SINGLE used on 070D (25415101D) SEE 25-41-51-01D FOR NHA		RF
-001C	A225400270-524		. DOOR ASSY-SINGLE used on 070K (254151410) SEE 25-41-51-410 FOR NHA		RF
-001D	A225400270-526		. DOOR ASSY-SINGLE used on 070H (25415101E) SEE 25-41-51-01E FOR NHA		RF
-001E	A225400270-906		. DOOR ASSY-SINGLE used on 070J (25415101E), 070A (25415101F), 070E(25415101G), 070E (25415101H), 070H (25415101K), 070J(25415101M) SEE 25-41-51-01E FOR NHA SEE 25-41-51-01F FOR NHA SEE 25-41-51-01G FOR NHA SEE 25-41-51-01H FOR NHA SEE 25-41-51-01K FOR NHA SEE 25-41-51-01M FOR NHA		RF
-001F	A225400270-908		. DOOR ASSY-SINGLE used on 070F (25415101F) SEE 25-41-51-01F FOR NHA		RF
-001G	A225400270-528		. DOOR ASSY-SINGLE used on 070G (25415101F), 070J (25415101N) SEE 25-41-51-01F FOR NHA SEE 25-41-51-01N FOR NHA		RF

- ITEM NOT ILLUSTRATED

FIG. ITEM	PART NUMBER	AIRLINE STOCK NUMBER	NOMENCLATURE 1234567	EFF CODE	UNITS PER ASSY
-001H	A225400270-530		. DOOR ASSY-SINGLE used on 070H (25415101F) SEE 25-41-51-01F FOR NHA		RF
-001J	A225400270-532		. DOOR ASSY-SINGLE used on 070K (25415101F) SEE 25-41-51-01F FOR NHA		RF
-001K	A225400270-910		. DOOR ASSY-SINGLE used on 070A (25415101G) SEE 25-41-51-01G FOR NHA		RF
-001L	A225400270-534		. DOOR ASSY-SINGLE used on 070B (25415101G), 070H (25415101H) SEE 25-41-51-01G FOR NHA SEE 25-41-51-01H FOR NHA		RF
-001M	A225400270-536		. DOOR ASSY-SINGLE used on 070C (25415101G) SEE 25-41-51-01G FOR NHA		RF
-001N	A2254002708522		. DOOR ASSY-SINGLE POST SB 25-1314 used on 070F (25415101D) SEE 25-41-51-01D FOR NHA		RF
010A	A225400272-200		. . HINGE BUY PN A225400272-000 used on 001A, 001C, 001D		001
-010B	A225400272-000		. . HINGE used on 001B, 001E, 001F, 001G, 001H, 001J, 001K, 001L, 001M, 001N		001
015A	AN565B6H4		. . . SETSCREW used on 010B		002

- ITEM NOT ILLUSTRATED

FIG. ITEM	PART NUMBER	AIRLINE STOCK NUMBER	NOMENCLATURE 1234567	EFF CODE	UNITS PER ASSY
020A	NAS514P832-6		. . SCREW used on 001A, 001B, 001C, 001D, 001E, 001F, 001G, 001H, 001J, 001K, 001L, 001M, 001N		017
023A	NAS514P832-6		. . SCREW used on 001A, 001C, 001D, 001G, 001H, 001J, 001L, 001M, 001N		002
025A	NAS514P832-6		. . SCREW used on 001B, 001E, 001F, 001K		002
030A	0-123-000700000		. . WASHER used on 001A, 001B, 001C, 001D, 001E, 001F, 001G, 001H, 001J, 001K, 001L, 001M, 001N		015
040A	DAN316-3025		. . SCREW used on 001A, 001B, 001C, 001D, 001E, 001F, 001G, 001H, 001J, 001K, 001L, 001M, 001N		026
050A	A225400272-202		. . SECTION used on 001A, 001B, 001C, 001D, 001E, 001F, 001G, 001H, 001J, 001K, 001L, 001M, 001N		002
060A	A225400272-205		. . SECTION used on 001A, 001B, 001C, 001D, 001E, 001F, 001G, 001H, 001J, 001K, 001L, 001M, 001N		001
070A	NAS514P632-6		. . SCREW used on 001A, 001B, 001C, 001D, 001E, 001F, 001G, 001H, 001J, 001K, 001L, 001M, 001N		001

- ITEM NOT ILLUSTRATED

FIG. ITEM	PART NUMBER	AIRLINE STOCK NUMBER	NOMENCLATURE 1234567	EFF CODE	UNITS PER ASSY
080A	AR197-3		. . HOOK-COAT used on 001A, 001B, 001C, 001D, 001E, 001F, 001G, 001H, 001J, 001K, 001L, 001M, 001N		001
-090A	5472R		. . LATCH-LAVATORY SIMPLE DOOR RPLD BY 090B used on 001A, 001B, 001C, 001D, 001E, 001F, 001G, 001H, 001J, 001K, 001L, 001M, 001N		001
090B	A8-254-2015-011		. . LATCH-LAVATORY SIMPLE DOOR RPLS 090A used on 001A, 001B, 001C, 001D, 001E, 001F, 001G, 001H, 001J, 001K, 001L, 001M, 001N		001
092A	A8-254-2015-951		. . . LOCK used on 090B		001
094A	A8-254-2015-931		. . . RELEASE SYSTEM used on 090B		001
096A	A8-254-2014-941		. . . KNOB used on 090B		001
100A	5L0044600109000		. . BOLT-THREADED used on 001A, 001B, 001C, 001D, 001E, 001F, 001G, 001H, 001J, 001K, 001L, 001M, 001N		001
110A	1A113-0139-1		. . ASHTRAY ASSY used on 001A, 001B, 001C, 001D, 001E, 001F, 001G, 001H, 001J, 001K, 001L, 001M, 001N		002
-113A	1A113-0139-101		. . . COVER-ASHTRAY used on 110A		001

- ITEM NOT ILLUSTRATED

FIG. ITEM	PART NUMBER	AIRLINE STOCK NUMBER	NOMENCLATURE 1234567	EFF CODE	UNITS PER ASSY
-115A	1A113-0139-103		. . . CASE-ASHTRAY used on 110A		001
120A	2863		. . LATCH ASSY 80477 used on 001A, 001C, 001D, 001G, 001H, 001J, 001L, 001M, 001N		001
125A	AM767B		. . LATCH ASSY used on 001B, 001E, 001F, 001K		001
130A	A225400211-216		. . PLATE-SCUFF used on 001A, 001B, 001C, 001D, 001E, 001F, 001G, 001H, 001J, 001K, 001L, 001M, 001N		001
140A	F2547242620000		. . OUTLET-AIR used on 001A, 001B, 001C, 001D, 001E, 001F, 001G, 001H, 001J, 001K, 001L, 001M, 001N		004
150A	ABS0706-25-16		. . SCREW used on 001A, 001B, 001C, 001D, 001E, 001F, 001G, 001H, 001J, 001K, 001L, 001M, 001N		008

- ITEM NOT ILLUSTRATED

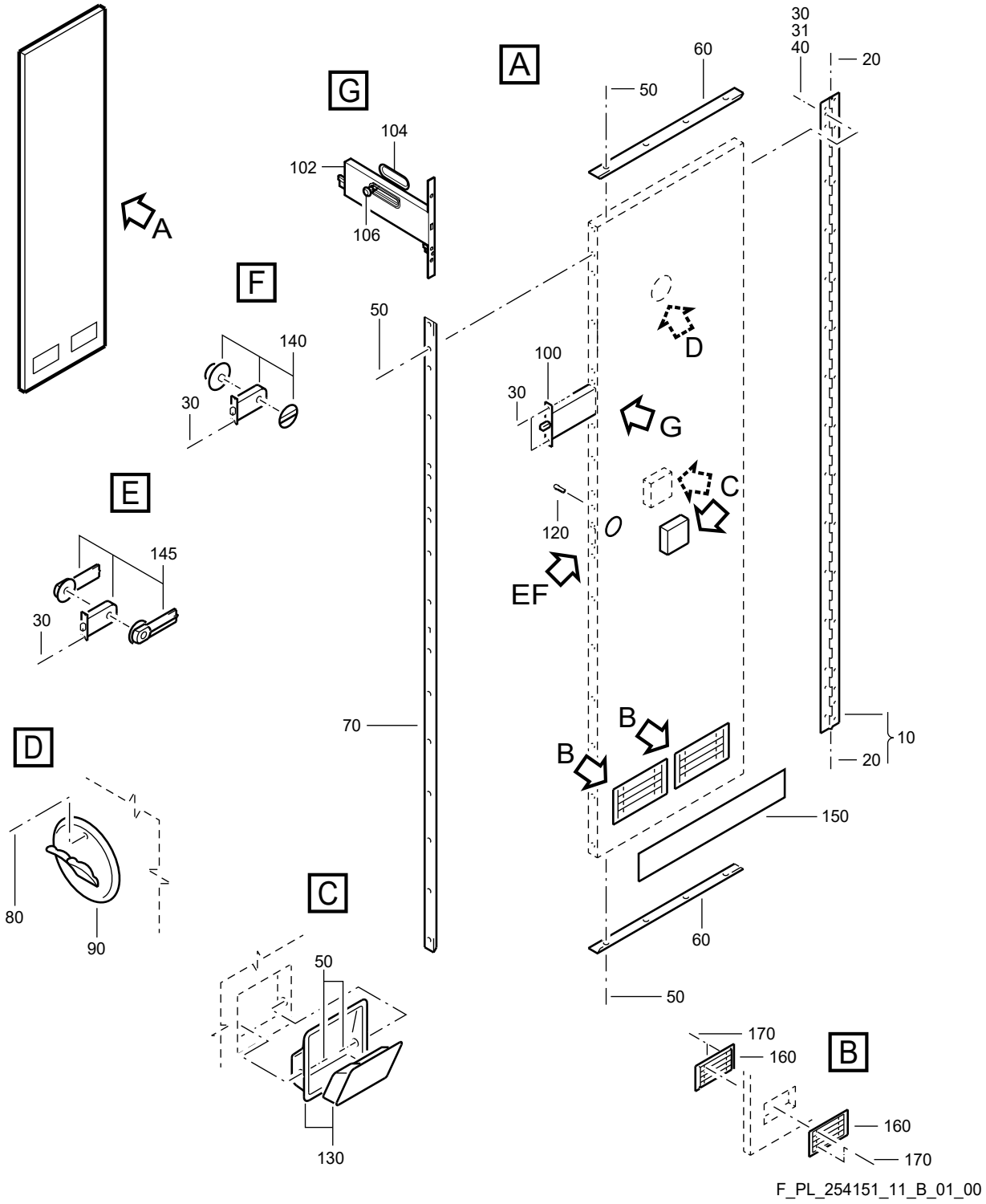

DOOR ASSY-SINGLE
Figure 11B/EN254151SHEET11B01

FIG. ITEM	PART NUMBER	AIRLINE STOCK NUMBER	NOMENCLATURE 1234567	EFF CODE	UNITS PER ASSY
11B					
-001A	A225400270-540		. DOOR ASSY-SINGLE used on 070G (25415101H) SEE 25-41-51-01H FOR NHA		RF
-001B	A225400276-532		. DOOR ASSY-SINGLE used on 070A (25415101J) SEE 25-41-51-01J FOR NHA		RF
-001C	A225400276-502		. DOOR ASSY-SINGLE used on 070B (25415101J), 070E (25415101K), 070E(25415101L), 070E (25415101N), 070D (25415101P), 070L(25415101Q), 070A (25415101T), 070C (25415101U), 070D(25415141B), 070K (25415142F) SEE 25-41-51-01J FOR NHA SEE 25-41-51-01K FOR NHA SEE 25-41-51-01L FOR NHA SEE 25-41-51-01N FOR NHA SEE 25-41-51-01P FOR NHA SEE 25-41-51-01Q FOR NHA SEE 25-41-51-01T FOR NHA SEE 25-41-51-01U FOR NHA SEE 25-41-51-41B FOR NHA SEE 25-41-51-42F FOR NHA		RF
-001D	A225400276-530		. DOOR ASSY-SINGLE used on 070D (25415101J), 070C (25415101N), 070K(25415101T) SEE 25-41-51-01J FOR NHA SEE 25-41-51-01N FOR NHA SEE 25-41-51-01T FOR NHA		RF

- ITEM NOT ILLUSTRATED

FIG. ITEM	PART NUMBER	AIRLINE STOCK NUMBER	NOMENCLATURE 1234567	EFF CODE	UNITS PER ASSY
-001E	A225400276-508		. DOOR ASSY-SINGLE used on 070E (25415101J), 070C (25415101K), 070D(25415101M), 070B (25415101N) SEE 25-41-51-01J FOR NHA SEE 25-41-51-01K FOR NHA SEE 25-41-51-01M FOR NHA SEE 25-41-51-01N FOR NHA		RF
-001F	A225400276-900		. DOOR ASSY-SINGLE used on 070F (25415101J) SEE 25-41-51-01J FOR NHA		RF
-001G	A225400276-504		. DOOR ASSY-SINGLE used on 070G (25415101J), 070A (25415101P) SEE 25-41-51-01J FOR NHA SEE 25-41-51-01P FOR NHA		RF
-001H	A225400276-904		. DOOR ASSY-SINGLE used on 070H (25415101J), 070G (25415142B), 070K(25415142D), 070K (25415142N), 070A (25415142U) SEE 25-41-51-01J FOR NHA SEE 25-41-51-42B FOR NHA SEE 25-41-51-42D FOR NHA SEE 25-41-51-42N FOR NHA SEE 25-41-51-42U FOR NHA		RF
-001J	A225400276-910		. DOOR ASSY-SINGLE used on 070J (25415101J) SEE 25-41-51-01J FOR NHA		RF

- ITEM NOT ILLUSTRATED

FIG. ITEM	PART NUMBER	AIRLINE STOCK NUMBER	NOMENCLATURE 1234567	EFF CODE	UNITS PER ASSY
-001K	A225400276-542		. DOOR ASSY-SINGLE used on 070A (25415101K), 070F (25415101P), 070H(25415101Y), 070A (25415141R) SEE 25-41-51-01K FOR NHA SEE 25-41-51-01P FOR NHA SEE 25-41-51-01Y FOR NHA SEE 25-41-51-41R FOR NHA		RF
-001L	A225400276-500		. DOOR ASSY-SINGLE used on 070B (25415101K) SEE 25-41-51-01K FOR NHA		RF
010A	A225400272-000		. . HINGE used on 001A		001
-010B	A225400272-008		. . HINGE used on 001B, 001C, 001D, 001E, 001F, 001G, 001H, 001J, 001K, 001L		001
020A	AN565B6H4		. . . SETSCREW used on 010A, 010B		002
030A	NAS514P832-6		. . SCREW used on 001A		019
031A	NAS514P832-6		. . SCREW used on 001B, 001C, 001D, 001E, 001F, 001G, 001H, 001J, 001K, 001L		018
040A	0-123-000700000		. . WASHER used on 001A, 001B, 001C, 001D, 001E, 001F, 001G, 001H, 001J, 001K, 001L		015

- ITEM NOT ILLUSTRATED

FIG. ITEM	PART NUMBER	AIRLINE STOCK NUMBER	NOMENCLATURE 1234567	EFF CODE	UNITS PER ASSY
050A	DAN316-3025		. . SCREW used on 001A, 001B, 001C, 001D, 001E, 001F, 001G, 001H, 001J, 001K, 001L		026
060A	A225400272-202		. . SECTION used on 001A, 001B, 001C, 001D, 001E, 001F, 001G, 001H, 001J, 001K, 001L		002
070A	A225400272-205		. . SECTION used on 001A, 001B, 001C, 001D, 001E, 001F, 001G, 001H, 001J, 001K, 001L		001
080A	NAS514P632-6		. . SCREW used on 001A, 001B, 001C, 001D, 001E, 001F, 001G, 001H, 001J, 001K, 001L		001
090A	AR197-3		. . HOOK-COAT used on 001A, 001B, 001C, 001D, 001E, 001F, 001G, 001H, 001J, 001K, 001L		001
-100A	5472R		. . LATCH-LAVATORY SIMPLE DOOR RPLD BY 100B used on 001A, 001B, 001C, 001D, 001E, 001F, 001G, 001H, 001J, 001K, 001L		001
100B	A8-254-2015-011		. . LATCH-LAVATORY SIMPLE DOOR RPLS 100A used on 001A, 001B, 001C, 001D, 001E, 001F, 001G, 001H, 001J, 001K, 001L		001

- ITEM NOT ILLUSTRATED

FIG. ITEM	PART NUMBER	AIRLINE STOCK NUMBER	NOMENCLATURE 1234567	EFF CODE	UNITS PER ASSY
102A	A8-254-2015-951		. . . LOCK used on 100B		001
104A	A8-254-2015-931		. . . RELEASE SYSTEM used on 100B		001
106A	A8-254-2014-941		. . . KNOB used on 100B		001
120A	5L0044600109000		. . BOLT-THREADED used on 001A, 001B, 001C, 001D, 001E, 001F, 001G, 001H, 001J, 001K, 001L		001
130A	1A113-0139-1		. . ASHTRAY ASSY used on 001A, 001B, 001C, 001D, 001E, 001F, 001G, 001H, 001J, 001K, 001L		002
-133A	1A113-0139-101		. . . COVER-ASHTRAY used on 130A		001
-135A	1A113-0139-103		. . . CASE-ASHTRAY used on 130A		001
140A	2863		. . LATCH ASSY 80477 used on 001A, 001B, 001C, 001D, 001E, 001G, 001K, 001L		001
145A	AM767B		. . LATCH ASSY used on 001F, 001H, 001J		001
150A	A225400216-222		. . PLATE-SCUFF used on 001A, 001B, 001C, 001D, 001E, 001F, 001G, 001H, 001J, 001K, 001L		001
160A	F2547242620000		. . OUTLET-AIR used on 001A, 001B, 001C, 001D, 001E, 001F, 001G, 001H, 001J, 001K, 001L		004

- ITEM NOT ILLUSTRATED

FIG. ITEM	PART NUMBER	AIRLINE STOCK NUMBER	NOMENCLATURE 1234567	EFF CODE	UNITS PER ASSY
170A	ABS0706-25-16		. . SCREW used on 001A, 001B, 001C, 001D, 001E, 001F, 001G, 001H, 001J, 001K, 001L		008

- ITEM NOT ILLUSTRATED

THIS PAGE IS INTENTIONALLY LEFT BLANK

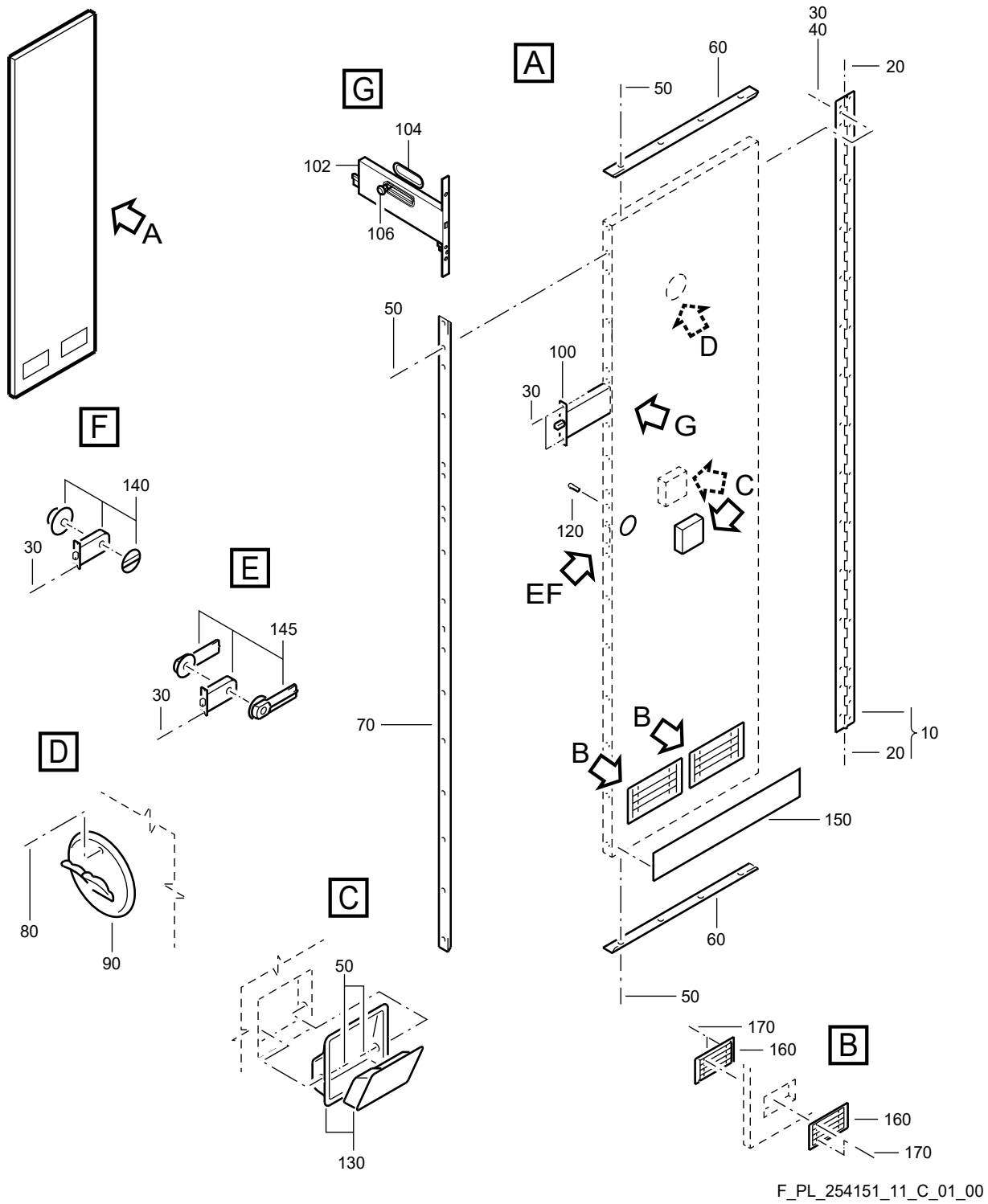

F_PL_254151_11_C_01_00

DOOR ASSY-SINGLE
Figure 11C/EN254151SHEET11C01

FIG. ITEM	PART NUMBER	AIRLINE STOCK NUMBER	NOMENCLATURE 1234567	EFF CODE	UNITS PER ASSY
11C					
-001A	A225400276-544		. DOOR ASSY-SINGLE used on 070F (25415101K), 070G (25415101L), 070D (25415101S) SEE 25-41-51-01K FOR NHA SEE 25-41-51-01L FOR NHA SEE 25-41-51-01S FOR NHA		RF
-001B	A225400276-908		. DOOR ASSY-SINGLE used on 070G (25415101K), 070F (25415101M), 070J (25415101Q) SEE 25-41-51-01K FOR NHA SEE 25-41-51-01M FOR NHA SEE 25-41-51-01Q FOR NHA		RF
-001C	A225400276-536		. DOOR ASSY-SINGLE used on 070D (25415101K), 070H (25415101M), 070B (25415101Q) SEE 25-41-51-01K FOR NHA SEE 25-41-51-01M FOR NHA SEE 25-41-51-01Q FOR NHA		RF
-001D	A225400276-546		. DOOR ASSY-SINGLE used on 070K (25415101J), 070E (25415101P), 070K(25415101V) SEE 25-41-51-01J FOR NHA SEE 25-41-51-01P FOR NHA SEE 25-41-51-01V FOR NHA		RF
-001E	A225400276-512		. DOOR ASSY-SINGLE used on 070D (25415101N), 070C (25415101Q), 070B (25415101R) SEE 25-41-51-01N FOR NHA SEE 25-41-51-01Q FOR NHA SEE 25-41-51-01R FOR NHA		RF

- ITEM NOT ILLUSTRATED

FIG. ITEM	PART NUMBER	AIRLINE STOCK NUMBER	NOMENCLATURE 1234567	EFF CODE	UNITS PER ASSY
-001F	A225400276-906		. DOOR ASSY-SINGLE used on 070B (25415101L), 070C (25415101M), 070J(25415101P), 070J (25415101T) SEE 25-41-51-01L FOR NHA SEE 25-41-51-01M FOR NHA SEE 25-41-51-01P FOR NHA SEE 25-41-51-01T FOR NHA		RF
-001G	A225400276-548		. DOOR ASSY-SINGLE used on 070C (25415101L) SEE 25-41-51-01L FOR NHA		RF
-001H	A225400276-538		. DOOR ASSY-SINGLE used on 070D (25415101L) SEE 25-41-51-01L FOR NHA		RF
-001J	A225400276-528		. DOOR ASSY-SINGLE used on 070A (25415101M), 070A (25415101U) SEE 25-41-51-01M FOR NHA SEE 25-41-51-01U FOR NHA		RF
-001K	A225400276-550		. DOOR ASSY-SINGLE used on 070B (25415101M) SEE 25-41-51-01M FOR NHA		RF
-001L	A225400276-914		. DOOR ASSY-SINGLE used on 070E (25415101M) SEE 25-41-51-01M FOR NHA		RF
-001M	A225400276-552		. DOOR ASSY-SINGLE used on 070E (25415141B) SEE 25-41-51-41B FOR NHA		RF
-001N	A2254002768512		. DOOR ASSY-SINGLE POST SB 25-1314 used on 070A (25415101L) SEE 25-41-51-01L FOR NHA		RF

- ITEM NOT ILLUSTRATED

FIG. ITEM	PART NUMBER	AIRLINE STOCK NUMBER	NOMENCLATURE 1234567	EFF CODE	UNITS PER ASSY
010A	A225400272-008		. . HINGE used on 001A, 001B, 001C, 001D, 001E, 001F, 001G, 001H, 001J, 001K, 001L, 001M, 001N		001
020A	AN565B6H4		. . . SETSCREW used on 010A		002
030A	NAS514P832-6		. . SCREW used on 001A, 001B, 001C, 001D, 001E, 001F, 001G, 001H, 001J, 001K, 001L, 001M, 001N		018
040A	0-123-000700000		. . WASHER used on 001A, 001B, 001C, 001D, 001E, 001F, 001G, 001H, 001J, 001K, 001L, 001M, 001N		015
050A	DAN316-3025		. . SCREW used on 001A, 001B, 001C, 001D, 001E, 001F, 001G, 001H, 001J, 001K, 001L, 001M, 001N		026
060A	A225400272-202		. . SECTION used on 001A, 001B, 001C, 001D, 001E, 001F, 001G, 001H, 001J, 001K, 001L, 001M, 001N		002
070A	A225400272-205		. . SECTION used on 001A, 001B, 001C, 001D, 001E, 001F, 001G, 001H, 001J, 001K, 001L, 001M, 001N		001
080A	NAS514P632-6		. . SCREW used on 001A, 001B, 001C, 001D, 001E, 001F, 001G, 001H, 001J, 001K, 001L, 001M, 001N		001

- ITEM NOT ILLUSTRATED

FIG. ITEM	PART NUMBER	AIRLINE STOCK NUMBER	NOMENCLATURE 1234567	EFF CODE	UNITS PER ASSY
090A	AR197-3		. . HOOK-COAT used on 001A, 001B, 001C, 001D, 001E, 001F, 001G, 001H, 001J, 001K, 001L, 001M, 001N		001
-100A	5472R		. . LATCH-LAVATORY SIMPLE DOOR RPLD BY 100B used on 001A, 001B, 001C, 001D, 001E, 001F, 001G, 001H, 001J, 001K, 001L, 001M, 001N		001
100B	A8-254-2015-011		. . LATCH-LAVATORY SIMPLE DOOR RPLS 100A used on 001A, 001B, 001C, 001D, 001E, 001F, 001G, 001H, 001J, 001K, 001L, 001M, 001N		001
102A	A8-254-2015-951		. . . LOCK used on 100B		001
104A	A8-254-2015-931		. . . RELEASE SYSTEM used on 100B		001
106A	A8-254-2014-941		. . . KNOB used on 100B		001
120A	5L0044600109000		. . BOLT-THREADED used on 001A, 001B, 001C, 001D, 001E, 001F, 001G, 001H, 001J, 001K, 001L, 001M, 001N		001
130A	1A113-0139-1		. . ASHTRAY ASSY used on 001A, 001B, 001C, 001D, 001E, 001F, 001G, 001H, 001J, 001K, 001L, 001M, 001N		002
-133A	1A113-0139-101		. . . COVER-ASHTRAY used on 130A		001

- ITEM NOT ILLUSTRATED

FIG. ITEM	PART NUMBER	AIRLINE STOCK NUMBER	NOMENCLATURE 1234567	EFF CODE	UNITS PER ASSY
-135A	1A113-0139-103		. . . CASE-ASHTRAY used on 130A		001
140A	2863		. . LATCH ASSY 80477 used on 001A, 001C, 001D, 001E, 001G, 001H, 001J, 001K, 001M, 001N		001
145A	AM767B		. . LATCH ASSY used on 001B, 001F, 001L		001
150A	A225400216-222		. . PLATE-SCUFF used on 001A, 001B, 001C, 001D, 001E, 001F, 001G, 001H, 001J, 001K, 001L, 001M, 001N		001
160A	F2547242620000		. . OUTLET-AIR used on 001A, 001B, 001C, 001D, 001E, 001F, 001G, 001H, 001J, 001K, 001L, 001M, 001N		004
170A	ABS0706-25-16		. . SCREW used on 001A, 001B, 001C, 001D, 001E, 001F, 001G, 001H, 001J, 001K, 001L, 001M, 001N		008

- ITEM NOT ILLUSTRATED

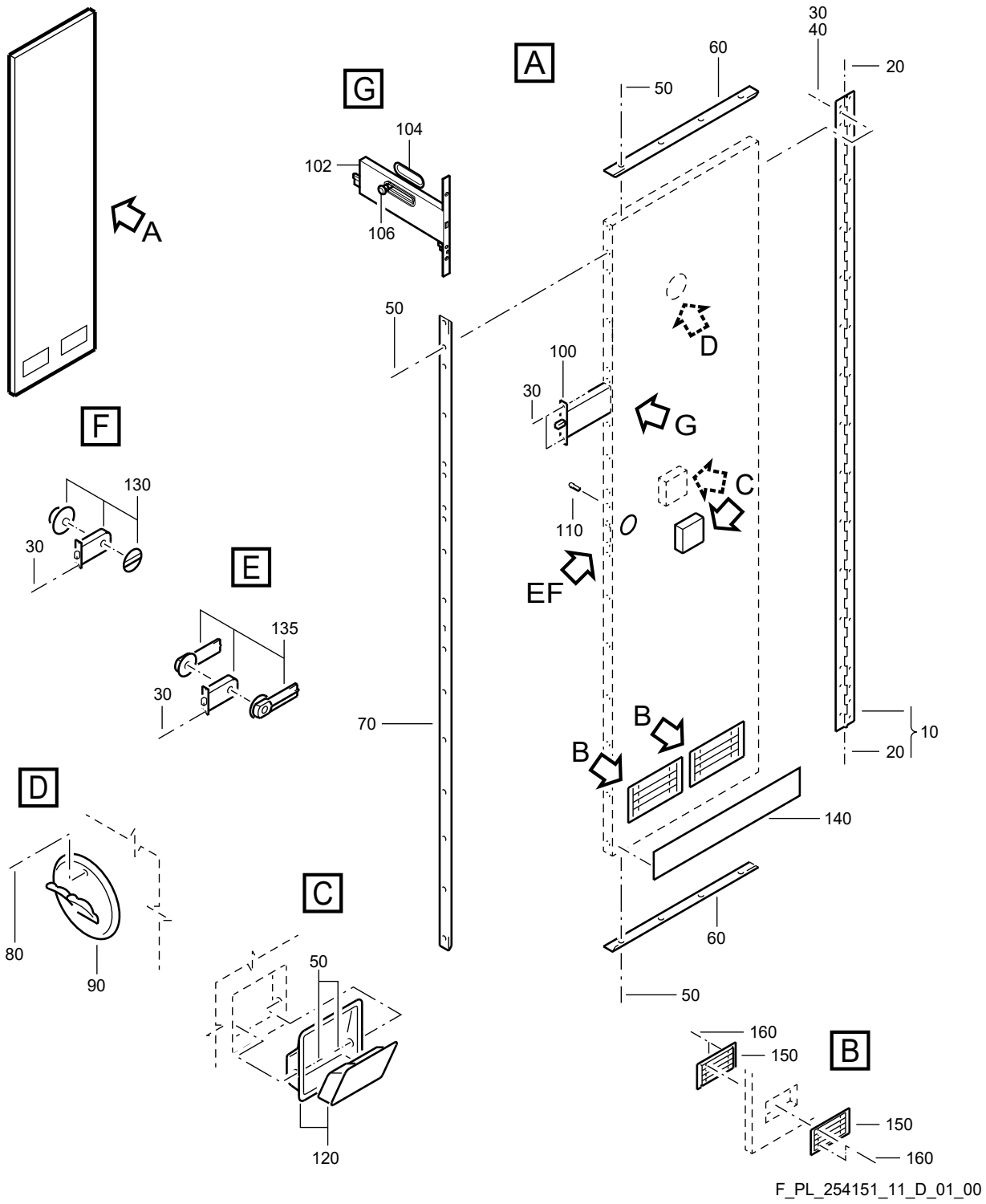

DOOR ASSY-SINGLE
Figure 11D/EN254151SHEET11D01

FIG. ITEM	PART NUMBER	AIRLINE STOCK NUMBER	NOMENCLATURE 1234567	EFF CODE	UNITS PER ASSY
11D					
-001A	A225400276-514		. DOOR ASSY-SINGLE used on 070G (25415101M), 070E (25415141Z), 070A (25415142L) SEE 25-41-51-01M FOR NHA SEE 25-41-51-41Z FOR NHA SEE 25-41-51-42L FOR NHA		RF
-001B	A225400276-506		. DOOR ASSY-SINGLE used on 070K (25415101N), 070G (25415101Q) SEE 25-41-51-01N FOR NHA SEE 25-41-51-01Q FOR NHA		RF
-001C	A225400276-554		. DOOR ASSY-SINGLE used on 070F (25415101S), 070L (254151410) SEE 25-41-51-01S FOR NHA SEE 25-41-51-410 FOR NHA		RF
-001D	A225400276-556		. DOOR ASSY-SINGLE used on 070G (25415101N) SEE 25-41-51-01N FOR NHA		RF
-001E	A225400276-920		. DOOR ASSY-SINGLE used on 070H (25415101N) SEE 25-41-51-01N FOR NHA		RF
-001F	A225400276-918		. DOOR ASSY-SINGLE used on 070F (25415101N) SEE 25-41-51-01N FOR NHA		RF
-001G	A225400276-534		. DOOR ASSY-SINGLE used on 070B (25415101P) SEE 25-41-51-01P FOR NHA		RF
-001H	A225400276-916		. DOOR ASSY-SINGLE used on 070C (25415101P) SEE 25-41-51-01P FOR NHA		RF

- ITEM NOT ILLUSTRATED

FIG. ITEM	PART NUMBER	AIRLINE STOCK NUMBER	NOMENCLATURE 1234567	EFF CODE	UNITS PER ASSY
-001J	A225400276-558		. DOOR ASSY-SINGLE used on 070G (25415101P), 070K (25415101X) SEE 25-41-51-01P FOR NHA SEE 25-41-51-01X FOR NHA		RF
-001K	A225400276-526		. DOOR ASSY-SINGLE used on 070A (25415101R) SEE 25-41-51-01R FOR NHA		RF
-001L	A225400276-562		. DOOR ASSY-SINGLE used on 070K (25415101Q), 070B (25415141K), 070G (25415141R), 070A (25415141X), 070D (25415142J) SEE 25-41-51-01Q FOR NHA SEE 25-41-51-41K FOR NHA SEE 25-41-51-41R FOR NHA SEE 25-41-51-41X FOR NHA SEE 25-41-51-42J FOR NHA		RF

- ITEM NOT ILLUSTRATED

FIG. ITEM	PART NUMBER	AIRLINE STOCK NUMBER	NOMENCLATURE 1234567	EFF CODE	UNITS PER ASSY
-001M	A225400276-932		. DOOR ASSY-SINGLE PRE VSB A2-254-25-039 used on 070H (25415101Q), 070K (25415101U), 070C (25415101X), 070F (25415101Y), 070E (25415141C), 070A (25415141F), 070J (25415141H), 070H (25415141N), 070B (25415141W), 070C (25415141X), 070B (254151420) SEE 25-41-51-01Q FOR NHA SEE 25-41-51-01U FOR NHA SEE 25-41-51-01X FOR NHA SEE 25-41-51-01Y FOR NHA SEE 25-41-51-41C FOR NHA SEE 25-41-51-41F FOR NHA SEE 25-41-51-41H FOR NHA SEE 25-41-51-41N FOR NHA SEE 25-41-51-41W FOR NHA SEE 25-41-51-41X FOR NHA SEE 25-41-51-420 FOR NHA		RF
-001N	A225400276-990		. DOOR ASSY-SINGLE POST VSB A2-254-25-039 used on 070N (25415141H), 070L (25415141N) SEE 25-41-51-41H FOR NHA SEE 25-41-51-41N FOR NHA		RF
010A	A225400272-008		. . HINGE used on 001A, 001B, 001C, 001D, 001E, 001F, 001G, 001H, 001J, 001K, 001L, 001M, 001N		001
020A	AN565B6H4		. . . SETSCREW used on 010A		002

- ITEM NOT ILLUSTRATED

FIG. ITEM	PART NUMBER	AIRLINE STOCK NUMBER	NOMENCLATURE 1234567	EFF CODE	UNITS PER ASSY
030A	NAS514P832-6		. . SCREW used on 001A, 001B, 001C, 001D, 001E, 001F, 001G, 001H, 001J, 001K, 001L, 001M, 001N		018
040A	0-123-000700000		. . WASHER used on 001A, 001B, 001C, 001D, 001E, 001F, 001G, 001H, 001J, 001K, 001L, 001M, 001N		015
050A	DAN316-3025		. . SCREW used on 001A, 001B, 001C, 001D, 001E, 001F, 001G, 001H, 001J, 001K, 001L, 001M, 001N		026
060A	A225400272-202		. . SECTION used on 001A, 001B, 001C, 001D, 001E, 001F, 001G, 001H, 001J, 001K, 001L, 001M, 001N		002
070A	A225400272-205		. . SECTION used on 001A, 001B, 001C, 001D, 001E, 001F, 001G, 001H, 001J, 001K, 001L, 001M, 001N		001
080A	NAS514P632-6		. . SCREW used on 001A, 001B, 001C, 001D, 001E, 001F, 001G, 001H, 001J, 001K, 001L, 001M, 001N		001
090A	AR197-3		. . HOOK-COAT used on 001A, 001B, 001C, 001D, 001E, 001F, 001G, 001H, 001J, 001K, 001L, 001M, 001N		001

- ITEM NOT ILLUSTRATED

FIG. ITEM	PART NUMBER	AIRLINE STOCK NUMBER	NOMENCLATURE 1234567	EFF CODE	UNITS PER ASSY
-100A	5472R		. . LATCH-LAVATORY SIMPLE DOOR RPLD BY 100B PRE VSB A2-254-25-039 used on 001A, 001B, 001C, 001D, 001E, 001F, 001G, 001H, 001J, 001K, 001L, 001M		001
100B	A8-254-2015-011		. . LATCH-LAVATORY SIMPLE DOOR RPLS 100A POST VSB A2-254-25-039 used on 001A, 001B, 001C, 001D, 001E, 001F, 001G, 001H, 001J, 001K, 001L, 001M, 001N		001
102A	A8-254-2015-951		. . . LOCK used on 100B		001
104A	A8-254-2015-931		. . . RELEASE SYSTEM used on 100B		001
106A	A8-254-2014-941		. . . KNOB used on 100B		001
110A	5L0044600109000		. . BOLT-THREADED used on 001A, 001B, 001C, 001D, 001E, 001F, 001G, 001H, 001J, 001K, 001L, 001M, 001N		001
120A	1A113-0139-1		. . ASHTRAY ASSY used on 001A, 001B, 001C, 001D, 001E, 001F, 001G, 001H, 001J, 001K, 001L, 001M, 001N		002
-123A	1A113-0139-101		. . . COVER-ASHTRAY used on 120A		001
-125A	1A113-0139-103		. . . CASE-ASHTRAY used on 120A		001

- ITEM NOT ILLUSTRATED

FIG. ITEM	PART NUMBER	AIRLINE STOCK NUMBER	NOMENCLATURE 1234567	EFF CODE	UNITS PER ASSY
130A	2863		. . LATCH ASSY 80477 used on 001A, 001B, 001C, 001D, 001G, 001J, 001K, 001L		001
135A	AM767B		. . LATCH ASSY used on 001E, 001F, 001H, 001M, 001N		001
140A	A225400216-222		. . PLATE-SCUFF used on 001A, 001B, 001C, 001D, 001E, 001F, 001G, 001H, 001J, 001K, 001L, 001M, 001N		001
150A	F2547242620000		. . OUTLET-AIR used on 001A, 001B, 001C, 001D, 001E, 001F, 001G, 001H, 001J, 001K, 001L, 001M, 001N		004
160A	ABS0706-25-16		. . SCREW used on 001A, 001B, 001C, 001D, 001E, 001F, 001G, 001H, 001J, 001K, 001L, 001M, 001N		008

- ITEM NOT ILLUSTRATED

THIS PAGE IS INTENTIONALLY LEFT BLANK

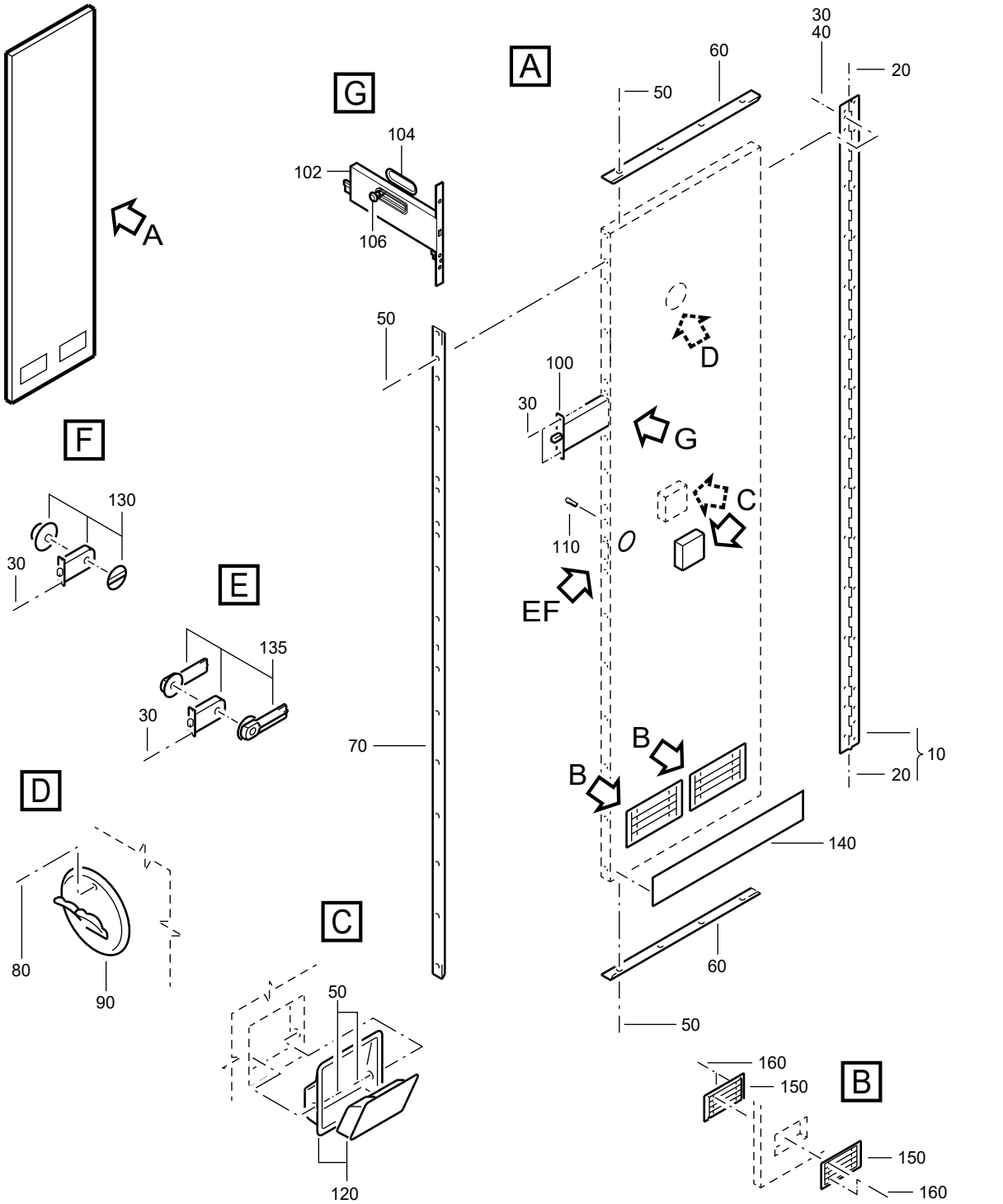

DOOR ASSY-SINGLE
Figure 11E/EN254151SHEET11E01

FIG. ITEM	PART NUMBER	AIRLINE STOCK NUMBER	NOMENCLATURE 1234567	EFF CODE	UNITS PER ASSY
11E					
-001A	A225400276-564		. DOOR ASSY-SINGLE used on 070F (25415101Q), 070A (25415141B) SEE 25-41-51-01Q FOR NHA SEE 25-41-51-41B FOR NHA		RF
-001B	A225400276-560		. DOOR ASSY-SINGLE used on 070J (25415101S) SEE 25-41-51-01S FOR NHA		RF
-001C	A225400276-926		. DOOR ASSY-SINGLE used on 070B (25415101T), 070B (25415141D), 070C(25415141K), 070C (25415141M) SEE 25-41-51-01T FOR NHA SEE 25-41-51-41D FOR NHA SEE 25-41-51-41K FOR NHA SEE 25-41-51-41M FOR NHA		RF

- ITEM NOT ILLUSTRATED

FIG. ITEM	PART NUMBER	AIRLINE STOCK NUMBER	NOMENCLATURE 1234567	EFF CODE	UNITS PER ASSY
-001D	A225400276-570		. DOOR ASSY-SINGLE used on 070C (25415101T), 070G (25415101V), 070J (25415141B), 070H (25415141D), 070J (25415141G), 070G(25415141K), 070H (25415141M), 070C (25415141N), 070C(25415141T), 070D (25415141W), 070E (25415141X), 070A(254151420), 070H (25415142E) SEE 25-41-51-01T FOR NHA SEE 25-41-51-01V FOR NHA SEE 25-41-51-41B FOR NHA SEE 25-41-51-41D FOR NHA SEE 25-41-51-41G FOR NHA SEE 25-41-51-41K FOR NHA SEE 25-41-51-41M FOR NHA SEE 25-41-51-41N FOR NHA SEE 25-41-51-41T FOR NHA SEE 25-41-51-41W FOR NHA SEE 25-41-51-41X FOR NHA SEE 25-41-51-420 FOR NHA SEE 25-41-51-42E FOR NHA		RF

- ITEM NOT ILLUSTRATED

FIG. ITEM	PART NUMBER	AIRLINE STOCK NUMBER	NOMENCLATURE 1234567	EFF CODE	UNITS PER ASSY
-001E	A225400276-924		. DOOR ASSY-SINGLE used on 070D (25415101T), 070E (254151410), 070D(25415141A), 070C (25415141H), 070B (25415141M), 070B(25415141N), 070J (25415142E), 070K (25415142J), 070J(25415142K), 070B (25415142N), 070J (25415142R) SEE 25-41-51-01T FOR NHA SEE 25-41-51-410 FOR NHA SEE 25-41-51-41A FOR NHA SEE 25-41-51-41H FOR NHA SEE 25-41-51-41M FOR NHA SEE 25-41-51-41N FOR NHA SEE 25-41-51-42E FOR NHA SEE 25-41-51-42J FOR NHA SEE 25-41-51-42K FOR NHA SEE 25-41-51-42N FOR NHA SEE 25-41-51-42R FOR NHA		RF
-001F	A225400276-566		. DOOR ASSY-SINGLE used on 070E (25415101T), 070D (25415101U) SEE 25-41-51-01T FOR NHA SEE 25-41-51-01U FOR NHA		RF

- ITEM NOT ILLUSTRATED

FIG. ITEM	PART NUMBER	AIRLINE STOCK NUMBER	NOMENCLATURE 1234567	EFF CODE	UNITS PER ASSY
-001G	A225400276-576		. DOOR ASSY-SINGLE PRE VSB A2-254-25-039 used on 070F (25415101T), 070E (25415101V), 070H(25415141C), 070L (25415141D), 070H (25415141H), 070E(25415141K), 070L (25415141R), 070J (25415141W), 070E(25415142E), 070D (25415142P) SEE 25-41-51-01T FOR NHA SEE 25-41-51-01V FOR NHA SEE 25-41-51-41C FOR NHA SEE 25-41-51-41D FOR NHA SEE 25-41-51-41H FOR NHA SEE 25-41-51-41K FOR NHA SEE 25-41-51-41R FOR NHA SEE 25-41-51-41W FOR NHA SEE 25-41-51-42E FOR NHA SEE 25-41-51-42P FOR NHA		RF
-001H	A225400276-586		. DOOR ASSY-SINGLE used on 070E (25415101S), 070A (25415101V), 070H(254151410), 070A (25415141A), 070B (25415141S), 070D(25415141T) SEE 25-41-51-01S FOR NHA SEE 25-41-51-01V FOR NHA SEE 25-41-51-410 FOR NHA SEE 25-41-51-41A FOR NHA SEE 25-41-51-41S FOR NHA SEE 25-41-51-41T FOR NHA		RF
-001J	A225400276-572		. DOOR ASSY-SINGLE used on 070B (25415101U) SEE 25-41-51-01U FOR NHA		RF

- ITEM NOT ILLUSTRATED

FIG. ITEM	PART NUMBER	AIRLINE STOCK NUMBER	NOMENCLATURE 1234567	EFF CODE	UNITS PER ASSY
-001K	A225400276-592		. DOOR ASSY-SINGLE used on 070H (25415101L), 070H (25415101V), 070A(25415101W), 070A (25415101X), 070C (25415101Y), 070A(25415141C), 070G (25415141F), 070E (25415141G), 070G(25415141H), 070G (25415141M), 070F (25415141R), 070K(25415141X) SEE 25-41-51-01L FOR NHA SEE 25-41-51-01V FOR NHA SEE 25-41-51-01W FOR NHA SEE 25-41-51-01X FOR NHA SEE 25-41-51-01Y FOR NHA SEE 25-41-51-41C FOR NHA SEE 25-41-51-41F FOR NHA SEE 25-41-51-41G FOR NHA SEE 25-41-51-41H FOR NHA SEE 25-41-51-41M FOR NHA SEE 25-41-51-41R FOR NHA SEE 25-41-51-41X FOR NHA		RF

- ITEM NOT ILLUSTRATED

FIG. ITEM	PART NUMBER	AIRLINE STOCK NUMBER	NOMENCLATURE 1234567	EFF CODE	UNITS PER ASSY
-001L	A225400276-590		. DOOR ASSY-SINGLE used on 070D (25415101Q), 070H (25415101T), 070L (25415101V), 070G (25415101W), 070B (25415101Y), 070H(25415141B), 070J (25415141D), 070H (25415141G), 070F(25415141H), 070F (25415141M), 070D (25415141N), 070F(25415141W), 070F (25415141X) SEE 25-41-51-01Q FOR NHA SEE 25-41-51-01T FOR NHA SEE 25-41-51-01V FOR NHA SEE 25-41-51-01W FOR NHA SEE 25-41-51-01Y FOR NHA SEE 25-41-51-41B FOR NHA SEE 25-41-51-41D FOR NHA SEE 25-41-51-41G FOR NHA SEE 25-41-51-41H FOR NHA SEE 25-41-51-41M FOR NHA SEE 25-41-51-41N FOR NHA SEE 25-41-51-41W FOR NHA SEE 25-41-51-41X FOR NHA		RF

- ITEM NOT ILLUSTRATED

FIG. ITEM	PART NUMBER	AIRLINE STOCK NUMBER	NOMENCLATURE 1234567	EFF CODE	UNITS PER ASSY
-001M	A225400276-574		. DOOR ASSY-SINGLE used on 070K (25415101P), 070H (25415101S), 070E (25415101U), 070B (25415101V), 070E (25415101X), 070A (25415101Y), 070D (25415101Z), 070G (25415141D), 070B (25415141F), 070M (25415141G), 070E (25415141H), 070J(25415141M), 070C (25415141V), 070L (25415142D), 070F(25415142E), 070K (25415142G), 070H (25415142L), 070J(25415142N), 070C (25415142T) SEE 25-41-51-01P FOR NHA SEE 25-41-51-01S FOR NHA SEE 25-41-51-01U FOR NHA SEE 25-41-51-01V FOR NHA SEE 25-41-51-01X FOR NHA SEE 25-41-51-01Y FOR NHA SEE 25-41-51-01Z FOR NHA SEE 25-41-51-41D FOR NHA SEE 25-41-51-41F FOR NHA SEE 25-41-51-41G FOR NHA SEE 25-41-51-41H FOR NHA SEE 25-41-51-41M FOR NHA SEE 25-41-51-41V FOR NHA SEE 25-41-51-42D FOR NHA SEE 25-41-51-42E FOR NHA SEE 25-41-51-42G FOR NHA SEE 25-41-51-42L FOR NHA SEE 25-41-51-42N FOR NHA SEE 25-41-51-42T FOR NHA		RF
-001N	A225400276-992		. DOOR ASSY-SINGLE POST VSB A2-254-25-039 used on 070P (25415141H) SEE 25-41-51-41H FOR NHA		RF

- ITEM NOT ILLUSTRATED

FIG. ITEM	PART NUMBER	AIRLINE STOCK NUMBER	NOMENCLATURE 1234567	EFF CODE	UNITS PER ASSY
010A	A225400272-008		. . HINGE used on 001A, 001B, 001C, 001D, 001E, 001F, 001G, 001H, 001J, 001K, 001L, 001M, 001N		001
020A	AN565B6H4		. . . SETSCREW used on 010A		002
030A	NAS514P832-6		. . SCREW used on 001A, 001B, 001C, 001D, 001E, 001F, 001G, 001H, 001J, 001K, 001L, 001M, 001N		018
040A	0-123-000700000		. . WASHER used on 001A, 001B, 001C, 001D, 001E, 001F, 001G, 001H, 001J, 001K, 001L, 001M, 001N		015
050A	DAN316-3025		. . SCREW used on 001A, 001B, 001C, 001D, 001E, 001F, 001G, 001H, 001J, 001K, 001L, 001M, 001N		026
060A	A225400272-202		. . SECTION used on 001A, 001B, 001C, 001D, 001E, 001F, 001G, 001H, 001J, 001K, 001L, 001M, 001N		002
070A	A225400272-205		. . SECTION used on 001A, 001B, 001C, 001D, 001E, 001F, 001G, 001H, 001J, 001K, 001L, 001M, 001N		001
080A	NAS514P632-6		. . SCREW used on 001A, 001B, 001C, 001D, 001E, 001F, 001G, 001H, 001J, 001K, 001L, 001M, 001N		001

- ITEM NOT ILLUSTRATED

FIG. ITEM	PART NUMBER	AIRLINE STOCK NUMBER	NOMENCLATURE 1234567	EFF CODE	UNITS PER ASSY
090A	AR197-3		. . HOOK-COAT used on 001A, 001B, 001C, 001D, 001E, 001F, 001G, 001H, 001J, 001K, 001L, 001M, 001N		001
-100A	5472R		. . LATCH-LAVATORY SIMPLE DOOR RPLD BY 100B PRE VSB A2-254-25-039 used on 001A, 001B, 001C, 001D, 001E, 001F, 001G, 001H, 001J, 001K, 001L, 001M		001
100B	A8-254-2015-011		. . LATCH-LAVATORY SIMPLE DOOR RPLS 100A POST VSB A2-254-25-039 used on 001A, 001B, 001C, 001D, 001E, 001F, 001G, 001H, 001J, 001K, 001L, 001M, 001N		001
102A	A8-254-2015-951		. . . LOCK used on 100B		001
104A	A8-254-2015-931		. . . RELEASE SYSTEM used on 100B		001
106A	A8-254-2014-941		. . . KNOB used on 100B		001
110A	5L0044600109000		. . BOLT-THREADED used on 001A, 001B, 001C, 001D, 001E, 001F, 001G, 001H, 001J, 001K, 001L, 001M, 001N		001
120A	1A113-0139-1		. . ASHTRAY ASSY used on 001A, 001B, 001C, 001D, 001E, 001F, 001G, 001H, 001J, 001K, 001L, 001M, 001N		002

- ITEM NOT ILLUSTRATED

FIG. ITEM	PART NUMBER	AIRLINE STOCK NUMBER	NOMENCLATURE 1234567	EFF CODE	UNITS PER ASSY
-123A	1A113-0139-101		. . . COVER-ASHTRAY used on 120A		001
-125A	1A113-0139-103		. . . CASE-ASHTRAY used on 120A		001
130A	2863		. . LATCH ASSY 80477 used on 001A, 001B, 001D, 001F, 001G, 001H, 001J, 001K, 001L, 001M, 001N		001
135A	AM767B		. . LATCH ASSY used on 001C, 001E		001
140A	A225400216-210		. . PLATE-SCUFF used on 001B		001
-140B	A225400216-222		. . PLATE-SCUFF used on 001A, 001C, 001D, 001E, 001F, 001G, 001H, 001J, 001K, 001L, 001M, 001N		001
150A	F2547242620000		. . OUTLET-AIR used on 001A, 001B, 001C, 001D, 001E, 001F, 001G, 001H, 001J, 001K, 001L, 001M, 001N		004
160A	ABS0706-25-16		. . SCREW used on 001A, 001B, 001C, 001D, 001E, 001F, 001G, 001H, 001J, 001K, 001L, 001M, 001N		008

- ITEM NOT ILLUSTRATED

THIS PAGE IS INTENTIONALLY LEFT BLANK

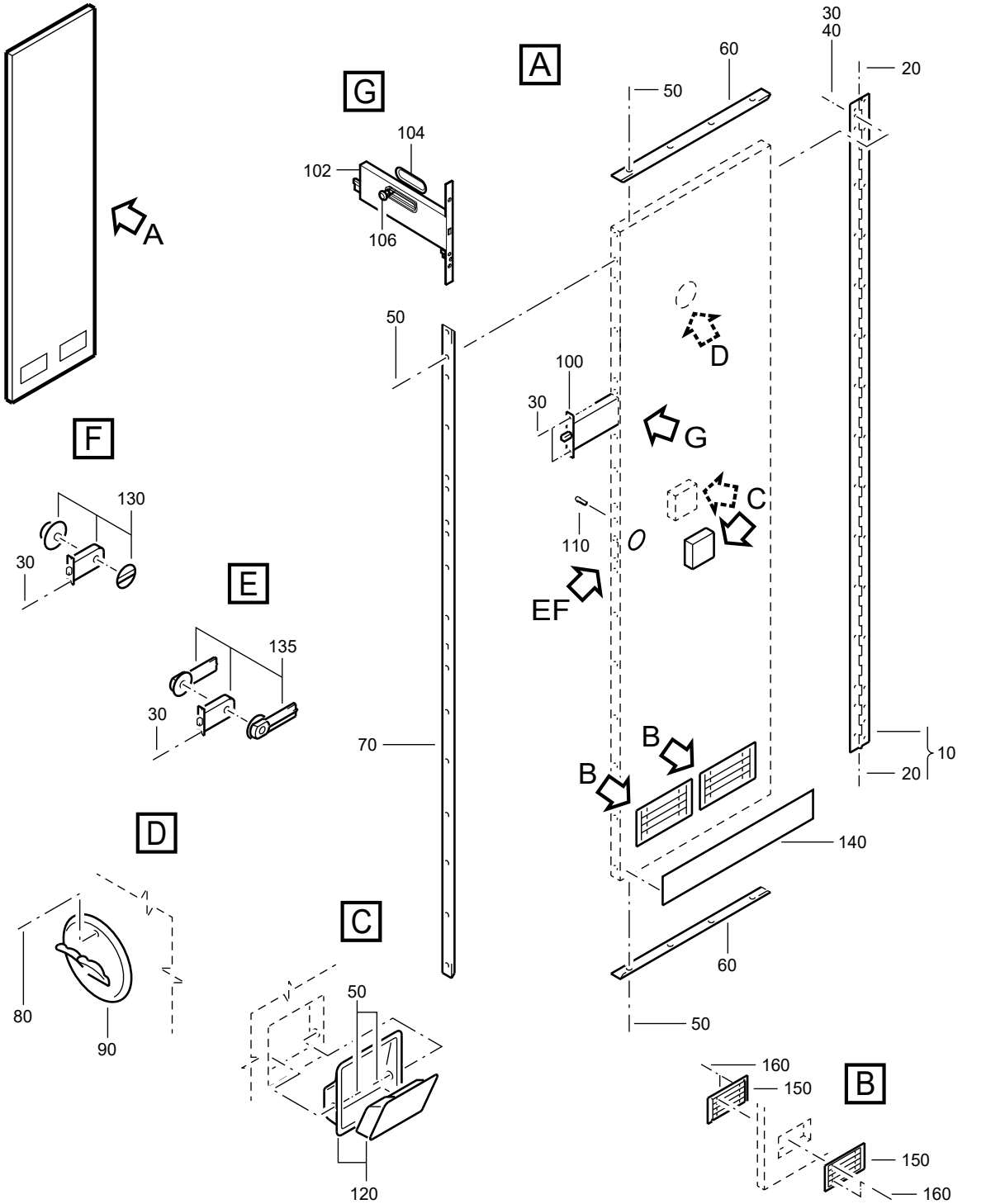

DOOR ASSY-SINGLE
Figure 11F/EN254151SHEET11F01

FIG. ITEM	PART NUMBER	AIRLINE STOCK NUMBER	NOMENCLATURE 1234567	EFF CODE	UNITS PER ASSY
11F					
-001A	A225400276-580		. DOOR ASSY-SINGLE used on 070F (25415101U), 070F (25415101X), 070J(254151410), 070H (25415141A) SEE 25-41-51-01U FOR NHA SEE 25-41-51-01X FOR NHA SEE 25-41-51-410 FOR NHA SEE 25-41-51-41A FOR NHA		RF
-001B	A225400276-578		. DOOR ASSY-SINGLE used on 070G (25415101U), 070D (25415101V), 070J (25415141A), 070C (25415141J), 070K (25415141R), 070J (25415142C), 070D (25415142H), 070G (25415142M) SEE 25-41-51-01U FOR NHA SEE 25-41-51-01V FOR NHA SEE 25-41-51-41A FOR NHA SEE 25-41-51-41J FOR NHA SEE 25-41-51-41R FOR NHA SEE 25-41-51-42C FOR NHA SEE 25-41-51-42H FOR NHA SEE 25-41-51-42M FOR NHA		RF
-001C	A225400276-582		. DOOR ASSY-SINGLE used on 070H (25415101U), 070D (25415101X), 070F (25415141C) SEE 25-41-51-01U FOR NHA SEE 25-41-51-01X FOR NHA SEE 25-41-51-41C FOR NHA		RF

- ITEM NOT ILLUSTRATED

FIG. ITEM	PART NUMBER	AIRLINE STOCK NUMBER	NOMENCLATURE 1234567	EFF CODE	UNITS PER ASSY
-001D	A225400276-928		. DOOR ASSY-SINGLE used on 070J (25415101U), 070G (25415101Y), 070F(25415101Z), 070G (25415141A), 070G (25415141B), 070F(25415141D), 070G (25415141G), 070D (25415141Z), 070B(25415142Q), 070A (25415142S), 070B (25415142U) SEE 25-41-51-01U FOR NHA SEE 25-41-51-01Y FOR NHA SEE 25-41-51-01Z FOR NHA SEE 25-41-51-41A FOR NHA SEE 25-41-51-41B FOR NHA SEE 25-41-51-41D FOR NHA SEE 25-41-51-41G FOR NHA SEE 25-41-51-41Z FOR NHA SEE 25-41-51-42Q FOR NHA SEE 25-41-51-42S FOR NHA SEE 25-41-51-42U FOR NHA		RF

- ITEM NOT ILLUSTRATED

FIG. ITEM	PART NUMBER	AIRLINE STOCK NUMBER	NOMENCLATURE 1234567	EFF CODE	UNITS PER ASSY
-001E	A225400276-934		. DOOR ASSY-SINGLE used on 070E (25415101Q), 070D (25415101W), 070H (25415101Z), 070B (25415141C), 070A (25415141D), 070C (25415141G), 070F (25415141J), 070F (25415141K), 070D (25415141M), 070B (25415141R), 070B (25415141T), 070E(25415141Y), 070L (25415142A), 070J (25415142B), 070C(25415142G), 070J (25415142H), 070A (25415142K), 070E(25415142M), 070F (25415142Q), 070H (25415142R) SEE 25-41-51-01Q FOR NHA SEE 25-41-51-01W FOR NHA SEE 25-41-51-01Z FOR NHA SEE 25-41-51-41C FOR NHA SEE 25-41-51-41D FOR NHA SEE 25-41-51-41G FOR NHA SEE 25-41-51-41J FOR NHA SEE 25-41-51-41K FOR NHA SEE 25-41-51-41M FOR NHA SEE 25-41-51-41R FOR NHA SEE 25-41-51-41T FOR NHA SEE 25-41-51-41Y FOR NHA SEE 25-41-51-42A FOR NHA SEE 25-41-51-42B FOR NHA SEE 25-41-51-42G FOR NHA SEE 25-41-51-42H FOR NHA SEE 25-41-51-42K FOR NHA SEE 25-41-51-42M FOR NHA SEE 25-41-51-42Q FOR NHA SEE 25-41-51-42R FOR NHA		RF

- ITEM NOT ILLUSTRATED

FIG. ITEM	PART NUMBER	AIRLINE STOCK NUMBER	NOMENCLATURE 1234567	EFF CODE	UNITS PER ASSY
-001F	A225400276-944		. DOOR ASSY-SINGLE used on 070K (25415101W), 070H (25415101X), 070G (25415142R), 070J (25415142S), 070E (25415142T) SEE 25-41-51-01W FOR NHA SEE 25-41-51-01X FOR NHA SEE 25-41-51-42R FOR NHA SEE 25-41-51-42S FOR NHA SEE 25-41-51-42T FOR NHA		RF
-001G	A225400276-588		. DOOR ASSY-SINGLE used on 070B (25415101S), 070L (25415101T), 070F(25415101V), 070H (25415101W), 070C (25415101Z), 070L(25415141B), 070C (25415141C), 070D (25415141G), 070D(25415141H), 070E (25415141M), 070E (25415141N), 070J(25415141X), 070D (25415142E), 070B (25415142P) SEE 25-41-51-01S FOR NHA SEE 25-41-51-01T FOR NHA SEE 25-41-51-01V FOR NHA SEE 25-41-51-01W FOR NHA SEE 25-41-51-01Z FOR NHA SEE 25-41-51-41B FOR NHA SEE 25-41-51-41C FOR NHA SEE 25-41-51-41G FOR NHA SEE 25-41-51-41H FOR NHA SEE 25-41-51-41M FOR NHA SEE 25-41-51-41N FOR NHA SEE 25-41-51-41X FOR NHA SEE 25-41-51-42E FOR NHA SEE 25-41-51-42P FOR NHA		RF

- ITEM NOT ILLUSTRATED

FIG. ITEM	PART NUMBER	AIRLINE STOCK NUMBER	NOMENCLATURE 1234567	EFF CODE	UNITS PER ASSY
-001H	A225400276-940		. DOOR ASSY-SINGLE used on 070A (25415101S), 070F (25415101W), 070E(25415101Y), 070G (254151410), 070L (25415141G), 070F(25415141P), 070H (25415142G), 070A (25415142H) SEE 25-41-51-01S FOR NHA SEE 25-41-51-01W FOR NHA SEE 25-41-51-01Y FOR NHA SEE 25-41-51-410 FOR NHA SEE 25-41-51-41G FOR NHA SEE 25-41-51-41P FOR NHA SEE 25-41-51-42G FOR NHA SEE 25-41-51-42H FOR NHA		RF
-001J	A225400276-584		. DOOR ASSY-SINGLE used on 070G (25415101S), 070M (25415101T), 070J (25415101V), 070J (25415101W), 070D (25415101Y), 070C(254151410), 070F (25415141F), 070K (25415141G), 070L(25415141H), 070J (25415141N), 070K (25415142S) SEE 25-41-51-01S FOR NHA SEE 25-41-51-01T FOR NHA SEE 25-41-51-01V FOR NHA SEE 25-41-51-01W FOR NHA SEE 25-41-51-01Y FOR NHA SEE 25-41-51-410 FOR NHA SEE 25-41-51-41F FOR NHA SEE 25-41-51-41G FOR NHA SEE 25-41-51-41H FOR NHA SEE 25-41-51-41N FOR NHA SEE 25-41-51-42S FOR NHA		RF

- ITEM NOT ILLUSTRATED

FIG. ITEM	PART NUMBER	AIRLINE STOCK NUMBER	NOMENCLATURE 1234567	EFF CODE	UNITS PER ASSY
-001K	A225400276-938		. DOOR ASSY-SINGLE used on 070C (25415101W), 070M (25415141R) SEE 25-41-51-01W FOR NHA SEE 25-41-51-41R FOR NHA		RF

- ITEM NOT ILLUSTRATED

FIG. ITEM	PART NUMBER	AIRLINE STOCK NUMBER	NOMENCLATURE 1234567	EFF CODE	UNITS PER ASSY
-001L	A225400276-942		. DOOR ASSY-SINGLE used on 070E (25415101W), 070L (25415101X), 070A (25415101Z), 070A (254151410), 070G (25415141C), 070D (25415141D), 070E (25415141F), 070A (25415141K), 070B (25415141L), 070G (25415141N), 070C (25415141P), 070A (25415141T), 070A (25415141Y), 070H (254151420), 070K (25415142A), 070B (25415142C), 070F (25415142D), 070B (25415142E), 070D (25415142G), 070A (25415142J), 070B(25415142M), 070E (25415142P) SEE 25-41-51-01W FOR NHA SEE 25-41-51-01X FOR NHA SEE 25-41-51-01Z FOR NHA SEE 25-41-51-410 FOR NHA SEE 25-41-51-41C FOR NHA SEE 25-41-51-41D FOR NHA SEE 25-41-51-41F FOR NHA SEE 25-41-51-41K FOR NHA SEE 25-41-51-41L FOR NHA SEE 25-41-51-41N FOR NHA SEE 25-41-51-41P FOR NHA SEE 25-41-51-41T FOR NHA SEE 25-41-51-41Y FOR NHA SEE 25-41-51-420 FOR NHA SEE 25-41-51-42A FOR NHA SEE 25-41-51-42C FOR NHA SEE 25-41-51-42D FOR NHA SEE 25-41-51-42E FOR NHA SEE 25-41-51-42G FOR NHA SEE 25-41-51-42J FOR NHA SEE 25-41-51-42M FOR NHA SEE 25-41-51-42P FOR NHA		RF

- ITEM NOT ILLUSTRATED

FIG. ITEM	PART NUMBER	AIRLINE STOCK NUMBER	NOMENCLATURE 1234567	EFF CODE	UNITS PER ASSY
-001M	A2254002768942		. DOOR ASSY-SINGLE used on 070M (254151410), 070K (25415141F), 070A (25415141S), 070K (25415141Z), 070M (25415142A), 070M (25415142D), 070G (25415142F) SEE 25-41-51-410 FOR NHA SEE 25-41-51-41F FOR NHA SEE 25-41-51-41S FOR NHA SEE 25-41-51-41Z FOR NHA SEE 25-41-51-42A FOR NHA SEE 25-41-51-42D FOR NHA SEE 25-41-51-42F FOR NHA		RF
010A	A225400272-008		. . HINGE used on 001A, 001B, 001C, 001D, 001E, 001F, 001G, 001H, 001J, 001K, 001L, 001M		001
020A	AN565B6H4		. . . SETSCREW used on 010A		002
030A	NAS514P832-6		. . SCREW used on 001A, 001B, 001C, 001D, 001E, 001F, 001G, 001H, 001J, 001K, 001L, 001M		018
040A	0-123-000700000		. . WASHER used on 001A, 001B, 001C, 001D, 001E, 001F, 001G, 001H, 001J, 001K, 001L, 001M		015
050A	DAN316-3025		. . SCREW used on 001A, 001B, 001C, 001D, 001E, 001F, 001G, 001H, 001J, 001K, 001L, 001M		026

- ITEM NOT ILLUSTRATED

FIG. ITEM	PART NUMBER	AIRLINE STOCK NUMBER	NOMENCLATURE 1234567	EFF CODE	UNITS PER ASSY
060A	A225400272-202		. . SECTION used on 001A, 001B, 001C, 001D, 001E, 001F, 001G, 001H, 001J, 001K, 001L, 001M		002
070A	A225400272-205		. . SECTION used on 001A, 001B, 001C, 001D, 001E, 001F, 001G, 001H, 001J, 001K, 001L, 001M		001
080A	NAS514P632-6		. . SCREW used on 001A, 001B, 001C, 001D, 001E, 001F, 001G, 001H, 001J, 001K, 001L, 001M		001
090A	AR197-3		. . HOOK-COAT used on 001A, 001B, 001C, 001D, 001E, 001F, 001G, 001H, 001J, 001K, 001L, 001M		001
-100A	5472R		. . LATCH-LAVATORY SIMPLE DOOR RPLD BY 100B used on 001A, 001B, 001C, 001D, 001E, 001F, 001G, 001H, 001J, 001K, 001L, 001M		001
100B	A8-254-2015-011		. . LATCH-LAVATORY SIMPLE DOOR RPLS 100A used on 001A, 001B, 001C, 001D, 001E, 001F, 001G, 001H, 001J, 001K, 001L, 001M		001
102A	A8-254-2015-951		. . . LOCK used on 100B		001
104A	A8-254-2015-931		. . . RELEASE SYSTEM used on 100B		001

- ITEM NOT ILLUSTRATED

FIG. ITEM	PART NUMBER	AIRLINE STOCK NUMBER	NOMENCLATURE 1234567	EFF CODE	UNITS PER ASSY
106A	A8-254-2014-941		. . . KNOB used on 100B		001
110A	5L0044600109000		. . BOLT-THREADED used on 001A, 001B, 001C, 001D, 001E, 001F, 001G, 001H, 001J, 001K, 001L, 001M		001
120A	1A113-0139-1		. . ASHTRAY ASSY used on 001A, 001B, 001C, 001D, 001E, 001F, 001G, 001H, 001J, 001K, 001L, 001M		002
-123A	1A113-0139-101		. . . COVER-ASHTRAY used on 120A		001
-125A	1A113-0139-103		. . . CASE-ASHTRAY used on 120A		001
130A	2863		. . LATCH ASSY 80477 used on 001A, 001B, 001C, 001G, 001J		001
135A	AM767B		. . LATCH ASSY used on 001D, 001E, 001F, 001H, 001K, 001L, 001M		001
140A	A225400216-222		. . PLATE-SCUFF used on 001A, 001B, 001C, 001D, 001E, 001F, 001G, 001H, 001J, 001K, 001L, 001M		001
150A	F2547242620000		. . OUTLET-AIR used on 001A, 001B, 001C, 001D, 001E, 001F, 001G, 001H, 001J, 001K, 001L, 001M		004

- ITEM NOT ILLUSTRATED

FIG. ITEM	PART NUMBER	AIRLINE STOCK NUMBER	NOMENCLATURE 1234567	EFF CODE	UNITS PER ASSY
160A	ABS0706-25-16		. . SCREW used on 001A, 001B, 001C, 001D, 001E, 001F, 001G, 001H, 001J, 001K, 001L, 001M		008

- ITEM NOT ILLUSTRATED

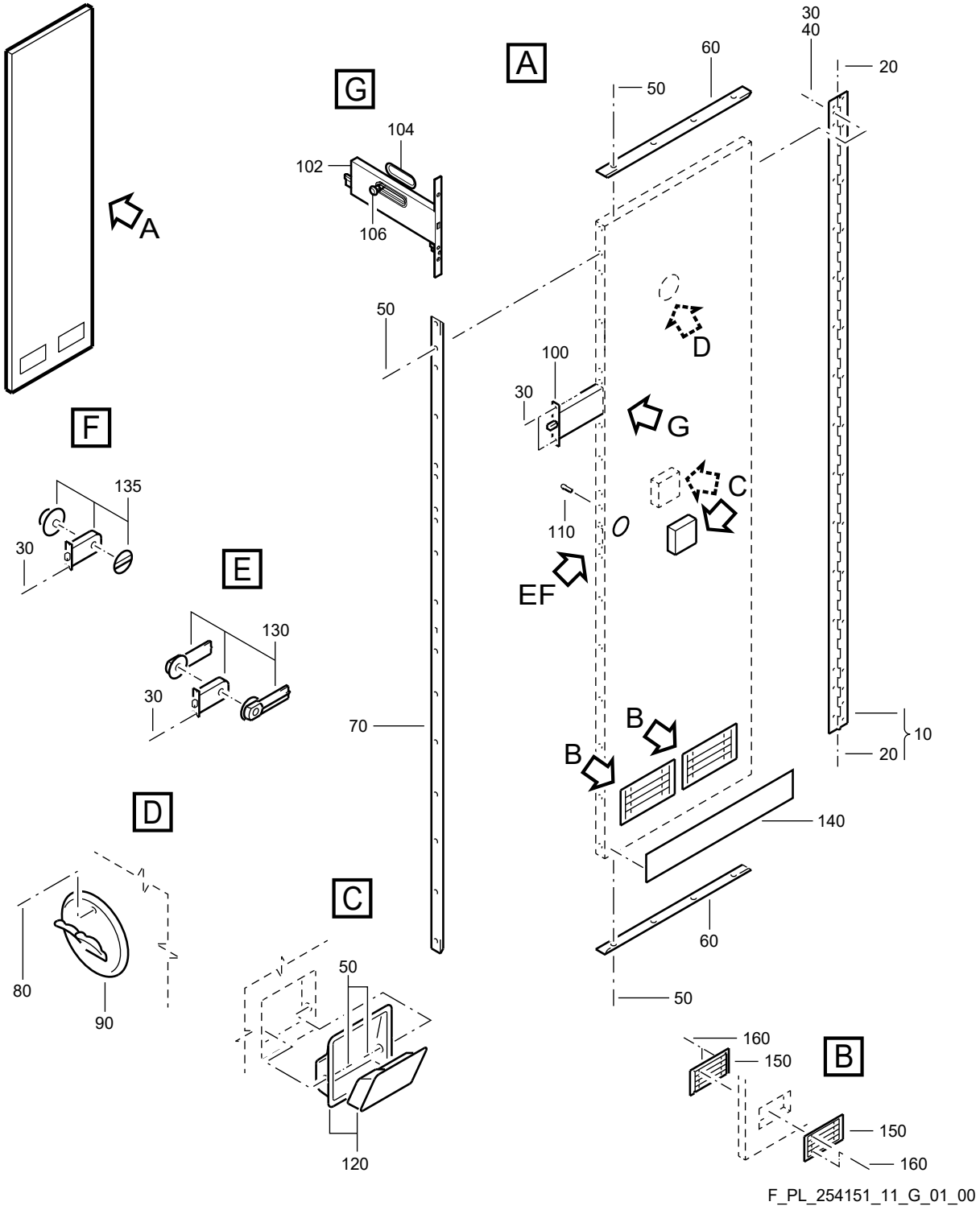

DOOR ASSY-SINGLE
Figure 11G/EN254151SHEET11G01

FIG. ITEM	PART NUMBER	AIRLINE STOCK NUMBER	NOMENCLATURE 1234567	EFF CODE	UNITS PER ASSY
11G					
-001A	A225400276-936		. DOOR ASSY-SINGLE used on 070B (25415101X), 070B (25415101Z), 070C (25415141D), 070G (25415142J), 070H (25415142N), 070F (25415142P) SEE 25-41-51-01X FOR NHA SEE 25-41-51-01Z FOR NHA SEE 25-41-51-41D FOR NHA SEE 25-41-51-42J FOR NHA SEE 25-41-51-42N FOR NHA SEE 25-41-51-42P FOR NHA		RF
-001B	A225400276-946		. DOOR ASSY-SINGLE PRE VSB A2-254-25-106 used on 070G (25415101X), 070K (25415101Y), 070D (25415141C), 070H (25415141F), 070M (25415141H), 080A (25415141Q), 070D (25415141S), 070D (254151420), 070E(25415142C), 070E (25415142G), 070C (25415142J), 070D(25415142K), 070E (25415142Q), 070C (25415142S) SEE 25-41-51-01X FOR NHA SEE 25-41-51-01Y FOR NHA SEE 25-41-51-41C FOR NHA SEE 25-41-51-41F FOR NHA SEE 25-41-51-41H FOR NHA SEE 25-41-51-41Q FOR NHA SEE 25-41-51-41S FOR NHA SEE 25-41-51-420 FOR NHA SEE 25-41-51-42C FOR NHA SEE 25-41-51-42G FOR NHA SEE 25-41-51-42J FOR NHA SEE 25-41-51-42K FOR NHA SEE 25-41-51-42Q FOR NHA SEE 25-41-51-42S FOR NHA		RF

- ITEM NOT ILLUSTRATED

FIG. ITEM	PART NUMBER	AIRLINE STOCK NUMBER	NOMENCLATURE 1234567	EFF CODE	UNITS PER ASSY
-001C	A225400276-922		. DOOR ASSY-SINGLE used on 070H (25415101P) SEE 25-41-51-01P FOR NHA		RF
-001D	A225400276-594		. DOOR ASSY-SINGLE used on 070J (25415101X), 070K (25415141D), 070F(25415141G), 070A (25415141H), 070H (25415141K), 070H(25415142B) SEE 25-41-51-01X FOR NHA SEE 25-41-51-41D FOR NHA SEE 25-41-51-41G FOR NHA SEE 25-41-51-41H FOR NHA SEE 25-41-51-41K FOR NHA SEE 25-41-51-42B FOR NHA		RF
-001E	A225400276-568		. DOOR ASSY-SINGLE used on 070C (25415101S), 070G (25415101Z) SEE 25-41-51-01S FOR NHA SEE 25-41-51-01Z FOR NHA		RF
-001F	A225400276-948		. DOOR ASSY-SINGLE used on 070J (25415101Y), 070K (25415141A), 070J(25415141V), 070F (25415141Y), 070K (25415142C), 070A(25415142M), 070C (25415142N), 070D (25415142R), 070B(25415142S) SEE 25-41-51-01Y FOR NHA SEE 25-41-51-41A FOR NHA SEE 25-41-51-41V FOR NHA SEE 25-41-51-41Y FOR NHA SEE 25-41-51-42C FOR NHA SEE 25-41-51-42M FOR NHA SEE 25-41-51-42N FOR NHA SEE 25-41-51-42R FOR NHA SEE 25-41-51-42S FOR NHA		RF

- ITEM NOT ILLUSTRATED

FIG. ITEM	PART NUMBER	AIRLINE STOCK NUMBER	NOMENCLATURE 1234567	EFF CODE	UNITS PER ASSY
-001G	A225400276-952		. DOOR ASSY-SINGLE PRE VSB A2-254-25-130 used on 070B (254151410), 070D (25415141K), 070F(25415141N), 070C (25415141R), 070G (25415141W), 070G (25415141X), 070C (254151420), 070G (25415142E), 070B (25415142J), 070G (25415142P) SEE 25-41-51-410 FOR NHA SEE 25-41-51-41K FOR NHA SEE 25-41-51-41N FOR NHA SEE 25-41-51-41R FOR NHA SEE 25-41-51-41W FOR NHA SEE 25-41-51-41X FOR NHA SEE 25-41-51-420 FOR NHA SEE 25-41-51-42E FOR NHA SEE 25-41-51-42J FOR NHA SEE 25-41-51-42P FOR NHA		RF
-001H	A225400276-574		. DOOR ASSY-SINGLE used on 070J (25415141S), 070D (25415142A) SEE 25-41-51-41S FOR NHA SEE 25-41-51-42A FOR NHA		RF

- ITEM NOT ILLUSTRATED

FIG. ITEM	PART NUMBER	AIRLINE STOCK NUMBER	NOMENCLATURE 1234567	EFF CODE	UNITS PER ASSY
-001J	A225400276-596		. DOOR ASSY-SINGLE used on 070F (254151410), 070E (25415141A), 070D(25415141L), 070H (25415141P), 070K (25415141V), 070D(25415141X), 070F (254151420), 070C (25415142A), 070B(25415142B), 070B (25415142D), 070F (25415142L), 070C(25415142U) SEE 25-41-51-410 FOR NHA SEE 25-41-51-41A FOR NHA SEE 25-41-51-41L FOR NHA SEE 25-41-51-41P FOR NHA SEE 25-41-51-41V FOR NHA SEE 25-41-51-41X FOR NHA SEE 25-41-51-420 FOR NHA SEE 25-41-51-42A FOR NHA SEE 25-41-51-42B FOR NHA SEE 25-41-51-42D FOR NHA SEE 25-41-51-42L FOR NHA SEE 25-41-51-42U FOR NHA		RF
-001K	A225400276-954		. DOOR ASSY-SINGLE used on 070B (25415141A) SEE 25-41-51-41A FOR NHA		RF
-001L	A225400276-956		. DOOR ASSY-SINGLE used on 070C (25415141F) SEE 25-41-51-41F FOR NHA		RF
-001M	A225400276-598		. DOOR ASSY-SINGLE used on 070D (25415141F), 070B (25415141H) SEE 25-41-51-41F FOR NHA SEE 25-41-51-41H FOR NHA		RF

- ITEM NOT ILLUSTRATED

FIG. ITEM	PART NUMBER	AIRLINE STOCK NUMBER	NOMENCLATURE 1234567	EFF CODE	UNITS PER ASSY
-001N	A225400278-926		. DOOR ASSY-SINGLE POST VSB A2-254-25-106 used on 070M (25415142C), 070N (25415142G) SEE 25-41-51-42C FOR NHA SEE 25-41-51-42G FOR NHA		RF
-001P	A225400263-990		. DOOR ASSY-SINGLE POST VSB A2-254-25-130 used on 070P (254151410), 070M (25415141K), 070M (25415141N), 070P (25415141R), 070K (25415141W), 070L (25415141X), 070K (254151420), 070K (25415142E), 070L (25415142J), 070H (25415142P) SEE 25-41-51-410 FOR NHA SEE 25-41-51-41K FOR NHA SEE 25-41-51-41N FOR NHA SEE 25-41-51-41R FOR NHA SEE 25-41-51-41W FOR NHA SEE 25-41-51-41X FOR NHA SEE 25-41-51-420 FOR NHA SEE 25-41-51-42E FOR NHA SEE 25-41-51-42J FOR NHA SEE 25-41-51-42P FOR NHA		RF
010A	A225400272-008		. . HINGE used on 001A, 001B, 001C, 001D, 001E, 001F, 001G, 001H, 001J, 001K, 001L, 001M, 001N, 001P		001
020A	AN565B6H4		. . . SETSCREW used on 010A		002

- ITEM NOT ILLUSTRATED

FIG. ITEM	PART NUMBER	AIRLINE STOCK NUMBER	NOMENCLATURE 1234567	EFF CODE	UNITS PER ASSY
030A	NAS514P832-6		. . SCREW used on 001A, 001B, 001C, 001D, 001E, 001F, 001G, 001H, 001J, 001K, 001L, 001M, 001N, 001P		018
040A	0-123-000700000		. . WASHER used on 001A, 001B, 001C, 001D, 001E, 001F, 001G, 001H, 001J, 001K, 001L, 001M, 001N, 001P		015
050A	DAN316-3025		. . SCREW PRE VSB A2-254-25-106 used on 001A, 001B, 001C, 001D, 001E, 001F, 001G, 001H, 001J, 001K, 001L, 001M, 001P		026
-050B	DAN316-3025		. . SCREW POST VSB A2-254-25-106 used on 001N		024
060A	A225400272-202		. . SECTION used on 001A, 001B, 001C, 001D, 001E, 001F, 001G, 001H, 001J, 001K, 001L, 001M, 001N, 001P		002
070A	A225400272-205		. . SECTION used on 001A, 001B, 001C, 001D, 001E, 001F, 001G, 001H, 001J, 001K, 001L, 001M, 001N, 001P		001
080A	NAS514P632-6		. . SCREW used on 001A, 001B, 001C, 001D, 001E, 001F, 001G, 001H, 001J, 001K, 001L, 001M, 001N, 001P		001

- ITEM NOT ILLUSTRATED

FIG. ITEM	PART NUMBER	AIRLINE STOCK NUMBER	NOMENCLATURE 1234567	EFF CODE	UNITS PER ASSY
090A	AR197-3		. . HOOK-COAT used on 001A, 001B, 001C, 001D, 001E, 001F, 001G, 001H, 001J, 001K, 001L, 001M, 001N, 001P		001
-100A	5472R		. . LATCH-LAVATORY SIMPLE DOOR RPLD BY 100B PRE VSB A2-254-25-106 used on 001A, 001B, 001C, 001D, 001E, 001F, 001G, 001H, 001J, 001K, 001L, 001M, 001P		001
100B	A8-254-2015-011		. . LATCH-LAVATORY SIMPLE DOOR RPLS 100A POST VSB A2-254-25-106 used on 001A, 001B, 001C, 001D, 001E, 001F, 001G, 001H, 001J, 001K, 001L, 001M, 001N, 001P		001
102A	A8-254-2015-951		. . . LOCK used on 100B		001
104A	A8-254-2015-931		. . . RELEASE SYSTEM used on 100B		001
106A	A8-254-2014-941		. . . KNOB used on 100B		001
110A	5L0044600109000		. . BOLT-THREADED used on 001A, 001B, 001C, 001D, 001E, 001F, 001G, 001H, 001J, 001K, 001L, 001M, 001N, 001P		001

- ITEM NOT ILLUSTRATED

FIG. ITEM	PART NUMBER	AIRLINE STOCK NUMBER	NOMENCLATURE 1234567	EFF CODE	UNITS PER ASSY
120A	1A113-0139-1		. . ASHTRAY ASSY used on 001A, 001B, 001C, 001D, 001E, 001F, 001G, 001H, 001J, 001K, 001L, 001M, 001N, 001P		002
-123A	1A113-0139-101		. . . COVER-ASHTRAY used on 120A		001
-125A	1A113-0139-103		. . . CASE-ASHTRAY used on 120A		001
130A	AM767B		. . LATCH ASSY used on 001A, 001B, 001C, 001F, 001G, 001K, 001L, 001N, 001P		001
135A	2863		. . LATCH ASSY 80477 used on 001D, 001E, 001H, 001J, 001M		001
140A	A225400216-222		. . PLATE-SCUFF PRE VSB A2-254-25-106 used on 001A, 001B, 001C, 001D, 001E, 001F, 001G, 001H, 001J, 001K, 001L, 001M, 001P		001
-140B	R225400211-004		. . PLATE-SCUFF POST VSB A2-254-25-106 used on 001N		001
150A	F2547242620000		. . OUTLET-AIR used on 001A, 001B, 001C, 001D, 001E, 001F, 001G, 001H, 001J, 001K, 001L, 001M, 001N, 001P		004
160A	ABS0706-25-16		. . SCREW used on 001A, 001B, 001C, 001D, 001E, 001F, 001G, 001H, 001J, 001K, 001L, 001M, 001N, 001P		008

- ITEM NOT ILLUSTRATED

THIS PAGE IS INTENTIONALLY LEFT BLANK

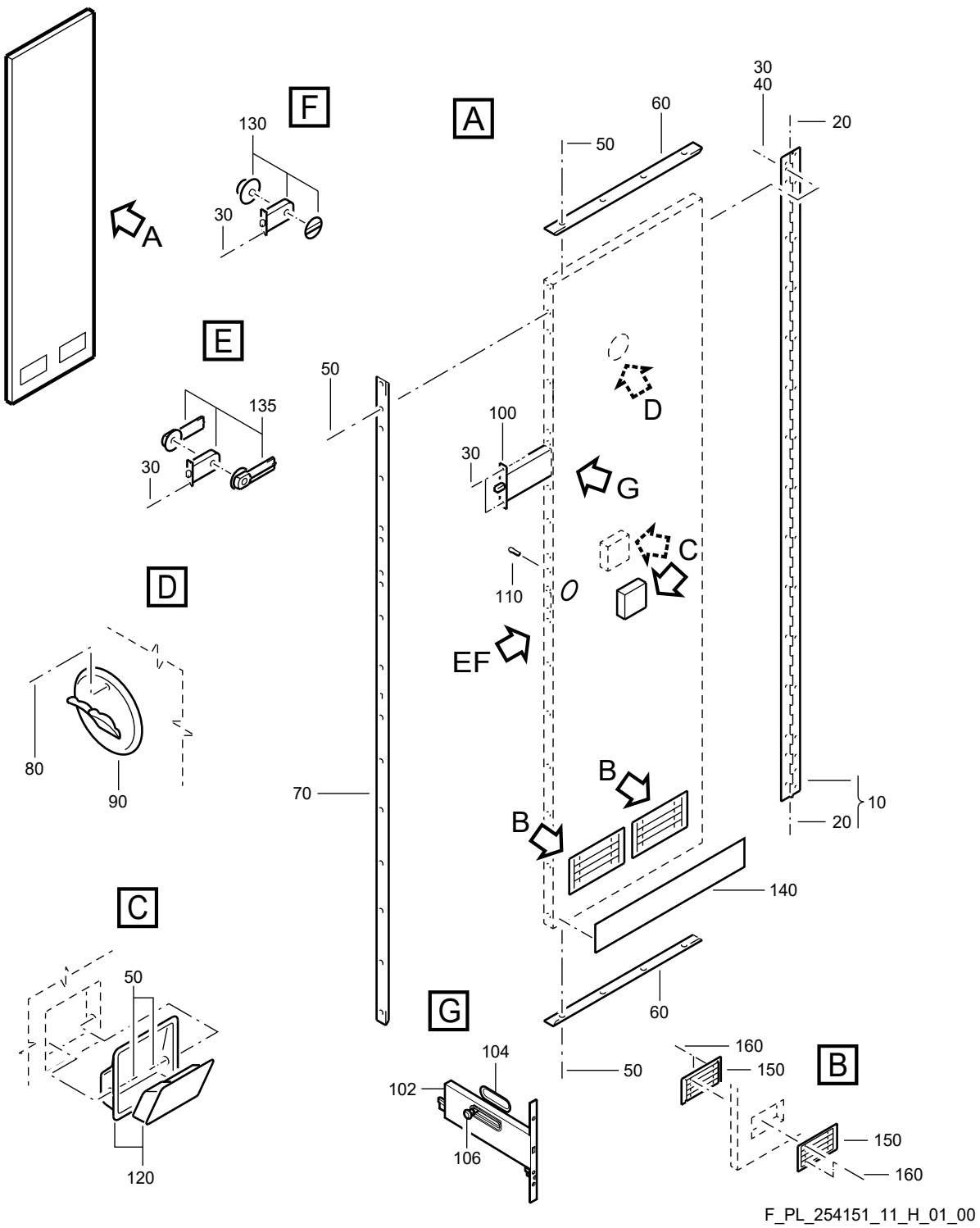

DOOR ASSY-SINGLE
Figure 11H/EN254151SHEET11H01

FIG. ITEM	PART NUMBER	AIRLINE STOCK NUMBER	NOMENCLATURE 1234567	EFF CODE	UNITS PER ASSY
11H					
-001A	A225400278-502		. DOOR ASSY-SINGLE used on 070C (25415141A), 070K (25415141K), 070G (25415141P), 070C (25415141U), 070J (25415142L) SEE 25-41-51-41A FOR NHA SEE 25-41-51-41K FOR NHA SEE 25-41-51-41P FOR NHA SEE 25-41-51-41U FOR NHA SEE 25-41-51-42L FOR NHA		RF
-001B	A225400278-504		. DOOR ASSY-SINGLE used on 070A (25415141E) SEE 25-41-51-41E FOR NHA		RF
-001C	A225400278-506		. DOOR ASSY-SINGLE used on 070J (25415141F) SEE 25-41-51-41F FOR NHA		RF
-001D	A225400278-508		. DOOR ASSY-SINGLE used on 070A (25415141G) SEE 25-41-51-41G FOR NHA		RF
-001E	A225400278-510		. DOOR ASSY-SINGLE used on 070G (25415141J), 070D (25415141U), 070D(25415142C), 070H (25415142F), 070H (25415142H), 070H(25415142U) SEE 25-41-51-41J FOR NHA SEE 25-41-51-41U FOR NHA SEE 25-41-51-42C FOR NHA SEE 25-41-51-42F FOR NHA SEE 25-41-51-42H FOR NHA SEE 25-41-51-42U FOR NHA		RF

- ITEM NOT ILLUSTRATED

FIG. ITEM	PART NUMBER	AIRLINE STOCK NUMBER	NOMENCLATURE 1234567	EFF CODE	UNITS PER ASSY
-001F	A225400278-800		. DOOR ASSY-SINGLE PRE VSB A2-254-25-131 used on 070K (25415141J), 070H (25415141L), 070E(25415141P), 070E (25415141S), 070E (25415141U), 070B(25415141V), 070C (25415141Y), 070B (25415141Z), 070H(25415142A), 070F (25415142B), 070A (25415142D), 070D(25415142F), 070C (25415142K) SEE 25-41-51-41J FOR NHA SEE 25-41-51-41L FOR NHA SEE 25-41-51-41P FOR NHA SEE 25-41-51-41S FOR NHA SEE 25-41-51-41U FOR NHA SEE 25-41-51-41V FOR NHA SEE 25-41-51-41Y FOR NHA SEE 25-41-51-41Z FOR NHA SEE 25-41-51-42A FOR NHA SEE 25-41-51-42B FOR NHA SEE 25-41-51-42D FOR NHA SEE 25-41-51-42F FOR NHA SEE 25-41-51-42K FOR NHA		RF
-001G	A225400278-802		. DOOR ASSY-SINGLE used on 070A (25415141M), 070G (25415141S) SEE 25-41-51-41M FOR NHA SEE 25-41-51-41S FOR NHA		RF

- ITEM NOT ILLUSTRATED

FIG. ITEM	PART NUMBER	AIRLINE STOCK NUMBER	NOMENCLATURE 1234567	EFF CODE	UNITS PER ASSY
-001H	A225400278-514		. DOOR ASSY-SINGLE PRE VSB A2-254-25-039 used on 070E (25415141L), 070D (25415141V), 070J(25415141Y), 070E (25415142A), 070C (25415142D), 070F(25415142H), 070D (25415142L), 070C (25415142M), 070A(25415142N), 070J (25415142Q), 070C (25415142R), 070F(25415142S), 070D (25415142T), 070G (25415142U) SEE 25-41-51-41L FOR NHA SEE 25-41-51-41V FOR NHA SEE 25-41-51-41Y FOR NHA SEE 25-41-51-42A FOR NHA SEE 25-41-51-42D FOR NHA SEE 25-41-51-42H FOR NHA SEE 25-41-51-42L FOR NHA SEE 25-41-51-42M FOR NHA SEE 25-41-51-42N FOR NHA SEE 25-41-51-42Q FOR NHA SEE 25-41-51-42R FOR NHA SEE 25-41-51-42S FOR NHA SEE 25-41-51-42T FOR NHA SEE 25-41-51-42U FOR NHA		RF
-001J	A225400278-804		. DOOR ASSY-SINGLE used on 070G (25415141L) SEE 25-41-51-41L FOR NHA		RF

- ITEM NOT ILLUSTRATED

FIG. ITEM	PART NUMBER	AIRLINE STOCK NUMBER	NOMENCLATURE 1234567	EFF CODE	UNITS PER ASSY
-001K	A225400278-806		. DOOR ASSY-SINGLE used on 070A (25415141P), 070E (25415141V), 070B(25415141Y), 070J (25415142A), 070A (25415142F), 070K(25415142H) SEE 25-41-51-41P FOR NHA SEE 25-41-51-41V FOR NHA SEE 25-41-51-41Y FOR NHA SEE 25-41-51-42A FOR NHA SEE 25-41-51-42F FOR NHA SEE 25-41-51-42H FOR NHA		RF
-001L	A225400278-808		. DOOR ASSY-SINGLE used on 070K (25415141N), 070E (254151420), 070F (25415142J) SEE 25-41-51-41N FOR NHA SEE 25-41-51-420 FOR NHA SEE 25-41-51-42J FOR NHA		RF
-001M	A225400278-824		. DOOR ASSY-SINGLE used on 070F (25415142C), 070K (25415142K), 070D(25415142S) SEE 25-41-51-42C FOR NHA SEE 25-41-51-42K FOR NHA SEE 25-41-51-42S FOR NHA		RF
-001N	A225400278-574		. DOOR ASSY-SINGLE POST SB 25-1574 used on 070N (25415141G) SEE 25-41-51-41G FOR NHA		RF
-001P	A225400278-578		. DOOR ASSY-SINGLE POST VSB A2-254-25-039 used on 070M (25415141V), 070L (25415141Y) SEE 25-41-51-41V FOR NHA SEE 25-41-51-41Y FOR NHA		RF

- ITEM NOT ILLUSTRATED

FIG. ITEM	PART NUMBER	AIRLINE STOCK NUMBER	NOMENCLATURE 1234567	EFF CODE	UNITS PER ASSY
-001Q	A225400278-932		. DOOR ASSY-SINGLE POST VSB A2-254-25-131 used on 070K (25415141L) SEE 25-41-51-41L FOR NHA		RF
010A	A225400272-008		. . HINGE used on 001A, 001B, 001C, 001D, 001E, 001F, 001G, 001H, 001J, 001K, 001L, 001M, 001N, 001P, 001Q		001
020A	AN565B6H4		. . . SETSCREW used on 010A		002
030A	NAS514P832-6		. . SCREW used on 001A, 001B, 001C, 001D, 001E, 001F, 001G, 001H, 001J, 001K, 001L, 001M, 001N, 001P, 001Q		018
040A	0-123-000700000		. . WASHER used on 001A, 001B, 001C, 001D, 001E, 001F, 001G, 001H, 001J, 001K, 001L, 001M, 001N, 001P, 001Q		015
050A	DAN316-3025		. . SCREW used on 001A, 001B, 001C, 001D, 001E, 001F, 001G, 001H, 001J, 001K, 001L, 001M, 001N, 001P, 001Q		026
060A	A225400272-202		. . SECTION used on 001A, 001B, 001C, 001D, 001E, 001F, 001G, 001H, 001J, 001K, 001L, 001M, 001N, 001P, 001Q		002

- ITEM NOT ILLUSTRATED

FIG. ITEM	PART NUMBER	AIRLINE STOCK NUMBER	NOMENCLATURE 1234567	EFF CODE	UNITS PER ASSY
070A	A225400272-205		. . SECTION used on 001A, 001B, 001C, 001D, 001E, 001F, 001G, 001H, 001J, 001K, 001L, 001M, 001N, 001P, 001Q		001
080A	NAS514P632-6		. . SCREW used on 001A, 001B, 001C, 001D, 001E, 001F, 001G, 001H, 001J, 001K, 001L, 001M, 001N, 001P, 001Q		001
090A	AR197-3		. . HOOK-COAT used on 001A, 001B, 001C, 001D, 001E, 001F, 001G, 001H, 001J, 001K, 001L, 001M, 001N, 001P, 001Q		001
-100A	5472R		. . LATCH-LAVATORY SIMPLE DOOR RPLD BY 100B PRE VSB A2-254-25-039 used on 001A, 001B, 001C, 001D, 001E, 001F, 001G, 001H, 001J, 001K, 001L, 001M, 001N, 001Q		001
100B	A8-254-2015-011		. . LATCH-LAVATORY SIMPLE DOOR RPLS 100A POST VSB A2-254-25-039 used on 001A, 001B, 001C, 001D, 001E, 001F, 001G, 001H, 001J, 001K, 001L, 001M, 001N, 001P, 001Q		001
102A	A8-254-2015-951		. . . LOCK used on 100B		001

- ITEM NOT ILLUSTRATED

FIG. ITEM	PART NUMBER	AIRLINE STOCK NUMBER	NOMENCLATURE 1234567	EFF CODE	UNITS PER ASSY
104A	A8-254-2015-931		. . . RELEASE SYSTEM used on 100B		001
106A	A8-254-2014-941		. . . KNOB used on 100B		001
110A	5L0044600109000		. . BOLT-THREADED used on 001A, 001B, 001C, 001D, 001E, 001F, 001G, 001H, 001J, 001K, 001L, 001M, 001N, 001P, 001Q		001
120A	1A113-0139-1		. . ASHTRAY ASSY used on 001A, 001B, 001C, 001D, 001E, 001F, 001G, 001H, 001J, 001K, 001L, 001M, 001N, 001P, 001Q		002
-123A	1A113-0139-101		. . . COVER-ASHTRAY used on 120A		001
-125A	1A113-0139-103		. . . CASE-ASHTRAY used on 120A		001
130A	2863		. . LATCH ASSY 80477 used on 001A, 001B, 001C, 001D, 001E, 001H, 001N, 001P		001
135A	AM767B		. . LATCH ASSY used on 001F, 001G, 001J, 001K, 001L, 001M, 001Q		001
140A	A225400216-222		. . PLATE-SCUFF used on 001A, 001B, 001C, 001D, 001E, 001F, 001G, 001H, 001J, 001K, 001L, 001M, 001N, 001P, 001Q		001

- ITEM NOT ILLUSTRATED

FIG. ITEM	PART NUMBER	AIRLINE STOCK NUMBER	NOMENCLATURE 1234567	EFF CODE	UNITS PER ASSY
150A	F2547242620000		. . OUTLET-AIR used on 001A, 001B, 001C, 001D, 001E, 001F, 001G, 001H, 001J, 001K, 001L, 001M, 001N, 001P, 001Q		004
160A	ABS0706-25-16		. . SCREW used on 001A, 001B, 001C, 001D, 001E, 001F, 001G, 001H, 001J, 001K, 001L, 001M, 001N, 001P, 001Q		008

- ITEM NOT ILLUSTRATED

THIS PAGE IS INTENTIONALLY LEFT BLANK

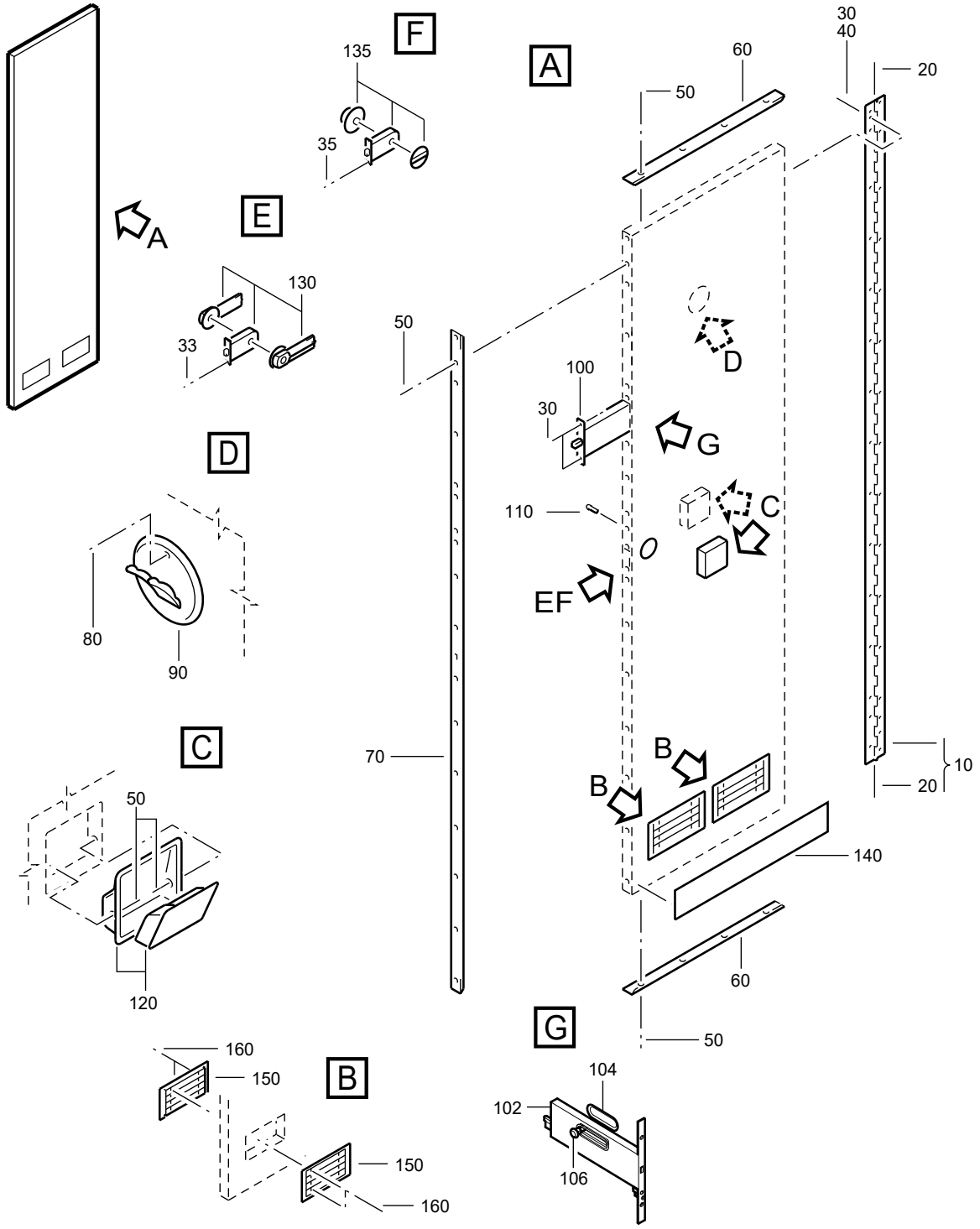

F_PL_254151_11_J_01_01

DOOR ASSY-SINGLE
Figure 11J/EN254151SHEET11J01

FIG. ITEM	PART NUMBER	AIRLINE STOCK NUMBER	NOMENCLATURE 1234567	EFF CODE	UNITS PER ASSY
11J					
-001A	A225400276-958		. DOOR ASSY-SINGLE used on 070F (25415141A), 070D (25415141J), 070B (25415141P) SEE 25-41-51-41A FOR NHA SEE 25-41-51-41J FOR NHA SEE 25-41-51-41P FOR NHA		RF
-001B	A225400276-960		. DOOR ASSY-SINGLE used on 070K (25415141H), 070A (25415141J), 070D (25415141R), 070B (25415141U), 070G (25415141V), 070E(25415141W), 070B (25415141X), 070H (25415141Y), 070J(254151420), 070G (25415142A), 070D (25415142B), 070E(25415142H), 070J (25415142J), 070E (25415142L), 070D(25415142M), 070E (25415142R) SEE 25-41-51-41H FOR NHA SEE 25-41-51-41J FOR NHA SEE 25-41-51-41R FOR NHA SEE 25-41-51-41U FOR NHA SEE 25-41-51-41V FOR NHA SEE 25-41-51-41W FOR NHA SEE 25-41-51-41X FOR NHA SEE 25-41-51-41Y FOR NHA SEE 25-41-51-420 FOR NHA SEE 25-41-51-42A FOR NHA SEE 25-41-51-42B FOR NHA SEE 25-41-51-42H FOR NHA SEE 25-41-51-42J FOR NHA SEE 25-41-51-42L FOR NHA SEE 25-41-51-42M FOR NHA SEE 25-41-51-42R FOR NHA		RF

- ITEM NOT ILLUSTRATED

FIG. ITEM	PART NUMBER	AIRLINE STOCK NUMBER	NOMENCLATURE 1234567	EFF CODE	UNITS PER ASSY
-001C	A225400276-848		. DOOR ASSY-SINGLE used on 070E (25415141J), 070C (25415141L) SEE 25-41-51-41J FOR NHA SEE 25-41-51-41L FOR NHA		RF
-001D	A225400276-966		. DOOR ASSY-SINGLE used on 070H (25415141J), 070A (25415141U), 070C(25415141Z), 070C (25415142C), 070L (25415142G), 070G(25415142H), 070L (25415142L), 070L (25415142N) SEE 25-41-51-41J FOR NHA SEE 25-41-51-41U FOR NHA SEE 25-41-51-41Z FOR NHA SEE 25-41-51-42C FOR NHA SEE 25-41-51-42G FOR NHA SEE 25-41-51-42H FOR NHA SEE 25-41-51-42L FOR NHA SEE 25-41-51-42N FOR NHA		RF
-001E	A225400276-968		. DOOR ASSY-SINGLE used on 070J (25415141J), 070A (25415141L), 070C(25415141S) SEE 25-41-51-41J FOR NHA SEE 25-41-51-41L FOR NHA SEE 25-41-51-41S FOR NHA		RF
-001F	A225400276-964		. DOOR ASSY-SINGLE used on 070J (25415141K), 070H (25415141Z) SEE 25-41-51-41K FOR NHA SEE 25-41-51-41Z FOR NHA		RF
-001G	A225400276-670		. DOOR ASSY-SINGLE used on 070F (25415141L) SEE 25-41-51-41L FOR NHA		RF

- ITEM NOT ILLUSTRATED

FIG. ITEM	PART NUMBER	AIRLINE STOCK NUMBER	NOMENCLATURE 1234567	EFF CODE	UNITS PER ASSY
-001J	A225400276-982		. DOOR ASSY-SINGLE used on 070B (25415141J), 070H (25415141V), 070D(25415141Y) SEE 25-41-51-41J FOR NHA SEE 25-41-51-41V FOR NHA SEE 25-41-51-41Y FOR NHA		RF
-001K	A2254002768960		. DOOR ASSY-SINGLE POST SB 25-1314 used on 070L (25415141J), 070F (25415141U), 070L(25415141V), 070K (25415141Y) SEE 25-41-51-41J FOR NHA SEE 25-41-51-41U FOR NHA SEE 25-41-51-41V FOR NHA SEE 25-41-51-41Y FOR NHA		RF
010A	A225400272-008		. . HINGE used on 001A, 001B, 001C, 001D, 001E, 001F, 001J, 001K		001
-010B	A225400272-000		. . HINGE used on 001G		001
020A	AN565B6H4		. . . SETSCREW used on 010A, 010B		002
030A	NAS514P832-6		. . SCREW used on 001A, 001B, 001C, 001D, 001E, 001F, 001G, 001J, 001K		017
033A	NAS514P832-6		. . SCREW used on 001A, 001B, 001C, 001D, 001E, 001F, 001J, 001K		002
035A	NAS514P832-6		. . SCREW used on 001G		002

- ITEM NOT ILLUSTRATED

FIG. ITEM	PART NUMBER	AIRLINE STOCK NUMBER	NOMENCLATURE 1234567	EFF CODE	UNITS PER ASSY
040A	0-123-000700000		. . WASHER used on 001A, 001B, 001C, 001D, 001E, 001F, 001G, 001J, 001K		015
050A	DAN316-3025		. . SCREW used on 001A, 001B, 001C, 001D, 001E, 001F, 001G, 001J, 001K		026
060A	A225400272-202		. . SECTION used on 001A, 001B, 001C, 001D, 001E, 001F, 001G, 001J, 001K		002
070A	A225400272-205		. . SECTION used on 001A, 001B, 001C, 001D, 001E, 001F, 001G, 001J, 001K		001
080A	NAS514P632-6		. . SCREW used on 001A, 001B, 001C, 001D, 001E, 001F, 001G, 001J, 001K		001
090A	AR197-3		. . HOOK-COAT used on 001A, 001B, 001C, 001D, 001E, 001F, 001G, 001J, 001K		001
-100A	5472R		. . LATCH-LAVATORY SIMPLE DOOR RPLD BY 100B used on 001A, 001B, 001C, 001D, 001E, 001F, 001G, 001J, 001K		001

- ITEM NOT ILLUSTRATED

FIG. ITEM	PART NUMBER	AIRLINE STOCK NUMBER	NOMENCLATURE 1234567	EFF CODE	UNITS PER ASSY
100B	A8-254-2015-011		. . LATCH-LAVATORY SIMPLE DOOR RPLS 100A used on 001A, 001B, 001C, 001D, 001E, 001F, 001G, 001J, 001K		001
102A	A8-254-2015-951		. . . LOCK used on 100B		001
104A	A8-254-2015-931		. . . RELEASE SYSTEM used on 100B		001
106A	A8-254-2014-941		. . . KNOB used on 100B		001
110A	5L0044600109000		. . BOLT-THREADED used on 001A, 001B, 001C, 001D, 001E, 001F, 001G, 001J, 001K		001
120A	1A113-0139-1		. . ASHTRAY ASSY used on 001A, 001B, 001C, 001D, 001E, 001F, 001G, 001J, 001K		002
-123A	1A113-0139-101		. . . COVER-ASHTRAY used on 120A		001
-125A	1A113-0139-103		. . . CASE-ASHTRAY used on 120A		001
130A	AM767B		. . LATCH ASSY used on 001A, 001B, 001C, 001D, 001E, 001F, 001J, 001K		001
135A	2863		. . LATCH ASSY 80477 used on 001G		001

- ITEM NOT ILLUSTRATED

FIG. ITEM	PART NUMBER	AIRLINE STOCK NUMBER	NOMENCLATURE 1234567	EFF CODE	UNITS PER ASSY
140A	A225400216-222		. . PLATE-SCUFF used on 001A, 001B, 001C, 001D, 001E, 001F, 001G, 001J, 001K		001
-140B	A225400211-216		. . PLATE-SCUFF used on 001K		001
150A	F2547242620000		. . OUTLET-AIR used on 001A, 001B, 001C, 001D, 001E, 001F, 001G, 001J, 001K		004
160A	ABS0706-25-16		. . SCREW used on 001A, 001B, 001C, 001D, 001E, 001F, 001G, 001J, 001K		008

- ITEM NOT ILLUSTRATED

THIS PAGE IS INTENTIONALLY LEFT BLANK

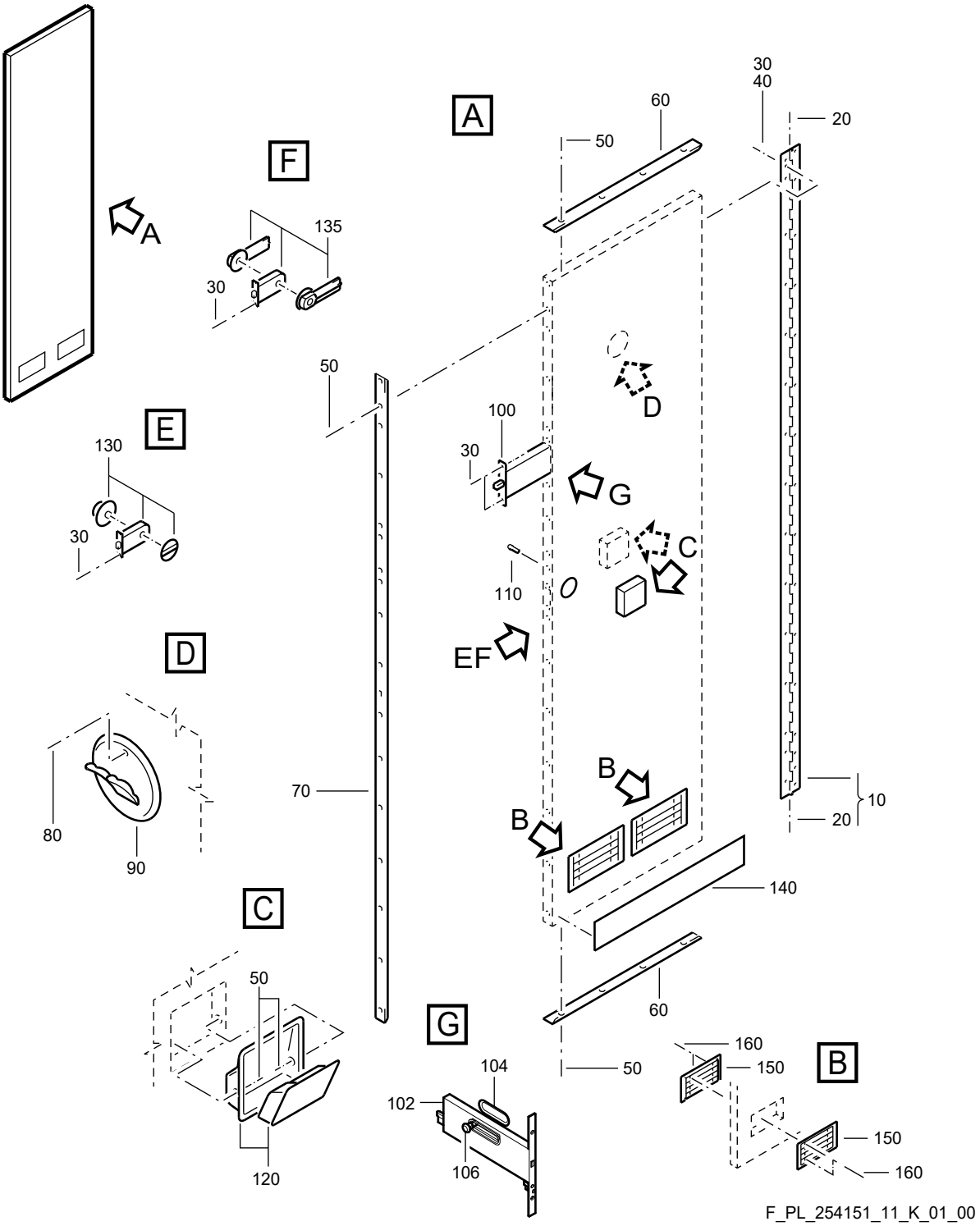

DOOR ASSY-SINGLE
Figure 11K/EN254151SHEET11K01

FIG. ITEM	PART NUMBER	AIRLINE STOCK NUMBER	NOMENCLATURE 1234567	EFF CODE	UNITS PER ASSY
11K					
-001A	A225400278-516		. DOOR ASSY-SINGLE used on 070J (25415141P), 070K (25415142B), 070F(25415142F), 070A (25415142G), 070B (25415142L), 070J(25415142T) SEE 25-41-51-41P FOR NHA SEE 25-41-51-42B FOR NHA SEE 25-41-51-42F FOR NHA SEE 25-41-51-42G FOR NHA SEE 25-41-51-42L FOR NHA SEE 25-41-51-42T FOR NHA		RF
-001B	A225400278-518		. DOOR ASSY-SINGLE used on 070E (25415141R), 070A (25415142E), 070H (25415142K), 070K (25415142L), 070B (25415142R), 070F (25415142T) SEE 25-41-51-41R FOR NHA SEE 25-41-51-42E FOR NHA SEE 25-41-51-42K FOR NHA SEE 25-41-51-42L FOR NHA SEE 25-41-51-42R FOR NHA SEE 25-41-51-42T FOR NHA		RF
-001C	A225400278-520		. DOOR ASSY-SINGLE used on 070F (25415141S) SEE 25-41-51-41S FOR NHA		RF
-001D	A225400278-810		. DOOR ASSY-SINGLE used on 070H (25415141S), 070F (25415141V), 070A(25415142B), 070D (25415142D) SEE 25-41-51-41S FOR NHA SEE 25-41-51-41V FOR NHA SEE 25-41-51-42B FOR NHA SEE 25-41-51-42D FOR NHA		RF

- ITEM NOT ILLUSTRATED

FIG. ITEM	PART NUMBER	AIRLINE STOCK NUMBER	NOMENCLATURE 1234567	EFF CODE	UNITS PER ASSY
-001E	A225400278-522		. DOOR ASSY-SINGLE used on 070K (25415141S) SEE 25-41-51-41S FOR NHA		RF
-001F	A225400278-524		. DOOR ASSY-SINGLE used on 070A (25415141W), 070G (254151420), 070B (25415142A), 070C (25415142E), 070J (25415142G), 070E (25415142J), 070G (25415142K) SEE 25-41-51-41W FOR NHA SEE 25-41-51-420 FOR NHA SEE 25-41-51-42A FOR NHA SEE 25-41-51-42E FOR NHA SEE 25-41-51-42G FOR NHA SEE 25-41-51-42J FOR NHA SEE 25-41-51-42K FOR NHA		RF
-001G	A225400278-812		. DOOR ASSY-SINGLE used on 070G (25415141Y) SEE 25-41-51-41Y FOR NHA		RF
-001H	A225400278-818		. DOOR ASSY-SINGLE used on 070A (25415142A), 070A (25415142C), 070E(25415142F), 070F (25415142G), 070G (25415142T) SEE 25-41-51-42A FOR NHA SEE 25-41-51-42C FOR NHA SEE 25-41-51-42F FOR NHA SEE 25-41-51-42G FOR NHA SEE 25-41-51-42T FOR NHA		RF
-001J	A225400278-816		. DOOR ASSY-SINGLE used on 070F (25415141Z), 070E (25415142B) SEE 25-41-51-41Z FOR NHA SEE 25-41-51-42B FOR NHA		RF

- ITEM NOT ILLUSTRATED

FIG. ITEM	PART NUMBER	AIRLINE STOCK NUMBER	NOMENCLATURE 1234567	EFF CODE	UNITS PER ASSY
-001K	A225400278-530		. DOOR ASSY-SINGLE used on 070G (25415141Z), 070M (25415142G) SEE 25-41-51-41Z FOR NHA SEE 25-41-51-42G FOR NHA		RF
-001L	A225400278-900		. DOOR ASSY-SINGLE used on 070J (25415141Z), 070L (25415142B), 070H(25415142C), 070B (25415142F), 070C (25415142H), 070F(25415142M) SEE 25-41-51-41Z FOR NHA SEE 25-41-51-42B FOR NHA SEE 25-41-51-42C FOR NHA SEE 25-41-51-42F FOR NHA SEE 25-41-51-42H FOR NHA SEE 25-41-51-42M FOR NHA		RF
-001M	A225400278-822		. DOOR ASSY-SINGLE used on 070C (25415142B) SEE 25-41-51-42B FOR NHA		RF
010A	A225400272-008		. . HINGE used on 001A, 001B, 001C, 001D, 001E, 001F, 001G, 001H, 001J, 001K, 001L, 001M		001
020A	AN565B6H4		. . . SETSCREW used on 010A		002
030A	NAS514P832-6		. . SCREW used on 001A, 001B, 001C, 001D, 001E, 001F, 001G, 001H, 001J, 001K, 001L, 001M		018
040A	0-123-000700000		. . WASHER used on 001A, 001B, 001C, 001D, 001E, 001F, 001G, 001H, 001J, 001K, 001L, 001M		015

- ITEM NOT ILLUSTRATED

FIG. ITEM	PART NUMBER	AIRLINE STOCK NUMBER	NOMENCLATURE 1234567	EFF CODE	UNITS PER ASSY
050A	DAN316-3025		. . SCREW used on 001A, 001B, 001C, 001D, 001E, 001F, 001G, 001H, 001J, 001K, 001L, 001M		026
060A	A225400272-202		. . SECTION used on 001A, 001B, 001C, 001D, 001E, 001F, 001G, 001H, 001J, 001K, 001L, 001M		002
070A	A225400272-205		. . SECTION used on 001A, 001B, 001C, 001D, 001E, 001F, 001G, 001H, 001J, 001K, 001L, 001M		001
080A	NAS514P632-6		. . SCREW used on 001A, 001B, 001C, 001D, 001E, 001F, 001G, 001H, 001J, 001K, 001L, 001M		001
090A	AR197-3		. . HOOK-COAT used on 001A, 001B, 001C, 001D, 001E, 001F, 001G, 001H, 001J, 001K, 001L, 001M		001
-100A	5472R		. . LATCH-LAVATORY SIMPLE DOOR RPLD BY 100B used on 001A, 001B, 001C, 001D, 001E, 001F, 001G, 001H, 001J, 001K, 001L, 001M		001
100B	A8-254-2015-011		. . LATCH-LAVATORY SIMPLE DOOR RPLS 100A used on 001A, 001B, 001C, 001D, 001E, 001F, 001G, 001H, 001J, 001K, 001L, 001M		001

- ITEM NOT ILLUSTRATED

FIG. ITEM	PART NUMBER	AIRLINE STOCK NUMBER	NOMENCLATURE 1234567	EFF CODE	UNITS PER ASSY
102A	A8-254-2015-951		. . . LOCK used on 100B		001
104A	A8-254-2015-931		. . . RELEASE SYSTEM used on 100B		001
106A	A8-254-2014-941		. . . KNOB used on 100B		001
110A	5L0044600109000		. . BOLT-THREADED used on 001A, 001B, 001C, 001D, 001E, 001F, 001G, 001H, 001J, 001K, 001L, 001M		001
120A	1A113-0139-1		. . ASHTRAY ASSY used on 001A, 001B, 001C, 001D, 001E, 001F, 001G, 001H, 001J, 001K, 001L, 001M		002
-123A	1A113-0139-101		. . . COVER-ASHTRAY used on 120A		001
-125A	1A113-0139-103		. . . CASE-ASHTRAY used on 120A		001
130A	2863		. . LATCH ASSY 80477 used on 001A, 001B, 001C, 001E, 001F, 001K		001
135A	AM767B		. . LATCH ASSY used on 001D, 001G, 001H, 001J, 001L, 001M		001
140A	A225400216-222		. . PLATE-SCUFF used on 001A, 001B, 001C, 001D, 001E, 001F, 001G, 001H, 001J, 001K, 001L, 001M		001

- ITEM NOT ILLUSTRATED

FIG. ITEM	PART NUMBER	AIRLINE STOCK NUMBER	NOMENCLATURE 1234567	EFF CODE	UNITS PER ASSY
150A	F2547242620000		. . OUTLET-AIR used on 001A, 001B, 001C, 001D, 001E, 001F, 001G, 001H, 001J, 001K, 001L, 001M		004
160A	ABS0706-25-16		. . SCREW used on 001A, 001B, 001C, 001D, 001E, 001F, 001G, 001H, 001J, 001K, 001L, 001M		008

- ITEM NOT ILLUSTRATED

THIS PAGE IS INTENTIONALLY LEFT BLANK

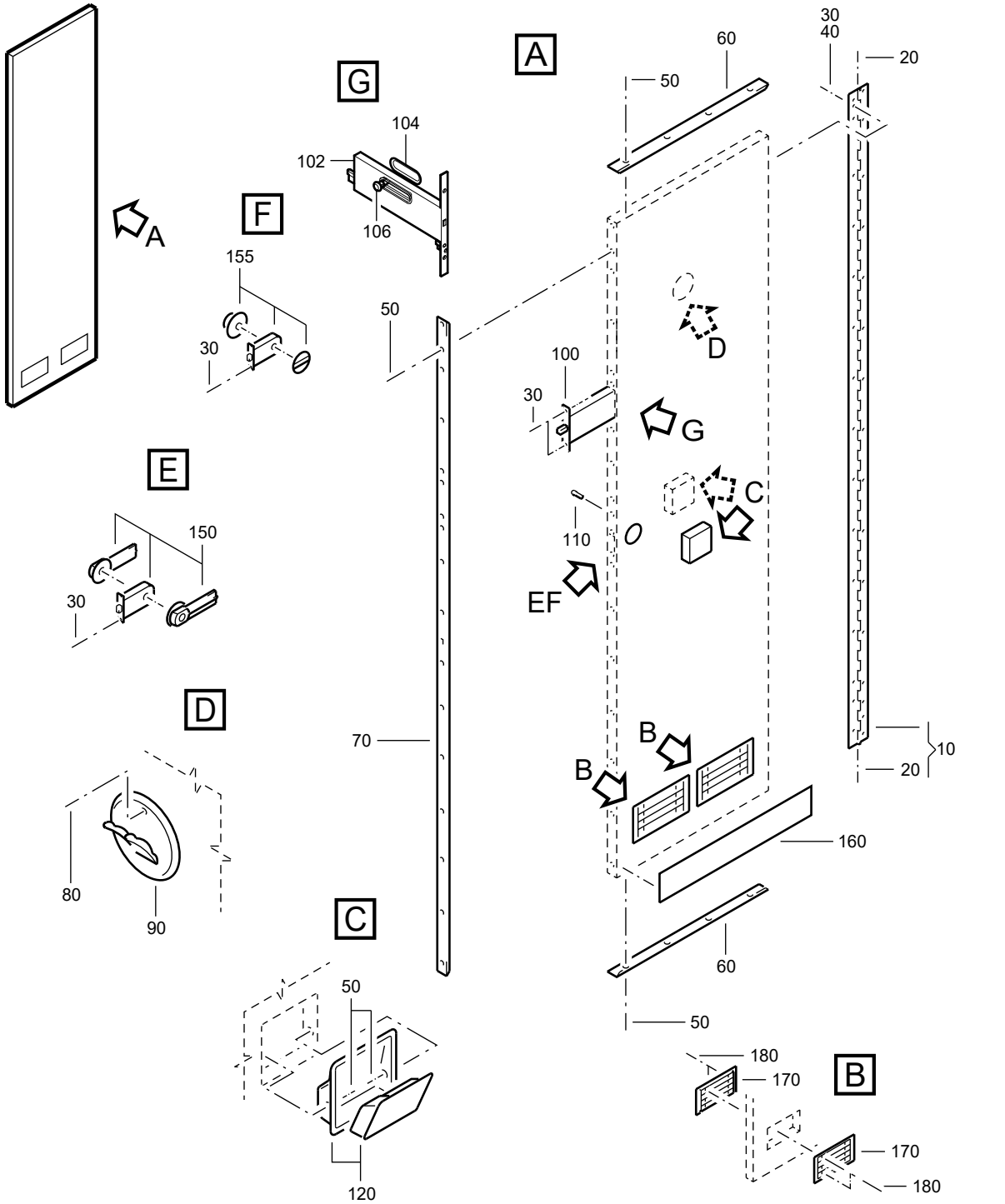

DOOR ASSY-SINGLE
Figure 11L/EN254151SHEET11L01

FIG. ITEM	PART NUMBER	AIRLINE STOCK NUMBER	NOMENCLATURE 1234567	EFF CODE	UNITS PER ASSY
11L					
-001A	A225400276-540		. DOOR ASSY-SINGLE used on 070L (25415141S), 070A (25415141V), 070A(25415141Z), 070F (25415142A) SEE 25-41-51-41S FOR NHA SEE 25-41-51-41V FOR NHA SEE 25-41-51-41Z FOR NHA SEE 25-41-51-42A FOR NHA		RF
-001B	A225400276-970		. DOOR ASSY-SINGLE used on 070G (25415142N), 070G (25415142S) SEE 25-41-51-42N FOR NHA SEE 25-41-51-42S FOR NHA		RF
010A	A225400272-008		. . HINGE used on 001A, 001B		001
020A	AN565B6H4		. . . SETSCREW used on 010A		002
030A	NAS514P832-6		. . SCREW used on 001A, 001B		019
040A	0-123-000700000		. . WASHER used on 001A, 001B		015
050A	DAN316-3025		. . SCREW used on 001A, 001B		026
060A	A225400272-202		. . SECTION used on 001A, 001B		002
070A	A225400272-205		. . SECTION used on 001A, 001B		001
080A	NAS514P632-6		. . SCREW used on 001A, 001B		001

- ITEM NOT ILLUSTRATED

FIG. ITEM	PART NUMBER	AIRLINE STOCK NUMBER	NOMENCLATURE 1234567	EFF CODE	UNITS PER ASSY
090A	AR197-3		. . HOOK-COAT used on 001A, 001B		001
-100A	5472R		. . LATCH-LAVATORY SIMPLE DOOR RPLD BY 100B used on 001A, 001B		001
100B	A8-254-2015-011		. . LATCH-LAVATORY SIMPLE DOOR RPLS 100A used on 001A, 001B		001
102A	A8-254-2015-951		. . . LOCK used on 100B		001
104A	A8-254-2015-931		. . . RELEASE SYSTEM used on 100B		001
106A	A8-254-2014-941		. . . KNOB used on 100B		001
110A	5L0044600109000		. . BOLT-THREADED used on 001A, 001B		001
120A	1A113-0139-1		. . ASHTRAY ASSY used on 001A, 001B		001
-130A	1A113-0139-101		. . . COVER-ASHTRAY used on 120A		001
-140A	1A113-0139-103		. . . CASE-ASHTRAY used on 120A		001
150A	2863		. . LATCH ASSY 80477 used on 001A		001
155A	AM767B		. . LATCH ASSY used on 001B		001

- ITEM NOT ILLUSTRATED

FIG. ITEM	PART NUMBER	AIRLINE STOCK NUMBER	NOMENCLATURE 1234567	EFF CODE	UNITS PER ASSY
160A	A225400216-222		. . PLATE-SCUFF used on 001A, 001B		001
170A	F2547242620000		. . OUTLET-AIR used on 001A, 001B		004
180A	ABS0706-25-16		. . SCREW used on 001A, 001B		008

- ITEM NOT ILLUSTRATED

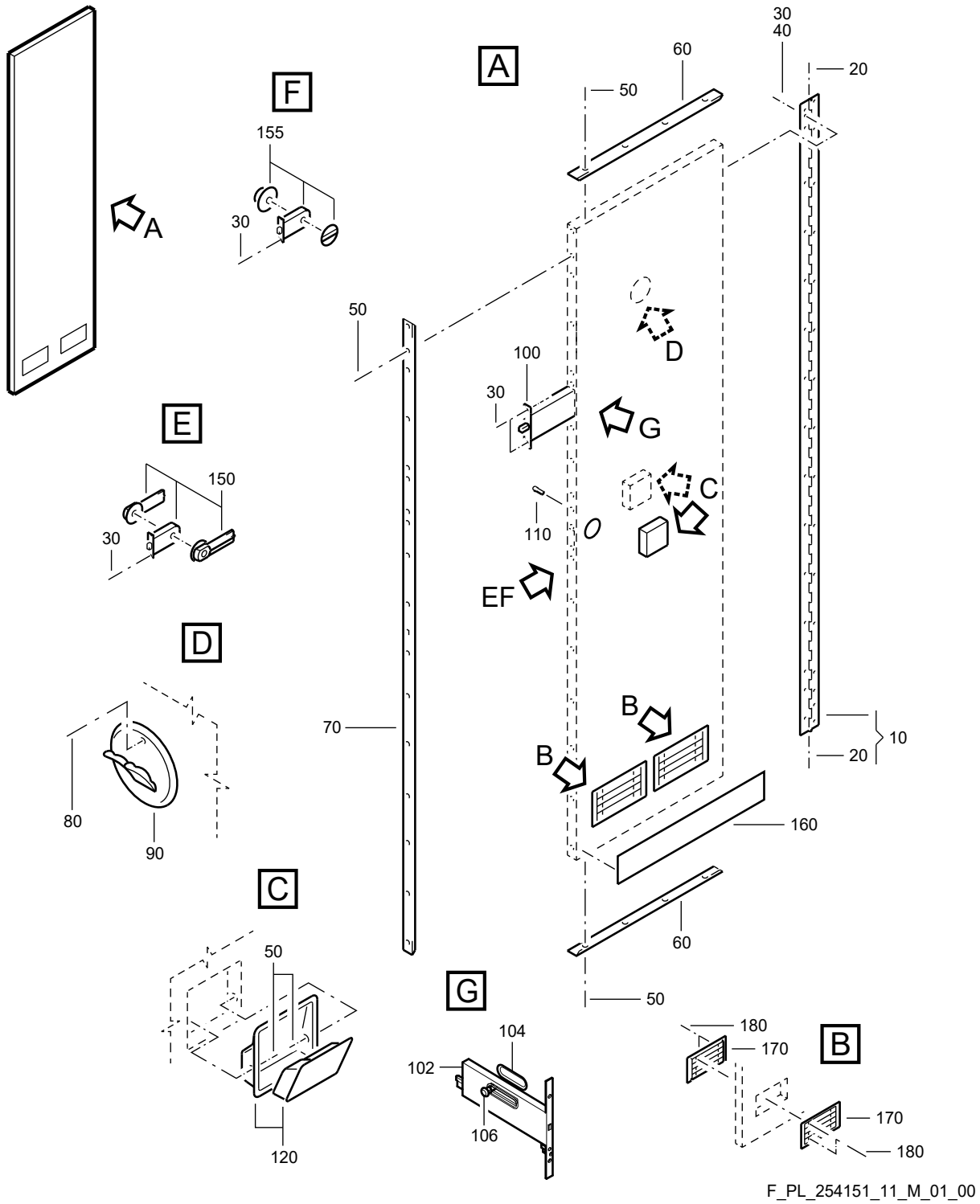

DOOR ASSY-SINGLE
Figure 11M/EN254151SHEET11M01

FIG. ITEM	PART NUMBER	AIRLINE STOCK NUMBER	NOMENCLATURE 1234567	EFF CODE	UNITS PER ASSY
11M					
-001A	A225400278-820		. DOOR ASSY-SINGLE used on 070G (25415142C), 070A (25415142T) SEE 25-41-51-42C FOR NHA SEE 25-41-51-42T FOR NHA		RF
-001B	A225400278-532		. DOOR ASSY-SINGLE used on 070E (25415142D), 070G (25415142G) SEE 25-41-51-42D FOR NHA SEE 25-41-51-42G FOR NHA		RF
-001C	A225400278-828		. DOOR ASSY-SINGLE used on 070G (25415142D), 070C (25415142L), 070H (25415142S) SEE 25-41-51-42D FOR NHA SEE 25-41-51-42L FOR NHA SEE 25-41-51-42S FOR NHA		RF
-001D	A225400278-830		. DOOR ASSY-SINGLE used on 070H (25415142D), 070F (25415142K) SEE 25-41-51-42D FOR NHA SEE 25-41-51-42K FOR NHA		RF
-001E	A225400278-826		. DOOR ASSY-SINGLE used on 070C (25415142F) SEE 25-41-51-42F FOR NHA		RF
-001F	A225400278-534		. DOOR ASSY-SINGLE POST SB 25-1325 used on 070L (25415141M) SEE 25-41-51-41M FOR NHA		RF
-001G	A225400278-540		. DOOR ASSY-SINGLE used on 070J (25415142F), 070B (25415142T) SEE 25-41-51-42F FOR NHA SEE 25-41-51-42T FOR NHA		RF

- ITEM NOT ILLUSTRATED

FIG. ITEM	PART NUMBER	AIRLINE STOCK NUMBER	NOMENCLATURE 1234567	EFF CODE	UNITS PER ASSY
-001H	A225400278-538		. DOOR ASSY-SINGLE used on 070L (25415142F), 070B (25415142H), 070H(25415142Q) SEE 25-41-51-42F FOR NHA SEE 25-41-51-42H FOR NHA SEE 25-41-51-42Q FOR NHA		RF
-001J	A225400278-536		. DOOR ASSY-SINGLE used on 070B (25415142G), 070D (25415142N), 070C (25415142Q), 070E (25415142S) SEE 25-41-51-42G FOR NHA SEE 25-41-51-42N FOR NHA SEE 25-41-51-42Q FOR NHA SEE 25-41-51-42S FOR NHA		RF
-001K	A225400278-834		. DOOR ASSY-SINGLE PRE VSB A2-254-25-106 used on 070G (25415142L), 070A (25415142Q), 070L(25415142T) SEE 25-41-51-42L FOR NHA SEE 25-41-51-42Q FOR NHA SEE 25-41-51-42T FOR NHA		RF
-001L	A225400278-832		. DOOR ASSY-SINGLE used on 070H (25415142J), 070C (25415142P) SEE 25-41-51-42J FOR NHA SEE 25-41-51-42P FOR NHA		RF
-001M	A225400278-838		. DOOR ASSY-SINGLE used on 070E (25415142N), 070H (25415142T) SEE 25-41-51-42N FOR NHA SEE 25-41-51-42T FOR NHA		RF

- ITEM NOT ILLUSTRATED

FIG. ITEM	PART NUMBER	AIRLINE STOCK NUMBER	NOMENCLATURE 1234567	EFF CODE	UNITS PER ASSY
-001N	A225400278-836		. DOOR ASSY-SINGLE used on 070F (25415142N), 070K (25415142T) SEE 25-41-51-42N FOR NHA SEE 25-41-51-42T FOR NHA		RF
-001P	A225400278-928		. DOOR ASSY-SINGLE POST VSB A2-254-25-106 used on 070M (25415142L), 070M (25415142T) SEE 25-41-51-42L FOR NHA SEE 25-41-51-42T FOR NHA		RF
010A	A225400272-008		. . HINGE used on 001A, 001B, 001C, 001D, 001E, 001F, 001G, 001H, 001J, 001K, 001L, 001M, 001N, 001P		001
020A	AN565B6H4		. . . SETSCREW used on 010A		002
030A	NAS514P832-6		. . SCREW used on 001A, 001B, 001C, 001D, 001E, 001F, 001G, 001H, 001J, 001K, 001L, 001M, 001N, 001P		019
040A	0-123-000700000		. . WASHER used on 001A, 001B, 001C, 001D, 001E, 001F, 001G, 001H, 001J, 001K, 001L, 001M, 001N, 001P		015
050A	DAN316-3025		. . SCREW PRE VSB A2-254-25-106 used on 001A, 001B, 001C, 001D, 001E, 001F, 001G, 001H, 001J, 001K, 001L, 001M, 001N		026

- ITEM NOT ILLUSTRATED

FIG. ITEM	PART NUMBER	AIRLINE STOCK NUMBER	NOMENCLATURE 1234567	EFF CODE	UNITS PER ASSY
-050B	DAN316-3025		. . SCREW POST VSB A2-254-25-106 used on 001P		024
060A	A225400272-202		. . SECTION used on 001A, 001B, 001C, 001D, 001E, 001F, 001G, 001H, 001J, 001K, 001L, 001M, 001N, 001P		002
070A	A225400272-205		. . SECTION used on 001A, 001B, 001C, 001D, 001E, 001F, 001G, 001H, 001J, 001K, 001L, 001M, 001N, 001P		001
080A	NAS514P632-6		. . SCREW used on 001A, 001B, 001C, 001D, 001E, 001F, 001G, 001H, 001J, 001K, 001L, 001M, 001N, 001P		001
090A	AR197-3		. . HOOK-COAT used on 001A, 001B, 001C, 001D, 001E, 001F, 001G, 001H, 001J, 001K, 001L, 001M, 001N, 001P		001
-100A	5472R		. . LATCH-LAVATORY SIMPLE DOOR RPLD BY 100B PRE VSB A2-254-25-106 used on 001A, 001B, 001C, 001D, 001E, 001F, 001G, 001H, 001J, 001K, 001L, 001M, 001N		001

- ITEM NOT ILLUSTRATED

FIG. ITEM	PART NUMBER	AIRLINE STOCK NUMBER	NOMENCLATURE 1234567	EFF CODE	UNITS PER ASSY
100B	A8-254-2015-011		. . LATCH-LAVATORY SIMPLE DOOR RPLS 100A POST VSB A2-254-25-106 used on 001A, 001B, 001C, 001D, 001E, 001F, 001G, 001H, 001J, 001K, 001L, 001M, 001N, 001P		001
102A	A8-254-2015-951		. . . LOCK used on 100B		001
104A	A8-254-2015-931		. . . RELEASE SYSTEM used on 100B		001
106A	A8-254-2014-941		. . . KNOB used on 100B		001
110A	5L0044600109000		. . BOLT-THREADED used on 001A, 001B, 001C, 001D, 001E, 001F, 001G, 001H, 001J, 001K, 001L, 001M, 001N, 001P		001
120A	1A113-0139-1		. . ASHTRAY ASSY used on 001A, 001B, 001C, 001D, 001E, 001F, 001G, 001H, 001J, 001K, 001L, 001M, 001N, 001P		002
-130A	1A113-0139-101		. . . COVER-ASHTRAY used on 120A		001
-140A	1A113-0139-103		. . . CASE-ASHTRAY used on 120A		001
150A	AM767B		. . LATCH ASSY used on 001A, 001C, 001D, 001E, 001K, 001L, 001M, 001N, 001P		001

- ITEM NOT ILLUSTRATED

FIG. ITEM	PART NUMBER	AIRLINE STOCK NUMBER	NOMENCLATURE 1234567	EFF CODE	UNITS PER ASSY
155A	2863		. . LATCH ASSY 80477 used on 001B, 001F, 001G, 001H, 001J		001
160A	A225400216-222		. . PLATE-SCUFF PRE VSB A2-254-25-106 used on 001A, 001B, 001C, 001D, 001E, 001F, 001G, 001H, 001J, 001K, 001L, 001M, 001N		001
-160B	R225400211-004		. . PLATE-SCUFF POST VSB A2-254-25-106 used on 001P		001
170A	F2547242620000		. . OUTLET-AIR used on 001A, 001B, 001C, 001D, 001E, 001F, 001G, 001H, 001J, 001K, 001L, 001M, 001N, 001P		004
180A	ABS0706-25-16		. . SCREW used on 001A, 001B, 001C, 001D, 001E, 001F, 001G, 001H, 001J, 001K, 001L, 001M, 001N, 001P		008

- ITEM NOT ILLUSTRATED

THIS PAGE IS INTENTIONALLY LEFT BLANK

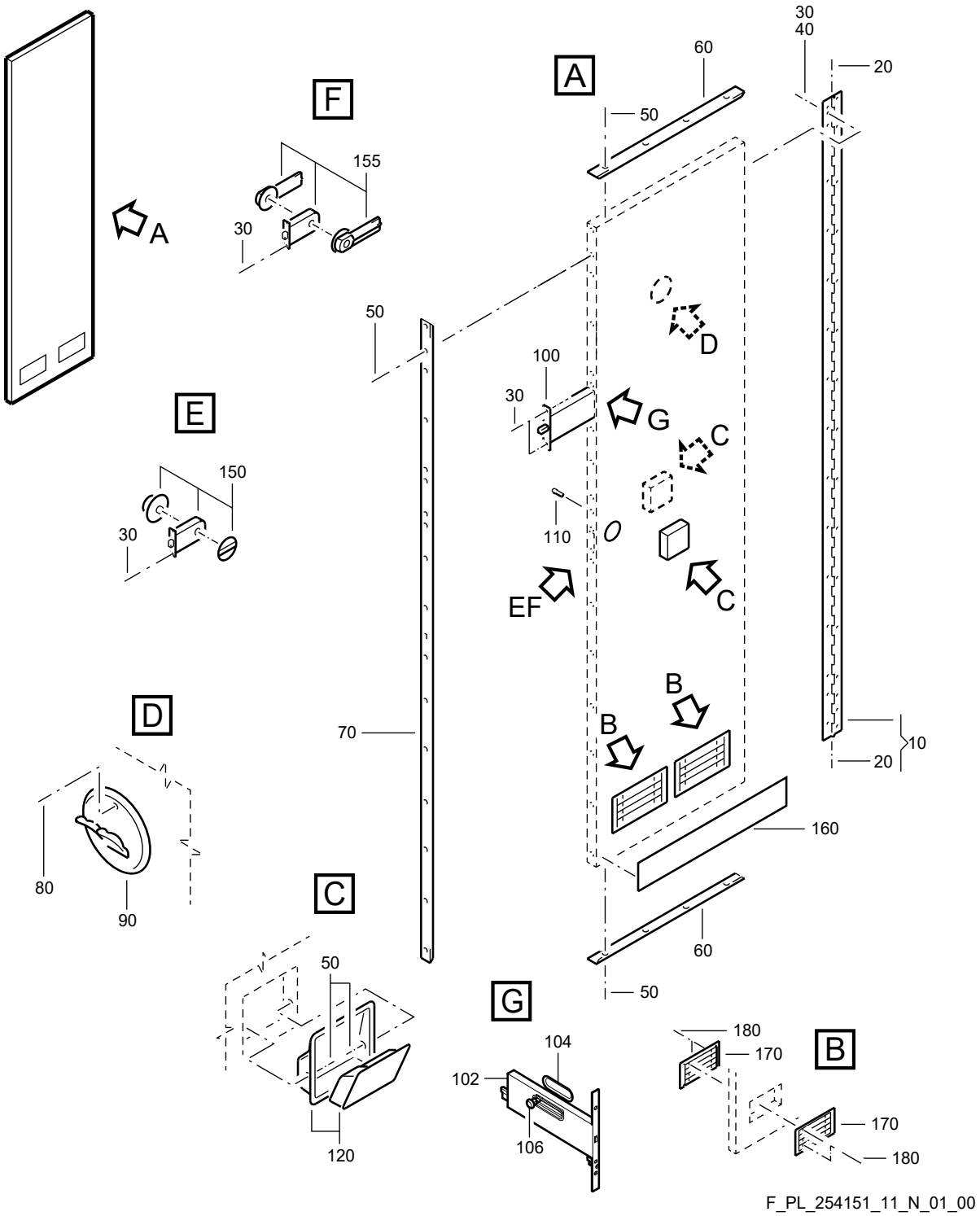

DOOR ASSY-SINGLE
Figure 11N/EN254151SHEET11N01

FIG. ITEM	PART NUMBER	AIRLINE STOCK NUMBER	NOMENCLATURE 1234567	EFF CODE	UNITS PER ASSY
11N					
-001A	A2254002768912		. DOOR ASSY-SINGLE POST SB 25-1314 used on 070C (25415141B) SEE 25-41-51-41B FOR NHA		RF
-001B	A2254002768930		. DOOR ASSY-SINGLE POST SB 25-1314 used on 070A (25415101Q), 070K (25415101S), 070C (25415101V), 070B (25415101W), 070E (25415101Z), 070K(25415141B), 070E (25415141D), 070B (25415141G), 070K(25415141M), 070A (25415141N), 070C (25415141W) SEE 25-41-51-01Q FOR NHA SEE 25-41-51-01S FOR NHA SEE 25-41-51-01V FOR NHA SEE 25-41-51-01W FOR NHA SEE 25-41-51-01Z FOR NHA SEE 25-41-51-41B FOR NHA SEE 25-41-51-41D FOR NHA SEE 25-41-51-41G FOR NHA SEE 25-41-51-41M FOR NHA SEE 25-41-51-41N FOR NHA SEE 25-41-51-41W FOR NHA		RF
-001C	A2254002768508		. DOOR ASSY-SINGLE POST SB 25-1314 PRE VSB A2-254-25-032 used on 070F (25415101L) SEE 25-41-51-01L FOR NHA		RF

- ITEM NOT ILLUSTRATED

FIG. ITEM	PART NUMBER	AIRLINE STOCK NUMBER	NOMENCLATURE 1234567	EFF CODE	UNITS PER ASSY
-001D	A2254002768942		. DOOR ASSY-SINGLE POST SB 25-1314 used on 070J (25415101Z), 070L (25415141K), 070J(25415141L), 070J (25415141R), 070H (25415141W), 070H(25415141X) SEE 25-41-51-01Z FOR NHA SEE 25-41-51-41K FOR NHA SEE 25-41-51-41L FOR NHA SEE 25-41-51-41R FOR NHA SEE 25-41-51-41W FOR NHA SEE 25-41-51-41X FOR NHA		RF
-001E	A2254002768578		. DOOR ASSY-SINGLE POST SB 25-1314 used on 070G (25415101T), 070J (25415142D), 070E(25415142K) SEE 25-41-51-01T FOR NHA SEE 25-41-51-42D FOR NHA SEE 25-41-51-42K FOR NHA		RF
-001F	A2254002768574		. DOOR ASSY-SINGLE POST SB 25-1314 PRE VSB A2-254-25-032 used on 070D (254151410), 070D (25415141P), 070H(25415141R) SEE 25-41-51-410 FOR NHA SEE 25-41-51-41P FOR NHA SEE 25-41-51-41R FOR NHA		RF
-001G	A2254002768948		. DOOR ASSY-SINGLE POST SB 25-1314 used on 070L (25415142C) SEE 25-41-51-42C FOR NHA		RF

- ITEM NOT ILLUSTRATED

FIG. ITEM	PART NUMBER	AIRLINE STOCK NUMBER	NOMENCLATURE 1234567	EFF CODE	UNITS PER ASSY
-001H	A2254002768506		. DOOR ASSY-SINGLE POST SB 25-1314 used on 070A (25415101N), 070M (25415101Q) SEE 25-41-51-01N FOR NHA SEE 25-41-51-01Q FOR NHA		RF
-001J	A2254002768594		. DOOR ASSY-SINGLE POST SB 25-1314 used on 070M (25415141D) SEE 25-41-51-41D FOR NHA		RF
-001K	A2254002768508		. DOOR ASSY-SINGLE POST VSB A2-254-25-032 used on 070M (25415101L) SEE 25-41-51-01L FOR NHA		RF
-001L	A2254002768574		. DOOR ASSY-SINGLE POST VSB A2-254-25-032 used on 070N (254151410), 070N (25415141R) SEE 25-41-51-410 FOR NHA SEE 25-41-51-41R FOR NHA		RF
010A	A225400272-008		. . HINGE used on 001A, 001B, 001C, 001D, 001E, 001F, 001G, 001H, 001J, 001K, 001L		001
020A	AN565B6H4		. . . SETSCREW used on 010A		002
030A	NAS514P832-6		. . SCREW used on 001A, 001B, 001C, 001D, 001E, 001F, 001G, 001H, 001J, 001K, 001L		019

- ITEM NOT ILLUSTRATED

FIG. ITEM	PART NUMBER	AIRLINE STOCK NUMBER	NOMENCLATURE 1234567	EFF CODE	UNITS PER ASSY
040A	0-123-000700000		. . WASHER used on 001A, 001B, 001C, 001D, 001E, 001F, 001G, 001H, 001J, 001K, 001L		015
050A	DAN316-3025		. . SCREW used on 001A, 001B, 001C, 001D, 001E, 001F, 001G, 001H, 001J, 001K, 001L		026
060A	A225400272-202		. . SECTION used on 001A, 001B, 001C, 001D, 001E, 001F, 001G, 001H, 001J, 001K, 001L		002
070A	A225400272-205		. . SECTION used on 001A, 001B, 001C, 001D, 001E, 001F, 001G, 001H, 001J, 001K, 001L		001
080A	NAS514P632-6		. . SCREW used on 001A, 001B, 001C, 001D, 001E, 001F, 001G, 001H, 001J, 001K, 001L		001
090A	AR197-3		. . HOOK-COAT used on 001A, 001B, 001C, 001D, 001E, 001F, 001G, 001H, 001J, 001K, 001L		001
100A	5472R		. . LATCH-LAVATORY SIMPLE DOOR RPLD BY 100B used on 001A, 001B, 001C, 001D, 001E, 001F, 001G, 001H, 001J, 001K, 001L		001

- ITEM NOT ILLUSTRATED

FIG. ITEM	PART NUMBER	AIRLINE STOCK NUMBER	NOMENCLATURE 1234567	EFF CODE	UNITS PER ASSY
100B	A8-254-2015-011		. . LATCH-LAVATORY SIMPLE DOOR RPLS 100A used on 001A, 001B, 001C, 001D, 001E, 001F, 001G, 001H, 001J, 001K, 001L		001
102A	A8-254-2015-951		. . . LOCK used on 100B		001
104A	A8-254-2015-931		. . . RELEASE SYSTEM used on 100B		001
106A	A8-254-2014-941		. . . KNOB used on 100B		001
110A	5L0044600109000		. . BOLT-THREADED used on 001A, 001B, 001C, 001D, 001E, 001F, 001G, 001H, 001J, 001K, 001L		001
120A	1A113-0139-1		. . ASHTRAY ASSY used on 001A, 001B, 001C, 001D, 001E, 001F, 001G, 001H, 001J, 001K, 001L		002
-130A	1A113-0139-101		. . . COVER-ASHTRAY used on 120A		001
-140A	1A113-0139-103		. . . CASE-ASHTRAY used on 120A		001
150A	AM767B		. . LATCH ASSY used on 001A, 001B, 001D, 001G		001
155A	2863		. . LATCH ASSY 80477 used on 001C, 001E, 001F, 001H, 001J, 001K, 001L		001

- ITEM NOT ILLUSTRATED

FIG. ITEM	PART NUMBER	AIRLINE STOCK NUMBER	NOMENCLATURE 1234567	EFF CODE	UNITS PER ASSY
160A	A225400211-216		. . PLATE-SCUFF used on 001A, 001B, 001D, 001E, 001G, 001H, 001J		001
-160B	A225400216-222		. . PLATE-SCUFF POST VSB A2-254-25-032 used on 001K, 001L		001
170A	F2547242620000		. . OUTLET-AIR used on 001A, 001B, 001C, 001D, 001E, 001F, 001G, 001H, 001J, 001K, 001L		004
180A	ABS0706-25-16		. . SCREW used on 001A, 001B, 001C, 001D, 001E, 001F, 001G, 001H, 001J, 001K, 001L		008

- ITEM NOT ILLUSTRATED

THIS PAGE IS INTENTIONALLY LEFT BLANK

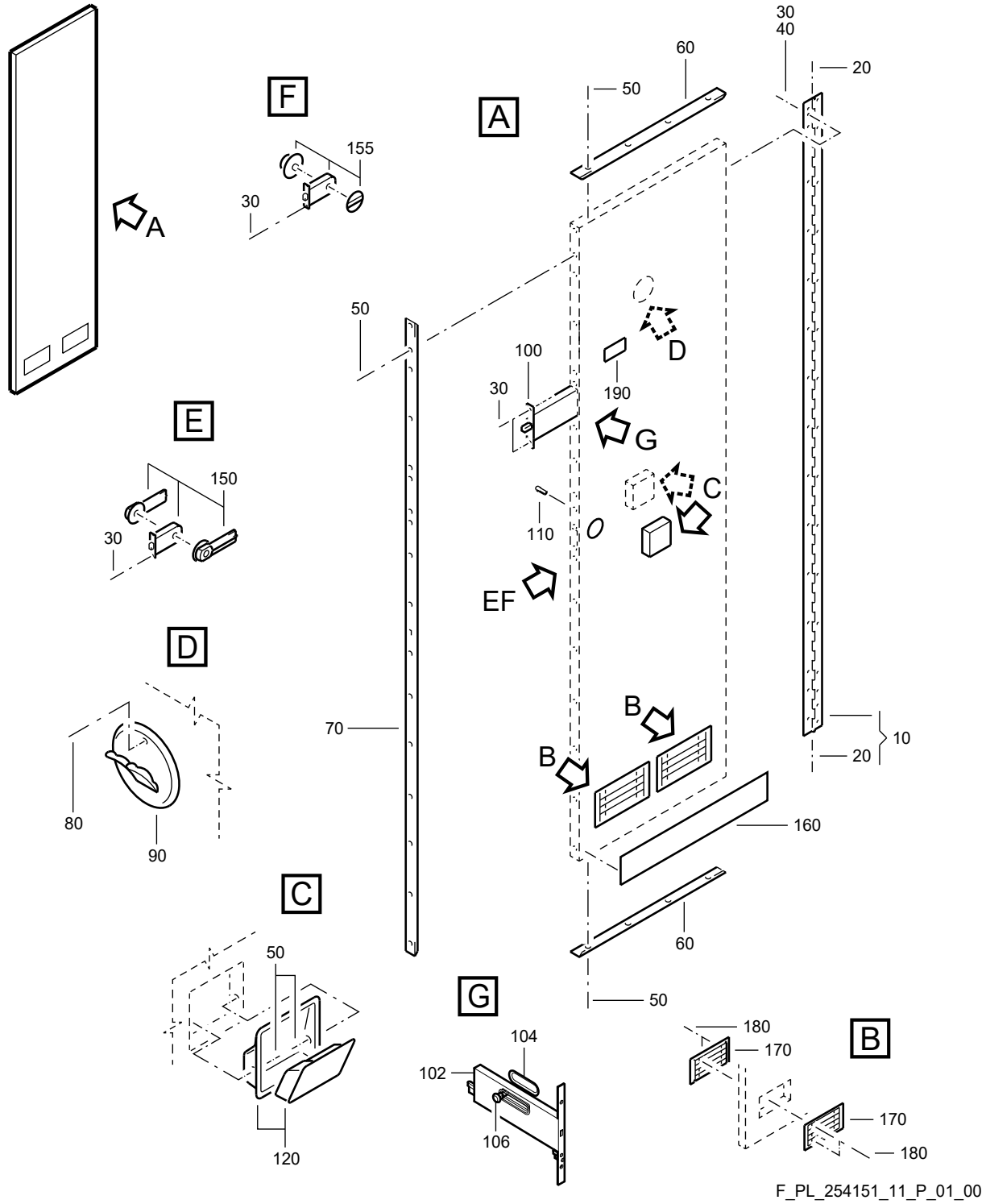

DOOR ASSY-SINGLE
Figure 11P/EN254151SHEET11P01

FIG. ITEM	PART NUMBER	AIRLINE STOCK NUMBER	NOMENCLATURE 1234567	EFF CODE	UNITS PER ASSY
11P					
-001A	A225400278-840		. DOOR ASSY-SINGLE used on 070A (25415142P) SEE 25-41-51-42P FOR NHA		RF
-001B	A225400278-842		. DOOR ASSY-SINGLE used on 070D (25415142Q), 070E (25415142U) SEE 25-41-51-42Q FOR NHA SEE 25-41-51-42U FOR NHA		RF
-001C	A225400278-844		. DOOR ASSY-SINGLE used on 070G (25415142Q) SEE 25-41-51-42Q FOR NHA		RF
-001D	A225400278-846		. DOOR ASSY-SINGLE used on 070K (25415142Q) SEE 25-41-51-42Q FOR NHA		RF
-001E	A225400278-848		. DOOR ASSY-SINGLE used on 070A (25415142R), 070D (25415142U) SEE 25-41-51-42R FOR NHA SEE 25-41-51-42U FOR NHA		RF
-001F	A225400278-850		. DOOR ASSY-SINGLE used on 070F (25415142R), 070L (25415142S) SEE 25-41-51-42R FOR NHA SEE 25-41-51-42S FOR NHA		RF
-001G	A225400278-542		. DOOR ASSY-SINGLE used on 070K (25415142R) SEE 25-41-51-42R FOR NHA		RF
-001H	A225400278-544		. DOOR ASSY-SINGLE used on 070F (25415142U) SEE 25-41-51-42U FOR NHA		RF

- ITEM NOT ILLUSTRATED

FIG. ITEM	PART NUMBER	AIRLINE STOCK NUMBER	NOMENCLATURE 1234567	EFF CODE	UNITS PER ASSY
-001J	A225400278-564		. DOOR ASSY-SINGLE used on 070L (25415142H) SEE 25-41-51-42H FOR NHA		RF
-001K	A225400278-866		. DOOR ASSY-SINGLE POST SB 25-1482 used on 070B (25415142K) SEE 25-41-51-42K FOR NHA		RF
010A	A225400272-008		. . HINGE used on 001A, 001B, 001C, 001D, 001E, 001F, 001G, 001H, 001J, 001K		001
020A	AN565B6H4		. . . SETSCREW used on 010A		002
030A	NAS514P832-6		. . SCREW used on 001A, 001B, 001C, 001D, 001E, 001F, 001G, 001H, 001J, 001K		019
040A	0-123-000700000		. . WASHER used on 001A, 001B, 001C, 001D, 001E, 001F, 001G, 001H, 001J, 001K		015
050A	DAN316-3025		. . SCREW used on 001A, 001B, 001C, 001D, 001E, 001F, 001G, 001H, 001J, 001K		026
060A	A225400272-202		. . SECTION used on 001A, 001B, 001C, 001D, 001E, 001F, 001G, 001H, 001J, 001K		002

- ITEM NOT ILLUSTRATED

FIG. ITEM	PART NUMBER	AIRLINE STOCK NUMBER	NOMENCLATURE 1234567	EFF CODE	UNITS PER ASSY
070A	A225400272-205		. . SECTION used on 001A, 001B, 001C, 001D, 001E, 001F, 001G, 001H, 001J, 001K		001
080A	NAS514P632-6		. . SCREW used on 001A, 001B, 001C, 001D, 001E, 001F, 001G, 001H, 001J, 001K		001
090A	AR197-3		. . HOOK-COAT used on 001A, 001B, 001C, 001D, 001E, 001F, 001G, 001H, 001J, 001K		001
-100A	5472R		. . LATCH-LAVATORY SIMPLE DOOR RPLD BY 100B used on 001A, 001B, 001C, 001D, 001E, 001F, 001G, 001H, 001J, 001K		001
100B	A8-254-2015-011		. . LATCH-LAVATORY SIMPLE DOOR RPLS 100A used on 001A, 001B, 001C, 001D, 001E, 001F, 001G, 001H, 001J, 001K		001
102A	A8-254-2015-951		. . . LOCK used on 100B		001
104A	A8-254-2015-931		. . . RELEASE SYSTEM used on 100B		001
106A	A8-254-2014-941		. . . KNOB used on 100B		001

- ITEM NOT ILLUSTRATED

FIG. ITEM	PART NUMBER	AIRLINE STOCK NUMBER	NOMENCLATURE 1234567	EFF CODE	UNITS PER ASSY
110A	5L0044600109000		. . BOLT-THREADED used on 001A, 001B, 001C, 001D, 001E, 001F, 001G, 001H, 001J, 001K		001
120A	1A113-0139-1		. . ASHTRAY ASSY used on 001A, 001B, 001C, 001D, 001E, 001F, 001G, 001H, 001J, 001K		002
-130A	1A113-0139-101		. . . COVER-ASHTRAY used on 120A		001
-140A	1A113-0139-103		. . . CASE-ASHTRAY used on 120A		001
150A	AM767B		. . LATCH ASSY used on 001A, 001B, 001C, 001D, 001E, 001F, 001K		001
155A	2863		. . LATCH ASSY 80477 used on 001G, 001H, 001J		001
160A	A225400216-222		. . PLATE-SCUFF used on 001A, 001B, 001C, 001D, 001E, 001F, 001G, 001H, 001J, 001K		001
170A	F2547242620000		. . OUTLET-AIR used on 001A, 001B, 001C, 001D, 001E, 001F, 001G, 001H, 001J, 001K		004
180A	ABS0706-25-16		. . SCREW used on 001A, 001B, 001C, 001D, 001E, 001F, 001G, 001H, 001J, 001K		008
190A	D2527715622700		. . PLACARD-LAVATORY used on 001J		001

- ITEM NOT ILLUSTRATED

THIS PAGE IS INTENTIONALLY LEFT BLANK

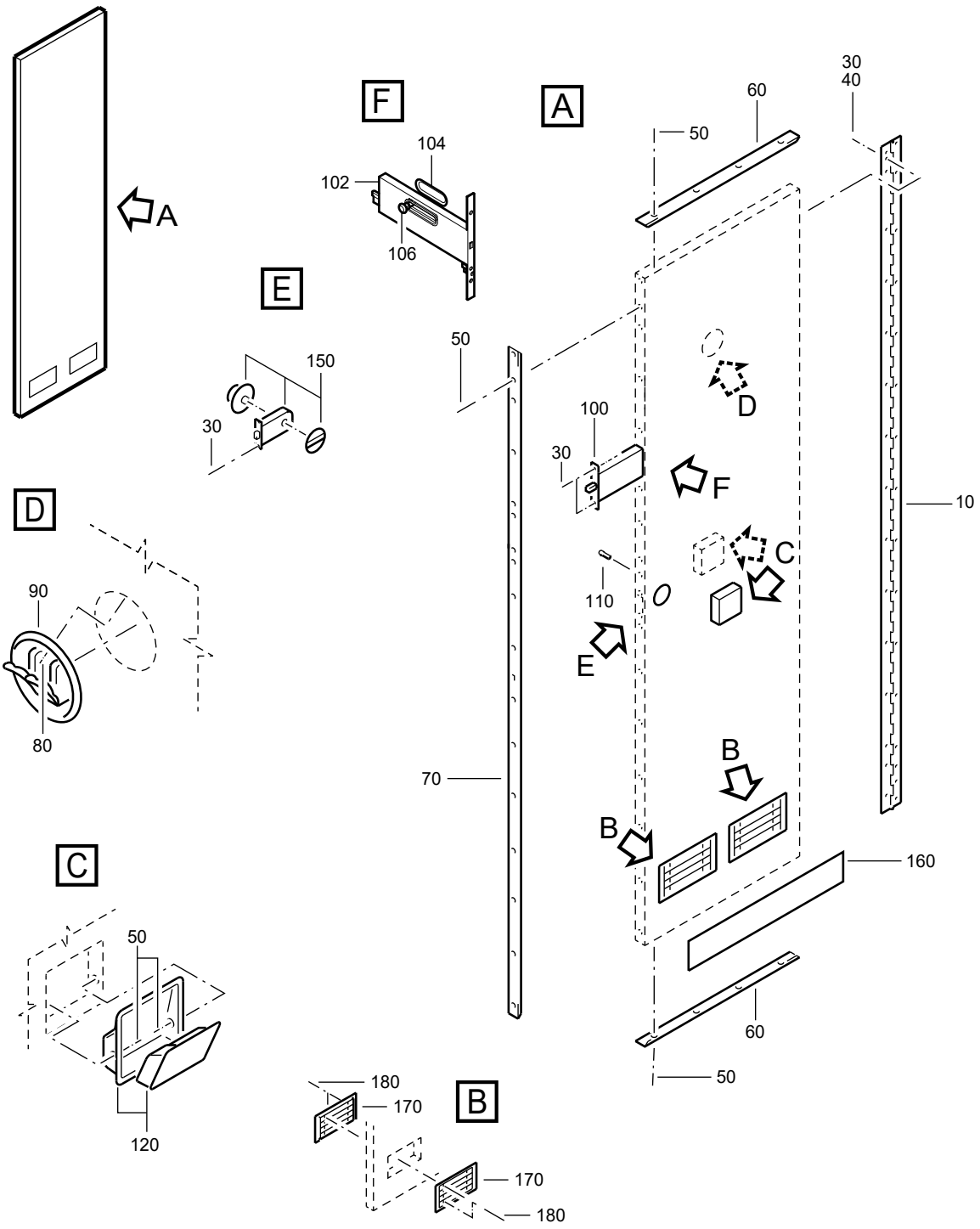

F_PL_254151_11_Q_01_00

DOOR ASSY-SINGLE
Figure 11Q/EN254151SHEET11Q01

FIG. ITEM	PART NUMBER	AIRLINE STOCK NUMBER	NOMENCLATURE 1234567	EFF CODE	UNITS PER ASSY
11Q					
-001A	A2254002708508		. DOOR ASSY-SINGLE POST SB 25-1314 PRE VSB A2-254-25-032 used on 070H (25415101C), 070J (25415101H), 070L(25415101K), 070J (25415101L) SEE 25-41-51-01C FOR NHA SEE 25-41-51-01H FOR NHA SEE 25-41-51-01K FOR NHA SEE 25-41-51-01L FOR NHA		RF
-001B	A2254002708516		. DOOR ASSY-SINGLE POST SB 25-1314 used on 070C (25415101C) SEE 25-41-51-01C FOR NHA		RF
-001C	A2254002708526		. DOOR ASSY-SINGLE POST SB 25-1314 used on 070K (25415101L) SEE 25-41-51-01L FOR NHA		RF
-001D	A2254002708506		. DOOR ASSY-SINGLE POST SB 25-1314 used on 070F (25415101G), 070F (25415141T) SEE 25-41-51-01G FOR NHA SEE 25-41-51-41T FOR NHA		RF
-001E	A2254002708502		. DOOR ASSY-SINGLE POST SB 25-1314 used on 070J (25415101G) SEE 25-41-51-01G FOR NHA		RF
-001F	A2254002708508		. DOOR ASSY-SINGLE POST VSB A2-254-25-032 used on 070L (25415101H), 070L (25415101L) SEE 25-41-51-01H FOR NHA SEE 25-41-51-01K FOR NHA		RF

- ITEM NOT ILLUSTRATED

FIG. ITEM	PART NUMBER	AIRLINE STOCK NUMBER	NOMENCLATURE 1234567	EFF CODE	UNITS PER ASSY
010A	A225400272-000		. . HINGE used on 001A, 001B, 001C, 001D, 001E, 001F		001
-020A	AN565B6H4		. . . SETSCREW used on 010A		002
030A	NAS514P832-6		. . SCREW used on 001A, 001B, 001C, 001D, 001E, 001F		019
040A	0-123-000700000		. . WASHER used on 001A, 001B, 001C, 001D, 001E, 001F		015
050A	DAN316-3025		. . SCREW used on 001A, 001B, 001C, 001D, 001E, 001F		026
060A	A225400272-202		. . SECTION used on 001A, 001B, 001C, 001D, 001E, 001F		002
070A	A225400272-205		. . SECTION used on 001A, 001B, 001C, 001D, 001E, 001F		001
080A	NAS514P632-6		. . SCREW used on 001A, 001B, 001C, 001D, 001E, 001F		001
090A	AR197-3		. . HOOK-COAT used on 001A, 001B, 001C, 001D, 001E, 001F		001
-100A	5472R		. . LATCH-LAVATORY SIMPLE DOOR RPLD BY 100B used on 001A, 001B, 001C, 001D, 001E, 001F		001

- ITEM NOT ILLUSTRATED

FIG. ITEM	PART NUMBER	AIRLINE STOCK NUMBER	NOMENCLATURE 1234567	EFF CODE	UNITS PER ASSY
100B	A8-254-2015-011		. . LATCH-LAVATORY SIMPLE DOOR RPLS 100A used on 001A, 001B, 001C, 001D, 001E, 001F		001
102A	A8-254-2015-951		. . . LOCK used on 100B		001
104A	A8-254-2015-931		. . . RELEASE SYSTEM used on 100B		001
106A	A8-254-2014-941		. . . KNOB used on 100B		001
110A	5L0044600109000		. . BOLT-THREADED used on 001A, 001B, 001C, 001D, 001E, 001F		001
120A	1A113-0139-1		. . ASHTRAY ASSY used on 001A, 001B, 001C, 001D, 001E, 001F		002
-130A	1A113-0139-101		. . . COVER-ASHTRAY used on 120A		001
-140A	1A113-0139-103		. . . CASE-ASHTRAY used on 120A		001
150A	2863		. . LATCH ASSY 80477 used on 001A, 001B, 001C, 001D, 001E, 001F		001
160A	A225400211-216		. . PLATE-SCUFF PRE VSB A2-254-25-032 used on 001A, 001B, 001C, 001D, 001E		001
-160B	A225400216-222		. . PLATE-SCUFF POST VSB A2-254-25-032 used on 001F		001

- ITEM NOT ILLUSTRATED

FIG. ITEM	PART NUMBER	AIRLINE STOCK NUMBER	NOMENCLATURE 1234567	EFF CODE	UNITS PER ASSY
170A	F2547242620000		. . OUTLET-AIR used on 001A, 001B, 001C, 001D, 001E, 001F		004
180A	ABS0706-25-16		. . SCREW used on 001A, 001B, 001C, 001D, 001E, 001F		008

- ITEM NOT ILLUSTRATED

THIS PAGE IS INTENTIONALLY LEFT BLANK

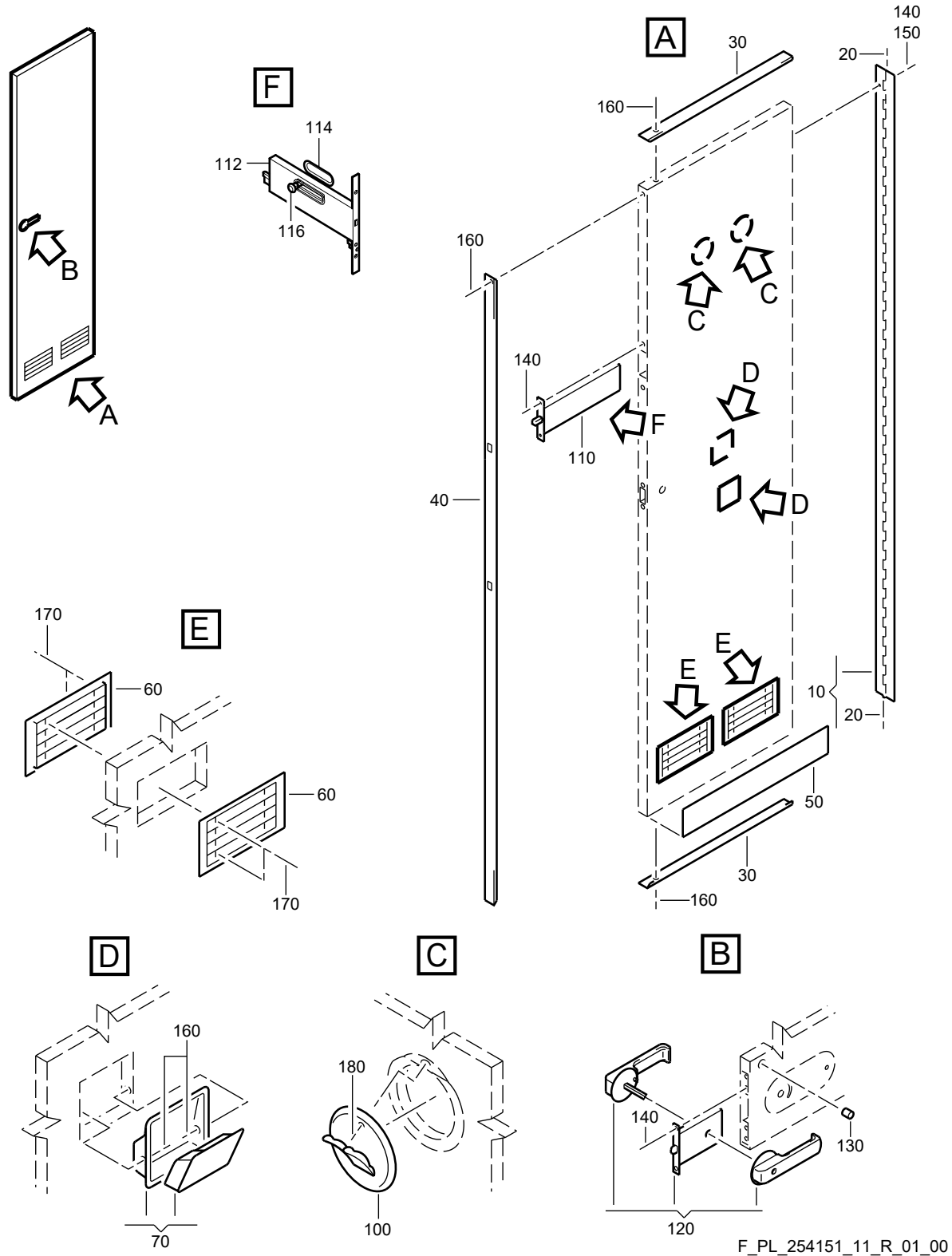

F_PL_254151_11_R_01_00

DOOR ASSY-SINGLE
Figure 11R/EN254151SHEET11R01

FIG. ITEM	PART NUMBER	AIRLINE STOCK NUMBER	NOMENCLATURE 1234567	EFF CODE	UNITS PER ASSY
11R					
-001A	A225400263-902		. DOOR ASSY-SINGLE POST SB 25-1674 used on 070M (25415141M), 070M (25415142N) SEE 25-41-51-41M FOR NHA SEE 25-41-51-42N FOR NHA		RF
010A	A225400272-008		. . HINGE used on 001A		001
020A	AN565B6H4		. . . SETSCREW used on 010A		002
030A	A225400272-202		. . SECTION used on 001A		002
040A	A225400272-205		. . SECTION used on 001A		001
050A	A225400216-222		. . PLATE-SCUFF used on 001A		001
060A	F2547242620000		. . OUTLET-AIR used on 001A		004
070A	A825400503-000		. . ASHTRAY ASSY used on 001A		002
-080A	A825400503-204		. . . COVER-ASHTRAY used on 070A		001
-090A	A825400503-200		. . . CASE-ASHTRAY used on 070A		001
100A	A2028-9		. . HOOK-COAT used on 001A		002
110A	A8-254-2015-013		. . LATCH-LAVATORY SIMPLE DOOR used on 001A		001

- ITEM NOT ILLUSTRATED

FIG. ITEM	PART NUMBER	AIRLINE STOCK NUMBER	NOMENCLATURE 1234567	EFF CODE	UNITS PER ASSY
112A	A8-254-2015-951		. . . LOCK used on 110A		001
114A	A8-254-2015-931		. . . RELEASE SYSTEM used on 110A		001
116A	A8-254-2014-941		. . . KNOB used on 110A		001
120A	AM767B		. . LATCH ASSY used on 001A		001
130A	5L0044600109000		. . BOLT-THREADED used on 001A		001
140A	NAS514P832-6		. . SCREW used on 001A		019
150A	0-123-000700000		. . WASHER used on 001A		015
160A	DAN316-3025		. . SCREW used on 001A		026
170A	ABS0706-25-16		. . SCREW used on 001A		008
180A	NAS514P632-6		. . SCREW used on 001A		002

- ITEM NOT ILLUSTRATED

THIS PAGE IS INTENTIONALLY LEFT BLANK

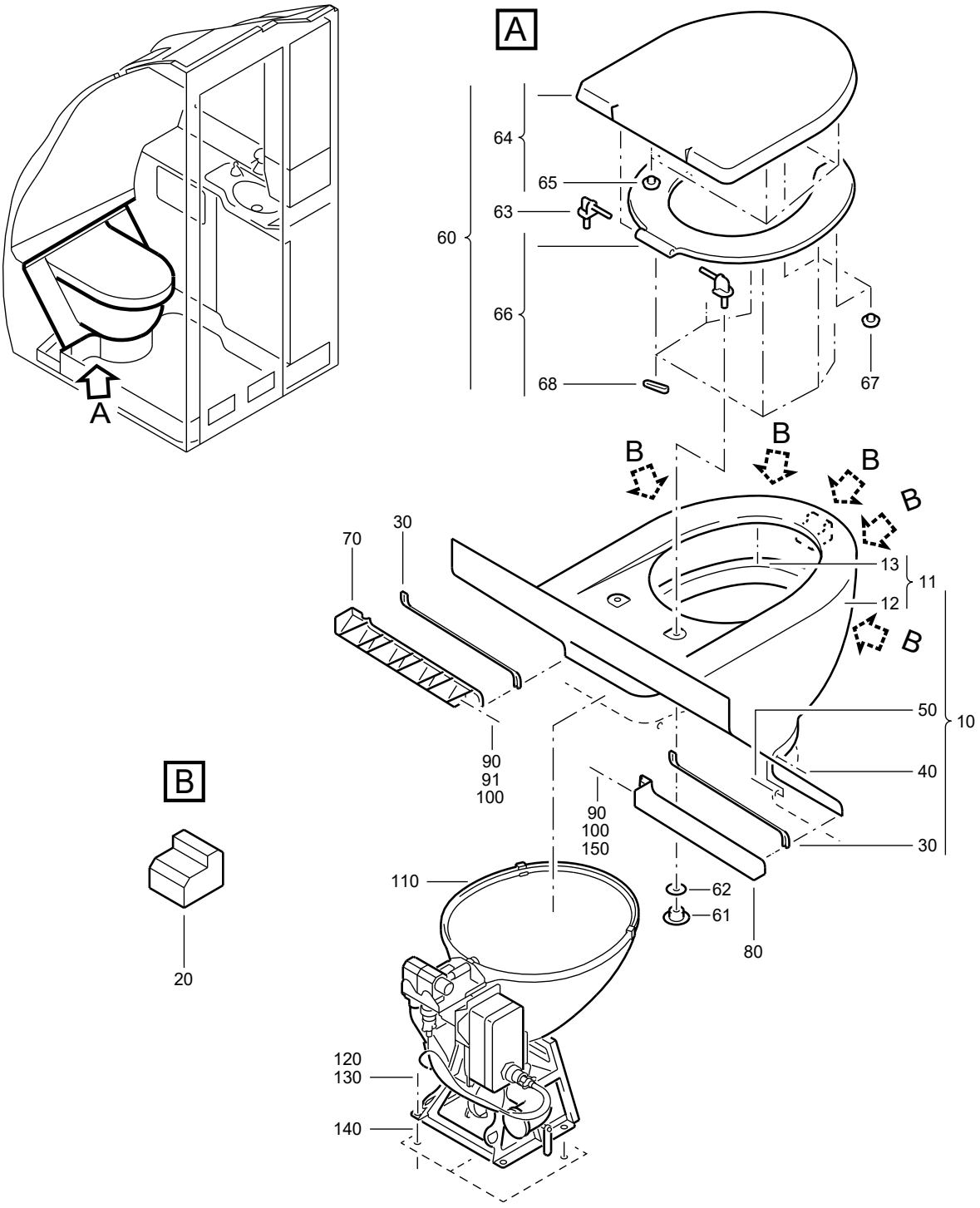

F_PL_254151_12_0_01_00

TOILET UNIT AND TOILET SHROUD
Figure 12/EN254151SHEET12001

FIG. ITEM	PART NUMBER	AIRLINE STOCK NUMBER	NOMENCLATURE 1234567		EFF CODE	UNITS PER ASSY
12						
-001A	D2549010500071		. TOILET UNIT AND TOILET SHROUD used on 080A (254151010), 080B (25415101A), 080B(25415101B) SEE 25-41-51-010 FOR NHA SEE 25-41-51-01A FOR NHA SEE 25-41-51-01B FOR NHA	NP		RF
-001B	D2549030501071		. TOILET UNIT AND TOILET SHROUD used on 080D (25415101D) SEE 25-41-51-01D FOR NHA	NP		RF
-001C	D2549020500471		. TOILET UNIT AND TOILET SHROUD used on 080C (254151010), 080A (25415101B) SEE 25-41-51-010 FOR NHA SEE 25-41-51-01B FOR NHA	NP		RF
-001D	D2549010500671		. TOILET UNIT AND TOILET SHROUD used on 080D (254151010), 080A (25415101A), 080C(25415101B) SEE 25-41-51-010 FOR NHA SEE 25-41-51-01A FOR NHA SEE 25-41-51-01B FOR NHA	NP		RF
-001E	D2549010501871		. TOILET UNIT AND TOILET SHROUD used on 080C (25415101A), 080A (25415101C) SEE 25-41-51-01A FOR NHA SEE 25-41-51-01C FOR NHA	NP		RF

- ITEM NOT ILLUSTRATED

FIG. ITEM	PART NUMBER	AIRLINE STOCK NUMBER	NOMENCLATURE 1234567		EFF CODE	UNITS PER ASSY
-001F	D2549010502471		. TOILET UNIT AND TOILET SHROUD used on 080D (25415101A), 080D (25415101B) SEE 25-41-51-01A FOR NHA SEE 25-41-51-01B FOR NHA	NP		RF
-001G	D2549030500671		. TOILET UNIT AND TOILET SHROUD used on 080B (25415101C) SEE 25-41-51-01C FOR NHA	NP		RF
-001H	D2549010504271		. TOILET UNIT AND TOILET SHROUD used on 080C (25415101C) SEE 25-41-51-01C FOR NHA	NP		RF
-001J	D2549010504471		. TOILET UNIT AND TOILET SHROUD used on 080F (25415101A), 080D (25415101C) SEE 25-41-51-01A FOR NHA SEE 25-41-51-01C FOR NHA	NP		RF
-001K	D2549020600071		. TOILET UNIT AND TOILET SHROUD used on 080F (25415101C), 080A (25415101D) SEE 25-41-51-01C FOR NHA SEE 25-41-51-01D FOR NHA	NP		RF
-001L	D2549030501271		. TOILET UNIT AND TOILET SHROUD used on 080B (25415101D) SEE 25-41-51-01D FOR NHA	NP		RF

- ITEM NOT ILLUSTRATED

FIG. ITEM	PART NUMBER	AIRLINE STOCK NUMBER	NOMENCLATURE 1234567	EFF CODE	UNITS PER ASSY
-001M	D2549030500871		. TOILET UNIT AND TOILET SHROUD NP used on 080G (25415101C), 080C (25415101D) SEE 25-41-51-01C FOR NHA SEE 25-41-51-01D FOR NHA		RF
-001N	D2549030501471		. TOILET UNIT AND TOILET SHROUD NP used on 080A (25415101E) SEE 25-41-51-01E FOR NHA		RF
010A	D2547090003400		. . SHROUD ASSY-TOILET used on 001A, 001G, 001N		001
-010B	D2547090005400		. . SHROUD ASSY-TOILET used on 001E, 001K SUPSD BY ITEM 010J		001
-010C	D2547090006000		. . SHROUD ASSY-TOILET used on 001C		001
-010D	D2547090004400		. . SHROUD ASSY-TOILET used on 001D, 001L		001
-010E	D2547090002600		. . SHROUD ASSY-TOILET used on 001E, 001K		001
-010F	D2547090000400		. . SHROUD ASSY-TOILET used on 001B, 001F, 001J, 001M		001
-010G	D2547090007400		. . SHROUD ASSY-TOILET used on 001H		001
-010H	D2547090003200		. . SHROUD ASSY-TOILET used on 001B, 001F, 001J, 001M		001
-010J	S125400465-500		. . SHROUD ASSY-TOILET used on 001E, 001K SUPSDS ITEM 010B		001

- ITEM NOT ILLUSTRATED

FIG. ITEM	PART NUMBER	AIRLINE STOCK NUMBER	NOMENCLATURE 1234567	EFF CODE	UNITS PER ASSY
011A	D2547090100000		. . . SHROUD-TOILET, COLOURLESS used on 010A, 010B, 010C, 010D, 010E, 010F, 010G, 010H, 010J		001
012A	D2547090120000		. . . . SHROUD-TOILET, COLOURLESS used on 011A		001
013A	D2547090220000		. . . . COVER-RING, COLOURLESS used on 011A		001
020A	D2547090300000		. . . SPACER used on 010A, 010B, 010C, 010D, 010E, 010F, 010G, 010H, 010J		005
030A	DAN77-2		. . . SECTION-HOSE USE AS REQUIRED DETERMINE LENGTH ON INSTALLATION used on 010A, 010B, 010C, 010D, 010E, 010F, 010G, 010H, 010J		AR
040A	MS24693C52		. . SCREW used on 001A, 001B, 001C, 001D, 001E, 001F, 001G, 001H, 001J, 001K, 001L, 001M, 001N		002
050A	NSA5067-08-2		. . NUT used on 001A, 001B, 001C, 001D, 001E, 001F, 001G, 001H, 001J, 001K, 001L, 001M, 001N		002
060A	D2547091002400		. . SEAT ASSY-TOILET used on 001A, 001E, 001K		001

- ITEM NOT ILLUSTRATED

FIG. ITEM	PART NUMBER	AIRLINE STOCK NUMBER	NOMENCLATURE 1234567	EFF CODE	UNITS PER ASSY
-060B	D2547091004800		. . SEAT ASSY-TOILET used on 001H		001
-060C	D2547091003200		. . SEAT ASSY-TOILET used on 001C		001
-060D	D2547091001400		. . SEAT ASSY-TOILET used on 001D, 001L		001
-060E	D2547091000400		. . SEAT ASSY-TOILET used on 001B, 001F, 001J, 001M		001
-060F	D2547091002600		. . SEAT ASSY-TOILET used on 001G, 001N		001
061A	SACV11595-200		. . . NUT used on 060A, 060B, 060C, 060D, 060E, 060F		002
062A	SACV11594-200		. . . GASKET used on 060A, 060B, 060C, 060D, 060E, 060F		002
063A	SACV11596-200		. . . FASTENER-UNPAINTED used on 060A, 060B, 060C, 060D, 060E, 060F		002
064A	SACV11604-000		. . . COVER-TOILET,UNPAINTED used on 060A, 060B, 060C, 060D, 060E, 060F		001
065A	SACV11592-200		. . . . BUMPER-ROUND used on 064A		004
066A	SACV11603-000		. . . SEAT ASSY-TOILET, UNPAINTED used on 060A, 060B, 060C, 060D, 060E, 060F		001
067A	SACV11592-200		. . . . BUMPER-ROUND used on 066A		002

- ITEM NOT ILLUSTRATED

FIG. ITEM	PART NUMBER	AIRLINE STOCK NUMBER	NOMENCLATURE 1234567	EFF CODE	UNITS PER ASSY
068A	SACV11593-200		. . . . BUFFER-UNPAINTED used on 066A		006
070A	A225400461-500		. . BRACKET-SUPPORT used on 001A, 001G, 001N		001
-070B	A225400461-524		. . BRACKET-SUPPORT used on 001H		001
-070C	A225400461-510		. . BRACKET-SUPPORT used on 001C		001
-070D	A225400461-502		. . BRACKET-SUPPORT used on 001D, 001L		001
-070E	A225400461-514		. . BRACKET-SUPPORT used on 001E, 001K		001
-070F	A225400461-506		. . BRACKET-SUPPORT used on 001B, 001F, 001J, 001M		001
080A	A225400461-501		. . BRACKET-SUPPORT used on 001A, 001G, 001N		001
-080B	A225400461-525		. . BRACKET-SUPPORT used on 001H		001
-080C	A225400461-511		. . BRACKET-SUPPORT used on 001C		001
-080D	A225400461-503		. . BRACKET-SUPPORT used on 001D, 001L		001
-080E	A225400461-515		. . BRACKET-SUPPORT used on 001E, 001K		001
-080F	A225400461-507		. . BRACKET-SUPPORT used on 001B, 001F, 001J, 001M		001

- ITEM NOT ILLUSTRATED

FIG. ITEM	PART NUMBER	AIRLINE STOCK NUMBER	NOMENCLATURE 1234567	EFF CODE	UNITS PER ASSY
090A	NAS1096-2-5		. . SCREW BUY PN NAS1801-08-5 used on 001B, 001C, 001D, 001E, 001F, 001H, 001J, 001K, 001L, 001M, 001N		010
091A	NAS1096-2-5		. . SCREW BUY PN NAS1801-08-5 used on 001A, 001G		005
100A	ASNA0113-40ADL		. . WASHER used on 001A, 001B, 001C, 001D, 001E, 001F, 001G, 001H, 001J, 001K, 001L, 001M, 001N		010
110A	14320-002-1		. . TOILET ASSY used on 001A, 001C, 001D, 001E, 001F, 001G, 001H, 001J		001
-110B	14320-002B1		. . TOILET ASSY used on 001A, 001C, 001D, 001E, 001F, 001G, 001H, 001J, 001L, 001M, 001N		001
-110D	14320-002C1		. . TOILET ASSY POST SB 38-1052 used on 001B, 001K, 001L, 001M, 001N		001
120A	NAS564C19		. . BOLT used on 001A, 001B, 001C, 001D, 001E, 001F, 001G, 001H, 001J, 001K, 001L, 001M, 001N		004
130A	MS35338-158		. . WASHER-LOCK used on 001A, 001B, 001C, 001D, 001E, 001F, 001G, 001H, 001J, 001K, 001L, 001M, 001N		004

- ITEM NOT ILLUSTRATED

FIG. ITEM	PART NUMBER	AIRLINE STOCK NUMBER	NOMENCLATURE 1234567	EFF CODE	UNITS PER ASSY
140A	NSA5307-5C		. . WASHER used on 001A, 001B, 001C, 001D, 001E, 001F, 001G, 001H, 001J, 001K, 001L, 001M, 001N		004
150A	NAS1096-2-4		. . SCREW BUY PN NAS1801-08-4 used on 001A, 001G		005

- ITEM NOT ILLUSTRATED

THIS PAGE IS INTENTIONALLY LEFT BLANK

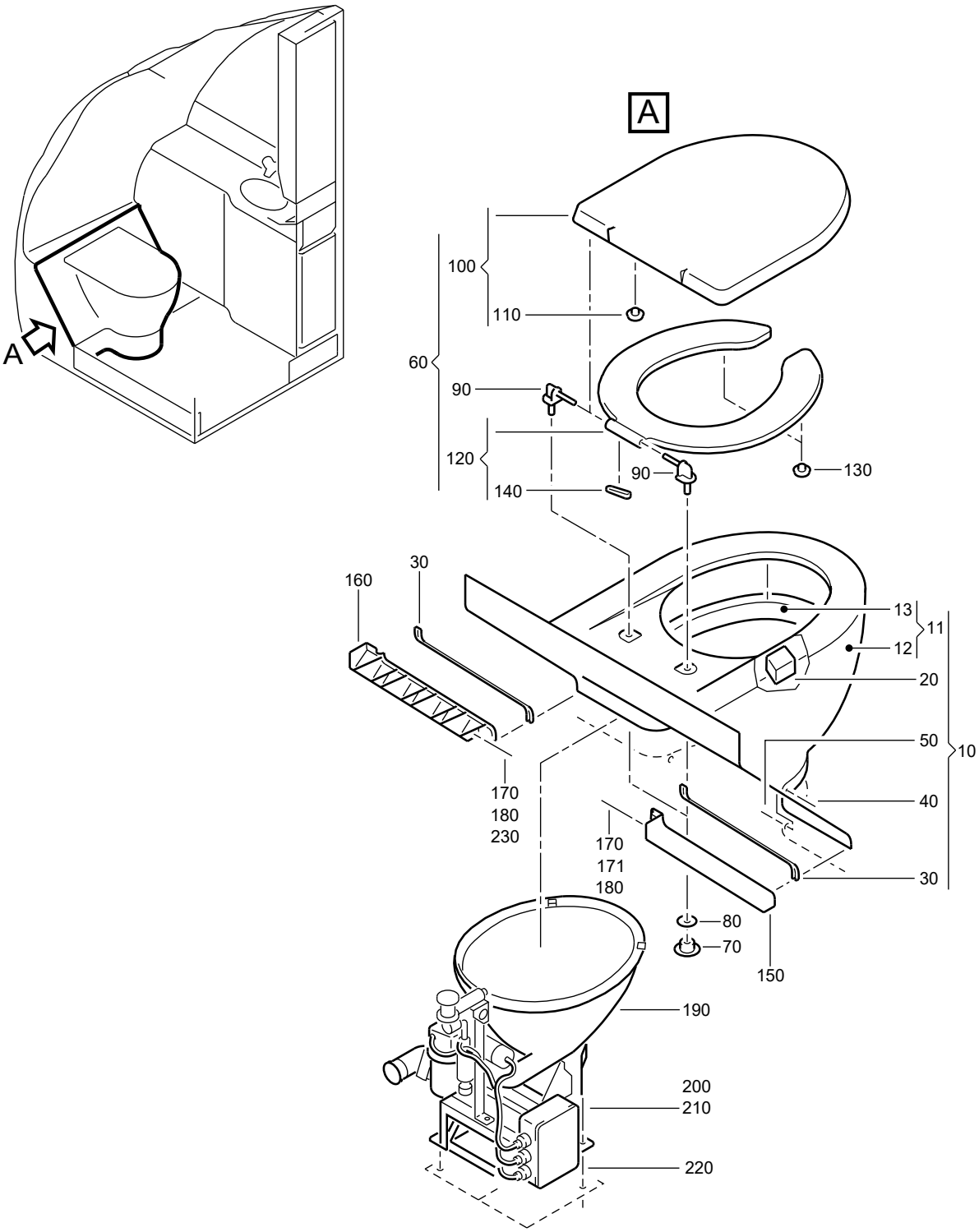

F_PL_254151_12_A_01_01

TOILET UNIT AND TOILET SHROUD
Figure 12A/EN254151SHEET12A01

FIG. ITEM	PART NUMBER	AIRLINE STOCK NUMBER	NOMENCLATURE 1234567	EFF CODE	UNITS PER ASSY
12A					
-001A	D2549020600471		. TOILET UNIT AND TOILET SHROUD NP used on 080F (254151410) SEE 25-41-51-410 FOR NHA		RF
-001B	D2549020504871		. TOILET UNIT AND TOILET SHROUD NP used on 080C (25415101E) SEE 25-41-51-01E FOR NHA		RF
-001C	D2549010506071		. TOILET UNIT AND TOILET SHROUD NP used on 080E (25415101E) SEE 25-41-51-01E FOR NHA		RF
-001D	D2549010506471		. TOILET UNIT AND TOILET SHROUD NP used on 080F (25415101E), 080B (25415101F) SEE 25-41-51-01E FOR NHA SEE 25-41-51-01F FOR NHA		RF
-001E	D2549020601271		. TOILET UNIT AND TOILET SHROUD NP used on 080G (25415101E), 080G (25415101L) SEE 25-41-51-01E FOR NHA SEE 25-41-51-01L FOR NHA		RF

- ITEM NOT ILLUSTRATED

FIG. ITEM	PART NUMBER	AIRLINE STOCK NUMBER	NOMENCLATURE 1234567		EFF CODE	UNITS PER ASSY
-001F	D2549020601471		. TOILET UNIT AND TOILET SHROUD used on 080H (25415101E), 080A (25415101F), 080E (25415101G), 080C (25415101H), 080H (25415101K), 080F(25415101M) SEE 25-41-51-01E FOR NHA SEE 25-41-51-01F FOR NHA SEE 25-41-51-01G FOR NHA SEE 25-41-51-01H FOR NHA SEE 25-41-51-01K FOR NHA SEE 25-41-51-01M FOR NHA	NP		RF
-001G	D2549010507471		. TOILET UNIT AND TOILET SHROUD used on 080H (25415101A), 080H (25415101C), 080F (25415101D), 080J (25415101E), 080D (25415101F), 080D (25415101G), 080A (25415101H), 080K (25415101K), 080F(25415101L), 080E (25415101N), 080B (25415141B) SEE 25-41-51-01A FOR NHA SEE 25-41-51-01C FOR NHA SEE 25-41-51-01D FOR NHA SEE 25-41-51-01E FOR NHA SEE 25-41-51-01F FOR NHA SEE 25-41-51-01G FOR NHA SEE 25-41-51-01H FOR NHA SEE 25-41-51-01K FOR NHA SEE 25-41-51-01L FOR NHA SEE 25-41-51-01N FOR NHA SEE 25-41-51-41B FOR NHA	NP		RF

- ITEM NOT ILLUSTRATED

FIG. ITEM	PART NUMBER	AIRLINE STOCK NUMBER	NOMENCLATURE 1234567		EFF CODE	UNITS PER ASSY
-001H	D2549010507071		. TOILET UNIT AND TOILET SHROUD used on 080E (25415101C), 080D (25415101E), 080E (25415101F), 080F (25415101G), 080B (25415101H), 080B (25415101J) SEE 25-41-51-01C FOR NHA SEE 25-41-51-01E FOR NHA SEE 25-41-51-01F FOR NHA SEE 25-41-51-01G FOR NHA SEE 25-41-51-01H FOR NHA SEE 25-41-51-01J FOR NHA	NP		RF
-001J	D2549030502471		. TOILET UNIT AND TOILET SHROUD used on 080E (25415101D), 080C (25415101F), 080C (25415101G) SEE 25-41-51-01D FOR NHA SEE 25-41-51-01F FOR NHA SEE 25-41-51-01G FOR NHA	NP		RF
-001K	D2549010507671		. TOILET UNIT AND TOILET SHROUD used on 080K (25415101E) SEE 25-41-51-01E FOR NHA	NP		RF
-001L	D2549010508071		. TOILET UNIT AND TOILET SHROUD used on 080A (25415101G) SEE 25-41-51-01G FOR NHA	NP		RF
-001M	D2549030503071		. TOILET UNIT AND TOILET SHROUD used on 080B (25415101E) SEE 25-41-51-01E FOR NHA	NP		RF

- ITEM NOT ILLUSTRATED

FIG. ITEM	PART NUMBER	AIRLINE STOCK NUMBER	NOMENCLATURE 1234567	EFF CODE	UNITS PER ASSY
-001N	D2549020500071		. TOILET UNIT AND TOILET SHROUD NP used on 080B (254151010), 080E (25415101A), 080E(25415101B) SEE 25-41-51-010 FOR NHA SEE 25-41-51-01A FOR NHA SEE 25-41-51-01B FOR NHA		RF
010A	D2547090005200		. . SHROUD ASSY-TOILET used on 001A		001
-010B	D2547090003000		. . SHROUD ASSY-TOILET used on 001B, 001J, 001N		001
-010C	D2547090003400		. . SHROUD ASSY-TOILET used on 001C, 001K, 001M		001
-010D	D2547090002600		. . SHROUD ASSY-TOILET used on 001D		001
-010E	D2547090008000		. . SHROUD ASSY-TOILET used on 001E		001
010F	D2547090006200		. . SHROUD ASSY-TOILET used on 001F		001
-010G	D2547090003200		. . SHROUD ASSY-TOILET used on 001G		001
-010H	D2547090004400		. . SHROUD ASSY-TOILET used on 001H		001
-010J	D2547090008400		. . SHROUD ASSY-TOILET used on 001L		001
011A	D2547090100000		. . . SHROUD-TOILET, COLOURLESS used on 010A, 010B, 010C, 010D, 010E, 010F, 010G, 010H, 010J		001

- ITEM NOT ILLUSTRATED

FIG. ITEM	PART NUMBER	AIRLINE STOCK NUMBER	NOMENCLATURE 1234567	EFF CODE	UNITS PER ASSY
012A	D2547090120000		. . . . SHROUD-TOILET, COLOURLESS used on 011A		001
013A	D2547090220000		. . . . COVER-RING, COLOURLESS used on 011A		001
020A	D2547090300000		. . . SPACER used on 010A, 010B, 010C, 010D, 010E, 010F, 010G, 010H, 010J		005
030A	DAN77-2		. . . SECTION-HOSE USE AS REQUIRED REQUIRED LENGTH 900 MM used on 010A, 010B, 010C, 010D, 010E, 010F, 010G, 010H, 010J		AR
040A	MS24693C52		. . SCREW used on 001A, 001B, 001C, 001D, 001E, 001F, 001G, 001H, 001J, 001K, 001L, 001M, 001N		002
050A	NSA5067-08-2		. . NUT used on 001A, 001B, 001C, 001D, 001E, 001F, 001G, 001H, 001J, 001K, 001L, 001M, 001N		002
060A	D2547091002200		. . SEAT ASSY-TOILET used on 001A		001
-060B	D2547091000200		. . SEAT ASSY-TOILET used on 001B, 001J, 001N		001
-060C	D2547091002400		. . SEAT ASSY-TOILET used on 001C, 001D, 001K		001
-060D	D2547091003400		. . SEAT ASSY-TOILET used on 001F		001

- ITEM NOT ILLUSTRATED

FIG. ITEM	PART NUMBER	AIRLINE STOCK NUMBER	NOMENCLATURE 1234567	EFF CODE	UNITS PER ASSY
-060E	D2547091005400		. . SEAT ASSY-TOILET used on 001E		001
-060F	D2547091000400		. . SEAT ASSY-TOILET used on 001G		001
-060G	D2547091001400		. . SEAT ASSY-TOILET used on 001H		001
-060H	D2547091006000		. . SEAT ASSY-TOILET used on 001L		001
-060J	D2547091002600		. . SEAT ASSY-TOILET used on 001M		001
070A	SACV11595-200		. . . NUT used on 060A, 060B, 060C, 060D, 060E, 060F, 060G, 060H, 060J		002
080A	SACV11594-200		. . . GASKET used on 060A, 060B, 060C, 060D, 060E, 060F, 060G, 060H, 060J		002
090A	SACV11596-200		. . . FASTENER-UNPAINTED used on 060A, 060B, 060C, 060D, 060E, 060F, 060G, 060H, 060J		002
100A	SACV11604-000		. . . COVER-TOILET,UNPAINTED used on 060A, 060B, 060C, 060D, 060E, 060F, 060G, 060H, 060J		001
110A	SACV11592-200		. . . . BUMPER-ROUND used on 100A		004

- ITEM NOT ILLUSTRATED

FIG. ITEM	PART NUMBER	AIRLINE STOCK NUMBER	NOMENCLATURE 1234567	EFF CODE	UNITS PER ASSY
120A	SACV11603-000		. . . SEAT ASSY-TOILET, UNPAINTED used on 060A, 060B, 060C, 060D, 060E, 060F, 060G, 060H, 060J		001
130A	SACV11592-200		. . . . BUMPER-ROUND used on 120A		002
140A	SACV11593-200		. . . . BUFFER-UNPAINTED used on 120A		006
150A	A225400461-518		. . BRACKET-SUPPORT used on 001A		001
-150B	A225400461-504		. . BRACKET-SUPPORT used on 001B, 001J, 001N		001
-150C	A225400461-500		. . BRACKET-SUPPORT used on 001C, 001K, 001M		001
-150D	A225400461-514		. . BRACKET-SUPPORT used on 001D		001
-150E	A225400461-530		. . BRACKET-SUPPORT used on 001E		001
-150F	A225400461-508		. . BRACKET-SUPPORT used on 001F		001
-150G	A225400461-506		. . BRACKET-SUPPORT used on 001G		001
-150H	A225400461-502		. . BRACKET-SUPPORT used on 001H		001
-150J	A225400461-536		. . BRACKET-SUPPORT used on 001L		001
160A	A225400461-519		. . BRACKET-SUPPORT used on 001A		001

- ITEM NOT ILLUSTRATED

FIG. ITEM	PART NUMBER	AIRLINE STOCK NUMBER	NOMENCLATURE 1234567	EFF CODE	UNITS PER ASSY
-160B	A225400461-505		. . BRACKET-SUPPORT used on 001B, 001J, 001N		001
-160C	A225400461-501		. . BRACKET-SUPPORT used on 001C, 001K, 001M		001
-160D	A225400461-515		. . BRACKET-SUPPORT used on 001D		001
-160E	A225400461-531		. . BRACKET-SUPPORT used on 001E		001
-160F	A225400461-509		. . BRACKET-SUPPORT used on 001F		001
-160G	A225400461-507		. . BRACKET-SUPPORT used on 001G		001
-160H	A225400461-503		. . BRACKET-SUPPORT used on 001H		001
-160J	A225400461-537		. . BRACKET-SUPPORT used on 001L		001
170A	NAS1801-08-5		. . SCREW POST SB 25-1640 used on 001A, 001D, 001E, 001F, 001G, 001H, 001J, 001L, 001N		010
171A	NAS1096-2-5		. . SCREW BUY PN NAS1801-08-5 used on 001B, 001C, 001K, 001M		005
180A	ASNA0113-40ADL		. . WASHER used on 001A, 001B, 001C, 001D, 001E, 001F, 001G, 001H, 001J, 001K, 001L, 001M, 001N		010
190A	14320-002B1		. . TOILET ASSY used on 001A, 001C		001

- ITEM NOT ILLUSTRATED

FIG. ITEM	PART NUMBER	AIRLINE STOCK NUMBER	NOMENCLATURE 1234567	EFF CODE	UNITS PER ASSY
-190B	14320-002C1		. . TOILET ASSY POST SB 38-1052 used on 001A, 001B, 001C, 001D, 001E, 001F, 001G, 001H, 001J, 001K, 001L, 001M, 001N		001
200A	NAS564C19		. . BOLT used on 001A, 001B, 001C, 001D, 001E, 001F, 001G, 001H, 001J, 001K, 001L, 001M, 001N		004
210A	MS35338-158		. . WASHER-LOCK used on 001A, 001B, 001C, 001D, 001E, 001F, 001G, 001H, 001J, 001K, 001L, 001M, 001N		004
220A	NSA5307-5C		. . WASHER used on 001A, 001B, 001C, 001D, 001E, 001F, 001G, 001H, 001J, 001K, 001L, 001M, 001N		004
230A	NAS1096-2-4		. . SCREW BUY PN NAS1801-08-4 used on 001B, 001C, 001K, 001M		005

- ITEM NOT ILLUSTRATED

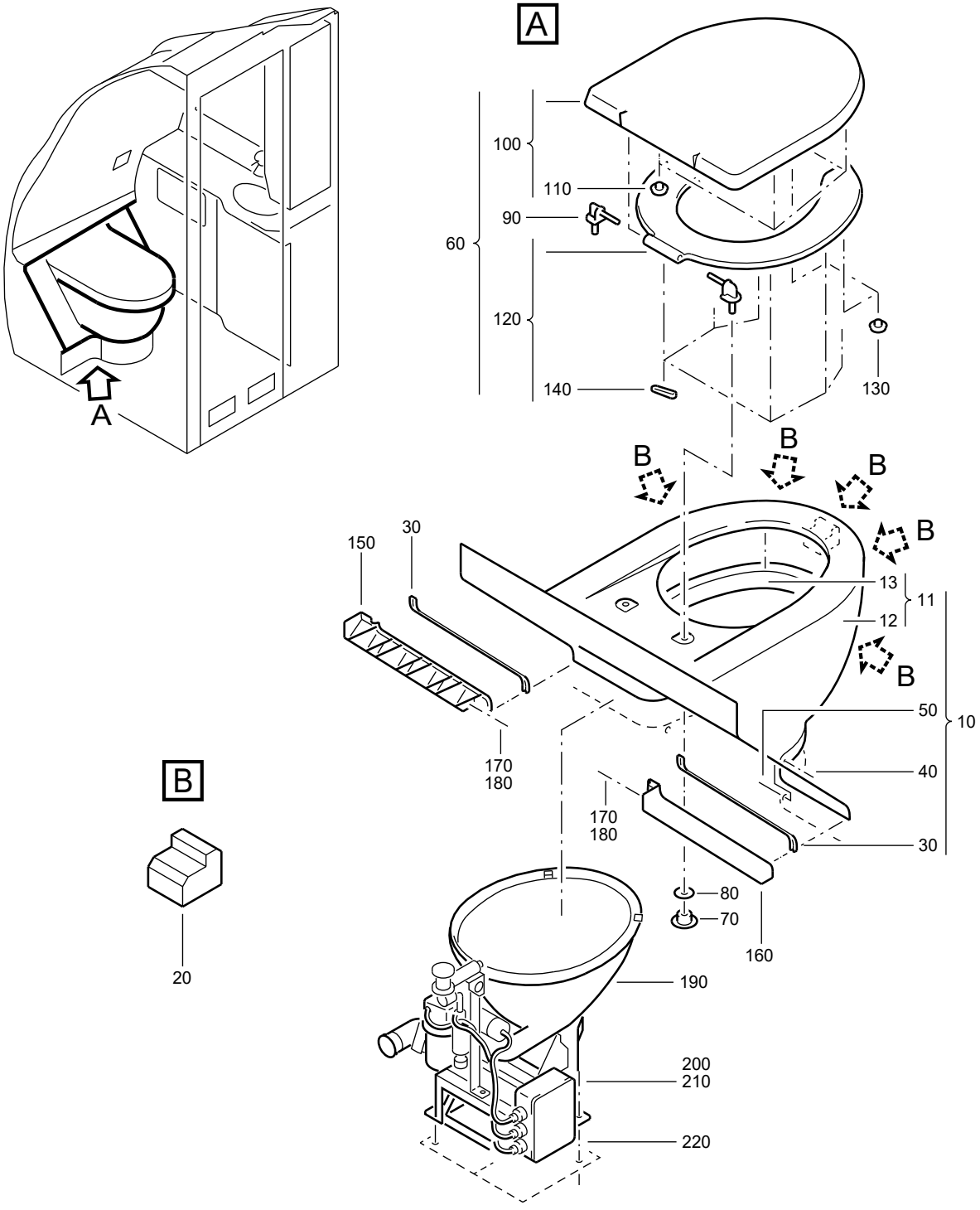

F_PL_254151_12_B_01_00

TOILET UNIT AND TOILET SHROUD
Figure 12B/EN254151SHEET12B01

FIG. ITEM	PART NUMBER	AIRLINE STOCK NUMBER	NOMENCLATURE 1234567		EFF CODE	UNITS PER ASSY
12B						
-001A	D2549020602671		. TOILET UNIT AND TOILET SHROUD used on 080B (25415101G), 080D (25415101H) SEE 25-41-51-01G FOR NHA SEE 25-41-51-01H FOR NHA	NP		RF
-001B	D2549020603871		. TOILET UNIT AND TOILET SHROUD used on 080G (25415101G) SEE 25-41-51-01G FOR NHA	NP		RF
-001C	D2549010501071		. TOILET UNIT AND TOILET SHROUD used on 080E (254151010), 080G (25415101A), 080F(25415101B), 080J (25415101K), 080D (25415141T) SEE 25-41-51-010 FOR NHA SEE 25-41-51-01A FOR NHA SEE 25-41-51-01B FOR NHA SEE 25-41-51-01K FOR NHA SEE 25-41-51-41T FOR NHA	NP		RF
-001D	D2549020503671		. TOILET UNIT AND TOILET SHROUD used on 080J (25415101C) SEE 25-41-51-01C FOR NHA	NP		RF
-001E	D2549010503271		. TOILET UNIT AND TOILET SHROUD used on 080G (25415101B) SEE 25-41-51-01B FOR NHA	NP		RF

- ITEM NOT ILLUSTRATED

FIG. ITEM	PART NUMBER	AIRLINE STOCK NUMBER	NOMENCLATURE 1234567	EFF CODE	UNITS PER ASSY
-001F	D2549020500271		. TOILET UNIT AND TOILET SHROUD NP used on 080F (254151010), 080H (25415101B), 080E(25415141T) SEE 25-41-51-010 FOR NHA SEE 25-41-51-01B FOR NHA SEE 25-41-51-41T FOR NHA		RF
010A	D2547090007200		. . SHROUD ASSY-TOILET used on 001A		001
-010B	D2547090005400		. . SHROUD ASSY-TOILET used on 001B SUPSD BY ITEM 010G		001
-010C	D2547090004400		. . SHROUD ASSY-TOILET used on 001C		001
-010D	D2547090003200		. . SHROUD ASSY-TOILET used on 001D, 001E		001
-010E	D2547090000400		. . SHROUD ASSY-TOILET used on 001D, 001E		001
-010F	D2547090006000		. . SHROUD ASSY-TOILET used on 001F		001
-010G	S125400465-500		. . SHROUD ASSY-TOILET used on 001B SUPSDS ITEM 010B		001
011A	D2547090100000		. . . SHROUD-TOILET, COLOURLESS used on 010A, 010B, 010C, 010D, 010E, 010F, 010G		001
012A	D2547090120000		. . . . SHROUD-TOILET, COLOURLESS used on 011A		001

- ITEM NOT ILLUSTRATED

FIG. ITEM	PART NUMBER	AIRLINE STOCK NUMBER	NOMENCLATURE 1234567	EFF CODE	UNITS PER ASSY
013A	D2547090220000		. . . . COVER-RING, COLOURLESS used on 011A		001
020A	D2547090300000		. . . SPACER used on 010A, 010B, 010C, 010D, 010E, 010F, 010G		005
030A	DAN77-2		. . . SECTION-HOSE USE AS REQUIRED REQUIRED LENGTH 900 MM used on 010A, 010B, 010C, 010D, 010E, 010F, 010G		AR
040A	MS24693C52		. . SCREW used on 001A, 001B, 001C, 001D, 001E, 001F		002
050A	NSA5067-08-2		. . NUT used on 001A, 001B, 001C, 001D, 001E, 001F		002
060A	D2547091004600		. . SEAT ASSY-TOILET used on 001A		001
-060B	D2547091002400		. . SEAT ASSY-TOILET used on 001B		001
-060C	D2547091001400		. . SEAT ASSY-TOILET used on 001C		001
-060D	D2547091000400		. . SEAT ASSY-TOILET used on 001D, 001E		001
-060E	D2547091003200		. . SEAT ASSY-TOILET used on 001F		001
070A	SACV11595-200		. . . NUT used on 060A, 060B, 060C, 060D, 060E		002

- ITEM NOT ILLUSTRATED

FIG. ITEM	PART NUMBER	AIRLINE STOCK NUMBER	NOMENCLATURE 1234567	EFF CODE	UNITS PER ASSY
080A	SACV11594-200		. . . GASKET used on 060A, 060B, 060C, 060D, 060E		002
090A	SACV11596-200		. . . FASTENER-UNPAINTED used on 060A, 060B, 060C, 060D, 060E		002
100A	SACV11604-000		. . . COVER-TOILET,UNPAINTED used on 060A, 060B, 060C, 060D, 060E		001
110A	SACV11592-200		. . . . BUMPER-ROUND used on 100A		004
120A	SACV11603-000		. . . SEAT ASSY-TOILET, UNPAINTED used on 060A, 060B, 060C, 060D, 060E		001
130A	SACV11592-200		. . . . BUMPER-ROUND used on 120A		002
140A	SACV11593-200		. . . . BUFFER-UNPAINTED used on 120A		006
150A	A225400461-522		. . BRACKET-SUPPORT used on 001A		001
-150B	A225400461-514		. . BRACKET-SUPPORT used on 001B		001
-150C	A225400461-502		. . BRACKET-SUPPORT used on 001C		001
-150D	A225400461-506		. . BRACKET-SUPPORT used on 001D, 001E		001
-150E	A225400461-510		. . BRACKET-SUPPORT used on 001F		001

- ITEM NOT ILLUSTRATED

FIG. ITEM	PART NUMBER	AIRLINE STOCK NUMBER	NOMENCLATURE 1234567	EFF CODE	UNITS PER ASSY
160A	A225400461-523		. . BRACKET-SUPPORT used on 001A		001
-160B	A225400461-515		. . BRACKET-SUPPORT used on 001B		001
-160C	A225400461-503		. . BRACKET-SUPPORT used on 001C		001
-160D	A225400461-507		. . BRACKET-SUPPORT used on 001D, 001E		001
-160E	A225400461-511		. . BRACKET-SUPPORT used on 001F		001
170A	NAS1096-2-5		. . SCREW BUY PN NAS1801-08-5 used on 001A, 001B, 001C, 001D, 001E, 001F		010
180A	ASNA0113-40ADL		. . WASHER used on 001A, 001B, 001C, 001D, 001E, 001F		010
190A	14320-002C1		. . TOILET ASSY used on 001A, 001B, 001C, 001D, 001E, 001F		001
200A	NAS564C19		. . BOLT used on 001A, 001B, 001C, 001D, 001E, 001F		004
210A	MS35338-158		. . WASHER-LOCK used on 001A, 001B, 001C, 001D, 001E, 001F		004
220A	NSA5307-5C		. . WASHER used on 001A, 001B, 001C, 001D, 001E, 001F		004

- ITEM NOT ILLUSTRATED

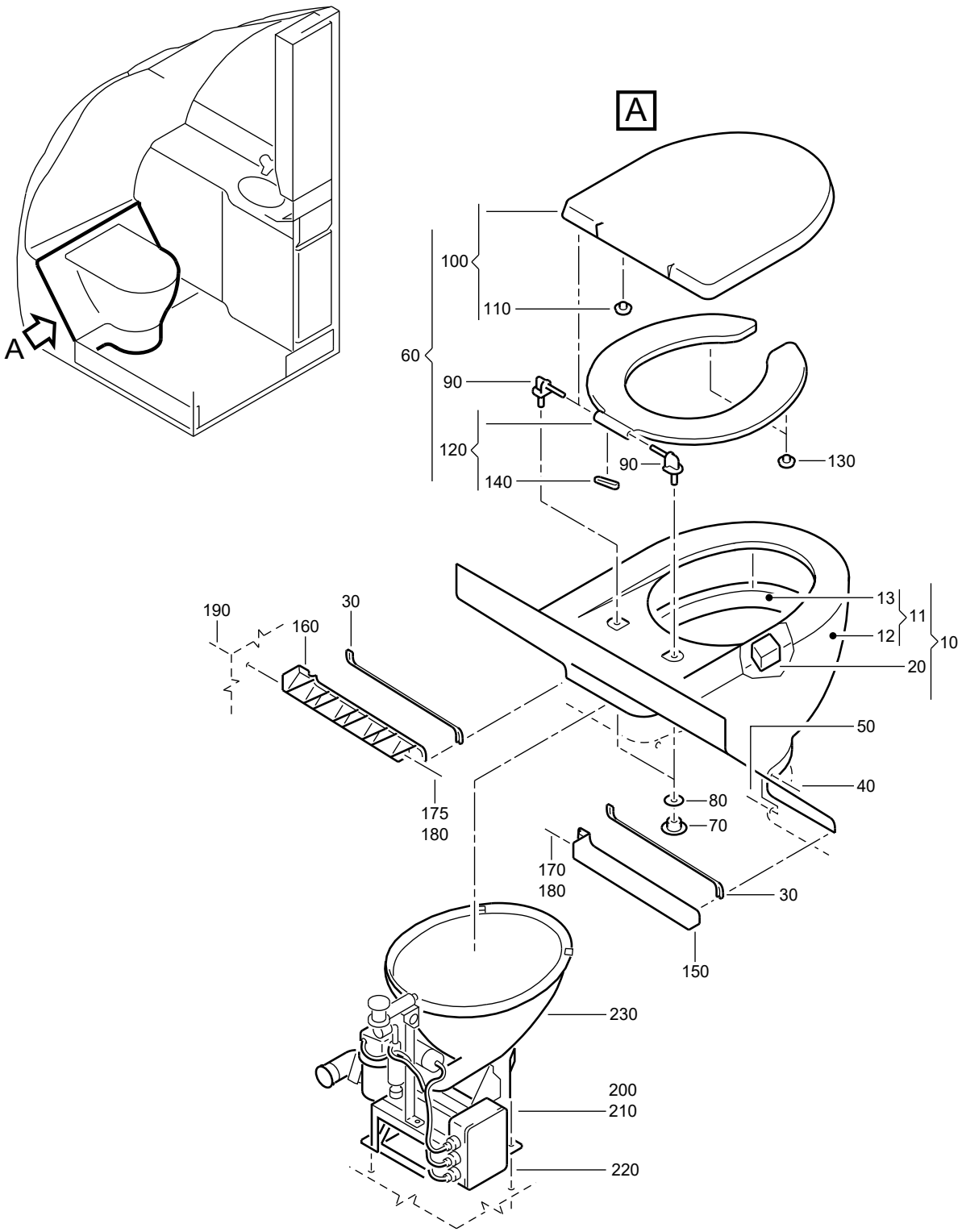

F_PL_254151_12_C_01_01

TOILET UNIT AND TOILET SHROUD
Figure 12C/EN254151SHEET12C01

FIG. ITEM	PART NUMBER	AIRLINE STOCK NUMBER	NOMENCLATURE 1234567	EFF CODE	UNITS PER ASSY
12C -001A	D2549030506071		. TOILET UNIT AND TOILET SHROUD NP used on 080A (25415101Q), 080D (25415101S), 080B (25415101V), 080B (25415101W), 080D (25415101Z), 080C(25415141B), 080D (25415141D), 080B (25415141G) SEE 25-41-51-01Q FOR NHA SEE 25-41-51-01S FOR NHA SEE 25-41-51-01V FOR NHA SEE 25-41-51-01W FOR NHA SEE 25-41-51-01Z FOR NHA SEE 25-41-51-41B FOR NHA SEE 25-41-51-41D FOR NHA SEE 25-41-51-41G FOR NHA		RF

- ITEM NOT ILLUSTRATED

FIG. ITEM	PART NUMBER	AIRLINE STOCK NUMBER	NOMENCLATURE 1234567	EFF CODE	UNITS PER ASSY
-001B	D2549020604271		. TOILET UNIT AND TOILET SHROUD NP PRE VSB A2-254-25-130 used on 080A (25415101J), 080C (25415101K), 080D(25415101L), 080A (25415101M), 080B (25415101N), 080D(25415101P), 080D (25415101Q), 080B (25415101S), 080A(25415101T), 080A (25415101U), 080A (25415101V), 080A(25415101W), 080E (25415101X), 080A (25415101Y), 080C(25415101Z), 080B (254151410), 080A (25415141A), 080A(25415141B), 080B (25415141C), 080F (25415141D), 080B(25415141F), 080C (25415141G), 080B (25415141H), 080A(25415141J), 080C (25415141K), 080B (25415141L) SEE 25-41-51-01J FOR NHA SEE 25-41-51-01K FOR NHA SEE 25-41-51-01L FOR NHA SEE 25-41-51-01M FOR NHA SEE 25-41-51-01N FOR NHA SEE 25-41-51-01P FOR NHA SEE 25-41-51-01Q FOR NHA SEE 25-41-51-01S FOR NHA SEE 25-41-51-01T FOR NHA SEE 25-41-51-01U FOR NHA SEE 25-41-51-01V FOR NHA SEE 25-41-51-01W FOR NHA SEE 25-41-51-01X FOR NHA SEE 25-41-51-01Y FOR NHA SEE 25-41-51-01Z FOR NHA SEE 25-41-51-410 FOR NHA SEE 25-41-51-41A FOR NHA SEE 25-41-51-41B FOR NHA SEE 25-41-51-41C FOR NHA		RF

- ITEM NOT ILLUSTRATED

FIG. ITEM	PART NUMBER	AIRLINE STOCK NUMBER	NOMENCLATURE 1234567	EFF CODE	UNITS PER ASSY
			SEE 25-41-51-41D FOR NHA SEE 25-41-51-41F FOR NHA SEE 25-41-51-41G FOR NHA SEE 25-41-51-41H FOR NHA SEE 25-41-51-41J FOR NHA SEE 25-41-51-41K FOR NHA SEE 25-41-51-41L FOR NHA		
-001C	D2549010511471		. TOILET UNIT AND TOILET SHROUD NP used on 080F (25415101K), 080E (25415101L), 080C(25415101S) SEE 25-41-51-01K FOR NHA SEE 25-41-51-01L FOR NHA SEE 25-41-51-01S FOR NHA		RF
-001D	D2549010510071		. TOILET UNIT AND TOILET SHROUD NP used on 080E (25415101K) SEE 25-41-51-01K FOR NHA		RF

- ITEM NOT ILLUSTRATED

FIG. ITEM	PART NUMBER	AIRLINE STOCK NUMBER	NOMENCLATURE 1234567	EFF CODE	UNITS PER ASSY
-001E	D2549010510271		. TOILET UNIT AND TOILET SHROUD NP used on 080D (25415101J), 080A (25415101K), 080A(25415101L), 080C (25415101P), 080C (25415101Q), 080B(25415101R), 080F (25415101W), 080A (25415101X), 080C(25415101Y), 080A (25415141C), 080H (25415141D), 080A(25415141G) SEE 25-41-51-01J FOR NHA SEE 25-41-51-01K FOR NHA SEE 25-41-51-01L FOR NHA SEE 25-41-51-01P FOR NHA SEE 25-41-51-01Q FOR NHA SEE 25-41-51-01R FOR NHA SEE 25-41-51-01W FOR NHA SEE 25-41-51-01X FOR NHA SEE 25-41-51-01Y FOR NHA SEE 25-41-51-41C FOR NHA SEE 25-41-51-41D FOR NHA SEE 25-41-51-41G FOR NHA		RF

- ITEM NOT ILLUSTRATED

FIG. ITEM	PART NUMBER	AIRLINE STOCK NUMBER	NOMENCLATURE 1234567	EFF CODE	UNITS PER ASSY
-001F	D2549020607671		. TOILET UNIT AND TOILET SHROUD NP used on 080B (25415101L), 080C (25415101M), 080E(25415101P), 080B (25415101T), 080C (25415101W), 080F(25415101X), 080A (25415101Z), 080A (254151410), 080C(25415141A), 080E (25415141C), 080B (25415141D), 080C(25415141F), 080C (25415141J), 080A (25415141K), 080A(25415141L), 080A (25415141M) SEE 25-41-51-01L FOR NHA SEE 25-41-51-01M FOR NHA SEE 25-41-51-01P FOR NHA SEE 25-41-51-01T FOR NHA SEE 25-41-51-01W FOR NHA SEE 25-41-51-01X FOR NHA SEE 25-41-51-01Z FOR NHA SEE 25-41-51-410 FOR NHA SEE 25-41-51-41A FOR NHA SEE 25-41-51-41C FOR NHA SEE 25-41-51-41D FOR NHA SEE 25-41-51-41F FOR NHA SEE 25-41-51-41J FOR NHA SEE 25-41-51-41K FOR NHA SEE 25-41-51-41L FOR NHA SEE 25-41-51-41M FOR NHA		RF

- ITEM NOT ILLUSTRATED

FIG. ITEM	PART NUMBER	AIRLINE STOCK NUMBER	NOMENCLATURE 1234567	EFF CODE	UNITS PER ASSY
-001G	D2549030506271		. TOILET UNIT AND TOILET SHROUD NP used on 080C (25415101L), 080B (25415101M), 080G (25415101Q), 080B (25415101U), 080B (25415101X), 080B(25415101Z), 080C (25415141D), 080B (25415141K) SEE 25-41-51-01L FOR NHA SEE 25-41-51-01M FOR NHA SEE 25-41-51-01Q FOR NHA SEE 25-41-51-01U FOR NHA SEE 25-41-51-01X FOR NHA SEE 25-41-51-01Z FOR NHA SEE 25-41-51-41D FOR NHA SEE 25-41-51-41K FOR NHA		RF

- ITEM NOT ILLUSTRATED

FIG. ITEM	PART NUMBER	AIRLINE STOCK NUMBER	NOMENCLATURE 1234567		EFF CODE	UNITS PER ASSY
-001H	D2549020506271		. TOILET UNIT AND TOILET SHROUD used on 080C (25415101J), 080G (25415101K), 080D(25415101M), 080A (25415101P), 080B (25415101Q), 080C(25415101T), 080C (25415101V), 080E (25415101W), 080B(25415101Y), 080E (25415141B), 080G (25415141D), 080E(25415141G), 080D (25415141H), 080D (25415141K) SEE 25-41-51-01J FOR NHA SEE 25-41-51-01K FOR NHA SEE 25-41-51-01M FOR NHA SEE 25-41-51-01P FOR NHA SEE 25-41-51-01Q FOR NHA SEE 25-41-51-01T FOR NHA SEE 25-41-51-01V FOR NHA SEE 25-41-51-01W FOR NHA SEE 25-41-51-01Y FOR NHA SEE 25-41-51-41B FOR NHA SEE 25-41-51-41D FOR NHA SEE 25-41-51-41G FOR NHA SEE 25-41-51-41H FOR NHA SEE 25-41-51-41K FOR NHA	NP		RF
-001J	D2549010510471		. TOILET UNIT AND TOILET SHROUD used on 080E (25415101J), 080D (25415101T), 080C(254151410), 080D (25415141A), 080C (25415141H) SEE 25-41-51-01J FOR NHA SEE 25-41-51-01T FOR NHA SEE 25-41-51-410 FOR NHA SEE 25-41-51-41A FOR NHA SEE 25-41-51-41H FOR NHA	NP		RF

- ITEM NOT ILLUSTRATED

FIG. ITEM	PART NUMBER	AIRLINE STOCK NUMBER	NOMENCLATURE 1234567		EFF CODE	UNITS PER ASSY
-001K	D2549030504671		. TOILET UNIT AND TOILET SHROUD used on 080B (25415101K) SEE 25-41-51-01K FOR NHA	NP		RF
-001L	D2549020608671		. TOILET UNIT AND TOILET SHROUD used on 080D (25415101K), 080E (25415101M), 080H (25415101Q), 080A (25415141D) SEE 25-41-51-01K FOR NHA SEE 25-41-51-01M FOR NHA SEE 25-41-51-01Q FOR NHA SEE 25-41-51-41D FOR NHA	NP		RF
-001M	D2549020610271		. TOILET UNIT AND TOILET SHROUD used on 080C (25415101N), 080A (25415101S), 080D (25415101W), 080D (25415101Y), 080E (254151410), 080F(25415141G) SEE 25-41-51-01N FOR NHA SEE 25-41-51-01S FOR NHA SEE 25-41-51-01W FOR NHA SEE 25-41-51-01Y FOR NHA SEE 25-41-51-410 FOR NHA SEE 25-41-51-41G FOR NHA	NP		RF
-001N	R22540119604671		. TOILET UNIT AND TOILET SHROUD POST VSB A2-254-25-130 used on 080G (254151410), 080F (25415141K) SEE 25-41-51-410 FOR NHA SEE 25-41-51-41K FOR NHA	NP		RF
010A	D2547090004200		. . SHROUD ASSY-TOILET used on 001A			001

- ITEM NOT ILLUSTRATED

FIG. ITEM	PART NUMBER	AIRLINE STOCK NUMBER	NOMENCLATURE 1234567	EFF CODE	UNITS PER ASSY
-010B	D2547090003200		. . SHROUD ASSY-TOILET used on 001B, 001L, 001N		001
-010C	D2547090006000		. . SHROUD ASSY-TOILET used on 001C		001
-010D	D2547090003400		. . SHROUD ASSY-TOILET used on 001D, 001K		001
-010E	D2547090004400		. . SHROUD ASSY-TOILET used on 001E		001
-010F	D2547090006200		. . SHROUD ASSY-TOILET used on 001F		001
-010G	D2547090004800		. . SHROUD ASSY-TOILET used on 001G		001
-010H	D2547090003000		. . SHROUD ASSY-TOILET used on 001H		001
-010J	D2547090008400		. . SHROUD ASSY-TOILET used on 001J		001
-010K	D2547090009000		. . SHROUD ASSY-TOILET used on 001M		001
011A	D2547090100000		. . . SHROUD-TOILET, COLOURLESS used on 010A, 010B, 010C, 010D, 010E, 010F, 010G, 010H, 010J, 010K		001
012A	D2547090120000		. . . . SHROUD-TOILET, COLOURLESS used on 011A		001
013A	D2547090220000		. . . . COVER-RING, COLOURLESS used on 011A		001

- ITEM NOT ILLUSTRATED

FIG. ITEM	PART NUMBER	AIRLINE STOCK NUMBER	NOMENCLATURE 1234567	EFF CODE	UNITS PER ASSY
020A	D2547090300000		. . . SPACER used on 010A, 010B, 010C, 010D, 010E, 010F, 010G, 010H, 010J, 010K		005
030A	DAN77-2		. . . SECTION-HOSE USE AS REQUIRED REQUIRED LENGTH 900 MM used on 010A, 010B, 010C, 010D, 010E, 010F, 010G, 010H, 010J, 010K		AR
040A	MS24693C52		. . SCREW used on 001A, 001B, 001C, 001D, 001E, 001F, 001G, 001H, 001J, 001K, 001L, 001M, 001N		002
050A	NSA5067-08-2		. . NUT used on 001A, 001B, 001C, 001D, 001E, 001F, 001G, 001H, 001J, 001K, 001L, 001M, 001N		002
060A	A225400460-512		. . SEAT ASSY-TOILET used on 001A		001
-060B	A225400460-504		. . SEAT ASSY-TOILET used on 001B, 001L, 001N		001
-060C	A225400460-532		. . SEAT ASSY-TOILET used on 001C		001
-060D	A225400460-524		. . SEAT ASSY-TOILET used on 001D		001
-060E	A225400460-556		. . SEAT ASSY-TOILET used on 001E		001
-060F	A225400460-534		. . SEAT ASSY-TOILET used on 001F		001

- ITEM NOT ILLUSTRATED

FIG. ITEM	PART NUMBER	AIRLINE STOCK NUMBER	NOMENCLATURE 1234567	EFF CODE	UNITS PER ASSY
-060G	A225400460-536		. . SEAT ASSY-TOILET used on 001G		001
-060H	A225400460-502		. . SEAT ASSY-TOILET used on 001H		001
-060J	A225400460-568		. . SEAT ASSY-TOILET used on 001J		001
-060K	A225400460-526		. . SEAT ASSY-TOILET used on 001K		001
-060L	A225400460-562		. . SEAT ASSY-TOILET used on 001M		001
070A	SACV11595-200		. . . NUT used on 060A, 060B, 060C, 060D, 060E, 060F, 060G, 060H, 060J, 060K, 060L		002
080A	SACV11594-200		. . . GASKET used on 060A, 060B, 060C, 060D, 060E, 060F, 060G, 060H, 060J, 060K, 060L		002
090A	SACV11596-200		. . . FASTENER-UNPAINTED used on 060A, 060B, 060C, 060D, 060E, 060F, 060G, 060H, 060J, 060K, 060L		002
100A	SACV11604-000		. . . COVER-TOILET,UNPAINTED used on 060A, 060B, 060C, 060D, 060E, 060F, 060G, 060H, 060J, 060K, 060L		001
110A	SACV11592-202		. . . . BUFFER-UNPAINTED used on 100A		004

- ITEM NOT ILLUSTRATED

FIG. ITEM	PART NUMBER	AIRLINE STOCK NUMBER	NOMENCLATURE 1234567	EFF CODE	UNITS PER ASSY
120A	SACV11603-010		. . . SEAT-TOILET,UNPAINTED used on 060A, 060B, 060C, 060D, 060E, 060F, 060G, 060H, 060J, 060K, 060L		001
130A	SACV11592-202		. . . . BUFFER-UNPAINTED used on 120A		002
140A	SACV11593-212		. . . . BUFFER used on 120A		006
150A	A225400461-540		. . BRACKET-SUPPORT used on 001A		001
-150B	A225400461-506		. . BRACKET-SUPPORT used on 001B, 001L, 001N		001
-150C	A225400461-510		. . BRACKET-SUPPORT used on 001C		001
-150D	A225400461-500		. . BRACKET-SUPPORT used on 001D, 001K		001
-150E	A225400461-502		. . BRACKET-SUPPORT used on 001E		001
-150F	A225400461-508		. . BRACKET-SUPPORT used on 001F		001
-150G	A225400461-516		. . BRACKET-SUPPORT used on 001G		001
-150H	A225400461-504		. . BRACKET-SUPPORT used on 001H		001
-150J	A225400461-536		. . BRACKET-SUPPORT used on 001J		001
-150K	A225400461-544		. . BRACKET-SUPPORT used on 001M		001

- ITEM NOT ILLUSTRATED

FIG. ITEM	PART NUMBER	AIRLINE STOCK NUMBER	NOMENCLATURE 1234567	EFF CODE	UNITS PER ASSY
160A	A225400461-541		. . BRACKET-SUPPORT used on 001A		001
-160B	A225400461-507		. . BRACKET-SUPPORT used on 001B, 001L, 001N		001
-160C	A225400461-511		. . BRACKET-SUPPORT used on 001C		001
-160D	A225400461-501		. . BRACKET-SUPPORT used on 001D, 001K		001
-160E	A225400461-503		. . BRACKET-SUPPORT used on 001E		001
-160F	A225400461-509		. . BRACKET-SUPPORT used on 001F		001
-160G	A225400461-517		. . BRACKET-SUPPORT used on 001G		001
-160H	A225400461-505		. . BRACKET-SUPPORT used on 001H		001
-160J	A225400461-537		. . BRACKET-SUPPORT used on 001J		001
-160K	A225400461-545		. . BRACKET-SUPPORT used on 001M		001
170A	NAS1801-08-5		. . SCREW POST SB 25-1640 used on 001A, 001B, 001C, 001D, 001E, 001F, 001G, 001H, 001J, 001K, 001L, 001M, 001N		005

- ITEM NOT ILLUSTRATED

FIG. ITEM	PART NUMBER	AIRLINE STOCK NUMBER	NOMENCLATURE 1234567	EFF CODE	UNITS PER ASSY
175A	NAS1096-2-12		. . SCREW PRE VSB A2-254-25-130 BUY PN NAS1801-08-12 used on 001A, 001B, 001C, 001D, 001E, 001F, 001G, 001H, 001J, 001K, 001L, 001M		005
-175B	NAS1801-08-10		. . SCREW POST VSB A2-254-25-130 used on 001N		005
180A	ASNA0113-40ADL		. . WASHER PRE VSB A2-254-25-130 used on 001A, 001B, 001C, 001D, 001E, 001F, 001G, 001H, 001J, 001K, 001L, 001M		010
-180B	ASNA0113-40ADL		. . WASHER POST VSB A2-254-25-130 used on 001N		015
190A	MS21042-08		. . NUT used on 001A, 001B, 001C, 001D, 001E, 001F, 001G, 001H, 001J, 001K, 001L, 001M, 001N		005
200A	NAS564C19		. . BOLT used on 001A, 001B, 001C, 001D, 001E, 001F, 001G, 001H, 001J, 001K, 001L, 001M, 001N		004
210A	MS35338-158		. . WASHER-LOCK used on 001A, 001B, 001C, 001D, 001E, 001F, 001G, 001H, 001J, 001K, 001L, 001M, 001N		004
220A	NSA5307-5C		. . WASHER used on 001A, 001B, 001C, 001D, 001E, 001F, 001G, 001H, 001J, 001K, 001L, 001M, 001N		004

- ITEM NOT ILLUSTRATED

FIG. ITEM	PART NUMBER	AIRLINE STOCK NUMBER	NOMENCLATURE 1234567	EFF CODE	UNITS PER ASSY
230A	14330-004A1		. . TOILET ASSY used on 001A, 001B, 001C, 001D, 001E, 001F, 001G, 001H, 001J, 001K, 001L, 001M, 001N		001
-230B	14320-002C1		. . TOILET ASSY used on 001L		001

- ITEM NOT ILLUSTRATED

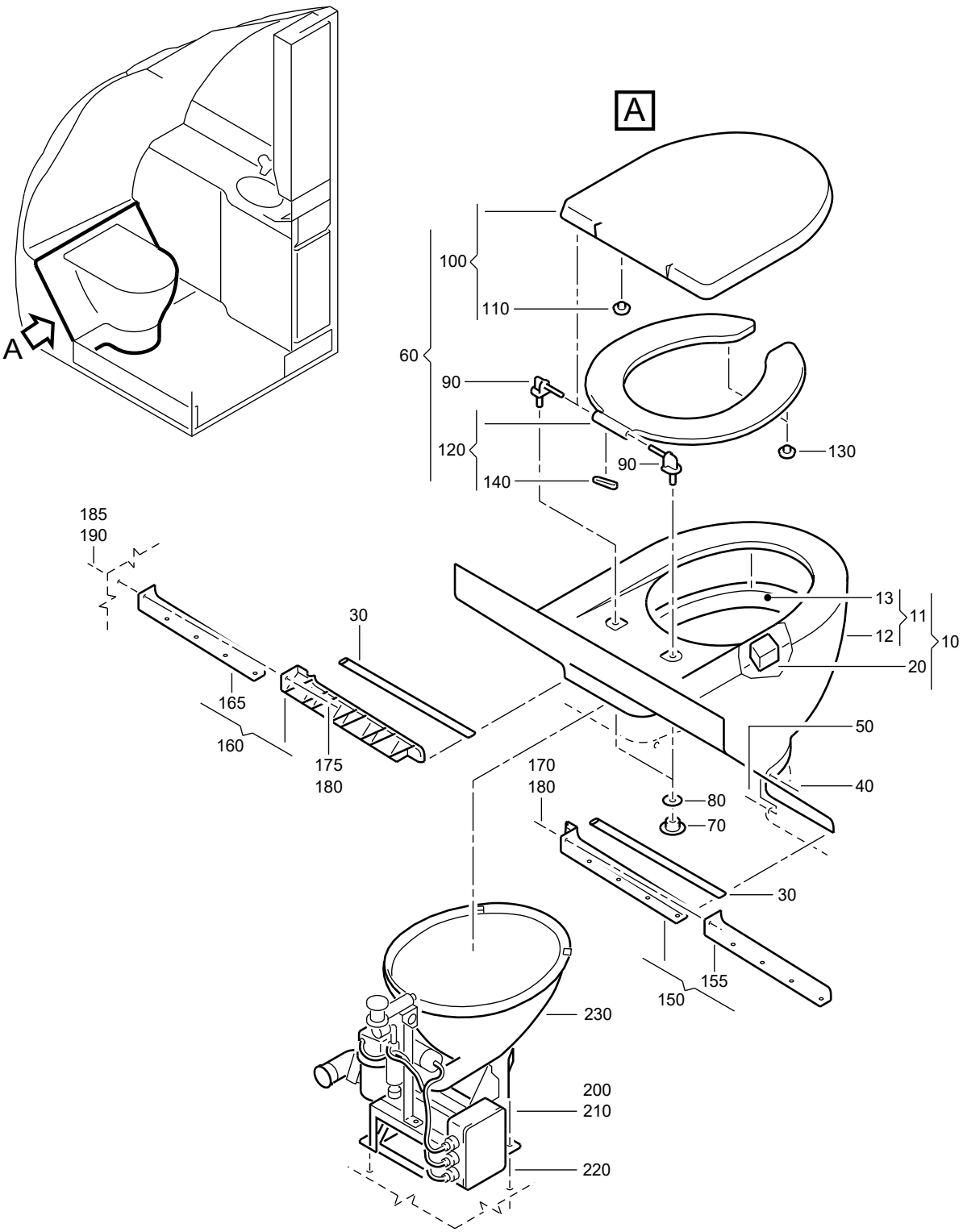

F_PL_254151_12_D_01_02

TOILET UNIT AND TOILET SHROUD
Figure 12D/EN254151SHEET12D01

FIG. ITEM	PART NUMBER	AIRLINE STOCK NUMBER	NOMENCLATURE 1234567		EFF CODE	UNITS PER ASSY
12D						
-001A	D2549030507271		. TOILET UNIT AND TOILET SHROUD used on 080D (25415101N), 080F (25415101Q), 080E (25415101U), 080C (25415101X), 080E (25415101Y), 080C(25415141C), 080A (25415141F), 080E (25415141H) SEE 25-41-51-01N FOR NHA SEE 25-41-51-01Q FOR NHA SEE 25-41-51-01U FOR NHA SEE 25-41-51-01X FOR NHA SEE 25-41-51-01Y FOR NHA SEE 25-41-51-41C FOR NHA SEE 25-41-51-41F FOR NHA SEE 25-41-51-41H FOR NHA	NP		RF
-001B	D2549020605471		. TOILET UNIT AND TOILET SHROUD used on 080B (25415101P), 080G (25415101Y), 080D (25415141J) SEE 25-41-51-01P FOR NHA SEE 25-41-51-01Y FOR NHA SEE 25-41-51-41J FOR NHA	NP		RF
-001C	D2549020604671		. TOILET UNIT AND TOILET SHROUD used on 080A (25415101R) SEE 25-41-51-01R FOR NHA	NP		RF
-001D	D2549010601071		. TOILET UNIT AND TOILET SHROUD used on 080A (25415101N), 080E (25415101Q) SEE 25-41-51-01N FOR NHA SEE 25-41-51-01Q FOR NHA	NP		RF

- ITEM NOT ILLUSTRATED

FIG. ITEM	PART NUMBER	AIRLINE STOCK NUMBER	NOMENCLATURE 1234567		EFF CODE	UNITS PER ASSY
-001E	D2549010602071		. TOILET UNIT AND TOILET SHROUD used on 080C (25415101U), 080D (25415101X), 080D (25415141C) SEE 25-41-51-01U FOR NHA SEE 25-41-51-01X FOR NHA SEE 25-41-51-41C FOR NHA	NP		RF
-001F	D2549030511671		. TOILET UNIT AND TOILET SHROUD used on 080D (25415101U), 080F (25415101Y), 080E (25415101Z), 080F (25415141A), 080D (25415141B), 080E (25415141D), 080D (25415141G) SEE 25-41-51-01U FOR NHA SEE 25-41-51-01Y FOR NHA SEE 25-41-51-01Z FOR NHA SEE 25-41-51-41A FOR NHA SEE 25-41-51-41B FOR NHA SEE 25-41-51-41D FOR NHA SEE 25-41-51-41G FOR NHA	NP		RF
-001G	D2549020712471		. TOILET UNIT AND TOILET SHROUD used on 080E (25415141A) SEE 25-41-51-41A FOR NHA	NP		RF
-001H	D2549020710071		. TOILET UNIT AND TOILET SHROUD used on 080B (25415141A), 080B (25415141J) SEE 25-41-51-41A FOR NHA SEE 25-41-51-41J FOR NHA	NP		RF
-001J	D2549020507471		. TOILET UNIT AND TOILET SHROUD used on 080A (25415141H) SEE 25-41-51-41H FOR NHA	NP		RF

- ITEM NOT ILLUSTRATED

FIG. ITEM	PART NUMBER	AIRLINE STOCK NUMBER	NOMENCLATURE 1234567	EFF CODE	UNITS PER ASSY
-001K	D2549020513071		. TOILET UNIT AND TOILET SHROUD NP used on 080E (25415141J), 080A (25415141U), 080B(25415141Z), 080B (25415142C) SEE 25-41-51-41J FOR NHA SEE 25-41-51-41U FOR NHA SEE 25-41-51-41Z FOR NHA SEE 25-41-51-42C FOR NHA		RF

- ITEM NOT ILLUSTRATED

FIG. ITEM	PART NUMBER	AIRLINE STOCK NUMBER	NOMENCLATURE 1234567	EFF CODE	UNITS PER ASSY
-001L	D2549010607071		. TOILET UNIT AND TOILET SHROUD NP PRE VSB A2-254-25-106 PRE VSB A2-254-25-130 used on 080F (25415141J), 080E (25415141L), 080E(25415141M), 080D (25415141N), 080C (25415141P), 090A(25415141Q), 080B (25415141R), 080B (25415141S), 080B(25415141T), 080B (25415141U), 080A (25415141V), 080A(25415141W), 080B (25415141X), 080C (25415141Y), 080A(25415141Z), 080D (254151420), 080B (25415142A), 080C(25415142B), 080C (25415142C), 080A (25415142D), 080C(25415142E), 080C (25415142F), 080B (25415142G), 080C(25415142K) SEE 25-41-51-41J FOR NHA SEE 25-41-51-41L FOR NHA SEE 25-41-51-41M FOR NHA SEE 25-41-51-41N FOR NHA SEE 25-41-51-41P FOR NHA SEE 25-41-51-41Q FOR NHA SEE 25-41-51-41R FOR NHA SEE 25-41-51-41S FOR NHA SEE 25-41-51-41T FOR NHA SEE 25-41-51-41U FOR NHA SEE 25-41-51-41V FOR NHA SEE 25-41-51-41W FOR NHA SEE 25-41-51-41X FOR NHA SEE 25-41-51-41Y FOR NHA SEE 25-41-51-41Z FOR NHA SEE 25-41-51-420 FOR NHA SEE 25-41-51-42A FOR NHA SEE 25-41-51-42B FOR NHA SEE 25-41-51-42C FOR NHA SEE 25-41-51-42D FOR NHA		RF

- ITEM NOT ILLUSTRATED

FIG. ITEM	PART NUMBER	AIRLINE STOCK NUMBER	NOMENCLATURE 1234567		EFF CODE	UNITS PER ASSY
			SEE 25-41-51-42E FOR NHA SEE 25-41-51-42F FOR NHA SEE 25-41-51-42G FOR NHA SEE 25-41-51-42K FOR NHA			
-001M	D2549020512271		. TOILET UNIT AND TOILET SHROUD used on 080D (25415141L), 080E (25415141P), 080E(25415141V), 080D (25415141X), 080E (25415141Z), 080E(254151420), 080C (25415142A), 080B (25415142B), 080D(25415142C), 080B (25415142D), 080B (25415142F) SEE 25-41-51-41L FOR NHA SEE 25-41-51-41P FOR NHA SEE 25-41-51-41V FOR NHA SEE 25-41-51-41X FOR NHA SEE 25-41-51-41Z FOR NHA SEE 25-41-51-420 FOR NHA SEE 25-41-51-42A FOR NHA SEE 25-41-51-42B FOR NHA SEE 25-41-51-42C FOR NHA SEE 25-41-51-42D FOR NHA SEE 25-41-51-42F FOR NHA	NP		RF
-001N	D2549010613471		. TOILET UNIT AND TOILET SHROUD POST SB 38-1059 used on 080G (25415141Z), 080E (25415142B) SEE 25-41-51-41Z FOR NHA SEE 25-41-51-42B FOR NHA	NP		RF
-001P	D2547161202871		. TOILET UNIT AND TOILET SHROUD POST SB 25-1674 used on 080G (25415141M) SEE 25-41-51-41M FOR NHA	NP		RF

- ITEM NOT ILLUSTRATED

FIG. ITEM	PART NUMBER	AIRLINE STOCK NUMBER	NOMENCLATURE 1234567	EFF CODE	UNITS PER ASSY
-001Q	R22540166200071		. TOILET UNIT AND TOILET SHROUD NP POST VSB A2-254-25-106 used on 080E (25415142C), 080H (25415142G) SEE 25-41-51-42C FOR NHA SEE 25-41-51-42G FOR NHA		RF
-001R	R22540119605071		. TOILET UNIT AND TOILET SHROUD NP POST VSB A2-254-25-130 used on 080G (25415141N), 080F (25415141R), 080F (25415141W), 080G (25415141X) SEE 25-41-51-41N FOR NHA SEE 25-41-51-41R FOR NHA SEE 25-41-51-41W FOR NHA SEE 25-41-51-41X FOR NHA		RF
010A	D2547090008600		. . SHROUD ASSY-TOILET used on 001A		001
-010B	D2547090007200		. . SHROUD ASSY-TOILET used on 001B, 001K		001
-010C	D2547090008000		. . SHROUD ASSY-TOILET used on 001C		001
-010D	D2547090004400		. . SHROUD ASSY-TOILET used on 001D, 001J		001
-010E	D2547090003400		. . SHROUD ASSY-TOILET used on 001E		001
-010F	D2547090005400		. . SHROUD ASSY-TOILET used on 001F SUPSD BY ITEM 010L		001
-010G	D2547090007800		. . SHROUD ASSY-TOILET used on 001G, 001M, 001N		001

- ITEM NOT ILLUSTRATED

FIG. ITEM	PART NUMBER	AIRLINE STOCK NUMBER	NOMENCLATURE 1234567	EFF CODE	UNITS PER ASSY
-010H	D2547090009600		. . SHROUD ASSY-TOILET used on 001H		001
-010J	D2547090003200		. . SHROUD ASSY-TOILET PRE VSB A2-254-25-106 used on 001L, 001P, 001R		001
-010K	A225400465-900		. . SHROUD ASSY-TOILET POST VSB A2-254-25-106 used on 001Q		001
-010L	S125400465-500		. . SHROUD ASSY-TOILET used on 001F SUPSDS ITEM 010F		001
011A	D2547090100000		. . . SHROUD-TOILET, COLOURLESS used on 010A, 010B, 010C, 010D, 010E, 010F, 010G, 010H, 010J, 010K, 010L		001
012A	D2547090120000		. . . . SHROUD-TOILET, COLOURLESS used on 011A		001
013A	D2547090220000		. . . . COVER-RING, COLOURLESS used on 011A		001
020A	D2547090300000		. . . SPACER used on 010A, 010B, 010C, 010D, 010E, 010F, 010G, 010H, 010J, 010K, 010L		005
030A	DAN77-2		. . . SECTION-HOSE USE AS REQUIRED REQUIRED LENGTH 900 MM used on 010A, 010B, 010C, 010D, 010E, 010F, 010G, 010H, 010J, 010K, 010L		AR

- ITEM NOT ILLUSTRATED

FIG. ITEM	PART NUMBER	AIRLINE STOCK NUMBER	NOMENCLATURE 1234567	EFF CODE	UNITS PER ASSY
040A	MS24693C52		. . SCREW used on 001A, 001B, 001C, 001D, 001E, 001F, 001G, 001H, 001J, 001K, 001L, 001M, 001N, 001P, 001Q, 001R		002
050A	NSA5067-08-2		. . NUT used on 001A, 001B, 001C, 001D, 001E, 001F, 001G, 001H, 001J, 001K, 001L, 001M, 001N, 001P, 001Q, 001R		002
060A	A225400460-554		. . SEAT ASSY-TOILET used on 001A		001
-060B	A225400460-546		. . SEAT ASSY-TOILET used on 001B, 001K		001
-060C	A225400460-564		. . SEAT ASSY-TOILET used on 001C		001
-060D	A225400460-556		. . SEAT ASSY-TOILET used on 001D, 001J		001
-060E	A225400460-502		. . SEAT ASSY-TOILET used on 001E		001
-060F	A225400460-524		. . SEAT ASSY-TOILET used on 001F		001
-060G	A225400460-552		. . SEAT ASSY-TOILET used on 001G, 001M, 001N		001
-060H	A225400460-578		. . SEAT ASSY-TOILET used on 001H		001
-060J	A225400460-504		. . SEAT ASSY-TOILET PRE VSB A2-254-25-106 used on 001L, 001P, 001R		001

- ITEM NOT ILLUSTRATED

FIG. ITEM	PART NUMBER	AIRLINE STOCK NUMBER	NOMENCLATURE 1234567	EFF CODE	UNITS PER ASSY
-060K	A225400460-588		. . SEAT ASSY-TOILET POST VSB A2-254-25-106 used on 001Q		001
070A	SACV11595-200		. . . NUT used on 060A, 060B, 060C, 060D, 060E, 060F, 060G, 060H, 060J, 060K		002
080A	SACV11594-200		. . . GASKET used on 060A, 060B, 060C, 060D, 060E, 060F, 060G, 060H, 060J, 060K		002
090A	SACV11596-200		. . . FASTENER-UNPAINTED used on 060A, 060B, 060C, 060D, 060E, 060F, 060G, 060H, 060J, 060K		002
100A	SACV11604-000		. . . COVER-TOILET,UNPAINTED used on 060A, 060B, 060C, 060D, 060E, 060F, 060G, 060H, 060J, 060K		001
110A	SACV11592-202		. . . . BUFFER-UNPAINTED used on 100A		004
120A	SACV11603-010		. . . SEAT-TOILET,UNPAINTED used on 060A, 060B, 060C, 060D, 060E, 060F, 060G, 060H, 060J, 060K		001
130A	SACV11592-202		. . . . BUFFER-UNPAINTED used on 120A		002
140A	SACV11593-212		. . . . BUFFER used on 120A		006
150A	A225400461-538		. . BRACKET-SUPPORT used on 001A		001

- ITEM NOT ILLUSTRATED

FIG. ITEM	PART NUMBER	AIRLINE STOCK NUMBER	NOMENCLATURE 1234567	EFF CODE	UNITS PER ASSY
-150B	A225400461-522		. . BRACKET-SUPPORT used on 001B, 001K		001
-150C	A225400461-530		. . BRACKET-SUPPORT used on 001C		001
-150D	A225400461-502		. . BRACKET-SUPPORT used on 001D, 001J		001
-150E	A225400461-500		. . BRACKET-SUPPORT used on 001E		001
-150F	A225400461-514		. . BRACKET-SUPPORT used on 001F		001
-150G	A225400461-528		. . BRACKET-SUPPORT used on 001G, 001M, 001N		001
-150H	A225400461-554		. . BRACKET-SUPPORT used on 001H		001
-150J	A225400461-506		. . BRACKET-SUPPORT PRE VSB A2-254-25-106 used on 001L, 001P, 001R		001
-150K	A225400461-930		. . BRACKET-SUPPORT POST VSB A2-254-25-106 used on 001Q		001
155A	DCIN201-11-1		. . . SECTION USE AS REQUIRED used on 150A, 150B, 150C, 150D, 150E, 150F, 150G,150H, 150J, 150K		AR
160A	A225400461-539		. . BRACKET-SUPPORT used on 001A		001
-160B	A225400461-523		. . BRACKET-SUPPORT used on 001B, 001K		001

- ITEM NOT ILLUSTRATED

FIG. ITEM	PART NUMBER	AIRLINE STOCK NUMBER	NOMENCLATURE 1234567	EFF CODE	UNITS PER ASSY
-160C	A225400461-531		. . BRACKET-SUPPORT used on 001C		001
-160D	A225400461-503		. . BRACKET-SUPPORT used on 001D, 001J		001
-160E	A225400461-501		. . BRACKET-SUPPORT used on 001E		001
-160F	A225400461-515		. . BRACKET-SUPPORT used on 001F		001
-160G	A225400461-529		. . BRACKET-SUPPORT used on 001G, 001M, 001N		001
-160H	A225400461-555		. . BRACKET-SUPPORT used on 001H		001
-160J	A225400461-507		. . BRACKET-SUPPORT PRE VSB A2-254-25-106 used on 001L, 001P, 001R		001
-160K	A225400461-931		. . BRACKET-SUPPORT POST VSB A2-254-25-106 used on 001Q		001
165A	DCIN201-11-1		. . . SECTION USE AS REQUIRED used on 160A, 160B, 160C, 160D, 160E, 160F, 160G,160H, 160J, 160K		AR
170A	NAS1801-08-5		. . SCREW POST SB 25-1640 used on 001A, 001B, 001C, 001D, 001E, 001F, 001G, 001H, 001J, 001K, 001L, 001M, 001N, 001P, 001Q, 001R		005

- ITEM NOT ILLUSTRATED

FIG. ITEM	PART NUMBER	AIRLINE STOCK NUMBER	NOMENCLATURE 1234567	EFF CODE	UNITS PER ASSY
175A	NAS1096-2-12		. . SCREW BUY PN NAS1801-08-12 PRE VSB A2-254-25-106 PRE VSB A2-254-25-130 used on 001A, 001B, 001C, 001D, 001E, 001F, 001G, 001H, 001J, 001K, 001L, 001M, 001N		005
-175B	NAS1801-08-14		. . SCREW POST SB 25-1674 used on 001P		005
-175C	NAS1801-08-10		. . SCREW POST VSB A2-254-25-106 POST VSB A2-254-25-130 used on 001Q, 001R		005
180A	ASNA0113-40ADL		. . WASHER used on 001A, 001B, 001C, 001D, 001E, 001F, 001G, 001H, 001J, 001K, 001L, 001M, 001N, 001P, 001Q, 001R		010
185A	ASNA0113-40ADL		. . WASHER POST SB 25-1674 POST VSB A2-254-25-130 POST VSB A2-254-25-106 used on 001P, 001Q, 001R		005
190A	MS21042-08		. . NUT used on 001A, 001B, 001C, 001D, 001E, 001F, 001G, 001H, 001J, 001K, 001L, 001M, 001N, 001P, 001Q, 001R		005
200A	NAS564C19		. . BOLT used on 001A, 001B, 001C, 001D, 001E, 001F, 001G, 001H, 001J, 001K, 001L, 001M, 001N, 001P, 001Q, 001R		004

- ITEM NOT ILLUSTRATED

FIG. ITEM	PART NUMBER	AIRLINE STOCK NUMBER	NOMENCLATURE 1234567	EFF CODE	UNITS PER ASSY
210A	MS35338-158		. . WASHER-LOCK used on 001A, 001B, 001C, 001D, 001E, 001F, 001G, 001H, 001J, 001K, 001L, 001M, 001N, 001P, 001Q, 001R		004
220A	NSA5307-5C		. . WASHER used on 001A, 001B, 001C, 001D, 001E, 001F, 001G, 001H, 001J, 001K, 001L, 001M, 001N, 001P, 001Q, 001R		004
230A	14330-004A1		. . TOILET ASSY used on 001A, 001B, 001C, 001D, 001E, 001F, 001G, 001H, 001J, 001K, 001L, 001M, 001P, 001Q, 001R		001
-230B	14320-002C1		. . TOILET ASSY used on 001D		001
-230C	14330-004B1		. . TOILET ASSY used on 001A, 001B, 001C, 001E, 001F, 001G, 001H, 001J, 001K, 001L, 001M, 001P, 001R		001
-230D	14330-008-1		. . TOILET ASSY POST SB 38-1059 used on 001A, 001B, 001C, 001E, 001F, 001G, 001H, 001J, 001N		001

- ITEM NOT ILLUSTRATED

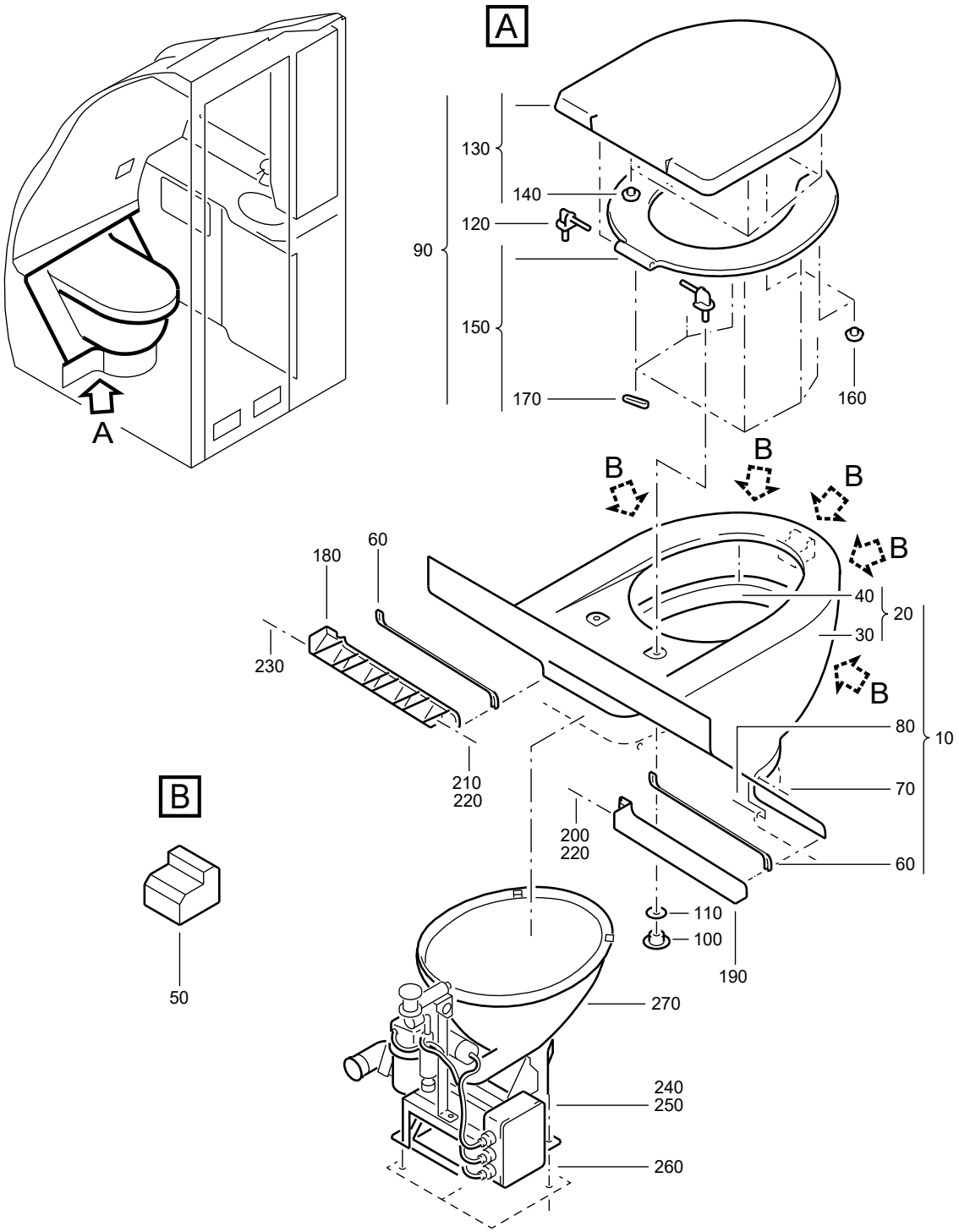

F_PL_254151_12_E_01_00

TOILET UNIT AND TOILET SHROUD
Figure 12E/EN254151SHEET12E01

FIG. ITEM	PART NUMBER	AIRLINE STOCK NUMBER	NOMENCLATURE 1234567	EFF CODE	UNITS PER ASSY
12E -001A	D2549020514671		. TOILET UNIT AND TOILET SHROUD NP used on 080E (25415141K), 080C (25415141L), 080C (25415141M), 080E (25415141N), 080B (25415141P), 080E(25415141R), 080A (25415141S), 080A (25415141T), 080C(25415141U), 080C (25415141V), 080E (25415141W), 080F(25415141X), 080A (25415141Y), 080F (25415141Z), 080F(254151420), 080A (25415142A), 080A (25415142B), 080A(25415142C), 080D (25415142D), 080B (25415142E), 080D(25415142F), 080C (25415142G) SEE 25-41-51-41K FOR NHA SEE 25-41-51-41L FOR NHA SEE 25-41-51-41M FOR NHA SEE 25-41-51-41N FOR NHA SEE 25-41-51-41P FOR NHA SEE 25-41-51-41R FOR NHA SEE 25-41-51-41S FOR NHA SEE 25-41-51-41T FOR NHA SEE 25-41-51-41U FOR NHA SEE 25-41-51-41V FOR NHA SEE 25-41-51-41W FOR NHA SEE 25-41-51-41X FOR NHA SEE 25-41-51-41Y FOR NHA SEE 25-41-51-41Z FOR NHA SEE 25-41-51-420 FOR NHA SEE 25-41-51-42A FOR NHA SEE 25-41-51-42B FOR NHA SEE 25-41-51-42C FOR NHA SEE 25-41-51-42D FOR NHA SEE 25-41-51-42E FOR NHA SEE 25-41-51-42F FOR NHA		RF

- ITEM NOT ILLUSTRATED

FIG. ITEM	PART NUMBER	AIRLINE STOCK NUMBER	NOMENCLATURE 1234567		EFF CODE	UNITS PER ASSY
			SEE 25-41-51-42G FOR NHA			
-001B	D2549010607871		. TOILET UNIT AND TOILET SHROUD used on 080B (25415141M), 080B (25415141N) SEE 25-41-51-41M FOR NHA SEE 25-41-51-41N FOR NHA	NP		RF
-001C	D2549030611271		. TOILET UNIT AND TOILET SHROUD used on 080D (25415141M), 080C (25415141N), 080C (25415141T), 080D (25415141W), 080E (25415141X), 080A(254151420) SEE 25-41-51-41M FOR NHA SEE 25-41-51-41N FOR NHA SEE 25-41-51-41T FOR NHA SEE 25-41-51-41W FOR NHA SEE 25-41-51-41X FOR NHA SEE 25-41-51-420 FOR NHA	NP		RF
-001D	D2549010607471		. TOILET UNIT AND TOILET SHROUD used on 080F (25415141M), 080A (25415141N), 080C (25415141W) SEE 25-41-51-41M FOR NHA SEE 25-41-51-41N FOR NHA SEE 25-41-51-41W FOR NHA	NP		RF

- ITEM NOT ILLUSTRATED

FIG. ITEM	PART NUMBER	AIRLINE STOCK NUMBER	NOMENCLATURE 1234567		EFF CODE	UNITS PER ASSY
-001E	D2549020512471		. TOILET UNIT AND TOILET SHROUD used on 080F (25415141N), 080B (25415141W), 080C(25415141X), 080B (254151420) SEE 25-41-51-41N FOR NHA SEE 25-41-51-41W FOR NHA SEE 25-41-51-41X FOR NHA SEE 25-41-51-420 FOR NHA	NP		RF
-001F	D2549020514871		. TOILET UNIT AND TOILET SHROUD used on 080A (25415141P), 080B (25415141V), 080B(25415141Y), 080C (25415141Z), 080E (25415142A), 080A(25415142F) SEE 25-41-51-41P FOR NHA SEE 25-41-51-41V FOR NHA SEE 25-41-51-41Y FOR NHA SEE 25-41-51-41Z FOR NHA SEE 25-41-51-42A FOR NHA SEE 25-41-51-42F FOR NHA	NP		RF
-001G	D2549030614671		. TOILET UNIT AND TOILET SHROUD used on 080D (25415141P), 080F (25415142G) SEE 25-41-51-41P FOR NHA SEE 25-41-51-42G FOR NHA	NP		RF
-001H	D2549020513671		. TOILET UNIT AND TOILET SHROUD used on 080A (25415141R) SEE 25-41-51-41R FOR NHA	NP		RF

- ITEM NOT ILLUSTRATED

FIG. ITEM	PART NUMBER	AIRLINE STOCK NUMBER	NOMENCLATURE 1234567	EFF CODE	UNITS PER ASSY
-001J	D2549020510671		. TOILET UNIT AND TOILET SHROUD NP used on 080C (25415141R), 080D (25415141V), 080D (25415141Y), 080A (25415142E) SEE 25-41-51-41R FOR NHA SEE 25-41-51-41V FOR NHA SEE 25-41-51-41Y FOR NHA SEE 25-41-51-42E FOR NHA		RF
-001K	D2549010607671		. TOILET UNIT AND TOILET SHROUD NP used on 080D (25415141R), 080A (25415141X) SEE 25-41-51-41R FOR NHA SEE 25-41-51-41X FOR NHA		RF
-001L	D2549010603671		. TOILET UNIT AND TOILET SHROUD NP used on 080D (254151410) SEE 25-41-51-410 FOR NHA		RF
-001M	D2549030408271		. TOILET UNIT AND TOILET SHROUD NP used on 080C (25415142D) SEE 25-41-51-42D FOR NHA		RF
010A	D2547090006200		. . SHROUD ASSY-TOILET used on 001A		001
-010B	D2547090008400		. . SHROUD ASSY-TOILET used on 001B, 001E		001
-010C	D2547090003000		. . SHROUD ASSY-TOILET used on 001C		001
-010D	D2547090004200		. . SHROUD ASSY-TOILET used on 001D, 001M		001
-010E	D2547090008600		. . SHROUD ASSY-TOILET used on 001B, 001E		001

- ITEM NOT ILLUSTRATED

FIG. ITEM	PART NUMBER	AIRLINE STOCK NUMBER	NOMENCLATURE 1234567	EFF CODE	UNITS PER ASSY
-010F	D2547090005400		. . SHROUD ASSY-TOILET used on 001F SUPSD BY ITEM 010M		001
-010G	D2547090009000		. . SHROUD ASSY-TOILET used on 001G		001
-010H	D2547090004400		. . SHROUD ASSY-TOILET used on 001H		001
-010J	D2547090009600		. . SHROUD ASSY-TOILET used on 001J		001
-010K	D2547090004800		. . SHROUD ASSY-TOILET used on 001K		001
-010L	D2547090007800		. . SHROUD ASSY-TOILET used on 001L		001
-010M	S125400465-500		. . SHROUD ASSY-TOILET used on 001F SUPSDS ITEM 010F		001
020A	D2547090100000		. . . SHROUD-TOILET, COLOURLESS used on 010A, 010B, 010C, 010D, 010E, 010F, 010G, 010H, 010J, 010K, 010L, 010M		001
030A	D2547090120000		. . . . SHROUD-TOILET, COLOURLESS used on 020A		001
040A	D2547090220000		. . . . COVER-RING, COLOURLESS used on 020A		001
050A	D2547090300000		. . . SPACER used on 010A, 010B, 010C, 010D, 010E, 010F, 010G, 010H, 010J, 010K, 010L, 010M		005

- ITEM NOT ILLUSTRATED

FIG. ITEM	PART NUMBER	AIRLINE STOCK NUMBER	NOMENCLATURE 1234567	EFF CODE	UNITS PER ASSY
060A	DAN77-2		. . . SECTION-HOSE USE AS REQUIRED REQUIRED LENGTH 900 MM used on 010A, 010B, 010C, 010D, 010E, 010F, 010G, 010H, 010J, 010K, 010L, 010M		AR
070A	MS24693C52		. . SCREW used on 001A, 001B, 001C, 001D, 001E, 001F, 001G, 001H, 001J, 001K, 001L, 001M		002
080A	NSA5067-08-2		. . NUT used on 001A, 001B, 001C, 001D, 001E, 001F, 001G, 001H, 001J, 001K, 001L, 001M		002
090A	A225400460-534		. . SEAT ASSY-TOILET used on 001A		001
-090B	A225400460-568		. . SEAT ASSY-TOILET used on 001B		001
-090C	A225400460-502		. . SEAT ASSY-TOILET used on 001C		001
-090D	A225400460-512		. . SEAT ASSY-TOILET used on 001D		001
-090E	A225400460-554		. . SEAT ASSY-TOILET used on 001E		001
-090F	A225400460-524		. . SEAT ASSY-TOILET used on 001F		001
-090G	A225400460-562		. . SEAT ASSY-TOILET used on 001G		001
-090H	A225400460-556		. . SEAT ASSY-TOILET used on 001H		001

- ITEM NOT ILLUSTRATED

FIG. ITEM	PART NUMBER	AIRLINE STOCK NUMBER	NOMENCLATURE 1234567	EFF CODE	UNITS PER ASSY
-090J	A225400460-578		. . SEAT ASSY-TOILET used on 001J		001
-090K	A225400460-536		. . SEAT ASSY-TOILET used on 001K		001
-090L	A225400460-552		. . SEAT ASSY-TOILET used on 001L		001
-090M	A225400460-558		. . SEAT ASSY-TOILET used on 001M		001
100A	SACV11595-200		. . . NUT used on 090A, 090B, 090C, 090D, 090E, 090F, 090G, 090H, 090J, 090K, 090L, 090M		002
110A	SACV11594-200		. . . GASKET used on 090A, 090B, 090C, 090D, 090E, 090F, 090G, 090H, 090J, 090K, 090L, 090M		002
120A	SACV11596-200		. . . FASTENER-UNPAINTED used on 090A, 090B, 090C, 090D, 090E, 090F, 090G, 090H, 090J, 090K, 090L, 090M		002
130A	SACV11604-000		. . . COVER-TOILET,UNPAINTED used on 090A, 090B, 090C, 090D, 090E, 090F, 090G, 090H, 090J, 090K, 090L, 090M		001
140A	SACV11592-202		. . . . BUFFER-UNPAINTED used on 130A		004
150A	SACV11603-010		. . . SEAT-TOILET,UNPAINTED used on 090A, 090B, 090C, 090D, 090E, 090F, 090G, 090H, 090J, 090K, 090L, 090M		001

- ITEM NOT ILLUSTRATED

FIG. ITEM	PART NUMBER	AIRLINE STOCK NUMBER	NOMENCLATURE 1234567	EFF CODE	UNITS PER ASSY
160A	SACV11592-202		. . . . BUFFER-UNPAINTED used on 150A		002
170A	SACV11593-212		. . . . BUFFER used on 150A		006
180A	A225400461-508		. . BRACKET-SUPPORT used on 001A		001
-180B	A225400461-536		. . BRACKET-SUPPORT used on 001B		001
-180C	A225400461-504		. . BRACKET-SUPPORT used on 001C		001
-180D	A225400461-540		. . BRACKET-SUPPORT used on 001D, 001M		001
-180E	A225400461-538		. . BRACKET-SUPPORT used on 001E		001
-180F	A225400461-514		. . BRACKET-SUPPORT used on 001F		001
-180G	A225400461-544		. . BRACKET-SUPPORT used on 001G		001
-180H	A225400461-502		. . BRACKET-SUPPORT used on 001H		001
-180J	A225400461-554		. . BRACKET-SUPPORT used on 001J		001
-180K	A225400461-516		. . BRACKET-SUPPORT used on 001K		001
-180L	A225400461-528		. . BRACKET-SUPPORT used on 001L		001
190A	A225400461-509		. . BRACKET-SUPPORT used on 001A		001

- ITEM NOT ILLUSTRATED

FIG. ITEM	PART NUMBER	AIRLINE STOCK NUMBER	NOMENCLATURE 1234567	EFF CODE	UNITS PER ASSY
-190B	A225400461-537		. . BRACKET-SUPPORT used on 001B		001
-190C	A225400461-505		. . BRACKET-SUPPORT used on 001C		001
-190D	A225400461-541		. . BRACKET-SUPPORT used on 001D, 001M		001
-190E	A225400461-539		. . BRACKET-SUPPORT used on 001E		001
-190F	A225400461-515		. . BRACKET-SUPPORT used on 001F		001
-190G	A225400461-545		. . BRACKET-SUPPORT used on 001G		001
-190H	A225400461-503		. . BRACKET-SUPPORT used on 001H		001
-190J	A225400461-555		. . BRACKET-SUPPORT used on 001J		001
-190K	A225400461-517		. . BRACKET-SUPPORT used on 001K		001
-190L	A225400461-529		. . BRACKET-SUPPORT used on 001L		001
200A	NAS1096-2-5		. . SCREW BUY PN NAS1801-08-5 used on 001A, 001B, 001C, 001D, 001E, 001F, 001G, 001H, 001J, 001K, 001L, 001M		005
210A	NAS1096-2-12		. . SCREW BUY PN NAS1801-08-12 used on 001A, 001B, 001C, 001D, 001E, 001F, 001G, 001H, 001J, 001K, 001L, 001M		005

- ITEM NOT ILLUSTRATED

FIG. ITEM	PART NUMBER	AIRLINE STOCK NUMBER	NOMENCLATURE 1234567	EFF CODE	UNITS PER ASSY
220A	ASNA0113-40ADL		. . WASHER used on 001A, 001B, 001C, 001D, 001E, 001F, 001G, 001H, 001J, 001K, 001L, 001M		010
230A	MS21042-08		. . NUT used on 001A, 001B, 001C, 001D, 001E, 001F, 001G, 001H, 001J, 001K, 001L, 001M		005
240A	NAS564C19		. . BOLT used on 001A, 001B, 001C, 001D, 001E, 001F, 001G, 001H, 001J, 001K, 001L, 001M		004
250A	MS35338-158		. . WASHER-LOCK used on 001A, 001B, 001C, 001D, 001E, 001F, 001G, 001H, 001J, 001K, 001L, 001M		004
260A	NSA5307-5C		. . WASHER used on 001A, 001B, 001C, 001D, 001E, 001F, 001G, 001H, 001J, 001K, 001L, 001M		004
270A	14330-004B1		. . TOILET ASSY used on 001A, 001B, 001C, 001D, 001E, 001F, 001G, 001H, 001J, 001K, 001M		001
-270B	14330-008-1		. . TOILET ASSY POST SB 38-1059 used on 001L		001

- ITEM NOT ILLUSTRATED

THIS PAGE IS INTENTIONALLY LEFT BLANK

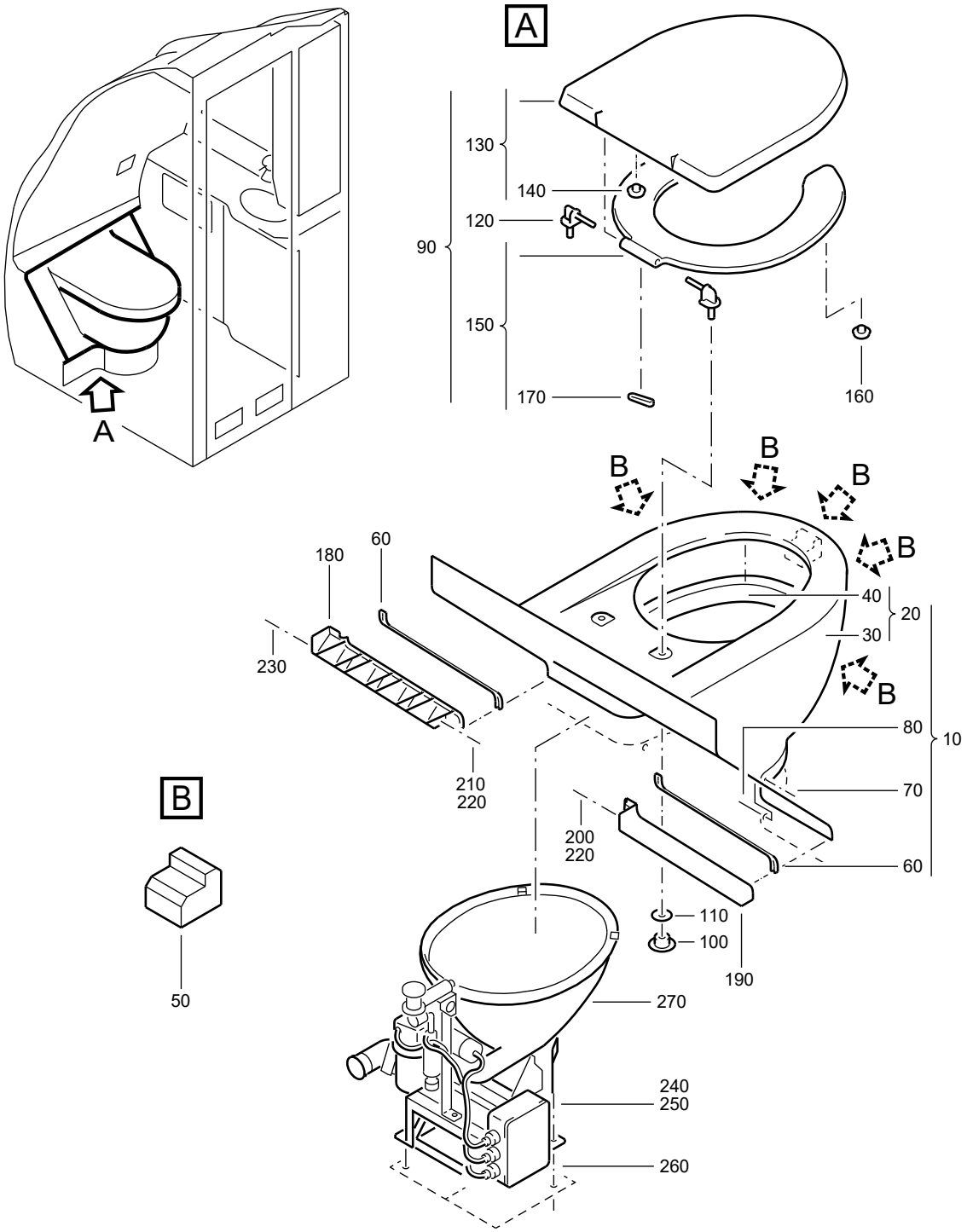

F_PL_254151_12_F_01_00

TOILET UNIT AND TOILET SHROUD
Figure 12F/EN254151SHEET12F01

FIG. ITEM	PART NUMBER	AIRLINE STOCK NUMBER	NOMENCLATURE 1234567	EFF CODE	UNITS PER ASSY
12F					
-001A	D2549030404871		. TOILET UNIT AND TOILET SHROUD NP used on 080D (25415141Z), 080D (25415142A) SEE 25-41-51-41Z FOR NHA SEE 25-41-51-42A FOR NHA		RF
010A	D2547090003400		. . SHROUD ASSY-TOILET used on 001A		001
020A	D2547090100000		. . . SHROUD-TOILET, COLOURLESS used on 010A		001
030A	D2547090120000		. . . . SHROUD-TOILET, COLOURLESS used on 020A		001
040A	D2547090220000		. . . . COVER-RING, COLOURLESS used on 020A		001
050A	D2547090300000		. . . SPACER used on 010A		005
060A	DAN77-2		. . . SECTION-HOSE USE AS REQUIRED REQUIRED LENGTH 900 MM used on 010A		AR
070A	MS24693C52		. . SCREW used on 001A		002
080A	NSA5067-08-2		. . NUT used on 001A		002
090A	A225400460-526		. . SEAT ASSY-TOILET used on 001A		001

- ITEM NOT ILLUSTRATED

FIG. ITEM	PART NUMBER	AIRLINE STOCK NUMBER	NOMENCLATURE 1234567	EFF CODE	UNITS PER ASSY
100A	SACV11595-200		. . . NUT used on 090A		002
110A	SACV11594-200		. . . GASKET used on 090A		002
120A	SACV11596-200		. . . FASTENER-UNPAINTED used on 090A		002
130A	SACV11604-000		. . . COVER-TOILET,UNPAINTED used on 090A		001
140A	SACV11592-202		. . . . BUFFER-UNPAINTED used on 130A		004
150A	SACV11603-010		. . . SEAT-TOILET,UNPAINTED used on 090A		001
160A	SACV11592-202		. . . . BUFFER-UNPAINTED used on 150A		002
170A	SACV11593-212		. . . . BUFFER used on 150A		006
180A	A225400461-500		. . BRACKET-SUPPORT used on 001A		001
190A	A225400461-501		. . BRACKET-SUPPORT used on 001A		001
200A	NAS1096-2-5		. . SCREW BUY PN NAS1801-08-5 used on 001A		005
210A	NAS1096-2-12		. . SCREW BUY PN NAS1801-08-12 used on 001A		005
220A	ASNA0113-40ADL		. . WASHER used on 001A		010

- ITEM NOT ILLUSTRATED

FIG. ITEM	PART NUMBER	AIRLINE STOCK NUMBER	NOMENCLATURE 1234567	EFF CODE	UNITS PER ASSY
230A	MS21042-08		. . NUT used on 001A		005
240A	NAS564C19		. . BOLT used on 001A		004
250A	MS35338-158		. . WASHER-LOCK used on 001A		004
260A	NSA5307-5C		. . WASHER used on 001A		004
270A	14330-004B1		. . TOILET ASSY used on 001A		001

- ITEM NOT ILLUSTRATED

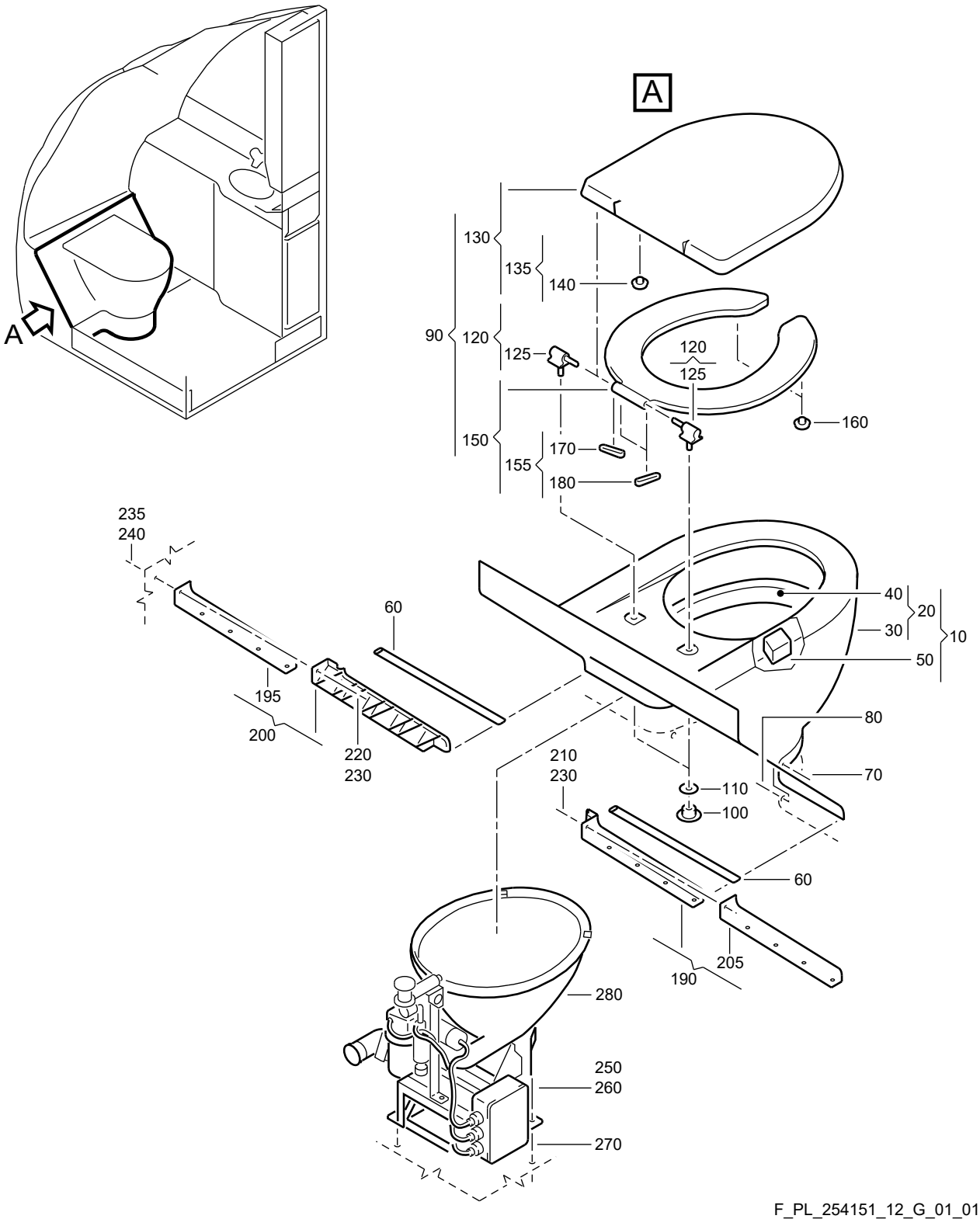

F_PL_254151_12_G_01_01

TOILET UNIT AND TOILET SHROUD
Figure 12G/EN254151SHEET12G01

FIG. ITEM	PART NUMBER	AIRLINE STOCK NUMBER	NOMENCLATURE 1234567	EFF CODE	UNITS PER ASSY
12G					
-001A	D2549020811871		. TOILET UNIT AND TOILET SHROUD NP PRE VSB A2-254-25-106 PRE VSB A2-254-25-130 used on 080C (254151420), 080D (25415142B), 080D (25415142E), 080E (25415142F), 080A (25415142G), 080D (25415142H), 080B (25415142J), 080A (25415142K), 080B (25415142L), 080C (25415142M), 080A (25415142N), 080B(25415142P), 080A (25415142Q), 080A (25415142R), 080C(25415142S), 080B (25415142T), 080A (25415142U) SEE 25-41-51-420 FOR NHA SEE 25-41-51-42B FOR NHA SEE 25-41-51-42E FOR NHA SEE 25-41-51-42F FOR NHA SEE 25-41-51-42G FOR NHA SEE 25-41-51-42H FOR NHA SEE 25-41-51-42J FOR NHA SEE 25-41-51-42K FOR NHA SEE 25-41-51-42L FOR NHA SEE 25-41-51-42M FOR NHA SEE 25-41-51-42N FOR NHA SEE 25-41-51-42P FOR NHA SEE 25-41-51-42Q FOR NHA SEE 25-41-51-42R FOR NHA SEE 25-41-51-42S FOR NHA SEE 25-41-51-42T FOR NHA SEE 25-41-51-42U FOR NHA		RF
-001B	D2549020813271		. TOILET UNIT AND TOILET SHROUD NP used on 080E (25415142D) SEE 25-41-51-42D FOR NHA		RF

- ITEM NOT ILLUSTRATED

FIG. ITEM	PART NUMBER	AIRLINE STOCK NUMBER	NOMENCLATURE 1234567		EFF CODE	UNITS PER ASSY
-001C	D2549030410071		. TOILET UNIT AND TOILET SHROUD used on 080F (25415142F), 080D (25415142G), 080B(25415142H), 080A (25415142J), 080E (25415142L), 080B(25415142M), 080C (25415142P), 080D (25415142Q), 080D(25415142T) SEE 25-41-51-42F FOR NHA SEE 25-41-51-42G FOR NHA SEE 25-41-51-42H FOR NHA SEE 25-41-51-42J FOR NHA SEE 25-41-51-42L FOR NHA SEE 25-41-51-42M FOR NHA SEE 25-41-51-42P FOR NHA SEE 25-41-51-42Q FOR NHA SEE 25-41-51-42T FOR NHA	NP		RF
-001D	D2549020400871		. TOILET UNIT AND TOILET SHROUD used on 080E (25415142G), 080G (25415142H), 080D (25415142M), 080B (25415142Q), 080A (25415142S), 080B(25415142U) SEE 25-41-51-42G FOR NHA SEE 25-41-51-42H FOR NHA SEE 25-41-51-42M FOR NHA SEE 25-41-51-42Q FOR NHA SEE 25-41-51-42S FOR NHA SEE 25-41-51-42U FOR NHA	NP		RF
-001E	D2549030409071		. TOILET UNIT AND TOILET SHROUD used on 080E (25415142E) SEE 25-41-51-42E FOR NHA	NP		RF

- ITEM NOT ILLUSTRATED

FIG. ITEM	PART NUMBER	AIRLINE STOCK NUMBER	NOMENCLATURE 1234567		EFF CODE	UNITS PER ASSY
-001F	D2549010610671		. TOILET UNIT AND TOILET SHROUD used on 080F (25415142E), 080D (25415142J), 080D(25415142K), 080B (25415142N), 080E (25415142R) SEE 25-41-51-42E FOR NHA SEE 25-41-51-42J FOR NHA SEE 25-41-51-42K FOR NHA SEE 25-41-51-42N FOR NHA SEE 25-41-51-42R FOR NHA	NP		RF
-001G	D2549020403271		. TOILET UNIT AND TOILET SHROUD used on 080G (25415142G), 080E (25415142H), 080G (25415142L), 080A (25415142M), 080C (25415142N), 080C (25415142R), 080B (25415142S), 080A (25415142T) SEE 25-41-51-42G FOR NHA SEE 25-41-51-42H FOR NHA SEE 25-41-51-42L FOR NHA SEE 25-41-51-42M FOR NHA SEE 25-41-51-42N FOR NHA SEE 25-41-51-42R FOR NHA SEE 25-41-51-42S FOR NHA SEE 25-41-51-42T FOR NHA	NP		RF
-001H	D2549030409471		. TOILET UNIT AND TOILET SHROUD used on 080A (25415142H) SEE 25-41-51-42H FOR NHA	NP		RF

- ITEM NOT ILLUSTRATED

FIG. ITEM	PART NUMBER	AIRLINE STOCK NUMBER	NOMENCLATURE 1234567		EFF CODE	UNITS PER ASSY
-001J	D2549010401071		. TOILET UNIT AND TOILET SHROUD used on 080C (25415142H), 080D (25415142L), 080E (25415142M), 080C (25415142U) SEE 25-41-51-42H FOR NHA SEE 25-41-51-42L FOR NHA SEE 25-41-51-42M FOR NHA SEE 25-41-51-42U FOR NHA	NP		RF
-001K	D2549030410671		. TOILET UNIT AND TOILET SHROUD used on 080B (25415142K), 080F (25415142L), 080B(25415142R), 080C (25415142T) SEE 25-41-51-42K FOR NHA SEE 25-41-51-42L FOR NHA SEE 25-41-51-42R FOR NHA SEE 25-41-51-42T FOR NHA	NP		RF
-001L	D2549010401471		. TOILET UNIT AND TOILET SHROUD used on 080C (25415142J), 080F (25415142N), 080A(25415142P) SEE 25-41-51-42J FOR NHA SEE 25-41-51-42N FOR NHA SEE 25-41-51-42P FOR NHA	NP		RF
-001M	D2549030412471		. TOILET UNIT AND TOILET SHROUD used on 080F (25415142H), 080A (25415142L), 080F(25415142Q), 080F (25415142U) SEE 25-41-51-42H FOR NHA SEE 25-41-51-42L FOR NHA SEE 25-41-51-42Q FOR NHA SEE 25-41-51-42U FOR NHA	NP		RF

- ITEM NOT ILLUSTRATED

FIG. ITEM	PART NUMBER	AIRLINE STOCK NUMBER	NOMENCLATURE 1234567	EFF CODE	UNITS PER ASSY
-001N	D2547161203471		. TOILET UNIT AND TOILET SHROUD NP POST SB 25-1674 used on 080G (25415142N) SEE 25-41-51-42N FOR NHA		RF
-001P	R22540168900471		. TOILET UNIT AND TOILET SHROUD NP POST VSB A2-254-25-106 used on 080H (25415142L), 080F (25415142T) SEE 25-41-51-42L FOR NHA SEE 25-41-51-42T FOR NHA		RF
-001Q	R22540119605871		. TOILET UNIT AND TOILET SHROUD NP POST VSB A2-254-25-130 used on 080G (254151420), 080G (25415142E), 080E (25415142J), 080D (25415142P) SEE 25-41-51-420 FOR NHA SEE 25-41-51-42E FOR NHA SEE 25-41-51-42J FOR NHA SEE 25-41-51-42P FOR NHA		RF
010A	D2547090003200		. . SHROUD ASSY-TOILET PRE VSB A2-254-25-106 POST SB 25-1674 used on 001A, 001N, 001Q		001
-010B	D2547090005400		. . SHROUD ASSY-TOILET used on 001B, 001D SUPSD BY ITEM 010N		001
-010C	D2547090006200		. . SHROUD ASSY-TOILET used on 001C		001
-010D	D2547090003000		. . SHROUD ASSY-TOILET used on 001E		001

- ITEM NOT ILLUSTRATED

FIG. ITEM	PART NUMBER	AIRLINE STOCK NUMBER	NOMENCLATURE 1234567	EFF CODE	UNITS PER ASSY
-010E	D2547090008400		. . SHROUD ASSY-TOILET used on 001F		001
-010F	D2547090007200		. . SHROUD ASSY-TOILET used on 001G		001
-010G	D2547090009000		. . SHROUD ASSY-TOILET used on 001H		001
-010H	D2547090007800		. . SHROUD ASSY-TOILET used on 001J		001
-010J	D2547090009600		. . SHROUD ASSY-TOILET used on 001K		001
-010K	D2547090004800		. . SHROUD ASSY-TOILET used on 001L		001
-010L	D2547090003400		. . SHROUD ASSY-TOILET used on 001M		001
-010M	A225400465-900		. . SHROUD ASSY-TOILET POST VSB A2-254-25-106 used on 001P		001
-010N	S125400465-500		. . SHROUD ASSY-TOILET used on 001B SUPSDS ITEM 010B		001
020A	D2547090100000		. . . SHROUD-TOILET, COLOURLESS used on 010A, 010B, 010C, 010D, 010E, 010F, 010G, 010H, 010J, 010K, 010L, 010M, 010N		001
030A	D2547090120000		. . . . SHROUD-TOILET, COLOURLESS used on 020A		001

- ITEM NOT ILLUSTRATED

FIG. ITEM	PART NUMBER	AIRLINE STOCK NUMBER	NOMENCLATURE 1234567	EFF CODE	UNITS PER ASSY
040A	D2547090220000		. . . . COVER-RING, COLOURLESS used on 020A		001
050A	D2547090300000		. . . SPACER used on 010A, 010B, 010C, 010D, 010E, 010F, 010G, 010H, 010J, 010K, 010L, 010M, 010N		005
060A	DAN77-2		. . . SECTION-HOSE USE AS REQUIRED REQUIRED LENGTH 900 MM used on 010A, 010B, 010C, 010D, 010E, 010F, 010G, 010H, 010J, 010K, 010L, 010M, 010N		AR
070A	MS24693C52		. . SCREW used on 001A, 001B, 001C, 001D, 001E, 001F, 001G, 001H, 001J, 001K, 001L, 001M, 001N, 001P, 001Q		002
080A	NSA5067-08-2		. . NUT used on 001A, 001B, 001C, 001D, 001E, 001F, 001G, 001H, 001J, 001K, 001L, 001M, 001N, 001P, 001Q		002
090A	A425400467-704		. . SEAT ASSY-TOILET POST SB 25-1674 PRE VSB A2-254-25-106 used on 001A, 001N, 001Q		001
-090B	A425400467-724		. . SEAT ASSY-TOILET used on 001B, 001D		001
-090C	A425400467-734		. . SEAT ASSY-TOILET used on 001C		001

- ITEM NOT ILLUSTRATED

FIG. ITEM	PART NUMBER	AIRLINE STOCK NUMBER	NOMENCLATURE 1234567	EFF CODE	UNITS PER ASSY
-090D	A425400467-702		. . SEAT ASSY-TOILET used on 001E		001
-090E	A425400467-768		. . SEAT ASSY-TOILET used on 001F		001
-090F	A425400467-746		. . SEAT ASSY-TOILET used on 001G		001
-090G	A425400467-762		. . SEAT ASSY-TOILET used on 001H		001
-090H	A425400467-752		. . SEAT ASSY-TOILET used on 001J		001
-090J	A425400467-778		. . SEAT ASSY-TOILET used on 001K		001
-090K	A425400467-736		. . SEAT ASSY-TOILET used on 001L		001
-090L	A425400467-726		. . SEAT ASSY-TOILET used on 001M		001
-090M	A225400460-588		. . SEAT ASSY-TOILET POST VSB A2-254-25-106 used on 001P		001
100A	SACV11595-200		. . . NUT used on 090A, 090B, 090C, 090D, 090E, 090F, 090G, 090H, 090J, 090K, 090L, 090M		002
110A	SACV11594-200		. . . GASKET used on 090A, 090B, 090C, 090D, 090E, 090F, 090G, 090H, 090J, 090K, 090L, 090M		002
120A	A425400466-504		. . . FASTENER used on 090A, 090M		002

- ITEM NOT ILLUSTRATED

FIG. ITEM	PART NUMBER	AIRLINE STOCK NUMBER	NOMENCLATURE 1234567	EFF CODE	UNITS PER ASSY
-120B	A425400466-524		. . . FASTENER used on 090B		002
-120C	A425400466-534		. . . FASTENER used on 090C		002
-120D	A425400466-502		. . . FASTENER used on 090D		002
-120E	A425400466-568		. . . FASTENER used on 090E		002
-120F	A425400466-546		. . . FASTENER used on 090F		002
-120G	A425400466-562		. . . FASTENER used on 090G		002
-120H	A425400466-552		. . . FASTENER used on 090H		002
-120J	A425400466-578		. . . FASTENER used on 090J		002
-120K	A425400466-536		. . . FASTENER used on 090K		002
-120L	A425400466-526		. . . FASTENER used on 090L		002
125A	SACV11596-200		. . . . FASTENER-UNPAINTED used on 120A, 120B, 120C, 120D, 120E, 120F, 120G,120H, 120J, 120K, 120L		002
130A	A425400468-504		. . . COVER ASSY-TOILET used on 090A, 090M		001
-130B	A425400468-524		. . . COVER ASSY-TOILET used on 090B		001

- ITEM NOT ILLUSTRATED

FIG. ITEM	PART NUMBER	AIRLINE STOCK NUMBER	NOMENCLATURE 1234567	EFF CODE	UNITS PER ASSY
-130C	A425400468-534		. . . COVER ASSY-TOILET used on 090C		001
-130D	A425400468-502		. . . COVER ASSY-TOILET used on 090D		001
-130E	A425400468-568		. . . COVER ASSY-TOILET used on 090E		001
-130F	A425400468-546		. . . COVER ASSY-TOILET used on 090F		001
-130G	A425400468-562		. . . COVER ASSY-TOILET used on 090G		001
-130H	A425400468-552		. . . COVER ASSY-TOILET used on 090H		001
-130J	A425400468-578		. . . COVER ASSY-TOILET used on 090J		001
-130K	A425400468-536		. . . COVER ASSY-TOILET used on 090K		001
-130L	A425400468-526		. . . COVER ASSY-TOILET used on 090L		001
135A	SACV11604-000		. . . . COVER-TOILET, UNPAINTED used on 130A, 130B, 130C, 130D, 130E, 130F, 130G,130H, 130J, 130K, 130L		001
140A	SACV11592-202		. . . . . BUFFER-UNPAINTED used on 135A		004
150A	A425400461-600		. . . SEAT ASSY used on 090A, 090M		001
-150B	A425400461-632		. . . SEAT ASSY used on 090B		001

- ITEM NOT ILLUSTRATED

FIG. ITEM	PART NUMBER	AIRLINE STOCK NUMBER	NOMENCLATURE 1234567	EFF CODE	UNITS PER ASSY
-150C	A425400461-642		. . . SEAT ASSY used on 090C		001
-150D	A425400461-612		. . . SEAT ASSY used on 090D		001
-150E	A425400461-672		. . . SEAT ASSY used on 090E		001
-150F	A425400461-654		. . . SEAT ASSY used on 090F		001
-150G	A425400461-666		. . . SEAT ASSY used on 090G		001
-150H	A425400461-658		. . . SEAT ASSY used on 090H		001
-150J	A425400461-682		. . . SEAT ASSY used on 090J		001
-150K	A425400461-644		. . . SEAT ASSY used on 090K		001
-150L	A425400461-634		. . . SEAT ASSY used on 090L		001
155A	A3-254-0024-152		. . . . SEAT ASSY,UNPAINTED used on 150A, 150B, 150C, 150D, 150E, 150F, 150G,150H, 150J, 150K, 150L		001
160A	SACV11592-202		. . . . . BUFFER-UNPAINTED used on 155A		002
170A	SACV11593-212		. . . . . BUFFER used on 155A		008
180A	SACV11593-222		. . . . . BUFFER used on 155A		002

- ITEM NOT ILLUSTRATED

FIG. ITEM	PART NUMBER	AIRLINE STOCK NUMBER	NOMENCLATURE 1234567	EFF CODE	UNITS PER ASSY
190A	A225400461-506		. . BRACKET-SUPPORT PRE VSB A2-254-25-106 POST SB 25-1674 used on 001A, 001B, 001N, 001Q		001
-190B	A225400461-508		. . BRACKET-SUPPORT used on 001C		001
-190C	A225400461-514		. . BRACKET-SUPPORT used on 001D		001
-190D	A225400461-504		. . BRACKET-SUPPORT used on 001E		001
-190E	A225400461-536		. . BRACKET-SUPPORT used on 001F		001
-190F	A225400461-522		. . BRACKET-SUPPORT used on 001G		001
-190G	A225400461-544		. . BRACKET-SUPPORT used on 001H		001
-190H	A225400461-528		. . BRACKET-SUPPORT used on 001J		001
-190J	A225400461-554		. . BRACKET-SUPPORT used on 001K		001
-190K	A225400461-516		. . BRACKET-SUPPORT used on 001L		001
-190L	A225400461-500		. . BRACKET-SUPPORT used on 001M		001
-190M	A225400461-930		. . BRACKET-SUPPORT POST VSB A2-254-25-106 used on 001P		001

- ITEM NOT ILLUSTRATED

FIG. ITEM	PART NUMBER	AIRLINE STOCK NUMBER	NOMENCLATURE 1234567	EFF CODE	UNITS PER ASSY
195A	DCIN201-11-1		. . . SECTION USE AS REQUIRED used on 190A, 190B, 190C, 190D, 190E, 190F, 190G,190H, 190J, 190K, 190L, 190M		AR
200A	A225400461-507		. . BRACKET-SUPPORT PRE VSB A2-254-25-106 POST SB 25-1674 used on 001A, 001B, 001N, 001Q		001
-200B	A225400461-509		. . BRACKET-SUPPORT used on 001C		001
-200C	A225400461-515		. . BRACKET-SUPPORT used on 001D		001
-200D	A225400461-505		. . BRACKET-SUPPORT used on 001E		001
-200E	A225400461-537		. . BRACKET-SUPPORT used on 001F		001
-200F	A225400461-523		. . BRACKET-SUPPORT used on 001G		001
-200G	A225400461-545		. . BRACKET-SUPPORT used on 001H		001
-200H	A225400461-529		. . BRACKET-SUPPORT used on 001J		001
-200J	A225400461-555		. . BRACKET-SUPPORT used on 001K		001
-200K	A225400461-517		. . BRACKET-SUPPORT used on 001L		001
-200L	A225400461-501		. . BRACKET-SUPPORT used on 001M		001

- ITEM NOT ILLUSTRATED

FIG. ITEM	PART NUMBER	AIRLINE STOCK NUMBER	NOMENCLATURE 1234567	EFF CODE	UNITS PER ASSY
-200M	A225400461-931		. . BRACKET-SUPPORT POST VSB A2-254-25-106 used on 001P		001
205A	DCIN201-11-1		. . . SECTION USE AS REQUIRED used on 200A, 200B, 200C, 200D, 200E, 200F, 200G,200H, 200J, 200K, 200L, 200M		AR
210A	NAS1801-08-5		. . SCREW POST SB 25-1674 used on 001A, 001B, 001C, 001D, 001E, 001F, 001G, 001H, 001J, 001K, 001L, 001M, 001N, 001P, 001Q		005
220A	NAS1096-2-10		. . SCREW BUY PN NAS1801-08-10 PRE VSB A2-254-25-106 PRE VSB A2-254-25-130 used on 001A, 001B, 001C, 001D, 001E, 001F, 001G, 001H, 001J, 001K, 001L, 001M		005
-220B	NAS1801-08-14		. . SCREW POST SB 25-1674 used on 001N		005
-220C	NAS1801-08-10		. . SCREW POST VSB A2-254-25-106 POST VSB A2-254-25-130 used on 001P, 001Q		005
230A	ASNA0113-40ADL		. . WASHER used on 001A, 001B, 001C, 001D, 001E, 001F, 001G, 001H, 001J, 001K, 001L, 001M, 001N, 001P, 001Q		010

- ITEM NOT ILLUSTRATED

FIG. ITEM	PART NUMBER	AIRLINE STOCK NUMBER	NOMENCLATURE 1234567	EFF CODE	UNITS PER ASSY
235A	ASNA0113-40ADL		. . WASHER POST VSB A2-254-25-106 POST VSB A2-254-25-130 POST SB 25-1674 used on 001N, 001P, 001Q		005
240A	MS21042-08		. . NUT used on 001A, 001B, 001C, 001D, 001E, 001F, 001G, 001H, 001J, 001K, 001L, 001M, 001N, 001P, 001Q		005
250A	NAS564C19		. . BOLT used on 001A, 001B, 001C, 001D, 001E, 001F, 001G, 001H, 001J, 001K, 001L, 001M, 001N, 001P, 001Q		004
260A	MS35338-158		. . WASHER-LOCK used on 001A, 001B, 001C, 001D, 001E, 001F, 001G, 001H, 001J, 001K, 001L, 001M, 001N, 001P, 001Q		004
270A	NSA5307-5C		. . WASHER used on 001A, 001B, 001C, 001D, 001E, 001F, 001G, 001H, 001J, 001K, 001L, 001M, 001N, 001P, 001Q		004
280A	14330-004B1		. . TOILET ASSY used on 001A, 001B, 001C, 001D, 001E, 001F, 001G, 001H, 001J, 001K, 001L, 001M, 001N, 001P, 001Q		001

- ITEM NOT ILLUSTRATED

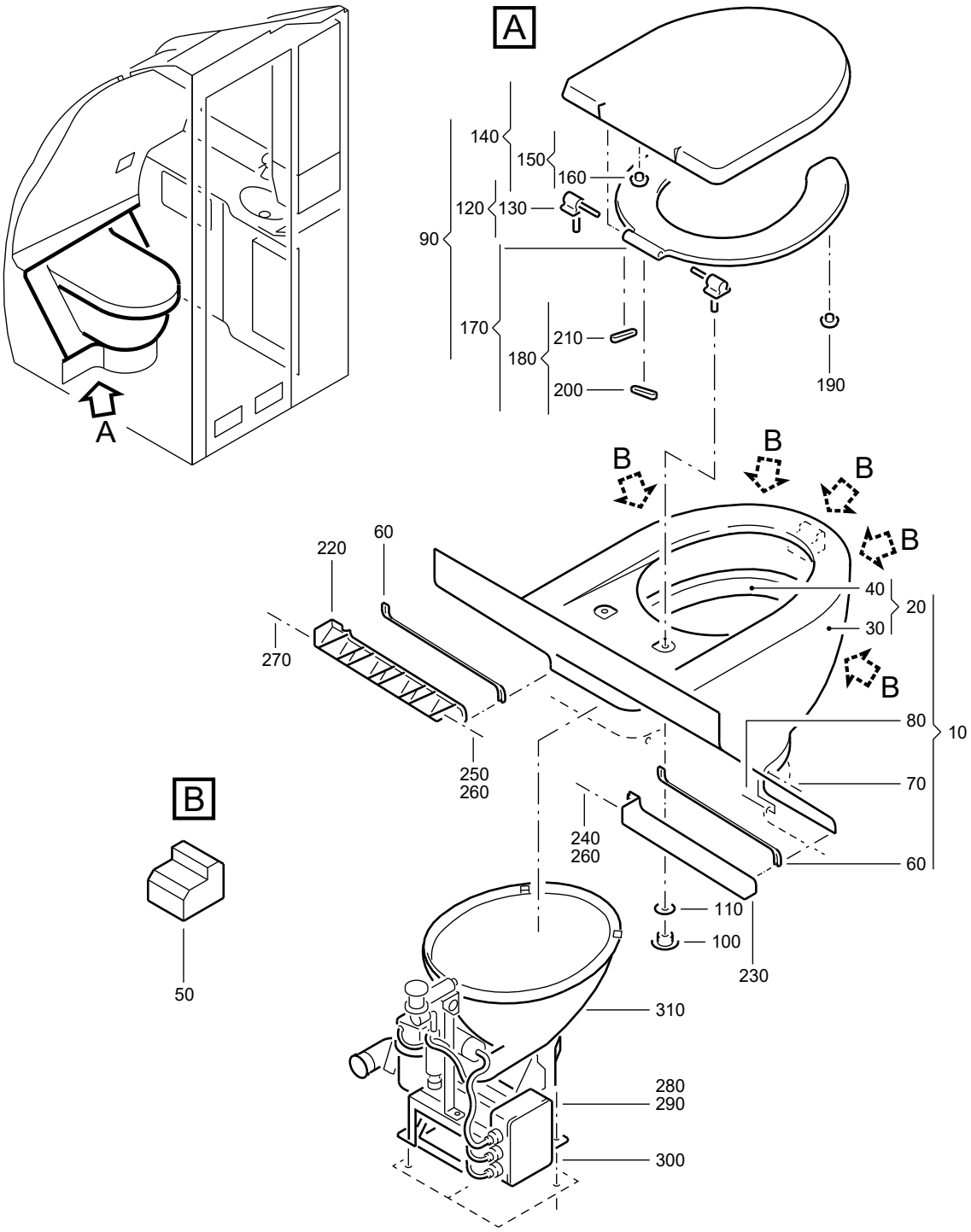

F_PL_254151_12_H_01_00

TOILET UNIT AND TOILET SHROUD
Figure 12H/EN254151SHEET12H01

FIG. ITEM	PART NUMBER	AIRLINE STOCK NUMBER	NOMENCLATURE 1234567		EFF CODE	UNITS PER ASSY
12H						
-001A	D2549030412271		. TOILET UNIT AND TOILET SHROUD used on 080C (25415142L), 080D (25415142N), 080E (25415142S), 080E (25415142T) SEE 25-41-51-42L FOR NHA SEE 25-41-51-42N FOR NHA SEE 25-41-51-42S FOR NHA SEE 25-41-51-42T FOR NHA	NP		RF
-001B	D2549030700871		. TOILET UNIT AND TOILET SHROUD used on 080E (25415142Q), 080D (25415142U) SEE 25-41-51-42Q FOR NHA SEE 25-41-51-42U FOR NHA	NP		RF
-001C	D2549030700671		. TOILET UNIT AND TOILET SHROUD used on 080C (25415142Q) SEE 25-41-51-42Q FOR NHA	NP		RF
-001D	D2549030701871		. TOILET UNIT AND TOILET SHROUD used on 080D (25415142R), 080F (25415142S) SEE 25-41-51-42R FOR NHA SEE 25-41-51-42S FOR NHA	NP		RF
-001E	D2549030702071		. TOILET UNIT AND TOILET SHROUD used on 080F (25415142R) SEE 25-41-51-42R FOR NHA	NP		RF
-001F	D2549030703071		. TOILET UNIT AND TOILET SHROUD used on 080E (25415142U) SEE 25-41-51-42U FOR NHA	NP		RF

- ITEM NOT ILLUSTRATED

FIG. ITEM	PART NUMBER	AIRLINE STOCK NUMBER	NOMENCLATURE 1234567	EFF CODE	UNITS PER ASSY
-001G	D2547161903071		. TOILET UNIT-COVER AND SEAT NP POST SB 25-1742 used on 080H (25415101G) SEE 25-41-51-01G FOR NHA		RF
010A	D2547090004200		. . SHROUD ASSY-TOILET used on 001A		001
-010B	D2547090006000		. . SHROUD ASSY-TOILET used on 001B		001
-010C	D2547090003200		. . SHROUD ASSY-TOILET POST SB 25-1742 used on 001C, 001G		001
-010D	D2547090010200		. . SHROUD ASSY-TOILET used on 001D		001
-010E	D2547090010400		. . SHROUD ASSY-TOILET used on 001E		001
-010F	D2547090010600		. . SHROUD ASSY-TOILET used on 001F		001
020A	D2547090100000		. . . SHROUD-TOILET, COLOURLESS used on 010A, 010B, 010C, 010D, 010E, 010F		001
030A	D2547090120000		. . . . SHROUD-TOILET, COLOURLESS used on 020A		001
040A	D2547090220000		. . . . COVER-RING, COLOURLESS used on 020A		001
050A	D2547090300000		. . . SPACER used on 010A, 010B, 010C, 010D, 010E, 010F		005

- ITEM NOT ILLUSTRATED

FIG. ITEM	PART NUMBER	AIRLINE STOCK NUMBER	NOMENCLATURE 1234567	EFF CODE	UNITS PER ASSY
060A	DAN77-2		. . . SECTION-HOSE USE AS REQUIRED used on 010A, 010B, 010C, 010D, 010E, 010F		AR
070A	MS24693C52		. . SCREW used on 001A, 001B, 001C, 001D, 001E, 001F, 001G		002
080A	NSA5067-08-2		. . NUT used on 001A, 001B, 001C, 001D, 001E, 001F, 001G		002
090A	A425400467-758		. . SEAT ASSY-TOILET used on 001A		001
-090B	A425400467-732		. . SEAT ASSY-TOILET used on 001B		001
-090C	A425400467-704		. . SEAT ASSY-TOILET POST SB 25-1742 used on 001C, 001G		001
-090D	A425400467-788		. . SEAT ASSY-TOILET used on 001D		001
-090E	A425400467-790		. . SEAT ASSY-TOILET used on 001E		001
-090F	A425400467-794		. . SEAT ASSY-TOILET used on 001F		001
100A	SACV11595-200		. . . NUT used on 090A, 090B, 090C, 090D, 090E, 090F		002
110A	SACV11594-200		. . . GASKET used on 090A, 090B, 090C, 090D, 090E, 090F		002

- ITEM NOT ILLUSTRATED

FIG. ITEM	PART NUMBER	AIRLINE STOCK NUMBER	NOMENCLATURE 1234567	EFF CODE	UNITS PER ASSY
120A	A425400466-558		. . . FASTENER used on 090A		002
-120B	A425400466-532		. . . FASTENER used on 090B		002
-120C	A425400466-504		. . . FASTENER used on 090C		002
-120D	A425400466-588		. . . FASTENER used on 090D		002
-120E	A425400466-590		. . . FASTENER used on 090E		002
-120F	A425400466-592		. . . FASTENER used on 090F		002
130A	SACV11596-200		. . . . FASTENER-UNPAINTED used on 120A, 120B, 120C, 120D, 120E, 120F		002
140A	A425400468-558		. . . COVER ASSY-TOILET used on 090A		001
-140B	A425400468-532		. . . COVER ASSY-TOILET used on 090B		001
-140C	A425400468-504		. . . COVER ASSY-TOILET used on 090C		001
-140D	A425400468-590		. . . COVER ASSY-TOILET used on 090D		001
-140E	A425400468-594		. . . COVER ASSY-TOILET used on 090F		001
-140F	A425400468-592		. . . COVER ASSY-TOILET used on 090E		001

- ITEM NOT ILLUSTRATED

FIG. ITEM	PART NUMBER	AIRLINE STOCK NUMBER	NOMENCLATURE 1234567	EFF CODE	UNITS PER ASSY
150A	SACV11604-000		. . . . COVER-TOILET, UNPAINTED used on 140A, 140B, 140C, 140D, 140E, 140F		001
160A	SACV11592-202		. . . . . BUFFER-UNPAINTED used on 150A		004
170A	A425400461-602		. . . SEAT ASSY used on 090A		001
-170B	A425400461-640		. . . SEAT ASSY used on 090B		001
-170C	A425400461-600		. . . SEAT ASSY used on 090C		001
-170D	A425400461-692		. . . SEAT ASSY used on 090D		001
-170E	A425400461-696		. . . SEAT ASSY used on 090F		001
-170F	A425400461-694		. . . SEAT ASSY used on 090E		001
180A	A3-254-0024-152		. . . . SEAT ASSY,UNPAINTED used on 170A, 170B, 170C, 170D, 170E, 170F		001
190A	SACV11592-202		. . . . . BUFFER-UNPAINTED used on 180A		002
200A	SACV11593-212		. . . . . BUFFER used on 180A		008
210A	SACV11593-222		. . . . . BUFFER used on 180A		002
220A	A225400461-540		. . BRACKET-SUPPORT used on 001A		001

- ITEM NOT ILLUSTRATED

FIG. ITEM	PART NUMBER	AIRLINE STOCK NUMBER	NOMENCLATURE 1234567	EFF CODE	UNITS PER ASSY
-220B	A225400461-510		. . BRACKET-SUPPORT used on 001B		001
-220C	A225400461-506		. . BRACKET-SUPPORT used on 001C, 001G		001
-220D	A225400461-566		. . BRACKET-SUPPORT used on 001D		001
-220E	A225400461-568		. . BRACKET-SUPPORT used on 001E		001
-220F	A225400461-570		. . BRACKET-SUPPORT used on 001F		001
230A	A225400461-541		. . BRACKET-SUPPORT used on 001A		001
-230B	A225400461-511		. . BRACKET-SUPPORT used on 001B		001
-230C	A225400461-507		. . BRACKET-SUPPORT used on 001C, 001G		001
-230D	A225400461-567		. . BRACKET-SUPPORT used on 001D		001
-230E	A225400461-569		. . BRACKET-SUPPORT used on 001E		001
-230F	A225400461-571		. . BRACKET-SUPPORT used on 001F		001
240A	NAS1096-2-5		. . SCREW BUY PN NAS1801-08-5 used on 001A, 001B, 001C, 001D, 001E, 001F, 001G		005

- ITEM NOT ILLUSTRATED

FIG. ITEM	PART NUMBER	AIRLINE STOCK NUMBER	NOMENCLATURE 1234567	EFF CODE	UNITS PER ASSY
250A	NAS1096-2-10		. . SCREW BUY PN NAS1801-08-10 used on 001A, 001B, 001C, 001D, 001E, 001F, 001G		005
260A	ASNA0113-40ADL		. . WASHER used on 001A, 001B, 001C, 001D, 001E, 001F, 001G		010
270A	MS21042-08		. . NUT used on 001A, 001B, 001C, 001D, 001E, 001F, 001G		005
280A	NAS564C19		. . BOLT used on 001A, 001B, 001C, 001D, 001E, 001F, 001G		004
290A	MS35338-158		. . WASHER-LOCK used on 001A, 001B, 001C, 001D, 001E, 001F, 001G		004
300A	NSA5307-5C		. . WASHER used on 001A, 001B, 001C, 001D, 001E, 001F, 001G		004
310A	14330-004B1		. . TOILET ASSY used on 001A, 001B, 001C, 001D, 001E, 001F		001
-310B	14320-002B1		. . TOILET ASSY used on 001G		001

- ITEM NOT ILLUSTRATED

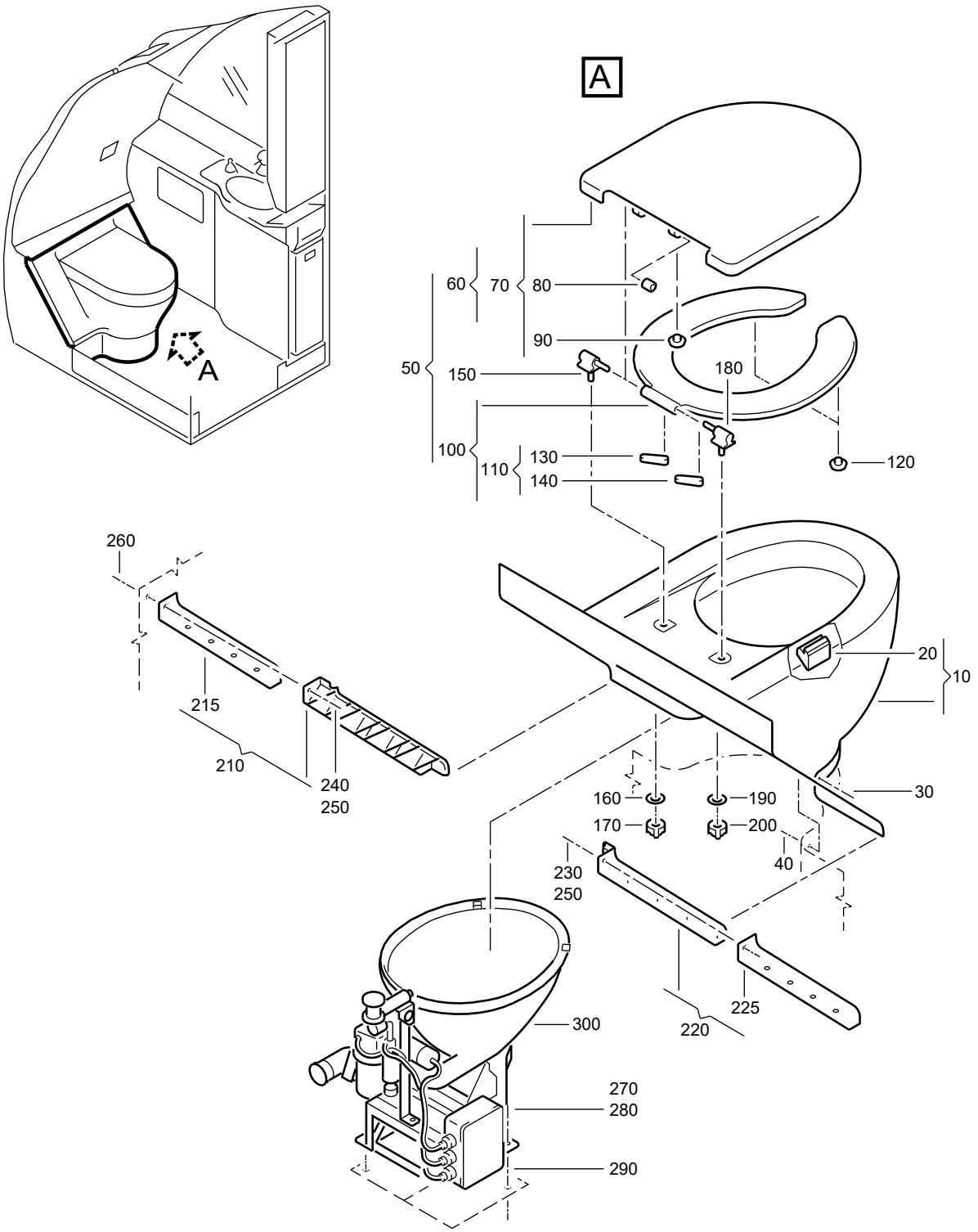

F_PL_254151_12_J_01_01

TOILET UNIT AND TOILET SHROUD
Figure 12J/EN254151SHEET12J01

FIG. ITEM	PART NUMBER	AIRLINE STOCK NUMBER	NOMENCLATURE 1234567	EFF CODE	UNITS PER ASSY
12J -001A	D2549030414671		. TOILET UNIT AND TOILET SHROUD NP used on 080E (25415142N), 080D (25415142S) SEE 25-41-51-42N FOR NHA SEE 25-41-51-42S FOR NHA		RF
010A	D2547090010000		. . SHROUD ASSY-TOILET used on 001A		001
020A	D2547090300000		. . . SPACER used on 010A		005
030A	MS24693C52		. . SCREW used on 001A		002
040A	NSA5067-08-2		. . NUT used on 001A		002
050A	A325400405-810		. . SEAT ASSY-TOILET used on 001A		001
060A	A325400406-610		. . . COVER ASSY-TOILET used on 050A		001
070A	A325400406-006		. . . . COVER-TOILET, UNPAINTED used on 060A		001
080A	A325400405-210		. . . . . BUSHING used on 070A		001
090A	SACV11592-202		. . . . . BUFFER-UNPAINTED used on 070A		004
100A	A425400461-710		. . . SEAT ASSY used on 050A		001
110A	A3-254-0024-100		. . . . SEAT-TOILET,UNPAINTED used on 100A		001

- ITEM NOT ILLUSTRATED

FIG. ITEM	PART NUMBER	AIRLINE STOCK NUMBER	NOMENCLATURE 1234567	EFF CODE	UNITS PER ASSY
120A	SACV11592-202		. . . . . BUFFER-UNPAINTED used on 110A		002
130A	SACV11593-222		. . . . . BUFFER used on 110A		002
140A	SACV11593-212		. . . . . BUFFER used on 110A		008
150A	A325400405-620		. . . DAMPER ASSY used on 050A		001
160A	SACV11594-200		. . . . GASKET used on 150A		001
170A	SACV11595-200		. . . . NUT used on 150A		001
180A	A325400405-720		. . . DAMPER ASSY used on 050A		001
190A	SACV11594-200		. . . . GASKET used on 180A		001
200A	SACV11595-200		. . . . NUT used on 180A		001
210A	A225400461-564		. . BRACKET-SUPPORT used on 001A		001
215A	4020015		. . . SECTION USE AS REQUIRED used on 210A		AR
220A	A225400461-565		. . BRACKET-SUPPORT used on 001A		001
225A	4020015		. . . SECTION USE AS REQUIRED used on 220A		AR

- ITEM NOT ILLUSTRATED

FIG. ITEM	PART NUMBER	AIRLINE STOCK NUMBER	NOMENCLATURE 1234567	EFF CODE	UNITS PER ASSY
230A	NAS1096-2-5		. . SCREW BUY PN NAS1801-08-5 used on 001A		005
240A	NAS1096-2-10		. . SCREW BUY PN NAS1801-08-10 used on 001A		005
250A	ASNA0113-40ADL		. . WASHER used on 001A		010
260A	MS21042-08		. . NUT used on 001A		005
270A	NAS564C19		. . BOLT used on 001A		004
280A	MS35338-158		. . WASHER-LOCK used on 001A		004
290A	NSA5307-5C		. . WASHER used on 001A		004
300A	14330-004B1		. . TOILET ASSY used on 001A		001

- ITEM NOT ILLUSTRATED

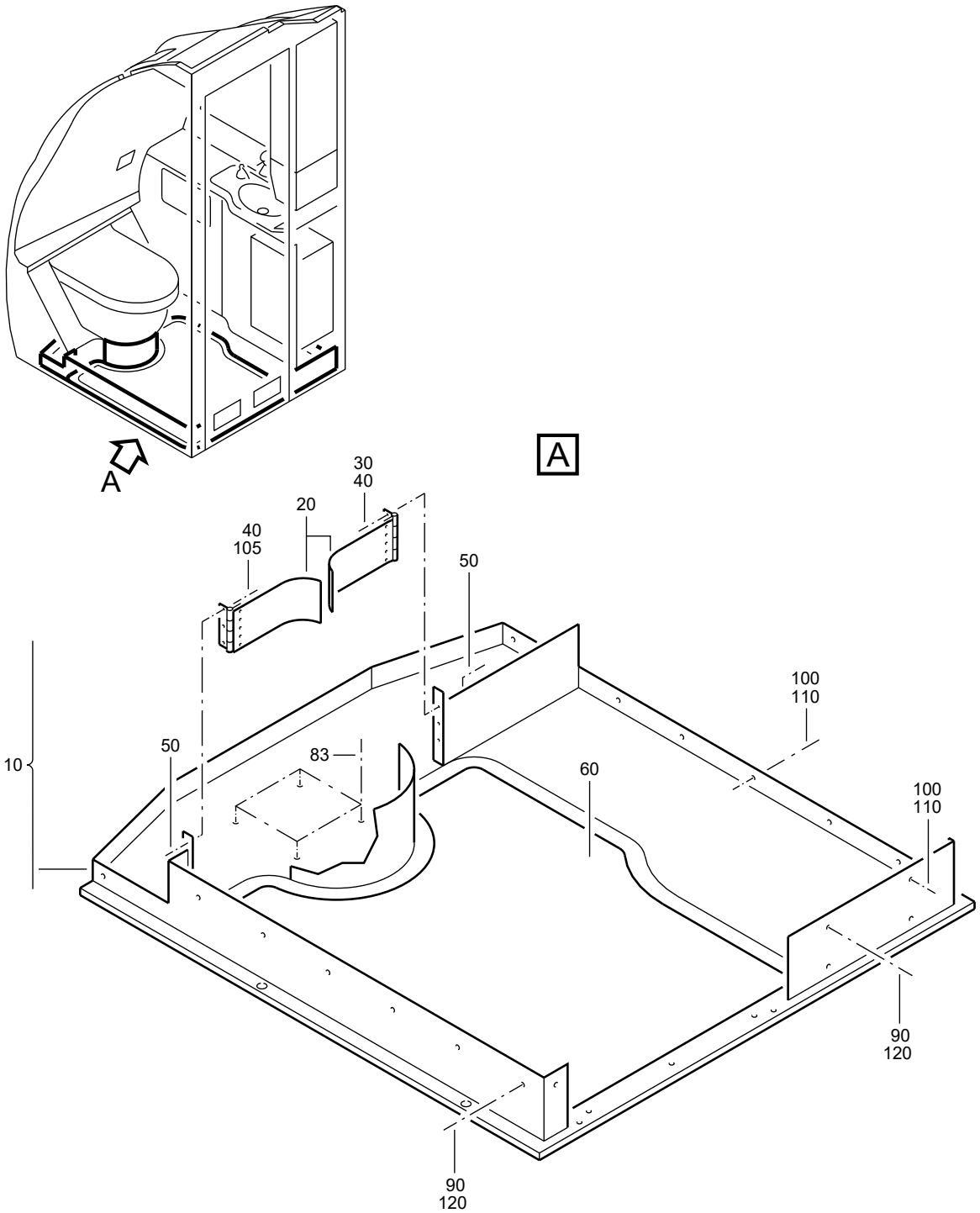

F_PL_254151_13_0_01_00

PAN-FLOOR
Figure 13/EN254151SHEET13001

FIG. ITEM	PART NUMBER	AIRLINE STOCK NUMBER	NOMENCLATURE 1234567	EFF CODE	UNITS PER ASSY
13					
-001A	D2549010500072		. PAN-FLOOR NP used on 090A (254151010), 090D (25415101A), 090B(25415101B), 090B (25415101C), 090A (25415101E), 090B(25415101H) SEE 25-41-51-010 FOR NHA SEE 25-41-51-01A FOR NHA SEE 25-41-51-01B FOR NHA SEE 25-41-51-01C FOR NHA SEE 25-41-51-01E FOR NHA SEE 25-41-51-01H FOR NHA		RF
-001B	D2549020500072		. PAN-FLOOR NP used on 090B (254151010), 090F (25415101A), 090F(25415101B), 090E (25415101D), 090C (25415101E), 090C(25415101F) SEE 25-41-51-010 FOR NHA SEE 25-41-51-01A FOR NHA SEE 25-41-51-01B FOR NHA SEE 25-41-51-01D FOR NHA SEE 25-41-51-01E FOR NHA SEE 25-41-51-01F FOR NHA		RF

- ITEM NOT ILLUSTRATED

FIG. ITEM	PART NUMBER	AIRLINE STOCK NUMBER	NOMENCLATURE 1234567	EFF CODE	UNITS PER ASSY
-001C	D2549020500272		. PAN-FLOOR NP used on 090C (254151010), 090E (25415101A), 090A(25415101B), 090D (25415101C), 090B (25415101D), 090E(25415101E), 090D (25415101F), 090G (25415101G), 090E(25415101H), 090B (25415141B) SEE 25-41-51-010 FOR NHA SEE 25-41-51-01A FOR NHA SEE 25-41-51-01B FOR NHA SEE 25-41-51-01C FOR NHA SEE 25-41-51-01D FOR NHA SEE 25-41-51-01E FOR NHA SEE 25-41-51-01F FOR NHA SEE 25-41-51-01G FOR NHA SEE 25-41-51-01H FOR NHA SEE 25-41-51-41B FOR NHA		RF
-001D	D2549010500472		. PAN-FLOOR NP used on 090D (254151010), 090C (25415101A), 090C(25415101B), 090D (25415101E), 090E (25415101F) SEE 25-41-51-010 FOR NHA SEE 25-41-51-01A FOR NHA SEE 25-41-51-01B FOR NHA SEE 25-41-51-01E FOR NHA SEE 25-41-51-01F FOR NHA		RF

- ITEM NOT ILLUSTRATED

FIG. ITEM	PART NUMBER	AIRLINE STOCK NUMBER	NOMENCLATURE 1234567		EFF CODE	UNITS PER ASSY
-001E	D2549010500672		. PAN-FLOOR used on 090E (254151010), 090B (25415101A), 090A(25415101C), 090D (25415101D), 090F (25415101E), 090B(25415101F), 090B (25415101G), 090F (25415101H), 090K(25415101N) SEE 25-41-51-010 FOR NHA SEE 25-41-51-01A FOR NHA SEE 25-41-51-01C FOR NHA SEE 25-41-51-01D FOR NHA SEE 25-41-51-01E FOR NHA SEE 25-41-51-01F FOR NHA SEE 25-41-51-01G FOR NHA SEE 25-41-51-01H FOR NHA SEE 25-41-51-01N FOR NHA	NP		RF
-001F	D2549010501072		. PAN-FLOOR used on 090F (254151010), 090A (25415101A), 090E(25415101B), 090B (25415101E), 090D (25415101G) SEE 25-41-51-010 FOR NHA SEE 25-41-51-01A FOR NHA SEE 25-41-51-01B FOR NHA SEE 25-41-51-01E FOR NHA SEE 25-41-51-01G FOR NHA	NP		RF
-001G	D2549010505872		. PAN-FLOOR used on 090C (25415101D), 090F (25415101G) SEE 25-41-51-01D FOR NHA SEE 25-41-51-01G FOR NHA	NP		RF
-001H	D2549020600472		. PAN-FLOOR used on 090J (254151410) SEE 25-41-51-410 FOR NHA	NP		RF

- ITEM NOT ILLUSTRATED

FIG. ITEM	PART NUMBER	AIRLINE STOCK NUMBER	NOMENCLATURE 1234567		EFF CODE	UNITS PER ASSY
-001J	D2549020601272		. PAN-FLOOR used on 090G (25415101E) SEE 25-41-51-01E FOR NHA	NP		RF
-001K	D2549020601472		. PAN-FLOOR used on 090H (25415101E), 090A (25415101F), 090E (25415101G), 090D (25415101H), 090G (25415101K) SEE 25-41-51-01E FOR NHA SEE 25-41-51-01F FOR NHA SEE 25-41-51-01G FOR NHA SEE 25-41-51-01H FOR NHA SEE 25-41-51-01K FOR NHA	NP		RF
-001L	D2549030502672		. PAN-FLOOR PRE VSB A2-254-25-131 used on 090H (25415101F) SEE 25-41-51-01F FOR NHA	NP		RF
-001M	D2549020503472		. PAN-FLOOR used on 090G (25415101B), 090J (25415101K) SEE 25-41-51-01B FOR NHA SEE 25-41-51-01K FOR NHA	NP		RF

- ITEM NOT ILLUSTRATED

FIG. ITEM	PART NUMBER	AIRLINE STOCK NUMBER	NOMENCLATURE 1234567	EFF CODE	UNITS PER ASSY
-001N	D2549010502072		. PAN-FLOOR NP used on 090F (25415101C), 090F (25415101F), 090H(25415101G), 090C (25415101H), 090C (25415101J), 090H(25415101K), 090A (25415101L), 090C (25415101Q), 090J(25415101X) SEE 25-41-51-01C FOR NHA SEE 25-41-51-01F FOR NHA SEE 25-41-51-01G FOR NHA SEE 25-41-51-01H FOR NHA SEE 25-41-51-01J FOR NHA SEE 25-41-51-01K FOR NHA SEE 25-41-51-01L FOR NHA SEE 25-41-51-01Q FOR NHA SEE 25-41-51-01X FOR NHA		RF
-001P	D2547161903072		. PAN-FLOOR NP POST SB 25-1742 used on 090K (25415101G) SEE 25-41-51-01G FOR NHA		RF
-001Q	R22540118800672		. PAN-FLOOR NP POST VSB A2-254-25-131 used on 090K (25415101F) SEE 25-41-51-01F FOR NHA		RF
010A	A225401201-512		. . PAN ASSY-FLOOR POST SB 25-1165 used on 001A		001
-010B	A225401201-522		. . PAN ASSY-FLOOR POST SB 25-1165 used on 001B		001
-010C	A225401201-514		. . PAN ASSY-FLOOR POST SB 25-1165 used on 001C		001

- ITEM NOT ILLUSTRATED

FIG. ITEM	PART NUMBER	AIRLINE STOCK NUMBER	NOMENCLATURE 1234567	EFF CODE	UNITS PER ASSY
-010D	A225401201-520		. . PAN ASSY-FLOOR POST SB 25-1165 used on 001D		001
-010E	A225401201-516		. . PAN ASSY-FLOOR POST SB 25-1165 used on 001E		001
-010F	A225401201-518		. . PAN ASSY-FLOOR POST SB 25-1165 used on 001F		001
-010G	A225401201-534		. . PAN ASSY-FLOOR used on 001G		001
-010H	A225401201-532		. . PAN ASSY-FLOOR used on 001H		001
-010J	A225401202-536		. . PAN ASSY-FLOOR POST SB 25-1289 used on 001J		001
-010K	A225401201-538		. . PAN ASSY-FLOOR used on 001K		001
-010L	A225401201-544		. . PAN ASSY-FLOOR used on 001L		001
-010M	A225401202-500		. . PAN ASSY-FLOOR POST SB 25-1289 used on 001M		001
-010N	A225401202-518		. . PAN ASSY-FLOOR POST SB 25-1289 used on 001N		001
-010P	A225401201-554		. . PAN ASSY-FLOOR POST SB 25-1742 used on 001P		001

- ITEM NOT ILLUSTRATED

FIG. ITEM	PART NUMBER	AIRLINE STOCK NUMBER	NOMENCLATURE 1234567	EFF CODE	UNITS PER ASSY
-010Q	A225401201-742		. . PAN ASSY-FLOOR POST VSB A2-254-25-131 used on 001Q		001
020A	A225400202-800		. . . FLAP ASSY used on 010A, 010B, 010C, 010D, 010E, 010F, 010G, 010J, 010K, 010L, 010M, 010N, 010P		002
-020B	A225400202-804		. . . FLAP ASSY used on 010H		002
-020C	A325400202-500		. . . FLAP ASSY used on 010Q		001
030A	NAS1096-2-9		. . . SCREW USAGE RANGE FROM 002 TO 003 BUY PN NAS1801-08-9 used on 010A, 010B, 010C, 010D, 010E, 010F, 010G, 010H, 010J, 010K, 010L, 010M, 010N, 010P		002
040A	NAS1149CN832R		. . . WASHER USAGE RANGE FROM 004 TO 006 used on 010A, 010B, 010C, 010D, 010E, 010F, 010G, 010H, 010J, 010K, 010L, 010M, 010N, 010P		005
050A	MS21042-08		. . . NUT USAGE RANGE FROM 004 TO 006 used on 010A, 010B, 010C, 010D, 010E, 010F, 010G, 010H, 010J, 010K, 010L, 010M, 010N, 010P		005

- ITEM NOT ILLUSTRATED

FIG. ITEM	PART NUMBER	AIRLINE STOCK NUMBER	NOMENCLATURE 1234567	EFF CODE	UNITS PER ASSY
060A	422225020		. . . COVERING-FLOOR, NON-TEXTILE used on 010A, 010M SEE SIL 25-131 FOR DET		001
-060B	78536608		. . . COVERING-FLOOR, NON-TEXTILESHE2522-12N268-065 used on 010B		001
-060C	AIRFL00R97-8-15		. . . COVERING-FLOOR, NON-TEXTILE BUY PN AFR1550R88 used on 010C		001
-060D	115341		. . . COVERING-FLOOR, NON-TEXTILE used on 010D		001
-060E	473675600		. . . COVERING-FLOOR, NON-TEXTILE used on 010E SEE SIL 25-131 FOR DET		001
-060F	473675610		. . . COVERING-FLOOR, NON-TEXTILE used on 010F, 010N		001
-060G	473249801		. . . COVERING-FLOOR, NON-TEXTILE used on 010G		001
-060H	AIRFL00R97-8-3		. . . COVERING-FLOOR, NON-TEXTILE BUY PN AFR1550R97 used on 010H		001
-060J	477678300		. . . COVERING-FLOOR, NON-TEXTILE BUY PN 497B6783 used on 010J SEE SIL 25-131 FOR DET		001

- ITEM NOT ILLUSTRATED

FIG. ITEM	PART NUMBER	AIRLINE STOCK NUMBER	NOMENCLATURE 1234567	EFF CODE	UNITS PER ASSY
-060K	L0NC0IN2-187		. . . COVERING-FLOOR, NON-TEXTILE used on 010K SEE SIL 25-131 FOR DET		001
-060L	S00992-012-00		. . . COVERING-FLOOR, NON-TEXTILE used on 010L SEE SIL 25-131 FOR DET		001
-060M	S011695		. . . COVERING-FLOOR, NON TEXTILE used on 010P		001
-060N	A225400201-002		. . . COVERING-FLOOR, NON TEXTILE POST VSB A2-254-25-131 used on 010Q		001
-063A	ABS5768A500		. . . TAPE-ADHESIVE POST VSB A2-254-25-131 used on 010Q		AR
-066A	FLOORSIL2AI8-15		. . . SEALANT POST VSB A2-254-25-131 FLOORSIL2-AI8-15 used on 010Q		AR
-070A	NAS1835C08		. . . INSERT used on 010A, 010B, 010C, 010D, 010E, 010F, 010G, 010H, 010J, 010K, 010L, 010M, 010N, 010P		003
-080A	NSA5345-08C		. . . INSERT used on 010A, 010B, 010C, 010D, 010E, 010F, 010G, 010H, 010J, 010K, 010L, 010M, 010N, 010P		002

- ITEM NOT ILLUSTRATED

FIG. ITEM	PART NUMBER	AIRLINE STOCK NUMBER	NOMENCLATURE 1234567	EFF CODE	UNITS PER ASSY
083A	3670725-16		. . . INSERT used on 010A, 010B, 010C, 010D, 010E, 010F, 010G, 010H, 010J, 010K, 010L, 010M, 010N, 010P		004
-085A	A225498000-000		. . . INSERT-REPAIR used on 010A, 010B, 010C, 010D, 010E, 010F, 010G, 010H, 010J, 010K, 010L, 010M, 010N, 010P		004
090A	NAS1102-08-7		. . SCREW used on 001B, 001C, 001D, 001E, 001F, 001G, 001H, 001K, 001L, 001M, 001N, 001P, 001Q		009
-090B	NAS1102-08-10		. . SCREW POST SB 25-1640 used on 001A, 001J		009
100A	NAS1801-08-9		. . SCREW POST SB 25-1640 used on 001A, 001B, 001C, 001D, 001E, 001F, 001G, 001H, 001J, 001K, 001L, 001M, 001N, 001P, 001Q		007
105A	NAS1096-2-10		. . SCREW BUY PN NAS1801-08-10 used on 001A, 001B, 001C, 001D, 001E, 001F, 001G, 001H, 001J, 001K, 001L, 001M, 001N, 001P, 001Q		003
110A	ASNA0113-40ADL		. . WASHER used on 001A, 001B, 001C, 001D, 001E, 001F, 001G, 001H, 001J, 001K, 001L, 001M, 001N, 001P, 001Q		007

- ITEM NOT ILLUSTRATED

FIG. ITEM	PART NUMBER	AIRLINE STOCK NUMBER	NOMENCLATURE 1234567	EFF CODE	UNITS PER ASSY
120A	0-123-000700000		. . WASHER POST SB 25-1640 used on 001A, 001J		008

- ITEM NOT ILLUSTRATED

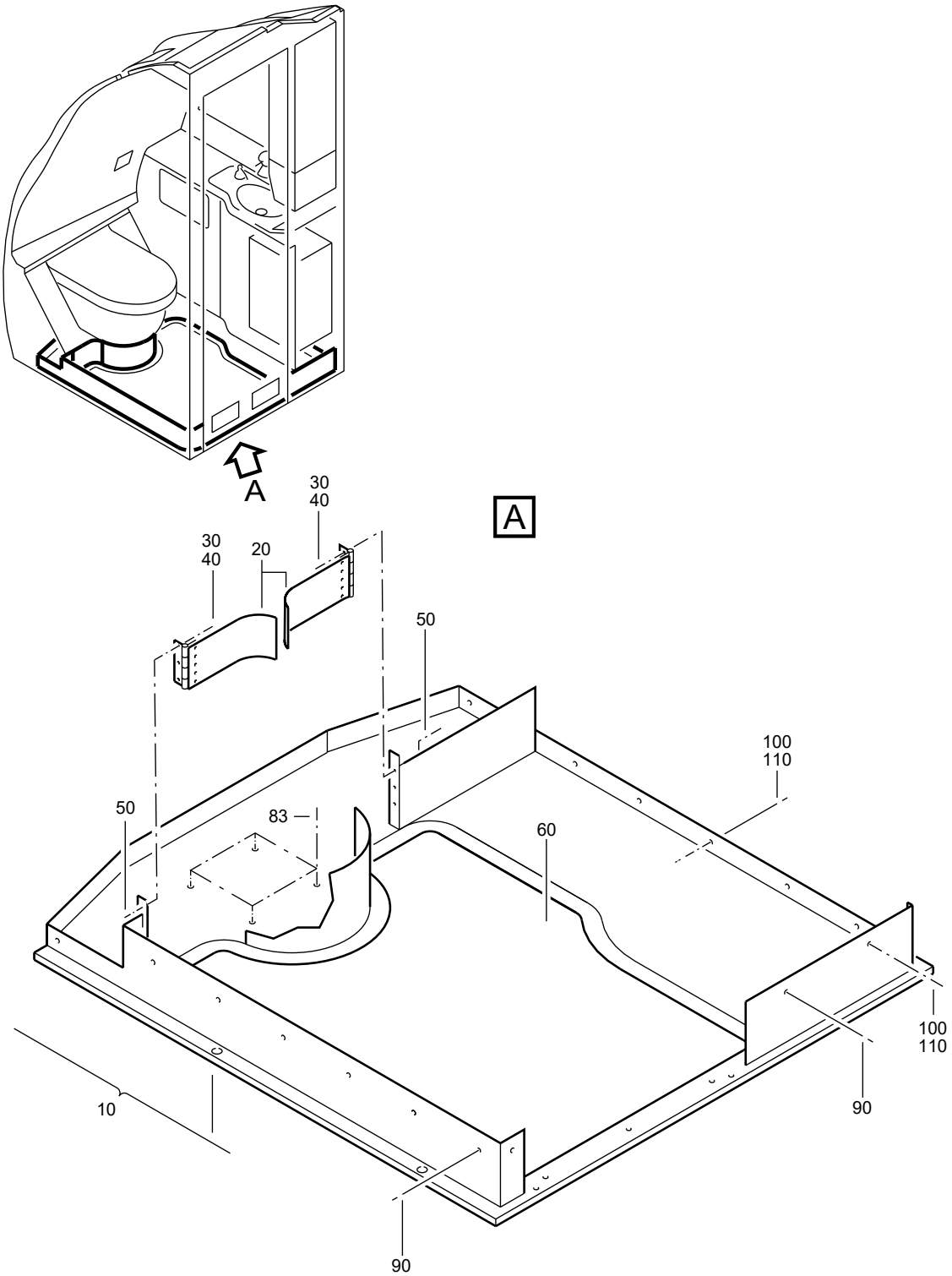

F_PL_254151_13_A_01_00

PAN-FLOOR
Figure 13A/EN254151SHEET13A01

FIG. ITEM	PART NUMBER	AIRLINE STOCK NUMBER	NOMENCLATURE 1234567	EFF CODE	UNITS PER ASSY
13A					
-001A	D2549030500472		. PAN-FLOOR NP used on 090D (25415101B), 090F (25415101D) SEE 25-41-51-01B FOR NHA SEE 25-41-51-01D FOR NHA		RF
-001B	D2549020607072		. PAN-FLOOR NP used on 090E (25415101J), 090A (25415101R) SEE 25-41-51-01J FOR NHA SEE 25-41-51-01R FOR NHA		RF
-001C	D2549030505272		. PAN-FLOOR NP PRE VSB A2-254-25-131 used on 090J (25415101Q), 090C (25415101T), 090B(25415101X), 090C (25415101Z), 090C (25415141D) SEE 25-41-51-01Q FOR NHA SEE 25-41-51-01T FOR NHA SEE 25-41-51-01X FOR NHA SEE 25-41-51-01Z FOR NHA SEE 25-41-51-41D FOR NHA		RF
-001D	D2549020504072		. PAN-FLOOR NP used on 090A (25415101D) SEE 25-41-51-01D FOR NHA		RF
-001E	D2549020602472		. PAN-FLOOR NP used on 090G (25415101F) SEE 25-41-51-01F FOR NHA		RF
-001F	D2549010508072		. PAN-FLOOR NP used on 090A (25415101G) SEE 25-41-51-01G FOR NHA		RF
-001G	D2549020602872		. PAN-FLOOR NP used on 090C (25415101G) SEE 25-41-51-01G FOR NHA		RF

- ITEM NOT ILLUSTRATED

FIG. ITEM	PART NUMBER	AIRLINE STOCK NUMBER	NOMENCLATURE 1234567	EFF CODE	UNITS PER ASSY
-001H	R22540113701272		. PAN-FLOOR NP POST VSB A2-254-25-131 used on 090L (25415101T) SEE 25-41-51-01T FOR NHA		RF
010A	A225401201-524		. . PAN ASSY-FLOOR used on 001A		001
-010B	A225401201-610		. . PAN ASSY-FLOOR POST SB 25-1289 used on 001B		001
-010C	A225401201-664		. . PAN ASSY-FLOOR used on 001C, 001H		001
-010D	A225401201-530		. . PAN ASSY-FLOOR used on 001D		001
-010E	A225401201-540		. . PAN ASSY-FLOOR used on 001E		001
-010F	A225401201-542		. . PAN ASSY-FLOOR used on 001F		001
-010G	A225401201-546		. . PAN ASSY-FLOOR used on 001G		001
-010H	A225401201-740		. . PAN ASSY-FLOOR POST VSB A2-254-25-131 used on 001H		001
020A	A225400202-800		. . . FLAP ASSY used on 010A, 010D, 010E, 010F, 010G		002
-020B	A325400202-500		. . . FLAP used on 010B, 010C, 010H		002

- ITEM NOT ILLUSTRATED

FIG. ITEM	PART NUMBER	AIRLINE STOCK NUMBER	NOMENCLATURE 1234567	EFF CODE	UNITS PER ASSY
030A	NAS1096-2-9		. . . SCREW USE AS REQUIRED USAGE RANGE FROM 4 TO 6 BUY PN NAS1801-08-9 used on 010A, 010B, 010C, 010D, 010E, 010F, 010G, 010H		AR
040A	AN960C8		. . . WASHER USE AS REQUIRED USAGE RANGE FROM 4 TO 6 BUY PN NAS1149CN832R used on 010A, 010D, 010E, 010F, 010G		AR
-040B	NAS1149CN832R		. . . WASHER USE AS REQUIRED used on 010B, 010C, 010H		AR
050A	MS21042-08		. . . NUT USE AS REQUIRED USAGE RANGE FROM 4 TO 6 used on 010A, 010B, 010C, 010D, 010E, 010F, 010G, 010H		AR
060A	469675600		. . . COVERING-FLOOR, NON-TEXTILE used on 010A		001
-060B	477678300		. . . COVERING-FLOOR, NON-TEXTILE BUY PN 497B6783 used on 010B SEE SIL 25-131 FOR DET		001
-060C	S07489-001P2		. . . COVERING-FLOOR, NON-TEXTILE used on 010C		001

- ITEM NOT ILLUSTRATED

FIG. ITEM	PART NUMBER	AIRLINE STOCK NUMBER	NOMENCLATURE 1234567	EFF CODE	UNITS PER ASSY
-060D	92-587-1		. . . COVERING-FLOOR, NON-TEXTILE used on 010D		001
-060E	473649701		. . . COVERING-FLOOR, NON-TEXTILE BUY PN 473C6756 used on 010E		001
-060F	477679800		. . . COVERING-FLOOR, NON-TEXTILE used on 010F SEE SIL 25-131 FOR DET		001
-060G	L0NC0IN2-191		. . . COVERING-FLOOR, NON-TEXTILE used on 010G SEE SIL 25-131 FOR DET		001
-060H	A225400201-002		. . . COVERING-FLOOR, NON-TEXTILE POST VSB A2-254-25-131 used on 010H		001
-063A	ABS5768A500		. . . TAPE-ADHESIVE POST VSB A2-254-25-131 used on 010H		AR
-066A	FLOORSIL2AI8-15		. . . SEALANT POST VSB A2-254-25-131 FLOORSIL2-AI8-15 used on 010H		AR
-070A	NAS1835C08		. . . INSERT used on 010A, 010B, 010C, 010D, 010E, 010F, 010G, 010H		005
-075A	NAS1833C4-500		. . . INSERT used on 010B, 010C, 010H		004

- ITEM NOT ILLUSTRATED

FIG. ITEM	PART NUMBER	AIRLINE STOCK NUMBER	NOMENCLATURE 1234567	EFF CODE	UNITS PER ASSY
-080A	NSA5345-08C		. . . INSERT used on 010A, 010B, 010C, 010D, 010E, 010F, 010G, 010H		002
083A	09321747008		. . . A225498000-000 INSERT selfrom used on 010A, 010B, 010C, 010D, 010E, 010F, 010G, 010H		004
-084A	A225498000-000		. . . INSERT-REPAIR selfrom USE AS REQUIRED FOR ADJUSTMENT ONLY used on 010A, 010B, 010C, 010D, 010E, 010F, 010G, 010H		AR
090A	NAS1102-08-7		. . SCREW used on 001A, 001B, 001C, 001D, 001E, 001F, 001G, 001H		009
100A	NAS1096-2-9		. . SCREW BUY PN NAS1801-08-9 used on 001A, 001B, 001C, 001D, 001E, 001F, 001G, 001H		007
110A	ASNA0113-40ADL		. . WASHER used on 001A, 001B, 001C, 001D, 001E, 001F, 001G, 001H		007

- ITEM NOT ILLUSTRATED

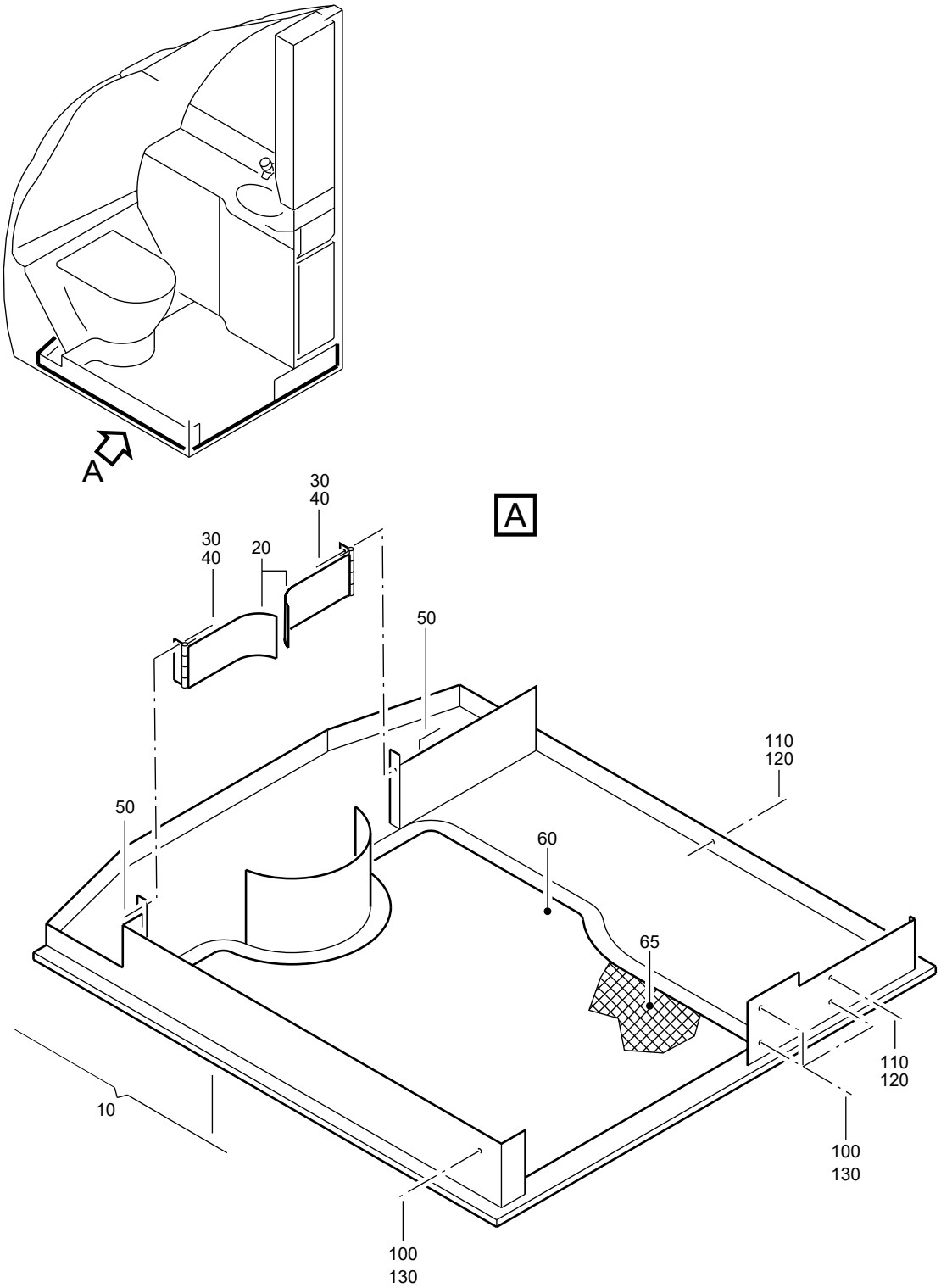

F_PL_254151_13_B_01_01

PAN-FLOOR
Figure 13B/EN254151SHEET13B01

FIG. ITEM	PART NUMBER	AIRLINE STOCK NUMBER	NOMENCLATURE 1234567	EFF CODE	UNITS PER ASSY
13B -001A	D2549030504072		. PAN-FLOOR NP used on 090F (25415101J), 090A (25415101K), 090E(25415101L), 090F (25415101M), 090F (25415101P), 090K(25415101Q), 090D (25415101S), 090A (25415101T), 090C(25415101U), 090J (25415101W), 090H (25415101X), 090A(25415101Y), 090C (254151410), 090D (25415141B), 090K(25415141D), 090F (25415141F), 090F (25415141G), 090L(25415141H), 090J (25415141M), 090J (25415141N), 090A(25415141R) SEE 25-41-51-01J FOR NHA SEE 25-41-51-01K FOR NHA SEE 25-41-51-01L FOR NHA SEE 25-41-51-01M FOR NHA SEE 25-41-51-01P FOR NHA SEE 25-41-51-01Q FOR NHA SEE 25-41-51-01S FOR NHA SEE 25-41-51-01T FOR NHA SEE 25-41-51-01U FOR NHA SEE 25-41-51-01W FOR NHA SEE 25-41-51-01X FOR NHA SEE 25-41-51-01Y FOR NHA SEE 25-41-51-410 FOR NHA SEE 25-41-51-41B FOR NHA SEE 25-41-51-41D FOR NHA SEE 25-41-51-41F FOR NHA SEE 25-41-51-41G FOR NHA SEE 25-41-51-41H FOR NHA SEE 25-41-51-41M FOR NHA SEE 25-41-51-41N FOR NHA SEE 25-41-51-41R FOR NHA		RF

- ITEM NOT ILLUSTRATED

FIG. ITEM	PART NUMBER	AIRLINE STOCK NUMBER	NOMENCLATURE 1234567		EFF CODE	UNITS PER ASSY
-001B	D2549020506272		. PAN-FLOOR used on 090G (25415101J), 090A (25415101P), 090D(25415101Q), 090H (25415101T), 090F (25415101V), 090F(25415101W), 090B (25415101Y), 090G (25415141B), 090J(25415141D), 090H (25415141G) SEE 25-41-51-01J FOR NHA SEE 25-41-51-01P FOR NHA SEE 25-41-51-01Q FOR NHA SEE 25-41-51-01T FOR NHA SEE 25-41-51-01V FOR NHA SEE 25-41-51-01W FOR NHA SEE 25-41-51-01Y FOR NHA SEE 25-41-51-41B FOR NHA SEE 25-41-51-41D FOR NHA SEE 25-41-51-41G FOR NHA	NP		RF
-001C	D2549010509472		. PAN-FLOOR used on 090H (25415101J), 090C (25415101P) SEE 25-41-51-01J FOR NHA SEE 25-41-51-01P FOR NHA	NP		RF
-001D	D2549010510472		. PAN-FLOOR used on 090J (25415101J), 090D (25415141A), 090C(25415141H) SEE 25-41-51-01J FOR NHA SEE 25-41-51-41A FOR NHA SEE 25-41-51-41H FOR NHA	NP		RF

- ITEM NOT ILLUSTRATED

FIG. ITEM	PART NUMBER	AIRLINE STOCK NUMBER	NOMENCLATURE 1234567		EFF CODE	UNITS PER ASSY
-001E	D2549030504672		. PAN-FLOOR used on 090B (25415101K), 090D (25415101L), 090G (25415101U), 090D (25415101X), 090G (25415141C), 090D(25415141F), 090B (25415141H) SEE 25-41-51-01K FOR NHA SEE 25-41-51-01L FOR NHA SEE 25-41-51-01U FOR NHA SEE 25-41-51-01X FOR NHA SEE 25-41-51-41C FOR NHA SEE 25-41-51-41F FOR NHA SEE 25-41-51-41H FOR NHA	NP		RF
-001F	D2549020605272		. PAN-FLOOR used on 090C (25415101K), 090B (25415101N) SEE 25-41-51-01K FOR NHA SEE 25-41-51-01N FOR NHA	NP		RF
-001G	D2549020608672		. PAN-FLOOR used on 090D (25415101K), 090E (25415101M), 090G (25415101Q), 090A (25415141D), 090A (25415141H) SEE 25-41-51-01K FOR NHA SEE 25-41-51-01M FOR NHA SEE 25-41-51-01Q FOR NHA SEE 25-41-51-41D FOR NHA SEE 25-41-51-41H FOR NHA	NP		RF

- ITEM NOT ILLUSTRATED

FIG. ITEM	PART NUMBER	AIRLINE STOCK NUMBER	NOMENCLATURE 1234567		EFF CODE	UNITS PER ASSY
-001H	D2549020605672		. PAN-FLOOR used on 090F (25415101K), 090G (25415101M), 090B (25415101Q), 090D (25415101T), 090G (25415101V), 090H(25415141B), 090H (25415141D), 090J (25415141G), 090G(25415141K), 090C (25415141N) SEE 25-41-51-01K FOR NHA SEE 25-41-51-01M FOR NHA SEE 25-41-51-01Q FOR NHA SEE 25-41-51-01T FOR NHA SEE 25-41-51-01V FOR NHA SEE 25-41-51-41B FOR NHA SEE 25-41-51-41D FOR NHA SEE 25-41-51-41G FOR NHA SEE 25-41-51-41K FOR NHA SEE 25-41-51-41N FOR NHA	NP		RF
-001J	D2549030505872		. PAN-FLOOR used on 090K (25415101J) SEE 25-41-51-01J FOR NHA	NP		RF
-001K	D2549010510272		. PAN-FLOOR used on 090B (25415101R), 090A (25415101W), 090H (25415101Y), 090G (25415141F), 090G (25415141H) SEE 25-41-51-01R FOR NHA SEE 25-41-51-01W FOR NHA SEE 25-41-51-01Y FOR NHA SEE 25-41-51-41F FOR NHA SEE 25-41-51-41H FOR NHA	NP		RF

- ITEM NOT ILLUSTRATED

FIG. ITEM	PART NUMBER	AIRLINE STOCK NUMBER	NOMENCLATURE 1234567	EFF CODE	UNITS PER ASSY
-001L	D2549030506272		. PAN-FLOOR NP used on 090A (25415101J), 090C (25415101L), 090A(25415101M), 090B (25415101P), 090C (25415101S), 090A(25415101U), 090H (25415101Z) SEE 25-41-51-01J FOR NHA SEE 25-41-51-01L FOR NHA SEE 25-41-51-01M FOR NHA SEE 25-41-51-01P FOR NHA SEE 25-41-51-01S FOR NHA SEE 25-41-51-01U FOR NHA SEE 25-41-51-01Z FOR NHA		RF
-001M	D2549010504472		. PAN-FLOOR NP used on 090C (25415101C), 090J (25415101F), 090G(25415101L), 090M (25415141D) SEE 25-41-51-01C FOR NHA SEE 25-41-51-01F FOR NHA SEE 25-41-51-01L FOR NHA SEE 25-41-51-41D FOR NHA		RF
010A	A225401201-602		. . PAN ASSY-FLOOR used on 001A		001
-010B	A225401201-608		. . PAN ASSY-FLOOR used on 001B		001
-010C	A225401201-606		. . PAN ASSY-FLOOR used on 001C		001
-010D	A225401201-616		. . PAN ASSY-FLOOR used on 001D		001
-010E	A225401201-600		. . PAN ASSY-FLOOR used on 001E		001
-010F	A225401201-614		. . PAN ASSY-FLOOR used on 001F		001

- ITEM NOT ILLUSTRATED

FIG. ITEM	PART NUMBER	AIRLINE STOCK NUMBER	NOMENCLATURE 1234567	EFF CODE	UNITS PER ASSY
-010G	A225401201-650		. . PAN ASSY-FLOOR used on 001G		001
-010H	A225401201-620		. . PAN ASSY-FLOOR used on 001H		001
-010J	A225401201-628		. . PAN ASSY-FLOOR used on 001J		001
-010K	A225401201-624		. . PAN ASSY-FLOOR used on 001K		001
-010L	A225401201-604		. . PAN ASSY-FLOOR used on 001L		001
-010M	A225401202-508		. . PAN ASSY-FLOOR POST SB 25-1289 used on 001M		001
020A	A325400202-500		. . . FLAP used on 010A, 010B, 010C, 010D, 010E, 010F, 010H, 010J, 010K, 010L		002
-020B	A225400202-800		. . . FLAP ASSY used on 010G, 010M		002
030A	NAS1096-2-9		. . . SCREW BUY PN NAS1801-08-9 used on 010A, 010B, 010C, 010D, 010E, 010F, 010G, 010H, 010J, 010K, 010L, 010M		004
040A	NAS1149CN832R		. . . WASHER used on 010A, 010B, 010C, 010D, 010E, 010F, 010G, 010H, 010J, 010K, 010L, 010M		004

- ITEM NOT ILLUSTRATED

FIG. ITEM	PART NUMBER	AIRLINE STOCK NUMBER	NOMENCLATURE 1234567	EFF CODE	UNITS PER ASSY
050A	MS21042-08		. . . NUT used on 010A, 010B, 010C, 010D, 010E, 010F, 010G, 010H, 010J, 010K, 010L, 010M		004
060A	AIRFL00R97-8-15		. . . COVERING-FLOOR, NON-TEXTILE USE AS REQUIRED BUY PN AFR1550R88 used on 010A, 010G		AR
-060B	78536608		. . . COVERING-FLOOR, NON-TEXTILE USE AS REQUIRED SHE2522-12N268-065 used on 010B		AR
-060C	115341		. . . COVERING-FLOOR, NON-TEXTILE USE AS REQUIRED used on 010C		AR
-060D	477679800		. . . COVERING-FLOOR, NON-TEXTILE USE AS REQUIRED used on 010D SEE SIL 25-131 FOR DET		AR
-060E	422225020		. . . COVERING-FLOOR, NON-TEXTILE USE AS REQUIRED used on 010E SEE SIL 25-131 FOR DET		AR
-060F	473649701		. . . COVERING-FLOOR, NON-TEXTILE USE AS REQUIRED BUY PN 473C6756 used on 010F		AR

- ITEM NOT ILLUSTRATED

FIG. ITEM	PART NUMBER	AIRLINE STOCK NUMBER	NOMENCLATURE 1234567	EFF CODE	UNITS PER ASSY
-060G	473675600		. . . COVERING-FLOOR, NON-TEXTILE USE AS REQUIRED used on 010L, 010M SEE SIL 25-131 FOR DET		AR
-060H	L0NC0IN2-191		. . . COVERING-FLOOR, NON-TEXTILE USE AS REQUIRED used on 010H SEE SIL 25-131 FOR DET		AR
-060J	496036		. . . COVERING-FLOOR, NON-TEXTILE USE AS REQUIRED used on 010J		AR
-060K	473675610		. . . COVERING-FLOOR, NON-TEXTILE USE AS REQUIRED used on 010K		AR
065A	423210830		. . . TAPE-PVC used on 010E		001
-070A	NAS1835C08		. . . INSERT used on 010A, 010B, 010C, 010D, 010E, 010F, 010G, 010H, 010J, 010K, 010L, 010M		003
-080A	NAS1833C4-370		. . . INSERT used on 010A, 010B, 010C, 010D, 010E, 010F, 010G, 010H, 010J, 010K, 010L		004
-090A	NSA5345-08C		. . . INSERT used on 010A, 010B, 010C, 010D, 010E, 010F, 010G, 010H, 010J, 010K, 010L, 010M		002

- ITEM NOT ILLUSTRATED

FIG. ITEM	PART NUMBER	AIRLINE STOCK NUMBER	NOMENCLATURE 1234567	EFF CODE	UNITS PER ASSY
100A	NAS1102-08-7		. . SCREW used on 001A, 001B, 001C, 001D, 001F, 001G, 001H, 001J, 001K, 001L		008
-100B	NAS1102-08-10		. . SCREW POST SB 25-1289 POST SB 25-1640 used on 001E, 001M		008
110A	NAS1801-08-9		. . SCREW POST SB 25-1640 used on 001A, 001B, 001C, 001D, 001E, 001F, 001G, 001H, 001J, 001K, 001L, 001M		007
120A	ASNA0113-40ADL		. . WASHER used on 001A, 001B, 001C, 001D, 001E, 001F, 001G, 001H, 001J, 001K, 001L, 001M		007
130A	0-123-000700000		. . WASHER POST SB 25-1640 used on 001E, 001M		008

- ITEM NOT ILLUSTRATED

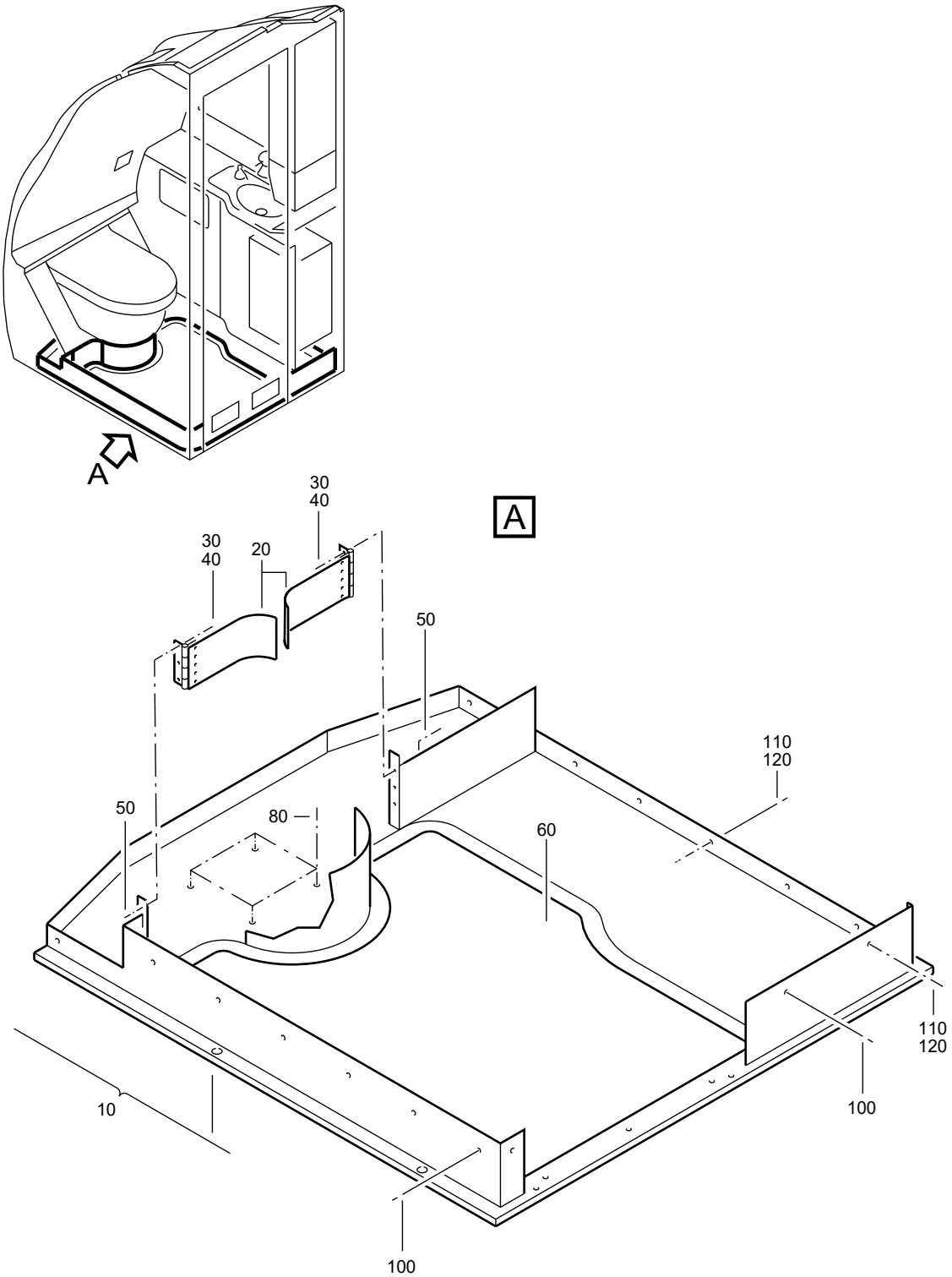

F_PL_254151_13_C_01_00

PAN-FLOOR
Figure 13C/EN254151SHEET13C01

FIG. ITEM	PART NUMBER	AIRLINE STOCK NUMBER	NOMENCLATURE 1234567	EFF CODE	UNITS PER ASSY
13C					
-001A	D2549020606072		. PAN-FLOOR NP used on 090D (25415101N), 090H (25415101P), 090L (25415101W), 090A (25415101X), 090C (25415101Y), 090A(25415141C), 090K (25415141F) SEE 25-41-51-01N FOR NHA SEE 25-41-51-01P FOR NHA SEE 25-41-51-01W FOR NHA SEE 25-41-51-01X FOR NHA SEE 25-41-51-01Y FOR NHA SEE 25-41-51-41C FOR NHA SEE 25-41-51-41F FOR NHA		RF
-001B	D2549020607472		. PAN-FLOOR NP used on 090B (25415101M), 090B (25415101U) SEE 25-41-51-01M FOR NHA SEE 25-41-51-01U FOR NHA		RF

- ITEM NOT ILLUSTRATED

FIG. ITEM	PART NUMBER	AIRLINE STOCK NUMBER	NOMENCLATURE 1234567	EFF CODE	UNITS PER ASSY
-001C	D2549020604872		. PAN-FLOOR NP used on 090B (25415101J), 090E (25415101K), 090B(25415101L), 090C (25415101M), 090E (25415101N), 090D(25415101P), 090G (25415101S), 090B (25415101T), 090J(25415101V), 090C (25415101W), 090L (25415101X), 090D(25415101Y), 090A (25415101Z), 090A (254151410), 090J(25415141B), 090J (25415141C), 090D (25415141D), 090E(25415141F), 090K (25415141G), 090J (25415141J), 090A(25415141K), 090A (25415141L) SEE 25-41-51-01J FOR NHA SEE 25-41-51-01K FOR NHA SEE 25-41-51-01L FOR NHA SEE 25-41-51-01M FOR NHA SEE 25-41-51-01N FOR NHA SEE 25-41-51-01P FOR NHA SEE 25-41-51-01S FOR NHA SEE 25-41-51-01T FOR NHA SEE 25-41-51-01V FOR NHA SEE 25-41-51-01W FOR NHA SEE 25-41-51-01X FOR NHA SEE 25-41-51-01Y FOR NHA SEE 25-41-51-01Z FOR NHA SEE 25-41-51-410 FOR NHA SEE 25-41-51-41B FOR NHA SEE 25-41-51-41C FOR NHA SEE 25-41-51-41D FOR NHA SEE 25-41-51-41F FOR NHA SEE 25-41-51-41G FOR NHA SEE 25-41-51-41J FOR NHA SEE 25-41-51-41K FOR NHA SEE 25-41-51-41L FOR NHA		RF

- ITEM NOT ILLUSTRATED

FIG. ITEM	PART NUMBER	AIRLINE STOCK NUMBER	NOMENCLATURE 1234567	EFF CODE	UNITS PER ASSY
-001D	D2549030507072		. PAN-FLOOR NP used on 090D (25415101M), 090E (25415101Q), 090D (25415101W), 090J (25415101Z), 090C (25415141C), 090C (25415141G), 090F (25415141K), 090B (25415141T) SEE 25-41-51-01M FOR NHA SEE 25-41-51-01Q FOR NHA SEE 25-41-51-01W FOR NHA SEE 25-41-51-01Z FOR NHA SEE 25-41-51-41C FOR NHA SEE 25-41-51-41G FOR NHA SEE 25-41-51-41K FOR NHA SEE 25-41-51-41T FOR NHA		RF
-001E	D2549030511072		. PAN-FLOOR NP used on 090E (25415101U), 090F (25415101X), 090K(254151410), 090H (25415141A), 090J (25415141P), 090A(25415141W) SEE 25-41-51-01U FOR NHA SEE 25-41-51-01X FOR NHA SEE 25-41-51-410 FOR NHA SEE 25-41-51-41A FOR NHA SEE 25-41-51-41P FOR NHA SEE 25-41-51-41W FOR NHA		RF
-001F	D2549020611672		. PAN-FLOOR NP used on 090F (254151410), 090E (25415141A), 090B(25415141C), 090K (25415141P) SEE 25-41-51-410 FOR NHA SEE 25-41-51-41A FOR NHA SEE 25-41-51-41C FOR NHA SEE 25-41-51-41P FOR NHA		RF
-001G	D2549020609872		. PAN-FLOOR NP used on 090G (25415101N) SEE 25-41-51-01N FOR NHA		RF

- ITEM NOT ILLUSTRATED

FIG. ITEM	PART NUMBER	AIRLINE STOCK NUMBER	NOMENCLATURE 1234567	EFF CODE	UNITS PER ASSY
-001H	D2549020610672		. PAN-FLOOR NP PRE VSB A2-254-25-131 used on 090D (25415101J), 090C (25415101N), 090G(25415101P), 090E (25415101S), 090K (25415101T), 090A(25415101V), 090K (25415101X), 090H (254151410), 090A(25415141A), 090B (25415141D), 090C (25415141K), 090B(25415141S) SEE 25-41-51-01J FOR NHA SEE 25-41-51-01N FOR NHA SEE 25-41-51-01P FOR NHA SEE 25-41-51-01S FOR NHA SEE 25-41-51-01T FOR NHA SEE 25-41-51-01V FOR NHA SEE 25-41-51-01X FOR NHA SEE 25-41-51-410 FOR NHA SEE 25-41-51-41A FOR NHA SEE 25-41-51-41D FOR NHA SEE 25-41-51-41K FOR NHA SEE 25-41-51-41S FOR NHA		RF
-001J	D2549020610272		. PAN-FLOOR NP used on 090J (25415101N), 090A (25415101S) SEE 25-41-51-01N FOR NHA SEE 25-41-51-01S FOR NHA		RF

- ITEM NOT ILLUSTRATED

FIG. ITEM	PART NUMBER	AIRLINE STOCK NUMBER	NOMENCLATURE 1234567		EFF CODE	UNITS PER ASSY
-001K	D2549010513872		. PAN-FLOOR used on 090F (25415101Q), 090H (25415101S), 090D (25415101U), 090B (25415101V), 090E (25415101Z), 090A (25415141B) SEE 25-41-51-01Q FOR NHA SEE 25-41-51-01S FOR NHA SEE 25-41-51-01U FOR NHA SEE 25-41-51-01V FOR NHA SEE 25-41-51-01Z FOR NHA SEE 25-41-51-41B FOR NHA	NP		RF
-001L	D2549010513072		. PAN-FLOOR used on 090F (25415101N), 090H (25415101V), 090H (25415141C), 090E (25415141G), 090F (25415141R) SEE 25-41-51-01N FOR NHA SEE 25-41-51-01V FOR NHA SEE 25-41-51-41C FOR NHA SEE 25-41-51-41G FOR NHA SEE 25-41-51-41R FOR NHA	NP		RF
-001M	D2549020610472		. PAN-FLOOR used on 090E (25415101P), 090B (25415101S), 090J(25415101T) SEE 25-41-51-01P FOR NHA SEE 25-41-51-01S FOR NHA SEE 25-41-51-01T FOR NHA	NP		RF

- ITEM NOT ILLUSTRATED

FIG. ITEM	PART NUMBER	AIRLINE STOCK NUMBER	NOMENCLATURE 1234567	EFF CODE	UNITS PER ASSY
-001N	R22540113700072		. PAN-FLOOR NP POST VSB A2-254-25-131 used on 090P (25415101J), 090K (25415101S), 090L (25415101N), 090L (25415101V), 090L (254151410), 090L (25415141A), 090M (25415141S) SEE 25-41-51-01J FOR NHA SEE 25-41-51-01S FOR NHA SEE 25-41-51-01N FOR NHA SEE 25-41-51-01V FOR NHA SEE 25-41-51-410 FOR NHA SEE 25-41-51-41A FOR NHA SEE 25-41-51-41S FOR NHA		RF
010A	A225401201-636		. . PAN ASSY-FLOOR used on 001A		001
-010B	A225401201-634		. . PAN ASSY-FLOOR used on 001B		001
-010C	A225401201-612		. . PAN ASSY-FLOOR used on 001C		001
-010D	A225401201-638		. . PAN ASSY-FLOOR used on 001D		001
-010E	A225401201-668		. . PAN ASSY-FLOOR used on 001E		001
-010F	A225401201-648		. . PAN ASSY-FLOOR used on 001F		001
-010G	A225401201-646		. . PAN ASSY-FLOOR used on 001G		001
-010H	A225401201-618		. . PAN ASSY-FLOOR PRE VSB A2-254-25-131 used on 001H		001

- ITEM NOT ILLUSTRATED

FIG. ITEM	PART NUMBER	AIRLINE STOCK NUMBER	NOMENCLATURE 1234567	EFF CODE	UNITS PER ASSY
-010J	A225401201-654		. . PAN ASSY-FLOOR used on 001J		001
-010K	A225401201-652		. . PAN ASSY-FLOOR used on 001K		001
-010L	A225401201-630		. . PAN ASSY-FLOOR used on 001L		001
-010M	A225401201-656		. . PAN ASSY-FLOOR used on 001M		001
-010N	A225401201-740		. . PAN ASSY-FLOOR POST VSB A2-254-25-131 used on 001N		001
020A	A325400202-500		. . . FLAP used on 010A, 010B, 010C, 010D, 010E, 010F, 010G, 010H, 010J, 010K, 010L, 010M, 010N		002
030A	NAS1096-2-9		. . . SCREW BUY PN NAS1801-08-9 used on 010A, 010B, 010C, 010D, 010E, 010F, 010G, 010H, 010J, 010K, 010L, 010M, 010N		004
040A	NAS1149CN832R		. . . WASHER used on 010A, 010B, 010C, 010D, 010E, 010F, 010G, 010H, 010J, 010K, 010L, 010M, 010N		004
050A	MS21042-08		. . . NUT used on 010A, 010B, 010C, 010D, 010E, 010F, 010G, 010H, 010J, 010K, 010L, 010M, 010N		004
060A	473675600		. . . COVERING-FLOOR, NON-TEXTILE used on 010A SEE SIL 25-131 FOR DET		001

- ITEM NOT ILLUSTRATED

FIG. ITEM	PART NUMBER	AIRLINE STOCK NUMBER	NOMENCLATURE 1234567	EFF CODE	UNITS PER ASSY
-060B	477678900		. . . COVERING-FLOOR, NON-TEXTILE used on 010B SEE SIL 25-131 FOR DET		001
-060C	L0NC0IN2-187		. . . COVERING-FLOOR, NON-TEXTILE used on 010C SEE SIL 25-131 FOR DET		001
-060D	473649800		. . . COVERING-FLOOR, NON-TEXTILE used on 010D, 010L SEE SIL 25-131 FOR DET		001
-060E	440488		. . . COVERING-FLOOR, NON-TEXTILE used on 010M SEE SIL 25-131 FOR DET		001
-060F	473675620		. . . COVERING-FLOOR, NON-TEXTILE used on 010F SEE SIL 25-131 FOR DET		001
-060G	S2701		. . . COVERING-FLOOR, NON-TEXTILE used on 010G		001
-060H	S00992-012-00		. . . COVERING-FLOOR, NON-TEXTILE PRE VSB A2-254-25-131 used on 010H SEE SIL 25-131 FOR DET		001
-060J	440458		. . . COVERING-FLOOR, NON-TEXTILE used on 010J SEE SIL 25-131 FOR DET		001

- ITEM NOT ILLUSTRATED

FIG. ITEM	PART NUMBER	AIRLINE STOCK NUMBER	NOMENCLATURE 1234567	EFF CODE	UNITS PER ASSY
-060K	440485		. . . COVERING-FLOOR, NON-TEXTILE BUY PN 401328 used on 010K SEE SIL 25-131 FOR DET		001
-060L	401365		. . . COVERING-FLOOR, NON-TEXTILE used on 010E SEE SIL 25-131 FOR DET		001
-060M	A225400201-002		. . . COVERING-FLOOR, NON-TEXTILE POST VSB A2-254-25-131 used on 010N		001
-063A	ABS5768A500		. . . TAPE-ADHESIVE POST VSB A2-254-25-131 used on 010N		AR
-066A	FLOORSIL2AI8-15		. . . SEALANT POST VSB A2-254-25-131 FLOORSIL2-AI8-15 used on 010N		AR
-070A	NAS1835C08		. . . INSERT used on 010A, 010B, 010C, 010D, 010E, 010F, 010G, 010H, 010J, 010K, 010L, 010M, 010N		003
080A	NAS1833C4-500		. . . INSERT used on 010A, 010B, 010C, 010D, 010E, 010F, 010G, 010H, 010J, 010K, 010L, 010M, 010N		004
-090A	NSA5345-08C		. . . INSERT used on 010A, 010B, 010C, 010D, 010E, 010F, 010G, 010H, 010J, 010K, 010L, 010M, 010N		002

- ITEM NOT ILLUSTRATED

FIG. ITEM	PART NUMBER	AIRLINE STOCK NUMBER	NOMENCLATURE 1234567	EFF CODE	UNITS PER ASSY
100A	NAS1102-08-7		. . SCREW used on 001A, 001B, 001C, 001D, 001E, 001F, 001G, 001H, 001J, 001K, 001L, 001M, 001N		009
110A	NAS1096-2-9		. . SCREW BUY PN NAS1801-08-9 used on 001A, 001B, 001C, 001D, 001E, 001F, 001G, 001H, 001J, 001K, 001L, 001M, 001N		007
120A	ASNA0113-40ADL		. . WASHER used on 001A, 001B, 001C, 001D, 001E, 001F, 001G, 001H, 001J, 001K, 001L, 001M, 001N		007

- ITEM NOT ILLUSTRATED

THIS PAGE IS INTENTIONALLY LEFT BLANK

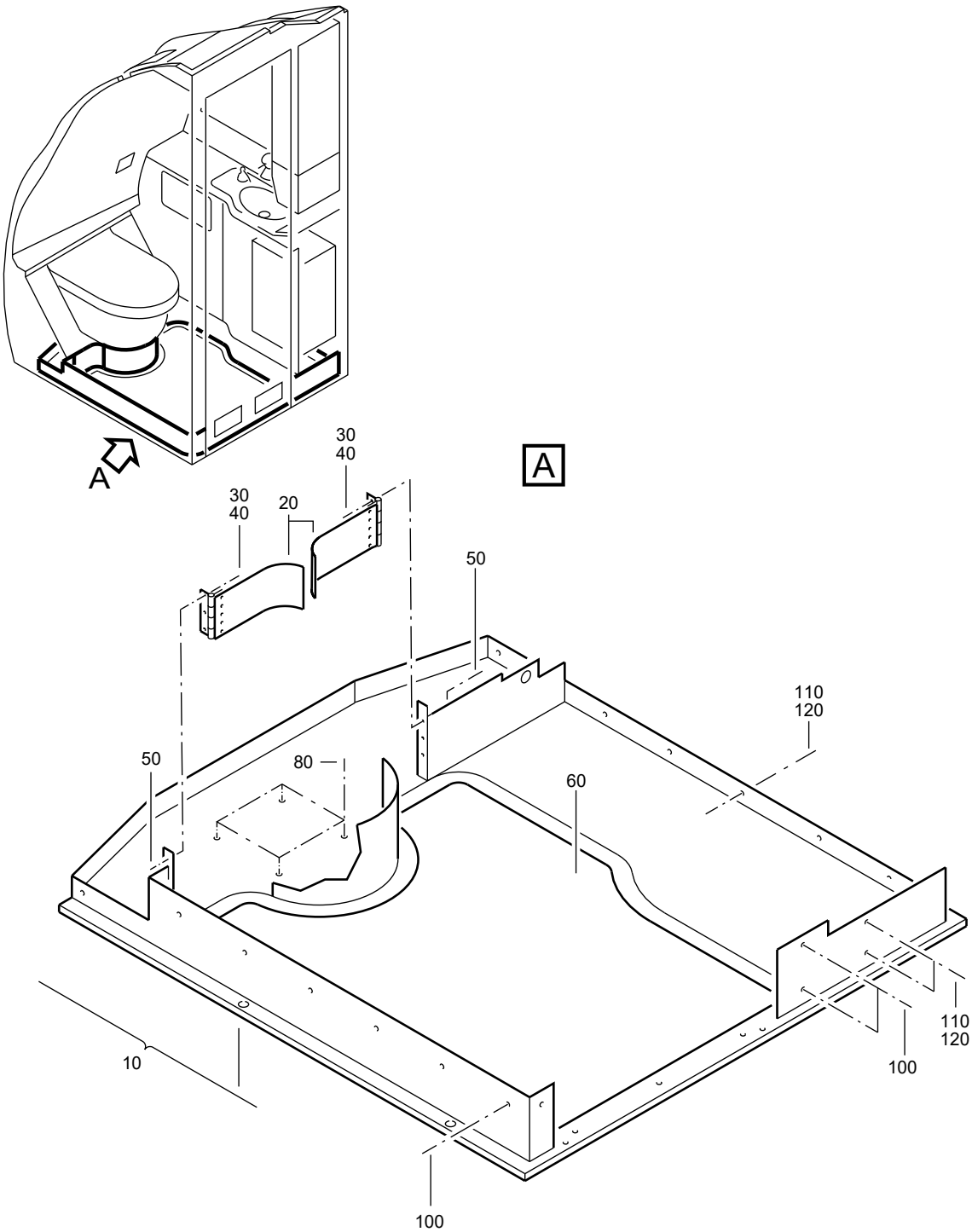

F_PL_254151_13_D_01_00

PAN-FLOOR
Figure 13D/EN254151SHEET13D01

FIG. ITEM	PART NUMBER	AIRLINE STOCK NUMBER	NOMENCLATURE 1234567	EFF CODE	UNITS PER ASSY
13D					
-001A	D2549030514072		. PAN-FLOOR NP used on 090K (25415101V), 090H (25415101W), 090D (25415101Z), 090D (25415141C), 090D (25415141G), 090D(25415141H), 090E (25415141N) SEE 25-41-51-01V FOR NHA SEE 25-41-51-01W FOR NHA SEE 25-41-51-01Z FOR NHA SEE 25-41-51-41C FOR NHA SEE 25-41-51-41G FOR NHA SEE 25-41-51-41H FOR NHA SEE 25-41-51-41N FOR NHA		RF
-001B	D2549010601272		. PAN-FLOOR NP used on 090E (25415101T), 090E (254151410) SEE 25-41-51-01T FOR NHA SEE 25-41-51-410 FOR NHA		RF
-001C	D2549030511272		. PAN-FLOOR NP used on 090F (25415101U), 090D (25415101V), 090J (25415141F), 090K (25415141R) SEE 25-41-51-01U FOR NHA SEE 25-41-51-01V FOR NHA SEE 25-41-51-41F FOR NHA SEE 25-41-51-41R FOR NHA		RF
-001D	D2549020705072		. PAN-FLOOR NP used on 090G (25415101Z) SEE 25-41-51-01Z FOR NHA		RF
-001E	D2549010603472		. PAN-FLOOR NP used on 090B (25415101Z) SEE 25-41-51-01Z FOR NHA		RF

- ITEM NOT ILLUSTRATED

FIG. ITEM	PART NUMBER	AIRLINE STOCK NUMBER	NOMENCLATURE 1234567	EFF CODE	UNITS PER ASSY
-001F	D2549020700072		. PAN-FLOOR NP used on 090E (25415101W), 090E (25415101Y), 090G (254151410) SEE 25-41-51-01W FOR NHA SEE 25-41-51-01Y FOR NHA SEE 25-41-51-410 FOR NHA		RF
-001G	D2549020704272		. PAN-FLOOR NP PRE VSB A2-254-25-130 used on 090K (25415101W), 090G (25415101X), 090B (254151410), 090E (25415141C), 090H (25415141F), 090M (25415141H), 090D (25415141K), 090F (25415141N), 090C(25415141R), 090G (25415141W) SEE 25-41-51-01W FOR NHA SEE 25-41-51-01X FOR NHA SEE 25-41-51-410 FOR NHA SEE 25-41-51-41C FOR NHA SEE 25-41-51-41F FOR NHA SEE 25-41-51-41H FOR NHA SEE 25-41-51-41K FOR NHA SEE 25-41-51-41N FOR NHA SEE 25-41-51-41R FOR NHA SEE 25-41-51-41W FOR NHA		RF

- ITEM NOT ILLUSTRATED

FIG. ITEM	PART NUMBER	AIRLINE STOCK NUMBER	NOMENCLATURE 1234567	EFF CODE	UNITS PER ASSY
-001H	D2549020702272		. PAN-FLOOR NP PRE VSB A2-254-25-039 used on 090F (25415101T), 090E (25415101V), 090J(25415101Y), 090K (25415141A), 090K (25415141C), 090H(25415141H), 090H (25415141J), 090E (25415141K), 090A(25415141M), 100A (25415141Q), 090L (25415141R), 090C(25415141S), 090A (25415141U), 090J (25415141W) SEE 25-41-51-01T FOR NHA SEE 25-41-51-01V FOR NHA SEE 25-41-51-01Y FOR NHA SEE 25-41-51-41A FOR NHA SEE 25-41-51-41C FOR NHA SEE 25-41-51-41H FOR NHA SEE 25-41-51-41J FOR NHA SEE 25-41-51-41K FOR NHA SEE 25-41-51-41M FOR NHA SEE 25-41-51-41Q FOR NHA SEE 25-41-51-41R FOR NHA SEE 25-41-51-41S FOR NHA SEE 25-41-51-41U FOR NHA SEE 25-41-51-41W FOR NHA		RF
-001J	D2549030512472		. PAN-FLOOR NP used on 090E (25415101X) SEE 25-41-51-01X FOR NHA		RF
-001K	D2549010513672		. PAN-FLOOR NP used on 090E (25415141B) SEE 25-41-51-41B FOR NHA		RF
-001L	D2549020714072		. PAN-FLOOR NP used on 090H (25415141V), 090F (25415141Y) SEE 25-41-51-41V FOR NHA SEE 25-41-51-41Y FOR NHA		RF

- ITEM NOT ILLUSTRATED

FIG. ITEM	PART NUMBER	AIRLINE STOCK NUMBER	NOMENCLATURE 1234567	EFF CODE	UNITS PER ASSY
-001M	R22540113600072		. PAN-FLOOR NP POST VSB A2-254-25-039 used on 090P (25415141H) SEE 25-41-51-41H FOR NHA		RF
-001N	R22540119604672		. PAN-FLOOR NP POST VSB A2-254-25-130 used on 090M (254151410), 090M (25415141K), 090M (25415141N), 090M (25415141R), 090K (25415141W) SEE 25-41-51-410 FOR NHA SEE 25-41-51-41K FOR NHA SEE 25-41-51-41N FOR NHA SEE 25-41-51-41R FOR NHA SEE 25-41-51-41W FOR NHA		RF
010A	A225401201-666		. . PAN ASSY-FLOOR used on 001A		001
-010B	A225401201-658		. . PAN ASSY-FLOOR used on 001B		001
-010C	A225401201-660		. . PAN ASSY-FLOOR used on 001C		001
-010D	A225401201-662		. . PAN ASSY-FLOOR used on 001D		001
-010E	A225401201-678		. . PAN ASSY-FLOOR used on 001E		001
-010F	A225401201-670		. . PAN ASSY-FLOOR used on 001F		001
-010G	A225401201-672		. . PAN ASSY-FLOOR used on 001G		001
-010H	A225401201-680		. . PAN ASSY-FLOOR PRE VSB A2-254-25-039 used on 001H		001

- ITEM NOT ILLUSTRATED

FIG. ITEM	PART NUMBER	AIRLINE STOCK NUMBER	NOMENCLATURE 1234567	EFF CODE	UNITS PER ASSY
-010J	A225401201-674		. . PAN ASSY-FLOOR used on 001J		001
-010K	A225401201-640		. . PAN ASSY-FLOOR used on 001K		001
-010L	A225401202-680		. . PAN ASSY-FLOOR used on 001H, 001L, 001M		001
-010M	A225401201-736		. . PAN ASSY-FLOOR POST VSB A2-254-25-039 used on 001M		001
-010N	A225401201-730		. . PAN ASSY-FLOOR POST VSB A2-254-25-130 used on 001N		001
020A	A325400202-500		. . . FLAP used on 010A, 010B, 010C, 010E, 010F, 010G, 010H, 010J, 010K, 010M, 010N		002
-020B	A325400202-510		. . . FLAP used on 010D		002
030A	NAS1096-2-9		. . . SCREW BUY PN NAS1801-08-9 used on 010A, 010B, 010C, 010D, 010E, 010F, 010G, 010H, 010J, 010K, 010L, 010M, 010N		004
040A	NAS1149CN832R		. . . WASHER used on 010A, 010B, 010C, 010D, 010E, 010F, 010G, 010H, 010J, 010K, 010L, 010M, 010N		004
050A	MS21042-08		. . . NUT used on 010A, 010B, 010C, 010D, 010E, 010F, 010G, 010H, 010J, 010K, 010L, 010M, 010N		004

- ITEM NOT ILLUSTRATED

FIG. ITEM	PART NUMBER	AIRLINE STOCK NUMBER	NOMENCLATURE 1234567	EFF CODE	UNITS PER ASSY
060A	401365		. . . COVERING-FLOOR, NON-TEXTILE used on 010A SEE SIL 25-131 FOR DET		001
-060B	477679800		. . . COVERING-FLOOR, NON-TEXTILE used on 010B SEE SIL 25-131 FOR DET		001
-060C	477678300		. . . COVERING-FLOOR, NON-TEXTILE BUY PN 497B6783 used on 010C SEE SIL 25-131 FOR DET		001
-060D	AIRFL00R97-8-8		. . . COVERING-FLOOR, NON-TEXTILE used on 010D		001
-060E	477649000		. . . COVERING-FLOOR, NON-TEXTILE used on 010E SEE SIL 25-131 FOR DET		001
-060F	FL01-0274Y3V1		. . . COVERING-FLOOR, NON-TEXTILE PRE VSB A2-254-25-130 used on 010G		001
-060G	473675620		. . . COVERING-FLOOR, NON-TEXTILE PRE VSB A2-254-25-039 used on 010H, 010L SEE SIL 25-131 FOR DET		001
-060H	401222		. . . COVERING-FLOOR, NON TEXTILE used on 010J SEE SIL 25-131 FOR DET		001

- ITEM NOT ILLUSTRATED

FIG. ITEM	PART NUMBER	AIRLINE STOCK NUMBER	NOMENCLATURE 1234567	EFF CODE	UNITS PER ASSY
-060J	440458SK		. . . COVERING-FLOOR, NON-TEXTILE440458SKVNPLL75050 used on 010F		001
-060K	440488		. . . COVERING-FLOOR, NON-TEXTILE used on 010K SEE SIL 25-131 FOR DET		001
-060L	A225400201-000		. . . COVERING-FLOOR, NON-TEXTILE POST VSB A2-254-25-039 used on 010M SEE SIL 25-131 FOR DET		001
-060M	A225400201-004		. . . COVERING-FLOOR, NON-TEXTILE POST VSB A2-254-25-130 used on 010N		001
-062A	FLOORSIL2AI8-8		. . . SEALANT POST VSB A2-254-25-130 used on 010N FLOORSIL2-AI8-8		AR
-065A	ABS5768A500		. . . TAPE-ADHESIVE POST VSB A2-254-25-130 used on 010N SCOTCH 950 NBC/ABS 5768A-500		AR
-070A	NAS1835C08		. . . INSERT used on 010A, 010B, 010C, 010D, 010E, 010F, 010G, 010H, 010J, 010K, 010L, 010M, 010N		003
080A	NAS1833C4-500		. . . INSERT used on 010A, 010B, 010C, 010D, 010E, 010F, 010G, 010H, 010J, 010K, 010L, 010M, 010N		004

- ITEM NOT ILLUSTRATED

FIG. ITEM	PART NUMBER	AIRLINE STOCK NUMBER	NOMENCLATURE 1234567	EFF CODE	UNITS PER ASSY
-090A	NSA5345-08C		. . . INSERT used on 010A, 010B, 010C, 010D, 010E, 010F, 010G, 010H, 010J, 010K, 010L, 010M, 010N		002
100A	NAS1102-08-7		. . SCREW used on 001A, 001B, 001C, 001D, 001E, 001F, 001G, 001H, 001J, 001K, 001L, 001M, 001N		008
110A	NAS1096-2-9		. . SCREW BUY PN NAS1801-08-9 used on 001A, 001B, 001C, 001D, 001E, 001F, 001G, 001H, 001J, 001K, 001L, 001M, 001N		007
120A	ASNA0113-40ADL		. . WASHER used on 001A, 001B, 001C, 001D, 001E, 001F, 001G, 001H, 001J, 001K, 001L, 001M, 001N		007

- ITEM NOT ILLUSTRATED

THIS PAGE IS INTENTIONALLY LEFT BLANK

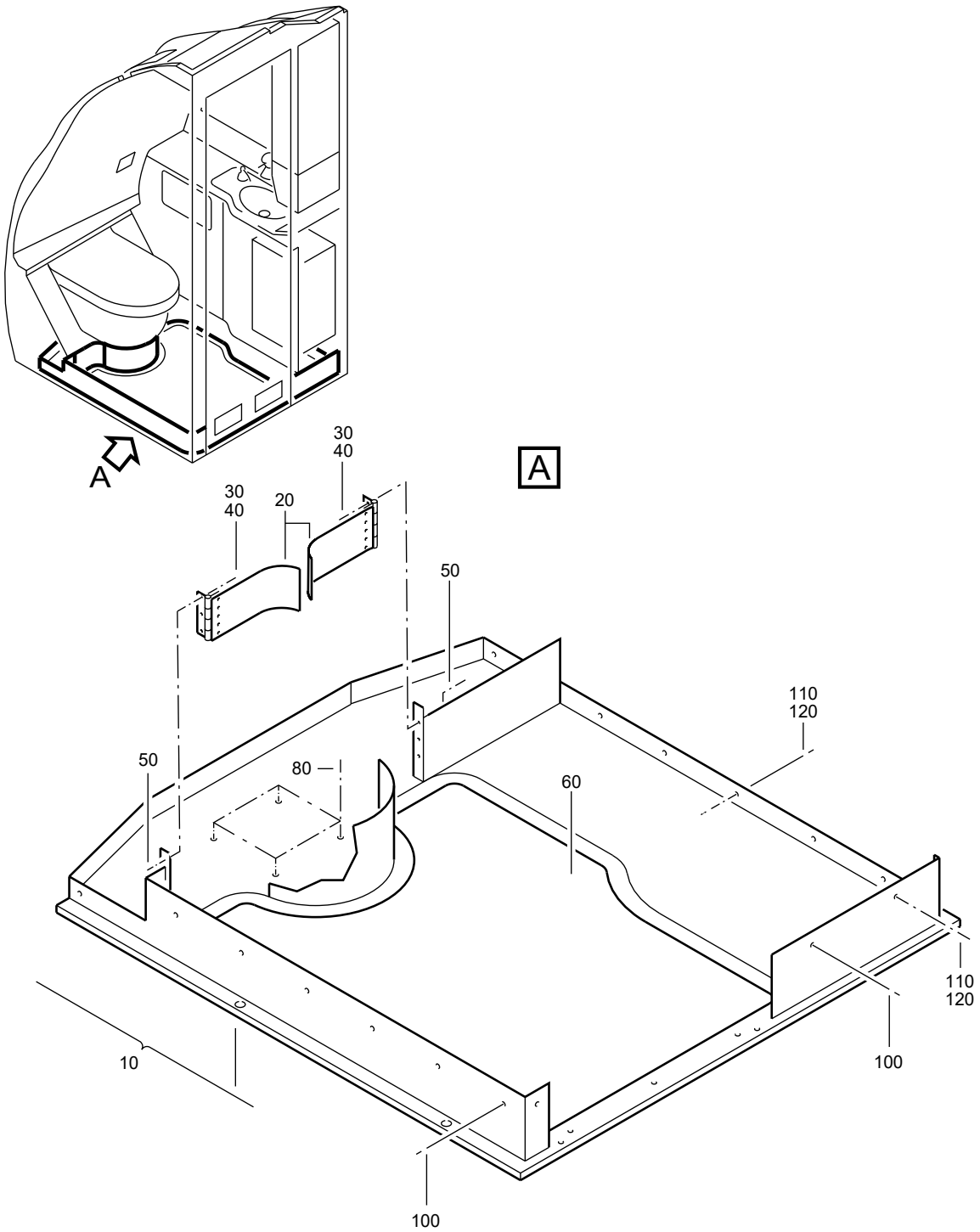

F_PL_254151_13_E_01_00

PAN-FLOOR
Figure 13E/EN254151SHEET13E01

FIG. ITEM	PART NUMBER	AIRLINE STOCK NUMBER	NOMENCLATURE 1234567	EFF CODE	UNITS PER ASSY
13E					
-001A	D2549020509672		. PAN-FLOOR NP used on 090F (25415141J) SEE 25-41-51-41J FOR NHA		RF
-001B	D2549020710072		. PAN-FLOOR NP used on 090B (25415141A) SEE 25-41-51-41A FOR NHA		RF
-001C	D2549020710872		. PAN-FLOOR NP used on 090C (25415141A), 090K (25415141K) SEE 25-41-51-41A FOR NHA SEE 25-41-51-41K FOR NHA		RF
-001D	D2549010605672		. PAN-FLOOR NP used on 090G (25415141A), 090F (25415141D), 090A (25415141P), 090D (25415141Z) SEE 25-41-51-41A FOR NHA SEE 25-41-51-41D FOR NHA SEE 25-41-51-41P FOR NHA SEE 25-41-51-41Z FOR NHA		RF
-001E	D2549030603072		. PAN-FLOOR NP used on 090J (25415141A), 090B (25415141F), 090E(25415141H), 090C (25415141J) SEE 25-41-51-41A FOR NHA SEE 25-41-51-41F FOR NHA SEE 25-41-51-41H FOR NHA SEE 25-41-51-41J FOR NHA		RF
-001F	D2549020713472		. PAN-FLOOR NP used on 090C (25415141F) SEE 25-41-51-41F FOR NHA		RF

- ITEM NOT ILLUSTRATED

FIG. ITEM	PART NUMBER	AIRLINE STOCK NUMBER	NOMENCLATURE 1234567		EFF CODE	UNITS PER ASSY
-001G	D2549020713672		. PAN-FLOOR PRE VSB A2-254-25-131 used on 090F (25415141A), 090D (25415141J), 090B(25415141P), 090G (25415141S), 090E (25415141V) SEE 25-41-51-41A FOR NHA SEE 25-41-51-41J FOR NHA SEE 25-41-51-41P FOR NHA SEE 25-41-51-41S FOR NHA SEE 25-41-51-41V FOR NHA	NP		RF
-001H	D2549030604272		. PAN-FLOOR used on 090A (25415141G), 090E (25415141J), 090C (25415141L) SEE 25-41-51-41G FOR NHA SEE 25-41-51-41J FOR NHA SEE 25-41-51-41L FOR NHA	NP		RF
-001J	D2549030606072		. PAN-FLOOR used on 090K (25415141H), 090A (25415141J), 090D (25415141R), 090E (25415141W) SEE 25-41-51-41H FOR NHA SEE 25-41-51-41J FOR NHA SEE 25-41-51-41R FOR NHA SEE 25-41-51-41W FOR NHA	NP		RF
-001K	D2549030608872		. PAN-FLOOR used on 090F (25415141H) SEE 25-41-51-41H FOR NHA	NP		RF
-001L	D2549010605272		. PAN-FLOOR used on 090B (25415141K), 090G (25415141R) SEE 25-41-51-41K FOR NHA SEE 25-41-51-41R FOR NHA	NP		RF

- ITEM NOT ILLUSTRATED

FIG. ITEM	PART NUMBER	AIRLINE STOCK NUMBER	NOMENCLATURE 1234567	EFF CODE	UNITS PER ASSY
-001M	R22540160500272		. PAN-FLOOR NP POST VSB A2-254-25-131 used on 090M (25415141P) SEE 25-41-51-41P FOR NHA		RF
010A	A225401201-700		. . PAN ASSY-FLOOR used on 001A		001
-010B	A225401201-686		. . PAN ASSY-FLOOR used on 001B		001
-010C	A225401201-682		. . PAN ASSY-FLOOR used on 001C		001
-010D	A225401201-684		. . PAN ASSY-FLOOR used on 001D		001
-010E	A225401201-688		. . PAN ASSY-FLOOR used on 001E		001
-010F	A225401201-690		. . PAN ASSY-FLOOR used on 001F		001
-010G	A225401201-692		. . PAN ASSY-FLOOR PRE VSB A2-254-25-131 used on 001G		001
-010H	A225401201-694		. . PAN ASSY-FLOOR used on 001H		001
-010J	A225401201-800		. . PAN ASSY-FLOOR used on 001J		001
-010K	A225401201-698		. . PAN ASSY-FLOOR used on 001K		001
-010L	A225401201-702		. . PAN ASSY-FLOOR used on 001L		001
-010M	A225401201-740		. . PAN ASSY-FLOOR POST VSB A2-254-25-131 used on 001M		001

- ITEM NOT ILLUSTRATED

FIG. ITEM	PART NUMBER	AIRLINE STOCK NUMBER	NOMENCLATURE 1234567	EFF CODE	UNITS PER ASSY
020A	A325400202-500		. . . FLAP used on 010A, 010B, 010C, 010E, 010F, 010G, 010H, 010K, 010L, 010M		002
-020B	A325400202-506		. . . FLAP used on 010D		002
-020C	A325400202-518		. . . FLAP used on 010J		002
030A	NAS1096-2-9		. . . SCREW BUY PN NAS1801-08-9 used on 010A, 010B, 010C, 010D, 010E, 010F, 010G, 010H, 010J, 010K, 010L, 010M		004
040A	NAS1149CN832R		. . . WASHER used on 010A, 010B, 010C, 010D, 010E, 010F, 010G, 010H, 010J, 010K, 010L, 010M		004
050A	MS21042-08		. . . NUT used on 010A, 010B, 010C, 010D, 010E, 010F, 010G, 010H, 010J, 010K, 010L, 010M		004
060A	473249801		. . . COVERING-FLOOR, NON-TEXTILE used on 010A		001
-060B	490679710		. . . COVERING-FLOOR, NON-TEXTILE used on 010B		001
-060C	L0NC0IN2-187		. . . COVERING-FLOOR, NON-TEXTILE used on 010C SEE SIL 25-131 FOR DET		001

- ITEM NOT ILLUSTRATED

FIG. ITEM	PART NUMBER	AIRLINE STOCK NUMBER	NOMENCLATURE 1234567	EFF CODE	UNITS PER ASSY
-060D	S3595		. . . COVERING-FLOOR, NON-TEXTILE used on 010D		001
-060E	440499		. . . COVERING-FLOOR, NON-TEXTILE BUY PN 401328 used on 010E SEE SIL 25-131 FOR DET		001
-060F	S2701		. . . COVERING-FLOOR, NON-TEXTILE used on 010F		001
-060G	440501		. . . COVERING-FLOOR, NON-TEXTILE PRE VSB A2-254-25-131 used on 010G SEE SIL 25-131 FOR DET		001
-060H	AIRFL00R97-8-15		. . . COVERING-FLOOR, NON-TEXTILE BUY PN AFR1550R88 used on 010H		001
-060J	L0NC0IN2-193		. . . COVERING ASSY-FLOOR, NON TEXTILE used on 010J SEE SIL 25-131 FOR DET		001
-060K	SHE2537-32-060D		. . . COVERING-FLOOR, NON TEXTILE used on 010K		001
-060L	S07489-001P2		. . . COVERING-FLOOR, NON-TEXTILE used on 010L		001

- ITEM NOT ILLUSTRATED

FIG. ITEM	PART NUMBER	AIRLINE STOCK NUMBER	NOMENCLATURE 1234567	EFF CODE	UNITS PER ASSY
-060M	A225400201-002		. . . COVERING-FLOOR, NON-TEXTILE POST VSB A2-254-25-131 used on 010M		001
-063A	ABS5768A500		. . . TAPE-ADHESIVE POST VSB A2-254-25-131 used on 010M		AR
-066A	FLOORSIL2AI8-15		. . . SEALANT POST VSB A2-254-25-131 FLOORSIL2-AI8-15 used on 010M		AR
-070A	NAS1835C08		. . . INSERT used on 010A, 010B, 010C, 010D, 010E, 010F, 010G, 010H, 010J, 010K, 010L, 010M		003
080A	NAS1833C4-500		. . . INSERT used on 010A, 010B, 010C, 010D, 010E, 010F, 010G, 010H, 010J, 010K, 010L, 010M		004
-090A	NSA5345-08C		. . . INSERT used on 010A, 010B, 010C, 010D, 010E, 010F, 010G, 010H, 010J, 010K, 010L, 010M		002
100A	NAS1102-08-7		. . SCREW used on 001A, 001B, 001C, 001D, 001E, 001F, 001G, 001H, 001J, 001K, 001L, 001M		009
110A	NAS1096-2-9		. . SCREW BUY PN NAS1801-08-9 used on 001A, 001B, 001C, 001D, 001E, 001F, 001G, 001H, 001J, 001K, 001L, 001M		007

- ITEM NOT ILLUSTRATED

FIG. ITEM	PART NUMBER	AIRLINE STOCK NUMBER	NOMENCLATURE 1234567	EFF CODE	UNITS PER ASSY
120A	ASNA0113-40ADL		. . WASHER used on 001A, 001B, 001C, 001D, 001E, 001F, 001G, 001H, 001J, 001K, 001L, 001M		007

- ITEM NOT ILLUSTRATED

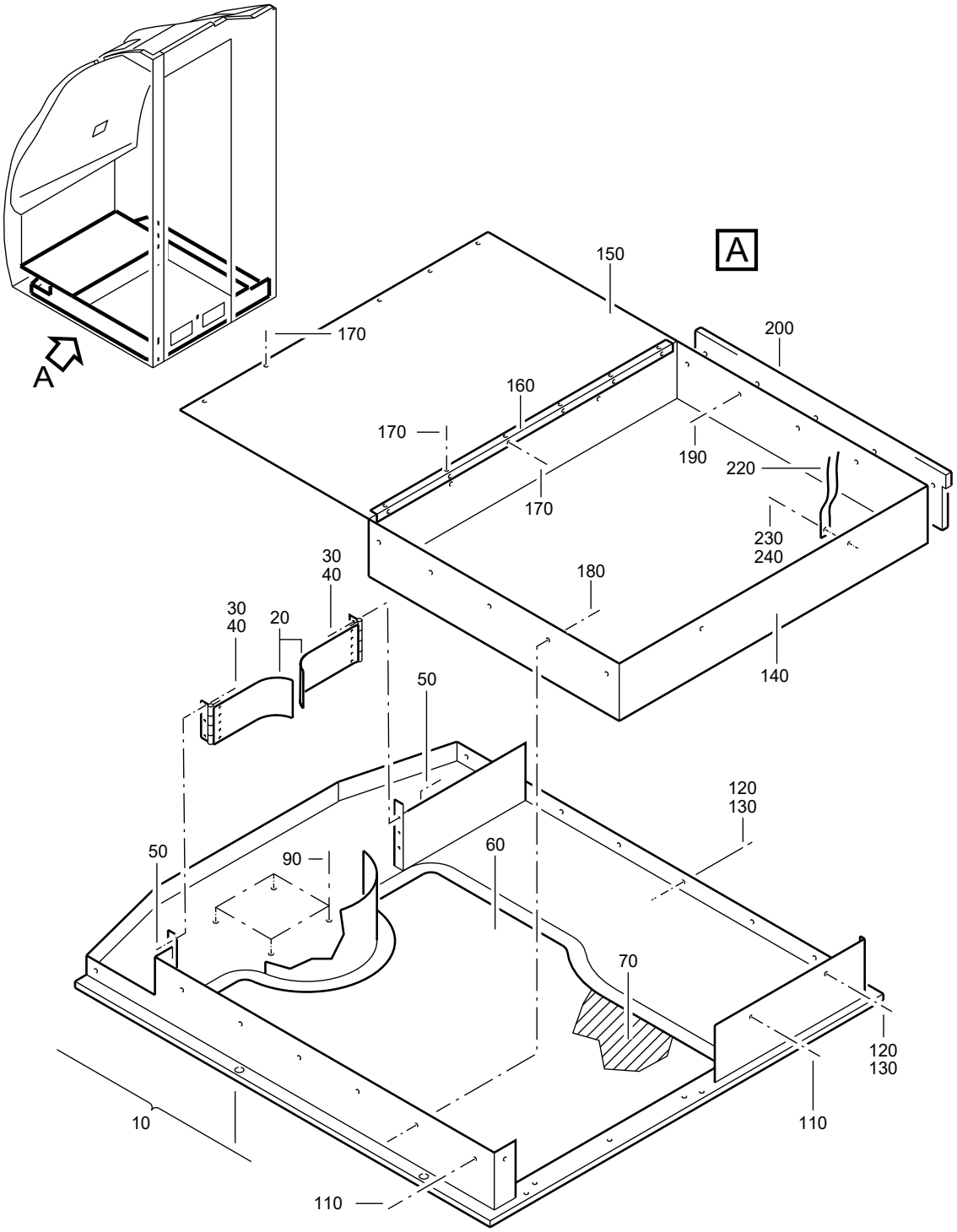

F_PL_254151_13_F_01_00

PAN-FLOOR
Figure 13F/EN254151SHEET13F01

FIG. ITEM	PART NUMBER	AIRLINE STOCK NUMBER	NOMENCLATURE 1234567	EFF CODE	UNITS PER ASSY
13F					
-001A	D2549020712072		. PAN-FLOOR NP used on 080A (25415141E) SEE 25-41-51-41E FOR NHA		RF
010A	A225401201-600		. . PAN ASSY-FLOOR used on 001A		001
020A	A325400202-500		. . . FLAP used on 010A		002
030A	NAS1096-2-9		. . . SCREW BUY PN NAS1801-08-9 used on 010A		004
040A	NAS1149CN832R		. . . WASHER used on 010A		004
050A	MS21042-08		. . . NUT used on 010A		004
060A	422225020		. . . COVERING-FLOOR, NON-TEXTILE used on 010A SEE SIL 25-131 FOR DET		001
070A	423210830		. . . TAPE-PVC used on 010A		001
-080A	NAS1835C08		. . . INSERT used on 010A		003
090A	NAS1833C4-500		. . . INSERT used on 010A		004
-100A	NSA5345-08C		. . . INSERT used on 010A		002
110A	NAS1102-08-7		. . SCREW used on 001A		009

- ITEM NOT ILLUSTRATED

FIG. ITEM	PART NUMBER	AIRLINE STOCK NUMBER	NOMENCLATURE 1234567	EFF CODE	UNITS PER ASSY
120A	NAS1096-2-9		. . SCREW BUY PN NAS1801-08-9 used on 001A		007
130A	ASNA0113-40ADL		. . WASHER used on 001A		007
140A	A225401238-500		. . PAN ASSY-FLOOR used on 001A		001
150A	A225401238-506		. . COVERING ASSY-FLOOR used on 001A		001
160A	A225401238-208		. . ANGLE-L used on 001A		001
170A	NAS514P832-12		. . SCREW used on 001A		018
180A	NAS1102-08-14		. . SCREW used on 001A		005
190A	NAS1102-08-22		. . SCREW used on 001A		005
200A	A225401238-512		. . FILLER ASSY used on 001A		001
-210A	5041-02-0029-12		. . . INSERT used on 200A		005
220A	A225401238-014		. . BELT used on 001A		001
230A	NAS514P832-6		. . SCREW used on 001A		004
240A	DAN125-4		. . WASHER used on 001A		004

- ITEM NOT ILLUSTRATED

THIS PAGE IS INTENTIONALLY LEFT BLANK

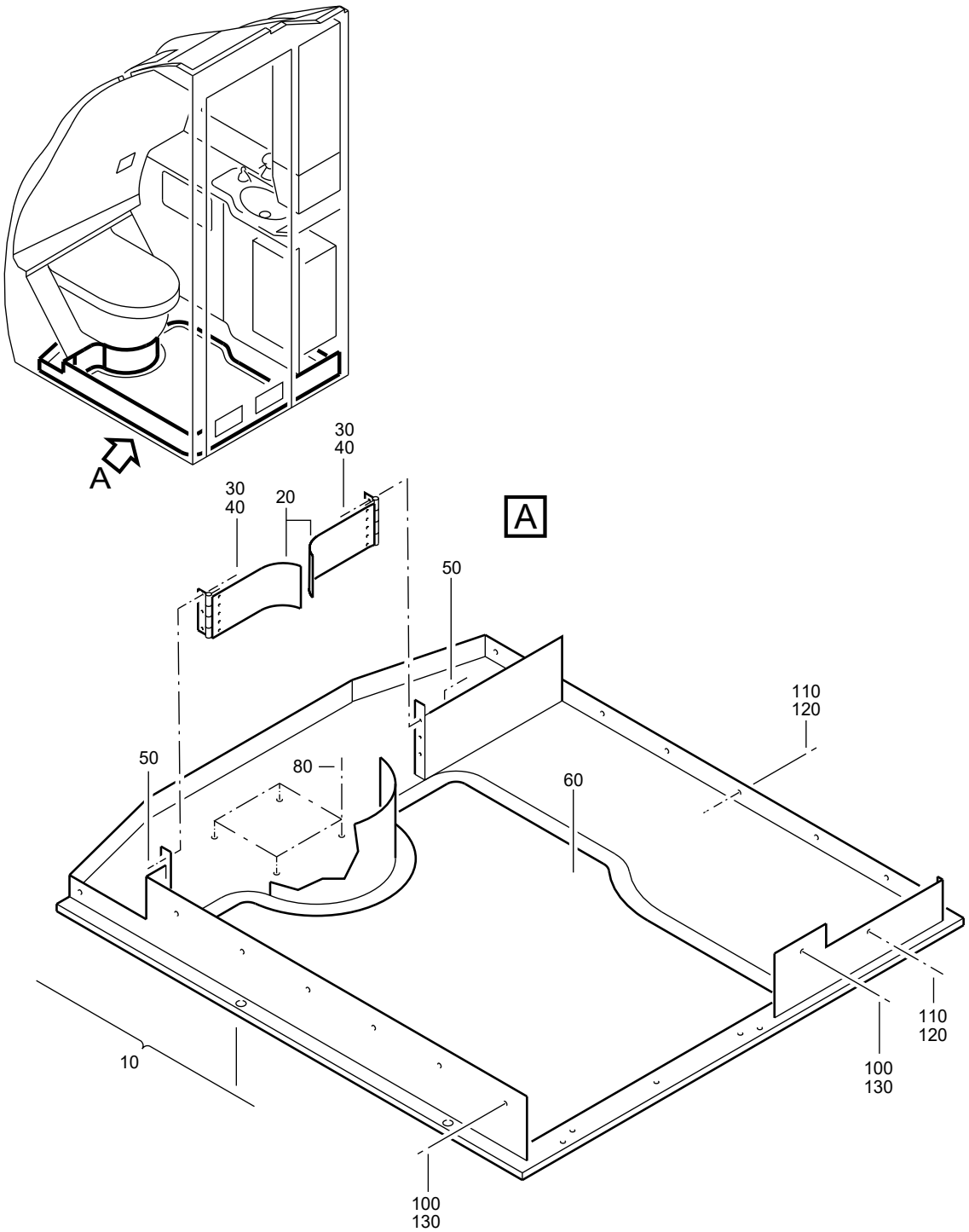

F_PL_254151_13_G_01_00

PAN-FLOOR
Figure 13G/EN254151SHEET13G01

FIG. ITEM	PART NUMBER	AIRLINE STOCK NUMBER	NOMENCLATURE 1234567	EFF CODE	UNITS PER ASSY
13G					
-001A	D2549010606872		. PAN-FLOOR NP PRE VSB A2-254-25-131 used on 090G (25415141J), 090G (25415141L), 090F (25415141P), 090D (25415141S), 090D (25415141U), 090B(25415141V) SEE 25-41-51-41J FOR NHA SEE 25-41-51-41L FOR NHA SEE 25-41-51-41P FOR NHA SEE 25-41-51-41S FOR NHA SEE 25-41-51-41U FOR NHA SEE 25-41-51-41V FOR NHA		RF
-001B	D2549030503872		. PAN-FLOOR NP used on 090H (25415141K) SEE 25-41-51-41K FOR NHA		RF
-001C	D2549010609872		. PAN-FLOOR NP used on 090D (25415141P) SEE 25-41-51-41P FOR NHA		RF
-001D	D2549020803672		. PAN-FLOOR NP used on 090J (25415141S) SEE 25-41-51-41S FOR NHA		RF
-001E	D2549020708072		. PAN-FLOOR NP used on 090L (25415141G), 090B (25415141L), 090C(25415141P) SEE 25-41-51-41G FOR NHA SEE 25-41-51-41L FOR NHA SEE 25-41-51-41P FOR NHA		RF
-001F	D2549020803472		. PAN-FLOOR NP used on 090F (25415141S) SEE 25-41-51-41S FOR NHA		RF

- ITEM NOT ILLUSTRATED

FIG. ITEM	PART NUMBER	AIRLINE STOCK NUMBER	NOMENCLATURE 1234567	EFF CODE	UNITS PER ASSY
-001G	D2549030612472		. PAN-FLOOR NP used on 090H (25415141S), 090C (25415141V) SEE 25-41-51-41S FOR NHA SEE 25-41-51-41V FOR NHA		RF
-001H	R22540161400072		. PAN-FLOOR NP POST VSB A2-254-25-131 used on 090J (25415141L) SEE 25-41-51-41L FOR NHA		RF
010A	A225401201-712		. . PAN ASSY-FLOOR PRE VSB A2-254-25-131 used on 001A		001
-010B	A225401201-710		. . PAN ASSY-FLOOR used on 001B		001
-010C	A225401201-718		. . PAN ASSY-FLOOR used on 001C		001
-010D	A225401201-728		. . PAN ASSY-FLOOR used on 001D		001
-010E	A225401201-704		. . PAN ASSY-FLOOR used on 001E		001
-010F	A225401201-732		. . PAN ASSY-FLOOR used on 001F		001
-010G	A225401201-724		. . PAN ASSY-FLOOR used on 001G		001
-010H	A225401201-740		. . PAN ASSY-FLOOR POST VSB A2-254-25-131 used on 001H		001
020A	A325400202-500		. . . FLAP used on 010A, 010B, 010D, 010E, 010F, 010G, 010H		002

- ITEM NOT ILLUSTRATED

FIG. ITEM	PART NUMBER	AIRLINE STOCK NUMBER	NOMENCLATURE 1234567	EFF CODE	UNITS PER ASSY
-020B	A325400202-522		. . . FLAP used on 010C		002
030A	NAS1096-2-9		. . . SCREW BUY PN NAS1801-08-9 used on 010A, 010B, 010C, 010D, 010E, 010F, 010G, 010H		004
040A	NAS1149CN832R		. . . WASHER used on 010A, 010B, 010C, 010D, 010E, 010F, 010G, 010H		004
050A	MS21042-08		. . . NUT used on 010A, 010B, 010C, 010D, 010E, 010F, 010G, 010H		004
060A	473C6529		. . . COVERING-FLOOR, NON TEXTILE PRE VSB A2-254-25-131 used on 010A SEE SIL 25-131 FOR DET		001
-060B	473675600		. . . COVERING-FLOOR, NON-TEXTILE used on 010B SEE SIL 25-131 FOR DET		001
-060C	S3510		. . . COVERING-FLOOR, NON TEXTILE used on 010C		001
-060D	473675615		. . . COVERING-FLOOR, NON TEXTILE used on 010D		001
-060E	440501		. . . COVERING-FLOOR, NON-TEXTILE used on 010E SEE SIL 25-131 FOR DET		001

- ITEM NOT ILLUSTRATED

FIG. ITEM	PART NUMBER	AIRLINE STOCK NUMBER	NOMENCLATURE 1234567	EFF CODE	UNITS PER ASSY
-060F	L0NC0IN2-187		. . . COVERING-FLOOR, NON-TEXTILE used on 010F SEE SIL 25-131 FOR DET		001
-060G	A225400201-002		. . . COVERING-FLOOR, NON TEXTILE POST VSB A2-254-25-131 used on 010H		001
-063A	ABS5768A500		. . . TAPE-ADHESIVE POST VSB A2-254-25-131 used on 010H		AR
-066A	FLOORSIL2AI8-15		. . . SEALANT POST VSB A2-254-25-131 FLOORSIL2-AI8-15 used on 010H		AR
-070A	NAS1835C08		. . . INSERT used on 010A, 010B, 010C, 010D, 010E, 010F, 010G, 010H		003
080A	NAS1833C4-500		. . . INSERT used on 010A, 010B, 010C, 010D, 010E, 010F, 010G, 010H		004
-090A	NSA5345-08C		. . . INSERT used on 010A, 010B, 010C, 010D, 010E, 010F, 010G, 010H		002
100A	NAS1102-08-7		. . SCREW used on 001A, 001B, 001C, 001D, 001E, 001F, 001G, 001H		007
110A	NAS1096-2-9		. . SCREW BUY PN NAS1801-08-9 used on 001A, 001B, 001C, 001D, 001E, 001F, 001G, 001H		008

- ITEM NOT ILLUSTRATED

FIG. ITEM	PART NUMBER	AIRLINE STOCK NUMBER	NOMENCLATURE 1234567	EFF CODE	UNITS PER ASSY
120A	ASNA0113-40ADL		. . WASHER used on 001A, 001B, 001C, 001D, 001E, 001F, 001G, 001H		008
130A	0-123-000700000		. . WASHER used on 001A, 001B, 001C, 001D, 001E, 001F, 001G, 001H		007

- ITEM NOT ILLUSTRATED

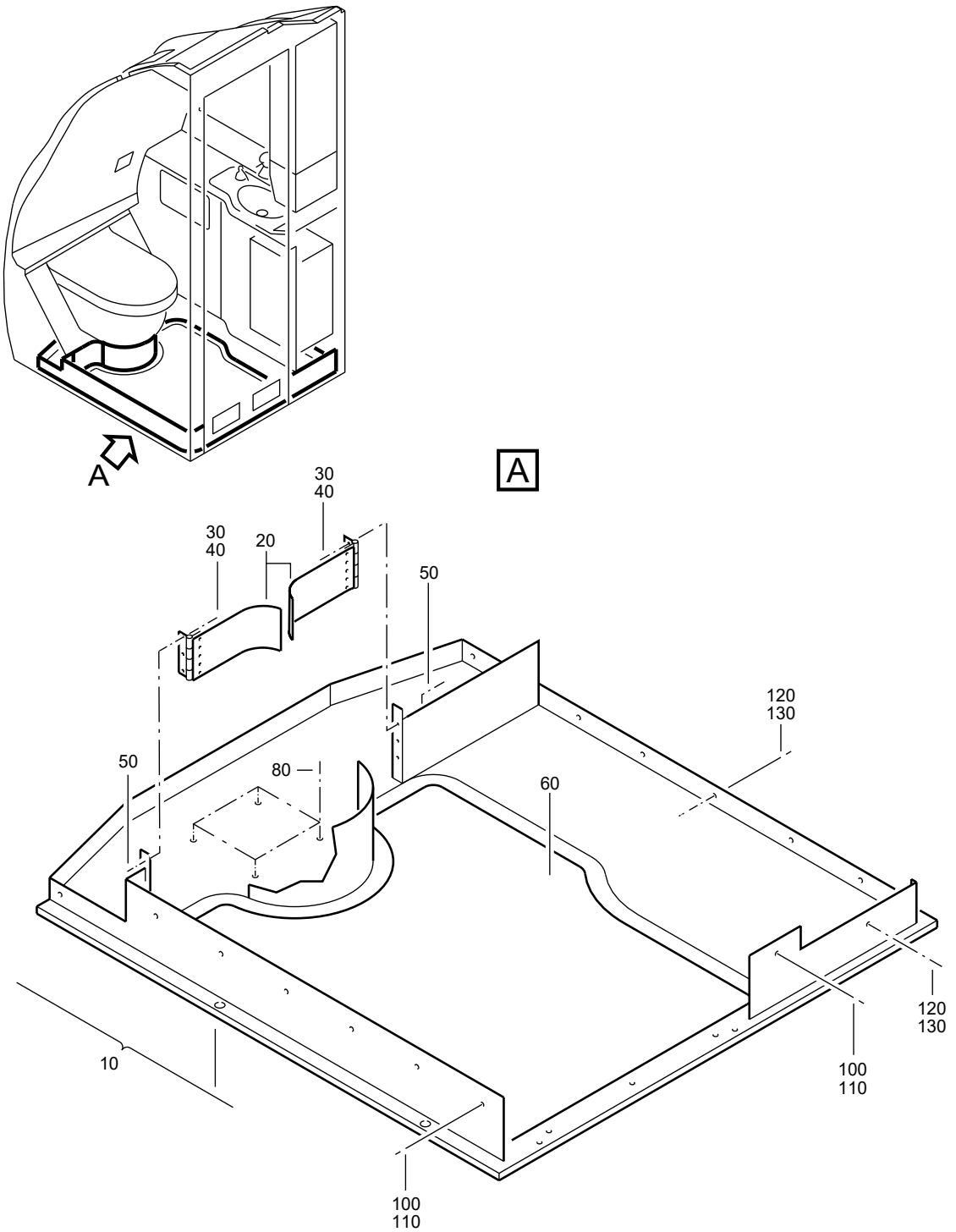

F_PL_254151_13_H_01_00

PAN-FLOOR
Figure 13H/EN254151SHEET13H01

FIG. ITEM	PART NUMBER	AIRLINE STOCK NUMBER	NOMENCLATURE 1234567	EFF CODE	UNITS PER ASSY
13H					
-001A	D2549020512272		. PAN-FLOOR NP used on 090D (25415141L), 090H (25415141P), 090D (25415141X) SEE 25-41-51-41L FOR NHA SEE 25-41-51-41P FOR NHA SEE 25-41-51-41X FOR NHA		RF
-001B	D2549020514672		. PAN-FLOOR NP used on 090E (25415141L), 090G (25415141N), 090J(25415141R), 090A (25415141S), 090A (25415141T) SEE 25-41-51-41L FOR NHA SEE 25-41-51-41N FOR NHA SEE 25-41-51-41R FOR NHA SEE 25-41-51-41S FOR NHA SEE 25-41-51-41T FOR NHA		RF
-001C	D2549020511072		. PAN-FLOOR NP used on 090J (25415141K), 090G (25415141P), 090C(25415141U) SEE 25-41-51-41K FOR NHA SEE 25-41-51-41P FOR NHA SEE 25-41-51-41U FOR NHA		RF
-001D	D2549010607872		. PAN-FLOOR NP used on 090B (25415141M), 090B (25415141N) SEE 25-41-51-41M FOR NHA SEE 25-41-51-41N FOR NHA		RF

- ITEM NOT ILLUSTRATED

FIG. ITEM	PART NUMBER	AIRLINE STOCK NUMBER	NOMENCLATURE 1234567		EFF CODE	UNITS PER ASSY
-001E	D2549020512672		. PAN-FLOOR PRE VSB A2-254-25-131 used on 090C (25415141M), 090K (25415141N), 090D (25415141T) SEE 25-41-51-41M FOR NHA SEE 25-41-51-41N FOR NHA SEE 25-41-51-41T FOR NHA	NP		RF
-001F	D2549030611672		. PAN-FLOOR used on 090D (25415141M), 090B (25415141R) SEE 25-41-51-41M FOR NHA SEE 25-41-51-41R FOR NHA	NP		RF
-001G	D2549020505672		. PAN-FLOOR PRE VSB A2-254-25-039 used on 090F (25415141L), 090K (25415141S), 090A(25415141V) SEE 25-41-51-41L FOR NHA SEE 25-41-51-41S FOR NHA SEE 25-41-51-41V FOR NHA	NP		RF
-001H	D2549030611472		. PAN-FLOOR used on 090G (25415101W), 090E (25415141M) SEE 25-41-51-01W FOR NHA SEE 25-41-51-41M FOR NHA	NP		RF
-001J	D2549030611272		. PAN-FLOOR used on 090F (25415141M), 090D (25415141N), 090F (25415141W) SEE 25-41-51-41M FOR NHA SEE 25-41-51-41N FOR NHA SEE 25-41-51-41W FOR NHA	NP		RF
-001K	D2549010607272		. PAN-FLOOR used on 090G (25415141M) SEE 25-41-51-41M FOR NHA	NP		RF

- ITEM NOT ILLUSTRATED

FIG. ITEM	PART NUMBER	AIRLINE STOCK NUMBER	NOMENCLATURE 1234567		EFF CODE	UNITS PER ASSY
-001L	D2549030610672		. PAN-FLOOR used on 090H (25415141M), 090C (25415141T), 090D (25415141W) SEE 25-41-51-41M FOR NHA SEE 25-41-51-41T FOR NHA SEE 25-41-51-41W FOR NHA	NP		RF
-001M	D2549020512472		. PAN-FLOOR PRE VSB A2-254-25-039 used on 090H (25415101N), 090H (25415101Q), 090J (25415101U), 090C (25415101X), 090F (25415101Y), 090F(25415141C), 090A (25415141F), 090J (25415141H), 090H(25415141N), 090E (25415141S), 090B (25415141W) SEE 25-41-51-01N FOR NHA SEE 25-41-51-01Q FOR NHA SEE 25-41-51-01U FOR NHA SEE 25-41-51-01X FOR NHA SEE 25-41-51-01Y FOR NHA SEE 25-41-51-41C FOR NHA SEE 25-41-51-41F FOR NHA SEE 25-41-51-41H FOR NHA SEE 25-41-51-41N FOR NHA SEE 25-41-51-41S FOR NHA SEE 25-41-51-41W FOR NHA	NP		RF
-001N	R22540162200072		. PAN-FLOOR POST VSB A2-254-25-039 used on 090L (25415141V) SEE 25-41-51-41V FOR NHA	NP		RF

- ITEM NOT ILLUSTRATED

FIG. ITEM	PART NUMBER	AIRLINE STOCK NUMBER	NOMENCLATURE 1234567	EFF CODE	UNITS PER ASSY
-001P	R22540116800072		. PAN-FLOOR NP POST VSB A2-254-25-039 used on 090N (25415141H), 090L (25415141N) SEE 25-41-51-41H FOR NHA SEE 25-41-51-41N FOR NHA		RF
-001Q	R22540113701672		. PAN-FLOOR NP POST VSB A2-254-25-131 used on 090F (25415141T) SEE 25-41-51-41T FOR NHA		RF
010A	A225401201-648		. . PAN ASSY-FLOOR used on 001A		001
-010B	A225401201-612		. . PAN ASSY-FLOOR used on 001B		001
-010C	A225401201-682		. . PAN ASSY-FLOOR used on 001C		001
-010D	A225401201-658		. . PAN ASSY-FLOOR used on 001D		001
-010E	A225401201-618		. . PAN ASSY-FLOOR PRE VSB A2-254-25-131 used on 001E		001
-010F	A225401201-638		. . PAN ASSY-FLOOR used on 001F		001
-010G	A225401201-714		. . PAN ASSY-FLOOR PRE VSB A2-254-25-039 used on 001G		001
-010H	A225401201-666		. . PAN ASSY-FLOOR used on 001H		001
-010J	A225401201-698		. . PAN ASSY-FLOOR used on 001J		001

- ITEM NOT ILLUSTRATED

FIG. ITEM	PART NUMBER	AIRLINE STOCK NUMBER	NOMENCLATURE 1234567	EFF CODE	UNITS PER ASSY
-010K	A225401201-630		. . PAN ASSY-FLOOR used on 001K		001
-010L	A225401201-620		. . PAN ASSY-FLOOR used on 001L		001
-010M	A225401201-716		. . PAN ASSY-FLOOR PRE VSB A2-254-25-039 used on 001M		001
-010N	A225401201-736		. . PAN ASSY-FLOOR POST VSB A2-254-25-039 used on 001N, 001P		001
-010P	A225401201-740		. . PAN ASSY-FLOOR POST VSB A2-254-25-131 used on 001Q		001
020A	A325400202-500		. . . FLAP used on 010A, 010B, 010C, 010D, 010E, 010F, 010G, 010H, 010J, 010K, 010L, 010M, 010N, 010P		002
030A	NAS1096-2-9		. . . SCREW BUY PN NAS1801-08-9 used on 010A, 010B, 010C, 010D, 010E, 010F, 010G, 010H, 010J, 010K, 010L, 010M, 010N, 010P		004
040A	NAS1149CN832R		. . . WASHER used on 010A, 010B, 010C, 010D, 010E, 010F, 010G, 010H, 010J, 010K, 010L, 010M, 010N, 010P		004

- ITEM NOT ILLUSTRATED

FIG. ITEM	PART NUMBER	AIRLINE STOCK NUMBER	NOMENCLATURE 1234567	EFF CODE	UNITS PER ASSY
050A	MS21042-08		. . . NUT used on 010A, 010B, 010C, 010D, 010E, 010F, 010G, 010H, 010J, 010K, 010L, 010M, 010N, 010P		004
060A	473675620		. . . COVERING-FLOOR, NON-TEXTILE used on 010A SEE SIL 25-131 FOR DET		001
-060B	L0NC0IN2-187		. . . COVERING-FLOOR, NON-TEXTILE used on 010B, 010C SEE SIL 25-131 FOR DET		001
-060C	477679800		. . . COVERING-FLOOR, NON-TEXTILE used on 010D SEE SIL 25-131 FOR DET		001
-060D	S00992-012-00		. . . COVERING-FLOOR, NON-TEXTILE PRE VSB A2-254-25-131 used on 010E SEE SIL 25-131 FOR DET		001
-060E	473649800		. . . COVERING-FLOOR, NON-TEXTILE used on 010F, 010K SEE SIL 25-131 FOR DET		001
-060F	473649721		. . . COVERING-FLOOR, NON TEXTILE PRE VSB A2-254-25-039 used on 010G SEE SIL 25-131 FOR DET		001

- ITEM NOT ILLUSTRATED

FIG. ITEM	PART NUMBER	AIRLINE STOCK NUMBER	NOMENCLATURE 1234567	EFF CODE	UNITS PER ASSY
-060G	401365		. . . COVERING-FLOOR, NON-TEXTILE used on 010H SEE SIL 25-131 FOR DET		001
-060H	SHE2537-32-060D		. . . COVERING-FLOOR, NON TEXTILE used on 010J		001
-060J	L0NC0IN2-191		. . . COVERING-FLOOR, NON-TEXTILE used on 010L SEE SIL 25-131 FOR DET		001
-060K	477678900		. . . COVERING-FLOOR, NON-TEXTILE PRE VSB A2-254-25-039 used on 010M SEE SIL 25-131 FOR DET		001
-060L	A225400201-000		. . . COVERING-FLOOR, NON-TEXTILE POST VSB A2-254-25-039 used on 010N SEE SIL 25-131 FOR DET		001
-060M	A225400201-002		. . . COVERING-FLOOR, NON-TEXTILE POST VSB A2-254-25-131 used on 010P		001
-063A	ABS5768A500		. . . TAPE-ADHESIVE POST VSB A2-254-25-131 used on 010P		AR
-066A	FLOORSIL2AI8-15		. . . SEALANT POST VSB A2-254-25-131 FLOORSIL2-AI8-15 used on 010P		AR

- ITEM NOT ILLUSTRATED

FIG. ITEM	PART NUMBER	AIRLINE STOCK NUMBER	NOMENCLATURE 1234567	EFF CODE	UNITS PER ASSY
070A	NAS1835C08		. . . INSERT used on 010A, 010B, 010C, 010D, 010E, 010F, 010G, 010H, 010J, 010K, 010L, 010M, 010N, 010P		003
080A	NAS1833C4-500		. . . INSERT used on 010A, 010B, 010C, 010D, 010E, 010F, 010G, 010H, 010J, 010K, 010L, 010M, 010N, 010P		004
-090A	NSA5345-08C		. . . INSERT used on 010A, 010B, 010C, 010D, 010E, 010F, 010G, 010H, 010J, 010K, 010L, 010M, 010N, 010P		002
100A	NAS1102-08-7		. . SCREW used on 001A, 001B, 001C, 001D, 001E, 001F, 001G, 001H, 001J, 001K, 001L, 001M, 001N, 001P, 01Q		007
110A	0-123-000700000		. . WASHER used on 001A, 001B, 001C, 001D, 001E, 001F, 001G, 001H, 001J, 001K, 001L, 001M, 001N, 001P, 001Q		007
120A	NAS1096-2-9		. . SCREW BUY PN NAS1801-08-9 used on 001A, 001B, 001C, 001D, 001E, 001F, 001G, 001H, 001J, 001K, 001L, 001M, 001N, 001P, 001Q		008

- ITEM NOT ILLUSTRATED

FIG. ITEM	PART NUMBER	AIRLINE STOCK NUMBER	NOMENCLATURE 1234567	EFF CODE	UNITS PER ASSY
130A	ASNA0113-40ADL		. . WASHER used on 001A, 001B, 001C, 001D, 001E, 001F, 001G, 001H, 001J, 001K, 001L, 001M, 001N, 001P, 001Q		008

- ITEM NOT ILLUSTRATED

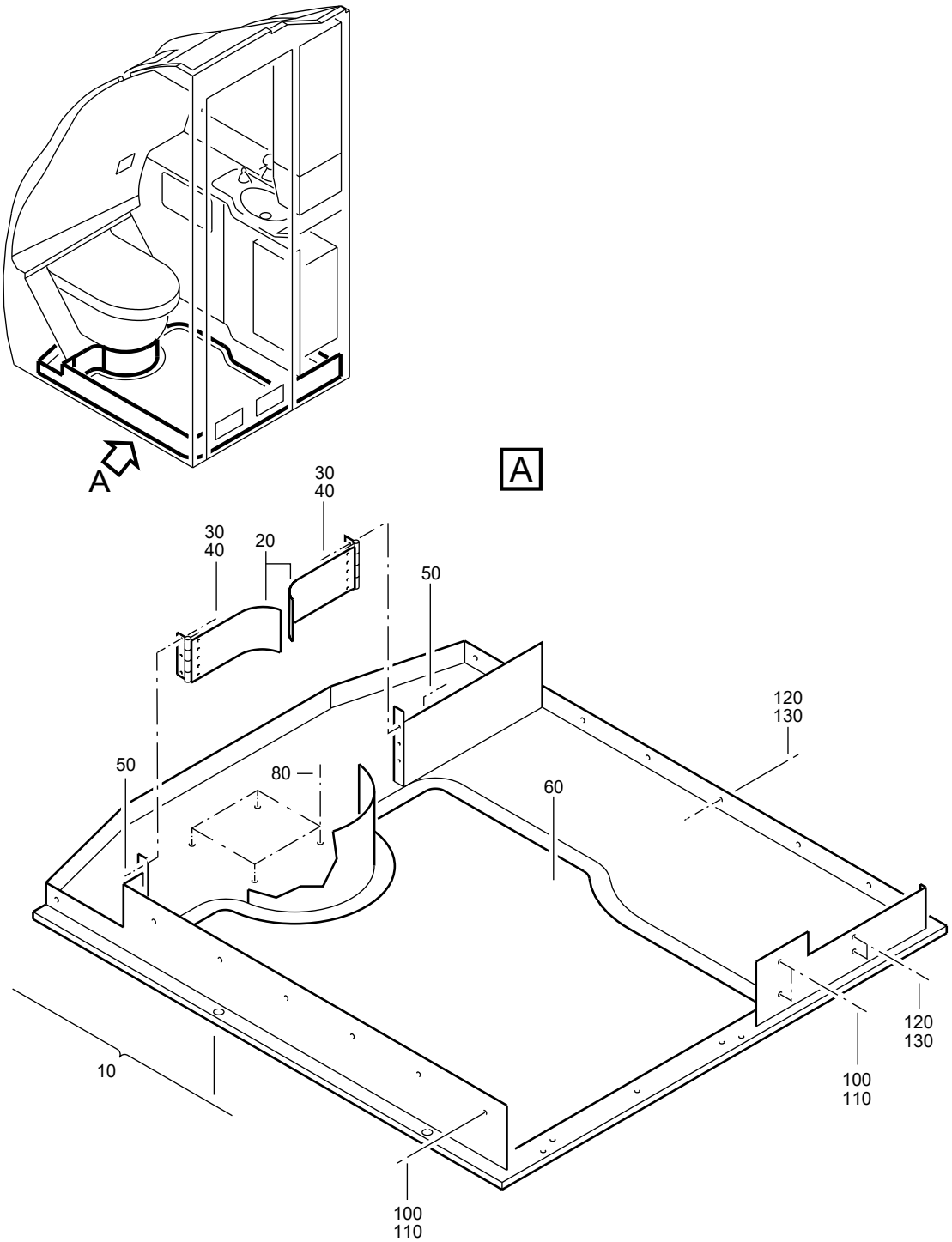

F_PL_254151_13_J_01_00

PAN-FLOOR
Figure 13J/EN254151SHEET13J01

FIG. ITEM	PART NUMBER	AIRLINE STOCK NUMBER	NOMENCLATURE 1234567		EFF CODE	UNITS PER ASSY
13J						
-001A	D2549020510672		. PAN-FLOOR used on 090E (25415141R) SEE 25-41-51-41R FOR NHA	NP		RF
-001B	D2549030401472		. PAN-FLOOR used on 090B (25415141U), 090F (25415141V), 090H(25415141Y), 090G (25415142A), 090K (25415142B) SEE 25-41-51-41U FOR NHA SEE 25-41-51-41V FOR NHA SEE 25-41-51-41Y FOR NHA SEE 25-41-51-42A FOR NHA SEE 25-41-51-42B FOR NHA	NP		RF
-001C	D2549030402272		. PAN-FLOOR used on 090C (25415141X), 090B (254151420), 090C (25415142D) SEE 25-41-51-41X FOR NHA SEE 25-41-51-420 FOR NHA SEE 25-41-51-42D FOR NHA	NP		RF
-001D	D2549020808872		. PAN-FLOOR used on 090F (25415101S), 090J (25415141V), 090E(254151420), 090C (25415142A), 090B (25415142B), 090B(25415142D) SEE 25-41-51-01S FOR NHA SEE 25-41-51-41V FOR NHA SEE 25-41-51-420 FOR NHA SEE 25-41-51-42A FOR NHA SEE 25-41-51-42B FOR NHA SEE 25-41-51-42D FOR NHA	NP		RF

- ITEM NOT ILLUSTRATED

FIG. ITEM	PART NUMBER	AIRLINE STOCK NUMBER	NOMENCLATURE 1234567	EFF CODE	UNITS PER ASSY
-001E	D2549030405272		. PAN-FLOOR NP used on 090E (25415141X), 090A (254151420) SEE 25-41-51-41X FOR NHA SEE 25-41-51-420 FOR NHA		RF
-001F	D2549030402472		. PAN-FLOOR NP used on 090F (25415141X) SEE 25-41-51-41X FOR NHA		RF
-001G	D2549020806072		. PAN-FLOOR NP PRE VSB A2-254-25-130 used on 090G (25415141X), 090C (254151420) SEE 25-41-51-41X FOR NHA SEE 25-41-51-420 FOR NHA		RF
-001H	D2549020807672		. PAN-FLOOR NP used on 090A (25415141Y), 090E (25415141Z), 090E(25415142A) SEE 25-41-51-41Y FOR NHA SEE 25-41-51-41Z FOR NHA SEE 25-41-51-42A FOR NHA		RF
-001J	D2549020814272		. PAN-FLOOR NP used on 090J (25415142A), 090A (25415142F) SEE 25-41-51-42A FOR NHA SEE 25-41-51-42F FOR NHA		RF
-001K	D2549030401072		. PAN-FLOOR NP used on 090J (25415141X), 090D (25415142E) SEE 25-41-51-41X FOR NHA SEE 25-41-51-42E FOR NHA		RF

- ITEM NOT ILLUSTRATED

FIG. ITEM	PART NUMBER	AIRLINE STOCK NUMBER	NOMENCLATURE 1234567	EFF CODE	UNITS PER ASSY
-001L	D2549020810072		. PAN-FLOOR NP used on 090E (25415141Y), 090K (25415142A), 090J(25415142B) SEE 25-41-51-41Y FOR NHA SEE 25-41-51-42A FOR NHA SEE 25-41-51-42B FOR NHA		RF
-001M	D2549030404272		. PAN-FLOOR NP PRE VSB A2-254-25-106 used on 090G (25415141Y), 090C (25415141Z), 090C (25415142C), 090J (25415142D), 090E (25415142E), 090G (25415142F), 090E (25415142G) SEE 25-41-51-41Y FOR NHA SEE 25-41-51-41Z FOR NHA SEE 25-41-51-42C FOR NHA SEE 25-41-51-42D FOR NHA SEE 25-41-51-42E FOR NHA SEE 25-41-51-42F FOR NHA SEE 25-41-51-42G FOR NHA		RF
-001N	R22540166200072		. PAN-FLOOR NP POST VSB A2-254-25-106 used on 090J (25415142C), 090M (25415142G) SEE 25-41-51-42C FOR NHA SEE 25-41-51-42G FOR NHA		RF
-001P	R22540119605672		. PAN-FLOOR NP POST VSB A2-254-25-130 used on 090L (25415141X), 090J (254151420) SEE 25-41-51-41X FOR NHA SEE 25-41-51-420 FOR NHA		RF
010A	A225401201-720		. . PAN ASSY-FLOOR used on 001A		001
-010B	A225401202-800		. . PAN ASSY-FLOOR used on 001B		001

- ITEM NOT ILLUSTRATED

FIG. ITEM	PART NUMBER	AIRLINE STOCK NUMBER	NOMENCLATURE 1234567	EFF CODE	UNITS PER ASSY
-010C	A225401202-716		. . PAN ASSY-FLOOR used on 001C		001
-010D	A225401202-648		. . PAN ASSY-FLOOR used on 001D		001
-010E	A225401202-620		. . PAN ASSY-FLOOR used on 001E		001
-010F	A225401202-698		. . PAN ASSY-FLOOR used on 001F		001
-010G	A225401202-672		. . PAN ASSY-FLOOR used on 001G		001
-010H	A225401202-732		. . PAN ASSY-FLOOR used on 001H		001
-010J	A225401202-684		. . PAN ASSY-FLOOR used on 001J		001
-010K	A225401202-666		. . PAN ASSY-FLOOR used on 001K		001
-010L	A225401202-638		. . PAN ASSY-FLOOR used on 001L		001
-010M	A225401202-680		. . PAN ASSY-FLOOR PRE VSB A2-254-25-106 used on 001M		001
-010N	A225401202-900		. . PAN ASSY-FLOOR POST VSB A2-254-25-106 used on 001N		001
-010P	A225401202-790		. . PAN ASSY-FLOOR POST VSB A2-254-25-130 used on 001P		001
020A	A325400202-514		. . . FLAP used on 010A		002

- ITEM NOT ILLUSTRATED

FIG. ITEM	PART NUMBER	AIRLINE STOCK NUMBER	NOMENCLATURE 1234567	EFF CODE	UNITS PER ASSY
-020B	A325400202-518		. . . FLAP used on 010B		002
-020C	A325400202-500		. . . FLAP used on 010C, 010D, 010E, 010F, 010G, 010H, 010K, 010L, 010M, 010N, 010P		002
-020D	A325400202-506		. . . FLAP used on 010J		002
030A	NAS1096-2-9		. . . SCREW BUY PN NAS1801-08-9 used on 010A, 010B, 010C, 010D, 010E, 010F, 010G, 010H, 010J, 010K, 010L, 010M, 010N, 010P		004
040A	NAS1149CN832R		. . . WASHER used on 010A, 010B, 010C, 010D, 010E, 010F, 010G, 010H, 010J, 010K, 010L, 010M, 010N, 010P		004
050A	MS21042-08		. . . NUT used on 010A, 010B, 010C, 010D, 010E, 010F, 010G, 010H, 010J, 010K, 010L, 010M, 010N, 010P		004
060A	SBM004F		. . . COVERING-FLOOR, NON TEXTILE used on 010A		001
-060B	L0NC0IN2-193		. . . COVERING ASSY-FLOOR, NON TEXTILE used on 010B SEE SIL 25-131 FOR DET		001

- ITEM NOT ILLUSTRATED

FIG. ITEM	PART NUMBER	AIRLINE STOCK NUMBER	NOMENCLATURE 1234567	EFF CODE	UNITS PER ASSY
-060C	477678900		. . . COVERING-FLOOR, NON-TEXTILE used on 010C SEE SIL 25-131 FOR DET		001
-060D	473675620		. . . COVERING-FLOOR, NON-TEXTILE PRE VSB A2-254-25-106 used on 010D, 010M SEE SIL 25-131 FOR DET		001
-060E	L0NC0IN2-191		. . . COVERING-FLOOR, NON-TEXTILE used on 010E SEE SIL 25-131 FOR DET		001
-060F	SHE2537-32-060D		. . . COVERING-FLOOR, NON TEXTILE used on 010F		001
-060G	FL01-0274Y3V1		. . . COVERING-FLOOR, NON-TEXTILE PRE VSB A2-254-25-130 used on 010G		001
-060H	L0NC0IN2-187		. . . COVERING-FLOOR, NON-TEXTILE used on 010H SEE SIL 25-131 FOR DET		001
-060J	S3595		. . . COVERING-FLOOR, NON-TEXTILE used on 010J		001
-060K	473649800		. . . COVERING-FLOOR, NON-TEXTILE used on 010L SEE SIL 25-131 FOR DET		001

- ITEM NOT ILLUSTRATED

FIG. ITEM	PART NUMBER	AIRLINE STOCK NUMBER	NOMENCLATURE 1234567	EFF CODE	UNITS PER ASSY
-060L	401365		. . . COVERING-FLOOR, NON-TEXTILE used on 010K SEE SIL 25-131 FOR DET		001
-060M	S017403		. . . COVERING-FLOOR, NON-TEXTILE POST VSB A2-254-25-106 used on 010N		001
-060N	A225400201-004		. . . COVERING-FLOOR, NON-TEXTILE POST VSB A2-254-25-130 used on 010P		001
-62A	FLOORSIL2AI8-15		. . . SEALANT POST VSB A2-254-25-106 FLOORSIL2-AI8-15 used on 010N		AR
-62B	FLOORSIL2AI8-8		. . . SEALANT POST VSB A2-254-25-130 used on 010P FLOORSIL2-AI8-8		AR
-64A	ABS5768A500		. . . TAPE-ADHESIVE POST VSB A2-254-25-130 POST VSB A2-254-25-106 used on 010N, 010P SCOTCH 950 NBC/ABS 5768A-500		AR
-070A	NAS1835C08		. . . INSERT used on 010A, 010B, 010C, 010D, 010E, 010F, 010G, 010H, 010J, 010K, 010L, 010M, 010N, 010P		003

- ITEM NOT ILLUSTRATED

FIG. ITEM	PART NUMBER	AIRLINE STOCK NUMBER	NOMENCLATURE 1234567	EFF CODE	UNITS PER ASSY
080A	NAS1833C4-500		. . . INSERT used on 010A, 010B, 010C, 010D, 010E, 010F, 010G, 010H, 010J, 010K, 010L, 010M, 010N, 010P		004
-090A	NSA5345-08C		. . . INSERT used on 010A, 010B, 010C, 010D, 010E, 010F, 010G, 010H, 010J, 010K, 010L, 010M, 010N, 010P		002
100A	NAS1102-08-7		. . SCREW USE AS REQUIRED used on 001A, 001B, 001C, 001D, 001E, 001F, 001G, 001H, 001J, 001K, 001L, 001M, 001N, 001P		AR
110A	0-123-000700000		. . WASHER USE AS REQUIRED used on 001A, 001B, 001C, 001D, 001E, 001F, 001G, 001H, 001J, 001K, 001L, 001M, 001N, 001P		AR
120A	NAS1096-2-9		. . SCREW USE AS REQUIRED BUY PN NAS1801-08-9 used on 001A, 001B, 001C, 001D, 001E, 001F, 001G, 001H, 001J, 001K, 001L, 001M, 001N, 001P		AR
130A	ASNA0113-40ADL		. . WASHER USE AS REQUIRED used on 001A, 001B, 001C, 001D, 001E, 001F, 001G, 001H, 001J, 001K, 001L, 001M, 001N, 001P		AR

- ITEM NOT ILLUSTRATED

THIS PAGE IS INTENTIONALLY LEFT BLANK

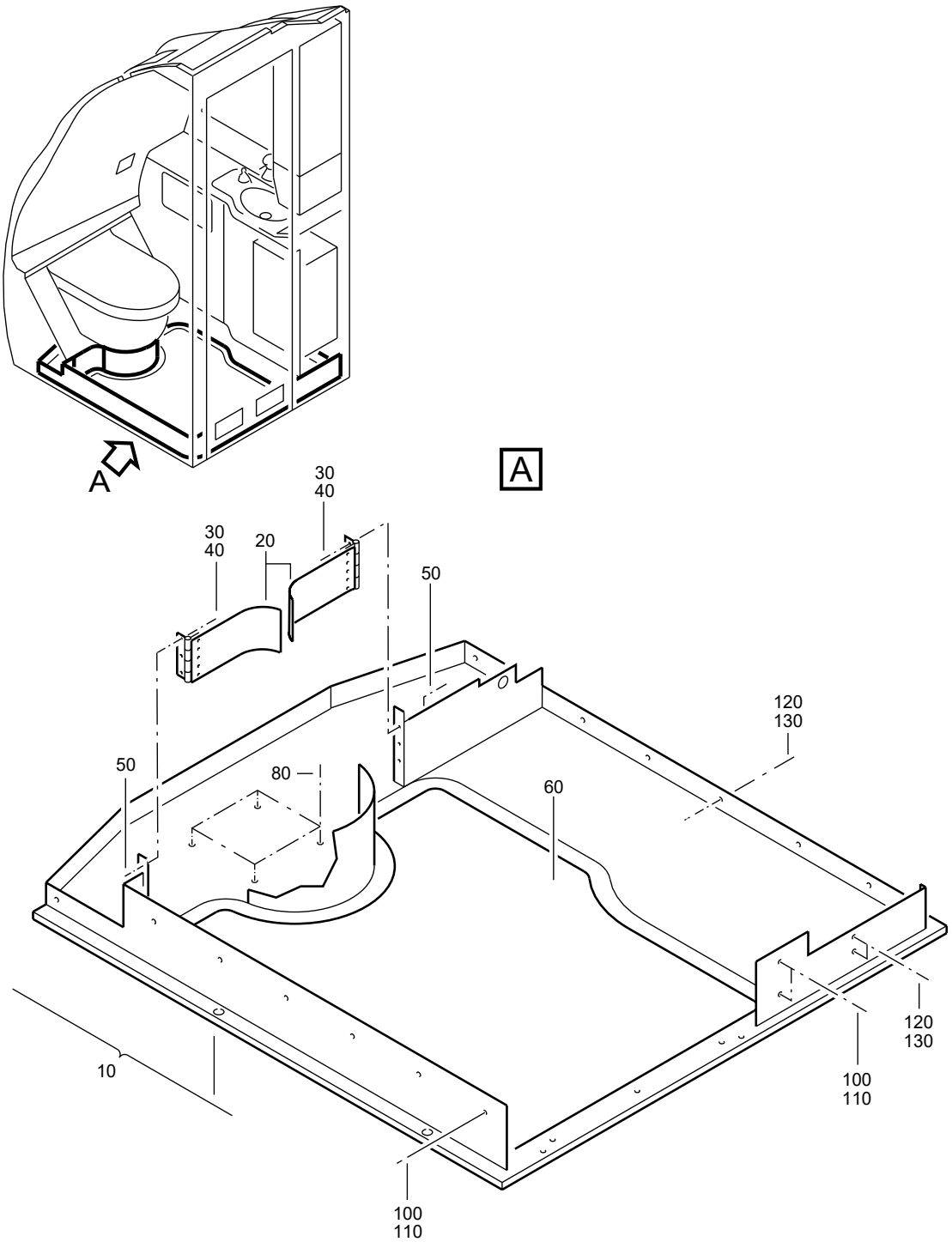

F_PL_254151_13_K_01_00

PAN-FLOOR
Figure 13K/EN254151SHEET13K01

FIG. ITEM	PART NUMBER	AIRLINE STOCK NUMBER	NOMENCLATURE 1234567		EFF CODE	UNITS PER ASSY
13K						
-001A	D2549020804872		. PAN-FLOOR PRE VSB A2-254-25-039 used on 090J (25415141Y), 090F (25415142A) SEE 25-41-51-41Y FOR NHA SEE 25-41-51-42A FOR NHA	NP		RF
-001B	D2549030400672		. PAN-FLOOR used on 090C (25415141Y), 090B (25415141Z), 090H (25415142A), 090F (25415142B), 090A (25415142D), 090D (25415142F) SEE 25-41-51-41Y FOR NHA SEE 25-41-51-41Z FOR NHA SEE 25-41-51-42A FOR NHA SEE 25-41-51-42B FOR NHA SEE 25-41-51-42D FOR NHA SEE 25-41-51-42F FOR NHA	NP		RF
-001C	D2549010610872		. PAN-FLOOR used on 090K (25415141X) SEE 25-41-51-41X FOR NHA	NP		RF
-001D	D2549020811672		. PAN-FLOOR used on 090F (25415141Z), 090E (25415142B), 090F(25415142C), 090B (25415142F) SEE 25-41-51-41Z FOR NHA SEE 25-41-51-42B FOR NHA SEE 25-41-51-42C FOR NHA SEE 25-41-51-42F FOR NHA	NP		RF
-001E	D2549010613272		. PAN-FLOOR used on 090G (25415141Z) SEE 25-41-51-41Z FOR NHA	NP		RF

- ITEM NOT ILLUSTRATED

FIG. ITEM	PART NUMBER	AIRLINE STOCK NUMBER	NOMENCLATURE 1234567	EFF CODE	UNITS PER ASSY
-001F	D2549030405072		. PAN-FLOOR NP used on 090A (25415141Z) SEE 25-41-51-41Z FOR NHA		RF
-001G	D2549020812072		. PAN-FLOOR NP used on 090A (25415142A), 090A (25415142C), 090C(25415142F) SEE 25-41-51-42A FOR NHA SEE 25-41-51-42C FOR NHA SEE 25-41-51-42F FOR NHA		RF
-001H	D2549020805472		. PAN-FLOOR NP used on 090F (254151420), 090B (25415142A), 090C(25415142E) SEE 25-41-51-420 FOR NHA SEE 25-41-51-42A FOR NHA SEE 25-41-51-42E FOR NHA		RF
-001J	D2549030401272		. PAN-FLOOR NP used on 090D (25415142A), 090M (25415142D), 090K (25415142G) SEE 25-41-51-42A FOR NHA SEE 25-41-51-42D FOR NHA SEE 25-41-51-42G FOR NHA		RF
-001K	D2549010611272		. PAN-FLOOR NP used on 090A (25415141X) SEE 25-41-51-41X FOR NHA		RF
-001L	D2549020812872		. PAN-FLOOR NP used on 090C (25415142B) SEE 25-41-51-42B FOR NHA		RF
-001M	R22540162200272		. PAN-FLOOR NP POST VSB A2-254-25-039 used on 090L (25415141Y) SEE 25-41-51-41Y FOR NHA		RF
010A	A225401202-714		. . PAN ASSY-FLOOR used on 001A		001

- ITEM NOT ILLUSTRATED

FIG. ITEM	PART NUMBER	AIRLINE STOCK NUMBER	NOMENCLATURE 1234567	EFF CODE	UNITS PER ASSY
-010B	A225401202-712		. . PAN ASSY-FLOOR used on 001B		001
-010C	A225401202-630		. . PAN ASSY-FLOOR used on 001C		001
-010D	A225401202-738		. . PAN ASSY-FLOOR used on 001D		001
-010E	A225401202-714		. . PAN ASSY-FLOOR PRE VSB A2-254-25-039 used on 001E		001
-010F	A225401202-728		. . PAN ASSY-FLOOR used on 001F		001
-010G	A225401202-742		. . PAN ASSY-FLOOR used on 001G		001
-010H	A225401202-668		. . PAN ASSY-FLOOR used on 001H		001
-010J	A225401202-724		. . PAN ASSY-FLOOR,WITHOUT NTF used on 001J		001
-010K	A225401202-702		. . PAN ASSY-FLOOR used on 001K		001
-010L	A225401202-770		. . PAN ASSY-FLOOR used on 001L		001
-010M	A225401201-736		. . PAN ASSY-FLOOR POST VSB A2-254-25-039 used on 001M		001
020A	A325400202-500		. . . FLAP used on 010A, 010B, 010C, 010E, 010F, 010G, 010H, 010J, 010K, 010L, 010M		002

- ITEM NOT ILLUSTRATED

FIG. ITEM	PART NUMBER	AIRLINE STOCK NUMBER	NOMENCLATURE 1234567	EFF CODE	UNITS PER ASSY
-020B	A325400202-508		. . . FLAP used on 010D		002
030A	NAS1096-2-9		. . . SCREW BUY PN NAS1801-08-9 used on 010A, 010B, 010C, 010D, 010E, 010F, 010G, 010H, 010J, 010K, 010L, 010M		004
040A	NAS1149CN832R		. . . WASHER used on 010A, 010B, 010C, 010D, 010E, 010F, 010G, 010H, 010J, 010K, 010L, 010M		004
050A	MS21042-08		. . . NUT used on 010A, 010B, 010C, 010D, 010E, 010F, 010G, 010H, 010J, 010K, 010L, 010M		004
060A	473649721		. . . COVERING-FLOOR, NON TEXTILE PRE VSB A2-254-25-039 used on 010A, 010E		001
-060B	473C6529		. . . COVERING-FLOOR, NON TEXTILE used on 010B		001
-060C	473649800		. . . COVERING-FLOOR, NON-TEXTILE used on 010C SEE SIL 25-131 FOR DET		001
-060D	L0NC0IN2-191		. . . COVERING-FLOOR, NON-TEXTILE used on 010D SEE SIL 25-131 FOR DET		001
-060E	473675615		. . . COVERING-FLOOR, NON TEXTILE used on 010F		001

- ITEM NOT ILLUSTRATED

FIG. ITEM	PART NUMBER	AIRLINE STOCK NUMBER	NOMENCLATURE 1234567	EFF CODE	UNITS PER ASSY
-060F	S00992-012-00		. . . COVERING-FLOOR, NON-TEXTILE used on 010G SEE SIL 25-131 FOR DET		001
-060G	401365		. . . COVERING-FLOOR, NON-TEXTILE used on 010H SEE SIL 25-131 FOR DET		001
-060H	S07489-001P2		. . . COVERING-FLOOR, NON-TEXTILE used on 010K		001
-060J	401222		. . . COVERING-FLOOR, NON TEXTILE used on 010L SEE SIL 25-131 FOR DET		001
-060K	A225400201-000		. . . COVERING-FLOOR, NON TEXTILE POST VSB A2-254-25-039 used on 010M SEE SIL 25-131 FOR DET		001
-070A	NAS1835C08		. . . INSERT used on 010A, 010B, 010C, 010D, 010E, 010F, 010G, 010H, 010J, 010K, 010L, 010M		003
080A	NAS1833C4-500		. . . INSERT used on 010A, 010B, 010C, 010D, 010E, 010F, 010G, 010H, 010J, 010K, 010L, 010M		004
-090A	NSA5345-08C		. . . INSERT used on 010A, 010B, 010C, 010D, 010E, 010F, 010G, 010H, 010J, 010K, 010L, 010M		002

- ITEM NOT ILLUSTRATED

FIG. ITEM	PART NUMBER	AIRLINE STOCK NUMBER	NOMENCLATURE 1234567	EFF CODE	UNITS PER ASSY
100A	NAS1102-08-7		. . SCREW used on 001A, 001B, 001C, 001D, 001E, 001F, 001G, 001H, 001J, 001K, 001M		008
-100B	NAS1102-08-10		. . SCREW POST SB 25-1640 used on 001L		008
110A	0-123-000700000		. . WASHER used on 001A, 001B, 001C, 001D, 001E, 001F, 001G, 001H, 001J, 001K, 001L, 001M		008
120A	NAS1801-08-9		. . SCREW POST SB 25-1640 used on 001A, 001B, 001C, 001D, 001E, 001F, 001G, 001H, 001J, 001K, 001L, 001M		007
130A	ASNA0113-40ADL		. . WASHER used on 001A, 001B, 001C, 001D, 001E, 001F, 001G, 001H, 001J, 001K, 001L, 001M		007

- ITEM NOT ILLUSTRATED

THIS PAGE IS INTENTIONALLY LEFT BLANK

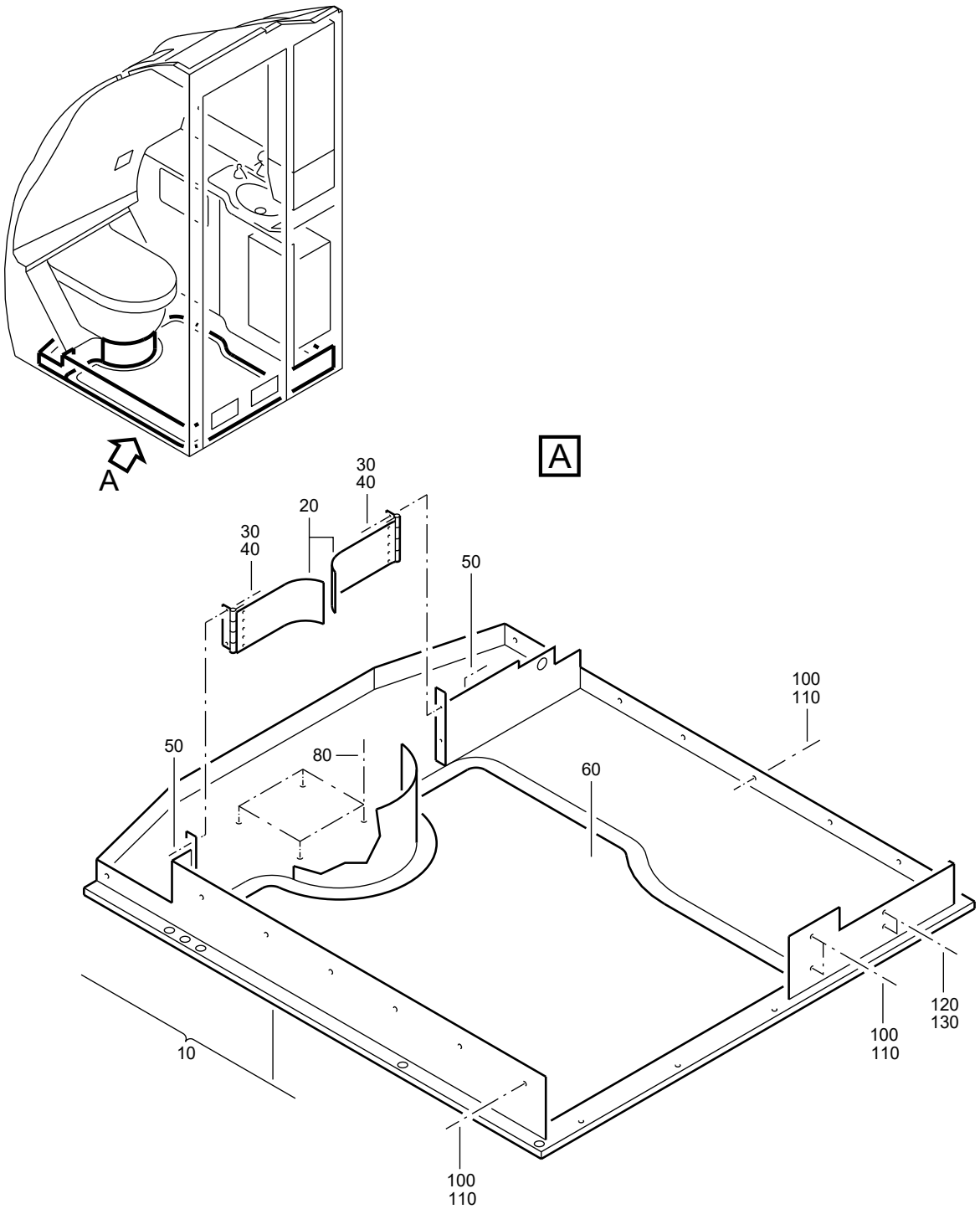

F_PL_254151_13_L_01_00

PAN-FLOOR
Figure 13L/EN254151SHEET13L01

FIG. ITEM	PART NUMBER	AIRLINE STOCK NUMBER	NOMENCLATURE 1234567	EFF CODE	UNITS PER ASSY
13L					
-001A	D2549040500272		. PAN-FLOOR NP used on 090D (25415142B) SEE 25-41-51-42B FOR NHA		RF
-001B	D2549030614072		. PAN-FLOOR NP used on 090H (25415142B) SEE 25-41-51-42B FOR NHA		RF
-001C	D2549010611472		. PAN-FLOOR NP used on 090D (254151420), 090D (25415142C) SEE 25-41-51-420 FOR NHA SEE 25-41-51-42C FOR NHA		RF
-001D	D2549020813072		. PAN-FLOOR NP used on 090L (25415142B), 090E (25415142F) SEE 25-41-51-42B FOR NHA SEE 25-41-51-42F FOR NHA		RF
-001E	D2549020810472		. PAN-FLOOR NP used on 090B (25415142C), 090D (25415142G) SEE 25-41-51-42C FOR NHA SEE 25-41-51-42G FOR NHA		RF
-001F	D2549020813472		. PAN-FLOOR NP used on 090E (25415142C) SEE 25-41-51-42C FOR NHA		RF
-001G	D2549030401672		. PAN-FLOOR NP used on 090B (25415141X), 090H (254151420) SEE 25-41-51-41X FOR NHA SEE 25-41-51-420 FOR NHA		RF
-001H	D2549030406072		. PAN-FLOOR NP used on 090G (25415142C) SEE 25-41-51-42C FOR NHA		RF

- ITEM NOT ILLUSTRATED

FIG. ITEM	PART NUMBER	AIRLINE STOCK NUMBER	NOMENCLATURE 1234567	EFF CODE	UNITS PER ASSY
-001J	D2549020813672		. PAN-FLOOR NP used on 090G (254151420), 090B (25415142E) SEE 25-41-51-420 FOR NHA SEE 25-41-51-42E FOR NHA		RF
-001K	D2549020806472		. PAN-FLOOR NP used on 090B (25415141J), 090G (25415141V), 090D(25415141Y) SEE 25-41-51-41J FOR NHA SEE 25-41-51-41V FOR NHA SEE 25-41-51-41Y FOR NHA		RF
-001L	D2549020405472		. PAN-FLOOR NP used on 090A (25415142B), 090D (25415142D), 090H (25415142G) SEE 25-41-51-42B FOR NHA SEE 25-41-51-42D FOR NHA SEE 25-41-51-42G FOR NHA		RF
-001M	D2549020813272		. PAN-FLOOR NP used on 090E (25415142D) SEE 25-41-51-42D FOR NHA		RF
010A	A225401202-776		. . PAN ASSY-FLOOR used on 001A		001
-010B	A225401202-710		. . PAN ASSY-FLOOR used on 001B		001
-010C	A225401202-618		. . PAN ASSY-FLOOR used on 001C		001
-010D	A225401202-774		. . PAN ASSY-FLOOR used on 001D		001
-010E	A225401202-704		. . PAN ASSY-FLOOR used on 001E		001

- ITEM NOT ILLUSTRATED

FIG. ITEM	PART NUMBER	AIRLINE STOCK NUMBER	NOMENCLATURE 1234567	EFF CODE	UNITS PER ASSY
-010F	A225401202-768		. . PAN ASSY-FLOOR used on 001F		001
-010G	A225401202-802		. . PAN ASSY-FLOOR used on 001G		001
-010H	A225401202-772		. . PAN ASSY-FLOOR used on 001H		001
-010J	A225401202-612		. . PAN ASSY-FLOOR used on 001J		001
-010K	A225401202-786		. . PAN ASSY-FLOOR used on 001K		001
-010L	A225401202-692		. . PAN ASSY-FLOOR used on 001L		001
-010M	A225401202-778		. . PAN ASSY-FLOOR used on 001M		001
020A	A325400202-500		. . . FLAP used on 010A, 010B, 010C, 010D, 010E, 010F, 010H, 010J, 010K, 010L, 010M		002
-020B	A325400202-518		. . . FLAP used on 010G		002
030A	NAS1096-2-9		. . . SCREW BUY PN NAS1801-08-9 used on 010A, 010B, 010C, 010D, 010E, 010F, 010G, 010H, 010J, 010K, 010L, 010M		004
040A	NAS1149CN832R		. . . WASHER used on 010A, 010B, 010C, 010D, 010E, 010F, 010G, 010H, 010J, 010K, 010L, 010M		004

- ITEM NOT ILLUSTRATED

FIG. ITEM	PART NUMBER	AIRLINE STOCK NUMBER	NOMENCLATURE 1234567	EFF CODE	UNITS PER ASSY
050A	MS21042-08		. . . NUT used on 010A, 010B, 010C, 010D, 010E, 010F, 010G, 010H, 010J, 010K, 010L, 010M		004
060A	L0NC0IN2-193		. . . COVERING ASSY-FLOOR, NON TEXTILE used on 010A, 010G SEE SIL 25-131 FOR DET		001
-060B	473675600		. . . COVERING-FLOOR, NON-TEXTILE used on 010B SEE SIL 25-131 FOR DET		001
-060C	S00992-012-00		. . . COVERING-FLOOR, NON-TEXTILE used on 010C SEE SIL 25-131 FOR DET		001
-060D	440497		. . . COVERING-FLOOR, NON-TEXTILE BUY PN 401337 used on 010D SEE SIL 25-131 FOR DET		001
-060E	440501		. . . COVERING-FLOOR, NON-TEXTILE used on 010E SEE SIL 25-131 FOR DET		001
-060F	S3510		. . . COVERING-FLOOR, NON TEXTILE used on 010F		001
-060G	473675620		. . . COVERING-FLOOR, NON-TEXTILE used on 010H SEE SIL 25-131 FOR DET		001

- ITEM NOT ILLUSTRATED

FIG. ITEM	PART NUMBER	AIRLINE STOCK NUMBER	NOMENCLATURE 1234567	EFF CODE	UNITS PER ASSY
-060H	L0NC0IN2-187		. . . COVERING-FLOOR, NON-TEXTILE used on 010J SEE SIL 25-131 FOR DET		001
-060J	S7961		. . . COVERING-FLOOR, NON TEXTILE POST SB 25-1551 used on 010K		001
-060K	477679900		. . . COVERING-FLOOR, NON-TEXTILE used on 010L, 010M SEE SIL 25-131 FOR DET		001
-070A	NAS1835C08		. . . INSERT used on 010A, 010B, 010C, 010D, 010E, 010F, 010G, 010H, 010J, 010K, 010L, 010M		003
080A	NAS1833C4-500		. . . INSERT used on 010A, 010B, 010C, 010D, 010E, 010F, 010G, 010H, 010J, 010K, 010L, 010M		004
-090A	NSA5345-08C		. . . INSERT used on 010A, 010B, 010C, 010D, 010E, 010F, 010G, 010H, 010J, 010K, 010L, 010M		002
100A	NAS1102-08-7		. . SCREW used on 001A, 001B, 001C, 001D, 001E, 001F, 001G, 001H, 001J, 001K, 001L, 001M		008
110A	0-123-000700000		. . WASHER used on 001A, 001B, 001C, 001D, 001E, 001F, 001G, 001H, 001J, 001K, 001L, 001M		008

- ITEM NOT ILLUSTRATED

FIG. ITEM	PART NUMBER	AIRLINE STOCK NUMBER	NOMENCLATURE 1234567	EFF CODE	UNITS PER ASSY
120A	NAS1096-2-9		. . SCREW BUY PN NAS1801-08-9 used on 001A, 001B, 001C, 001D, 001E, 001F, 001G, 001H, 001J, 001K, 001L, 001M		007
130A	ASNA0113-40ADL		. . WASHER used on 001A, 001B, 001C, 001D, 001E, 001F, 001G, 001H, 001J, 001K, 001L, 001M		007

- ITEM NOT ILLUSTRATED

THIS PAGE IS INTENTIONALLY LEFT BLANK

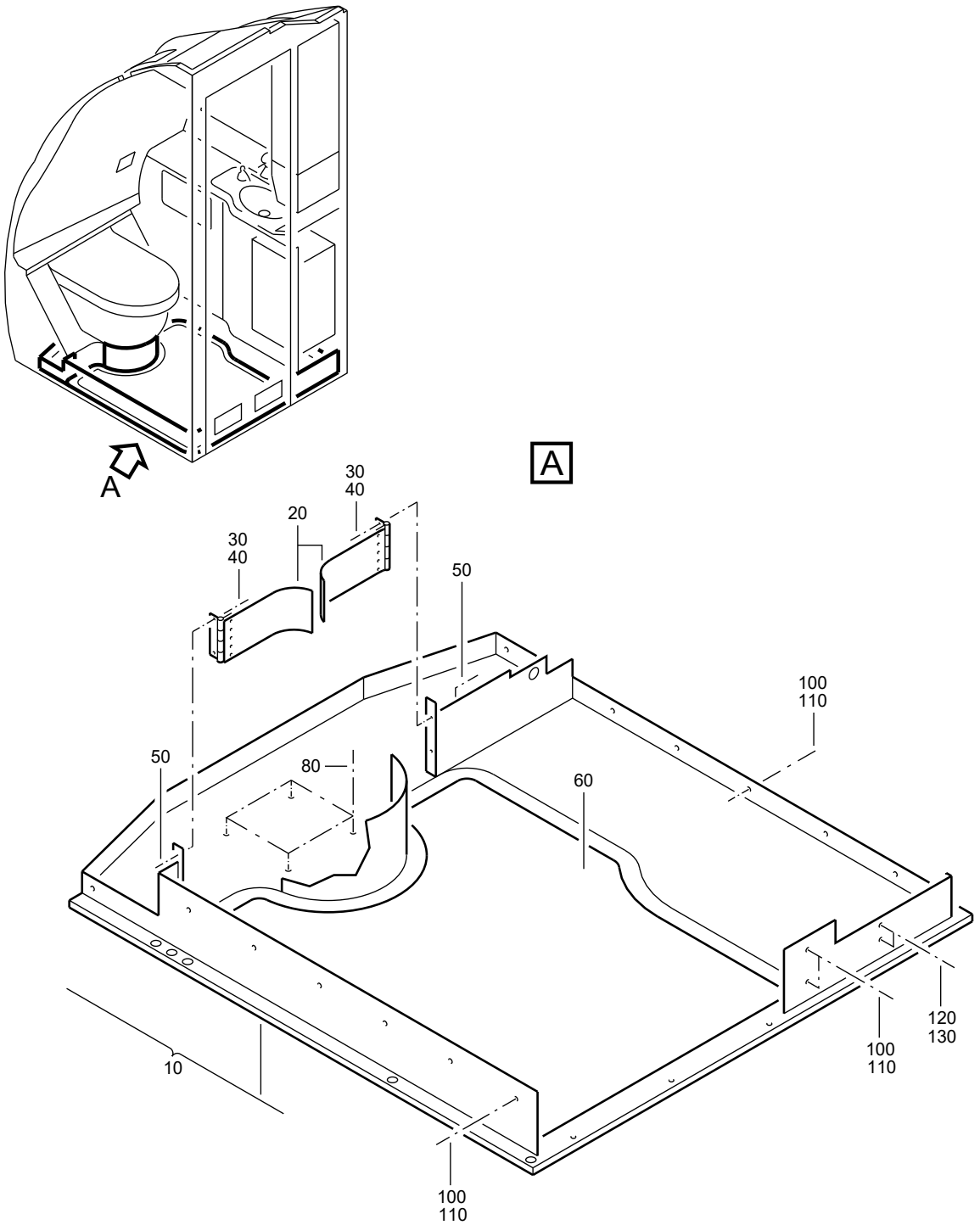

F_PL_254151_13_M_01_00

PAN-FLOOR
Figure 13M/EN254151SHEET13M01

FIG. ITEM	PART NUMBER	AIRLINE STOCK NUMBER	NOMENCLATURE 1234567		EFF CODE	UNITS PER ASSY
13M						
-001A	D2549010400872		. PAN-FLOOR used on 090F (25415142D) SEE 25-41-51-42D FOR NHA	NP		RF
-001B	D2549030408272		. PAN-FLOOR used on 090G (25415142D) SEE 25-41-51-42D FOR NHA	NP		RF
-001C	D2549040500672		. PAN-FLOOR used on 090C (25415142G) SEE 25-41-51-42G FOR NHA	NP		RF
-001D	D2549020400072		. PAN-FLOOR used on 090L (25415142D) SEE 25-41-51-42D FOR NHA	NP		RF
-001E	D2549020805272		. PAN-FLOOR used on 090A (25415142E) SEE 25-41-51-42E FOR NHA	NP		RF
010A	A225401202-782		. . PAN ASSY-FLOOR used on 001A			001
-010B	A225401202-780		. . PAN ASSY-FLOOR used on 001B			001
-010C	A225401202-784		. . PAN ASSY-FLOOR used on 001C			001
-010D	A225401202-756		. . PAN ASSY-FLOOR used on 001D			001
-010E	A225401202-720		. . PAN ASSY-FLOOR used on 001E			001
020A	A325400202-500		. . . FLAP used on 010A, 010B, 010C, 010D			002
-020B	A325400202-514		. . . FLAP used on 010E			002

- ITEM NOT ILLUSTRATED

FIG. ITEM	PART NUMBER	AIRLINE STOCK NUMBER	NOMENCLATURE 1234567	EFF CODE	UNITS PER ASSY
030A	NAS1096-2-9		. . . SCREW BUY PN NAS1801-08-9 used on 010A, 010B, 010C, 010D, 010E		004
040A	NAS1149CN832R		. . . WASHER used on 010A, 010B, 010C, 010D, 010E		004
050A	MS21042-08		. . . NUT used on 010A, 010B, 010C, 010D, 010E		004
060A	440501		. . . COVERING-FLOOR, NON-TEXTILE used on 010A SEE SIL 25-131 FOR DET		001
-060B	L0NC0IN2-183		. . . COVERING-FLOOR, NON-TEXTILE used on 010B SEE SIL 25-131 FOR DET		001
-060C	497H6770		. . . COVERING-FLOOR, NON TEXTILE used on 010C SEE SIL 25-131 FOR DET		001
-060D	SBM004F		. . . COVERING-FLOOR, NON TEXTILE used on 010E		001
-070A	NAS1835C08		. . . INSERT used on 010A, 010B, 010C, 010D, 010E		003
080A	NAS1833C4-500		. . . INSERT used on 010A, 010B, 010C, 010D, 010E		004

- ITEM NOT ILLUSTRATED

FIG. ITEM	PART NUMBER	AIRLINE STOCK NUMBER	NOMENCLATURE 1234567	EFF CODE	UNITS PER ASSY
-090A	NSA5345-08C		. . . INSERT used on 010A, 010B, 010C, 010D, 010E		002
100A	NAS1102-08-7		. . SCREW used on 001A, 001B, 001C, 001D, 001E		008
110A	0-123-000700000		. . WASHER used on 001A, 001B, 001C, 001D, 001E		008
120A	NAS1096-2-9		. . SCREW BUY PN NAS1801-08-9 used on 001A, 001B, 001C, 001D, 001E		007
130A	ASNA0113-40ADL		. . WASHER used on 001A, 001B, 001C, 001D, 001E		007

- ITEM NOT ILLUSTRATED

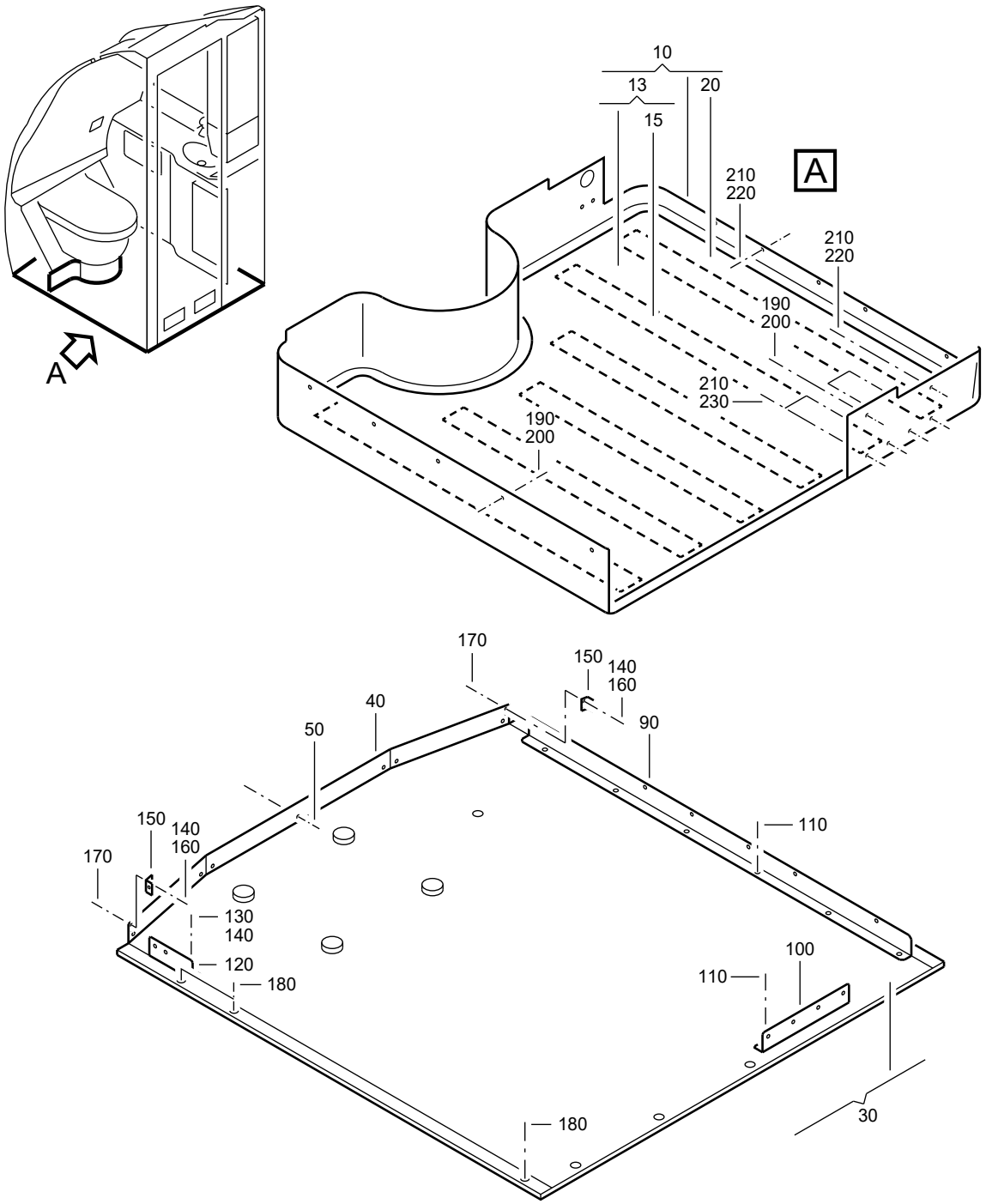

F_PL_254151_13_N_01_00

PAN-FLOOR
Figure 13N/EN254151SHEET13N01

FIG. ITEM	PART NUMBER	AIRLINE STOCK NUMBER	NOMENCLATURE 1234567	EFF CODE	UNITS PER ASSY
13N					
-001A	D2549020401272		. PAN-FLOOR NP used on 090F (25415142E), 090B (25415142P) SEE 25-41-51-42E FOR NHA SEE 25-41-51-42P FOR NHA		RF
-001B	D2549030410272		. PAN-FLOOR NP used on 090H (25415142F), 090D (25415142L), 090E (25415142N), 090G (25415142S), 090B (25415142T) SEE 25-41-51-42F FOR NHA SEE 25-41-51-42L FOR NHA SEE 25-41-51-42N FOR NHA SEE 25-41-51-42S FOR NHA SEE 25-41-51-42T FOR NHA		RF
-001C	D2549020404072		. PAN-FLOOR NP used on 090J (25415142F) SEE 25-41-51-42F FOR NHA		RF
-001D	D2549030410072		. PAN-FLOOR NP used on 090K (25415142F), 090L (25415142G), 090B(25415142H), 090D (25415142K), 090E (25415142Q), 090C(25415142S) SEE 25-41-51-42F FOR NHA SEE 25-41-51-42G FOR NHA SEE 25-41-51-42H FOR NHA SEE 25-41-51-42K FOR NHA SEE 25-41-51-42Q FOR NHA SEE 25-41-51-42S FOR NHA		RF

- ITEM NOT ILLUSTRATED

FIG. ITEM	PART NUMBER	AIRLINE STOCK NUMBER	NOMENCLATURE 1234567	EFF CODE	UNITS PER ASSY
-001E	D2549020403272		. PAN-FLOOR NP used on 090A (25415142G), 090H (25415142H), 090J (25415142L) SEE 25-41-51-42G FOR NHA SEE 25-41-51-42H FOR NHA SEE 25-41-51-42L FOR NHA		RF
-001F	D2549030409672		. PAN-FLOOR NP PRE VSB A2-254-25-106 used on 090J (25415142E), 090B (25415142G), 090D(25415142H), 090F (25415142K), 090C (25415142L), 090A(25415142M), 090C (25415142N), 090C (25415142P), 090A(25415142Q), 090F (25415142S), 090F (25415142T), 090G(25415142U) SEE 25-41-51-42E FOR NHA SEE 25-41-51-42G FOR NHA SEE 25-41-51-42H FOR NHA SEE 25-41-51-42K FOR NHA SEE 25-41-51-42L FOR NHA SEE 25-41-51-42M FOR NHA SEE 25-41-51-42N FOR NHA SEE 25-41-51-42P FOR NHA SEE 25-41-51-42Q FOR NHA SEE 25-41-51-42S FOR NHA SEE 25-41-51-42T FOR NHA SEE 25-41-51-42U FOR NHA		RF

- ITEM NOT ILLUSTRATED

FIG. ITEM	PART NUMBER	AIRLINE STOCK NUMBER	NOMENCLATURE 1234567	EFF CODE	UNITS PER ASSY
-001G	D2549020400672		. PAN-FLOOR NP used on 090F (25415142G), 090L (25415142K), 090J(25415142N), 090C (25415142Q), 090G (25415142Q), 090C(25415142R), 090D (25415142S), 090D (25415142T) SEE 25-41-51-42G FOR NHA SEE 25-41-51-42K FOR NHA SEE 25-41-51-42N FOR NHA SEE 25-41-51-42Q FOR NHA SEE 25-41-51-42Q FOR NHA SEE 25-41-51-42R FOR NHA SEE 25-41-51-42S FOR NHA SEE 25-41-51-42T FOR NHA		RF
-001H	D2549020400872		. PAN-FLOOR NP used on 090G (25415142G) SEE 25-41-51-42G FOR NHA		RF
-001J	D2549020807272		. PAN-FLOOR NP used on 090G (25415142E) SEE 25-41-51-42E FOR NHA		RF
-001K	D2549020402672		. PAN-FLOOR NP PRE VSB A2-254-25-130 used on 090H (25415142E) SEE 25-41-51-42E FOR NHA		RF
-001L	D2549030409072		. PAN-FLOOR NP used on 090K (25415142E) SEE 25-41-51-42E FOR NHA		RF
-001M	D2549020402272		. PAN-FLOOR NP used on 090J (25415142G), 090D (25415142J), 090G(25415142K) SEE 25-41-51-42G FOR NHA SEE 25-41-51-42J FOR NHA SEE 25-41-51-42K FOR NHA		RF

- ITEM NOT ILLUSTRATED

FIG. ITEM	PART NUMBER	AIRLINE STOCK NUMBER	NOMENCLATURE 1234567	EFF CODE	UNITS PER ASSY
-001N	R22540168900472		. PAN-FLOOR NP POST VSB A2-254-25-106 used on 090K (25415142L), 090J (25415142T) SEE 25-41-51-42L FOR NHA SEE 25-41-51-42T FOR NHA		RF
-001P	R22540119606472		. PAN-FLOOR NP POST VSB A2-254-25-130 used on 090M (25415142E) SEE 25-41-51-42E FOR NHA		RF
010A	A225401209-516		. . PAN ASSY-FLOOR used on 001A		001
-010B	A225401209-524		. . PAN ASSY-FLOOR used on 001B		001
-010C	A225401209-518		. . PAN ASSY-FLOOR used on 001C		001
-010D	A225401209-522		. . PAN ASSY-FLOOR used on 001D		001
-010E	A225401209-534		. . PAN ASSY-FLOOR used on 001E		001
-010F	A225401209-506		. . PAN ASSY-FLOOR PRE VSB A2-254-25-106 used on 001F		001
-010G	A225401209-500		. . PAN ASSY-FLOOR used on 001G		001
-010H	A225401209-502		. . PAN ASSY-FLOOR used on 001H		001
-010J	A225401209-504		. . PAN ASSY-FLOOR used on 001J		001

- ITEM NOT ILLUSTRATED

FIG. ITEM	PART NUMBER	AIRLINE STOCK NUMBER	NOMENCLATURE 1234567	EFF CODE	UNITS PER ASSY
-010K	A225401209-508		. . PAN ASSY-FLOOR PRE VSB A2-254-25-130 used on 001K		001
-010L	A225401209-512		. . PAN ASSY-FLOOR used on 001L		001
-010M	A225401209-510		. . PAN ASSY-FLOOR used on 001M		001
-010N	A225401209-642		. . PAN ASSY-FLOOR POST VSB A2-254-25-106 used on 001N		001
-010P	A225401209-646		. . PAN ASSY-FLOOR POST VSB A2-254-25-130 used on 001P		001
013A	A225401209-000		. . . PAN-FLOOR used on 010A, 010B, 010C, 010D, 010E, 010F, 010G, 010H, 010J, 010K, 010L, 010M, 010N, 010P		001
015A	SC0TCH4930-50		. . . . TAPE-ADHESIVE USE AS REQUIRED REQUIRED LENGHT 3500 MM SC0TCH493050MMX33M used on 013A		AR
020A	401365		. . . COVERING-FLOOR, NON-TEXTILE used on 010A, 010M SEE SIL 25-131 FOR DET		001
-020B	L0NC0IN2-183		. . . COVERING-FLOOR, NON-TEXTILE used on 010B SEE SIL 25-131 FOR DET		001

- ITEM NOT ILLUSTRATED

FIG. ITEM	PART NUMBER	AIRLINE STOCK NUMBER	NOMENCLATURE 1234567	EFF CODE	UNITS PER ASSY
-020C	AIRFL00R97-8-15		. . . COVERING-FLOOR, NON-TEXTILE BUY PN AFR1550R88 used on 010C		001
-020D	473649721		. . . COVERING-FLOOR, NON TEXTILE used on 010D		001
-020E	473675620		. . . COVERING-FLOOR, NON-TEXTILE PRE VSB A2-254-25-106 used on 010E, 010F SEE SIL 25-131 FOR DET		001
-020F	S00992-012-00		. . . COVERING-FLOOR, NON-TEXTILE used on 010G SEE SIL 25-131 FOR DET		001
-020G	477678300		. . . COVERING-FLOOR, NON-TEXTILE BUY PN 497B6783 used on 010H, 010J SEE SIL 25-131 FOR DET		001
-020H	FL01-0274Y3V1		. . . COVERING-FLOOR, NON-TEXTILE PRE VSB A2-254-25-130 used on 010K		001
-020J	L0NC0IN2-191		. . . COVERING-FLOOR, NON-TEXTILE used on 010L SEE SIL 25-131 FOR DET		001
-020K	S017403		. . . COVERING-FLOOR, NON-TEXTILE POST VSB A2-254-25-106 used on 010N		001

- ITEM NOT ILLUSTRATED

FIG. ITEM	PART NUMBER	AIRLINE STOCK NUMBER	NOMENCLATURE 1234567	EFF CODE	UNITS PER ASSY
-020L	S125400206-086		. . . COVERING-FLOOR, NON-TEXTILE POST VSB A2-254-25-130 used on 010P		001
-022A	FLOORSIL2AI8-15		. . . SEALANT POST VSB A2-254-25-106 FLOORSIL2-AI8-15 used on 010N		AR
-022B	FLOORSIL2AI8-8		. . . SEALANT POST VSB A2-254-25-130 FLOORSIL2-AI8-8 used on 010P		AR
-024A	ABS5768A500		. . . TAPE-ADHESIVE POST VSB A2-254-25-130 POST VSB A2-254-25-106 used on 010N, 010P SCOTCH 950 NBC/ABS 5768A-500		AR
030A	A225401207-500		. . PANEL ASSY-FLOOR used on 001A, 001B, 001C, 001D, 001E, 001F, 001G, 001H, 001J, 001K, 001L, 001M, 001N, 001P		001
040A	A225400206-200		. . . STRIP-END,FLOOR PANEL used on 030A		001
050A	DAN298-4030		. . . SCREW used on 030A		004
-060A	NAS1833C3-370		. . . INSERT used on 030A		002
-070A	NAS1835C08		. . . INSERT used on 030A		020

- ITEM NOT ILLUSTRATED

FIG. ITEM	PART NUMBER	AIRLINE STOCK NUMBER	NOMENCLATURE 1234567	EFF CODE	UNITS PER ASSY
-080A	NAS1833C4-500		. . . INSERT used on 030A		004
090A	A225400217-200		. . . ANGLE used on 030A		001
100A	A225400217-204		. . . ANGLE used on 030A		001
110A	MS24693C48		. . . SCREW used on 030A		010
120A	A225400217-206		. . . ANGLE used on 030A		001
130A	NAS1096-2-6		. . . SCREW BUY PN NAS1801-08-6 used on 030A		002
140A	ASNA0113-40ADL		. . . WASHER used on 030A		010
150A	A225400217-212		. . . ANGLE used on 030A		002
160A	NAS1096-2-7		. . . SCREW BUY PN NAS1801-08-7 used on 030A		004
170A	MS21042-08		. . . NUT used on 030A		004
180A	A225400234-214		. . . SCREW used on 030A		003
190A	NAS1102-08-10		. . SCREW used on 001A, 001B, 001C, 001D, 001E, 001F, 001G, 001H, 001J, 001K, 001L, 001M, 001N, 001P		006

- ITEM NOT ILLUSTRATED

FIG. ITEM	PART NUMBER	AIRLINE STOCK NUMBER	NOMENCLATURE 1234567	EFF CODE	UNITS PER ASSY
200A	0-123-000700000		. . WASHER used on 001A, 001B, 001C, 001D, 001E, 001F, 001G, 001H, 001J, 001K, 001L, 001M, 001N, 001P		006
210A	NAS1096-2-9		. . SCREW BUY PN NAS1801-08-9 used on 001A, 001B, 001C, 001D, 001E, 001F, 001G, 001H, 001J, 001K, 001L, 001M, 001N, 001P		010
220A	ASNA0113-40ADL		. . WASHER used on 001A, 001B, 001C, 001D, 001E, 001F, 001G, 001H, 001J, 001K, 001L, 001M, 001N, 001P		006
230A	NAS1149CN832R		. . WASHER used on 001A, 001B, 001C, 001D, 001E, 001F, 001G, 001H, 001J, 001K, 001L, 001M, 001N, 001P		004

- ITEM NOT ILLUSTRATED

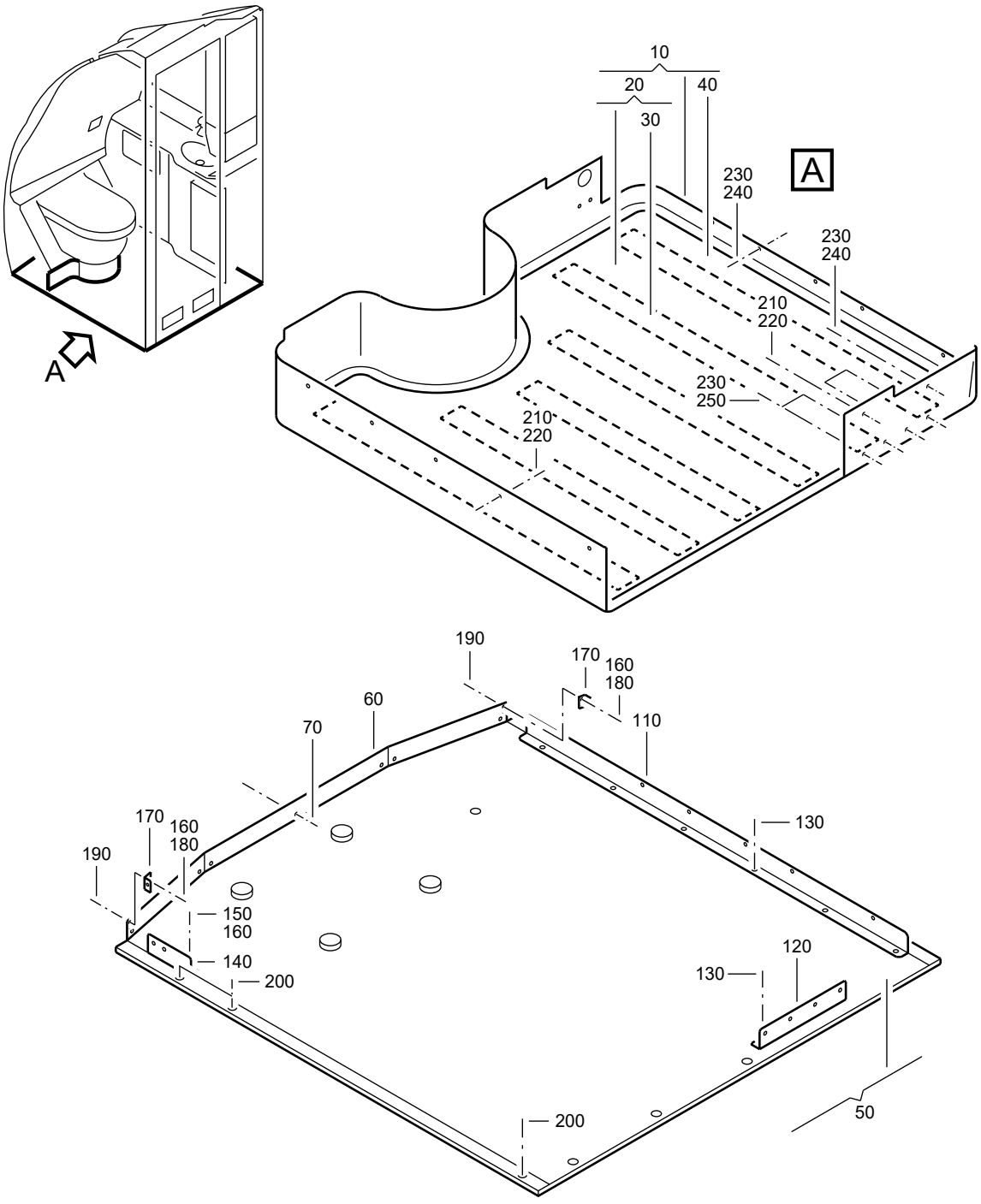

F_PL_254151_13_P_01_00

PAN-FLOOR
Figure 13P/EN254151SHEET13P01

FIG. ITEM	PART NUMBER	AIRLINE STOCK NUMBER	NOMENCLATURE 1234567		EFF CODE	UNITS PER ASSY
13P						
-001A	D2549010610672		. PAN-FLOOR used on 090L (25415142E), 090K (25415142K) SEE 25-41-51-42E FOR NHA SEE 25-41-51-42K FOR NHA	NP		RF
-001B	D2549030409472		. PAN-FLOOR PRE VSB A2-254-25-131 used on 090A (25415142H), 090B (25415142M) SEE 25-41-51-42H FOR NHA SEE 25-41-51-42M FOR NHA	NP		RF
-001C	D2549010401072		. PAN-FLOOR used on 090C (25415142H), 090H (25415142M) SEE 25-41-51-42H FOR NHA SEE 25-41-51-42M FOR NHA	NP		RF
-001D	D2549040500472		. PAN-FLOOR used on 090E (25415142H), 090E (25415142L), 090G (25415142M) SEE 25-41-51-42H FOR NHA SEE 25-41-51-42L FOR NHA SEE 25-41-51-42M FOR NHA	NP		RF
-001E	D2549020406472		. PAN-FLOOR used on 090F (25415142H) SEE 25-41-51-42H FOR NHA	NP		RF
-001F	D2549010402272		. PAN-FLOOR used on 090G (25415142H) SEE 25-41-51-42H FOR NHA	NP		RF

- ITEM NOT ILLUSTRATED

FIG. ITEM	PART NUMBER	AIRLINE STOCK NUMBER	NOMENCLATURE 1234567		EFF CODE	UNITS PER ASSY
-001G	D2549040500872		. PAN-FLOOR used on 090J (25415142H), 090J (25415142K), 090F(25415142Q) SEE 25-41-51-42H FOR NHA SEE 25-41-51-42K FOR NHA SEE 25-41-51-42Q FOR NHA	NP		RF
-001H	D2549030411472		. PAN-FLOOR used on 090K (25415142H), 090A (25415142L), 090J (25415142Q), 090F (25415142U) SEE 25-41-51-42H FOR NHA SEE 25-41-51-42L FOR NHA SEE 25-41-51-42Q FOR NHA SEE 25-41-51-42U FOR NHA	NP		RF
-001J	D2549020407072		. PAN-FLOOR PRE VSB A2-254-25-130 used on 090B (25415142J) SEE 25-41-51-42J FOR NHA	NP		RF
-001K	D2549020401672		. PAN-FLOOR used on 090L (25415142H), 090B (25415142Q), 090A(25415142S), 090B (25415142U) SEE 25-41-51-42H FOR NHA SEE 25-41-51-42Q FOR NHA SEE 25-41-51-42S FOR NHA SEE 25-41-51-42U FOR NHA	NP		RF
-001L	D2549020406872		. PAN-FLOOR used on 090A (25415142K) SEE 25-41-51-42K FOR NHA	NP		RF
-001M	D2549030410672		. PAN-FLOOR used on 090B (25415142K) SEE 25-41-51-42K FOR NHA	NP		RF

- ITEM NOT ILLUSTRATED

FIG. ITEM	PART NUMBER	AIRLINE STOCK NUMBER	NOMENCLATURE 1234567	EFF CODE	UNITS PER ASSY
-001N	R22540164300872		. PAN-FLOOR NP POST VSB A2-254-25-131 used on 090L (25415142M) SEE 25-41-51-42M FOR NHA		RF
-001P	R22540119606672		. PAN-FLOOR NP POST VSB A2-254-25-130 used on 090J (25415142J) SEE 25-41-51-42J FOR NHA		RF
010A	A225401209-514		. . PAN ASSY-FLOOR used on 001A		001
-010B	A225401209-526		. . PAN ASSY-FLOOR PRE VSB A2-254-25-131 used on 001B		001
-010C	A225401209-530		. . PAN ASSY-FLOOR used on 001C, 001E		001
-010D	A225401209-550		. . PAN ASSY-FLOOR used on 001D		001
-010E	A225401209-532		. . PAN ASSY-FLOOR used on 001F		001
-010F	A225401209-528		. . PAN ASSY-FLOOR used on 001G		001
-010G	A225401209-536		. . PAN ASSY-FLOOR used on 001H		001
-010H	A225401209-542		. . PAN ASSY-FLOOR PRE VSB A2-254-25-130 used on 001J		001
-010J	A225401209-544		. . PAN ASSY-FLOOR used on 001K		001
-010K	A225401209-546		. . PAN ASSY-FLOOR used on 001L		001

- ITEM NOT ILLUSTRATED

FIG. ITEM	PART NUMBER	AIRLINE STOCK NUMBER	NOMENCLATURE 1234567	EFF CODE	UNITS PER ASSY
-010L	A225401209-626		. . PAN ASSY-FLOOR POST SB 25-1482 used on 001M		001
-010M	A225401209-938		. . PAN ASSY-FLOOR POST VSB A2-254-25-131 used on 001N		001
-010N	A225401209-646		. . PAN ASSY-FLOOR POST VSB A2-254-25-130 used on 001P		001
020A	A225401209-000		. . . PAN-FLOOR used on 010A, 010B, 010F, 010G, 010H, 010K, 010L, 010M, 010N		001
-020B	A225401209-016		. . . PAN-FLOOR used on 010D		001
-020C	A225401209-010		. . . PAN-FLOOR used on 010C		001
-020D	A225401209-012		. . . PAN-FLOOR used on 010E		001
-020E	A225401209-004		. . . PAN-FLOOR used on 010J		001
030A	SC0TCH4930-50		. . . . TAPE-ADHESIVE PRE VSB A2-254-25-131 USE AS REQUIRED SC0TCH493050MMX33M used on 020A, 020B, 020C, 020D, 020E		AR
-030B	ABS5768A500		. . . . TAPE-ADHESIVE POST VSB A2-254-25-131 used on 020A SCOTCH 950 NBC/ABS 5768A-500		AR

- ITEM NOT ILLUSTRATED

FIG. ITEM	PART NUMBER	AIRLINE STOCK NUMBER	NOMENCLATURE 1234567	EFF CODE	UNITS PER ASSY
040A	477679800		. . . COVERING-FLOOR, NON-TEXTILE used on 010A SEE SIL 25-131 FOR DET		001
-040B	401330		. . . COVERING-FLOOR, NON TEXTILE PRE VSB A2-254-25-131 used on 010B SEE SIL 25-131 FOR DET		001
-040C	L0NC0IN2-191		. . . COVERING-FLOOR, NON-TEXTILE used on 010C SEE SIL 25-131 FOR DET		001
-040D	L0NC0IN2-193		. . . COVERING ASSY-FLOOR, NON TEXTILE used on 010D SEE SIL 25-131 FOR DET		001
-040E	S6340		. . . COVERING-FLOOR, NON TEXTILE used on 010E		001
-040F	497H6770		. . . COVERING-FLOOR, NON TEXTILE used on 010F SEE SIL 25-131 FOR DET		001
-040G	L0NC0IN2-187		. . . COVERING-FLOOR, NON-TEXTILE used on 010G SEE SIL 25-131 FOR DET		001
-040H	FL01-0274Y3V1		. . . COVERING-FLOOR, NON-TEXTILE PRE VSB A2-254-25-130 used on 010H		001

- ITEM NOT ILLUSTRATED

FIG. ITEM	PART NUMBER	AIRLINE STOCK NUMBER	NOMENCLATURE 1234567	EFF CODE	UNITS PER ASSY
-040J	S3595		. . . COVERING-FLOOR, NON-TEXTILE used on 010J		001
-040K	473649800		. . . COVERING-FLOOR, NON-TEXTILE used on 010K SEE SIL 25-131 FOR DET		001
-040L	S8426		. . . COVERING-FLOOR, NON TEXTILE POST SB 25-1482 used on 010L		001
-040M	S125400206-188		. . . COVERING-FLOOR, NON TEXTILE POST VSB A2-254-25-131 used on 010M		001
-040N	S125400206-086		. . . COVERING-FLOOR, NON-TEXTILE POST VSB A2-254-25-130 used on 010N		001
-045A	FLOORSIL2AI8-15		. . . SEALANT POST VSB A2-254-25-131 used on 010M FLOORSIL2-AI8-15		AR
-045B	FLOORSIL2AI8-8		. . . SEALANT POST VSB A2-254-25-130 used on 010N FLOORSIL2-AI8-8		AR
050A	A225401207-500		. . PANEL ASSY-FLOOR used on 001A, 001B, 001D, 001E, 001F, 001G, 001H, 001J, 001K, 001L, 001M, 001N, 001P		001
-050B	A225401207-510		. . PANEL ASSY-FLOOR used on 001C		001

- ITEM NOT ILLUSTRATED

FIG. ITEM	PART NUMBER	AIRLINE STOCK NUMBER	NOMENCLATURE 1234567	EFF CODE	UNITS PER ASSY
060A	A225400206-200		. . . STRIP-END,FLOOR PANEL used on 050A, 050B		001
070A	DAN298-4030		. . . SCREW used on 050A, 050B		004
-080A	NAS1833C3-370		. . . INSERT used on 050A, 050B		002
-090A	NAS1835C08		. . . INSERT used on 050A, 050B		020
-100A	NAS1833C4-500		. . . INSERT used on 050A, 050B		004
110A	A225400217-200		. . . ANGLE used on 050A, 050B		001
120A	A225400217-204		. . . ANGLE used on 050A, 050B		001
130A	MS24693C48		. . . SCREW used on 050A, 050B		010
140A	A225400217-206		. . . ANGLE used on 050A, 050B		001
150A	NAS1096-2-6		. . . SCREW BUY PN NAS1801-08-6 used on 050A, 050B		002
160A	ASNA0113-40ADL		. . . WASHER used on 050A, 050B		010
170A	A225400217-212		. . . ANGLE used on 050A, 050B		002
180A	NAS1096-2-7		. . . SCREW BUY PN NAS1801-08-7 used on 050A, 050B		004

- ITEM NOT ILLUSTRATED

FIG. ITEM	PART NUMBER	AIRLINE STOCK NUMBER	NOMENCLATURE 1234567	EFF CODE	UNITS PER ASSY
190A	MS21042-08		. . . NUT used on 050A, 050B		004
200A	A225400234-214		. . . SCREW used on 050A, 050B		003
210A	NAS1102-08-10		. . SCREW used on 001A, 001B, 001C, 001D, 001E, 001F, 001G, 001H, 001J, 001K, 001L, 001M, 001N, 001P		006
220A	0-123-000700000		. . WASHER used on 001A, 001B, 001C, 001D, 001E, 001F, 001G, 001H, 001J, 001K, 001L, 001M, 001N, 001P		006
230A	NAS1096-2-9		. . SCREW BUY PN NAS1801-08-9 used on 001A, 001B, 001C, 001D, 001E, 001F, 001G, 001H, 001J, 001K, 001L, 001M, 001N, 001P		010
240A	ASNA0113-40ADL		. . WASHER used on 001A, 001B, 001C, 001D, 001E, 001F, 001G, 001H, 001J, 001K, 001L, 001M, 001N, 001P		006
250A	NAS1149CN832R		. . WASHER used on 001A, 001B, 001C, 001D, 001E, 001F, 001G, 001H, 001J, 001K, 001L, 001M, 001N, 001P		004

- ITEM NOT ILLUSTRATED

THIS PAGE IS INTENTIONALLY LEFT BLANK

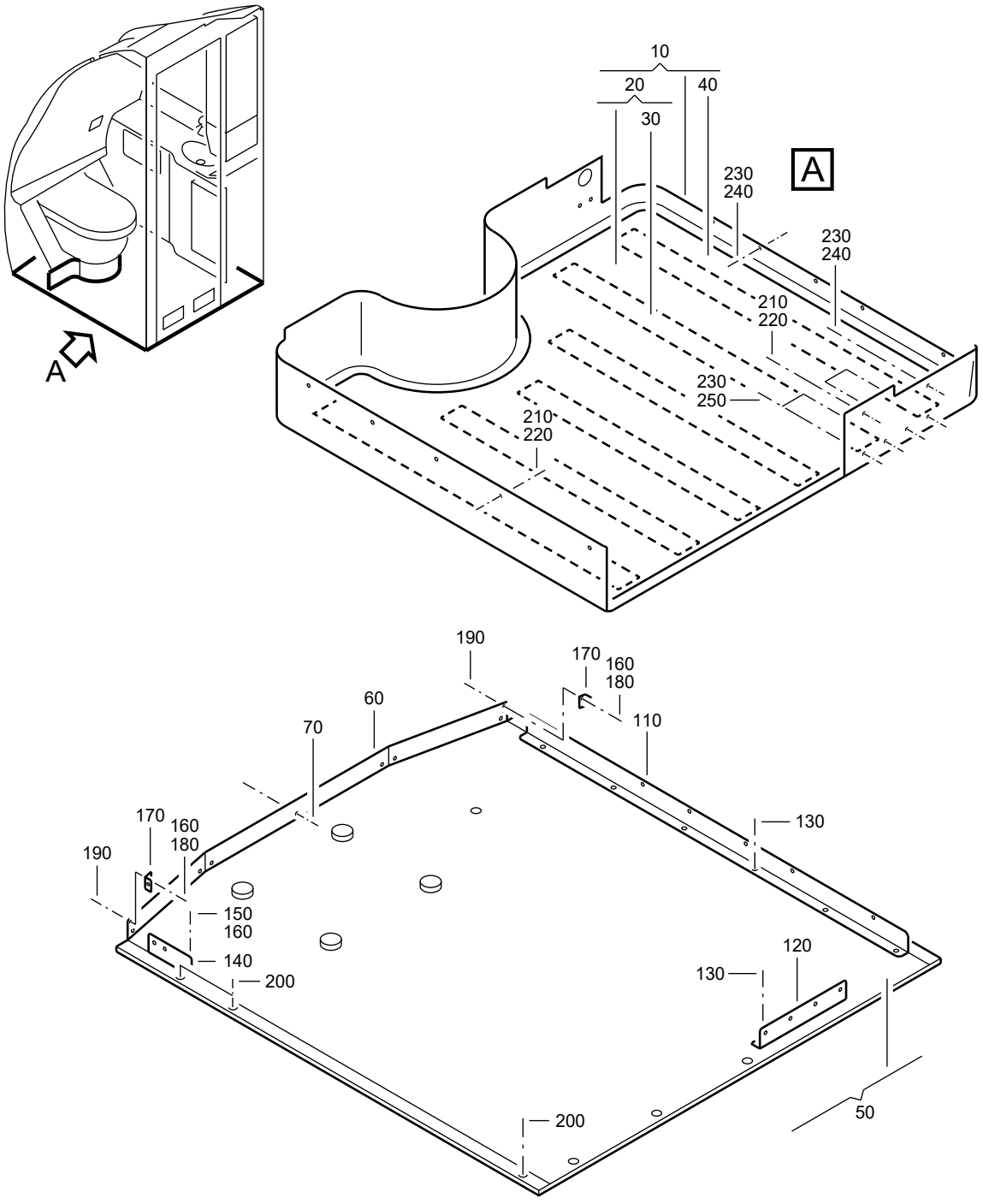

F_PL_254151_13_Q_01_00

PAN-FLOOR
Figure 13Q/EN254151SHEET13Q01

FIG. ITEM	PART NUMBER	AIRLINE STOCK NUMBER	NOMENCLATURE 1234567		EFF CODE	UNITS PER ASSY
13Q						
-001A	D2549020408872		. PAN-FLOOR used on 090C (25415142K) SEE 25-41-51-42K FOR NHA	NP		RF
-001B	D2549030410872		. PAN-FLOOR used on 090H (25415142K), 090H (25415142L), 090B (25415142R), 090G (25415142T) SEE 25-41-51-42K FOR NHA SEE 25-41-51-42L FOR NHA SEE 25-41-51-42R FOR NHA SEE 25-41-51-42T FOR NHA	NP		RF
-001C	D2549010401472		. PAN-FLOOR used on 090C (25415142J), 090F (25415142N), 090A(25415142P) SEE 25-41-51-42J FOR NHA SEE 25-41-51-42N FOR NHA SEE 25-41-51-42P FOR NHA	NP		RF
-001D	D2549020402472		. PAN-FLOOR used on 090B (25415142L) SEE 25-41-51-42L FOR NHA	NP		RF
-001E	D2549020409272		. PAN-FLOOR used on 090F (25415142L), 090C (25415142U) SEE 25-41-51-42L FOR NHA SEE 25-41-51-42U FOR NHA	NP		RF
-001F	D2549010401672		. PAN-FLOOR used on 090E (25415142J) SEE 25-41-51-42J FOR NHA	NP		RF
-001G	D2549020409072		. PAN-FLOOR PRE VSB A2-254-25-130 used on 090F (25415142J), 090F (25415142P) SEE 25-41-51-42J FOR NHA SEE 25-41-51-42P FOR NHA	NP		RF

- ITEM NOT ILLUSTRATED

FIG. ITEM	PART NUMBER	AIRLINE STOCK NUMBER	NOMENCLATURE 1234567		EFF CODE	UNITS PER ASSY
-001H	D2549040501672		. PAN-FLOOR used on 090C (25415142M) SEE 25-41-51-42M FOR NHA	NP		RF
-001J	D2549010403872		. PAN-FLOOR used on 090D (25415142M) SEE 25-41-51-42M FOR NHA	NP		RF
-001K	D2549030413072		. PAN-FLOOR used on 090E (25415142M), 090F (25415142R) SEE 25-41-51-42M FOR NHA SEE 25-41-51-42R FOR NHA	NP		RF
-001L	D2549020409872		. PAN-FLOOR used on 090A (25415142N), 090E (25415142S) SEE 25-41-51-42N FOR NHA SEE 25-41-51-42S FOR NHA	NP		RF
-001M	D2549010613672		. PAN-FLOOR used on 090G (25415142B), 090H (25415142N) SEE 25-41-51-42B FOR NHA SEE 25-41-51-42N FOR NHA	NP		RF
-001N	R22540119606872		. PAN-FLOOR POST VSB A2-254-25-130 used on 090K (25415142J), 090G (25415142P) SEE 25-41-51-42J FOR NHA SEE 25-41-51-42P FOR NHA	NP		RF
010A	A225401209-552		. . PAN ASSY-FLOOR used on 001A			001
-010B	A225401209-540		. . PAN ASSY-FLOOR used on 001B			001
-010C	A225401209-548		. . PAN ASSY-FLOOR used on 001C			001

- ITEM NOT ILLUSTRATED

FIG. ITEM	PART NUMBER	AIRLINE STOCK NUMBER	NOMENCLATURE 1234567	EFF CODE	UNITS PER ASSY
-010D	A225401209-554		. . PAN ASSY-FLOOR used on 001D		001
-010E	A225401209-560		. . PAN ASSY-FLOOR used on 001E		001
-010F	A225401209-556		. . PAN ASSY-FLOOR used on 001F		001
-010G	A225401209-562		. . PAN ASSY-FLOOR PRE VSB A2-254-25-130 used on 001G		001
-010H	A225401209-570		. . PAN ASSY-FLOOR used on 001H		001
-010J	A225401209-558		. . PAN ASSY-FLOOR used on 001J		001
-010K	A225401209-564		. . PAN ASSY-FLOOR used on 001K		001
-010L	A225401209-568		. . PAN ASSY-FLOOR used on 001L		001
-010N	A225401209-646		. . PAN ASSY-FLOOR POST VSB A2-254-25-130 used on 001N		001
020A	A225401209-000		. . . PAN-FLOOR used on 010A, 010C, 010E, 010F, 010G, 010H, 010K, 010L, 010M, 010N		001
-020B	A225401209-008		. . . PAN-FLOOR used on 010B		001
-020C	A225401209-014		. . . PAN-FLOOR used on 010D		001
-020D	A225401209-006		. . . PAN-FLOOR used on 010J		001

- ITEM NOT ILLUSTRATED

FIG. ITEM	PART NUMBER	AIRLINE STOCK NUMBER	NOMENCLATURE 1234567	EFF CODE	UNITS PER ASSY
030A	SC0TCH4930-50		. . . . TAPE-ADHESIVE USE AS REQUIRED REQUIRED LENGTH 3500 MM SC0TCH493050MMX33M used on 020A, 020B, 020C, 020D		AR
040A	473C6529		. . . COVERING-FLOOR, NON TEXTILE used on 010A		001
-040B	SBM004F		. . . COVERING-FLOOR, NON TEXTILE used on 010B		001
-040C	S07489-001P2		. . . COVERING-FLOOR, NON-TEXTILE used on 010C		001
-040D	401337		. . . COVERING-FLOOR, NON-TEXTILE used on 010D SEE SIL 25-131 FOR DET		001
-040E	473675620		. . . COVERING-FLOOR, NON-TEXTILE used on 010E SEE SIL 25-131 FOR DET		001
-040F	S00992-012-00		. . . COVERING-FLOOR, NON-TEXTILE used on 010F SEE SIL 25-131 FOR DET		001
-040G	FL01S0406F3N1		. . . COVERING-FLOOR, NON TEXTILE PRE VSB A2-254-25-130 used on 010G		001

- ITEM NOT ILLUSTRATED

FIG. ITEM	PART NUMBER	AIRLINE STOCK NUMBER	NOMENCLATURE 1234567	EFF CODE	UNITS PER ASSY
-040H	L0NC0IN2-193		. . . COVERING ASSY-FLOOR, NON TEXTILE used on 010H SEE SIL 25-131 FOR DET		001
-040J	S3510		. . . COVERING-FLOOR, NON TEXTILE used on 010J		001
-040K	497H6770		. . . COVERING-FLOOR, NON TEXTILE used on 010K SEE SIL 25-131 FOR DET		001
-040L	AFR1535DA8-84		. . . COVERING-FLOOR, NON TEXTILE used on 010L SEE SIL 25-131 FOR DET		001
-040M	473841700		. . . COVERING-FLOOR, NON TEXTILE used on 010M SEE SIL 25-131 FOR DET		001
-040N	S125400206-086		. . . COVERING-FLOOR, NON TEXTILE POST VSB A2-254-25-130 used on 010N		001
-042A	FLOORSIL2AI8-8		. . . SEALANT POST VSB A2-254-25-130 used on 010N FLOORSIL2-AI8-8		AR
-045A	ABS5768A500		. . . TAPE-ADHESIVE POST VSB A2-254-25-130 used on 010N SCOTCH 950 NBC/ABS 5768A-500		AR

- ITEM NOT ILLUSTRATED

FIG. ITEM	PART NUMBER	AIRLINE STOCK NUMBER	NOMENCLATURE 1234567	EFF CODE	UNITS PER ASSY
050A	A225401207-500		. . PANEL ASSY-FLOOR used on 001A, 001B, 001C, 001D, 001E, 001F, 001G, 001H, 001J, 001K, 001L, 001M, 001N		001
060A	A225400206-200		. . . STRIP-END,FLOOR PANEL used on 050A		001
070A	DAN298-4030		. . . SCREW used on 050A		004
-080A	NAS1833C3-370		. . . INSERT used on 050A		002
-090A	NAS1835C08		. . . INSERT used on 050A		020
-100A	NAS1833C4-500		. . . INSERT used on 050A		004
110A	A225400217-200		. . . ANGLE used on 050A		001
120A	A225400217-204		. . . ANGLE used on 050A		001
130A	MS24693C48		. . . SCREW used on 050A		010
140A	A225400217-206		. . . ANGLE used on 050A		001
150A	NAS1096-2-6		. . . SCREW BUY PN NAS1801-08-6 used on 050A		002
160A	ASNA0113-40ADL		. . . WASHER used on 050A		010
170A	A225400217-212		. . . ANGLE used on 050A		002

- ITEM NOT ILLUSTRATED

FIG. ITEM	PART NUMBER	AIRLINE STOCK NUMBER	NOMENCLATURE 1234567	EFF CODE	UNITS PER ASSY
180A	NAS1096-2-7		. . . SCREW BUY PN NAS1801-08-7 used on 050A		004
190A	MS21042-08		. . . NUT used on 050A		004
200A	A225400234-214		. . . SCREW used on 050A		003
210A	NAS1102-08-10		. . SCREW used on 001A, 001B, 001C, 001D, 001E, 001F, 001G, 001H, 001J, 001K, 001L, 001M, 001N		006
220A	0-123-000700000		. . WASHER used on 001A, 001B, 001C, 001D, 001E, 001F, 001G, 001H, 001J, 001K, 001L, 001M, 001N		006
230A	NAS1096-2-9		. . SCREW BUY PN NAS1801-08-9 used on 001A, 001B, 001C, 001D, 001E, 001F, 001G, 001H, 001J, 001K, 001L, 001M, 001N		010
240A	ASNA0113-40ADL		. . WASHER used on 001A, 001B, 001C, 001D, 001E, 001F, 001G, 001H, 001J, 001K, 001L, 001M, 001N		006
250A	NAS1149CN832R		. . WASHER used on 001A, 001B, 001C, 001D, 001E, 001F, 001G, 001H, 001J, 001K, 001L, 001M, 001N		004

- ITEM NOT ILLUSTRATED

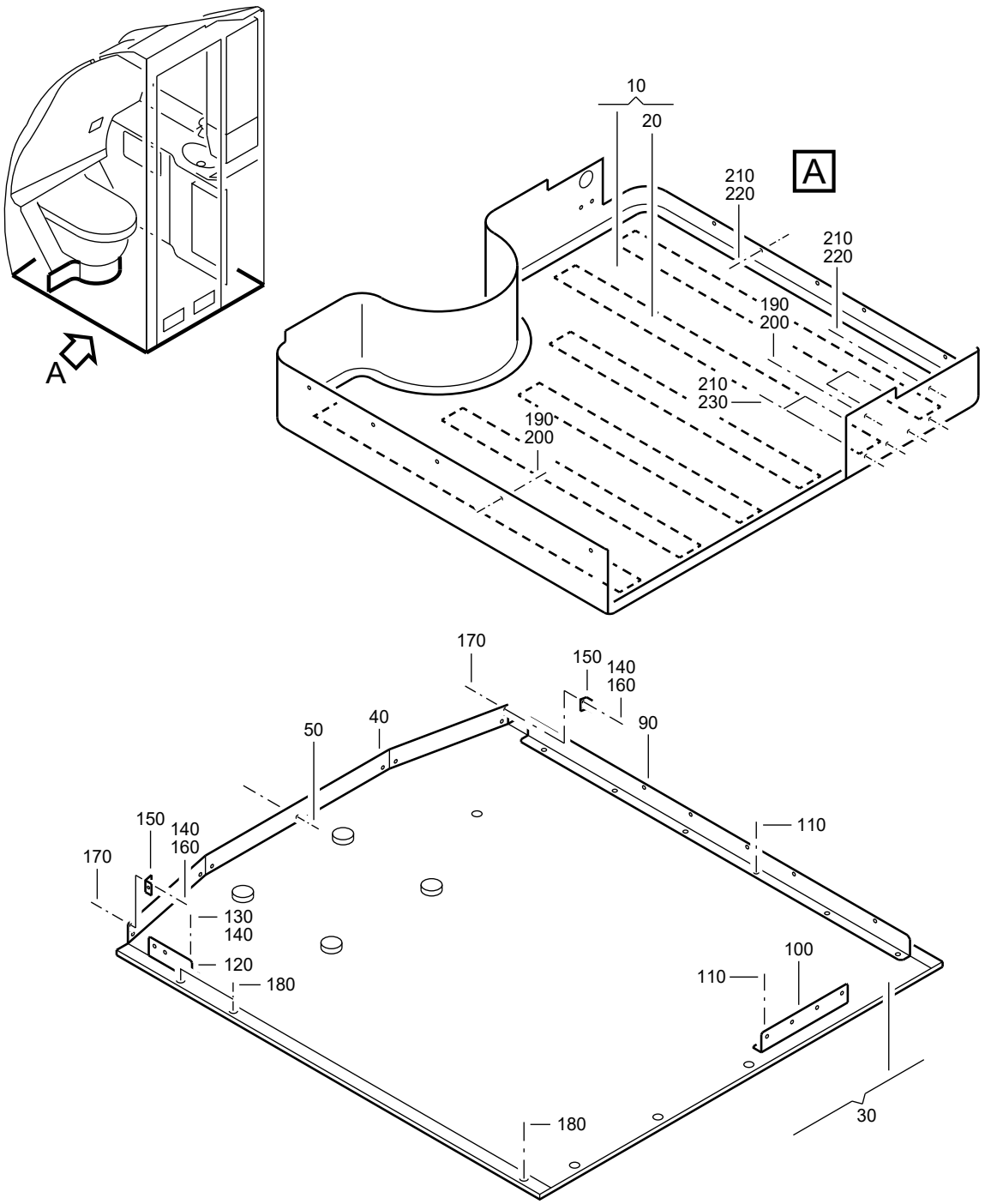

F_PL_254151_13_R_01_00

PAN-FLOOR
Figure 13R/EN254151SHEET13R01

FIG. ITEM	PART NUMBER	AIRLINE STOCK NUMBER	NOMENCLATURE 1234567	EFF CODE	UNITS PER ASSY
13R					
-001A	D2549030411672		. PAN-FLOOR NP used on 090A (25415101Q), 090J (25415101S), 090C(25415101V), 090B (25415101W), 090F (25415101Z), 090C(25415141B), 090E (25415141D), 090B (25415141G), 090K (25415141M), 090A (25415141N), 090C (25415141W), 090G (25415142L), 090G (25415142N), 090C (25415142T) SEE 25-41-51-01Q FOR NHA SEE 25-41-51-01S FOR NHA SEE 25-41-51-01V FOR NHA SEE 25-41-51-01W FOR NHA SEE 25-41-51-01Z FOR NHA SEE 25-41-51-41B FOR NHA SEE 25-41-51-41D FOR NHA SEE 25-41-51-41G FOR NHA SEE 25-41-51-41M FOR NHA SEE 25-41-51-41N FOR NHA SEE 25-41-51-41W FOR NHA SEE 25-41-51-42L FOR NHA SEE 25-41-51-42N FOR NHA SEE 25-41-51-42T FOR NHA		RF
010A	A225401209-000		. . PAN-FLOOR POST SB 25-1314 used on 001A		001
020A	SC0TCH4930-50		. . . TAPE-ADHESIVE USE AS REQUIRED REQUIRED LENGTH 3500 MM SC0TCH493050MMX33M used on 010A		AR

- ITEM NOT ILLUSTRATED

FIG. ITEM	PART NUMBER	AIRLINE STOCK NUMBER	NOMENCLATURE 1234567	EFF CODE	UNITS PER ASSY
030A	A225401207-500		. . PANEL ASSY-FLOOR POST SB 25-1314 used on 001A		001
040A	A225400206-200		. . . STRIP-END,FLOOR PANEL used on 030A		001
050A	DAN298-4030		. . . SCREW used on 030A		004
-060A	NAS1833C3-350		. . . INSERT used on 030A		003
-070A	NAS1835C08		. . . INSERT used on 030A		016
-080A	NAS1833C4-500		. . . INSERT used on 030A		004
090A	A225400217-200		. . . ANGLE used on 030A		001
100A	A225400217-204		. . . ANGLE used on 030A		001
110A	MS24693C48		. . . SCREW used on 030A		010
120A	A225400217-206		. . . ANGLE used on 030A		001
130A	NAS1096-2-6		. . . SCREW BUY PN NAS1801-08-6 used on 030A		002
140A	ASNA0113-40ADL		. . . WASHER used on 030A		010
150A	A225400217-212		. . . ANGLE used on 030A		002

- ITEM NOT ILLUSTRATED

FIG. ITEM	PART NUMBER	AIRLINE STOCK NUMBER	NOMENCLATURE 1234567	EFF CODE	UNITS PER ASSY
160A	NAS1096-2-7		. . . SCREW BUY PN NAS1801-08-7 used on 030A		004
170A	MS21042-08		. . . NUT used on 030A		004
180A	A225400234-214		. . . SCREW used on 030A		003
190A	NAS1102-08-10		. . SCREW used on 001A		006
200A	0-123-000700000		. . WASHER used on 001A		006
210A	NAS1096-2-9		. . SCREW BUY PN NAS1801-08-9 used on 001A		010
220A	ASNA0113-40ADL		. . WASHER used on 001A		006
230A	NAS1149CN832R		. . WASHER used on 001A		004

- ITEM NOT ILLUSTRATED

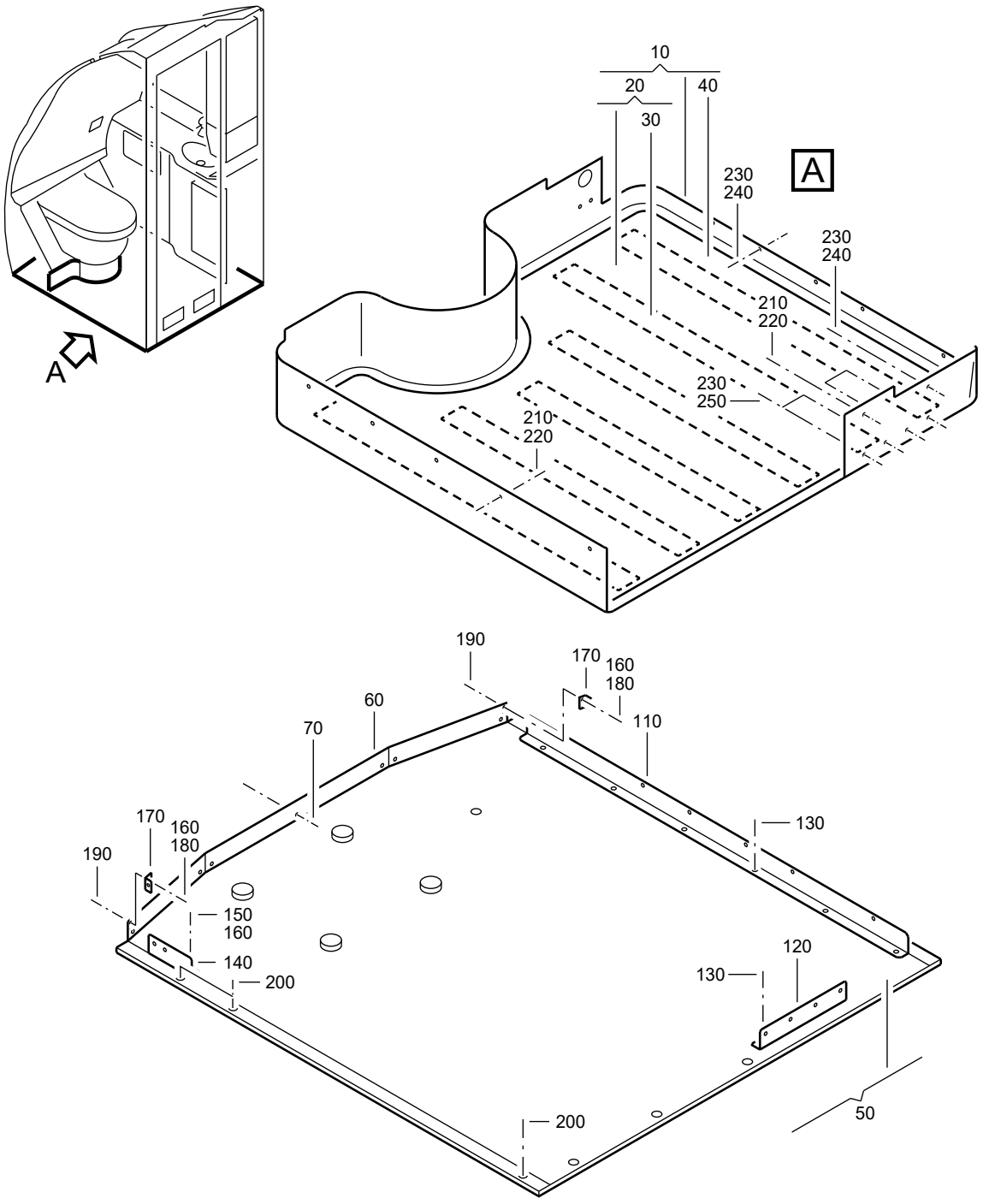

F_PL_254151_13_S_01_00

PAN-FLOOR
Figure 13S/EN254151SHEET13S01

FIG. ITEM	PART NUMBER	AIRLINE STOCK NUMBER	NOMENCLATURE 1234567		EFF CODE	UNITS PER ASSY
13S						
-001A	D2549040501272		. PAN-FLOOR used on 090F (25415142M) SEE 25-41-51-42M FOR NHA	NP		RF
-001B	D2549010404672		. PAN-FLOOR used on 090H (25415142J), 090B (25415142N), 090G(25415142R) SEE 25-41-51-42J FOR NHA SEE 25-41-51-42N FOR NHA SEE 25-41-51-42R FOR NHA	NP		RF
-001C	D2549030700472		. PAN-FLOOR used on 090G (25415142J), 090J (25415142M), 090D(25415142R) SEE 25-41-51-42J FOR NHA SEE 25-41-51-42M FOR NHA SEE 25-41-51-42R FOR NHA	NP		RF
-001D	D2549020410272		. PAN-FLOOR used on 090K (25415142M), 090E (25415142T) SEE 25-41-51-42M FOR NHA SEE 25-41-51-42T FOR NHA	NP		RF
-001E	D2549010402472		. PAN-FLOOR used on 090D (25415142N), 090H (25415142T) SEE 25-41-51-42N FOR NHA SEE 25-41-51-42T FOR NHA	NP		RF
-001F	D2549030700872		. PAN-FLOOR used on 090D (25415142Q), 090E (25415142U) SEE 25-41-51-42Q FOR NHA SEE 25-41-51-42U FOR NHA	NP		RF
-001G	D2549010405472		. PAN-FLOOR used on 090H (25415142Q) SEE 25-41-51-42Q FOR NHA	NP		RF

- ITEM NOT ILLUSTRATED

FIG. ITEM	PART NUMBER	AIRLINE STOCK NUMBER	NOMENCLATURE 1234567	EFF CODE	UNITS PER ASSY
-001H	D2549020410872		. PAN-FLOOR NP used on 090E (25415142P), 090K (25415142Q), 090A(25415142R), 090B (25415142S), 090D (25415142U) SEE 25-41-51-42P FOR NHA SEE 25-41-51-42Q FOR NHA SEE 25-41-51-42R FOR NHA SEE 25-41-51-42S FOR NHA SEE 25-41-51-42U FOR NHA		RF
-001J	D2549020402072		. PAN-FLOOR NP used on 090A (25415142J), 090D (25415142P), 090E(25415142R), 090H (25415142S) SEE 25-41-51-42J FOR NHA SEE 25-41-51-42P FOR NHA SEE 25-41-51-42R FOR NHA SEE 25-41-51-42S FOR NHA		RF
-001K	D2549030702072		. PAN-FLOOR NP used on 090H (25415142R) SEE 25-41-51-42R FOR NHA		RF
-001L	D2549020414672		. PAN-FLOOR NP used on 090A (25415142T) SEE 25-41-51-42T FOR NHA		RF
-001M	D2549020413872		. PAN-FLOOR NP used on 090A (25415142U) SEE 25-41-51-42U FOR NHA		RF
010A	A225401209-520		. . PAN ASSY-FLOOR used on 001A		001
-010B	A225401209-566		. . PAN ASSY-FLOOR used on 001B		001
-010C	A225401209-576		. . PAN ASSY-FLOOR used on 001C		001

- ITEM NOT ILLUSTRATED

FIG. ITEM	PART NUMBER	AIRLINE STOCK NUMBER	NOMENCLATURE 1234567	EFF CODE	UNITS PER ASSY
-010D	A225401209-574		. . PAN ASSY-FLOOR used on 001D		001
-010E	A225401209-572		. . PAN ASSY-FLOOR used on 001E		001
-010F	A225401209-580		. . PAN ASSY-FLOOR used on 001F		001
-010G	A225401209-582		. . PAN ASSY-FLOOR used on 001G		001
-010H	A225401209-584		. . PAN ASSY-FLOOR used on 001H		001
-010J	A225401209-586		. . PAN ASSY-FLOOR used on 001J		001
-010K	A225401209-588		. . PAN ASSY-FLOOR used on 001K		001
-010L	A225401209-592		. . PAN ASSY-FLOOR used on 001L		001
-010M	A225401209-590		. . PAN ASSY-FLOOR used on 001M		001
020A	A225401209-000		. . . PAN-FLOOR used on 010A, 010B, 010D, 010E, 010F, 010G, 010H, 010J, 010L, 010M		001
-020B	A225401209-016		. . . PAN-FLOOR used on 010C		001
-020C	A225401209-018		. . . PAN-FLOOR used on 010K		001

- ITEM NOT ILLUSTRATED

FIG. ITEM	PART NUMBER	AIRLINE STOCK NUMBER	NOMENCLATURE 1234567	EFF CODE	UNITS PER ASSY
030A	SC0TCH4930-50		. . . . TAPE-ADHESIVE USE AS REQUIRED SC0TCH493050MMX33M used on 020A, 020B, 020C		AR
040A	L0NC0IN2-193		. . . COVERING ASSY-FLOOR, NON TEXTILE used on 010A, 010C SEE SIL 25-131 FOR DET		001
-040B	497679800		. . . COVERING-FLOOR, NON TEXTILE used on 010B SEE SIL 25-131 FOR DET		001
-040C	477675600		. . . COVERING-FLOOR, NON-TEXTILE used on 010D SEE SIL 25-131 FOR DET		001
-040D	497648400		. . . COVERING-FLOOR, NON TEXTILE used on 010E		001
-040E	AFR1550DA8-87		. . . COVERING-FLOOR, NON TEXTILE used on 010F SEE SIL 25-131 FOR DET		001
-040F	473649721		. . . COVERING-FLOOR, NON TEXTILE used on 010G SEE SIL 25-131 FOR DET		001
-040G	473675620		. . . COVERING-FLOOR, NON-TEXTILE used on 010H SEE SIL 25-131 FOR DET		001

- ITEM NOT ILLUSTRATED

FIG. ITEM	PART NUMBER	AIRLINE STOCK NUMBER	NOMENCLATURE 1234567	EFF CODE	UNITS PER ASSY
-040H	L0NC0IN2-187		. . . COVERING-FLOOR, NON-TEXTILE used on 010J SEE SIL 25-131 FOR DET		001
-040J	S3510		. . . COVERING-FLOOR, NON TEXTILE used on 010L		001
-040K	S7921		. . . COVERING-FLOOR, NON TEXTILE used on 010K		001
-040L	S7862		. . . COVERING-FLOOR, NON TEXTILE used on 010M		001
050A	A225401207-500		. . PANEL ASSY-FLOOR used on 001A, 001B, 001C, 001D, 001E, 001F, 001G, 001H, 001J, 001K, 001L, 001M		001
060A	A225400206-200		. . . STRIP-END,FLOOR PANEL used on 050A		001
070A	DAN298-4030		. . . SCREW used on 050A		004
-080A	NAS1833C3-370		. . . INSERT used on 050A		002
-090A	NAS1835C08		. . . INSERT used on 050A		020
-100A	NAS1833C4-500		. . . INSERT used on 050A		004
110A	A225400217-200		. . . ANGLE used on 050A		001

- ITEM NOT ILLUSTRATED

FIG. ITEM	PART NUMBER	AIRLINE STOCK NUMBER	NOMENCLATURE 1234567	EFF CODE	UNITS PER ASSY
120A	A225400217-204		. . . ANGLE used on 050A		001
130A	MS24693C48		. . . SCREW used on 050A		010
140A	A225400217-206		. . . ANGLE used on 050A		001
150A	NAS1096-2-6		. . . SCREW BUY PN NAS1801-08-6 used on 050A		002
160A	ASNA0113-40ADL		. . . WASHER used on 050A		010
170A	A225400217-212		. . . ANGLE used on 050A		002
180A	NAS1096-2-7		. . . SCREW BUY PN NAS1801-08-7 used on 050A		004
190A	MS21042-08		. . . NUT used on 050A		004
200A	A225400234-214		. . . SCREW used on 050A		003
210A	NAS1102-08-10		. . SCREW used on 001A, 001B, 001C, 001D, 001E, 001F, 001G, 001H, 001J, 001K, 001L, 001M		006
220A	0-123-000700000		. . WASHER used on 001A, 001B, 001C, 001D, 001E, 001F, 001G, 001H, 001J, 001K, 001L, 001M		006

- ITEM NOT ILLUSTRATED

FIG. ITEM	PART NUMBER	AIRLINE STOCK NUMBER	NOMENCLATURE 1234567	EFF CODE	UNITS PER ASSY
230A	NAS1096-2-9		. . SCREW BUY PN NAS1801-08-9 used on 001A, 001B, 001C, 001D, 001E, 001F, 001G, 001H, 001J, 001K, 001L, 001M		010
240A	ASNA0113-40ADL		. . WASHER used on 001A, 001B, 001C, 001D, 001E, 001F, 001G, 001H, 001J, 001K, 001L, 001M		006
250A	NAS1149CN832R		. . WASHER used on 001A, 001B, 001C, 001D, 001E, 001F, 001G, 001H, 001J, 001K, 001L, 001M		004

- ITEM NOT ILLUSTRATED

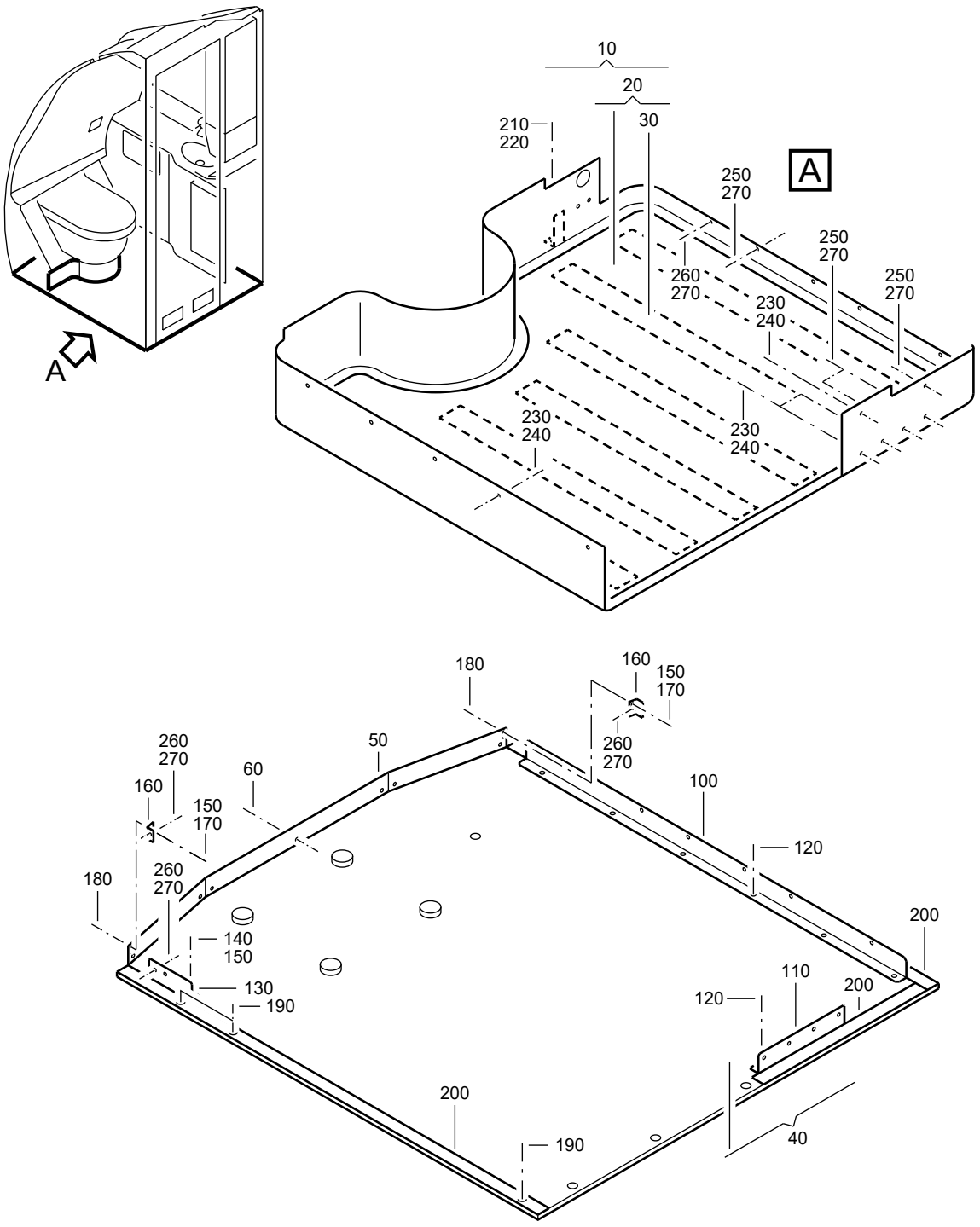

PAN-FLOOR
Figure 13T/EN254151SHEET13T01

FIG. ITEM	PART NUMBER	AIRLINE STOCK NUMBER	NOMENCLATURE 1234567	EFF CODE	UNITS PER ASSY
13T					
-001A	D2549030511672		. PAN-FLOOR NP used on 090H (25415101U), 090G (25415101Y), 090F (25415141B) SEE 25-41-51-01U FOR NHA SEE 25-41-51-01Y FOR NHA SEE 25-41-51-41B FOR NHA		RF
-001B	D2549030602472		. PAN-FLOOR NP used on 090G (25415141D), 090G (25415141G), 090L (25415141P), 090D (25415141V), 090B (25415141Y), 090L (25415142A), 090L (25415142F) SEE 25-41-51-41D FOR NHA SEE 25-41-51-41G FOR NHA SEE 25-41-51-41P FOR NHA SEE 25-41-51-41V FOR NHA SEE 25-41-51-41Y FOR NHA SEE 25-41-51-42A FOR NHA SEE 25-41-51-42F FOR NHA		RF

- ITEM NOT ILLUSTRATED

FIG. ITEM	PART NUMBER	AIRLINE STOCK NUMBER	NOMENCLATURE 1234567	EFF CODE	UNITS PER ASSY
-001C	D2549010514272		. PAN-FLOOR NP used on 090F (25415101L), 090G (25415101T), 090D(254151410), 090L (25415141F), 090L (25415141J), 090H(25415141L), 090E (25415141P), 090H (25415141R), 090L(25415141S), 090E (25415141U), 090K (25415141V), 090H(25415141W), 090H (25415141X), 090K (25415141Y), 090H(25415141Z), 090M (25415142A), 090H (25415142C), 090K(25415142D), 090F (25415142F), 090E (25415142K) SEE 25-41-51-01L FOR NHA SEE 25-41-51-01T FOR NHA SEE 25-41-51-410 FOR NHA SEE 25-41-51-41F FOR NHA SEE 25-41-51-41J FOR NHA SEE 25-41-51-41L FOR NHA SEE 25-41-51-41P FOR NHA SEE 25-41-51-41R FOR NHA SEE 25-41-51-41S FOR NHA SEE 25-41-51-41U FOR NHA SEE 25-41-51-41V FOR NHA SEE 25-41-51-41W FOR NHA SEE 25-41-51-41X FOR NHA SEE 25-41-51-41Y FOR NHA SEE 25-41-51-41Z FOR NHA SEE 25-41-51-42A FOR NHA SEE 25-41-51-42C FOR NHA SEE 25-41-51-42D FOR NHA SEE 25-41-51-42F FOR NHA SEE 25-41-51-42K FOR NHA		RF
010A	A225491030-002		. . FLOOR ASSY-LAVATORY POST SB 25-1314 used on 001A		001

- ITEM NOT ILLUSTRATED

FIG. ITEM	PART NUMBER	AIRLINE STOCK NUMBER	NOMENCLATURE 1234567	EFF CODE	UNITS PER ASSY
-010B	A225491030-004		. . FLOOR ASSY-LAVATORY POST SB 25-1314 used on 001B		001
-010C	A225491030-000		. . FLOOR ASSY-LAVATORY POST SB 25-1314 used on 001C		001
020A	A225401209-002		. . . PAN-FLOOR used on 010A		001
-020B	A225401209-004		. . . PAN-FLOOR used on 010B		001
-020C	A225401209-000		. . . PAN-FLOOR used on 010C		001
030A	SC0TCH4930-50		. . . . TAPE-ADHESIVE USE AS REQUIRED SC0TCH493050MMX33M used on 020A, 020B, 020C		AR
040A	A225401207-500		. . . PANEL ASSY-FLOOR used on 010A, 010B, 010C		001
050A	A225400206-200		. . . . STRIP-END,FLOOR PANEL used on 040A		001
060A	DAN298-4030		. . . . SCREW used on 040A		007
-070A	NAS1833C3-350		. . . . INSERT used on 040A		003
-080A	NAS1835C08		. . . . INSERT used on 040A		016
-090A	NAS1833C4-500		. . . . INSERT used on 040A		004

- ITEM NOT ILLUSTRATED

FIG. ITEM	PART NUMBER	AIRLINE STOCK NUMBER	NOMENCLATURE 1234567	EFF CODE	UNITS PER ASSY
100A	A225400217-200		. . . . ANGLE used on 040A		001
110A	A225400217-204		. . . . ANGLE used on 040A		001
120A	MS24693C48		. . . . SCREW used on 040A		010
130A	A225400217-206		. . . . ANGLE used on 040A		001
140A	NAS1096-2-6		. . . . SCREW BUY PN NAS1801-08-6 used on 040A		002
150A	ASNA0113-40ADL		. . . . WASHER used on 040A		010
160A	A225400217-212		. . . . ANGLE used on 040A		002
170A	NAS1096-2-7		. . . . SCREW BUY PN NAS1801-08-7 used on 040A		004
180A	MS21042-08		. . . . NUT used on 040A		004
190A	A225400234-214		. . . . SCREW used on 040A		003
200A	DCIN205		. . . . SECTION-SEALING USE AS REQUIRED used on 040A		AR
210A	NAS1096-2-5		. . . SCREW BUY PN NAS1801-08-5 used on 010A, 010B, 010C		001

- ITEM NOT ILLUSTRATED

FIG. ITEM	PART NUMBER	AIRLINE STOCK NUMBER	NOMENCLATURE 1234567	EFF CODE	UNITS PER ASSY
220A	NAS1149CN832R		. . . WASHER used on 010A, 010B, 010C		001
230A	NAS1102-08-10		. . SCREW POST SB 25-1314 used on 001A, 001B, 001C		008
240A	0-123-000700000		. . WASHER POST SB 25-1314 used on 001A, 001B, 001C		008
250A	NAS1096-2-9		. . SCREW POST SB 25-1314 BUY PN NAS1801-08-9 used on 001A, 001B, 001C		008
260A	NAS1096-2-6		. . SCREW POST SB 25-1314 BUY PN NAS1801-08-6 used on 001A, 001B, 001C		005
270A	NAS1149CN832R		. . WASHER POST SB 25-1314 used on 001A, 001B, 001C		013
-280A	NAS1833C08-370		. . INSERT POST SB 25-1314 used on 001A, 001B, 001C		004
-290A	NSA935405-01		. . MOUNT POST SB 25-1314 used on 001A, 001B, 001C		005
-300A	NSA935401-03		. . TIE-CABLE POST SB 25-1314 used on 001A, 001B, 001C		005

- ITEM NOT ILLUSTRATED

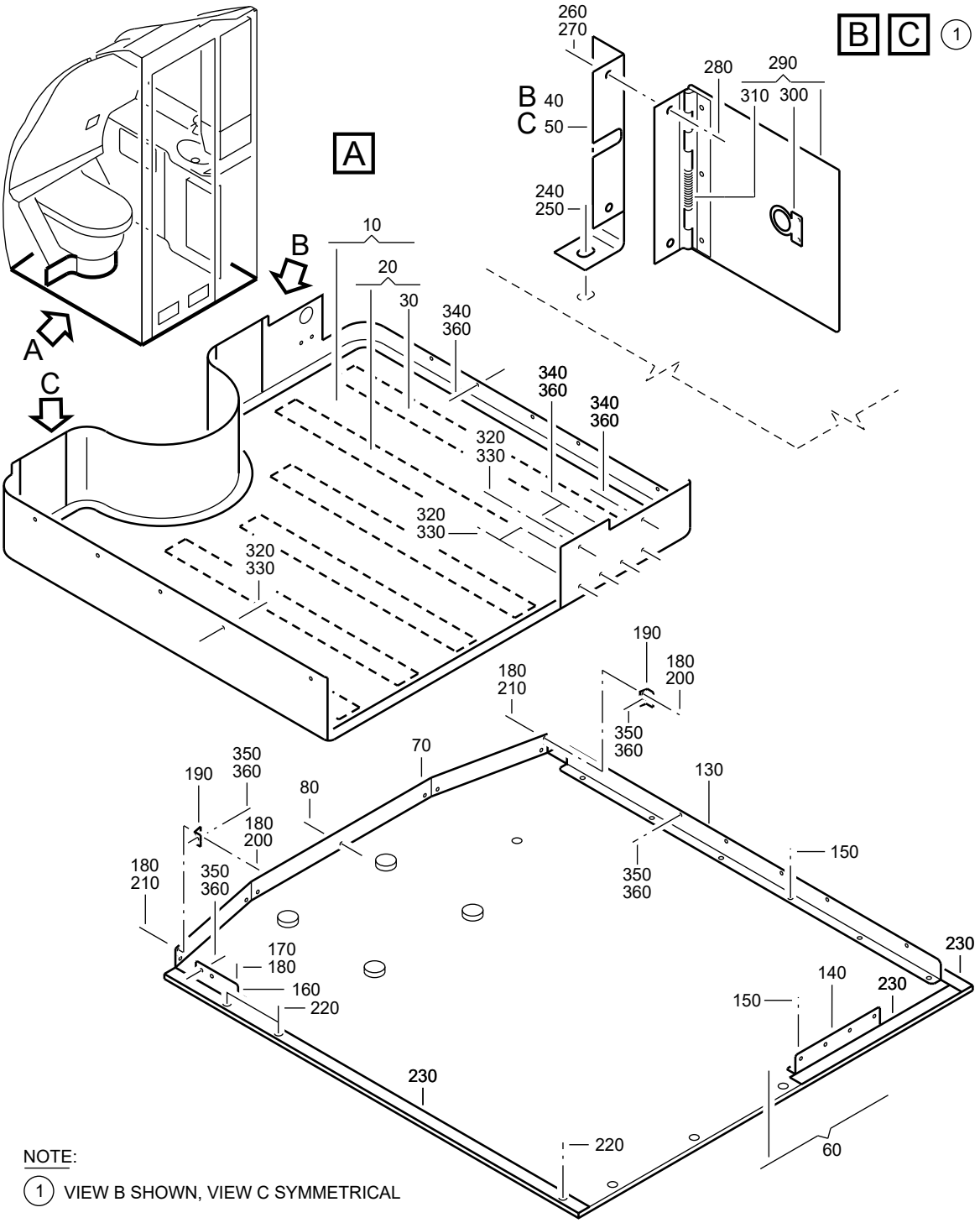

NOTE:

(1) VIEW B SHOWN, VIEW C SYMMETRICAL

F_PL_254151_13_U_01_01

PAN-FLOOR
Figure 13U/EN254151SHEET13U01

FIG. ITEM	PART NUMBER	AIRLINE STOCK NUMBER	NOMENCLATURE 1234567	EFF CODE	UNITS PER ASSY
13U -001A	D2549020603272		. PAN-FLOOR NP used on 090E (25415101C), 090G (25415101D), 090J (25415101G), 090A (25415101H), 090K (25415101K), 090H(25415101L), 090A (25415101N), 090L (25415101Q), 090L(25415141D), 090E (25415141T) SEE 25-41-51-01C FOR NHA SEE 25-41-51-01D FOR NHA SEE 25-41-51-01G FOR NHA SEE 25-41-51-01H FOR NHA SEE 25-41-51-01K FOR NHA SEE 25-41-51-01L FOR NHA SEE 25-41-51-01N FOR NHA SEE 25-41-51-01Q FOR NHA SEE 25-41-51-41D FOR NHA SEE 25-41-51-41T FOR NHA		RF
010A	A225491030-014		. . FLOOR ASSY-LAVATORY POST SB 25-1314 used on 001A		001
020A	A225401209-906		. . . PAN ASSY-FLOOR used on 010A		001
030A	SC0TCH4930-50		. . . . TAPE-ADHESIVE USE AS REQUIRED SC0TCH493050MMX33M used on 020A		AR
040A	A225400202-214		. . . . ANGLE used on 020A		001
050A	A225400202-215		. . . . ANGLE used on 020A		001
060A	A225401207-134		. . . PANEL ASSY-FLOOR used on 010A		001

- ITEM NOT ILLUSTRATED

FIG. ITEM	PART NUMBER	AIRLINE STOCK NUMBER	NOMENCLATURE 1234567	EFF CODE	UNITS PER ASSY
070A	A225400206-200		. . . . STRIP-END,FLOOR PANEL used on 060A		001
080A	DAN298-4030		. . . . SCREW used on 060A		007
-090A	NAS1833C3-350		. . . . INSERT used on 060A		003
-100A	NAS1835C08		. . . . INSERT used on 060A		016
-110A	NAS1833C4-500		. . . . INSERT used on 060A		004
-120A	NAS1833C08-250		. . . . INSERT used on 060A		010
130A	A225400217-200		. . . . ANGLE used on 060A		001
140A	A225400217-204		. . . . ANGLE used on 060A		001
150A	MS24693C48		. . . . SCREW used on 060A		010
160A	A225400217-206		. . . . ANGLE used on 060A		001
170A	NAS1096-2-6		. . . . SCREW BUY PN NAS1801-08-6 used on 060A		002
180A	ASNA0113-40ADL		. . . . WASHER used on 060A		010
190A	A225400217-212		. . . . ANGLE used on 060A		002

- ITEM NOT ILLUSTRATED

FIG. ITEM	PART NUMBER	AIRLINE STOCK NUMBER	NOMENCLATURE 1234567	EFF CODE	UNITS PER ASSY
200A	NAS1096-2-7		. . . . SCREW BUY PN NAS1801-08-7 used on 060A		004
210A	MS21042-08		. . . . NUT used on 060A		004
220A	A225400234-214		. . . . SCREW used on 060A		003
230A	DCIN205		. . . . SECTION-SEALING USE AS REQUIRED used on 060A		AR
240A	NAS1096-2-5		. . . SCREW BUY PN NAS1801-08-5 used on 010A		002
250A	NAS1149CN832R		. . . WASHER used on 010A		002
260A	MS21042-08		. . . NUT used on 010A		004
270A	NAS1149C0332R		. . . WASHER used on 010A		004
280A	NAS1096-2-8		. . . SCREW BUY PN NAS1801-08-8 used on 010A		004
290A	A325432202-700		. . . FLAP ASSY used on 010A		002
300A	KM713-12-032		. . . . CAP-BLANKING used on 290A		001
310A	5011-02-0001		. . . . SPRING used on 290A		001

- ITEM NOT ILLUSTRATED

FIG. ITEM	PART NUMBER	AIRLINE STOCK NUMBER	NOMENCLATURE 1234567	EFF CODE	UNITS PER ASSY
320A	NAS1102-08-10		. . SCREW POST SB 25-1314 used on 001A		008
330A	0-123-000700000		. . WASHER POST SB 25-1314 used on 001A		008
340A	NAS1096-2-9		. . SCREW POST SB 25-1314 BUY PN NAS1801-08-9 used on 001A		008
350A	NAS1096-2-6		. . SCREW POST SB 25-1314 BUY PN NAS1801-08-6 used on 001A		005
360A	NAS1149CN832R		. . WASHER POST SB 25-1314 used on 001A		013
-370A	NAS1833C08-370		. . INSERT POST SB 25-1314 used on 001A		008
-380A	NSA935405-01		. . MOUNT POST SB 25-1314 used on 001A		005
-390A	NSA935401-03		. . TIE-CABLE POST SB 25-1314 used on 001A		005

- ITEM NOT ILLUSTRATED

THIS PAGE IS INTENTIONALLY LEFT BLANK

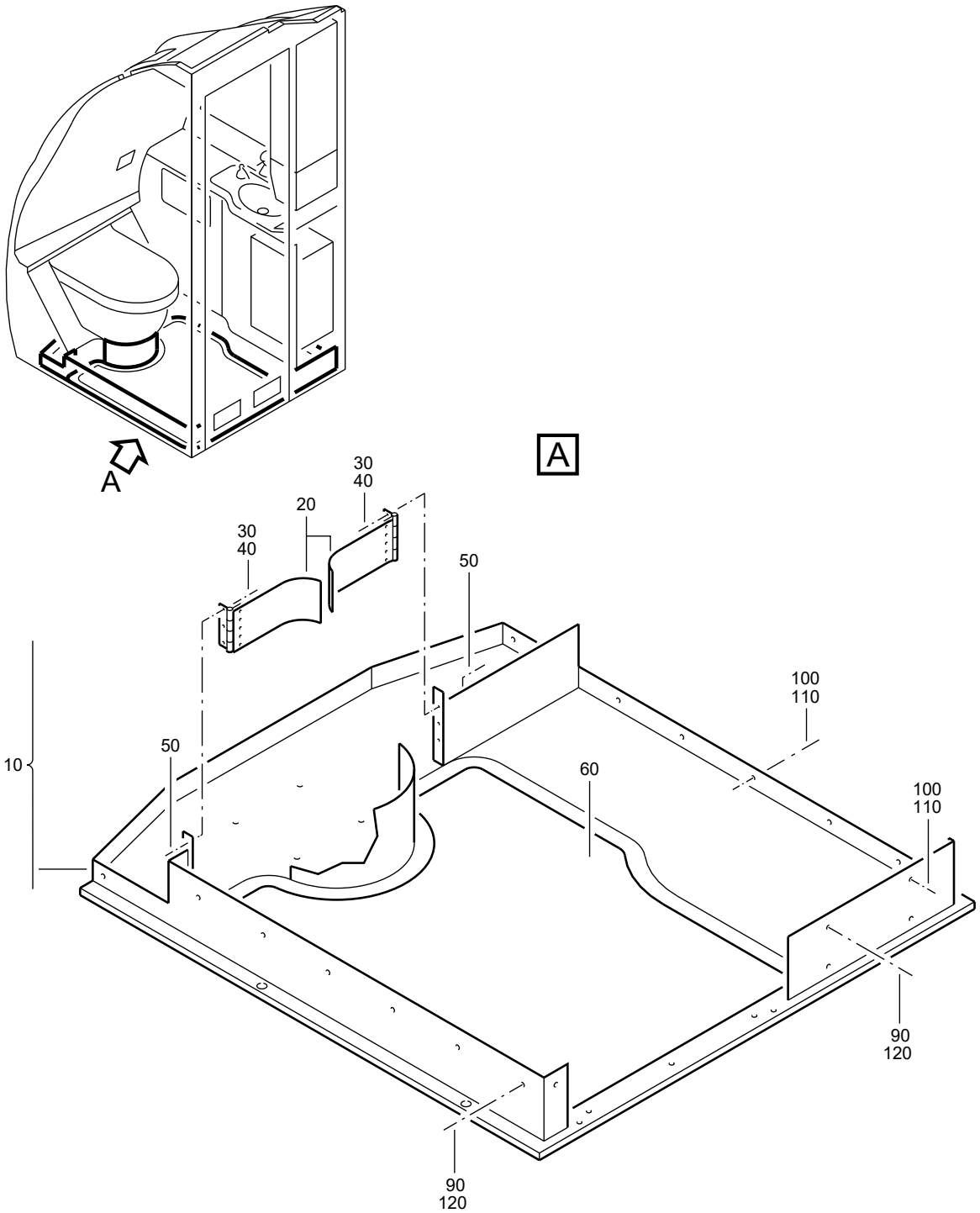

F_PL_254151_13_V_01_00

PAN-FLOOR
Figure 13V/EN254151SHEET13V01

FIG. ITEM	PART NUMBER	AIRLINE STOCK NUMBER	NOMENCLATURE 1234567		EFF CODE	UNITS PER ASSY
13V						
-001A	D2549020700472		. PAN-FLOOR used on 090H (25415101M), 090M (25415101W), 090K (25415101Z), 090L (25415141K) SEE 25-41-51-01M FOR NHA SEE 25-41-51-01W FOR NHA SEE 25-41-51-01Z FOR NHA SEE 25-41-51-41K FOR NHA	NP		RF
-001B	D2549010606272		. PAN-FLOOR POST SB 25-1289 used on 090G (25415101A) SEE 25-41-51-01A FOR NHA	NP		RF
-001C	D2549010601672		. PAN-FLOOR POST SB 25-1289 used on 090M (25415101J), 090M (25415101X), 090M (25415141G) SEE 25-41-51-01J FOR NHA SEE 25-41-51-01X FOR NHA SEE 25-41-51-41G FOR NHA	NP		RF
-001D	D2549020700672		. PAN-FLOOR POST SB 25-1289 used on 090J (25415101M), 090N (25415101X) SEE 25-41-51-01M FOR NHA SEE 25-41-51-01X FOR NHA	NP		RF
-001E	D2549020508472		. PAN-FLOOR POST SB 25-1289 used on 090N (25415101W), 090K (25415101Y), 090N (25415141F) SEE 25-41-51-01W FOR NHA SEE 25-41-51-01Y FOR NHA SEE 25-41-51-41F FOR NHA	NP		RF

- ITEM NOT ILLUSTRATED

FIG. ITEM	PART NUMBER	AIRLINE STOCK NUMBER	NOMENCLATURE 1234567	EFF CODE	UNITS PER ASSY
-001F	D2549010606072		. PAN-FLOOR NP POST SB 25-1289 used on 090M (25415141F) SEE 25-41-51-41F FOR NHA		RF
-001G	D2549020700272		. PAN-FLOOR NP POST SB 25-1289 used on 090H (25415101A), 090H (25415101B), 090G (25415101C), 090H (25415101H) SEE 25-41-51-01A FOR NHA SEE 25-41-51-01B FOR NHA SEE 25-41-51-01C FOR NHA SEE 25-41-51-01H FOR NHA		RF
-001H	D2549020700872		. PAN-FLOOR NP POST SB 25-1289 used on 090J (25415101A) SEE 25-41-51-01A FOR NHA		RF
-001J	D2549020701072		. PAN-FLOOR NP POST SB 25-1289 used on 090K (25415141J) SEE 25-41-51-41J FOR NHA		RF
-001K	D2549020701272		. PAN-FLOOR NP POST SB 25-1289 used on 090L (25415101J) SEE 25-41-51-01J FOR NHA		RF
-001L	D2549020701472		. PAN-FLOOR NP POST SB 25-1289 used on 090J (25415101P) SEE 25-41-51-01P FOR NHA		RF
-001M	D2549020701672		. PAN-FLOOR NP POST SB 25-1289 used on 090N (25415101J) SEE 25-41-51-01J FOR NHA		RF

- ITEM NOT ILLUSTRATED

FIG. ITEM	PART NUMBER	AIRLINE STOCK NUMBER	NOMENCLATURE 1234567	EFF CODE	UNITS PER ASSY
010A	A225401202-538		. . PAN ASSY-FLOOR used on 001A		001
-010B	A225401202-518		. . PAN ASSY-FLOOR used on 001B		001
-010C	A225401202-602		. . PAN ASSY-FLOOR used on 001C		001
-010D	A225401202-612		. . PAN ASSY-FLOOR used on 001D		001
-010E	A225401202-624		. . PAN ASSY-FLOOR used on 001E		001
-010F	A225401202-636		. . PAN ASSY-FLOOR used on 001F		001
-010G	A225401202-514		. . PAN ASSY-FLOOR used on 001G		001
-010H	A225401202-522		. . PAN ASSY-FLOOR used on 001H		001
-010J	A225401202-694		. . PAN ASSY-FLOOR used on 001J		001
-010K	A225401202-610		. . PAN ASSY-FLOOR used on 001K		001
-010L	A225401202-604		. . PAN ASSY-FLOOR used on 001L		001
-010M	A225401202-608		. . PAN ASSY-FLOOR used on 001M		001
020A	A225400202-800		. . . FLAP ASSY used on 010A, 010B, 010C, 010D, 010E, 010F, 010G, 010H, 010J, 010K, 010L, 010M		002

- ITEM NOT ILLUSTRATED

FIG. ITEM	PART NUMBER	AIRLINE STOCK NUMBER	NOMENCLATURE 1234567	EFF CODE	UNITS PER ASSY
-020B	A225400202-500		. . . FLAP ASSY used on 010C, 010D, 010E, 010F, 010J, 010K, 010L, 010M		002
030A	NAS1096-2-9		. . . SCREW BUY PN NAS1801-08-9 used on 010A, 010B, 010C, 010D, 010E, 010F, 010G, 010H, 010J, 010K, 010L, 010M		004
040A	NAS1149CN832R		. . . WASHER used on 010A, 010B, 010C, 010D, 010E, 010F, 010G, 010H, 010J, 010K, 010L, 010M		004
050A	MS21042-08		. . . NUT used on 010A, 010B, 010C, 010D, 010E, 010F, 010G, 010H, 010J, 010K, 010L, 010M		004
060A	L0NC0IN2-187		. . . COVERING-FLOOR, NON-TEXTILE USE AS REQUIRED used on 010A, 010D SEE SIL 25-131 FOR DET		AR
-060B	473675610		. . . COVERING-FLOOR, NON-TEXTILE USE AS REQUIRED used on 010B, 010E		AR
-060C	473675600		. . . COVERING-FLOOR, NON-TEXTILE USE AS REQUIRED used on 010F, 010L SEE SIL 25-131 FOR DET		AR

- ITEM NOT ILLUSTRATED

FIG. ITEM	PART NUMBER	AIRLINE STOCK NUMBER	NOMENCLATURE 1234567	EFF CODE	UNITS PER ASSY
-060D	AIRFL00R97-8-15		. . . COVERING-FLOOR, NON-TEXTILE USE AS REQUIRED BUY PN AFR1550R88 used on 010G, 010J		AR
-060E	78536608		. . . COVERING-FLOOR, NON-TEXTILE USE AS REQUIRED SHE2522-12N268-065 used on 010H, 010M		AR
-060F	477678300		. . . COVERING-FLOOR, NON-TEXTILE USE AS REQUIRED BUY PN 497B6783 used on 010K SEE SIL 25-131 FOR DET		AR
-070A	NAS1835C08		. . . INSERT used on 010A, 010B, 010C, 010D, 010E, 010F, 010G, 010H, 010J, 010K, 010L, 010M		003
-080A	NSA5345-08C		. . . INSERT used on 010A, 010B, 010C, 010D, 010E, 010F, 010G, 010H, 010J, 010K, 010L, 010M		002
090A	NAS1102-08-10		. . SCREW used on 001A, 001B, 001C, 001D, 001E, 001F, 001G, 001H, 001J, 001K, 001L, 001M		008
100A	NAS1096-2-9		. . SCREW BUY PN NAS1801-08-9 used on 001A, 001B, 001C, 001D, 001E, 001F, 001G, 001H, 001J, 001K, 001L, 001M		007

- ITEM NOT ILLUSTRATED

FIG. ITEM	PART NUMBER	AIRLINE STOCK NUMBER	NOMENCLATURE 1234567	EFF CODE	UNITS PER ASSY
110A	ASNA0113-40ADL		. . WASHER used on 001A, 001B, 001C, 001D, 001E, 001F, 001G, 001H, 001J, 001K, 001L, 001M		007
120A	0-123-000700000		. . WASHER used on 001A, 001B, 001C, 001D, 001E, 001F, 001G, 001H, 001J, 001K, 001L, 001M		008

- ITEM NOT ILLUSTRATED

THIS PAGE IS INTENTIONALLY LEFT BLANK

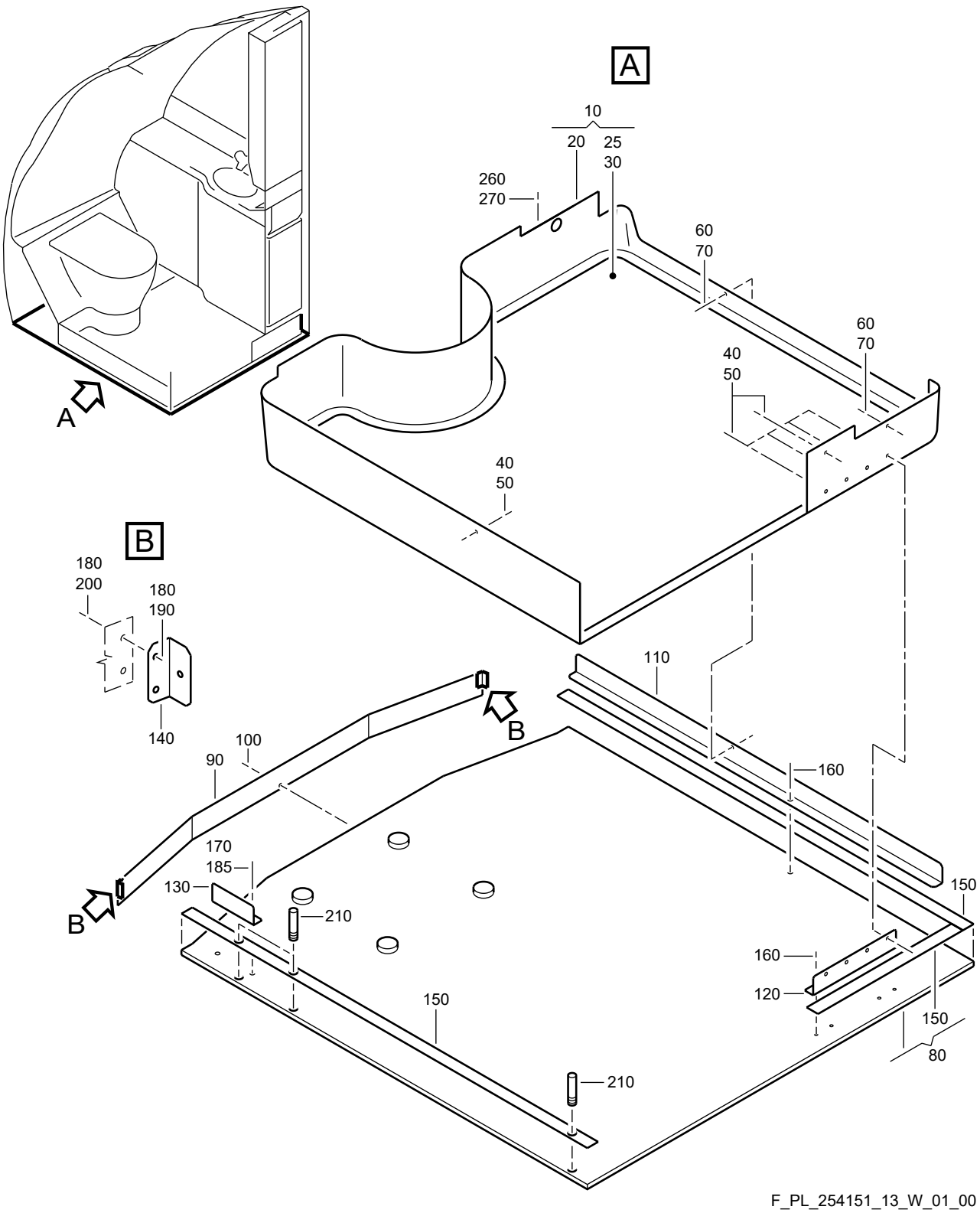

PAN-FLOOR
Figure 13W/EN254151SHEET13W01

FIG. ITEM	PART NUMBER	AIRLINE STOCK NUMBER	NOMENCLATURE 1234567	EFF CODE	UNITS PER ASSY
13W					
-001A	D2547161202872		. PAN-FLOOR NP POST SB 25-1674 used on 090L (25415141M) SEE 25-41-51-41M FOR NHA		RF
-001B	D2547161203472		. PAN-FLOOR NP POST SB 25-1674 used on 090K (25415142N) SEE 25-41-51-42N FOR NHA		RF
010A	A225401205-598		. . PAN ASSY-FLOOR POST SB 25-1674 used on 001A		001
-010B	A225401209-828		. . PAN ASSY-FLOOR POST SB 25-1674 used on 001B		001
020A	A225401208-500		. . . PAN-FLOOR used on 010A		001
-020B	A225401209-058		. . . PAN-FLOOR used on 010B		001
025A	S125400200-286		. . . COVERING-FLOOR, NON TEXTILE used on 010A		001
030A	473C6756		. . . COVERING-FLOOR, NON TEXTILE used on 010B		001
040A	NAS1102-08-10		. . SCREW POST SB 25-1674 used on 001A, 001B		010
050A	0-123-000700000		. . WASHER POST SB 25-1674 used on 001A, 001B		010

- ITEM NOT ILLUSTRATED

FIG. ITEM	PART NUMBER	AIRLINE STOCK NUMBER	NOMENCLATURE 1234567	EFF CODE	UNITS PER ASSY
060A	NAS1801-08-9		. . SCREW used on 001A, 001B		006
070A	ASNA0113-40ADL		. . WASHER used on 001A, 001B		006
080A	A225401207-000		. . PANEL ASSY-FLOOR POST SB 25-1674 used on 001A		001
080B	A225401207-500		. . PANEL ASSY-FLOOR used on 001B		001
090A	A225400206-208		. . . STRIP-END,FLOOR PANEL used on 080A		001
-090B	A225400206-200		. . . STRIP-END,FLOOR PANEL used on 080B		001
100A	DAN298-4030		. . . SCREW used on 080B		007
110A	A225400217-200		. . . ANGLE used on 080A, 080B		001
120A	A225400217-204		. . . ANGLE used on 080A, 080B		001
130A	A225400217-206		. . . ANGLE used on 080A, 080B		001
140A	A225400217-212		. . . ANGLE used on 080B		002
150A	DCIN205		. . . SECTION-SEALING USE AS REQUIRED used on 080A, 080B		AR
160A	MS24693C48		. . . SCREW used on 080A, 080B		010

- ITEM NOT ILLUSTRATED

FIG. ITEM	PART NUMBER	AIRLINE STOCK NUMBER	NOMENCLATURE 1234567	EFF CODE	UNITS PER ASSY
170A	NAS1801-08-6		. . . SCREW used on 080A, 080B		002
180A	ASNA0113-40ADL		. . . WASHER used on 080B		008
185A	ASNA0113-40ADL		. . . WASHER used on 080A, 080B		002
190A	NAS1096-2-7		. . . SCREW BUY PN NAS1801-08-7 used on 080B		004
200A	MS21042-08		. . . NUT used on 080B		004
210A	A225400234-214		. . . SCREW used on 080A, 080B		003
-220A	NAS1833C3-350		. . . INSERT used on 080A, 080B		003
-230A	NAS1835C08		. . . INSERT used on 080A, 080B		016
-240A	NAS1833C4-500		. . . INSERT used on 080A, 080B		004
-250A	NSA935405-01		. . . MOUNT used on 080A		003
260A	NAS1801-08-5		. . SCREW POST SB 25-1674 used on 001A, 001B		001
270A	NAS1149CN832R		. . WASHER POST SB 25-1674 used on 001A, 001B		001

- ITEM NOT ILLUSTRATED

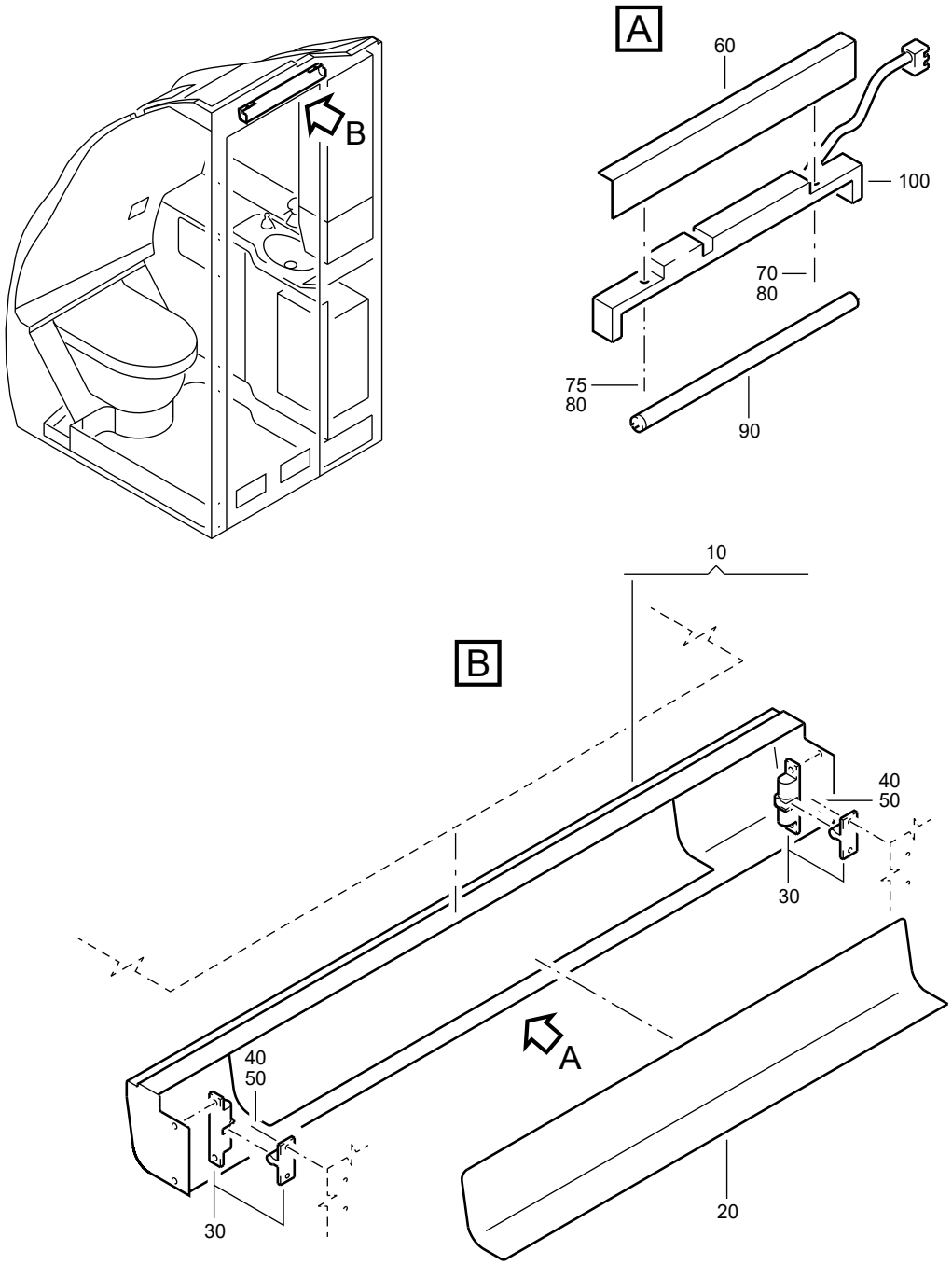

F_PL_254151_14_0_01_00

LIGHT-DOOR
Figure 14/EN254151SHEET14001

FIG. ITEM	PART NUMBER	AIRLINE STOCK NUMBER	NOMENCLATURE 1234567	EFF CODE	UNITS PER ASSY
14					
-001A	D2549010500073		. LIGHT-DOOR NP used on 100A (254151010), 100A (25415101A), 100A(25415101B), 100A (25415101C), 100A (25415101D), 100A(25415101E), 100A (25415101F), 100A (25415101G), 100B(25415101H), 100D (25415101K), 100C (25415101L), 100C(25415101M), 100D (25415101N), 100C (25415141T) SEE 25-41-51-010 FOR NHA SEE 25-41-51-01A FOR NHA SEE 25-41-51-01B FOR NHA SEE 25-41-51-01C FOR NHA SEE 25-41-51-01D FOR NHA SEE 25-41-51-01E FOR NHA SEE 25-41-51-01F FOR NHA SEE 25-41-51-01G FOR NHA SEE 25-41-51-01H FOR NHA SEE 25-41-51-01K FOR NHA SEE 25-41-51-01L FOR NHA SEE 25-41-51-01M FOR NHA SEE 25-41-51-01N FOR NHA SEE 25-41-51-41T FOR NHA		RF
-001B	D2549020500073		. LIGHT-DOOR NP used on 100B (254151010), 100B (25415101A), 100B(25415101B), 100B (25415101D), 100B (25415101E), 100B(25415101F) SEE 25-41-51-010 FOR NHA SEE 25-41-51-01A FOR NHA SEE 25-41-51-01B FOR NHA SEE 25-41-51-01D FOR NHA SEE 25-41-51-01E FOR NHA SEE 25-41-51-01F FOR NHA		RF

- ITEM NOT ILLUSTRATED

FIG. ITEM	PART NUMBER	AIRLINE STOCK NUMBER	NOMENCLATURE 1234567	EFF CODE	UNITS PER ASSY
-001C	D2549020600473		. LIGHT-DOOR NP used on 100C (254151410) SEE 25-41-51-410 FOR NHA		RF
-001D	D2549020602673		. LIGHT-DOOR NP used on 100B (25415101G), 100A (25415101H), 100A (25415101J), 100B (25415101K), 100A (25415101L), 100A (25415101M), 100A (25415101N), 100B (25415101P), 100A(25415101R), 100C (25415101T), 100D (254151410), 100B(25415141B) SEE 25-41-51-01G FOR NHA SEE 25-41-51-01H FOR NHA SEE 25-41-51-01J FOR NHA SEE 25-41-51-01K FOR NHA SEE 25-41-51-01L FOR NHA SEE 25-41-51-01M FOR NHA SEE 25-41-51-01N FOR NHA SEE 25-41-51-01P FOR NHA SEE 25-41-51-01R FOR NHA SEE 25-41-51-01T FOR NHA SEE 25-41-51-410 FOR NHA SEE 25-41-51-41B FOR NHA		RF
-001E	D2549020602873		. LIGHT-DOOR NP used on 100C (25415101G), 100B (25415101J), 100C (25415101K), 100B (25415101M), 100A (25415101P) SEE 25-41-51-01G FOR NHA SEE 25-41-51-01J FOR NHA SEE 25-41-51-01K FOR NHA SEE 25-41-51-01M FOR NHA SEE 25-41-51-01P FOR NHA		RF

- ITEM NOT ILLUSTRATED

FIG. ITEM	PART NUMBER	AIRLINE STOCK NUMBER	NOMENCLATURE 1234567	EFF CODE	UNITS PER ASSY
-001F	D2549030505673		. LIGHT-DOOR NP used on 100A (25415101K), 100C (25415101P) SEE 25-41-51-01K FOR NHA SEE 25-41-51-01P FOR NHA		RF
-001G	D2549030506073		. LIGHT-DOOR NP used on 100C (25415141B) SEE 25-41-51-41B FOR NHA		RF

- ITEM NOT ILLUSTRATED

FIG. ITEM	PART NUMBER	AIRLINE STOCK NUMBER	NOMENCLATURE 1234567	EFF CODE	UNITS PER ASSY
-001H	D2549010512673		. LIGHT-DOOR NP PRE VSB A2-254-25-106 PRE VSB A2-254-25-130 used on 100B (25415101L), 100D (25415101P), 100C(25415101Q), 100B (25415101R), 100B (25415101S), 100A(25415101T), 100A (25415101U), 100A (25415101V), 100A(25415101W), 100A (25415101X), 100A (25415101Y), 100A(25415101Z), 100A (254151410), 100A (25415141A), 100D(25415141B), 100A (25415141C), 100A (25415141D), 090A(25415141E), 100C (25415141F), 100C (25415141G), 100A(25415141H), 100A (25415141J), 100A (25415141K), 100A(25415141L), 100A (25415141M), 100B (25415141N), 100A(25415141P), 110A (25415141Q), 100B (25415141R), 100A(25415141S), 100A (25415141T), 100A (25415141U), 100A(25415141V), 100A (25415141W), 100A (25415141X), 100A(25415141Y), 100A (25415141Z), 100C (254151420), 100A(25415142A), 100A (25415142B), 100A (25415142C), 100A(25415142D), 100B (25415142E), 100A (25415142F), 100A(25415142G), 100B (25415142H), 100A (25415142J), 100A(25415142K), 100A (25415142L), 100A (25415142M), 100A(25415142N), 100A (25415142P), 100A (25415142Q), 100D(25415142R),		RF

- ITEM NOT ILLUSTRATED

FIG. ITEM	PART NUMBER	AIRLINE STOCK NUMBER	NOMENCLATURE 1234567	EFF CODE	UNITS PER ASSY
			100A (25415142S), 100C (25415142T), 100B(25415142U) SEE 25-41-51-01L FOR NHA SEE 25-41-51-01P FOR NHA SEE 25-41-51-01Q FOR NHA SEE 25-41-51-01R FOR NHA SEE 25-41-51-01S FOR NHA SEE 25-41-51-01T FOR NHA SEE 25-41-51-01U FOR NHA SEE 25-41-51-01V FOR NHA SEE 25-41-51-01W FOR NHA SEE 25-41-51-01X FOR NHA SEE 25-41-51-01Y FOR NHA SEE 25-41-51-01Z FOR NHA SEE 25-41-51-410 FOR NHA SEE 25-41-51-41A FOR NHA SEE 25-41-51-41B FOR NHA SEE 25-41-51-41C FOR NHA SEE 25-41-51-41D FOR NHA SEE 25-41-51-41E FOR NHA SEE 25-41-51-41F FOR NHA SEE 25-41-51-41G FOR NHA SEE 25-41-51-41H FOR NHA SEE 25-41-51-41J FOR NHA SEE 25-41-51-41K FOR NHA SEE 25-41-51-41L FOR NHA SEE 25-41-51-41M FOR NHA SEE 25-41-51-41N FOR NHA SEE 25-41-51-41P FOR NHA SEE 25-41-51-41Q FOR NHA SEE 25-41-51-41R FOR NHA SEE 25-41-51-41S FOR NHA SEE 25-41-51-41T FOR NHA SEE 25-41-51-41U FOR NHA SEE 25-41-51-41V FOR NHA SEE 25-41-51-41W FOR NHA SEE 25-41-51-41X FOR NHA SEE 25-41-51-41Y FOR NHA SEE 25-41-51-41Z FOR NHA SEE 25-41-51-420 FOR NHA		

- ITEM NOT ILLUSTRATED

FIG. ITEM	PART NUMBER	AIRLINE STOCK NUMBER	NOMENCLATURE 1234567		EFF CODE	UNITS PER ASSY
			SEE 25-41-51-42A FOR NHA SEE 25-41-51-42B FOR NHA SEE 25-41-51-42C FOR NHA SEE 25-41-51-42D FOR NHA SEE 25-41-51-42E FOR NHA SEE 25-41-51-42F FOR NHA SEE 25-41-51-42G FOR NHA SEE 25-41-51-42H FOR NHA SEE 25-41-51-42J FOR NHA SEE 25-41-51-42K FOR NHA SEE 25-41-51-42L FOR NHA SEE 25-41-51-42M FOR NHA SEE 25-41-51-42N FOR NHA SEE 25-41-51-42P FOR NHA SEE 25-41-51-42Q FOR NHA SEE 25-41-51-42R FOR NHA SEE 25-41-51-42S FOR NHA SEE 25-41-51-42T FOR NHA SEE 25-41-51-42U FOR NHA			
-001J	D2549020610273		. LIGHT-DOOR used on 100B (25415101N), 100C (25415101Y) SEE 25-41-51-01N FOR NHA SEE 25-41-51-01Y FOR NHA	NP		RF
-001K	D2549010513873		. LIGHT-DOOR used on 100A (25415141B) SEE 25-41-51-41B FOR NHA	NP		RF
-001L	D2549030507273		. LIGHT-DOOR used on 100C (25415101N) SEE 25-41-51-01N FOR NHA	NP		RF

- ITEM NOT ILLUSTRATED

FIG. ITEM	PART NUMBER	AIRLINE STOCK NUMBER	NOMENCLATURE 1234567	EFF CODE	UNITS PER ASSY
-001M	D2549030508473		. LIGHT-DOOR NP used on 100A (25415101Q), 100D (25415101S), 100C (25415101V), 100B (25415101W), 100C (25415101Z), 100F(25415141B), 100B (25415141D), 100B (25415141G), 100C(25415141M), 100A (25415141N), 100C (25415141W) SEE 25-41-51-01Q FOR NHA SEE 25-41-51-01S FOR NHA SEE 25-41-51-01V FOR NHA SEE 25-41-51-01W FOR NHA SEE 25-41-51-01Z FOR NHA SEE 25-41-51-41B FOR NHA SEE 25-41-51-41D FOR NHA SEE 25-41-51-41G FOR NHA SEE 25-41-51-41M FOR NHA SEE 25-41-51-41N FOR NHA SEE 25-41-51-41W FOR NHA		RF

- ITEM NOT ILLUSTRATED

FIG. ITEM	PART NUMBER	AIRLINE STOCK NUMBER	NOMENCLATURE 1234567	EFF CODE	UNITS PER ASSY
-001N	D2549020613673		. LIGHT-DOOR NP used on 100B (25415101Q), 100B (25415101T), 100D (25415101V), 100D (25415101W), 100B (25415101Y), 100E(25415141B), 100D (25415141D), 100D (25415141G), 100C(25415141H), 100B (25415141K), 100B (25415141M), 100C(25415141N), 100B (25415141T), 100D (25415141W), 100C(25415141X), 100A (254151420), 100C (25415142E) SEE 25-41-51-01Q FOR NHA SEE 25-41-51-01T FOR NHA SEE 25-41-51-01V FOR NHA SEE 25-41-51-01W FOR NHA SEE 25-41-51-01Y FOR NHA SEE 25-41-51-41B FOR NHA SEE 25-41-51-41D FOR NHA SEE 25-41-51-41G FOR NHA SEE 25-41-51-41H FOR NHA SEE 25-41-51-41K FOR NHA SEE 25-41-51-41M FOR NHA SEE 25-41-51-41N FOR NHA SEE 25-41-51-41T FOR NHA SEE 25-41-51-41W FOR NHA SEE 25-41-51-41X FOR NHA SEE 25-41-51-420 FOR NHA SEE 25-41-51-42E FOR NHA		RF

- ITEM NOT ILLUSTRATED

FIG. ITEM	PART NUMBER	AIRLINE STOCK NUMBER	NOMENCLATURE 1234567	EFF CODE	UNITS PER ASSY
-001P	R22540166200073		. LIGHT-DOOR NP POST VSB A2-254-25-106 used on 100B (25415142C), 100E (25415142G), 100D (25415142L), 100F (25415142T) SEE 25-41-51-42C FOR NHA SEE 25-41-51-42G FOR NHA SEE 25-41-51-42L FOR NHA SEE 25-41-51-42T FOR NHA		RF
010A	A225401445-500		. . COVER ASSY-LAMP PRE VSB A2-254-25-130 PRE VSB A2-254-25-106 used on 001A, 001D, 001H		001
-010B	A225401445-502		. . COVER ASSY-LAMP used on 001B, 001E, 001N		001
-010C	A225401445-504		. . COVER ASSY-LAMP used on 001C		001
-010D	A225401445-506		. . COVER ASSY-LAMP used on 001F		001
-010E	A225401445-508		. . COVER ASSY-LAMP used on 001G, 001M		001
-010F	A225401445-514		. . COVER ASSY-LAMP used on 001J		001
-010G	A225401445-510		. . COVER ASSY-LAMP used on 001K		001
-010H	A225401445-512		. . COVER ASSY-LAMP used on 001L		001
-010J	A225401445-520		. . COVER ASSY-LAMP POST VSB A2-254-25-106 used on 001P		001

- ITEM NOT ILLUSTRATED

FIG. ITEM	PART NUMBER	AIRLINE STOCK NUMBER	NOMENCLATURE 1234567	EFF CODE	UNITS PER ASSY
020A	5L0036400104000		. . . LENS used on 010A, 010B, 010C, 010D, 010E, 010F, 010G, 010H, 010J		001
030A	244-20-102		. . . CATCH-DOUBLE SPRING BALL used on 010A, 010B, 010C, 010D, 010E, 010F, 010G, 010H, 010J		002
040A	NAS1102-06-4		. . SCREW used on 001A, 001B, 001C, 001D, 001E, 001F, 001G, 001H, 001J, 001K, 001L, 001M, 001N, 001P		004
050A	AN960C6		. . WASHER BUY PN NAS1149CN632R used on 001A, 001B, 001C		004
-050B	NAS1149CN632R		. . WASHER used on 001D, 001E, 001F, 001G, 001H, 001J, 001K, 001L, 001M, 001N, 001P		004
060A	A392500307-200		. . REFLECTOR PRE VSB A2-254-25-130 used on 001H, 001M, 001N, 001P		001
070A	NAS1102-08-26		. . SCREW PRE VSB A2-254-25-130 used on 001A, 001B, 001C, 001D, 001E, 001F, 001G, 001H, 001J, 001K, 001L, 001M, 001N, 001P		001

- ITEM NOT ILLUSTRATED

FIG. ITEM	PART NUMBER	AIRLINE STOCK NUMBER	NOMENCLATURE 1234567	EFF CODE	UNITS PER ASSY
075A	NAS1102-08-24		. . SCREW PRE VSB A2-254-25-130 used on 001A, 001B, 001C, 001D, 001E, 001F, 001G, 001H, 001J, 001K, 001L, 001M, 001N, 001P		001
080A	0-123-000700000		. . WASHER PRE VSB A2-254-25-130 used on 001A, 001B, 001C, 001D, 001E, 001F, 001G, 001H, 001J, 001K, 001L, 001M, 001N, 001P		002
090A	ABS0201-06G		. . LAMP-FLUORESCENT PRE VSB A2-254-25-130 BUY PN ABS1238-26-15B used on 001A, 001B, 001C, 001D, 001E, 001F, 001G, 001H, 001J, 001K, 001L, 001M, 001N, 001P SEE SIL 33-0051 FOR DET		001
100A	3250-30		. . BALLAST UNIT PRE VSB A2-254-25-130 used on 001A, 001B, 001C, 001D, 001E, 001F, 001G, 001H, 001J, 001K, 001L, 001M, 001N, 001P		001

- ITEM NOT ILLUSTRATED

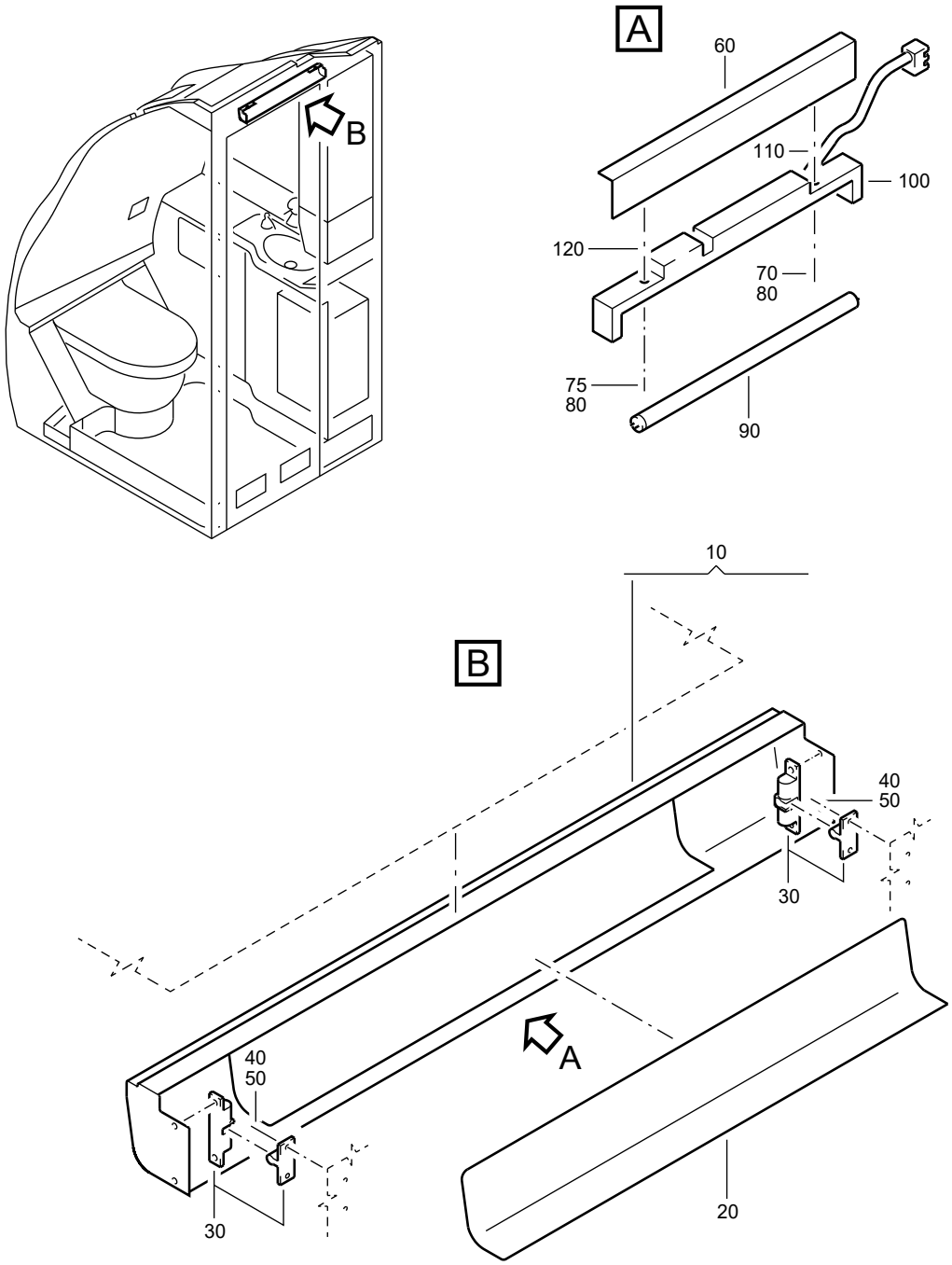

F_PL_254151_14_A_01_00

LIGHT-DOOR
Figure 14A/EN254151SHEET14A01

FIG. ITEM	PART NUMBER	AIRLINE STOCK NUMBER	NOMENCLATURE 1234567	EFF CODE	UNITS PER ASSY
14A -001A	D2549010600273		. LIGHT-DOOR NP used on 100D (25415101Q), 100C (25415101S), 100B (25415101U), 100B (25415101V), 100B (25415101Z), 100C(25415141A), 100C (25415141D), 100B (25415141F), 100B(25415141H), 100C (25415141J), 100B (25415141L) SEE 25-41-51-01Q FOR NHA SEE 25-41-51-01S FOR NHA SEE 25-41-51-01U FOR NHA SEE 25-41-51-01V FOR NHA SEE 25-41-51-01Z FOR NHA SEE 25-41-51-41A FOR NHA SEE 25-41-51-41D FOR NHA SEE 25-41-51-41F FOR NHA SEE 25-41-51-41H FOR NHA SEE 25-41-51-41J FOR NHA SEE 25-41-51-41L FOR NHA		RF

- ITEM NOT ILLUSTRATED

FIG. ITEM	PART NUMBER	AIRLINE STOCK NUMBER	NOMENCLATURE 1234567	EFF CODE	UNITS PER ASSY
-001B	D2549030508673		. LIGHT-DOOR NP used on 100E (25415101Q), 100C (25415101U), 100B (25415101X), 100D (25415101Y), 100B (25415141C), 100A (25415141F), 100D (25415141H), 100D (25415141N), 100B (25415141W), 100B (25415141X), 100B (254151420) SEE 25-41-51-01Q FOR NHA SEE 25-41-51-01U FOR NHA SEE 25-41-51-01X FOR NHA SEE 25-41-51-01Y FOR NHA SEE 25-41-51-41C FOR NHA SEE 25-41-51-41F FOR NHA SEE 25-41-51-41H FOR NHA SEE 25-41-51-41N FOR NHA SEE 25-41-51-41W FOR NHA SEE 25-41-51-41X FOR NHA SEE 25-41-51-420 FOR NHA		RF

- ITEM NOT ILLUSTRATED

FIG. ITEM	PART NUMBER	AIRLINE STOCK NUMBER	NOMENCLATURE 1234567	EFF CODE	UNITS PER ASSY
-001C	D2549020612273		. LIGHT-DOOR NP used on 100A (25415101S), 100C (25415101W), 100B (254151410), 100E (25415141G), 100B (25415141P), 100B (25415141Z), 100B (25415142F), 100D (25415142G), 100A (25415142H), 100B (25415142R), 100B (25415142T) SEE 25-41-51-01S FOR NHA SEE 25-41-51-01W FOR NHA SEE 25-41-51-410 FOR NHA SEE 25-41-51-41G FOR NHA SEE 25-41-51-41P FOR NHA SEE 25-41-51-41Z FOR NHA SEE 25-41-51-42F FOR NHA SEE 25-41-51-42G FOR NHA SEE 25-41-51-42H FOR NHA SEE 25-41-51-42R FOR NHA SEE 25-41-51-42T FOR NHA		RF
-001D	D2549010514073		. LIGHT-DOOR NP used on 100E (25415101P), 100C (25415101X), 100E (25415101Y), 100A (25415141G), 100E (25415141N), 100A(25415141R), 100D (254151420), 100B (25415142J) SEE 25-41-51-01P FOR NHA SEE 25-41-51-01X FOR NHA SEE 25-41-51-01Y FOR NHA SEE 25-41-51-41G FOR NHA SEE 25-41-51-41N FOR NHA SEE 25-41-51-41R FOR NHA SEE 25-41-51-420 FOR NHA SEE 25-41-51-42J FOR NHA		RF

- ITEM NOT ILLUSTRATED

FIG. ITEM	PART NUMBER	AIRLINE STOCK NUMBER	NOMENCLATURE 1234567	EFF CODE	UNITS PER ASSY
-001E	D2549020710073		. LIGHT-DOOR NP used on 100B (25415141A), 100B (25415141J), 100C(25415141R), 100B (25415141V), 100B (25415141Y), 100A(25415142E), 100B (25415142K) SEE 25-41-51-41A FOR NHA SEE 25-41-51-41J FOR NHA SEE 25-41-51-41R FOR NHA SEE 25-41-51-41V FOR NHA SEE 25-41-51-41Y FOR NHA SEE 25-41-51-42E FOR NHA SEE 25-41-51-42K FOR NHA		RF
-001F	D2549040500273		. LIGHT-DOOR NP used on 100B (25415142B), 100C (25415142G), 100C (25415142H), 100D (25415142K) SEE 25-41-51-42B FOR NHA SEE 25-41-51-42G FOR NHA SEE 25-41-51-42H FOR NHA SEE 25-41-51-42K FOR NHA		RF
-001G	D2549030408273		. LIGHT-DOOR NP used on 100B (25415142D), 100B (25415142L), 100C (25415142N), 100D (25415142S), 100E (25415142T) SEE 25-41-51-42D FOR NHA SEE 25-41-51-42L FOR NHA SEE 25-41-51-42N FOR NHA SEE 25-41-51-42S FOR NHA SEE 25-41-51-42T FOR NHA		RF

- ITEM NOT ILLUSTRATED

FIG. ITEM	PART NUMBER	AIRLINE STOCK NUMBER	NOMENCLATURE 1234567		EFF CODE	UNITS PER ASSY
-001H	D2549030414673		. LIGHT-DOOR used on 100B (25415142N), 100B (25415142Q), 100A (25415142R), 100C (25415142S), 100C (25415142U) SEE 25-41-51-42N FOR NHA SEE 25-41-51-42Q FOR NHA SEE 25-41-51-42R FOR NHA SEE 25-41-51-42S FOR NHA SEE 25-41-51-42U FOR NHA	NP		RF
-001J	D2549030414273		. LIGHT-DOOR used on 100C (25415142L), 100C (25415142R), 100D(25415142T) SEE 25-41-51-42L FOR NHA SEE 25-41-51-42R FOR NHA SEE 25-41-51-42T FOR NHA	NP		RF
-001K	D2549020411273		. LIGHT-DOOR used on 100D (25415142Q) SEE 25-41-51-42Q FOR NHA	NP		RF
-001L	D2549040501673		. LIGHT-DOOR used on 100B (25415142M), 100D (25415142N), 100B (25415142P), 100C (25415142Q), 100E (25415142R), 100B(25415142S), 100A (25415142T), 100A (25415142U) SEE 25-41-51-42M FOR NHA SEE 25-41-51-42N FOR NHA SEE 25-41-51-42P FOR NHA SEE 25-41-51-42Q FOR NHA SEE 25-41-51-42R FOR NHA SEE 25-41-51-42S FOR NHA SEE 25-41-51-42T FOR NHA SEE 25-41-51-42U FOR NHA	NP		RF

- ITEM NOT ILLUSTRATED

FIG. ITEM	PART NUMBER	AIRLINE STOCK NUMBER	NOMENCLATURE 1234567	EFF CODE	UNITS PER ASSY
-001M	D2549030702073		. LIGHT-DOOR NP used on 100F (25415142R) SEE 25-41-51-42R FOR NHA		RF
-001N	D2547160007473		. LIGHT-DOOR NP POST SB 25-1640 used on 100C (25415101H), 100D (25415101L), 100D (25415141F), 100E (25415141H), 100C (25415142B) SEE 25-41-51-01H FOR NHA SEE 25-41-51-01L FOR NHA SEE 25-41-51-41F FOR NHA SEE 25-41-51-41H FOR NHA SEE 25-41-51-42B FOR NHA		RF
010A	A225401445-510		. . COVER ASSY-LAMP used on 001A		001
-010B	A225401445-512		. . COVER ASSY-LAMP used on 001B		001
-010C	A225401445-514		. . COVER ASSY-LAMP used on 001C		001
-010D	A225401445-506		. . COVER ASSY-LAMP used on 001D		001
-010E	A225401445-516		. . COVER ASSY-LAMP used on 001E		001
-010F	A225401445-800		. . COVER ASSY-LAMP POST SB 25-1640 used on 001F, 001L, 001N		001
-010G	A225401445-518		. . COVER ASSY-LAMP used on 001G		001
-010H	A225401445-802		. . COVER ASSY-LAMP used on 001H		001

- ITEM NOT ILLUSTRATED

FIG. ITEM	PART NUMBER	AIRLINE STOCK NUMBER	NOMENCLATURE 1234567	EFF CODE	UNITS PER ASSY
-010J	A225401445-804		. . COVER ASSY-LAMP used on 001J		001
-010K	A225401445-806		. . COVER ASSY-LAMP used on 001K		001
-010L	A225401445-808		. . COVER ASSY-LAMP used on 001M		001
020A	5L0036400104000		. . . LENS used on 010A, 010B, 010C, 010D, 010E, 010F, 010G, 010H, 010J, 010K, 010L		001
030A	244-20-102		. . . CATCH-DOUBLE SPRING BALL used on 010A, 010B, 010C, 010D, 010E, 010F, 010G, 010H, 010J, 010K, 010L		002
-030B	244-20-004		. . . CATCH-DOUBLE SPRING BALL used on 010A, 010B, 010C, 010D, 010E, 010F, 010G, 010H, 010J, 010K, 010L		002
040A	NAS1102-06-4		. . SCREW used on 001A, 001B, 001C, 001D, 001E, 001F, 001G, 001H, 001J, 001K, 001L, 001M, 001N		004
050A	NAS1149CN632R		. . WASHER used on 001A, 001B, 001C, 001D, 001E, 001F, 001G, 001H, 001J, 001K, 001L, 001M, 001N		004
060A	A392500307-200		. . REFLECTOR used on 001A, 001B, 001C, 001D, 001E, 001F, 001G, 001H, 001J, 001K, 001L, 001M, 001N		001

- ITEM NOT ILLUSTRATED

FIG. ITEM	PART NUMBER	AIRLINE STOCK NUMBER	NOMENCLATURE 1234567	EFF CODE	UNITS PER ASSY
070A	NAS1102-08-26		. . SCREW used on 001A, 001B, 001C, 001D, 001E, 001G		001
-070B	NAS1102-08-28		. . SCREW POST SB 25-1640 used on 001F, 001H, 001J, 001K, 001L, 001M, 001N		001
075A	NAS1102-08-24		. . SCREW used on 001A, 001B, 001C, 001D, 001E, 001G		001
-075B	NAS1102-08-28		. . SCREW POST SB 25-1640 used on 001F, 001H, 001J, 001K, 001L, 001M, 001N		001
080A	0-123-000700000		. . WASHER used on 001A, 001B, 001C, 001D, 001E, 001F, 001G, 001H, 001J, 001K, 001L, 001M, 001N		002
090A	ABS0201-06G		. . LAMP-FLUORESCENT BUY PN ABS1238-26-15B used on 001A, 001B, 001C, 001D, 001E, 001G SEE SIL 33-0051 FOR DET		001
-090B	ABS0201-06K		. . LAMP-FLUORESCENT BUY PN ABS1238-26-15B used on 001F, 001H, 001J, 001K, 001L, 001M SEE SIL 33-0051 FOR DET		001
-090C	ABS1238-26-15B		. . LAMP-FLUORESCENT POST SB 25-1640 used on 001N		001

- ITEM NOT ILLUSTRATED

FIG. ITEM	PART NUMBER	AIRLINE STOCK NUMBER	NOMENCLATURE 1234567	EFF CODE	UNITS PER ASSY
100A	3250-30		. . BALLAST UNIT used on 001A, 001B, 001C, 001D, 001E, 001G		001
-100B	4197-10-01		. . BALLAST UNIT-ADVANCED INTEGRATED used on 001F, 001H, 001J, 001K, 001L, 001M, 001N		001
-100C	4197-10-02		. . BALLAST UNIT-ADVANCED INTEGRATED POST SB 25-1640 used on 001F, 001H, 001J, 001K, 001L, 001M, 001N		001
110A	A292500309-200		. . SPACER POST SB 25-1640 used on 001F, 001H, 001J, 001K, 001L, 001M, 001N		001
120A	4262-10		. . SPACER POST SB 25-1640 used on 001F, 001H, 001J, 001K, 001L, 001M, 001N		001

- ITEM NOT ILLUSTRATED

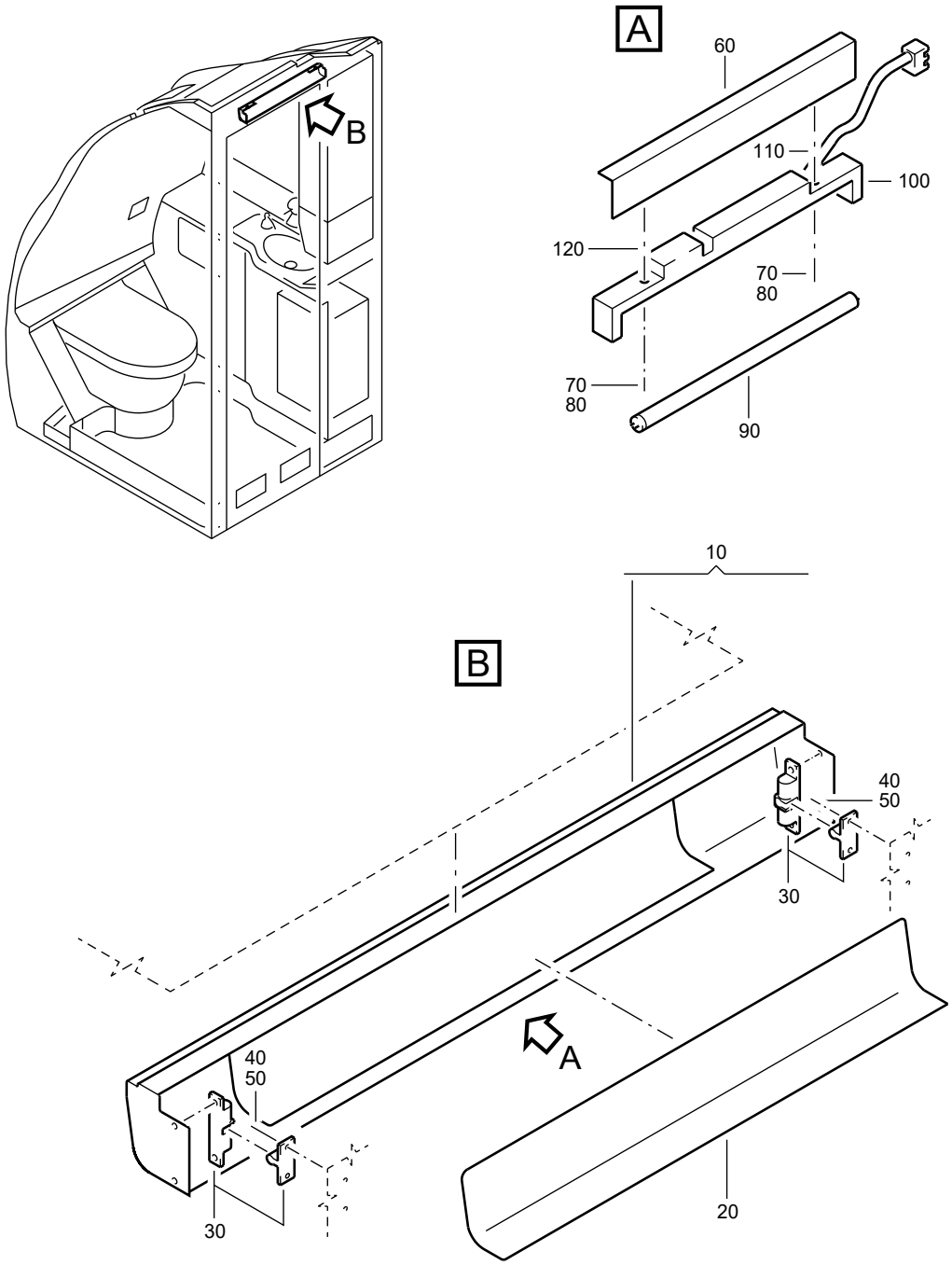

F_PL_254151_14_B_01_00

LIGHT-DOOR
Figure 14B/EN254151SHEET14B01

FIG. ITEM	PART NUMBER	AIRLINE STOCK NUMBER	NOMENCLATURE 1234567		EFF CODE	UNITS PER ASSY
14B						
-001A	D2549030409673		. LIGHT-DOOR used on 100B (25415142G) SEE 25-41-51-42G FOR NHA	NP		RF
-001B	D2549030410873		. LIGHT-DOOR used on 100C (25415142K) SEE 25-41-51-42K FOR NHA	NP		RF
-001C	D2547161202873		. LIGHT-DOOR POST SB 25-1674 used on 100D (25415141M), 100E (25415142N) SEE 25-41-51-41M FOR NHA SEE 25-41-51-42N FOR NHA	NP		RF
010A	A225401445-802		. . COVER ASSY-LAMP used on 001A, 001C			001
-010B	A225401445-804		. . COVER ASSY-LAMP used on 001B			001
020A	5L0036400104000		. . . LENS used on 010A, 010B			001
030A	244-20-004		. . . CATCH-DOUBLE SPRING BALL used on 010A, 010B			002
040A	NAS1102-06-4		. . SCREW used on 001A, 001B, 001C			004
050A	NAS1149CN632R		. . WASHER used on 001A, 001B, 001C			004
060A	A392500307-200		. . REFLECTOR used on 001A, 001B, 001C			001
070A	NAS1102-08-28		. . SCREW used on 001A, 001B, 001C			002

- ITEM NOT ILLUSTRATED

FIG. ITEM	PART NUMBER	AIRLINE STOCK NUMBER	NOMENCLATURE 1234567	EFF CODE	UNITS PER ASSY
080A	0-123-000700000		. . WASHER used on 001A, 001B, 001C		002
090A	ABS0201-06K		. . LAMP-FLUORESCENT BUY PN ABS1238-26-15B used on 001A, 001B SEE SIL 33-0051 FOR DET		001
-090B	ABS1238-26-15B		. . LAMP-FLUORESCENT POST SB 25-1674 used on 001C		001
100A	4197-10-01		. . BALLAST UNIT-ADVANCED INTEGRATED used on 001A, 001B		001
-100B	4197-10-04		. . BALLAST UNIT-ADVANCED INTEGRATED POST SB 25-1674 used on 001C		001
110A	A292500309-200		. . SPACER used on 001A, 001B, 001C		001
120A	4262-10		. . SPACER used on 001A, 001B, 001C		001

- ITEM NOT ILLUSTRATED

THIS PAGE IS INTENTIONALLY LEFT BLANK

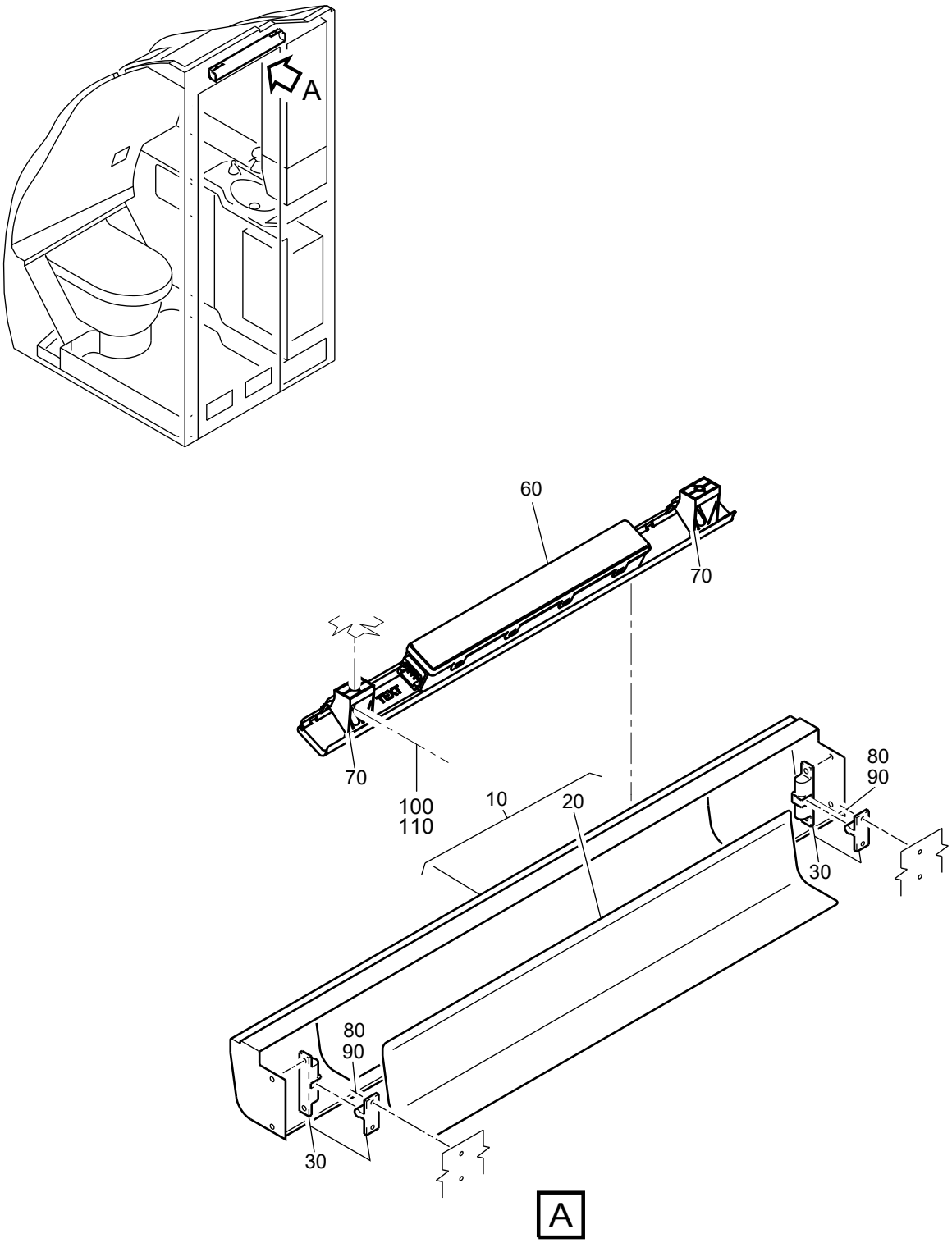

F_PL_254151_14_C_01_00

LIGHT-DOOR
Figure 14C/EN254151SHEET14C01

FIG. ITEM	PART NUMBER	AIRLINE STOCK NUMBER	NOMENCLATURE 1234567	EFF CODE	UNITS PER ASSY
14C					
-001A	R22540119604673		. LIGHT-DOOR NP POST VSB A2-254-25-130 used on 100E (254151410), 100C (25415141K), 100F (25415141N), 100D (25415141R), 100E (25415141W), 100D (25415141X), 100E (254151420), 100D (25415142E), 100C (25415142J), 100C (25415142P) SEE 25-41-51-410 FOR NHA SEE 25-41-51-41K FOR NHA SEE 25-41-51-41N FOR NHA SEE 25-41-51-41R FOR NHA SEE 25-41-51-41W FOR NHA SEE 25-41-51-41X FOR NHA SEE 25-41-51-420 FOR NHA SEE 25-41-51-42E FOR NHA SEE 25-41-51-42J FOR NHA SEE 25-41-51-42P FOR NHA		RF
010A	A225401445-514		. . COVER ASSY-LAMP POST VSB A2-254-25-130 used on 001A		001
020A	5L0036400104000		. . . LENS used on 010A		001
030A	244-20-102		. . . CATCH-DOUBLE SPRING BALL used on 010A		002
-040A	R292900390-000		. . CABLE, CLEDU POST VSB A2-254-25-130 used on 001A		001
-050A	NSA935401-04		. . TIE-CABLE POST VSB A2-254-25-130 used on 001A		001

- ITEM NOT ILLUSTRATED

FIG. ITEM	PART NUMBER	AIRLINE STOCK NUMBER	NOMENCLATURE 1234567	EFF CODE	UNITS PER ASSY
060A	1J512-01800-000		. . CLEDU POST VSB A2-254-25-130 used on 001A		001
070A	1X516-03000-000		. . BRACKET POST VSB A2-254-25-130 used on 001A		002
080A	NAS1102-06-4		. . SCREW used on 001A		004
090A	NAS1149CN632R		. . WASHER used on 001A		004
100A	NAS1801-08-12		. . SCREW POST VSB A2-254-25-130 used on 001A		002
110A	NAS1149CN832R		. . WASHER POST VSB A2-254-25-130 used on 001A		002

- ITEM NOT ILLUSTRATED

THIS PAGE IS INTENTIONALLY LEFT BLANK

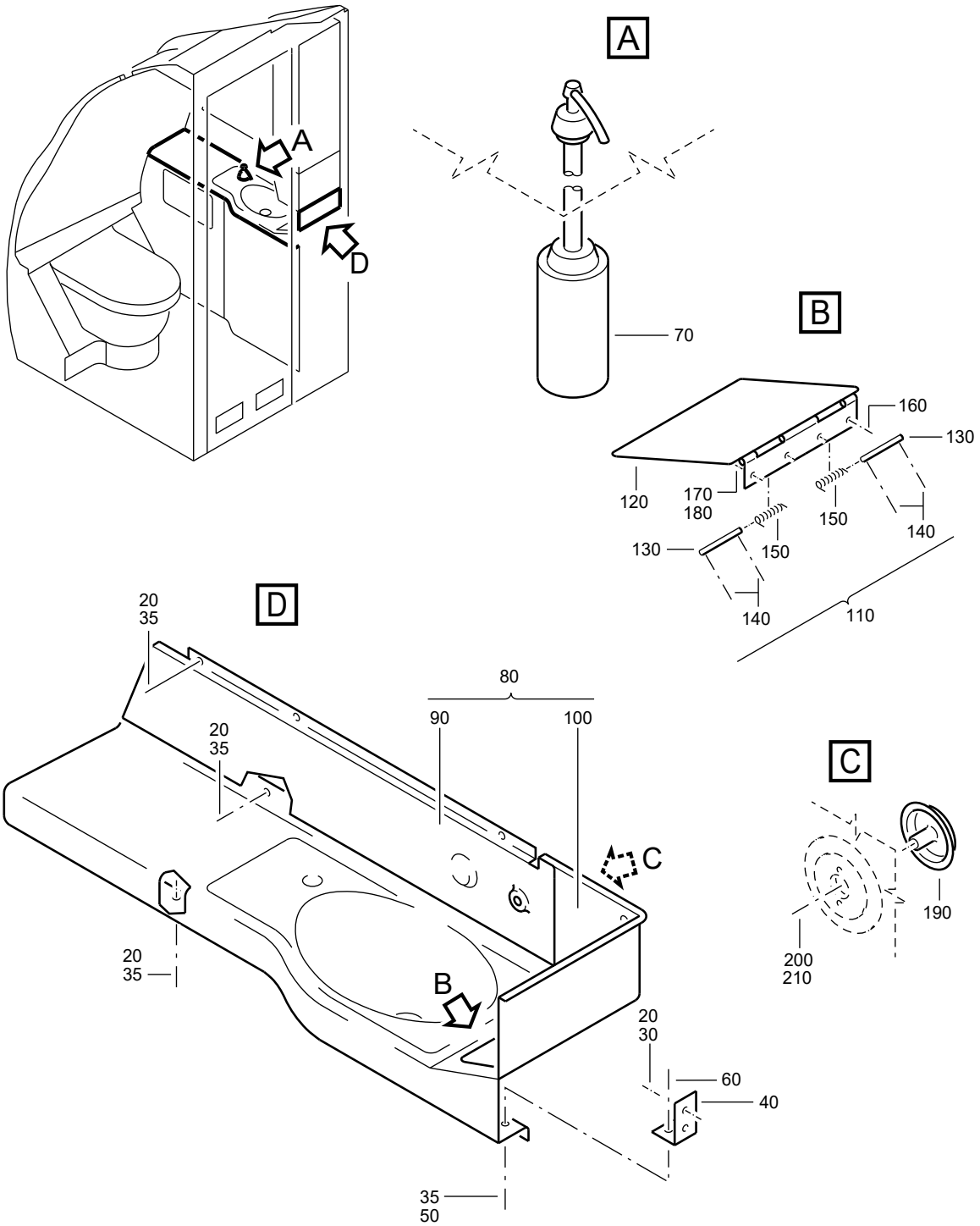

F_PL_254151_15_0_01_00

WASHBASIN UNIT
Figure 15/EN254151SHEET15001

FIG. ITEM	PART NUMBER	AIRLINE STOCK NUMBER	NOMENCLATURE 1234567	EFF CODE	UNITS PER ASSY
15 -001A	D2549010500074		. WASHBASIN UNIT NP used on 110A (254151010), 110B (25415101A), 110C(25415101B), 110B (25415101C), 110A (25415101E) SEE 25-41-51-010 FOR NHA SEE 25-41-51-01A FOR NHA SEE 25-41-51-01B FOR NHA SEE 25-41-51-01C FOR NHA SEE 25-41-51-01E FOR NHA		RF

- ITEM NOT ILLUSTRATED

FIG. ITEM	PART NUMBER	AIRLINE STOCK NUMBER	NOMENCLATURE 1234567	EFF CODE	UNITS PER ASSY
-001B	D2549020500274		. WASHBASIN UNIT NP PRE VSB A2-254-25-013 used on 110C (254151010), 110A (25415101A), 110A(25415101B), 110A (25415101C), 110A (25415101D), 110B(25415101E), 110A (25415101F), 110B (25415101G), 110C(25415101H), 110C (25415101J), 110F (25415101K), 110G(25415101L), 110G (25415101M), 110F (25415101N), 110B(25415141B), 110F (25415141T), 110G (25415141T) SEE 25-41-51-010 FOR NHA SEE 25-41-51-01A FOR NHA SEE 25-41-51-01B FOR NHA SEE 25-41-51-01C FOR NHA SEE 25-41-51-01D FOR NHA SEE 25-41-51-01E FOR NHA SEE 25-41-51-01F FOR NHA SEE 25-41-51-01G FOR NHA SEE 25-41-51-01H FOR NHA SEE 25-41-51-01J FOR NHA SEE 25-41-51-01K FOR NHA SEE 25-41-51-01L FOR NHA SEE 25-41-51-01M FOR NHA SEE 25-41-51-01N FOR NHA SEE 25-41-51-41B FOR NHA SEE 25-41-51-41T FOR NHA SEE 25-41-51-41T FOR NHA		RF
-001C	D2549010502474		. WASHBASIN UNIT NP POST SB 38-1055 used on 110C (25415101A), 110D (25415101G) SEE 25-41-51-01A FOR NHA SEE 25-41-51-01G FOR NHA		RF

- ITEM NOT ILLUSTRATED

FIG. ITEM	PART NUMBER	AIRLINE STOCK NUMBER	NOMENCLATURE 1234567		EFF CODE	UNITS PER ASSY
-001D	D2549010505674		. WASHBASIN UNIT POST SB 38-1055 used on 110B (25415101D), 110E (25415101G) SEE 25-41-51-01D FOR NHA SEE 25-41-51-01G FOR NHA	NP		RF
-001E	D2549010508074		. WASHBASIN UNIT used on 110A (25415101G) SEE 25-41-51-01G FOR NHA	NP		RF
-001F	D2549020602874		. WASHBASIN UNIT used on 110C (25415101G) SEE 25-41-51-01G FOR NHA	NP		RF
-001G	D2549020600474		. WASHBASIN UNIT used on 110F (254151410) SEE 25-41-51-410 FOR NHA	NP		RF
-001H	D2549030502674		. WASHBASIN UNIT PRE VSB A2-254-25-013 PRE VSB A2-254-25-032 used on 110C (25415101F), 110A (25415101H), 110F(25415101L) SEE 25-41-51-01F FOR NHA SEE 25-41-51-01H FOR NHA SEE 25-41-51-01L FOR NHA	NP		RF
-001J	D2549020500274		. WASHBASIN UNIT POST VSB A2-254-25-013 used on 110C (25415101C) SEE 25-41-51-01C FOR NHA	NP		RF
-001K	D2549030502674		. WASHBASIN UNIT POST VSB A2-254-25-013 used on 110D (25415101H), 110H (25415101L) SEE 25-41-51-01H FOR NHA SEE 25-41-51-01L FOR NHA	NP		RF

- ITEM NOT ILLUSTRATED

FIG. ITEM	PART NUMBER	AIRLINE STOCK NUMBER	NOMENCLATURE 1234567	EFF CODE	UNITS PER ASSY
-001L	D2549030502674		. WASHBASIN UNIT NP POST VSB A2-254-25-032 used on 110E (25415101H), 110J (25415101L) SEE 25-41-51-01H FOR NHA SEE 25-41-51-01L FOR NHA		RF
020A	NAS1096-2-6		. . SCREW BUY PN NAS1801-08-6 PRE VSB A2-254-25-032 used on 001A, 001B, 001C, 001D, 001E, 001F, 001G, 001H		014
-020B	NAS1096-2-6		. . SCREW POST VSB A2-254-25-032 used on 001L		002
-022A	NAS1801-08-24		. . SCREW POST VSB A2-254-25-032 used on 001J, 001K, 001L		002
-026A	NAS1801-08-5		. . SCREW POST VSB A2-254-25-032 used on 001J, 001K, 001L		010
030A	AN960C8		. . WASHER BUY PN NAS1149CN832R PRE VSB A2-254-25-032 used on 001A, 001B, 001F		002
-030B	NAS1149CN832R		. . WASHER used on 001C, 001D, 001E, 001G, 001H, 001L		002
-030C	NAS1149CN832R		. . WASHER used on 001J, 001K		002
-030D	ASNA0113-40ADL		. . WASHER POST VSB A2-254-25-032 used on 001L		002

- ITEM NOT ILLUSTRATED

FIG. ITEM	PART NUMBER	AIRLINE STOCK NUMBER	NOMENCLATURE 1234567	EFF CODE	UNITS PER ASSY
035A	AN960C10		. . WASHER BUY PN NAS1149C0363R used on 001A, 001B, 001F		013
-035B	NAS1149C0363R		. . WASHER PRE VSB A2-254-25-032 used on 001C, 001D, 001E, 001G, 001H		013
-035C	ASNA0113-40ADL		. . WASHER used on 001J, 001K		012
-035D	NAS1149CN832R		. . WASHER POST VSB A2-254-25-032 used on 001L		001
040A	A238100306-200		. . BRACKET used on 001A, 001B, 001C, 001D, 001E, 001F, 001G, 001H PRE VSB A2-254-25-013 PRE VSB A2-254-25-032		001
-040B	A225400420-008		. . BRACKET used on 001J, 001K. 001L POST VSB A2-254-25-013 POST VSB A2-254-25-032		001
050A	NAS1096-2-8		. . SCREW BUY PN NAS1801-08-8 used on 001A, 001B, 001C, 001D, 001E, 001F, 001G, 001H PRE VSB A2-254-25-032		001
-050B	NAS1801-08-8		. . SCREW used on 001J, 001K		002
-050C	NAS1801-08-8		. . SCREW used on 001L POST VSB A2-254-25-032		001

- ITEM NOT ILLUSTRATED

FIG. ITEM	PART NUMBER	AIRLINE STOCK NUMBER	NOMENCLATURE 1234567	EFF CODE	UNITS PER ASSY
060A	NSA5067-08-1		. . NUT used on 001A, 001B, 001C, 001D, 001E, 001F, 001G, 001H, 001L		001
070A	B822K40-10-11		. . DISPENSER-LIQUID SOAP used on 001A, 001C		001
-070B	B822-40-10		. . DISPENSER-LIQUID SOAP used on 001B, 001D, 001E, 001G, 001J		001
080A	233433ZB0		. . WASHBASIN ASSY PRE VSB A2-254-25-013 used on 001A, 001B		001
-080B	233435ZB0		. . WASHBASIN ASSY PRE VSB A2-254-25-013 PRE VSB A2-254-25-032 used on 001H		001
-080C	233434ZB0		. . WASHBASIN ASSY used on 001F		001
-080D	537002		. . WASHBASIN ASSY used on 001E		001
-080E	R381H000400800		. . WASHBASIN-RETROFITTED POST SB 38-1055 used on 001G		001
-080F	R381H000400200		. . WASHBASIN-RETROFITTED POST SB 38-1055 used on 001C, 001D		001
-080G	A238101255-002		. . WASHBASIN-ASSY POST VSB A2-254-25-013 POST VSB A2-254-25-032 used on 001J, 001K, 001L		001

- ITEM NOT ILLUSTRATED

FIG. ITEM	PART NUMBER	AIRLINE STOCK NUMBER	NOMENCLATURE 1234567	EFF CODE	UNITS PER ASSY
-082A	9855DV		. . . DAMPER POST VSB A2-254-25-013 POST VSB A2-254-25-032 used on 080G		001
-084A	A438100220-202		. . . BOLT POST VSB A2-254-25-032 used on 080G		002
-086A	A338100308-200		. . . WASHER POST VSB A2-254-25-032 used on 080G		008
-088A	DIN94-16X32ST		. . . PIN-COTTER POST VSB A2-254-25-032 used on 080G DIN94-1,6X32ST		002
090A	530658		. . . COVER-REAR used on 080A, 080E		001
-090B	530659		. . . COVER-REAR used on 080B, 080C, 080G		001
-090C	537008		. . . COVER-REAR used on 080D		001
-090D	530654		. . . COVER-REAR used on 080F		001
100A	530647		. . . WASHBASIN used on 080A, 080B, 080D, 080G		001
-100B	530646		. . . WASHBASIN used on 080C		001
-100C	R381H000420800		. . . WASHBASIN used on 080E		001
-100D	R381H000420200		. . . WASHBASIN used on 080F		001

- ITEM NOT ILLUSTRATED

FIG. ITEM	PART NUMBER	AIRLINE STOCK NUMBER	NOMENCLATURE 1234567	EFF CODE	UNITS PER ASSY
110A	0333163		. . . . FLAP ASSY used on 100A, 100B, 100C, 100D		001
120A	0242976		. . . . . FLAP used on 110A		001
130A	0234912		. . . . . PIN used on 110A		002
140A	0083636		. . . . . SPLINT used on 110A		004
150A	0234913		. . . . . SPRING used on 110A		004
160A	NAS1096-2-6		. . . . SCREW BUY PN NAS1801-08-6 used on 100A, 100B, 100C, 100D		004
170A	NAS1149CN832R		. . . . WASHER used on 100A, 100B, 100C, 100D		004
180A	NSA5067-08-1		. . . . NUT used on 100A, 100B, 100C, 100D		004
190A	A338199005-200		. . CAP-COVER POST SB 38-1055 used on 001C, 001D, 001G		001
200A	NAS1102-08-6		. . SCREW POST SB 38-1055 used on 001C, 001D, 001G		001
210A	DAN125-4		. . WASHER POST SB 38-1055 used on 001C, 001D, 001G		001

- ITEM NOT ILLUSTRATED

THIS PAGE IS INTENTIONALLY LEFT BLANK

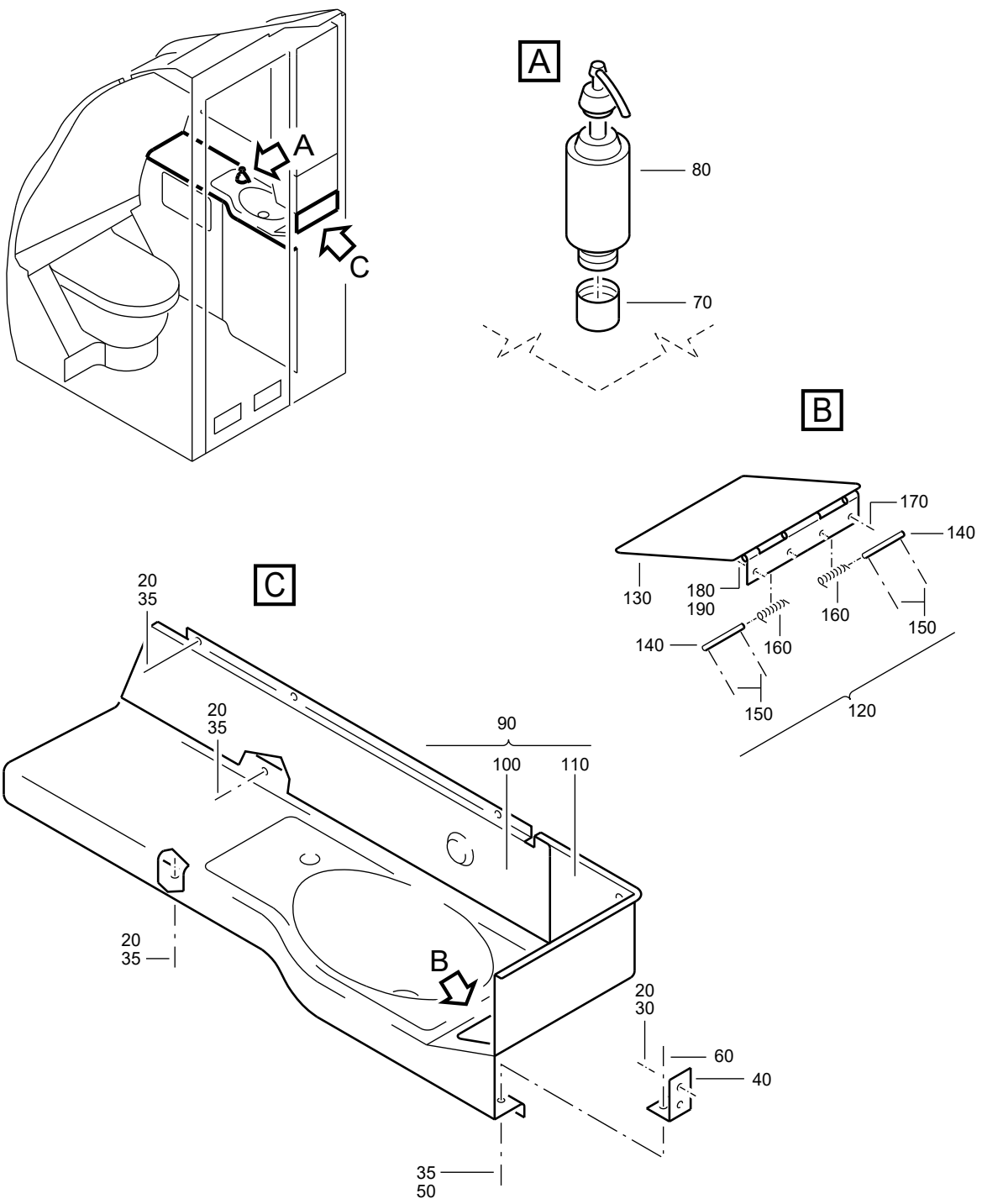

F_PL_254151_15_A_01_00

WASHBASIN UNIT
Figure 15A/EN254151SHEET15A01

FIG. ITEM	PART NUMBER	AIRLINE STOCK NUMBER	NOMENCLATURE 1234567	EFF CODE	UNITS PER ASSY
15A					
-001A	D2549020500074		. WASHBASIN UNIT NP used on 110B (254151010), 110D (25415101A), 110B(25415101B), 110C (25415101D), 110C (25415101E), 110B(25415101F) SEE 25-41-51-010 FOR NHA SEE 25-41-51-01A FOR NHA SEE 25-41-51-01B FOR NHA SEE 25-41-51-01D FOR NHA SEE 25-41-51-01E FOR NHA SEE 25-41-51-01F FOR NHA		RF
-001B	D2549010500474		. WASHBASIN UNIT NP used on 110D (254151010) SEE 25-41-51-010 FOR NHA		RF
020A	NAS1096-2-6		. . SCREW BUY PN NAS1801-08-6 used on 001A, 001B		014
030A	AN960C8		. . WASHER BUY PN NAS1149CN832R used on 001A, 001B		002
035A	AN960C10		. . WASHER BUY PN NAS1149C0363R used on 001A, 001B		013
040A	A238100306-200		. . BRACKET used on 001A, 001B		001
050A	NAS1096-2-8		. . SCREW BUY PN NAS1801-08-8 used on 001A, 001B		001
060A	NSA5067-08-1		. . NUT used on 001A, 001B		001

- ITEM NOT ILLUSTRATED

FIG. ITEM	PART NUMBER	AIRLINE STOCK NUMBER	NOMENCLATURE 1234567	EFF CODE	UNITS PER ASSY
070A	TRBASE125		. . SUPPORT-LIQUID SOAP DISPENSER used on 001A		001
-070B	TRBASE15		. . SUPPORT-LIQUID SOAP DISPENSER used on 001B		001
080A	CLE3013-5		. . DISPENSER-LIQUID SOAP used on 001A		001
-080B	TRBR10W		. . BOTTLE-LIQUID SOAP DISPENSER used on 001B		001
090A	236119ZB0		. . WASHBASIN ASSY used on 001A		001
-090B	233433ZB0		. . WASHBASIN ASSY used on 001B		001
100A	530658		. . . COVER-REAR used on 090A, 090B		001
110A	530666		. . . WASHBASIN used on 090A		001
-110B	530647		. . . WASHBASIN used on 090B		001
120A	0333163		. . . . FLAP ASSY used on 110A, 110B		001
130A	0242976		. . . . . FLAP used on 120A		001
140A	0234912		. . . . . PIN used on 120A		002
150A	0083636		. . . . . SPLINT used on 120A		004

- ITEM NOT ILLUSTRATED

FIG. ITEM	PART NUMBER	AIRLINE STOCK NUMBER	NOMENCLATURE 1234567	EFF CODE	UNITS PER ASSY
160A	0234913		. . . . . SPRING used on 120A		004
170A	NAS1096-2-6		. . . . SCREW BUY PN NAS1801-08-6 used on 110A, 110B		004
180A	NAS1149CN832R		. . . . WASHER used on 110A, 110B		004
190A	NSA5067-08-1		. . . . NUT used on 110A, 110B		004

- ITEM NOT ILLUSTRATED

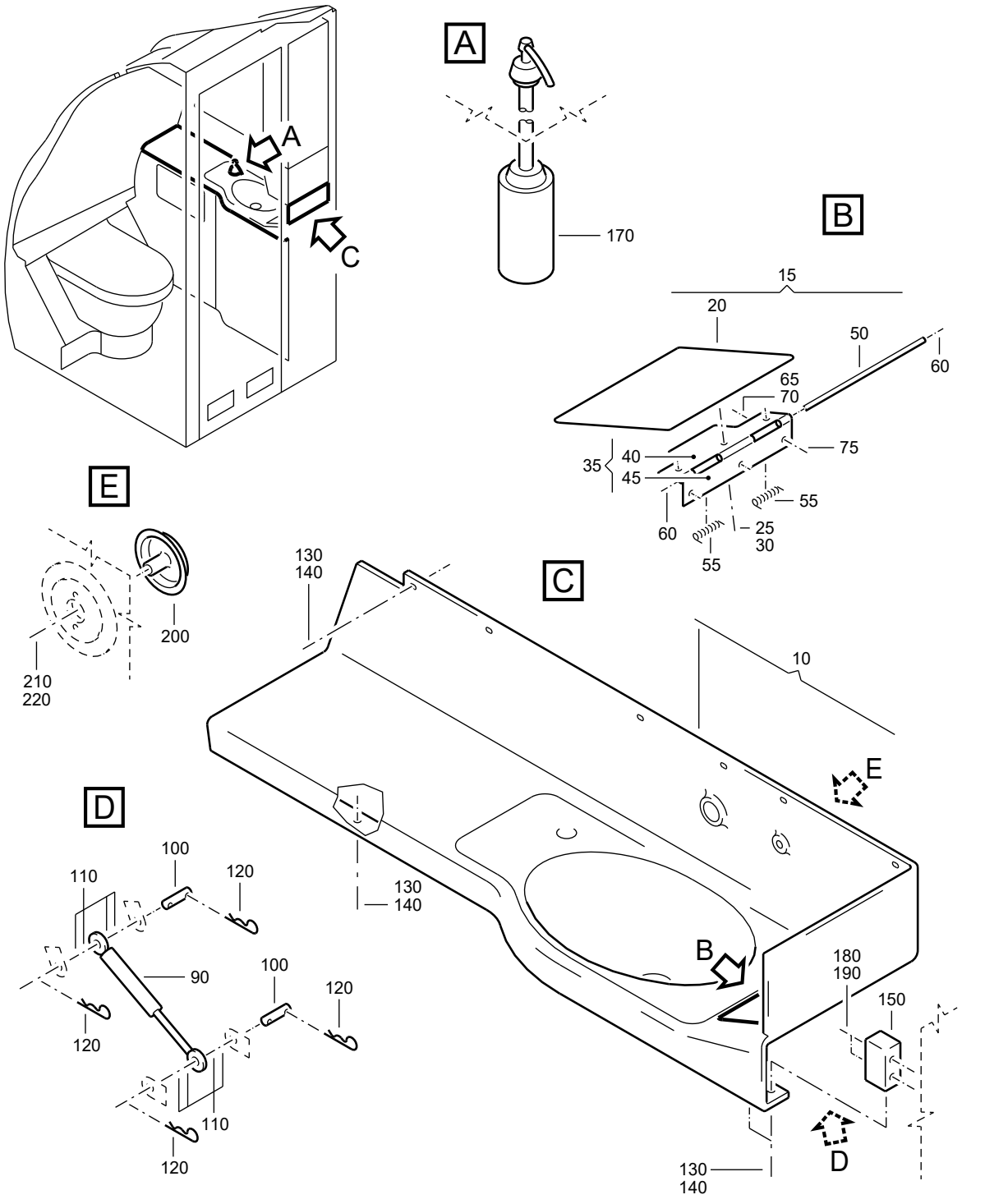

F_PL_254151_15_B_01_00

WASHBASIN UNIT
Figure 15B/EN254151SHEET15B01

FIG. ITEM	PART NUMBER	AIRLINE STOCK NUMBER	NOMENCLATURE 1234567	EFF CODE	UNITS PER ASSY
15B					
-001A	D2549020603674		. WASHBASIN UNIT NP used on 110B (25415101H) SEE 25-41-51-01H FOR NHA		RF
010A	A238101255-022		. . WASHBASIN ASSY POST SB 38-1055 used on 001A		001
015A	DCIN122-19-5		. . . FLAP ASSY-WASTE used on 010A		001
020A	DCIN123-19-5		. . . . FLAP used on 015A		001
025A	NAS1096-2-4		. . . . SCREW BUY PN NAS1801-08-4 used on 015A		003
030A	ASNA0113-48ADL		. . . . WASHER used on 015A		003
035A	DCIN112-08		. . . . HINGE ASSY used on 015A		001
040A	DCIN112-05		. . . . . HINGE HALF-FLAP used on 035A		001
045A	DCIN112-06		. . . . . HINGE HALF-WASHBASIN used on 035A		001
050A	DCIN112-04		. . . . . AXLE used on 035A		001
055A	DCIN112-01		. . . . . SPRING used on 035A		002
060A	DCIN112-07		. . . . . RING-RETAINING used on 035A		002

- ITEM NOT ILLUSTRATED

FIG. ITEM	PART NUMBER	AIRLINE STOCK NUMBER	NOMENCLATURE 1234567	EFF CODE	UNITS PER ASSY
065A	NAS1096-2-7		. . . SCREW BUY PN NAS1801-08-7 used on 010A		003
070A	ASNA0113-40ADL		. . . WASHER used on 010A		003
075A	ABS0365-08-1		. . . NUT-CLIP BUY PN ABS0365-08-1B used on 010A		003
090A	9855DV		. . . DAMPER used on 010A		001
100A	A338100311-200		. . . BOLT used on 010A		002
110A	A338100308-200		. . . WASHER used on 010A		008
120A	AN415-5		. . . PIN-LOCK BUY PN AA55487-5 used on 010A		004
130A	NAS1102-08-12		. . SCREW used on 001A		008
140A	0-123-000700000		. . WASHER used on 001A		008
150A	A225400420-008		. . BRACKET-WASHBASIN UNIT used on 001A		001
-160A	NSA5054-08		. . . INSERT used on 150A		002
170A	B822K40-10-11		. . DISPENSER-LIQUID SOAP used on 001A		001
180A	NAS1096-2-5		. . SCREW BUY PN NAS1801-08-5 used on 001A		002

- ITEM NOT ILLUSTRATED

FIG. ITEM	PART NUMBER	AIRLINE STOCK NUMBER	NOMENCLATURE 1234567	EFF CODE	UNITS PER ASSY
190A	NAS1149CN832R		. . WASHER used on 001A		002
200A	A338199005-200		. . CAP-COVER POST SB 38-1055 used on 001A		001
210A	NAS1102-08-6		. . SCREW POST SB 38-1055 used on 001A		001
220A	DAN125-4		. . WASHER POST SB 38-1055 used on 001A		001

- ITEM NOT ILLUSTRATED

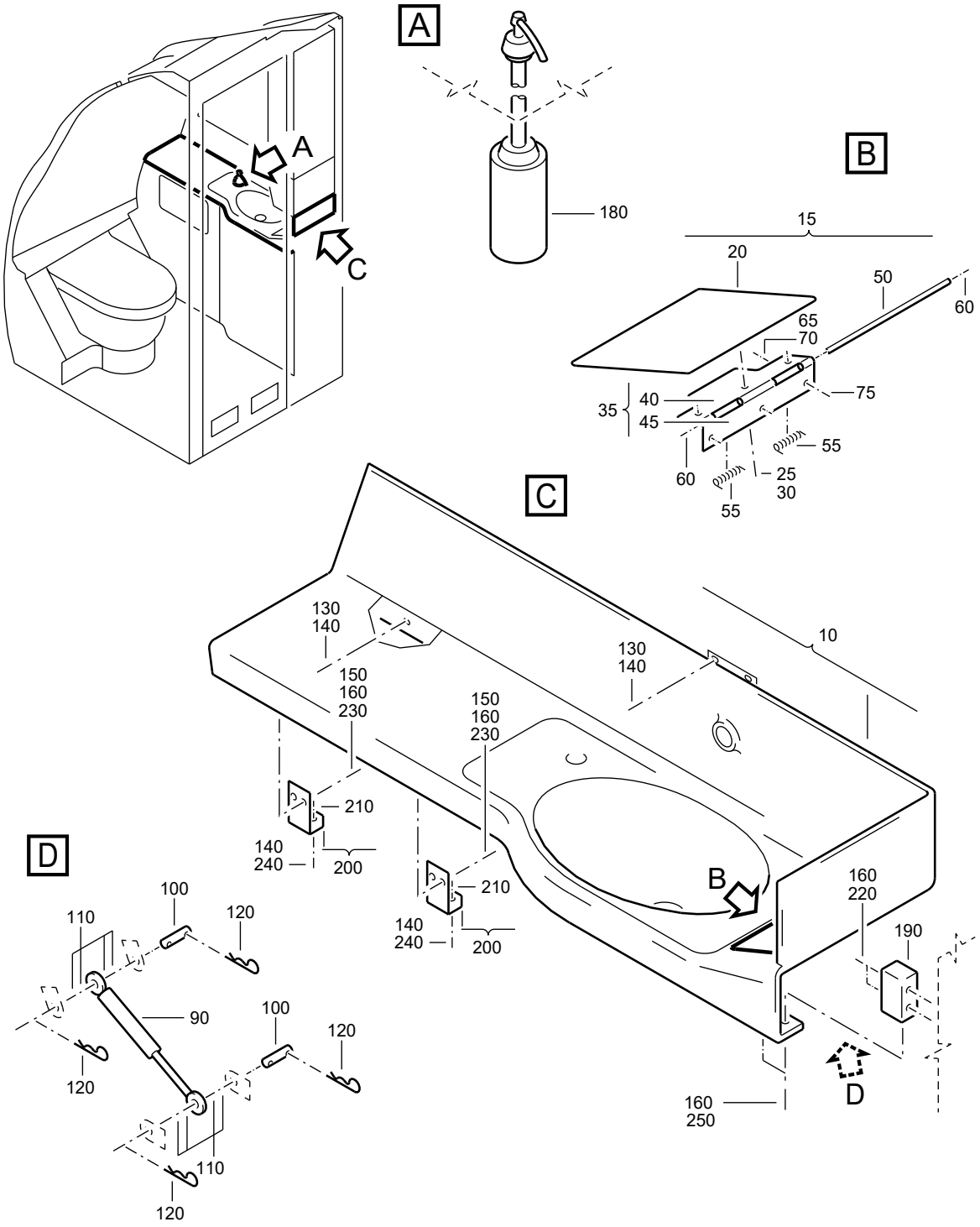

F_PL_254151_15_C_01_00

WASHBASIN UNIT
Figure 15C/EN254151SHEET15C01

FIG. ITEM	PART NUMBER	AIRLINE STOCK NUMBER	NOMENCLATURE 1234567		EFF CODE	UNITS PER ASSY
15C						
-001A	D2549030504874		. WASHBASIN UNIT used on 110A (25415101J), 110E (25415101L), 110B(25415101N), 110G (25415101T) SEE 25-41-51-01J FOR NHA SEE 25-41-51-01L FOR NHA SEE 25-41-51-01N FOR NHA SEE 25-41-51-01T FOR NHA	NP		RF
-001B	D2549010511074		. WASHBASIN UNIT used on 110B (25415101J), 110A (25415101K), 110A(25415101L), 110B (25415101M), 110A (25415101N), 110B(25415101P), 110A (25415141B) SEE 25-41-51-01J FOR NHA SEE 25-41-51-01K FOR NHA SEE 25-41-51-01L FOR NHA SEE 25-41-51-01M FOR NHA SEE 25-41-51-01N FOR NHA SEE 25-41-51-01P FOR NHA SEE 25-41-51-41B FOR NHA	NP		RF
-001C	D2549020611674		. WASHBASIN UNIT used on 110G (254151410) SEE 25-41-51-410 FOR NHA	NP		RF
-001D	D2549010510474		. WASHBASIN UNIT used on 110E (25415101J), 110E (25415141B) SEE 25-41-51-01J FOR NHA SEE 25-41-51-41B FOR NHA	NP		RF
-001E	D2549010511474		. WASHBASIN UNIT used on 110D (25415101K), 110B (25415101L), 110D(25415101M) SEE 25-41-51-01K FOR NHA SEE 25-41-51-01L FOR NHA SEE 25-41-51-01M FOR NHA	NP		RF

- ITEM NOT ILLUSTRATED

FIG. ITEM	PART NUMBER	AIRLINE STOCK NUMBER	NOMENCLATURE 1234567		EFF CODE	UNITS PER ASSY
-001F	D2549020604474		. WASHBASIN UNIT used on 110E (25415101K), 110F (25415101M) SEE 25-41-51-01K FOR NHA SEE 25-41-51-01M FOR NHA	NP		RF
-001G	D2549030506074		. WASHBASIN UNIT used on 110B (254151410), 110B (25415141A), 110C(25415141B), 110B (25415141J), 110J (25415141K), 110H(25415141N), 110D (25415141T), 110A (25415141U), 110D(25415141V), 110C (25415141Y) SEE 25-41-51-410 FOR NHA SEE 25-41-51-41A FOR NHA SEE 25-41-51-41B FOR NHA SEE 25-41-51-41J FOR NHA SEE 25-41-51-41K FOR NHA SEE 25-41-51-41N FOR NHA SEE 25-41-51-41T FOR NHA SEE 25-41-51-41U FOR NHA SEE 25-41-51-41V FOR NHA SEE 25-41-51-41Y FOR NHA	NP		RF
-001H	D2549010511874		. WASHBASIN UNIT used on 110C (25415101N) SEE 25-41-51-01N FOR NHA	NP		RF
-001J	D2549020605874		. WASHBASIN UNIT used on 110C (25415101L), 110C (25415141F), 110B(25415141H) SEE 25-41-51-01L FOR NHA SEE 25-41-51-41F FOR NHA SEE 25-41-51-41H FOR NHA	NP		RF

- ITEM NOT ILLUSTRATED

FIG. ITEM	PART NUMBER	AIRLINE STOCK NUMBER	NOMENCLATURE 1234567	EFF CODE	UNITS PER ASSY
-001K	D2549010603674		. WASHBASIN UNIT NP used on 110D (254151410), 110D (25415141A), 110F(25415141B), 110E (25415141G), 110B (25415141L), 110F(25415141P), 110B (25415141V), 110B (25415141Y) SEE 25-41-51-410 FOR NHA SEE 25-41-51-41A FOR NHA SEE 25-41-51-41B FOR NHA SEE 25-41-51-41G FOR NHA SEE 25-41-51-41L FOR NHA SEE 25-41-51-41P FOR NHA SEE 25-41-51-41V FOR NHA SEE 25-41-51-41Y FOR NHA		RF

- ITEM NOT ILLUSTRATED

FIG. ITEM	PART NUMBER	AIRLINE STOCK NUMBER	NOMENCLATURE 1234567	EFF CODE	UNITS PER ASSY
-001L	D2549020706274		. WASHBASIN UNIT NP PRE VSB A2-254-25-130 PRE VSB A2-254-25-039 used on 110F (25415141C), 110F (25415141F), 110A(25415141G), 110E (25415141H), 110A (25415141J), 110A(25415141K), 110A (25415141L), 110A (25415141M), 110E(25415141P), 110C (25415141R), 110D (25415141S), 110E(25415141T), 110B (25415141U), 110A (25415141V), 110E(25415141W), 110B (25415141X), 110A (25415141Y), 110D(25415141Z), 110D (25415142B) SEE 25-41-51-41C FOR NHA SEE 25-41-51-41F FOR NHA SEE 25-41-51-41G FOR NHA SEE 25-41-51-41H FOR NHA SEE 25-41-51-41J FOR NHA SEE 25-41-51-41K FOR NHA SEE 25-41-51-41L FOR NHA SEE 25-41-51-41M FOR NHA SEE 25-41-51-41P FOR NHA SEE 25-41-51-41R FOR NHA SEE 25-41-51-41S FOR NHA SEE 25-41-51-41T FOR NHA SEE 25-41-51-41U FOR NHA SEE 25-41-51-41V FOR NHA SEE 25-41-51-41W FOR NHA SEE 25-41-51-41X FOR NHA SEE 25-41-51-41Y FOR NHA SEE 25-41-51-41Z FOR NHA SEE 25-41-51-42B FOR NHA		RF
-001M	R22540162200074		. WASHBASIN UNIT NP POST VSB A2-254-25-039 used on 110F (25415141V) SEE 25-41-51-41V FOR NHA		RF

- ITEM NOT ILLUSTRATED

FIG. ITEM	PART NUMBER	AIRLINE STOCK NUMBER	NOMENCLATURE 1234567	EFF CODE	UNITS PER ASSY
-001N	R22540119605474		. WASHBASIN UNIT NP POST VSB A2-254-25-130 used on 110J (25415141W) SEE 25-41-51-41W FOR NHA		RF
010A	A238101255-002		. . WASHBASIN ASSY POST SB 25-1226 used on 001A, 001G, 001H		001
-010B	A238101255-006		. . WASHBASIN ASSY PRE VSB A2-254-25-130 POST SB 25-1226 used on 001B, 001L, 001M		001
-010C	A238101255-030		. . WASHBASIN ASSY POST SB 25-1226 used on 001C		001
-010D	A238101255-016		. . WASHBASIN ASSY POST SB 25-1226 used on 001D		001
-010E	A238101255-018		. . WASHBASIN ASSY POST SB 25-1226 used on 001E, 001K		001
-010F	A238101255-008		. . WASHBASIN ASSY POST SB 25-1226 used on 001F		001
-010G	A238101255-012		. . WASHBASIN ASSY POST SB 25-1226 used on 001J		001
-010H	A238101258-136		. . WASHBASIN ASSY POST VSB A2-254-25-130 used on 001N		001

- ITEM NOT ILLUSTRATED

FIG. ITEM	PART NUMBER	AIRLINE STOCK NUMBER	NOMENCLATURE 1234567	EFF CODE	UNITS PER ASSY
015A	DCIN122-19-4		. . . FLAP ASSY-WASTE PRE VSB A2-254-25-130 POST SB 25-1226 used on 010A, 010B, 010D, 010F		001
-015B	DCIN122-19-3A		. . . FLAP ASSY-WASTE POST SB 25-1226 used on 010C		001
-015C	DCIN122-19-3		. . . FLAP ASSY-WASTE POST SB 25-1226 used on 010E		001
-015D	DCIN122-19-5		. . . FLAP ASSY-WASTE POST SB 25-1226 used on 010G		001
-015E	DCIN122-9-18P		. . . FLAP ASSY-WASTE POST VSB A2-254-25-130 used on 010H		001
020A	DCIN123-19-4		. . . . FLAP used on 015A		001
-020B	DCIN123-19-3A		. . . . FLAP used on 015B		001
-020C	DCIN123-19-3		. . . . FLAP used on 015C		001
-020D	DCIN123-19-5		. . . . FLAP used on 015D		001
025A	NAS1096-2-4		. . . . SCREW BUY PN NAS1801-08-4 used on 015A, 015B, 015C, 015D		003
030A	ASNA0113-48ADL		. . . . WASHER used on 015A, 015B, 015C, 015D		003

- ITEM NOT ILLUSTRATED

FIG. ITEM	PART NUMBER	AIRLINE STOCK NUMBER	NOMENCLATURE 1234567	EFF CODE	UNITS PER ASSY
035A	DCIN112-08		. . . . HINGE ASSY used on 015A, 015B, 015C, 015D		001
040A	DCIN112-05		. . . . . HINGE HALF-FLAP used on 035A		001
045A	DCIN112-06		. . . . . HINGE HALF-WASHBASIN used on 035A		001
050A	DCIN112-04		. . . . . AXLE used on 035A		001
055A	DCIN112-01		. . . . . SPRING used on 035A		002
060A	DCIN112-07		. . . . . RING-RETAINING used on 035A		002
065A	NAS1096-2-7		. . . SCREW BUY PN NAS1801-08-7 PRE VSB A2-254-25-130 used on 010A, 010B, 010C, 010D, 010E, 010F, 010G		003
-065B	NAS1801-08-7		. . . SCREW POST VSB A2-254-25-130 used on 010H		003
070A	ASNA0113-40ADL		. . . WASHER used on 010A, 010B, 010C, 010D, 010E, 010F, 010G, 010H		003
075A	ABS0365-08-1		. . . NUT-CLIP BUY PN ABS0365-08-1B used on 010A, 010B, 010C, 010D, 010E, 010F, 010G, 010H		003
090A	9855DV		. . . DAMPER used on 010A, 010B, 010C, 010D, 010E, 010F, 010G, 010H		001

- ITEM NOT ILLUSTRATED

FIG. ITEM	PART NUMBER	AIRLINE STOCK NUMBER	NOMENCLATURE 1234567	EFF CODE	UNITS PER ASSY
100A	A338100311-200		. . . BOLT used on 010A, 010B, 010C, 010D, 010E, 010F, 010G, 010H		002
110A	A338100308-200		. . . WASHER used on 010A, 010B, 010C, 010D, 010E, 010F, 010G, 010H		008
120A	AN415-5		. . . PIN-LOCK BUY PN AA55487-5 used on 010A, 010B, 010C, 010D, 010E, 010F, 010G, 010H		004
130A	NAS1096-2-6		. . SCREW PRE VSB A2-254-25-130 USE AS REQUIRED USAGE RANGE FROM 5 TO 9 BUY PN NAS1801-08-6 used on 001A, 001B, 001C, 001D, 001E, 001F, 001G, 001H, 001J, 001K, 001L, 001M		AR
-130B	NAS1801-08-5		. . SCREW POST VSB A2-254-25-130 used on 001N		008
140A	ASNA0113-40ADL		. . WASHER USE AS REQUIRED USAGE RANGE FROM 7 TO 11 used on 001A, 001B, 001C, 001D, 001E, 001F, 001G, 001H, 001J, 001K, 001L, 001M, 001N		AR
150A	NAS1096-2-7		. . SCREW BUY PN NAS1801-08-7 used on 001A, 001B, 001C, 001D, 001E, 001F, 001G, 001H, 001J, 001K, 001L, 001M, 001N		004

- ITEM NOT ILLUSTRATED

FIG. ITEM	PART NUMBER	AIRLINE STOCK NUMBER	NOMENCLATURE 1234567	EFF CODE	UNITS PER ASSY
160A	NAS1149CN832R		. . WASHER PRE VSB A2-254-25-130 used on 001A, 001B, 001C, 001D, 001E, 001F, 001G, 001H, 001J, 001K, 001L, 001M		008
-160B	NAS1149CN832R		. . WASHER POST VSB A2-254-25-130 used on 001N		005
-165A	ASNA0113-40ADL		. . WASHER POST VSB A2-254-25-130 used on 001N		002
180A	C922-35-10-00		. . DISPENSER ASSY-LIQUID SOAP BUY PN B822-40-10 used on 001A, 001B, 001C, 001D, 001E, 001F		001
-180B	B822-40-10		. . DISPENSER-LIQUID SOAP PRE VSB A2-254-25-039 used on 001G, 001K, 001L, 001N		001
-180C	B822K40-10-11		. . DISPENSER-LIQUID SOAP used on 001J		001
-180D	C922-35-10-11		. . DISPENSER ASSY-LIQUID SOAP BUY PN B822-40-10-11 used on 001H		001
-180E	TRBR10WE		. . DISPENSER-LIQUID SOAP POST VSB A2-254-25-039 used on 001M		001
-182A	TRBASE125		. . BRACKET POST VSB A2-254-25-039 used on 001M		001

- ITEM NOT ILLUSTRATED

FIG. ITEM	PART NUMBER	AIRLINE STOCK NUMBER	NOMENCLATURE 1234567	EFF CODE	UNITS PER ASSY
-184A	A338100212-200		. . WASHER used on 001M		001
190A	A225400420-008		. . BRACKET-WASHBASIN UNIT used on 001A, 001B, 001C, 001D, 001E, 001F, 001G, 001H, 001J, 001K, 001L, 001M, 001N		001
-195A	NSA5054-08		. . . INSERT used on 190A		002
200A	A225400420-010		. . ANGLE used on 001A, 001B, 001C, 001D, 001E, 001F, 001G, 001H, 001J, 001K, 001L, 001M, 001N		002
210A	NAS1068A08		. . . NUT BUY PN MS21075L08 used on 200A		002
220A	NAS1096-2-5		. . SCREW PRE VSB A2-254-25-130 BUY PN NAS1801-08-5 used on 001A, 001B, 001C, 001D, 001E, 001F, 001G, 001H, 001J, 001K, 001L, 001M		002
-220B	NAS1801-08-24		. . SCREW POST VSB A2-254-25-130 used on 001N		002
230A	NSA5067-08-1		. . NUT used on 001A, 001B, 001C, 001D, 001E, 001F, 001G, 001H, 001J, 001K, 001L, 001M, 001N		004

- ITEM NOT ILLUSTRATED

FIG. ITEM	PART NUMBER	AIRLINE STOCK NUMBER	NOMENCLATURE 1234567	EFF CODE	UNITS PER ASSY
240A	NAS1096-2-12		. . SCREW PRE VSB A2-254-25-130 BUY PN NAS1801-08-12 used on 001A, 001B, 001C, 001D, 001E, 001F, 001G, 001H, 001J, 001K, 001L, 001M		002
-240B	NAS1801-08-10		. . SCREW POST VSB A2-254-25-130 used on 001N		002
250A	NAS1100-3-4		. . SCREW PRE VSB A2-254-25-130 used on 001A, 001B, 001C, 001D, 001E, 001F, 001G, 001H, 001J, 001K, 001L, 001M		002
-250B	NAS1801-08-5		. . SCREW POST VSB A2-254-25-130 used on 001N		001

- ITEM NOT ILLUSTRATED

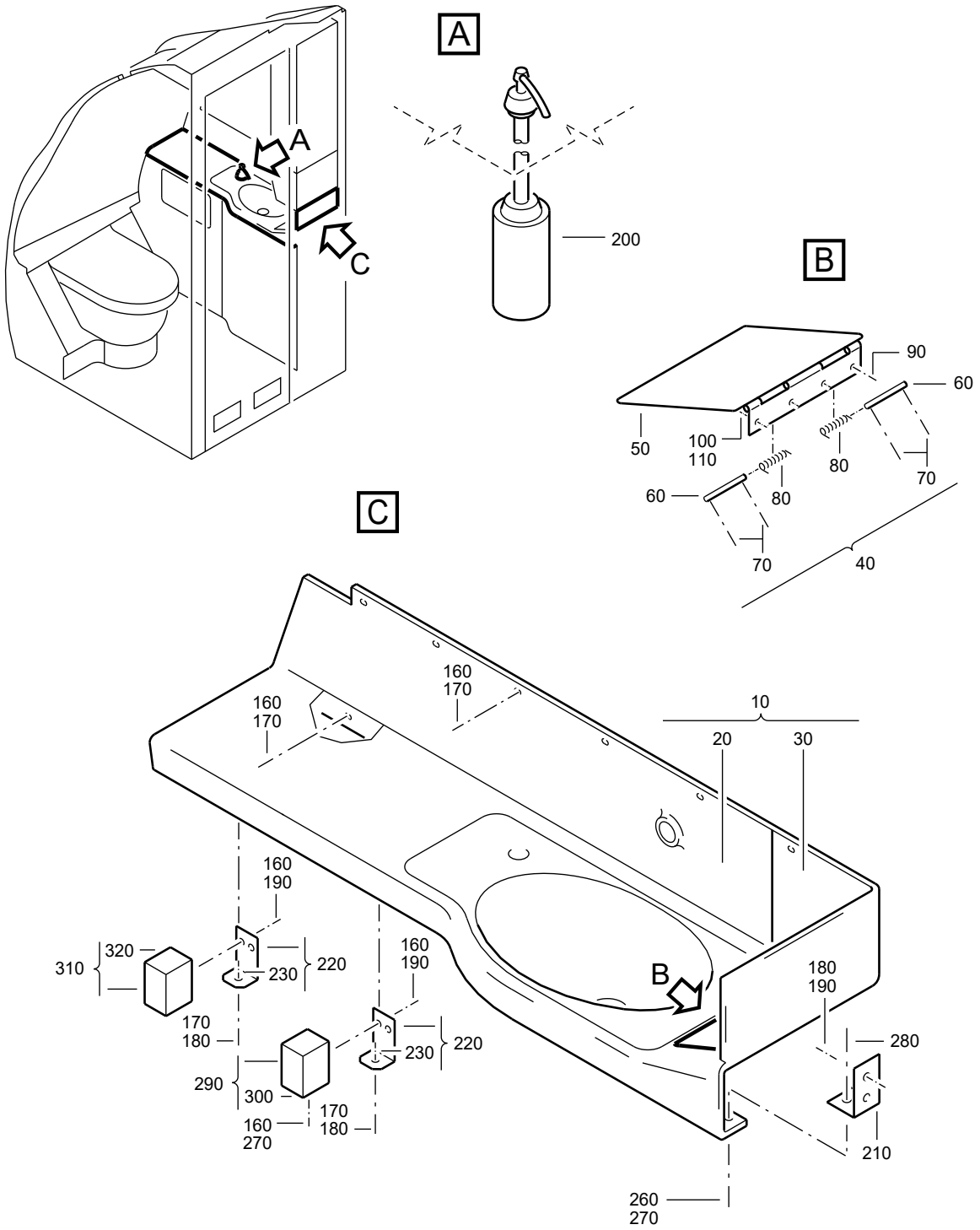

F_PL_254151_15_D_01_00

WASHBASIN UNIT
Figure 15D/EN254151SHEET15D01

FIG. ITEM	PART NUMBER	AIRLINE STOCK NUMBER	NOMENCLATURE 1234567		EFF CODE	UNITS PER ASSY
15D						
-001A	D2549030504674		. WASHBASIN UNIT used on 110B (25415101K) SEE 25-41-51-01K FOR NHA	NP		RF
-001B	D2549010509874		. WASHBASIN UNIT used on 110A (25415101M), 110A (25415101R), 110D(25415141B) SEE 25-41-51-01M FOR NHA SEE 25-41-51-01R FOR NHA SEE 25-41-51-41B FOR NHA	NP		RF
-001C	D2549010600074		. WASHBASIN UNIT used on 110H (25415101Q), 110A (25415101T), 110A(25415101U), 110H (25415101W) SEE 25-41-51-01Q FOR NHA SEE 25-41-51-01T FOR NHA SEE 25-41-51-01U FOR NHA SEE 25-41-51-01W FOR NHA	NP		RF

- ITEM NOT ILLUSTRATED

FIG. ITEM	PART NUMBER	AIRLINE STOCK NUMBER	NOMENCLATURE 1234567	EFF CODE	UNITS PER ASSY
-001D	D2549020706674		. WASHBASIN UNIT NP used on 110B (25415141D), 110C (25415141K), 110C(25415141M), 110E (25415141Z), 110A (25415142A), 110E(25415142B), 110A (25415142C), 110B (25415142F), 110E(25415142G), 110C (25415142H), 110F (25415142M), 110A(25415142N) SEE 25-41-51-41D FOR NHA SEE 25-41-51-41K FOR NHA SEE 25-41-51-41M FOR NHA SEE 25-41-51-41Z FOR NHA SEE 25-41-51-42A FOR NHA SEE 25-41-51-42B FOR NHA SEE 25-41-51-42C FOR NHA SEE 25-41-51-42F FOR NHA SEE 25-41-51-42G FOR NHA SEE 25-41-51-42H FOR NHA SEE 25-41-51-42M FOR NHA SEE 25-41-51-42N FOR NHA		RF
-001E	D2549030408274		. WASHBASIN UNIT NP used on 110E (25415142D), 110D (25415142L) SEE 25-41-51-42D FOR NHA SEE 25-41-51-42L FOR NHA		RF
-001F	D2549030413474		. WASHBASIN UNIT NP used on 110F (25415142N) SEE 25-41-51-42N FOR NHA		RF
010A	537146		. . WASHBASIN ASSY used on 001A, 001B, 001C, 001D		001
-010B	537148		. . WASHBASIN ASSY used on 001E		001
-010C	A238101204-000		. . WASHBASIN ASSY used on 001F		001

- ITEM NOT ILLUSTRATED

FIG. ITEM	PART NUMBER	AIRLINE STOCK NUMBER	NOMENCLATURE 1234567	EFF CODE	UNITS PER ASSY
020A	537163		. . . COVER-REAR used on 010A, 010B		001
-020B	537008		. . . COVER-REAR used on 010C		001
030A	537165		. . . WASHBASIN used on 010A		001
-030B	537167		. . . WASHBASIN used on 010B, 010C		001
040A	0333163		. . . . FLAP ASSY used on 030A, 030B		001
050A	0242976		. . . . . FLAP used on 040A		001
060A	0234912		. . . . . PIN used on 040A		002
070A	0083636		. . . . . SPLINT used on 040A		004
080A	0234913		. . . . . SPRING used on 040A		004
090A	NAS1096-2-6		. . . . SCREW BUY PN NAS1801-08-6 used on 030A, 030B		004
100A	NAS1149CN832R		. . . . WASHER used on 030A, 030B		004
110A	NSA5067-08-1		. . . . NUT used on 030A, 030B		004
160A	NAS1096-2-6		. . SCREW BUY PN NAS1801-08-6 used on 001A, 001B, 001C, 001D, 001E, 001F		014

- ITEM NOT ILLUSTRATED

FIG. ITEM	PART NUMBER	AIRLINE STOCK NUMBER	NOMENCLATURE 1234567	EFF CODE	UNITS PER ASSY
170A	ASNA0113-40ADL		. . WASHER used on 001A, 001B, 001C, 001D, 001E, 001F		011
180A	NAS1096-2-7		. . SCREW BUY PN NAS1801-08-7 used on 001A, 001B, 001C, 001D, 001E, 001F		006
190A	NAS1149CN832R		. . WASHER used on 001A, 001B, 001C, 001D, 001E, 001F		006
200A	B822K40-10-11		. . DISPENSER-LIQUID SOAP used on 001A		001
-200B	C922-35-10-00		. . DISPENSER ASSY-LIQUID SOAP BUY PN B822-40-10 used on 001B		001
-200C	C922-45-10-00		. . DISPENSER ASSY-LIQUID SOAP BUY PN B822-40-10 used on 001C		001
-200D	B822-40-10		. . DISPENSER-LIQUID SOAP used on 001D, 001E, 001F		001
210A	A238100306-202		. . BRACKET-WASHBASIN used on 001A, 001B, 001C, 001D, 001E, 001F		001
220A	A225400420-010		. . ANGLE used on 001A, 001B, 001C, 001D, 001E, 001F		002
230A	NAS1068A08		. . . NUT BUY PN MS21075L08 used on 220A		002

- ITEM NOT ILLUSTRATED

FIG. ITEM	PART NUMBER	AIRLINE STOCK NUMBER	NOMENCLATURE 1234567	EFF CODE	UNITS PER ASSY
260A	NAS1096-2-8		. . SCREW BUY PN NAS1801-08-8 used on 001A, 001B, 001C, 001D, 001E, 001F		001
270A	NAS1149C0363R		. . WASHER used on 001A, 001B, 001C, 001D, 001E, 001F		002
280A	NSA5067-08-1		. . NUT used on 001A, 001B, 001C, 001D, 001E, 001F		001
290A	A225400420-012		. . BRACKET used on 001A, 001B, 001C, 001D, 001E, 001F		001
300A	NSA5345-08C		. . . INSERT used on 290A		003
310A	A225400420-014		. . BRACKET used on 001A, 001B, 001C, 001D, 001E, 001F		001
320A	NSA5345-08C		. . . INSERT used on 310A		002

- ITEM NOT ILLUSTRATED

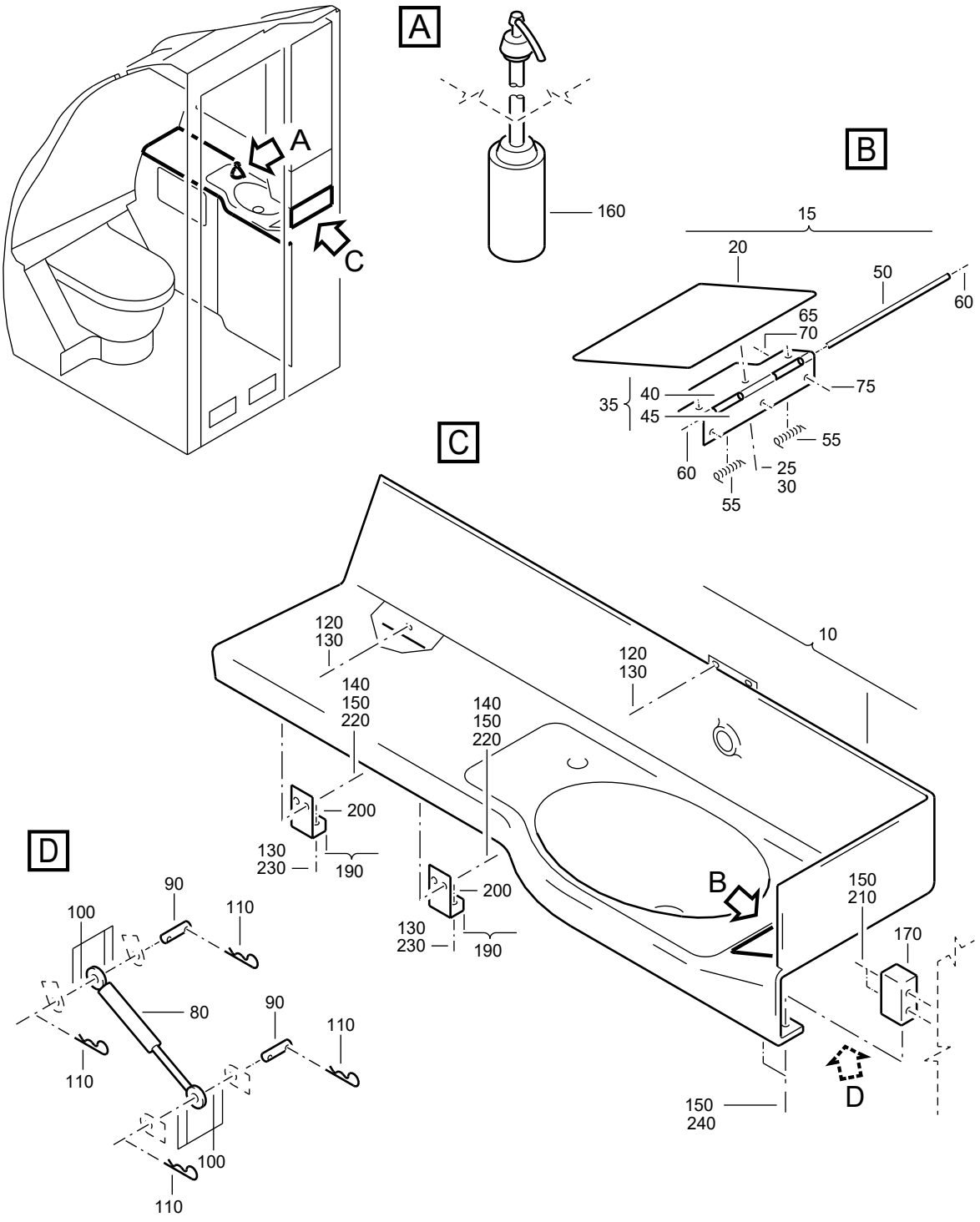

F_PL_254151_15_E_01_00

WASHBASIN UNIT
Figure 15E/EN254151SHEET15E01

FIG. ITEM	PART NUMBER	AIRLINE STOCK NUMBER	NOMENCLATURE 1234567	EFF CODE	UNITS PER ASSY
15E					
-001A	D2549030507274		. WASHBASIN UNIT NP used on 110E (25415101N) SEE 25-41-51-01N FOR NHA		RF
-001B	D2549010513074		. WASHBASIN UNIT NP used on 110C (25415101M), 110D (25415101N) SEE 25-41-51-01M FOR NHA SEE 25-41-51-01N FOR NHA		RF
010A	A238101255-028		. . WASHBASIN ASSY POST SB 25-1226 used on 001A		001
-010B	A238101255-006		. . WASHBASIN ASSY POST SB 25-1226 used on 001B		001
015A	DCIN122-19-4		. . . FLAP ASSY-WASTE POST SB 25-1226 used on 010A, 010B		001
020A	DCIN123-19-4		. . . . FLAP used on 015A		001
025A	NAS1096-2-4		. . . . SCREW BUY PN NAS1801-08-4 used on 015A		003
030A	ASNA0113-48ADL		. . . . WASHER used on 015A		003
035A	DCIN112-08		. . . . HINGE ASSY used on 015A		001
040A	DCIN112-05		. . . . . HINGE HALF-FLAP used on 035A		001
045A	DCIN112-06		. . . . . HINGE HALF-WASHBASIN used on 035A		001

- ITEM NOT ILLUSTRATED

FIG. ITEM	PART NUMBER	AIRLINE STOCK NUMBER	NOMENCLATURE 1234567	EFF CODE	UNITS PER ASSY
050A	DCIN112-04		. . . . . AXLE used on 035A		001
055A	DCIN112-01		. . . . . SPRING used on 035A		002
060A	DCIN112-07		. . . . . RING-RETAINING used on 035A		002
065A	NAS1096-2-7		. . . SCREW BUY PN NAS1801-08-7 used on 010A, 010B		003
070A	ASNA0113-40ADL		. . . WASHER used on 010A, 010B		003
075A	ABS0365-08-1		. . . NUT-CLIP BUY PN ABS0365-08-1B used on 010A, 010B		003
080A	9855DV		. . . DAMPER used on 010A, 010B		001
090A	A338100311-200		. . . BOLT used on 010A, 010B		002
100A	A338100308-200		. . . WASHER used on 010A, 010B		008
110A	AN415-5		. . . PIN-LOCK BUY PN AA55487-5 used on 010A, 010B		004
120A	NAS1096-2-6		. . SCREW BUY PN NAS1801-08-6 used on 001A, 001B		005
130A	ASNA0113-40ADL		. . WASHER used on 001A, 001B		007

- ITEM NOT ILLUSTRATED

FIG. ITEM	PART NUMBER	AIRLINE STOCK NUMBER	NOMENCLATURE 1234567	EFF CODE	UNITS PER ASSY
140A	NAS1096-2-7		. . SCREW BUY PN NAS1801-08-7 used on 001A, 001B		004
150A	NAS1149CN832R		. . WASHER used on 001A, 001B		008
160A	C922-35-10-00		. . DISPENSER ASSY-LIQUID SOAP BUY PN B822-40-10 used on 001A		001
-160B	C922-35-10-13		. . DISPENSER ASSY-LIQUID SOAP BUY PN B822-40-10-13 used on 001B		001
170A	A225400420-008		. . BRACKET-WASHBASIN UNIT used on 001A, 001B		001
-180A	NSA5054-08		. . . INSERT used on 170A		002
190A	A225400420-010		. . ANGLE used on 001A, 001B		002
200A	NAS1068A08		. . . NUT BUY PN MS21075L08 used on 190A		002
210A	NAS1096-2-5		. . SCREW BUY PN NAS1801-08-5 used on 001A, 001B		002
220A	NSA5067-08-1		. . NUT used on 001A, 001B		004
230A	NAS1096-2-12		. . SCREW BUY PN NAS1801-08-12 used on 001A, 001B		002

- ITEM NOT ILLUSTRATED

FIG. ITEM	PART NUMBER	AIRLINE STOCK NUMBER	NOMENCLATURE 1234567	EFF CODE	UNITS PER ASSY
240A	NAS1100-3-4		. . SCREW used on 001A, 001B		002

- ITEM NOT ILLUSTRATED

THIS PAGE IS INTENTIONALLY LEFT BLANK

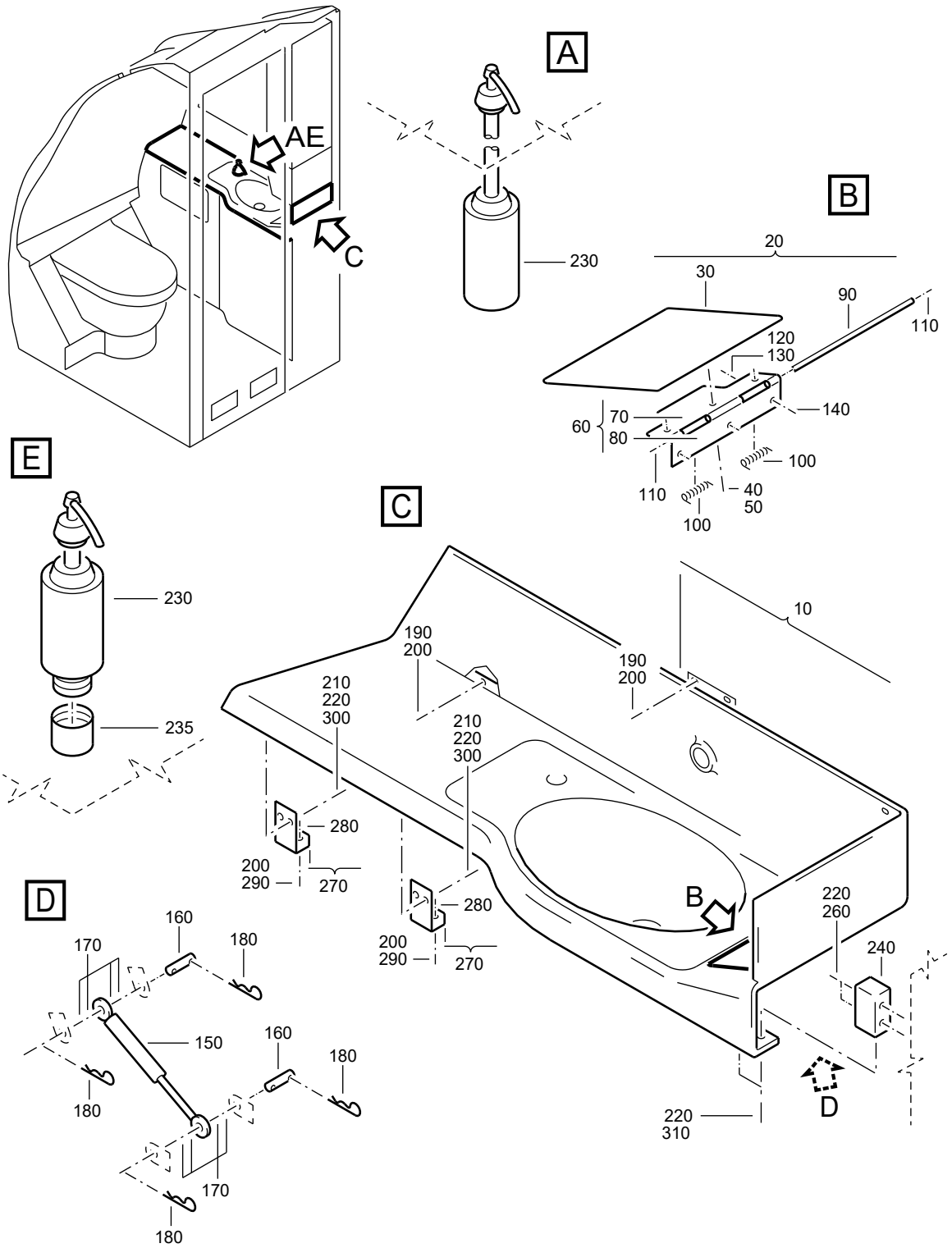

F_PL_254151_15_F_01_00

WASHBASIN UNIT
Figure 15F/EN254151SHEET15F01

FIG. ITEM	PART NUMBER	AIRLINE STOCK NUMBER	NOMENCLATURE 1234567	EFF CODE	UNITS PER ASSY
15F					
-001A	D2549010514074		. WASHBASIN UNIT NP used on 110D (25415101P), 110A (25415101S), 110J(25415101T), 110A (25415101V), 110A (25415101W), 110E(25415101X) SEE 25-41-51-01P FOR NHA SEE 25-41-51-01S FOR NHA SEE 25-41-51-01T FOR NHA SEE 25-41-51-01V FOR NHA SEE 25-41-51-01W FOR NHA SEE 25-41-51-01X FOR NHA		RF
-001B	D2549010510674		. WASHBASIN UNIT NP used on 110D (25415101L), 110E (25415101P), 110C(25415101Q), 110B (25415101R), 110E (25415101S), 110B(25415101T), 110B (25415101U), 110B (25415101V), 110E(25415101W), 110A (25415101X) SEE 25-41-51-01L FOR NHA SEE 25-41-51-01P FOR NHA SEE 25-41-51-01Q FOR NHA SEE 25-41-51-01R FOR NHA SEE 25-41-51-01S FOR NHA SEE 25-41-51-01T FOR NHA SEE 25-41-51-01U FOR NHA SEE 25-41-51-01V FOR NHA SEE 25-41-51-01W FOR NHA SEE 25-41-51-01X FOR NHA		RF

- ITEM NOT ILLUSTRATED

FIG. ITEM	PART NUMBER	AIRLINE STOCK NUMBER	NOMENCLATURE 1234567	EFF CODE	UNITS PER ASSY
-001C	D2549030509474		. WASHBASIN UNIT NP used on 110D (25415101J), 110A (25415101P), 110D(25415101Q), 110F (25415101T), 110J (25415101V), 110F(25415101W) SEE 25-41-51-01J FOR NHA SEE 25-41-51-01P FOR NHA SEE 25-41-51-01Q FOR NHA SEE 25-41-51-01T FOR NHA SEE 25-41-51-01V FOR NHA SEE 25-41-51-01W FOR NHA		RF
-001D	D2549020613674		. WASHBASIN UNIT NP used on 110C (25415101K), 110E (25415101M), 110B(25415101Q), 110C (25415101T), 110F (25415101V), 110H(25415141B), 110G (25415141D), 110G (25415141G), 110G(25415141K), 110G (25415141M), 110C (25415141N), 110C(25415141T), 110D (25415141W), 110E (25415141X), 110A(254151420) SEE 25-41-51-01K FOR NHA SEE 25-41-51-01M FOR NHA SEE 25-41-51-01Q FOR NHA SEE 25-41-51-01T FOR NHA SEE 25-41-51-01V FOR NHA SEE 25-41-51-41B FOR NHA SEE 25-41-51-41D FOR NHA SEE 25-41-51-41G FOR NHA SEE 25-41-51-41K FOR NHA SEE 25-41-51-41M FOR NHA SEE 25-41-51-41N FOR NHA SEE 25-41-51-41T FOR NHA SEE 25-41-51-41W FOR NHA SEE 25-41-51-41X FOR NHA SEE 25-41-51-420 FOR NHA		RF

- ITEM NOT ILLUSTRATED

FIG. ITEM	PART NUMBER	AIRLINE STOCK NUMBER	NOMENCLATURE 1234567		EFF CODE	UNITS PER ASSY
-001E	D2549030508674		. WASHBASIN UNIT used on 110E (25415101Q), 110G (25415101U), 110C (25415101X) SEE 25-41-51-01Q FOR NHA SEE 25-41-51-01U FOR NHA SEE 25-41-51-01X FOR NHA	NP		RF
-001F	D2549020614674		. WASHBASIN UNIT used on 110F (25415101Q) SEE 25-41-51-01Q FOR NHA	NP		RF
-001G	D2549010514474		. WASHBASIN UNIT used on 110G (25415101Q), 110B (25415101X) SEE 25-41-51-01Q FOR NHA SEE 25-41-51-01X FOR NHA	NP		RF

- ITEM NOT ILLUSTRATED

FIG. ITEM	PART NUMBER	AIRLINE STOCK NUMBER	NOMENCLATURE 1234567		EFF CODE	UNITS PER ASSY
-001H	D2549020614474		. WASHBASIN UNIT used on 110F (25415101J), 110C (25415101P), 110B(25415101S), 110H (25415101T), 110E (25415101V), 110G(25415101W), 110C (25415101Z), 110K (25415141B), 110C(25415141C), 110D (25415141G), 110D (25415141H), 110E(25415141M), 110E (25415141N), 110H (25415141X), 110C(25415142E) SEE 25-41-51-01J FOR NHA SEE 25-41-51-01P FOR NHA SEE 25-41-51-01S FOR NHA SEE 25-41-51-01T FOR NHA SEE 25-41-51-01V FOR NHA SEE 25-41-51-01W FOR NHA SEE 25-41-51-01Z FOR NHA SEE 25-41-51-41B FOR NHA SEE 25-41-51-41C FOR NHA SEE 25-41-51-41G FOR NHA SEE 25-41-51-41H FOR NHA SEE 25-41-51-41M FOR NHA SEE 25-41-51-41N FOR NHA SEE 25-41-51-41X FOR NHA SEE 25-41-51-42E FOR NHA	NP		RF
-001J	D2549020612674		. WASHBASIN UNIT used on 110C (25415101S), 110F (25415101U), 110C(25415101W) SEE 25-41-51-01S FOR NHA SEE 25-41-51-01U FOR NHA SEE 25-41-51-01W FOR NHA	NP		RF
-001K	D2549020613074		. WASHBASIN UNIT used on 110D (25415101S) SEE 25-41-51-01S FOR NHA	NP		RF

- ITEM NOT ILLUSTRATED

FIG. ITEM	PART NUMBER	AIRLINE STOCK NUMBER	NOMENCLATURE 1234567	EFF CODE	UNITS PER ASSY
-001L	D2549010601274		. WASHBASIN UNIT NP used on 110D (25415101T), 110C (25415101U), 110F(25415101X) SEE 25-41-51-01T FOR NHA SEE 25-41-51-01U FOR NHA SEE 25-41-51-01X FOR NHA		RF
-001M	D2549010603274		. WASHBASIN UNIT NP used on 110C (254151410), 110F (25415141A), 110C(25415141H), 110B (25415141M), 110B (25415141N), 110G(25415141P), 110A (25415141W), 110G (254151420), 110B(25415142A), 110B (25415142E), 110H (25415142G), 110D(25415142J), 110F (25415142K) SEE 25-41-51-410 FOR NHA SEE 25-41-51-41A FOR NHA SEE 25-41-51-41H FOR NHA SEE 25-41-51-41M FOR NHA SEE 25-41-51-41N FOR NHA SEE 25-41-51-41P FOR NHA SEE 25-41-51-41W FOR NHA SEE 25-41-51-420 FOR NHA SEE 25-41-51-42A FOR NHA SEE 25-41-51-42E FOR NHA SEE 25-41-51-42G FOR NHA SEE 25-41-51-42J FOR NHA SEE 25-41-51-42K FOR NHA		RF

- ITEM NOT ILLUSTRATED

FIG. ITEM	PART NUMBER	AIRLINE STOCK NUMBER	NOMENCLATURE 1234567	EFF CODE	UNITS PER ASSY
-001N	D2549030513874		. WASHBASIN UNIT NP used on 110B (25415101Y), 110G (25415141B), 110H(25415141D), 110F (25415141G), 110F (25415141H), 110F(25415141M), 110D (25415141N), 110F (25415141W), 110F(25415141X) SEE 25-41-51-01Y FOR NHA SEE 25-41-51-41B FOR NHA SEE 25-41-51-41D FOR NHA SEE 25-41-51-41G FOR NHA SEE 25-41-51-41H FOR NHA SEE 25-41-51-41M FOR NHA SEE 25-41-51-41N FOR NHA SEE 25-41-51-41W FOR NHA SEE 25-41-51-41X FOR NHA		RF
010A	A238101255-002		. . WASHBASIN ASSY used on 001A		001
-010B	A238101255-006		. . WASHBASIN ASSY used on 001B		001
-010C	A238101255-020		. . WASHBASIN ASSY POST SB 25-1226 used on 001D		001
-010D	A238101255-010		. . WASHBASIN ASSY POST SB 25-1226 used on 001C, 001N		001
-010E	A238101255-028		. . WASHBASIN ASSY used on 001E		001
-010F	A238101255-008		. . WASHBASIN ASSY used on 001F		001
-010G	A238101255-000		. . WASHBASIN ASSY used on 001G		001

- ITEM NOT ILLUSTRATED

FIG. ITEM	PART NUMBER	AIRLINE STOCK NUMBER	NOMENCLATURE 1234567	EFF CODE	UNITS PER ASSY
-010H	A238101255-024		. . WASHBASIN ASSY POST SB 25-1226 used on 001H		001
-010J	A238101255-018		. . WASHBASIN ASSY used on 001J		001
-010K	A238101255-030		. . WASHBASIN ASSY used on 001K		001
-010L	A238101255-016		. . WASHBASIN ASSY used on 001L, 001M		001
020A	DCIN122-19-4		. . . FLAP ASSY-WASTE POST SB 25-1226 used on 010A, 010B, 010D, 010E, 010F, 010H, 010L		001
-020B	DCIN122-19-3		. . . FLAP ASSY-WASTE POST SB 25-1226 used on 010C, 010G, 010J		001
-020C	DCIN122-19-3A		. . . FLAP ASSY-WASTE used on 010K		001
030A	DCIN123-19-4		. . . . FLAP used on 020A		001
-030B	DCIN123-19-3		. . . . FLAP used on 020B		001
-030C	DCIN123-19-3A		. . . . FLAP used on 020C		001
040A	NAS1096-2-4		. . . . SCREW BUY PN NAS1801-08-4 used on 020A, 020B, 020C		003
050A	ASNA0113-48ADL		. . . . WASHER used on 020A, 020B, 020C		003

- ITEM NOT ILLUSTRATED

FIG. ITEM	PART NUMBER	AIRLINE STOCK NUMBER	NOMENCLATURE 1234567	EFF CODE	UNITS PER ASSY
060A	DCIN112-08		. . . . HINGE ASSY used on 020A, 020B, 020C		001
070A	DCIN112-05		. . . . . HINGE HALF-FLAP used on 060A		001
080A	DCIN112-06		. . . . . HINGE HALF-WASHBASIN used on 060A		001
090A	DCIN112-04		. . . . . AXLE used on 060A		001
100A	DCIN112-01		. . . . . SPRING used on 060A		002
110A	DCIN112-07		. . . . . RING-RETAINING used on 060A		002
120A	NAS1096-2-7		. . . SCREW BUY PN NAS1801-08-7 used on 010A, 010B, 010C, 010D, 010E, 010F, 010G, 010H, 010J, 010K, 010L		003
130A	ASNA0113-40ADL		. . . WASHER used on 010A, 010B, 010C, 010D, 010E, 010F, 010G, 010H, 010J, 010K, 010L		003
140A	ABS0365-08-1		. . . NUT-CLIP BUY PN ABS0365-08-1B used on 010A, 010B, 010C, 010D, 010E, 010F, 010G, 010H, 010J, 010K, 010L		003
150A	9855DV		. . . DAMPER used on 010A, 010B, 010C, 010D, 010E, 010F, 010G, 010H, 010J, 010K, 010L		001

- ITEM NOT ILLUSTRATED

FIG. ITEM	PART NUMBER	AIRLINE STOCK NUMBER	NOMENCLATURE 1234567	EFF CODE	UNITS PER ASSY
160A	A338100311-200		. . . BOLT used on 010A, 010B, 010C, 010D, 010E, 010F, 010G, 010H, 010J, 010K, 010L		002
170A	A338100308-200		. . . WASHER used on 010A, 010B, 010C, 010D, 010E, 010F, 010G, 010H, 010J, 010K, 010L		008
180A	AN415-5		. . . PIN-LOCK BUY PN AA55487-5 used on 010A, 010B, 010C, 010D, 010E, 010F, 010G, 010H, 010J, 010K, 010L		004
190A	NAS1096-2-6		. . SCREW BUY PN NAS1801-08-6 used on 001A, 001B, 001C, 001D, 001E, 001F, 001G, 001H, 001J, 001K, 001L, 001M, 001N		005
200A	ASNA0113-40ADL		. . WASHER used on 001A, 001B, 001C, 001D, 001E, 001F, 001G, 001H, 001J, 001K, 001L, 001M, 001N		007
210A	NAS1096-2-7		. . SCREW BUY PN NAS1801-08-7 used on 001A, 001B, 001C, 001D, 001E, 001F, 001G, 001H, 001J, 001K, 001L, 001M, 001N		004
220A	NAS1149CN832R		. . WASHER used on 001A, 001B, 001C, 001D, 001E, 001F, 001G, 001H, 001J, 001K, 001L, 001M, 001N		008

- ITEM NOT ILLUSTRATED

FIG. ITEM	PART NUMBER	AIRLINE STOCK NUMBER	NOMENCLATURE 1234567	EFF CODE	UNITS PER ASSY
230A	C922-45-10-00		. . DISPENSER ASSY-LIQUID SOAP BUY PN B822-40-10 used on 001A, 001B, 001E, 001F, 001G, 001J, 001K, 001L		001
-230B	CLE3013-5		. . DISPENSER-LIQUID SOAP used on 001C		001
-230C	TRBR10NW		. . BOTTLE-LIQUID SOAP DISPENSER used on 001H		001
-230D	B822-40-10		. . DISPENSER-LIQUID SOAP used on 001M		001
235A	TRBASE125		. . SUPPORT-LIQUID SOAP DISPENSER used on 001C, 001H		001
-235B	TRBASE125G1		. . SUPPORT-LIQUID SOAP DISPENSER used on 001N		001
240A	A225400420-008		. . BRACKET-WASHBASIN UNIT used on 001A, 001B, 001C, 001D, 001E, 001F, 001G, 001H, 001J, 001K, 001L, 001M, 001N		001
-250A	NSA5054-08		. . . INSERT used on 240A		002
260A	NAS1096-2-5		. . SCREW BUY PN NAS1801-08-5 used on 001A, 001B, 001C, 001D, 001E, 001F, 001G, 001H, 001J, 001K, 001L, 001M, 001N		002

- ITEM NOT ILLUSTRATED

FIG. ITEM	PART NUMBER	AIRLINE STOCK NUMBER	NOMENCLATURE 1234567	EFF CODE	UNITS PER ASSY
270A	A225400420-010		. . ANGLE used on 001A, 001B, 001C, 001D, 001E, 001F, 001G, 001H, 001J, 001K, 001L, 001M, 001N		002
280A	NAS1068A08		. . . NUT BUY PN MS21075L08 used on 270A		001
290A	NAS1096-2-12		. . SCREW BUY PN NAS1801-08-12 used on 001A, 001B, 001C, 001D, 001E, 001F, 001G, 001H, 001J, 001K, 001L, 001M, 001N		002
300A	NSA5067-08-1		. . NUT used on 001A, 001B, 001C, 001D, 001E, 001F, 001G, 001H, 001J, 001K, 001L, 001M, 001N		004
310A	NAS1100-3-4		. . SCREW used on 001A, 001B, 001C, 001D, 001E, 001F, 001G, 001H, 001J, 001K, 001L, 001M, 001N		002

- ITEM NOT ILLUSTRATED

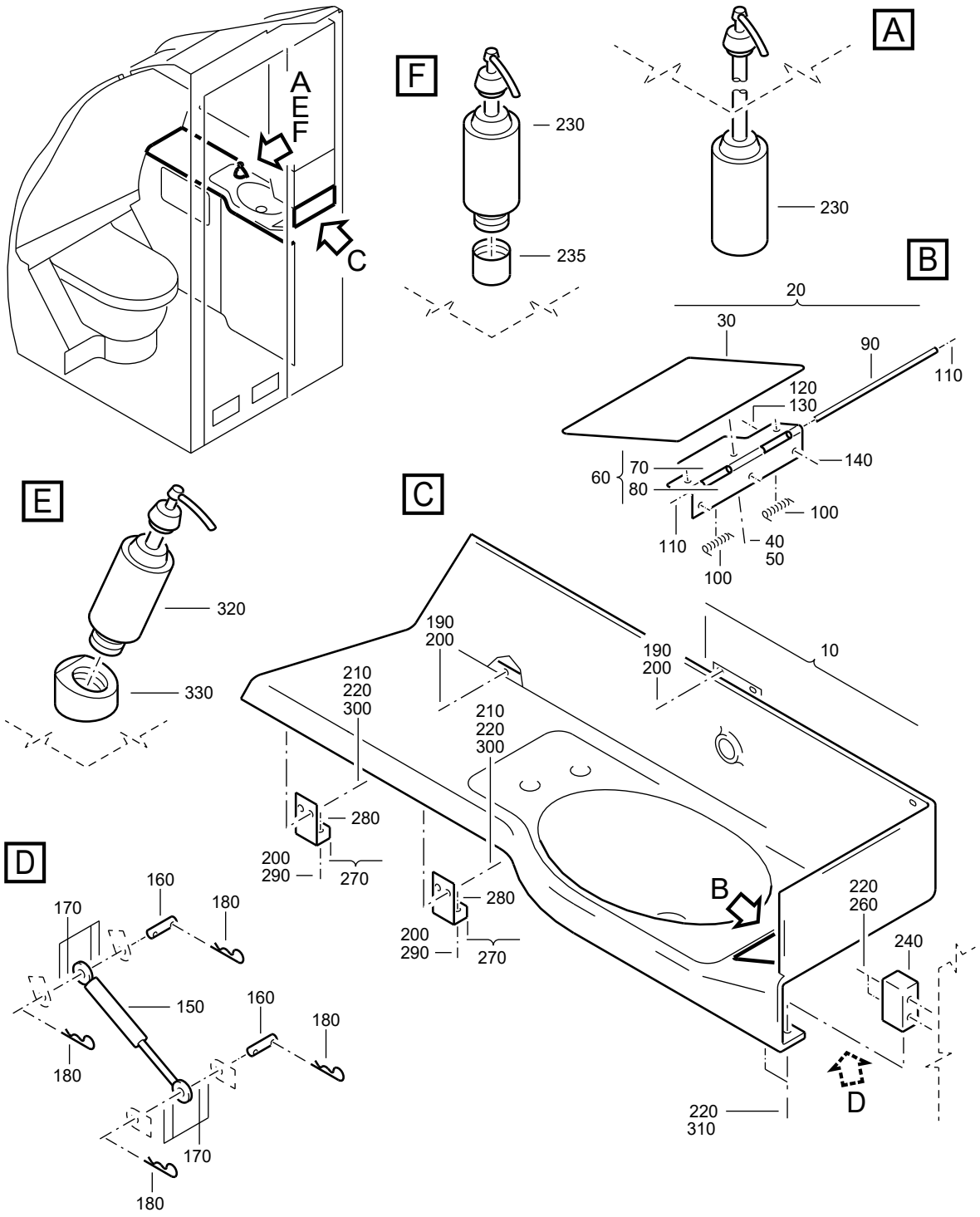

F_PL_254151_15_G_01_00

WASHBASIN UNIT
Figure 15G/EN254151SHEET15G01

FIG. ITEM	PART NUMBER	AIRLINE STOCK NUMBER	NOMENCLATURE 1234567	EFF CODE	UNITS PER ASSY
15G					
-001A	D2549030510874		. WASHBASIN UNIT NP used on 110E (25415101T), 110C (25415101V) SEE 25-41-51-01T FOR NHA SEE 25-41-51-01V FOR NHA		RF
-001B	D2549010602074		. WASHBASIN UNIT NP used on 110E (25415101U), 110D (25415101X), 110E(25415141C) SEE 25-41-51-01U FOR NHA SEE 25-41-51-01X FOR NHA SEE 25-41-51-41C FOR NHA		RF
-001C	D2549030508274		. WASHBASIN UNIT NP used on 110J (25415101Q) SEE 25-41-51-01Q FOR NHA		RF

- ITEM NOT ILLUSTRATED

FIG. ITEM	PART NUMBER	AIRLINE STOCK NUMBER	NOMENCLATURE 1234567	EFF CODE	UNITS PER ASSY
-001D	D2549020704674		. WASHBASIN UNIT NP used on 110A (25415101Q), 110F (25415101S), 110D(25415101V), 110B (25415101W), 110C (25415101Y), 110D(25415101Z), 110E (254151410), 110A (25415141A), 110E(25415141A), 110J (25415141B), 110E (25415141D), 110B(25415141G), 110C (25415141J), 110H (25415141M), 110A(25415141N), 110B (25415141P), 120A (25415141Q), 110E(25415141R), 110B (25415141S), 110C (25415141U), 110C(25415141V), 110C (25415141W), 110B (25415141Z), 110A(25415142B), 110C (25415142C), 110C (25415142D), 110G(25415142G), 110D (25415142K) SEE 25-41-51-01Q FOR NHA SEE 25-41-51-01S FOR NHA SEE 25-41-51-01V FOR NHA SEE 25-41-51-01W FOR NHA SEE 25-41-51-01Y FOR NHA SEE 25-41-51-01Z FOR NHA SEE 25-41-51-410 FOR NHA SEE 25-41-51-41A FOR NHA SEE 25-41-51-41A FOR NHA SEE 25-41-51-41B FOR NHA SEE 25-41-51-41D FOR NHA SEE 25-41-51-41G FOR NHA SEE 25-41-51-41J FOR NHA SEE 25-41-51-41M FOR NHA SEE 25-41-51-41N FOR NHA SEE 25-41-51-41P FOR NHA SEE 25-41-51-41Q FOR NHA SEE 25-41-51-41R FOR NHA SEE 25-41-51-41S FOR NHA SEE 25-41-51-41U FOR NHA		RF

- ITEM NOT ILLUSTRATED

FIG. ITEM	PART NUMBER	AIRLINE STOCK NUMBER	NOMENCLATURE 1234567	EFF CODE	UNITS PER ASSY
			SEE 25-41-51-41V FOR NHA SEE 25-41-51-41W FOR NHA SEE 25-41-51-41Z FOR NHA SEE 25-41-51-42B FOR NHA SEE 25-41-51-42C FOR NHA SEE 25-41-51-42D FOR NHA SEE 25-41-51-42G FOR NHA SEE 25-41-51-42K FOR NHA		
-001E	D2549030509874		. WASHBASIN UNIT NP used on 110G (25415101V), 110D (25415101W), 110F(25415101Z), 110B (25415141C), 110C (25415141G), 110D(25415141J), 110F (25415141K), 110D (25415141M), 110B(25415141R), 110B (25415141T), 110J (25415141X), 110E(25415141Y), 110F (25415141Y), 110E (25415142A), 110G(25415142B) SEE 25-41-51-01V FOR NHA SEE 25-41-51-01W FOR NHA SEE 25-41-51-01Z FOR NHA SEE 25-41-51-41C FOR NHA SEE 25-41-51-41G FOR NHA SEE 25-41-51-41J FOR NHA SEE 25-41-51-41K FOR NHA SEE 25-41-51-41M FOR NHA SEE 25-41-51-41R FOR NHA SEE 25-41-51-41T FOR NHA SEE 25-41-51-41X FOR NHA SEE 25-41-51-41Y FOR NHA SEE 25-41-51-41Y FOR NHA SEE 25-41-51-42A FOR NHA SEE 25-41-51-42B FOR NHA		RF
-001F	D2549020704274		. WASHBASIN UNIT NP used on 110J (25415101W) SEE 25-41-51-01W FOR NHA		RF

- ITEM NOT ILLUSTRATED

FIG. ITEM	PART NUMBER	AIRLINE STOCK NUMBER	NOMENCLATURE 1234567	EFF CODE	UNITS PER ASSY
-001G	D2549020700674		. WASHBASIN UNIT NP used on 110H (25415101X), 110E (25415101Y), 110E(25415101Z), 110F (25415141D), 110A (25415141P), 110H(25415141R), 110E (25415141V), 110D (25415141X), 110C(25415141Z), 110F (254151420), 110C (25415142A), 110B(25415142B), 110B (25415142D), 110A (25415142F) SEE 25-41-51-01X FOR NHA SEE 25-41-51-01Y FOR NHA SEE 25-41-51-01Z FOR NHA SEE 25-41-51-41D FOR NHA SEE 25-41-51-41P FOR NHA SEE 25-41-51-41R FOR NHA SEE 25-41-51-41V FOR NHA SEE 25-41-51-41X FOR NHA SEE 25-41-51-41Z FOR NHA SEE 25-41-51-420 FOR NHA SEE 25-41-51-42A FOR NHA SEE 25-41-51-42B FOR NHA SEE 25-41-51-42D FOR NHA SEE 25-41-51-42F FOR NHA		RF
-001H	D2549030511274		. WASHBASIN UNIT NP used on 110D (25415101U), 110H (25415101V), 110F(25415141R) SEE 25-41-51-01U FOR NHA SEE 25-41-51-01V FOR NHA SEE 25-41-51-41R FOR NHA		RF

- ITEM NOT ILLUSTRATED

FIG. ITEM	PART NUMBER	AIRLINE STOCK NUMBER	NOMENCLATURE 1234567	EFF CODE	UNITS PER ASSY
-001J	D2549030514674		. WASHBASIN UNIT NP PRE VSB A2-254-25-039 PRE VSB A2-254-25-106 PRE VSB A2-254-25-130 used on 110G (25415101X), 110A (25415101Y), 110A(25415101Z), 110A (254151410), 110G (25415141A), 110A(25415141C), 110D (25415141D), 110B (25415141F), 110H(25415141G), 110A (25415141H), 110E (25415141J), 110D(25415141K), 110C (25415141L), 110F (25415141N), 110C(25415141P), 110A (25415141R), 110C (25415141S), 110G(25415141W), 110G (25415141X), 110G (25415141Y), 110A(25415141Z), 110H (254151420), 110D (25415142A), 110H(25415142B), 110B (25415142C), 110A (25415142D), 110A(25415142E), 110D (25415142F), 110D (25415142G) SEE 25-41-51-01X FOR NHA SEE 25-41-51-01Y FOR NHA SEE 25-41-51-01Z FOR NHA SEE 25-41-51-410 FOR NHA SEE 25-41-51-41A FOR NHA SEE 25-41-51-41C FOR NHA SEE 25-41-51-41D FOR NHA SEE 25-41-51-41F FOR NHA SEE 25-41-51-41G FOR NHA SEE 25-41-51-41H FOR NHA SEE 25-41-51-41J FOR NHA SEE 25-41-51-41K FOR NHA SEE 25-41-51-41L FOR NHA SEE 25-41-51-41N FOR NHA SEE 25-41-51-41P FOR NHA SEE 25-41-51-41R FOR NHA		RF

- ITEM NOT ILLUSTRATED

FIG. ITEM	PART NUMBER	AIRLINE STOCK NUMBER	NOMENCLATURE 1234567		EFF CODE	UNITS PER ASSY
			SEE 25-41-51-41S FOR NHA SEE 25-41-51-41W FOR NHA SEE 25-41-51-41X FOR NHA SEE 25-41-51-41Y FOR NHA SEE 25-41-51-41Z FOR NHA SEE 25-41-51-420 FOR NHA SEE 25-41-51-42A FOR NHA SEE 25-41-51-42B FOR NHA SEE 25-41-51-42C FOR NHA SEE 25-41-51-42D FOR NHA SEE 25-41-51-42E FOR NHA SEE 25-41-51-42F FOR NHA SEE 25-41-51-42G FOR NHA			
-001K	D2549020704474		. WASHBASIN UNIT used on 110J (25415101X) SEE 25-41-51-01X FOR NHA	NP		RF
-001L	D2549020614874		. WASHBASIN UNIT used on 110K (25415101W) SEE 25-41-51-01W FOR NHA	NP		RF
-001M	D2549030600874		. WASHBASIN UNIT PRE VSB A2-254-25-039 used on 110D (25415101Y), 110D (25415141C), 110A(25415141F), 110J (25415141H), 110G (25415141N), 110B(25415141W), 110C (25415141X), 110B (254151420) SEE 25-41-51-01Y FOR NHA SEE 25-41-51-41C FOR NHA SEE 25-41-51-41F FOR NHA SEE 25-41-51-41H FOR NHA SEE 25-41-51-41N FOR NHA SEE 25-41-51-41W FOR NHA SEE 25-41-51-41X FOR NHA SEE 25-41-51-420 FOR NHA	NP		RF

- ITEM NOT ILLUSTRATED

FIG. ITEM	PART NUMBER	AIRLINE STOCK NUMBER	NOMENCLATURE 1234567	EFF CODE	UNITS PER ASSY
-001N	D2549030407474		. WASHBASIN UNIT NP used on 110K (254151420) SEE 25-41-51-420 FOR NHA		RF
-001P	R22540162200274		. WASHBASIN UNIT NP POST VSB A2-254-25-039 used on 110H (25415141Y) SEE 25-41-51-41Y FOR NHA		RF
-001Q	R22540116800074		. WASHBASIN UNIT NP POST VSB A2-254-25-039 used on 110K (25415141H), 110J (25415141N) SEE 25-41-51-41H FOR NHA SEE 25-41-51-41N FOR NHA		RF
-001R	R22540166200074		. WASHBASIN UNIT NP POST VSB A2-254-25-106 used on 110E (25415142C), 110L (25415142G) SEE 25-41-51-42C FOR NHA SEE 25-41-51-42G FOR NHA		RF
-001S	R22540119604674		. WASHBASIN UNIT NP POST VSB A2-254-25-130 used on 110H (254151410), 110K (25415141K), 110K (25415141N), 110J (25415141R), 110K (25415141X) SEE 25-41-51-410 FOR NHA SEE 25-41-51-41K FOR NHA SEE 25-41-51-41N FOR NHA SEE 25-41-51-41R FOR NHA SEE 25-41-51-41X FOR NHA		RF
010A	A238101255-032		. . WASHBASIN ASSY used on 001A		001

- ITEM NOT ILLUSTRATED

FIG. ITEM	PART NUMBER	AIRLINE STOCK NUMBER	NOMENCLATURE 1234567	EFF CODE	UNITS PER ASSY
-010B	A238101255-006		. . WASHBASIN ASSY PRE VSB A2-254-25-130 used on 001B, 001C, 001F, 001J, 001K, 001N, 001P, 001R		001
-010C	A238101255-002		. . WASHBASIN ASSY used on 001D, 001L		001
-010D	A238101255-010		. . WASHBASIN ASSY used on 001E		001
-010E	A238101255-018		. . WASHBASIN ASSY used on 001G		001
-010F	A238101255-034		. . WASHBASIN ASSY used on 001H		001
-010G	A238101255-028		. . WASHBASIN ASSY used on 001M, 001Q		001
-010H	A238101258-136		. . WASHBASIN ASSY POST VSB A2-254-25-130 used on 001S		001
020A	DCIN122-19-4		. . . FLAP ASSY-WASTE PRE VSB A2-254-25-130 used on 010A, 010B, 010C, 010D, 010F, 010G		001
-020B	DCIN122-19-3		. . . FLAP ASSY-WASTE used on 010E		001
-020C	DCIN122-9-18P		. . . FLAP ASSY-WASTE POST VSB A2-254-25-130 used on 010H		001
030A	DCIN123-19-4		. . . . FLAP used on 020A		001
-030B	DCIN123-19-3		. . . . FLAP used on 020B		001

- ITEM NOT ILLUSTRATED

FIG. ITEM	PART NUMBER	AIRLINE STOCK NUMBER	NOMENCLATURE 1234567	EFF CODE	UNITS PER ASSY
040A	NAS1096-2-4		. . . . SCREW BUY PN NAS1801-08-4 used on 020A, 020B		003
050A	ASNA0113-48ADL		. . . . WASHER used on 020A, 020B		003
060A	DCIN112-08		. . . . HINGE ASSY used on 020A, 020B		001
070A	DCIN112-05		. . . . . HINGE HALF-FLAP used on 060A		001
080A	DCIN112-06		. . . . . HINGE HALF-WASHBASIN used on 060A		001
090A	DCIN112-04		. . . . . AXLE used on 060A		001
100A	DCIN112-01		. . . . . SPRING used on 060A		002
110A	DCIN112-07		. . . . . RING-RETAINING used on 060A		002
120A	NAS1096-2-7		. . . SCREW BUY PN NAS1801-08-7 PRE VSB A2-254-25-130 used on 010A, 010B, 010C, 010D, 010E, 010F, 010G		003
-120B	NAS1801-08-7		. . . SCREW POST VSB A2-254-25-130 used on 010H		003
130A	ASNA0113-40ADL		. . . WASHER used on 010A, 010B, 010C, 010D, 010E, 010F, 010G, 010H		003

- ITEM NOT ILLUSTRATED

FIG. ITEM	PART NUMBER	AIRLINE STOCK NUMBER	NOMENCLATURE 1234567	EFF CODE	UNITS PER ASSY
140A	ABS0365-08-1		. . . NUT-CLIP BUY PN ABS0365-08-1B used on 010A, 010B, 010C, 010D, 010E, 010F, 010G, 010H		003
150A	9855DV		. . . DAMPER used on 010A, 010B, 010C, 010D, 010E, 010F, 010G, 010H		001
160A	A338100311-200		. . . BOLT used on 010A, 010B, 010C, 010D, 010E, 010F, 010G, 010H		002
170A	A338100308-200		. . . WASHER used on 010A, 010B, 010C, 010D, 010E, 010F, 010G, 010H		008
180A	AN415-5		. . . PIN-LOCK BUY PN AA55487-5 used on 010A, 010B, 010C, 010D, 010E, 010F, 010G, 010H		004
190A	NAS1096-2-5		. . SCREW PRE VSB A2-254-25-130 BUY PN NAS1801-08-5 used on 001A, 001B, 001C, 001D, 001E, 001F, 001G, 001H, 001J, 001K, 001L, 001M, 001N, 001P, 001Q, 001R		005
-190B	NAS1801-08-5		. . SCREW POST VSB A2-254-25-130 used on 001S		008
200A	ASNA0113-40ADL		. . WASHER PRE VSB A2-254-25-130 used on 001A, 001B, 001C, 001D, 001E, 001F, 001G, 001H, 001J, 001K, 001L, 001M, 001N, 001P, 001Q, 001R		015

- ITEM NOT ILLUSTRATED

FIG. ITEM	PART NUMBER	AIRLINE STOCK NUMBER	NOMENCLATURE 1234567	EFF CODE	UNITS PER ASSY
-200B	ASNA0113-40ADL		. . WASHER POST VSB A2-254-25-130 used on 001S		010
210A	NAS1096-2-7		. . SCREW BUY PN NAS1801-08-7 used on 001A, 001B, 001C, 001D, 001E, 001F, 001G, 001H, 001J, 001K, 001L, 001M, 001N, 001P, 001Q, 001R, 001S		004
220A	NAS1149CN832R		. . WASHER PRE VSB A2-254-25-130 used on 001A, 001B, 001C, 001D, 001E, 001F, 001G, 001H, 001J, 001K, 001L, 001M, 001N, 001P, 001Q, 001R		008
-220B	NAS1149CN832R		. . WASHER POST VSB A2-254-25-130 used on 001S		005
-225A	ASNA0113-40ADL		. . WASHER POST VSB A2-254-25-130 used on 001S		002
230A	C922-45-10-00		. . DISPENSER ASSY-LIQUID SOAP BUY PN B822-40-10 used on 001A		001
-230B	B822K40-10-11		. . DISPENSER-LIQUID SOAP used on 001B		001
-230C	C922-45-10-13		. . DISPENSER ASSY-LIQUID SOAP BUY PN B822-40-10-13 used on 001C		001

- ITEM NOT ILLUSTRATED

FIG. ITEM	PART NUMBER	AIRLINE STOCK NUMBER	NOMENCLATURE 1234567	EFF CODE	UNITS PER ASSY
-230D	B822-40-10		. . DISPENSER-LIQUID SOAP PRE VSB A2-254-25-039 PRE VSB A2-254-25-106 used on 001D, 001G, 001J, 001M, 001S		001
-230E	TRBR10AF		. . BOTTLE-LIQUID SOAP DISPENSER used on 001E		001
-230F	C922-45-10-14		. . DISPENSER ASSY-LIQUID SOAP BUY PN B822-40-10-14 used on 001F		001
-230G	B822-40-10-14		. . DISPENSER-LIQUID SOAP used on 001K		001
-230H	C922-45-10-11		. . DISPENSER ASSY-LIQUID SOAP BUY PN B822-40-10-11 used on 001L		001
-230J	TRBR10WE		. . DISPENSER ASSY-LIQUID SOAP POST VSB A2-254-25-039 used on 001P, 001Q		001
-230K	TRBR10UA7		. . DISPENSER-LIQUID SOAP POST VSB A2-254-25-106 TRBR10UA/7 used on 001R		001
235A	TRBASE125G1		. . SUPPORT-LIQUID SOAP DISPENSER used on 001E		001
-237A	TRBASE125		. . BRACKET POST VSB A2-254-25-039 POST VSB A2-254-25-106 used on 001P, 001Q, 001R		001

- ITEM NOT ILLUSTRATED

FIG. ITEM	PART NUMBER	AIRLINE STOCK NUMBER	NOMENCLATURE 1234567	EFF CODE	UNITS PER ASSY
-239A	A338100212-200		. . WASHER POST VSB A2-254-25-106 used on 001P, 001Q, 001R		001
240A	A225400420-008		. . BRACKET-WASHBASIN UNIT used on 001A, 001B, 001C, 001D, 001E, 001F, 001G, 001H, 001J, 001K, 001L, 001M, 001N, 001P, 001Q, 001R, 001S		001
-250A	NSA5054-08		. . . INSERT used on 240A		002
260A	NAS1096-2-5		. . SCREW PRE VSB A2-254-25-130 BUY PN NAS1801-08-5 used on 001A, 001B, 001C, 001D, 001E, 001F, 001G, 001H, 001J, 001K, 001L, 001M, 001N, 001P, 001Q, 001R		002
-260B	NAS1801-08-24		. . SCREW POST VSB A2-254-25-130 used on 001S		002
270A	A225400420-010		. . ANGLE used on 001A, 001B, 001C, 001D, 001E, 001F, 001G, 001H, 001J, 001K, 001L, 001M, 001N, 001P, 001Q, 001R, 001S		002
280A	NAS1068A08		. . . NUT BUY PN MS21075L08 used on 270A		002

- ITEM NOT ILLUSTRATED

FIG. ITEM	PART NUMBER	AIRLINE STOCK NUMBER	NOMENCLATURE 1234567	EFF CODE	UNITS PER ASSY
290A	NAS1096-2-12		. . SCREW PRE VSB A2-254-25-130 BUY PN NAS1801-08-12 PRE VSB A2-254-25-106 used on 001A, 001B, 001C, 001D, 001E, 001F, 001G, 001H, 001J, 001K, 001L, 001M, 001N, 001P, 001Q		002
-290B	NAS1801-08-10		. . SCREW POST VSB A2-254-25-130 POST VSB A2-254-25-106 used on 001R, 001S		002
300A	NSA5067-08-1		. . NUT used on 001A, 001B, 001C, 001D, 001E, 001F, 001G, 001H, 001J, 001K, 001L, 001M, 001N, 001P, 001Q, 001R, 001S		004
310A	NAS1100-3-4		. . SCREW PRE VSB A2-254-25-130 used on 001A, 001B, 001C, 001D, 001E, 001F, 001G, 001H, 001J, 001K, 001L, 001M, 001N, 001P, 001Q, 001R		002
-310B	NAS1801-08-5		. . SCREW POST VSB A2-254-25-130 used on 001S		001
320A	C00396-23W		. . DISPENSER-HAND LOTION used on 001A		001
330A	TRB12BCA		. . SUPPORT-LIQUID SOAP DISPENSER used on 001A		001

- ITEM NOT ILLUSTRATED

THIS PAGE IS INTENTIONALLY LEFT BLANK

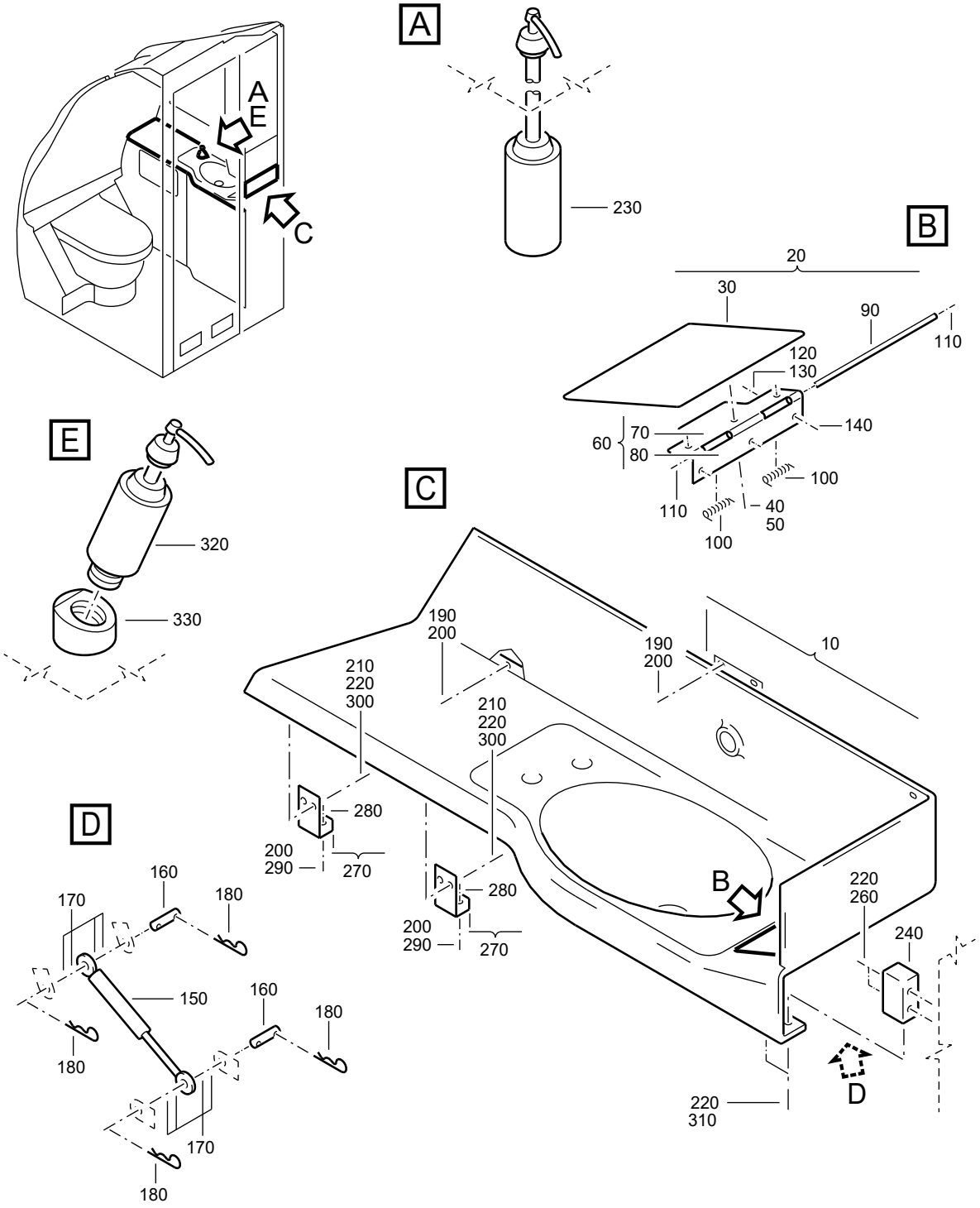

F_PL_254151_15_H_01_00

WASHBASIN UNIT
Figure 15H/EN254151SHEET15H01

FIG. ITEM	PART NUMBER	AIRLINE STOCK NUMBER	NOMENCLATURE 1234567		EFF CODE	UNITS PER ASSY
15H						
-001A	D2549020705674		. WASHBASIN UNIT used on 110F (25415101Y), 110D (25415141F), 110G(25415141H) SEE 25-41-51-01Y FOR NHA SEE 25-41-51-41F FOR NHA SEE 25-41-51-41H FOR NHA	NP		RF
-001B	D2549030600674		. WASHBASIN UNIT used on 110B (25415101Z) SEE 25-41-51-01Z FOR NHA	NP		RF
-001C	D2549020710274		. WASHBASIN UNIT PRE VSB A2-254-25-039 used on 110G (25415141C), 110J (25415141D), 110H(25415141H), 110E (25415141K), 110G (25415141R), 110H(25415141W), 110D (25415142E) SEE 25-41-51-41C FOR NHA SEE 25-41-51-41D FOR NHA SEE 25-41-51-41H FOR NHA SEE 25-41-51-41K FOR NHA SEE 25-41-51-41R FOR NHA SEE 25-41-51-41W FOR NHA SEE 25-41-51-42E FOR NHA	NP		RF
-001D	D2549010604874		. WASHBASIN UNIT used on 110C (25415141A) SEE 25-41-51-41A FOR NHA	NP		RF
-001E	D2549020707074		. WASHBASIN UNIT used on 110A (25415141D) SEE 25-41-51-41D FOR NHA	NP		RF
-001F	D2549020710674		. WASHBASIN UNIT used on 110E (25415141F) SEE 25-41-51-41F FOR NHA	NP		RF

- ITEM NOT ILLUSTRATED

FIG. ITEM	PART NUMBER	AIRLINE STOCK NUMBER	NOMENCLATURE 1234567		EFF CODE	UNITS PER ASSY
-001G	D2549030503874		. WASHBASIN UNIT used on 110H (25415141K), 110F (25415142B) SEE 25-41-51-41K FOR NHA SEE 25-41-51-42B FOR NHA	NP		RF
-001H	D2549010610074		. WASHBASIN UNIT used on 110D (25415141P), 110E (25415141S), 110D(25415142C), 110C (25415142F) SEE 25-41-51-41P FOR NHA SEE 25-41-51-41S FOR NHA SEE 25-41-51-42C FOR NHA SEE 25-41-51-42F FOR NHA	NP		RF
-001J	D2549020808274		. WASHBASIN UNIT used on 110D (25415141Y), 110J (25415142B), 110F(25415142F) SEE 25-41-51-41Y FOR NHA SEE 25-41-51-42B FOR NHA SEE 25-41-51-42F FOR NHA	NP		RF
-001K	D2549020805874		. WASHBASIN UNIT used on 110D (254151420) SEE 25-41-51-420 FOR NHA	NP		RF
-001L	D2549020812874		. WASHBASIN UNIT used on 110C (25415142B) SEE 25-41-51-42B FOR NHA	NP		RF
-001M	D2549020811874		. WASHBASIN UNIT PRE VSB A2-254-25-130 used on 110C (254151420) SEE 25-41-51-420 FOR NHA	NP		RF
-001N	R22540113600074		. WASHBASIN UNIT POST VSB A2-254-25-039 used on 110L (25415141H) SEE 25-41-51-41H FOR NHA	NP		RF

- ITEM NOT ILLUSTRATED

FIG. ITEM	PART NUMBER	AIRLINE STOCK NUMBER	NOMENCLATURE 1234567	EFF CODE	UNITS PER ASSY
-001P	R22540119605874		. WASHBASIN UNIT NP POST VSB A2-254-25-130 used on 110L (254151420) SEE 25-41-51-420 FOR NHA		RF
010A	A238101255-002		. . WASHBASIN ASSY used on 001A, 001H, 001L		001
-010B	A238101255-000		. . WASHBASIN ASSY used on 001B		001
-010C	A238101255-032		. . WASHBASIN ASSY PRE VSB A2-254-25-039 used on 001C		001
-010D	A238101255-026		. . WASHBASIN ASSY used on 001D		001
-010E	A238101255-008		. . WASHBASIN ASSY used on 001E		001
-010F	A238101255-036		. . WASHBASIN ASSY used on 001F		001
-010G	A238101255-040		. . WASHBASIN ASSY used on 001G		001
-010H	A238101255-018		. . WASHBASIN ASSY used on 001J		001
-010J	A238101255-042		. . WASHBASIN ASSY PRE VSB A2-254-25-130 used on 001K, 001M		001
-010K	A238101255-090		. . WASHBASIN ASSY POST VSB A2-254-25-039 used on 001N		001
-010L	A238101258-136		. . WASHBASIN ASSY POST VSB A2-254-25-130 used on 001P		001

- ITEM NOT ILLUSTRATED

FIG. ITEM	PART NUMBER	AIRLINE STOCK NUMBER	NOMENCLATURE 1234567	EFF CODE	UNITS PER ASSY
020A	DCIN122-19-4		. . . FLAP ASSY-WASTE PRE VSB A2-254-25-130 used on 010A, 010C, 010D, 010E, 010F, 010G, 010J, 010K		001
-020B	DCIN122-19-3		. . . FLAP ASSY-WASTE used on 010B, 010H		001
-020C	DCIN122-9-18P		. . . FLAP ASSY-WASTE POST VSB A2-254-25-130 used on 010L		001
030A	DCIN123-19-4		. . . . FLAP used on 020A		001
-030B	DCIN123-19-3		. . . . FLAP used on 020B		001
040A	NAS1096-2-4		. . . . SCREW BUY PN NAS1801-08-4 used on 020A, 020B		003
050A	ASNA0113-48ADL		. . . . WASHER used on 020A, 020B		003
060A	DCIN112-08		. . . . HINGE ASSY used on 020A, 020B		001
070A	DCIN112-05		. . . . . HINGE HALF-FLAP used on 060A		001
080A	DCIN112-06		. . . . . HINGE HALF-WASHBASIN used on 060A		001
090A	DCIN112-04		. . . . . AXLE used on 060A		001
100A	DCIN112-01		. . . . . SPRING used on 060A		002

- ITEM NOT ILLUSTRATED

FIG. ITEM	PART NUMBER	AIRLINE STOCK NUMBER	NOMENCLATURE 1234567	EFF CODE	UNITS PER ASSY
110A	DCIN112-07		. . . . . RING-RETAINING used on 060A		002
120A	NAS1096-2-7		. . . SCREW BUY PN NAS1801-08-7 PRE VSB A2-254-25-130 used on 010A, 010B, 010C, 010D, 010E, 010F, 010G, 010H, 010J, 010K		003
-120B	NAS1801-08-7		. . . SCREW POST VSB A2-254-25-130 used on 010L		003
130A	ASNA0113-40ADL		. . . WASHER used on 010A, 010B, 010C, 010D, 010E, 010F, 010G, 010H, 010J, 010K, 010L		003
140A	ABS0365-08-1		. . . NUT-CLIP BUY PN ABS0365-08-1B used on 010A, 010B, 010C, 010D, 010E, 010F, 010G, 010H, 010J, 010K, 010L		003
150A	9855DV		. . . DAMPER used on 010A, 010B, 010C, 010D, 010E, 010F, 010G, 010H, 010J, 010K, 010L		001
160A	A338100311-200		. . . BOLT used on 010A, 010B, 010C, 010D, 010E, 010F, 010G, 010H, 010J, 010K, 010L		002
170A	A338100308-200		. . . WASHER used on 010A, 010B, 010C, 010D, 010E, 010F, 010G, 010H, 010J, 010K, 010L		008

- ITEM NOT ILLUSTRATED

FIG. ITEM	PART NUMBER	AIRLINE STOCK NUMBER	NOMENCLATURE 1234567	EFF CODE	UNITS PER ASSY
180A	AN415-5		. . . PIN-LOCK BUY PN AA55487-5 used on 010A, 010B, 010C, 010D, 010E, 010F, 010G, 010H, 010J, 010K, 010L		004
190A	NAS1096-2-5		. . SCREW PRE VSB A2-254-25-130 BUY PN NAS1801-08-5 used on 001A, 001B, 001C, 001D, 001E, 001F, 001G, 001H, 001J, 001K, 001L, 001M, 001N		005
-190B	NAS1801-08-5		. . SCREW POST VSB A2-254-25-130 used on 001P		008
200A	ASNA0113-40ADL		. . WASHER PRE VSB A2-254-25-130 used on 001A, 001B, 001C, 001D, 001E, 001F, 001G, 001H, 001J, 001K, 001L, 001M, 001N		015
-200B	ASNA0113-40ADL		. . WASHER POST VSB A2-254-25-130 used on 001P		010
210A	NAS1096-2-7		. . SCREW BUY PN NAS1801-08-7 used on 001A, 001B, 001C, 001D, 001E, 001F, 001G, 001H, 001J, 001K, 001L, 001M, 001N, 001P		004
220A	NAS1149CN832R		. . WASHER PRE VSB A2-254-25-130 used on 001A, 001B, 001C, 001D, 001E, 001F, 001G, 001H, 001J, 001K, 001L, 001M, 001N		008

- ITEM NOT ILLUSTRATED

FIG. ITEM	PART NUMBER	AIRLINE STOCK NUMBER	NOMENCLATURE 1234567	EFF CODE	UNITS PER ASSY
-220B	NAS1149CN832R		. . WASHER POST VSB A2-254-25-130 used on 001P		005
-225A	ASNA0113-40ADL		. . WASHER POST VSB A2-254-25-130 used on 001P		002
230A	B822-40-10-11		. . DISPENSER-LIQUID SOAP used on 001A		001
-230B	B822-40-10		. . DISPENSER-LIQUID SOAP PRE VSB A2-254-25-039 used on 001B, 001C, 001D, 001E, 001G, 001H, 001J		001
-230C	B822K40-10		. . DISPENSER-LIQUID SOAP used on 001L		001
-230D	TRBR10WE		. . DISPENSER-LIQUID SOAP POST VSB A2-254-25-039 used on 001N		001
240A	A225400420-008		. . BRACKET-WASHBASIN UNIT used on 001A, 001B, 001C, 001D, 001E, 001F, 001G, 001H, 001J, 001K, 001L, 001M, 001N, 001P		001
-250A	NSA5054-08		. . . INSERT used on 240A		002
260A	NAS1096-2-5		. . SCREW PRE VSB A2-254-25-130 BUY PN NAS1801-08-5 used on 001A, 001B, 001C, 001D, 001E, 001F, 001G, 001H, 001J, 001K, 001L, 001M, 001N		002

- ITEM NOT ILLUSTRATED

FIG. ITEM	PART NUMBER	AIRLINE STOCK NUMBER	NOMENCLATURE 1234567	EFF CODE	UNITS PER ASSY
-260B	NAS1801-08-24		. . SCREW POST VSB A2-254-25-130 used on 001P		002
270A	A225400420-010		. . ANGLE used on 001A, 001B, 001C, 001D, 001E, 001F, 001G, 001H, 001J, 001K, 001L, 001M, 001N, 001P		002
280A	NAS1068A08		. . . NUT BUY PN MS21075L08 used on 270A		001
290A	NAS1096-2-12		. . SCREW PRE VSB A2-254-25-130 BUY PN NAS1801-08-12 used on 001A, 001B, 001C, 001D, 001E, 001F, 001G, 001H, 001J, 001K, 001L, 001M, 001N		002
-290B	NAS1801-08-10		. . SCREW POST VSB A2-254-25-130 used on 001P		002
300A	NSA5067-08-1		. . NUT used on 001A, 001B, 001C, 001D, 001E, 001F, 001G, 001H, 001J, 001K, 001L, 001M, 001N, 001P		004
310A	NAS1100-3-4		. . SCREW PRE VSB A2-254-25-130 used on 001A, 001B, 001C, 001D, 001E, 001F, 001G, 001H, 001J, 001K, 001L, 001M, 001N		002
-310B	NAS1801-08-5		. . SCREW POST VSB A2-254-25-130 used on 001P		001

- ITEM NOT ILLUSTRATED

FIG. ITEM	PART NUMBER	AIRLINE STOCK NUMBER	NOMENCLATURE 1234567	EFF CODE	UNITS PER ASSY
320A	C00396-23W		. . DISPENSER-HAND LOTION used on 001C		001
330A	TRB12BCA		. . SUPPORT-LIQUID SOAP DISPENSER used on 001C		001
340A	TRBASE125		. . BRACKET POST VSB A2-254-25-039 used on 001N		001
350A	A338100212-200		. . WASHER used on 001N		001

- ITEM NOT ILLUSTRATED

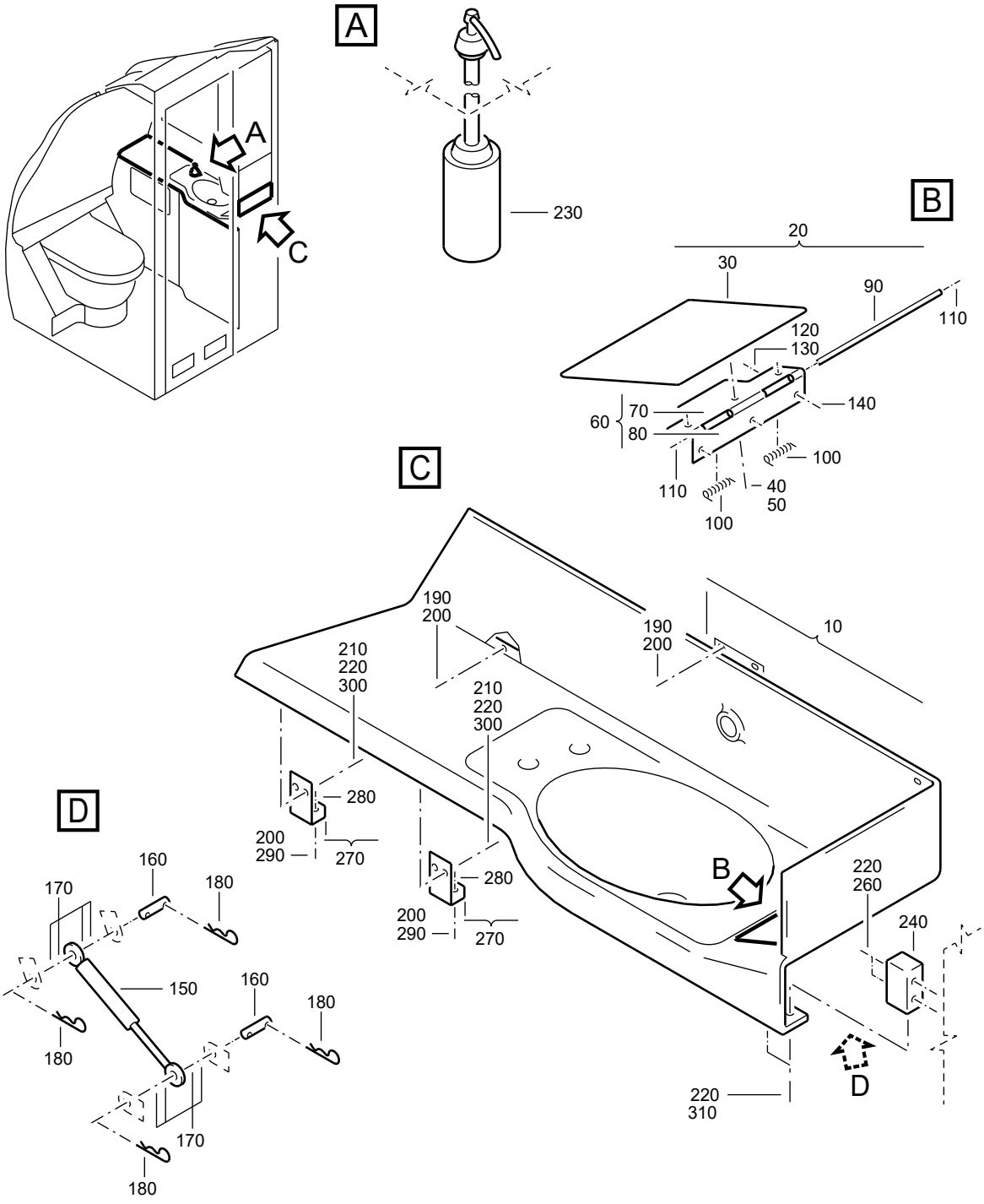

F_PL_254151_15_J_01_00

WASHBASIN UNIT
Figure 15J/EN254151SHEET15J01

FIG. ITEM	PART NUMBER	AIRLINE STOCK NUMBER	NOMENCLATURE 1234567	EFF CODE	UNITS PER ASSY
15J					
-001A	D2549030605874		. WASHBASIN UNIT NP used on 110C (25415141D), 110B (25415141K), 110D (25415141R), 110A (25415141X) SEE 25-41-51-41D FOR NHA SEE 25-41-51-41K FOR NHA SEE 25-41-51-41R FOR NHA SEE 25-41-51-41X FOR NHA		RF
010A	A238101255-000		. . WASHBASIN ASSY used on 001A		001
020A	DCIN122-19-3		. . . FLAP ASSY-WASTE used on 010A		001
030A	DCIN123-19-3		. . . . FLAP used on 020A		001
040A	NAS1096-2-4		. . . . SCREW BUY PN NAS1801-08-4 used on 020A		003
050A	ASNA0113-48ADL		. . . . WASHER used on 020A		003
060A	DCIN112-08		. . . . HINGE ASSY used on 020A		001
070A	DCIN112-05		. . . . . HINGE HALF-FLAP used on 060A		001
080A	DCIN112-06		. . . . . HINGE HALF-WASHBASIN used on 060A		001
090A	DCIN112-04		. . . . . AXLE used on 060A		001
100A	DCIN112-01		. . . . . SPRING used on 060A		002

- ITEM NOT ILLUSTRATED

FIG. ITEM	PART NUMBER	AIRLINE STOCK NUMBER	NOMENCLATURE 1234567	EFF CODE	UNITS PER ASSY
110A	DCIN112-07		. . . . . RING-RETAINING used on 060A		002
120A	NAS1096-2-7		. . . SCREW BUY PN NAS1801-08-7 used on 010A		003
130A	ASNA0113-40ADL		. . . WASHER used on 010A		003
140A	ABS0365-08-1		. . . NUT-CLIP BUY PN ABS0365-08-1B used on 010A		003
150A	9855DV		. . . DAMPER used on 010A		001
160A	A338100311-200		. . . BOLT used on 010A		002
170A	A338100308-200		. . . WASHER used on 010A		008
180A	AN415-5		. . . PIN-LOCK BUY PN AA55487-5 used on 010A		004
190A	NAS1096-2-5		. . SCREW BUY PN NAS1801-08-5 used on 001A		005
200A	ASNA0113-40ADL		. . WASHER used on 001A		015
210A	NAS1096-2-7		. . SCREW BUY PN NAS1801-08-7 used on 001A		004
220A	NAS1149CN832R		. . WASHER used on 001A		008

- ITEM NOT ILLUSTRATED

FIG. ITEM	PART NUMBER	AIRLINE STOCK NUMBER	NOMENCLATURE 1234567	EFF CODE	UNITS PER ASSY
230A	D992-30H10S14		. . DISPENSER ASSY-LIQUID SOAP used on 001A		001
240A	A225400420-008		. . BRACKET-WASHBASIN UNIT used on 001A		001
-250A	NSA5054-08		. . . INSERT used on 240A		002
260A	NAS1096-2-5		. . SCREW BUY PN NAS1801-08-5 used on 001A		002
270A	A225400420-010		. . ANGLE used on 001A		002
280A	NAS1068A08		. . . NUT BUY PN MS21075L08 used on 270A		001
290A	NAS1096-2-12		. . SCREW BUY PN NAS1801-08-12 used on 001A		002
300A	NSA5067-08-1		. . NUT used on 001A		004
310A	NAS1100-3-4		. . SCREW used on 001A		002

- ITEM NOT ILLUSTRATED

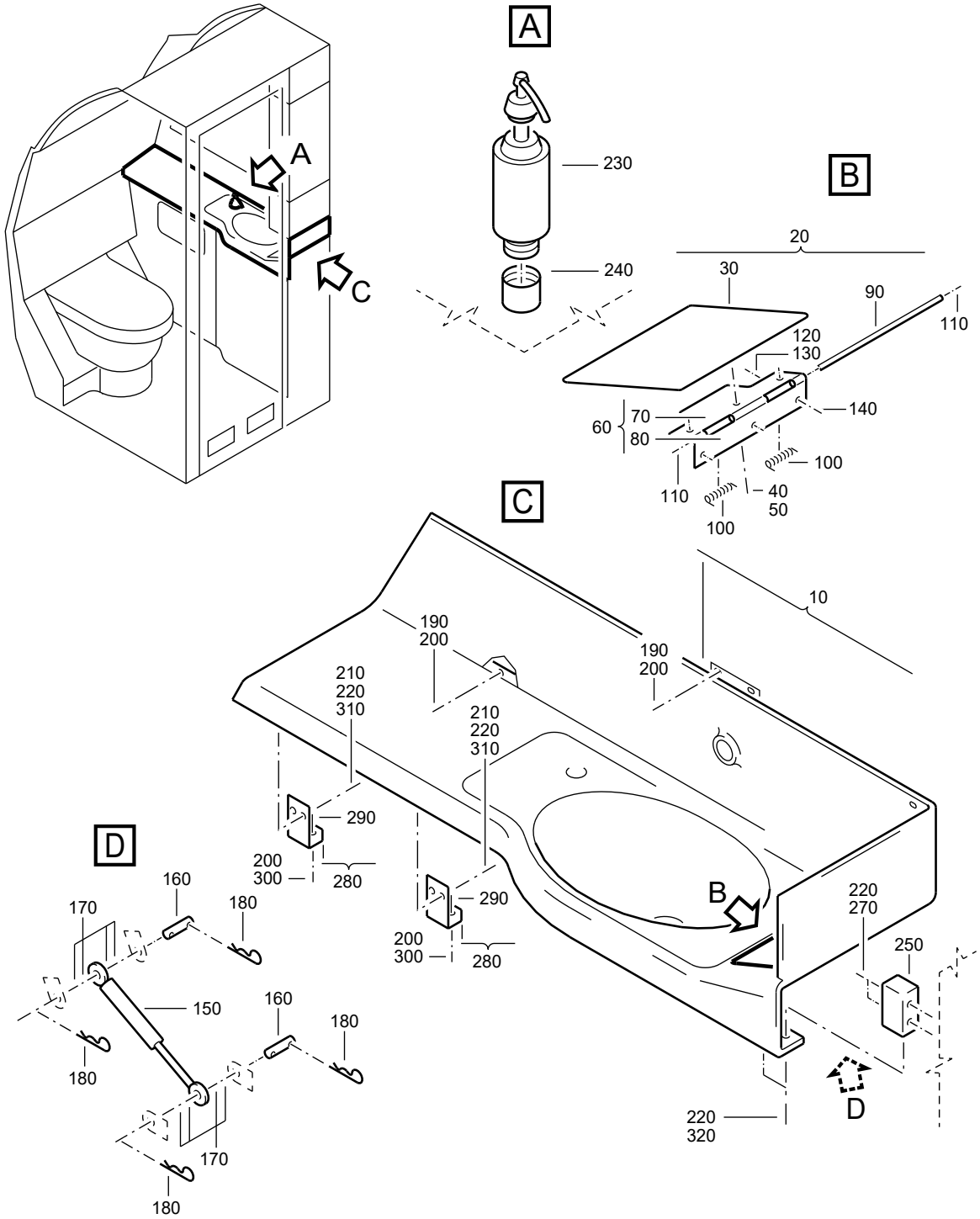

F_PL_254151_15_K_01_00

WASHBASIN UNIT
Figure 15K/EN254151SHEET15K01

FIG. ITEM	PART NUMBER	AIRLINE STOCK NUMBER	NOMENCLATURE 1234567	EFF CODE	UNITS PER ASSY
15K					
-001A	D2549020802674		. WASHBASIN UNIT NP used on 110A (25415141S), 110A (25415141T) SEE 25-41-51-41S FOR NHA SEE 25-41-51-41T FOR NHA		RF
-001B	D2549010611474		. WASHBASIN UNIT NP used on 110E (254151420) SEE 25-41-51-420 FOR NHA		RF
-001C	D2549020409274		. WASHBASIN UNIT NP PRE VSB A2-254-25-130 used on 110J (254151420) SEE 25-41-51-420 FOR NHA		RF
-001D	D2549020813274		. WASHBASIN UNIT NP used on 110D (25415142D) SEE 25-41-51-42D FOR NHA		RF
-001E	D2549020403874		. WASHBASIN UNIT NP used on 110F (25415141Z), 110F (25415142D), 110E(25415142F) SEE 25-41-51-41Z FOR NHA SEE 25-41-51-42D FOR NHA SEE 25-41-51-42F FOR NHA		RF
-001F	R22540119606274		. WASHBASIN UNIT NP POST VSB A2-254-25-130 used on 110M (254151420) SEE 25-41-51-420 FOR NHA		RF
010A	A238101255-010		. . WASHBASIN ASSY used on 001A, 001E		001
-010B	A238101255-002		. . WASHBASIN ASSY used on 001B		001
-010C	A238101255-006		. . WASHBASIN ASSY PRE VSB A2-254-25-130 used on 001C		001

- ITEM NOT ILLUSTRATED

FIG. ITEM	PART NUMBER	AIRLINE STOCK NUMBER	NOMENCLATURE 1234567	EFF CODE	UNITS PER ASSY
-010D	A238101255-044		. . WASHBASIN ASSY used on 001D		001
-010E	A238101258-136		. . WASHBASIN ASSY POST VSB A2-254-25-130 used on 001F		001
020A	DCIN122-19-4		. . . FLAP ASSY-WASTE PRE VSB A2-254-25-130 used on 010A, 010B, 010C		001
-020B	DCIN122-19-4A		. . . FLAP ASSY-WASTE used on 010D		001
-020C	DCIN122-9-18P		. . . FLAP ASSY-WASTE POST VSB A2-254-25-130 used on 010E		001
030A	DCIN123-19-4		. . . . FLAP used on 020A		001
-030B	DCIN123-19-4A		. . . . FLAP used on 020B		001
040A	NAS1096-2-4		. . . . SCREW BUY PN NAS1801-08-4 used on 020A, 020B		003
050A	ASNA0113-48ADL		. . . . WASHER used on 020A, 020B		003
060A	DCIN112-08		. . . . HINGE ASSY used on 020A, 020B		001
070A	DCIN112-05		. . . . . HINGE HALF-FLAP used on 060A		001
080A	DCIN112-06		. . . . . HINGE HALF-WASHBASIN used on 060A		001

- ITEM NOT ILLUSTRATED

FIG. ITEM	PART NUMBER	AIRLINE STOCK NUMBER	NOMENCLATURE 1234567	EFF CODE	UNITS PER ASSY
090A	DCIN112-04		. . . . . AXLE used on 060A		001
100A	DCIN112-01		. . . . . SPRING used on 060A		002
110A	DCIN112-07		. . . . . RING-RETAINING used on 060A		002
120A	NAS1096-2-7		. . . SCREW BUY PN NAS1801-08-7 PRE VSB A2-254-25-130 used on 010A, 010B, 010C, 010D		003
-120B	NAS1801-08-7		. . . SCREW POST VSB A2-254-25-130 used on 010E		003
130A	ASNA0113-40ADL		. . . WASHER used on 010A, 010B, 010C, 010D, 010E		003
140A	ABS0365-08-1		. . . NUT-CLIP BUY PN ABS0365-08-1B used on 010A, 010B, 010C, 010D, 010E		003
150A	9855DV		. . . DAMPER used on 010A, 010B, 010C, 010D, 010E		001
160A	A338100311-200		. . . BOLT used on 010A, 010B, 010C, 010D, 010E		002
170A	A338100308-200		. . . WASHER used on 010A, 010B, 010C, 010D, 010E		008

- ITEM NOT ILLUSTRATED

FIG. ITEM	PART NUMBER	AIRLINE STOCK NUMBER	NOMENCLATURE 1234567	EFF CODE	UNITS PER ASSY
180A	AN415-5		. . . PIN-LOCK BUY PN AA55487-5 used on 010A, 010B, 010C, 010D, 010E		004
190A	NAS1096-2-6		. . SCREW PRE VSB A2-254-25-130 BUY PN NAS1801-08-6 used on 001A, 001B, 001C, 001D, 001E		005
-190B	NAS1801-08-5		. . SCREW POST VSB A2-254-25-130 used on 001F		008
200A	ASNA0113-40ADL		. . WASHER PRE VSB A2-254-25-130 used on 001A, 001B, 001C, 001D, 001E		007
-200B	ASNA0113-40ADL		. . WASHER POST VSB A2-254-25-130 used on 001F		010
210A	NAS1096-2-7		. . SCREW BUY PN NAS1801-08-7 used on 001A, 001B, 001C, 001D, 001E, 001F		004
220A	NAS1149CN832R		. . WASHER PRE VSB A2-254-25-130 used on 001A, 001B, 001C, 001D, 001E		008
-220B	NAS1149CN832R		. . WASHER POST VSB A2-254-25-130 used on 001F		005

- ITEM NOT ILLUSTRATED

FIG. ITEM	PART NUMBER	AIRLINE STOCK NUMBER	NOMENCLATURE 1234567	EFF CODE	UNITS PER ASSY
-225A	ASNA0113-40ADL		. . WASHER POST VSB A2-254-25-130 used on 001F		002
230A	TRBR10AF		. . BOTTLE-LIQUID SOAP DISPENSER used on 001A		001
-230B	TRBR10W		. . BOTTLE-LIQUID SOAP DISPENSER used on 001B, 001E		001
-230C	B822-40-10		. . DISPENSER-LIQUID SOAP used on 001D		001
240A	TRBASE125GA		. . SUPPORT-LIQUID SOAP DISPENSER used on 001A		001
-240B	TRBASE125G1		. . SUPPORT-LIQUID SOAP DISPENSER used on 001E		001
-240C	TRBASE125		. . SUPPORT-LIQUID SOAP DISPENSER used on 001B		001
250A	A225400420-008		. . BRACKET-WASHBASIN UNIT used on 001A, 001B, 001C, 001D, 001E, 001F		001
-260A	NSA5054-08		. . . INSERT used on 250A		002
270A	NAS1096-2-24		. . SCREW PRE VSB A2-254-25-130 BUY PN NAS1801-08-24 used on 001A, 001B, 001C, 001D, 001E		002

- ITEM NOT ILLUSTRATED

FIG. ITEM	PART NUMBER	AIRLINE STOCK NUMBER	NOMENCLATURE 1234567	EFF CODE	UNITS PER ASSY
-270B	NAS1801-08-24		. . SCREW POST VSB A2-254-25-130 used on 001F		002
280A	A225400420-010		. . ANGLE used on 001A, 001B, 001C, 001D, 001E, 001F		002
290A	NAS1068A08		. . . NUT BUY PN MS21075L08 used on 280A		001
300A	NAS1096-2-12		. . SCREW PRE VSB A2-254-25-130 BUY PN NAS1801-08-12 used on 001A, 001B, 001C, 001D, 001E		002
-300B	NAS1801-08-10		. . SCREW POST VSB A2-254-25-130 used on 001F		002
310A	NSA5067-08-1		. . NUT used on 001A, 001B, 001C, 001D, 001E, 001F		004
320A	NAS1100-3-4		. . SCREW PRE VSB A2-254-25-130 used on 001A, 001B, 001C, 001D, 001E		002
-320B	NAS1801-08-5		. . SCREW POST VSB A2-254-25-130 used on 001F		001

- ITEM NOT ILLUSTRATED

THIS PAGE IS INTENTIONALLY LEFT BLANK

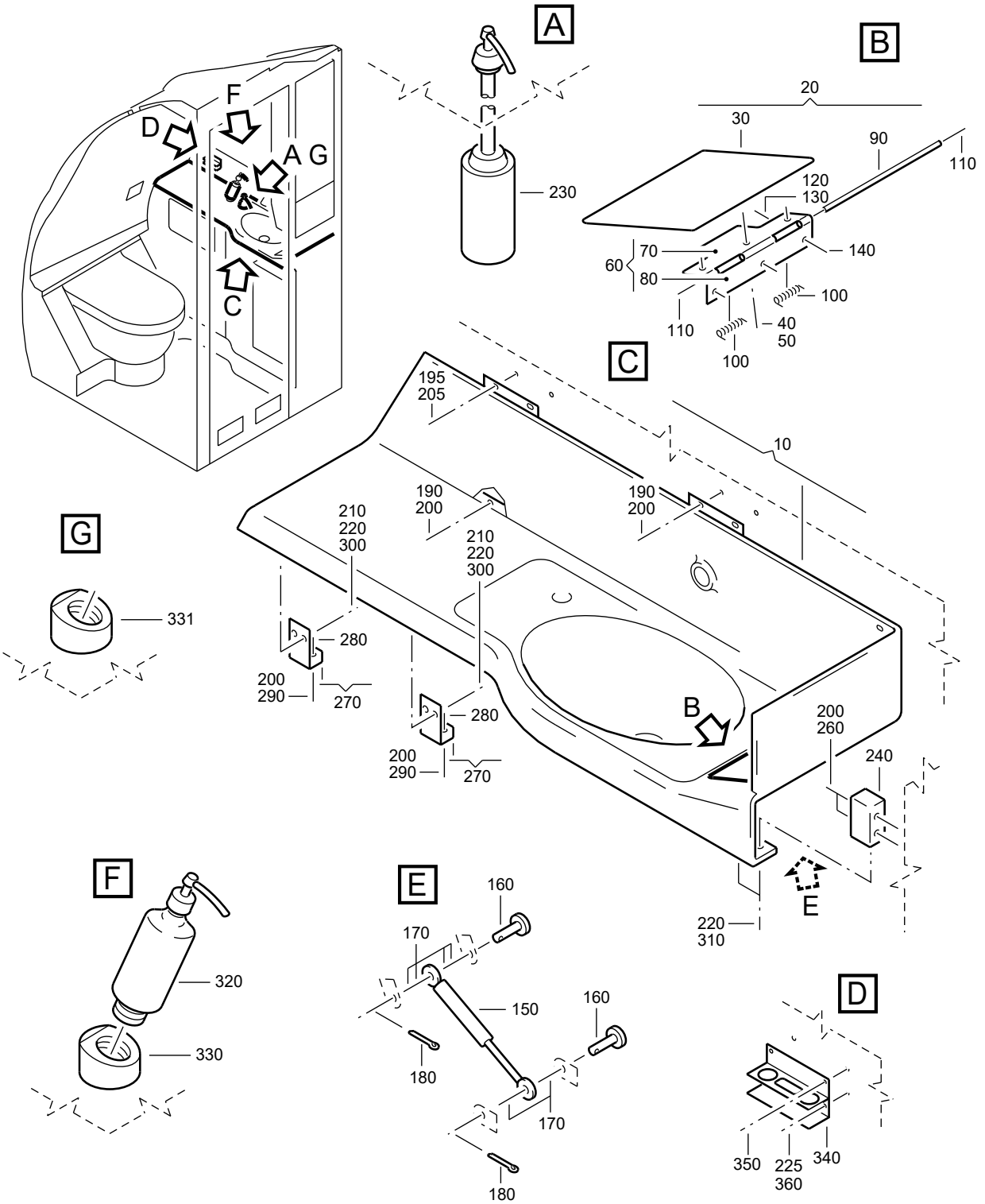

F_PL_254151_15_L_01_01

WASHBASIN UNIT
Figure 15L/EN254151SHEET15L01

FIG. ITEM	PART NUMBER	AIRLINE STOCK NUMBER	NOMENCLATURE 1234567	EFF CODE	UNITS PER ASSY
15L					
-001A	D2549020407674		. WASHBASIN UNIT NP used on 110A (25415142G) SEE 25-41-51-42G FOR NHA		RF
-001B	D2549020401274		. WASHBASIN UNIT NP used on 110E (25415142E), 110B (25415142P) SEE 25-41-51-42E FOR NHA SEE 25-41-51-42P FOR NHA		RF
-001C	D2549030410274		. WASHBASIN UNIT NP used on 110J (25415142E), 110G (25415142F), 110B(25415142T) SEE 25-41-51-42E FOR NHA SEE 25-41-51-42F FOR NHA SEE 25-41-51-42T FOR NHA		RF
-001D	D2549020403474		. WASHBASIN UNIT NP used on 110H (25415142E), 110C (25415142P) SEE 25-41-51-42E FOR NHA SEE 25-41-51-42P FOR NHA		RF
-001E	D2549020404074		. WASHBASIN UNIT NP used on 110H (25415142F), 110J (25415142G), 110A(25415142H), 110B (25415142K), 110G (25415142K), 110E(25415142L), 110E (25415142M), 110J (25415142N), 110E(25415142Q) SEE 25-41-51-42F FOR NHA SEE 25-41-51-42G FOR NHA SEE 25-41-51-42H FOR NHA SEE 25-41-51-42K FOR NHA SEE 25-41-51-42K FOR NHA SEE 25-41-51-42L FOR NHA SEE 25-41-51-42M FOR NHA SEE 25-41-51-42N FOR NHA SEE 25-41-51-42Q FOR NHA		RF

- ITEM NOT ILLUSTRATED

FIG. ITEM	PART NUMBER	AIRLINE STOCK NUMBER	NOMENCLATURE 1234567		EFF CODE	UNITS PER ASSY
-001F	D2549030410074		. WASHBASIN UNIT PRE VSB A2-254-25-106 used on 110J (25415142F), 110K (25415142G), 110B(25415142H), 110E (25415142H), 110A (25415142J), 110C(25415142K), 110A (25415142L), 110B (25415142M), 110C(25415142N), 110D (25415142P), 110A (25415142Q), 110A(25415142R) SEE 25-41-51-42F FOR NHA SEE 25-41-51-42G FOR NHA SEE 25-41-51-42H FOR NHA SEE 25-41-51-42H FOR NHA SEE 25-41-51-42J FOR NHA SEE 25-41-51-42K FOR NHA SEE 25-41-51-42L FOR NHA SEE 25-41-51-42M FOR NHA SEE 25-41-51-42N FOR NHA SEE 25-41-51-42P FOR NHA SEE 25-41-51-42Q FOR NHA SEE 25-41-51-42R FOR NHA	NP		RF
-001G	D2549020807274		. WASHBASIN UNIT used on 110F (25415142E) SEE 25-41-51-42E FOR NHA	NP		RF
-001H	D2549030409674		. WASHBASIN UNIT used on 110B (25415142G), 110D (25415142N) SEE 25-41-51-42G FOR NHA SEE 25-41-51-42N FOR NHA	NP		RF

- ITEM NOT ILLUSTRATED

FIG. ITEM	PART NUMBER	AIRLINE STOCK NUMBER	NOMENCLATURE 1234567		EFF CODE	UNITS PER ASSY
-001J	D2549040500674		. WASHBASIN UNIT used on 110C (25415142G), 110G (25415142H), 110A (25415142K), 110D (25415142M), 110F (25415142Q), 110D(25415142R) SEE 25-41-51-42G FOR NHA SEE 25-41-51-42H FOR NHA SEE 25-41-51-42K FOR NHA SEE 25-41-51-42M FOR NHA SEE 25-41-51-42Q FOR NHA SEE 25-41-51-42R FOR NHA	NP		RF
-001K	D2549020400874		. WASHBASIN UNIT used on 110F (25415142G) SEE 25-41-51-42G FOR NHA	NP		RF
-001L	D2549020402674		. WASHBASIN UNIT PRE VSB A2-254-25-130 used on 110G (25415142E), 110D (25415142H), 110B(25415142J), 110C (25415142M), 110H (25415142P), 110B(25415142R) SEE 25-41-51-42E FOR NHA SEE 25-41-51-42H FOR NHA SEE 25-41-51-42J FOR NHA SEE 25-41-51-42M FOR NHA SEE 25-41-51-42P FOR NHA SEE 25-41-51-42R FOR NHA	NP		RF
-001M	D2549020408274		. WASHBASIN UNIT used on 110E (25415142K) SEE 25-41-51-42K FOR NHA	NP		RF
-001N	D2549030411874		. WASHBASIN UNIT used on 110C (25415142L) SEE 25-41-51-42L FOR NHA	NP		RF

- ITEM NOT ILLUSTRATED

FIG. ITEM	PART NUMBER	AIRLINE STOCK NUMBER	NOMENCLATURE 1234567	EFF CODE	UNITS PER ASSY
-001P	D2547161903074		. WASHBASIN UNIT NP POST SB 25-1742 used on 110F (25415101G) SEE 25-41-51-01G FOR NHA		RF
-001Q	R22540168900474		. WASHBASIN UNIT NP POST VSB A2-254-25-106 used on 110F (25415142L) SEE 25-41-51-42L FOR NHA		RF
-001R	R22540119606474		. WASHBASIN UNIT NP POST VSB A2-254-25-130 used on 110K (25415142E), 110F (25415142J), 110J (25415142P) SEE 25-41-51-42E FOR NHA SEE 25-41-51-42J FOR NHA SEE 25-41-51-42P FOR NHA		
010A	A238101255-038		. . WASHBASIN ASSY used on 001A		001
-010B	A238101255-024		. . WASHBASIN ASSY used on 001B		001
-010C	A238101255-020		. . WASHBASIN ASSY used on 001C		001
-010D	A238101255-032		. . WASHBASIN ASSY used on 001D		001
-010E	A238101255-002		. . WASHBASIN ASSY used on 001E, 001N		001
-010F	A238101255-006		. . WASHBASIN ASSY PRE VSB A2-254-25-130 used on 001F, 001L, 001Q		001
-010G	A238101255-034		. . WASHBASIN ASSY used on 001G		001

- ITEM NOT ILLUSTRATED

FIG. ITEM	PART NUMBER	AIRLINE STOCK NUMBER	NOMENCLATURE 1234567	EFF CODE	UNITS PER ASSY
-010H	A238101255-046		. . WASHBASIN ASSY used on 001H		001
-010J	A238101255-010		. . WASHBASIN ASSY used on 001J		001
-010K	A238101255-044		. . WASHBASIN ASSY used on 001K		001
-010L	A238101255-048		. . WASHBASIN ASSY used on 001M		001
-010M	A238101255-112		. . WASHBASIN ASSY POST SB 25-1742 used on 001P		001
-010N	A238101258-136		. . WASHBASIN ASSY POST VSB A2-254-25-130 used on 001R		001
020A	DCIN122-19-4		. . . FLAP ASSY-WASTE PRE VSB A2-254-25-130 used on 010A, 010B, 010D, 010E, 010F, 010G, 010H, 010J, 010L, 010M		001
-020B	DCIN122-19-3		. . . FLAP ASSY-WASTE used on 010C		001
-020C	DCIN122-19-4A		. . . FLAP ASSY-WASTE used on 010K		001
-020D	DCIN122-9-18P		. . . FLAP ASSY-WASTE POST VSB A2-254-25-130 used on 010N		001
030A	DCIN123-19-4		. . . . FLAP used on 020A		001
-030B	DCIN123-19-3		. . . . FLAP used on 020B		001

- ITEM NOT ILLUSTRATED

FIG. ITEM	PART NUMBER	AIRLINE STOCK NUMBER	NOMENCLATURE 1234567	EFF CODE	UNITS PER ASSY
-030C	DCIN123-19-4A		. . . . FLAP used on 020C		001
040A	NAS1096-2-4		. . . . SCREW BUY PN NAS1801-08-4 used on 020A, 020B, 020C		003
050A	ASNA0113-48ADL		. . . . WASHER used on 020A, 020B, 020C		003
060A	DCIN112-08		. . . . HINGE ASSY used on 020A, 020B, 020C		001
070A	DCIN112-05		. . . . . HINGE HALF-FLAP used on 060A		001
080A	DCIN112-06		. . . . . HINGE HALF-WASHBASIN used on 060A		001
090A	DCIN112-04		. . . . . AXLE used on 060A		001
100A	DCIN112-01		. . . . . SPRING used on 060A		002
110A	DCIN112-07		. . . . . RING-RETAINING used on 060A		002
120A	NAS1096-2-7		. . . SCREW BUY PN NAS1801-08-7 PRE VSB A2-254-25-130 used on 010A, 010B, 010C, 010D, 010E, 010F, 010G, 010H, 010J, 010K, 010L, 010M		003
-120B	NAS1801-08-7		. . . SCREW POST VSB A2-254-25-130 used on 010N		003

- ITEM NOT ILLUSTRATED

FIG. ITEM	PART NUMBER	AIRLINE STOCK NUMBER	NOMENCLATURE 1234567	EFF CODE	UNITS PER ASSY
130A	ASNA0113-40ADL		. . . WASHER used on 010A, 010B, 010C, 010D, 010E, 010F, 010G, 010H, 010J, 010K, 010L, 010M, 010N		003
140A	ABS0365-08-1		. . . NUT-CLIP BUY PN ABS0365-08-1B used on 010A, 010B, 010C, 010D, 010E, 010F, 010G, 010H, 010J, 010K, 010L, 010M, 010N		003
150A	9855DV		. . . DAMPER used on 010A, 010B, 010C, 010D, 010E, 010F, 010G, 010H, 010J, 010K, 010L, 010M, 010N		001
160A	A438100220-202		. . . BOLT used on 010A, 010B, 010C, 010D, 010E, 010F, 010G, 010H, 010J, 010K, 010L, 010M, 010N		002
170A	A338100308-200		. . . WASHER PRE VSB A2-254-25-130 used on 010A, 010B, 010C, 010D, 010E, 010F, 010G, 010H, 010J, 010K, 010L, 010M		006
-170B	A338100308-200		. . . WASHER POST VSB A2-254-25-130 used on 010N		008
180A	DIN94-1-6X32ST		. . . PIN-COTTER PRE VSB A2-254-25-130 BUY PN IS01234-1-6X32S used on 010A, 010B, 010C, 010D, 010E, 010F, 010G, 010H, 010J, 010K, 010L, 010M		002

- ITEM NOT ILLUSTRATED

FIG. ITEM	PART NUMBER	AIRLINE STOCK NUMBER	NOMENCLATURE 1234567	EFF CODE	UNITS PER ASSY
-180B	DIN94-1-6X32ST		. . . PIN-COTTER POST VSB A2-254-25-130 BUY PN IS01234-1-6X32S used on 010N		004
190A	NAS1096-2-6		. . SCREW PRE VSB A2-254-25-130 BUY PN NAS1801-08-6 used on 001A, 001B, 001C, 001D, 001E, 001F, 001G, 001H, 001J, 001K, 001L, 001M, 001N, 001P, 001Q		013
-190B	NAS1096-2-6		. . SCREW POST VSB A2-254-25-130 used on 001R		002
-192A	NAS1801-08-5		. . SCREW POST VSB A2-254-25-130 used on 001R		006
195A	NAS1801-08-6		. . SCREW used on 001P		002
200A	ASNA0113-40ADL		. . WASHER PRE VSB A2-254-25-130 used on 001A, 001B, 001C, 001D, 001E, 001F, 001G, 001H, 001J, 001K, 001L, 001M, 001N, 001P, 001Q		017
-200B	ASNA0113-40ADL		. . WASHER POST VSB A2-254-25-130 used on 001R		012
205A	ASNA0113-40ADL		. . WASHER used on 001P		002

- ITEM NOT ILLUSTRATED

FIG. ITEM	PART NUMBER	AIRLINE STOCK NUMBER	NOMENCLATURE 1234567	EFF CODE	UNITS PER ASSY
210A	NAS1096-2-7		. . SCREW BUY PN NAS1801-08-7 used on 001A, 001B, 001C, 001D, 001E, 001F, 001G, 001H, 001J, 001K, 001L, 001M, 001N, 001P, 001Q, 001R		004
220A	NAS1149CN832R		. . WASHER PRE VSB A2-254-25-130 used on 001A, 001B, 001C, 001D, 001E, 001F, 001G, 001H, 001J, 001K, 001L, 001M, 001N, 001P, 001Q		006
-220B	NAS1149CN832R		. . WASHER POST VSB A2-254-25-130 used on 001R		005
225A	NAS1149CN832R		. . WASHER POST SB 25-1742 used on 001P		002
230A	B822-40-10		. . DISPENSER-LIQUID SOAP PRE VSB A2-254-25-106 used on 001D, 001E, 001F, 001H, 001K, 001M		001
-230D	B822-40-10-11		. . DISPENSER-LIQUID SOAP used on 001N		001
240A	A225400420-008		. . BRACKET-WASHBASIN UNIT used on 001A, 001B, 001C, 001D, 001E, 001F, 001G, 001H, 001J, 001K, 001L, 001M, 001N, 001P, 001Q, 001R		001
-250A	NSA5054-08		. . . INSERT used on 240A		002

- ITEM NOT ILLUSTRATED

FIG. ITEM	PART NUMBER	AIRLINE STOCK NUMBER	NOMENCLATURE 1234567	EFF CODE	UNITS PER ASSY
260A	NAS1096-2-5		. . SCREW PRE VSB A2-254-25-130 BUY PN NAS1801-08-5 used on 001A, 001B, 001C, 001D, 001E, 001F, 001G, 001H, 001J, 001K, 001L, 001M, 001N, 001P, 001Q		002
-260B	NAS1801-08-24		. . SCREW POST VSB A2-254-25-130 used on 001R		002
270A	A225400420-010		. . ANGLE used on 001A, 001B, 001C, 001D, 001E, 001F, 001G, 001H, 001J, 001K, 001L, 001M, 001N, 001P, 001Q, 001R		002
280A	NAS1068A08		. . . NUT BUY PN MS21075L08 used on 270A		001
290A	NAS1096-2-12		. . SCREW PRE VSB A2-254-25-130 BUY PN NAS1801-08-12 PRE VSB A2-254-25-106 used on 001A, 001B, 001C, 001D, 001E, 001F, 001G, 001H, 001J, 001K, 001L, 001M, 001N, 001P		002
-290B	NAS1801-08-10		. . SCREW POST VSB A2-254-25-130 POST VSB A2-254-25-106 used on 001Q, 001R		002

- ITEM NOT ILLUSTRATED

FIG. ITEM	PART NUMBER	AIRLINE STOCK NUMBER	NOMENCLATURE 1234567	EFF CODE	UNITS PER ASSY
300A	NSA5067-08-1		. . NUT used on 001A, 001B, 001C, 001D, 001E, 001F, 001G, 001H, 001J, 001K, 001L, 001M, 001N, 001P, 001Q, 001R		004
310A	NAS1100-3-4		. . SCREW PRE VSB A2-254-25-130 used on 001A, 001B, 001C, 001D, 001E, 001F, 001G, 001H, 001J, 001K, 001L, 001M, 001N, 001P, 001Q		002
-310B	NAS1801-08-5		. . SCREW POST VSB A2-254-25-130 used on 001R		001
320A	TRBR30SB		. . BOTTLE-PERFUME DISPENSER used on 001A		001
-320B	C00396-23W		. . DISPENSER-HAND LOTION used on 001D		001
-320C	TRBR10NW		. . BOTTLE-LIQUID SOAP DISPENSER used on 001B		001
-320D	TRBR10AF		. . BOTTLE-LIQUID SOAP DISPENSER used on 001J		001
-320E	TRBR10EG		. . BOTTLE-LIQUID SOAP DISPENSER POST SB 25-1742 used on 001P		001

- ITEM NOT ILLUSTRATED

FIG. ITEM	PART NUMBER	AIRLINE STOCK NUMBER	NOMENCLATURE 1234567	EFF CODE	UNITS PER ASSY
-320F	TRBR10UA7		. . BOTTLE-LIQUID SOAP DISPENSER POST VSB A2-254-25-106 TRBR10UA/7 used on 001Q		001
330A	TRBASE125		. . SUPPORT-LIQUID SOAP DISPENSER POST VSB A2-254-25-106 used on 001A, 001B, 001Q		001
-330B	TRB12BCA		. . SUPPORT-LIQUID SOAP DISPENSER used on 001D		001
-330C	TRBASE125G1		. . SUPPORT-LIQUID SOAP DISPENSER used on 001J		001
-330D	TRBASE125C		. . DISPENSER-FOAM SOAP POST SB 25-1742 used on 001P		001
331A	TRBASE125		. . SUPPORT-LIQUID SOAP DISPENSER used on 001A		001
-335A	A338100212-200		. . WASHER POST VSB A2-254-25-106 used on 001Q		001
340A	A2547321001000		. . HOLDER-COSMETICS POST SB 25-1742 used on 001P		001
350A	NAS1102E08-6		. . SCREW POST SB 25-1742 used on 001P		002

- ITEM NOT ILLUSTRATED

FIG. ITEM	PART NUMBER	AIRLINE STOCK NUMBER	NOMENCLATURE 1234567	EFF CODE	UNITS PER ASSY
360A	NAS1100E08-6		. . SCREW POST SB 25-1742 used on 001P		002

- ITEM NOT ILLUSTRATED

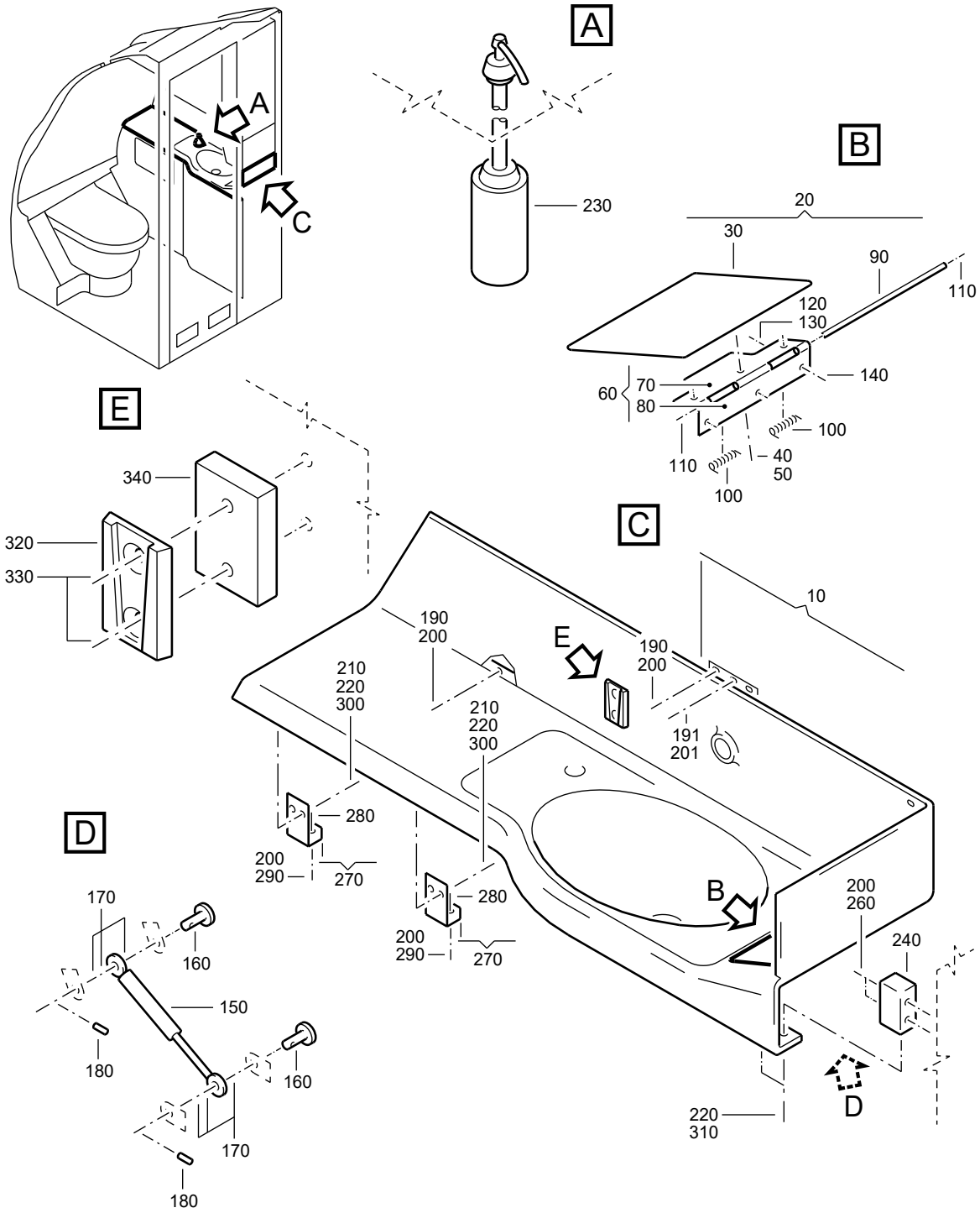

F_PL_254151_15_M_01_00

WASHBASIN UNIT
Figure 15M/EN254151SHEET15M01

FIG. ITEM	PART NUMBER	AIRLINE STOCK NUMBER	NOMENCLATURE 1234567		EFF CODE	UNITS PER ASSY
15M						
-001A	D2549020401674		. WASHBASIN UNIT used on 110F (25415142H), 110B (25415142L), 110B(25415142Q), 110A (25415142S) SEE 25-41-51-42H FOR NHA SEE 25-41-51-42L FOR NHA SEE 25-41-51-42Q FOR NHA SEE 25-41-51-42S FOR NHA	NP		RF
-001B	D2549010401674		. WASHBASIN UNIT used on 110E (25415142J) SEE 25-41-51-42J FOR NHA	NP		RF
-001C	D2549010404674		. WASHBASIN UNIT used on 110H (25415142K), 110B (25415142N), 110C(25415142Q) SEE 25-41-51-42K FOR NHA SEE 25-41-51-42N FOR NHA SEE 25-41-51-42Q FOR NHA	NP		RF
-001D	D2549010402474		. WASHBASIN UNIT used on 110E (25415142N) SEE 25-41-51-42N FOR NHA	NP		RF
-001E	D2549030414674		. WASHBASIN UNIT used on 110G (25415142N) SEE 25-41-51-42N FOR NHA	NP		RF
-001F	D2549010405274		. WASHBASIN UNIT used on 110D (25415142Q) SEE 25-41-51-42Q FOR NHA	NP		RF
-001G	D2549020411274		. WASHBASIN UNIT used on 110G (25415142Q) SEE 25-41-51-42Q FOR NHA	NP		RF
010A	A238101255-018		. . WASHBASIN ASSY used on 001A			001

- ITEM NOT ILLUSTRATED

FIG. ITEM	PART NUMBER	AIRLINE STOCK NUMBER	NOMENCLATURE 1234567	EFF CODE	UNITS PER ASSY
-010B	A238101255-024		. . WASHBASIN ASSY used on 001B		001
-010C	A238101255-016		. . WASHBASIN ASSY used on 001C		001
-010D	A238101255-050		. . WASHBASIN ASSY used on 001D		001
-010E	A238101255-052		. . WASHBASIN ASSY used on 001E		001
-010F	A238101255-054		. . WASHBASIN ASSY used on 001F		001
-010G	A238101255-056		. . WASHBASIN ASSY used on 001G		001
020A	DCIN122-19-3		. . . FLAP ASSY-WASTE used on 010A		001
-020B	DCIN122-19-4		. . . FLAP ASSY-WASTE used on 010B, 010C, 010D, 010F, 010G		001
-020C	DCIN122-19-17		. . . FLAP ASSY-WASTE used on 010E		001
030A	DCIN123-19-3		. . . . FLAP used on 020A		001
-030B	DCIN123-19-4		. . . . FLAP used on 020B		001
-030C	DCIN123-19-17		. . . . FLAP used on 020C		001
040A	NAS1096-2-4		. . . . SCREW BUY PN NAS1801-08-4 used on 020A, 020B, 020C		003

- ITEM NOT ILLUSTRATED

FIG. ITEM	PART NUMBER	AIRLINE STOCK NUMBER	NOMENCLATURE 1234567	EFF CODE	UNITS PER ASSY
050A	ASNA0113-48ADL		. . . . WASHER used on 020A, 020B, 020C		003
060A	DCIN112-08		. . . . HINGE ASSY used on 020A, 020B, 020C		001
070A	DCIN112-05		. . . . . HINGE HALF-FLAP used on 060A		001
080A	DCIN112-06		. . . . . HINGE HALF-WASHBASIN used on 060A		001
090A	DCIN112-04		. . . . . AXLE used on 060A		001
100A	DCIN112-01		. . . . . SPRING used on 060A		002
110A	DCIN112-07		. . . . . RING-RETAINING used on 060A		002
120A	NAS1096-2-7		. . . SCREW BUY PN NAS1801-08-7 used on 010A, 010B, 010C, 010D, 010E, 010F, 010G		003
130A	ASNA0113-40ADL		. . . WASHER used on 010A, 010B, 010C, 010D, 010E, 010F, 010G		003
140A	ABS0365-08-1		. . . NUT-CLIP BUY PN ABS0365-08-1B used on 010A, 010B, 010C, 010D, 010E, 010F, 010G		003
150A	9855DV		. . . DAMPER used on 010A, 010B, 010C, 010D, 010E, 010F, 010G		001

- ITEM NOT ILLUSTRATED

FIG. ITEM	PART NUMBER	AIRLINE STOCK NUMBER	NOMENCLATURE 1234567	EFF CODE	UNITS PER ASSY
160A	A438100220-202		. . . BOLT used on 010A, 010B, 010C, 010D, 010E, 010F, 010G		002
170A	A338100308-200		. . . WASHER used on 010A, 010B, 010C, 010D, 010E, 010F, 010G		006
180A	DIN94-1-6X32ST		. . . PIN-COTTER BUY PN IS01234-1-6X32S used on 010A, 010B, 010C, 010D, 010E, 010F, 010G		004
190A	NAS1096-2-6		. . SCREW BUY PN NAS1801-08-6 used on 001A, 001B, 001C, 001D, 001E, 001F, 001G		005
191A	NAS1096-2-6		. . SCREW BUY PN NAS1801-08-6 used on 001G		001
200A	ASNA0113-40ADL		. . WASHER used on 001A, 001B, 001C, 001D, 001E, 001F, 001G		017
201A	ASNA0113-40ADL		. . WASHER used on 001G		001
210A	NAS1096-2-7		. . SCREW BUY PN NAS1801-08-7 used on 001A, 001B, 001C, 001D, 001E, 001F, 001G		004
220A	NAS1149CN832R		. . WASHER used on 001A, 001B, 001C, 001D, 001E, 001F, 001G		008

- ITEM NOT ILLUSTRATED

FIG. ITEM	PART NUMBER	AIRLINE STOCK NUMBER	NOMENCLATURE 1234567	EFF CODE	UNITS PER ASSY
230A	B822-40-10		. . DISPENSER-LIQUID SOAP used on 001A, 001C, 001D, 001E, 001F		001
-230B	TRBR10W		. . BOTTLE-LIQUID SOAP DISPENSER used on 001B		001
240A	A225400420-008		. . BRACKET-WASHBASIN UNIT used on 001A, 001B, 001C, 001D, 001E, 001F, 001G		001
-250A	NSA5054-08		. . . INSERT used on 240A		002
260A	NAS1096-2-24		. . SCREW BUY PN NAS1801-08-24 used on 001A, 001B, 001C, 001D, 001E, 001F, 001G		002
270A	A225400420-010		. . ANGLE used on 001A, 001B, 001C, 001D, 001E, 001F, 001G		002
280A	NAS1068A08		. . . NUT BUY PN MS21075L08 used on 270A		001
290A	NAS1096-2-12		. . SCREW BUY PN NAS1801-08-12 used on 001A, 001B, 001C, 001D, 001E, 001F, 001G		002
300A	NSA5067-08-1		. . NUT used on 001A, 001B, 001C, 001D, 001E, 001F, 001G		004
310A	NAS1100-3-4		. . SCREW used on 001A, 001B, 001C, 001D, 001E, 001F, 001G		002

- ITEM NOT ILLUSTRATED

FIG. ITEM	PART NUMBER	AIRLINE STOCK NUMBER	NOMENCLATURE 1234567	EFF CODE	UNITS PER ASSY
320A	RF1208		. . BRACKET-SOAP DISPENSER used on 001G		001
330A	MS24693C53		. . SCREW used on 001G		002
340A	A325400472-208		. . SPACER used on 001G		001

- ITEM NOT ILLUSTRATED

THIS PAGE IS INTENTIONALLY LEFT BLANK

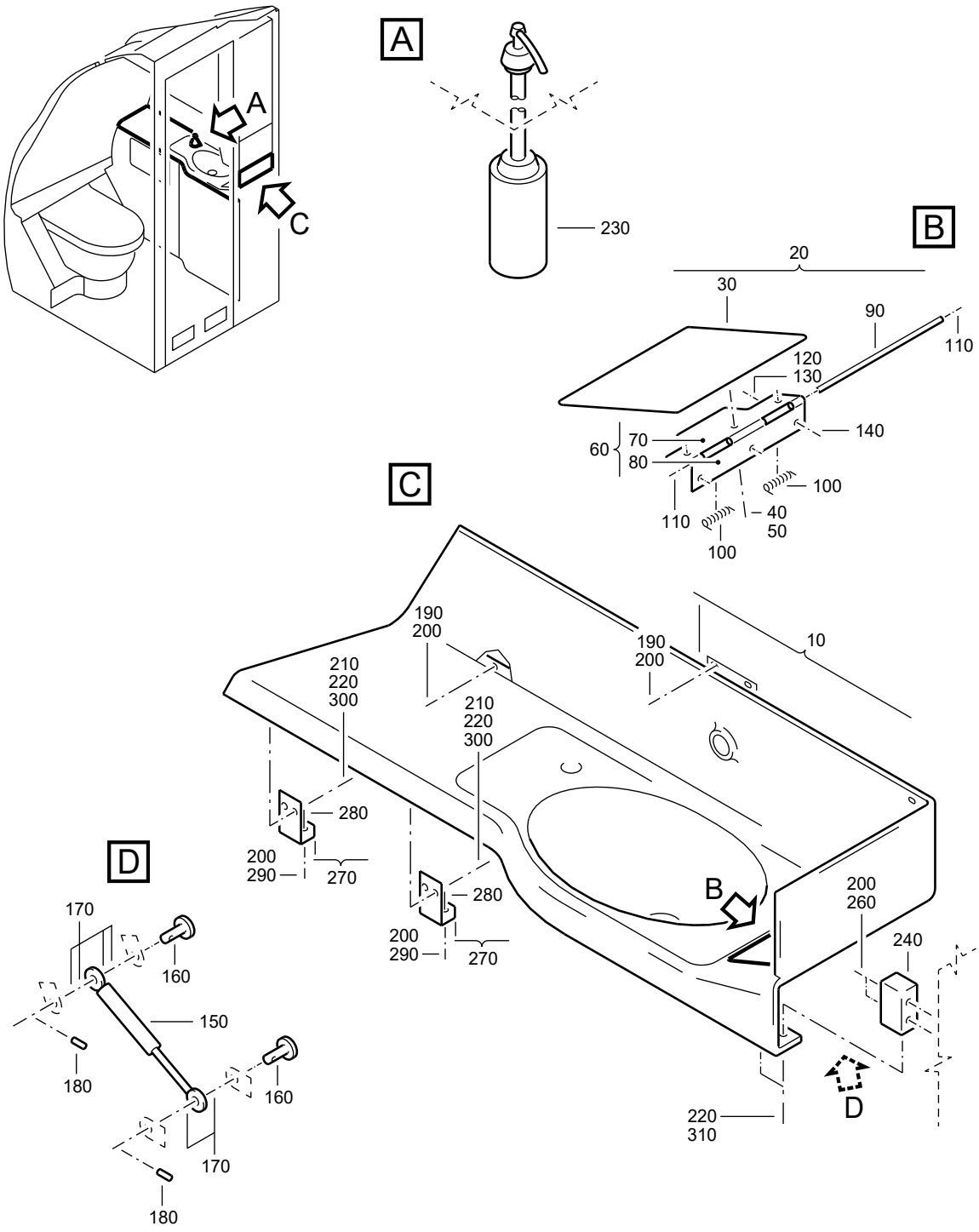

F_PL_254151_15_N_01_00

WASHBASIN UNIT
Figure 15N/EN254151SHEET15N01

FIG. ITEM	PART NUMBER	AIRLINE STOCK NUMBER	NOMENCLATURE 1234567	EFF CODE	UNITS PER ASSY
15N					
-001A	D2549010401474		. WASHBASIN UNIT NP used on 110C (25415142J), 110H (25415142N), 110A(25415142P) SEE 25-41-51-42J FOR NHA SEE 25-41-51-42N FOR NHA SEE 25-41-51-42P FOR NHA		RF
010A	A238101255-000		. . WASHBASIN ASSY used on 001A		001
020A	DCIN122-19-3		. . . FLAP ASSY-WASTE used on 010A		001
030A	DCIN123-19-3		. . . . FLAP used on 020A		001
040A	NAS1096-2-4		. . . . SCREW BUY PN NAS1801-08-4 used on 020A		003
050A	ASNA0113-48ADL		. . . . WASHER used on 020A		003
060A	DCIN112-08		. . . . HINGE ASSY used on 020A		001
070A	DCIN112-05		. . . . . HINGE HALF-FLAP used on 060A		001
080A	DCIN112-06		. . . . . HINGE HALF-WASHBASIN used on 060A		001
090A	DCIN112-04		. . . . . AXLE used on 060A		001
100A	DCIN112-01		. . . . . SPRING used on 060A		002
110A	DCIN112-07		. . . . . RING-RETAINING used on 060A		002

- ITEM NOT ILLUSTRATED

FIG. ITEM	PART NUMBER	AIRLINE STOCK NUMBER	NOMENCLATURE 1234567	EFF CODE	UNITS PER ASSY
120A	NAS1096-2-7		. . . SCREW BUY PN NAS1801-08-7 used on 010A		003
130A	ASNA0113-40ADL		. . . WASHER used on 010A		003
140A	ABS0365-08-1		. . . NUT-CLIP BUY PN ABS0365-08-1B used on 010A		003
150A	9855DV		. . . DAMPER used on 010A		001
160A	A438100220-202		. . . BOLT used on 010A		002
170A	A338100308-200		. . . WASHER used on 010A		006
180A	AN415-5		. . . PIN-LOCK BUY PN AA55487-5 used on 010A		002
190A	NAS1096-2-5		. . SCREW BUY PN NAS1801-08-5 used on 001A		005
200A	ASNA0113-40ADL		. . WASHER used on 001A		015
210A	NAS1096-2-7		. . SCREW BUY PN NAS1801-08-7 used on 001A		004
220A	NAS1149CN832R		. . WASHER used on 001A		008
230A	D992-30H10S14		. . DISPENSER ASSY-LIQUID SOAP used on 001A		001

- ITEM NOT ILLUSTRATED

FIG. ITEM	PART NUMBER	AIRLINE STOCK NUMBER	NOMENCLATURE 1234567	EFF CODE	UNITS PER ASSY
240A	A225400420-008		. . BRACKET-WASHBASIN UNIT used on 001A		001
-250A	NSA5054-08		. . . INSERT used on 240A		002
260A	NAS1096-2-5		. . SCREW BUY PN NAS1801-08-5 used on 001A		002
270A	A225400420-010		. . ANGLE used on 001A		002
280A	NAS1068A08		. . . NUT BUY PN MS21075L08 used on 270A		001
290A	NAS1096-2-12		. . SCREW BUY PN NAS1801-08-12 used on 001A		002
300A	NSA5067-08-1		. . NUT used on 001A		004
310A	NAS1100-3-4		. . SCREW used on 001A		002

- ITEM NOT ILLUSTRATED

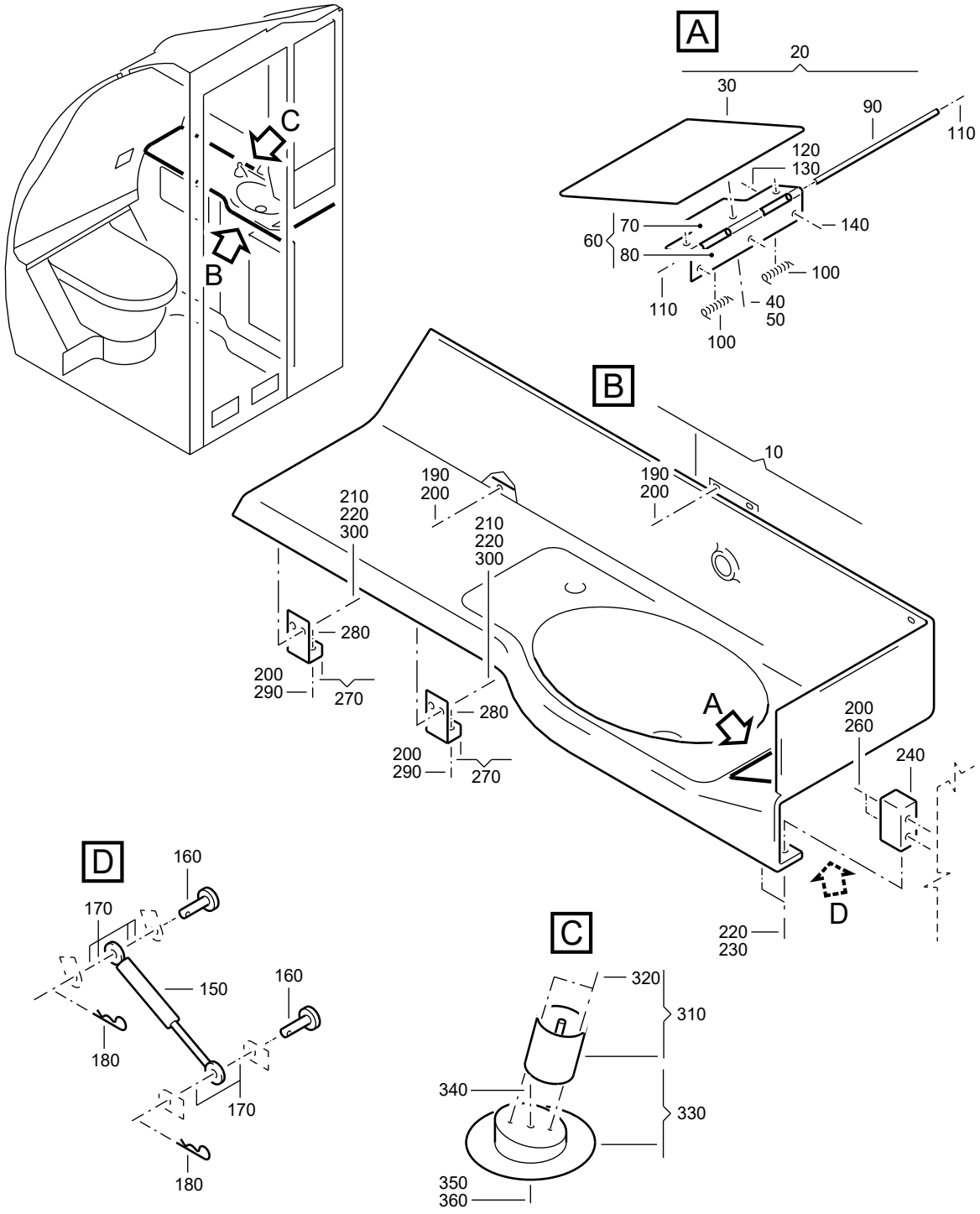

F_PL_254151_15_P_01_00

WASHBASIN UNIT
Figure 15P/EN254151SHEET15P01

FIG. ITEM	PART NUMBER	AIRLINE STOCK NUMBER	NOMENCLATURE 1234567	EFF CODE	UNITS PER ASSY
15P					
-001A	D2549020409474		. WASHBASIN UNIT NP used on 110A (25415142M) SEE 25-41-51-42M FOR NHA		RF
010A	A238101255-006		. . WASHBASIN ASSY used on 001A		001
020A	DCIN122-19-4		. . . FLAP ASSY-WASTE used on 010A		001
030A	DCIN123-19-4		. . . . FLAP used on 020A		001
040A	NAS1096-2-4		. . . . SCREW BUY PN NAS1801-08-4 used on 020A		003
050A	ASNA0113-48ADL		. . . . WASHER used on 020A		003
060A	DCIN112-08		. . . . HINGE ASSY used on 020A		001
070A	DCIN112-05		. . . . . HINGE HALF-FLAP used on 060A		001
080A	DCIN112-06		. . . . . HINGE HALF-WASHBASIN used on 060A		001
090A	DCIN112-04		. . . . . AXLE used on 060A		001
100A	DCIN112-01		. . . . . SPRING used on 060A		002
110A	DCIN112-07		. . . . . RING-RETAINING used on 060A		002

- ITEM NOT ILLUSTRATED

FIG. ITEM	PART NUMBER	AIRLINE STOCK NUMBER	NOMENCLATURE 1234567	EFF CODE	UNITS PER ASSY
120A	NAS1096-2-7		. . . SCREW BUY PN NAS1801-08-7 used on 010A		003
130A	ASNA0113-40ADL		. . . WASHER used on 010A		003
140A	ABS0365-08-1		. . . NUT-CLIP BUY PN ABS0365-08-1B used on 010A		003
150A	9855DV		. . . DAMPER used on 010A		001
160A	A438100220-202		. . . BOLT used on 010A		002
170A	A338100308-200		. . . WASHER used on 010A		006
180A	DIN94-1-6X32ST		. . . PIN-COTTER BUY PN IS01234-1-6X32S used on 010A		002
190A	NAS1096-2-7		. . SCREW BUY PN NAS1801-08-7 used on 001A		013
200A	ASNA0113-40ADL		. . WASHER used on 001A		017
210A	NAS1096-2-7		. . SCREW BUY PN NAS1801-08-7 used on 001A		004
220A	NAS1149CN832R		. . WASHER used on 001A		008
230A	NAS1100-3-4		. . SCREW used on 001A		002

- ITEM NOT ILLUSTRATED

FIG. ITEM	PART NUMBER	AIRLINE STOCK NUMBER	NOMENCLATURE 1234567	EFF CODE	UNITS PER ASSY
240A	A225400420-008		. . BRACKET-WASHBASIN UNIT used on 001A		001
-250A	NSA5054-08		. . . INSERT used on 240A		002
260A	NAS1096-2-5		. . SCREW BUY PN NAS1801-08-5 used on 001A		002
270A	A225400420-010		. . ANGLE used on 001A		002
280A	NAS1068A08		. . . NUT BUY PN MS21075L08 used on 270A		001
290A	NAS1096-2-12		. . SCREW BUY PN NAS1801-08-12 used on 001A		002
300A	NSA5067-08-1		. . NUT used on 001A		004
310A	1-11265-00-00		. . HOLDER-SOAP DISPENSER used on 001A		001
320A	NAS514P832-6		. . . SCREW used on 310A		002
330A	1-12173-00-01		. . FOOT-SOAP DISPENSER used on 001A		001
340A	NAS517-4-11		. . . SCREW used on 330A		001
350A	AN970-6		. . . WASHER used on 330A		001
360A	BACN10JC4		. . . NUT used on 330A		001

- ITEM NOT ILLUSTRATED

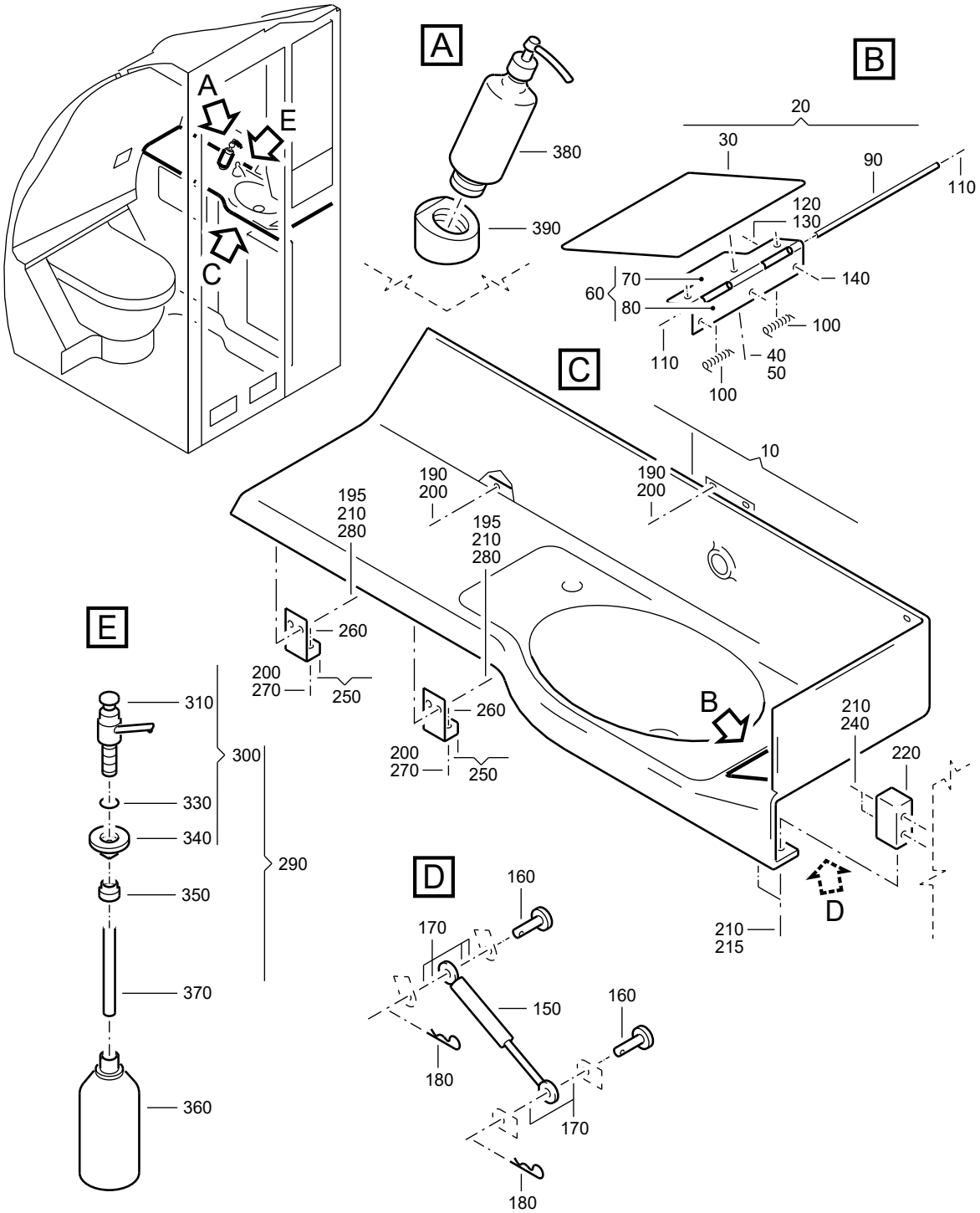

F_PL_254151_15_Q_01_00

WASHBASIN UNIT
Figure 15Q/EN254151SHEET15Q01

FIG. ITEM	PART NUMBER	AIRLINE STOCK NUMBER	NOMENCLATURE 1234567		EFF CODE	UNITS PER ASSY
15Q						
-001A	D2549020412674		. WASHBASIN UNIT PRE VSB A2-254-25-106 used on 110G (25415142R), 110B (25415142S), 110A (25415142T), 110A (25415142U) SEE 25-41-51-42R FOR NHA SEE 25-41-51-42S FOR NHA SEE 25-41-51-42T FOR NHA SEE 25-41-51-42U FOR NHA	NP		RF
-001B	D2549030702274		. WASHBASIN UNIT used on 110E (25415142P) SEE 25-41-51-42P FOR NHA	NP		RF
-001C	D2549030702074		. WASHBASIN UNIT used on 110F (25415142R) SEE 25-41-51-42R FOR NHA	NP		RF
-001D	D2549020412874		. WASHBASIN UNIT used on 110E (25415142R) SEE 25-41-51-42R FOR NHA	NP		RF
-001E	D2549020300874		. WASHBASIN UNIT used on 110F (25415142P) SEE 25-41-51-42P FOR NHA	NP		RF
-001F	D2549020302074		. WASHBASIN UNIT used on 110C (25415142S), 110C (25415142T), 110C(25415142U) SEE 25-41-51-42S FOR NHA SEE 25-41-51-42T FOR NHA SEE 25-41-51-42U FOR NHA	NP		RF
-001G	D2549030704874		. WASHBASIN UNIT used on 110F (25415142S) SEE 25-41-51-42S FOR NHA	NP		RF
-001H	D2549030705674		. WASHBASIN UNIT used on 110G (25415142S) SEE 25-41-51-42S FOR NHA	NP		RF

- ITEM NOT ILLUSTRATED

FIG. ITEM	PART NUMBER	AIRLINE STOCK NUMBER	NOMENCLATURE 1234567		EFF CODE	UNITS PER ASSY
-001J	D2549010406474		. WASHBASIN UNIT used on 110E (25415142T) SEE 25-41-51-42T FOR NHA	NP		RF
-001K	D2549010407074		. WASHBASIN UNIT used on 110B (25415142U) SEE 25-41-51-42U FOR NHA	NP		RF
-001L	R22540168900674		. WASHBASIN UNIT POST VSB A2-254-25-106 used on 110G (25415142T) SEE 25-41-51-42T FOR NHA	NP		RF
010A	A238101255-006		. . WASHBASIN ASSY used on 001A, 001L			001
-010B	A238101255-032		. . WASHBASIN ASSY used on 001B			001
-010C	A238101255-058		. . WASHBASIN ASSY used on 001C			001
-010D	A238101255-060		. . WASHBASIN ASSY used on 001D			001
-010E	A238101255-000		. . WASHBASIN ASSY used on 001E			001
-010F	A238101255-002		. . WASHBASIN ASSY used on 001F			001
-010G	A238101255-046		. . WASHBASIN ASSY used on 001G			001
-010H	A238101255-052		. . WASHBASIN ASSY used on 001H			001
-010J	A238101255-050		. . WASHBASIN ASSY used on 001J			001

- ITEM NOT ILLUSTRATED

FIG. ITEM	PART NUMBER	AIRLINE STOCK NUMBER	NOMENCLATURE 1234567	EFF CODE	UNITS PER ASSY
-010K	A238101255-018		. . WASHBASIN ASSY used on 001K		001
020A	DCIN122-19-4		. . . FLAP ASSY-WASTE used on 010A, 010B, 010F, 010G, 010J		001
-020B	DCIN122-19-3		. . . FLAP ASSY-WASTE used on 010C, 010D, 010E, 010K		001
-020C	DCIN122-19-17		. . . FLAP ASSY-WASTE used on 010H		001
030A	DCIN123-19-4		. . . . FLAP used on 020A		001
-030B	DCIN123-19-3		. . . . FLAP used on 020B		001
-030C	DCIN123-19-17		. . . . FLAP used on 020C		001
040A	NAS1096-2-4		. . . . SCREW BUY PN NAS1801-08-4 used on 020A, 020B, 020C		003
050A	ASNA0113-48ADL		. . . . WASHER used on 020A, 020B, 020C		003
060A	DCIN112-08		. . . . HINGE ASSY used on 020A, 020B, 020C		001
070A	DCIN112-05		. . . . . HINGE HALF-FLAP used on 060A		001
080A	DCIN112-06		. . . . . HINGE HALF-WASHBASIN used on 060A		001
090A	DCIN112-04		. . . . . AXLE used on 060A		001

- ITEM NOT ILLUSTRATED

FIG. ITEM	PART NUMBER	AIRLINE STOCK NUMBER	NOMENCLATURE 1234567	EFF CODE	UNITS PER ASSY
100A	DCIN112-01		. . . . . SPRING used on 060A		002
110A	DCIN112-07		. . . . . RING-RETAINING used on 060A		002
120A	NAS1096-2-7		. . . SCREW BUY PN NAS1801-08-7 used on 010A, 010B, 010C, 010D, 010E, 010F, 010G, 010H, 010J, 010K		003
130A	ASNA0113-40ADL		. . . WASHER used on 010A, 010B, 010C, 010D, 010E, 010F, 010G, 010H, 010J, 010K		003
140A	ABS0365-08-1		. . . NUT-CLIP BUY PN ABS0365-08-1B used on 010A, 010B, 010C, 010D, 010E, 010F, 010G, 010H, 010J, 010K		003
150A	9855DV		. . . DAMPER used on 010A, 010B, 010C, 010D, 010E, 010F, 010G, 010H, 010J, 010K		001
160A	A438100220-202		. . . BOLT used on 010A, 010B, 010C, 010D, 010E, 010F, 010G, 010H, 010J, 010K		002
170A	A338100308-200		. . . WASHER used on 010A, 010B, 010C, 010D, 010E, 010F, 010G, 010H, 010J, 010K		006

- ITEM NOT ILLUSTRATED

FIG. ITEM	PART NUMBER	AIRLINE STOCK NUMBER	NOMENCLATURE 1234567	EFF CODE	UNITS PER ASSY
180A	DIN94-1-6X32ST		. . . PIN-COTTER BUY PN IS01234-1-6X32S used on 010A, 010B, 010C, 010D, 010E, 010F, 010G, 010H, 010J, 010K		002
190A	NAS1096-2-6		. . SCREW BUY PN NAS1801-08-6 used on 001A, 001B, 001C, 001D, 001E, 001F, 001G, 001H, 001J, 001K, 001L		007
195A	NAS1096-2-7		. . SCREW BUY PN NAS1801-08-7 used on 001A, 001B, 001C, 001D, 001E, 001F, 001G, 001H, 001J, 001K, 001L		004
200A	ASNA0113-40ADL		. . WASHER used on 001A, 001B, 001C, 001D, 001E, 001F, 001G, 001H, 001J, 001K, 001L		009
210A	NAS1149CN832R		. . WASHER used on 001A, 001B, 001C, 001D, 001E, 001F, 001G, 001H, 001J, 001K, 001L		008
215A	NAS1100-3-4		. . SCREW used on 001A, 001B, 001C, 001D, 001E, 001F, 001G, 001H, 001J, 001K, 001L		002
220A	A225400420-008		. . BRACKET-WASHBASIN UNIT used on 001A, 001B, 001C, 001D, 001E, 001F, 001G, 001H, 001J, 001K, 001L		001
-230A	NSA5054-08		. . . INSERT used on 220A		002

- ITEM NOT ILLUSTRATED

FIG. ITEM	PART NUMBER	AIRLINE STOCK NUMBER	NOMENCLATURE 1234567	EFF CODE	UNITS PER ASSY
240A	NAS1096-2-24		. . SCREW BUY PN NAS1801-08-24 used on 001A, 001B, 001C, 001D, 001E, 001F, 001G, 001H, 001J, 001K, 001L		002
250A	A225400420-010		. . ANGLE used on 001A, 001B, 001C, 001D, 001E, 001F, 001G, 001H, 001J, 001K, 001L		002
260A	NAS1068A08		. . . NUT BUY PN MS21075L08 used on 250A		001
270A	NAS1096-2-12		. . SCREW BUY PN NAS1801-08-12 PRE VSB A2-254-25-106 used on 001A, 001B, 001C, 001D, 001E, 001F, 001G, 001H, 001J, 001K		002
-270B	NAS1801-08-10		. . SCREW POST VSB A2-254-25-106 used on 001L		002
280A	NSA5067-08-1		. . NUT used on 001A, 001B, 001C, 001D, 001E, 001F, 001G, 001H, 001J, 001K, 001L		004
290A	DCIN154-002		. . DISPENSER ASSY-LIQUID SOAP PRE VSB A2-254-25-106 used on 001A, 001B, 001C, 001D, 001E, 001F, 001G, 001H, 001J, 001K		001

- ITEM NOT ILLUSTRATED

FIG. ITEM	PART NUMBER	AIRLINE STOCK NUMBER	NOMENCLATURE 1234567	EFF CODE	UNITS PER ASSY
300A	DCIN154-052		. . . HEAD ASSY-LIQUID SOAP DISPENSER,TABLE MOUNTED used on 290A		001
310A	DCIN154-230		. . . . PUMP used on 300A		001
-320A	DCIN154-216		. . . . SEALING SET-LIQUID SOAP DISPENSER used on 300A		001
330A	DCIN154-208		. . . . SEAL used on 300A		001
340A	DCIN154-200		. . . . NUT used on 300A		001
350A	DCIN154-202		. . . NUT-KNURLED used on 290A		001
360A	DCIN154-152		. . . BOTTLE ASSY-LIQUID SOAP DISPENSER used on 290A		001
370A	DCIN154-102		. . . HOSE-LIQUID SOAP DISPENSER used on 290A		001
380A	C00396-23W		. . DISPENSER-HAND LOTION used on 001B		001
-380B	TRBR10UA7		. . DISPENSER-HAND LOTION POST VSB A2-254-25-106 TRBR10UA/7 used on 001L		001
390A	TRB12BCA		. . SUPPORT-LIQUID SOAP DISPENSER used on 001B		001

- ITEM NOT ILLUSTRATED

FIG. ITEM	PART NUMBER	AIRLINE STOCK NUMBER	NOMENCLATURE 1234567	EFF CODE	UNITS PER ASSY
-390B	TRBASE125		. . SUPPORT-LIQUID SOAP DISPENSER POST VSB A2-254-25-106 used on 001L		001
-400A	A338100212-200		. . WASHER POST VSB A2-254-25-106 used on 001L		001

- ITEM NOT ILLUSTRATED

THIS PAGE IS INTENTIONALLY LEFT BLANK

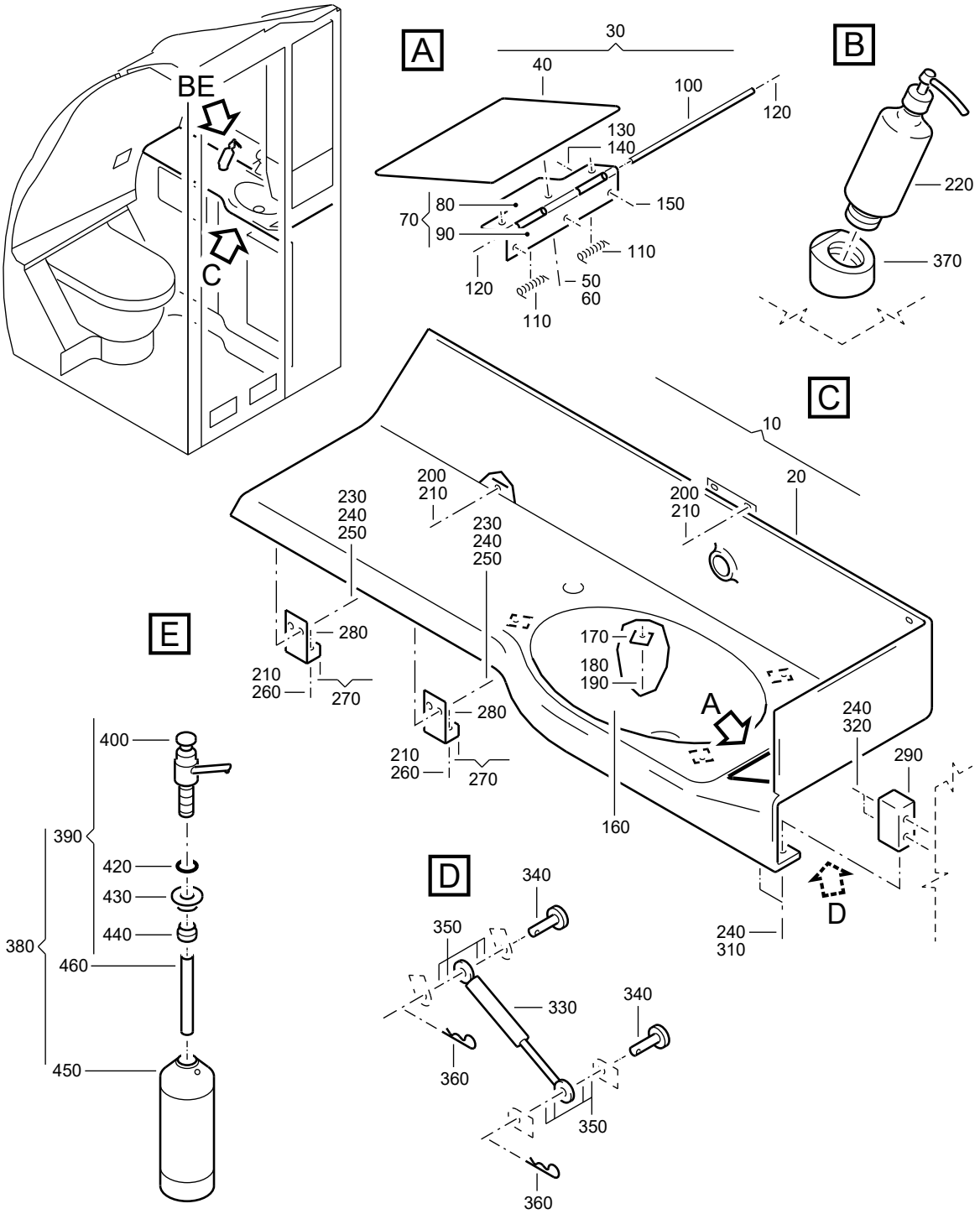

F_PL_254151_15_R_01_00

WASHBASIN UNIT
Figure 15R/EN254151SHEET15R01

FIG. ITEM	PART NUMBER	AIRLINE STOCK NUMBER	NOMENCLATURE 1234567	EFF CODE	UNITS PER ASSY
15R					
-001A	D2549020701874		. WASHBASIN UNIT NP used on 110C (25415142R), 110J (25415142S) SEE 25-41-51-42R FOR NHA SEE 25-41-51-42S FOR NHA		RF
-001B	D2549020414874		. WASHBASIN UNIT NP used on 110D (25415142S) SEE 25-41-51-42S FOR NHA		RF
-001C	D2549020413474		. WASHBASIN UNIT NP used on 110G (25415142P) SEE 25-41-51-42P FOR NHA		RF
010A	A238101258-000		. . WASHBASIN ASSY used on 001A		001
-010B	A238101258-004		. . WASHBASIN ASSY used on 001B		001
-010C	A238101258-002		. . WASHBASIN ASSY used on 001C		001
020A	A238101258-200		. . . WASHBASIN used on 010A		001
-020B	A238101258-204		. . . WASHBASIN used on 010B		001
-020C	A238101258-202		. . . WASHBASIN used on 010C		001
030A	DCIN122-19-4		. . . FLAP ASSY-WASTE used on 010A, 010B, 010C		001
040A	DCIN123-19-4		. . . . FLAP used on 030A		001

- ITEM NOT ILLUSTRATED

FIG. ITEM	PART NUMBER	AIRLINE STOCK NUMBER	NOMENCLATURE 1234567	EFF CODE	UNITS PER ASSY
050A	NAS1096-2-4		. . . . SCREW BUY PN NAS1801-08-4 used on 030A		003
060A	ASNA0113-48ADL		. . . . WASHER used on 030A		003
070A	DCIN112-08		. . . . HINGE ASSY used on 030A		001
080A	DCIN112-05		. . . . . HINGE HALF-FLAP used on 070A		001
090A	DCIN112-06		. . . . . HINGE HALF-WASHBASIN used on 070A		001
100A	DCIN112-04		. . . . . AXLE used on 070A		001
110A	DCIN112-01		. . . . . SPRING used on 070A		002
120A	DCIN112-07		. . . . . RING-RETAINING used on 070A		002
130A	NAS1096-2-7		. . . SCREW BUY PN NAS1801-08-7 used on 010A, 010B, 010C		003
140A	ASNA0113-40ADL		. . . WASHER used on 010A, 010B, 010C		003
150A	ABS0365-08-1		. . . NUT-CLIP BUY PN ABS0365-08-1B used on 010A, 010B, 010C		003
160A	A338100315-501		. . . BOWL-WASHBASIN used on 010A, 010B, 010C		001
170A	A338100314-202		. . . BRACKET used on 010A, 010B, 010C		004

- ITEM NOT ILLUSTRATED

FIG. ITEM	PART NUMBER	AIRLINE STOCK NUMBER	NOMENCLATURE 1234567	EFF CODE	UNITS PER ASSY
180A	NAS1096-2-6		. . . SCREW BUY PN NAS1801-08-6 used on 010A, 010B, 010C		004
190A	ASNA0113-48ADL		. . . WASHER used on 010A, 010B, 010C		004
200A	NAS1096-2-6		. . SCREW BUY PN NAS1801-08-6 used on 001A, 001B, 001C		005
210A	ASNA0113-40ADL		. . WASHER used on 001A, 001B, 001C		007
220A	TRBR10SAL		. . BOTTLE-LIQUID SOAP DISPENSER used on 001A		001
230A	NAS1096-2-7		. . SCREW BUY PN NAS1801-08-7 used on 001A, 001B, 001C		004
240A	NAS1149CN832R		. . WASHER used on 001A, 001B, 001C		008
250A	NSA5067-08-1		. . NUT used on 001A, 001B, 001C		004
260A	NAS1096-2-12		. . SCREW BUY PN NAS1801-08-12 used on 001A, 001B, 001C		002
270A	A225400420-010		. . ANGLE used on 001A, 001B, 001C		002
280A	NAS1068A08		. . . NUT BUY PN MS21075L08 used on 270A		001

- ITEM NOT ILLUSTRATED

FIG. ITEM	PART NUMBER	AIRLINE STOCK NUMBER	NOMENCLATURE 1234567	EFF CODE	UNITS PER ASSY
290A	A225400420-008		. . BRACKET-WASHBASIN UNIT used on 001A, 001B, 001C		001
-300A	NSA5054-08		. . . INSERT used on 290A		002
310A	NAS1100-3-4		. . SCREW used on 001A, 001B, 001C		002
320A	NAS1096-2-24		. . SCREW BUY PN NAS1801-08-24 used on 001A, 001B, 001C		002
330A	9855DV		. . DAMPER used on 001A, 001B, 001C		001
340A	A438100220-202		. . BOLT used on 001A, 001B, 001C		002
350A	A338100308-200		. . WASHER used on 001A, 001B, 001C		008
360A	DIN94-1-6X32ST		. . PIN-COTTER BUY PN IS01234-1-6X32S used on 001A, 001B, 001C		002
370A	TRBASE125		. . SUPPORT-LIQUID SOAP DISPENSER used on 001A		001
380A	DCIN154-002		. . DISPENSER ASSY-LIQUID SOAP used on 001B		001
390A	DCIN154-052		. . . HEAD ASSY-LIQUID SOAP DISPENSER,TABLE MOUNTED used on 380A		001
400A	DCIN154-230		. . . . PUMP used on 390A		001

- ITEM NOT ILLUSTRATED

FIG. ITEM	PART NUMBER	AIRLINE STOCK NUMBER	NOMENCLATURE 1234567	EFF CODE	UNITS PER ASSY
-410A	DCIN154-216		. . . . SEALING SET-LIQUID SOAP DISPENSER used on 390A		001
420A	DCIN154-208		. . . . SEAL used on 390A		001
430A	DCIN154-200		. . . . NUT used on 390A		001
440A	DCIN154-202		. . . NUT-KNURLED used on 380A		001
450A	DCIN154-152		. . . BOTTLE ASSY-LIQUID SOAP DISPENSER used on 380A		001
460A	DCIN154-102		. . . HOSE-LIQUID SOAP DISPENSER used on 380A		001

- ITEM NOT ILLUSTRATED

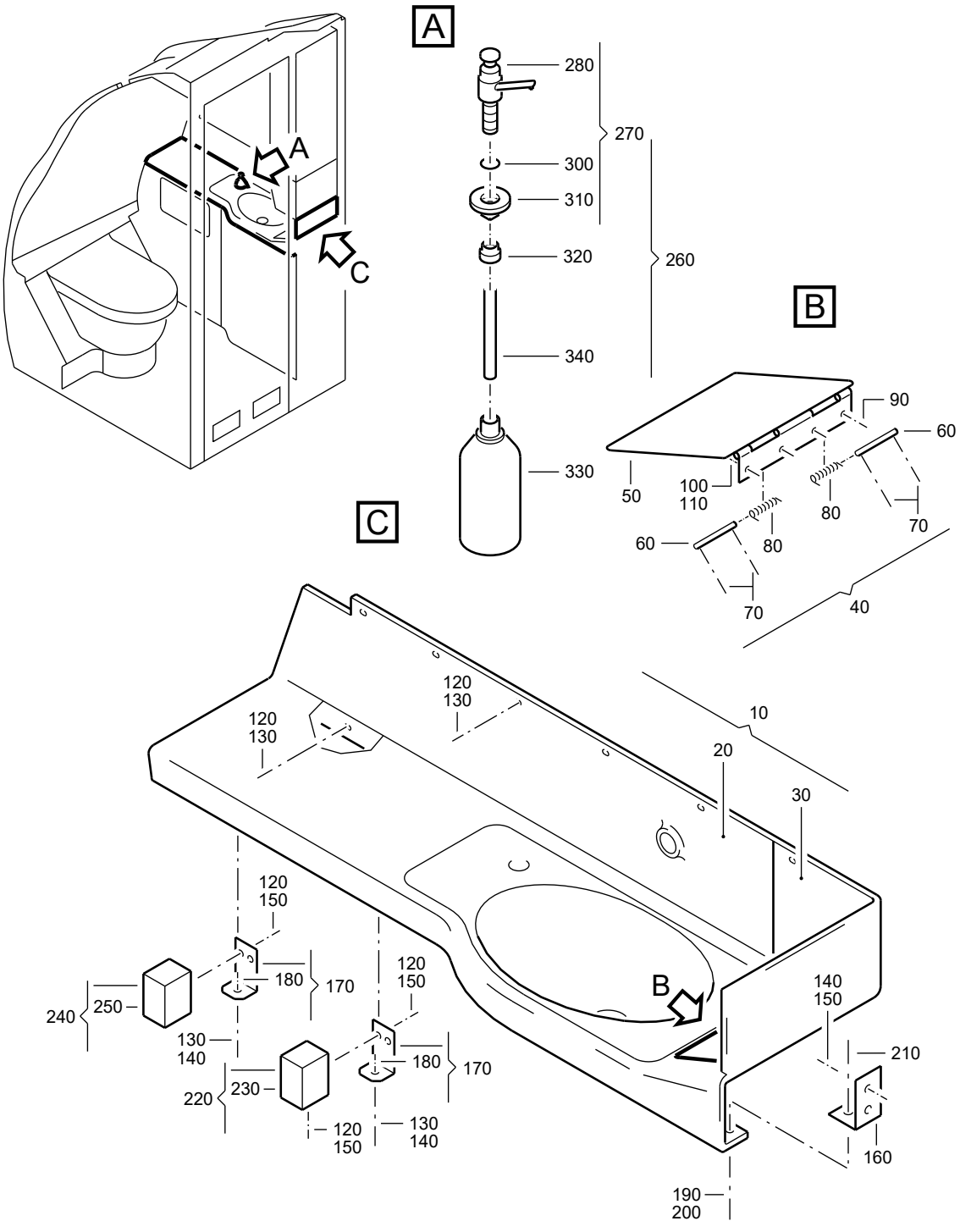

F_PL_254151_15_S_01_00

WASHBASIN UNIT
Figure 15S/EN254151SHEET15S01

FIG. ITEM	PART NUMBER	AIRLINE STOCK NUMBER	NOMENCLATURE 1234567	EFF CODE	UNITS PER ASSY
15S					
-001A	D2549020300674		. WASHBASIN UNIT NP used on 110E (25415142S), 110D (25415142T) SEE 25-41-51-42S FOR NHA SEE 25-41-51-42T FOR NHA		RF
-001B	D2549030704274		. WASHBASIN UNIT NP used on 110H (25415142S) SEE 25-41-51-42S FOR NHA		RF
-001C	D2549030704474		. WASHBASIN UNIT NP used on 110F (25415142T) SEE 25-41-51-42T FOR NHA		RF
010A	537146		. . WASHBASIN ASSY used on 001A		001
-010B	537148		. . WASHBASIN ASSY used on 001B		001
-010C	A238101204-000		. . WASHBASIN ASSY used on 001C		001
020A	537163		. . . COVER-REAR used on 010A, 010B		001
-020B	537008		. . . COVER-REAR used on 010C		001
030A	537165		. . . WASHBASIN used on 010A		001
-030B	537167		. . . WASHBASIN used on 010B, 010C		001
040A	0333163		. . . . FLAP ASSY used on 030A, 030B		001
050A	0242976		. . . . . FLAP used on 040A		001

- ITEM NOT ILLUSTRATED

FIG. ITEM	PART NUMBER	AIRLINE STOCK NUMBER	NOMENCLATURE 1234567	EFF CODE	UNITS PER ASSY
060A	0234912		. . . . . PIN used on 040A		002
070A	0083636		. . . . . SPLINT used on 040A		004
080A	0234913		. . . . . SPRING used on 040A		002
090A	NAS1096-2-6		. . . . SCREW BUY PN NAS1801-08-6 used on 030A, 030B		004
100A	NAS1149CN832R		. . . . WASHER used on 030A, 030B		004
110A	NSA5067-08-1		. . . . NUT used on 030A, 030B		004
120A	NAS1096-2-6		. . SCREW BUY PN NAS1801-08-6 used on 001A, 001B, 001C		014
130A	ASNA0113-40ADL		. . WASHER used on 001A, 001B, 001C		011
140A	NAS1096-2-7		. . SCREW BUY PN NAS1801-08-7 used on 001A, 001B, 001C		006
150A	NAS1149CN832R		. . WASHER used on 001A, 001B, 001C		007
160A	A238100306-202		. . BRACKET-WASHBASIN used on 001A, 001B, 001C		001
170A	A225400420-010		. . ANGLE used on 001A, 001B, 001C		002

- ITEM NOT ILLUSTRATED

FIG. ITEM	PART NUMBER	AIRLINE STOCK NUMBER	NOMENCLATURE 1234567	EFF CODE	UNITS PER ASSY
180A	NAS1068A08		. . . NUT BUY PN MS21075L08 used on 170A		002
190A	NAS1096-2-8		. . SCREW BUY PN NAS1801-08-8 used on 001A, 001B, 001C		001
200A	NAS1149C0363R		. . WASHER used on 001A, 001B, 001C		002
210A	NSA5067-08-1		. . NUT used on 001A, 001B, 001C		001
220A	A225400420-012		. . BRACKET used on 001A, 001B, 001C		001
230A	NSA5345-08C		. . . INSERT used on 220A		003
240A	A225400420-014		. . BRACKET used on 001A, 001B, 001C		001
250A	NSA5345-08C		. . . INSERT used on 240A		002
260A	DCIN154-002		. . DISPENSER ASSY-LIQUID SOAP used on 001A, 001B, 001C		001
270A	DCIN154-052		. . . HEAD ASSY-LIQUID SOAP DISPENSER,TABLE MOUNTED used on 260A		001
280A	DCIN154-230		. . . . PUMP used on 270A		001
-290A	DCIN154-216		. . . . SEALING SET-LIQUID SOAP DISPENSER used on 270A		001

- ITEM NOT ILLUSTRATED

FIG. ITEM	PART NUMBER	AIRLINE STOCK NUMBER	NOMENCLATURE 1234567	EFF CODE	UNITS PER ASSY
300A	DCIN154-208		. . . . SEAL used on 270A		001
310A	DCIN154-200		. . . . NUT used on 270A		001
320A	DCIN154-202		. . . NUT-KNURLED used on 260A		001
330A	DCIN154-152		. . . BOTTLE ASSY-LIQUID SOAP DISPENSER used on 260A		001
340A	DCIN154-102		. . . HOSE-LIQUID SOAP DISPENSER used on 260A		001

- ITEM NOT ILLUSTRATED

THIS PAGE IS INTENTIONALLY LEFT BLANK

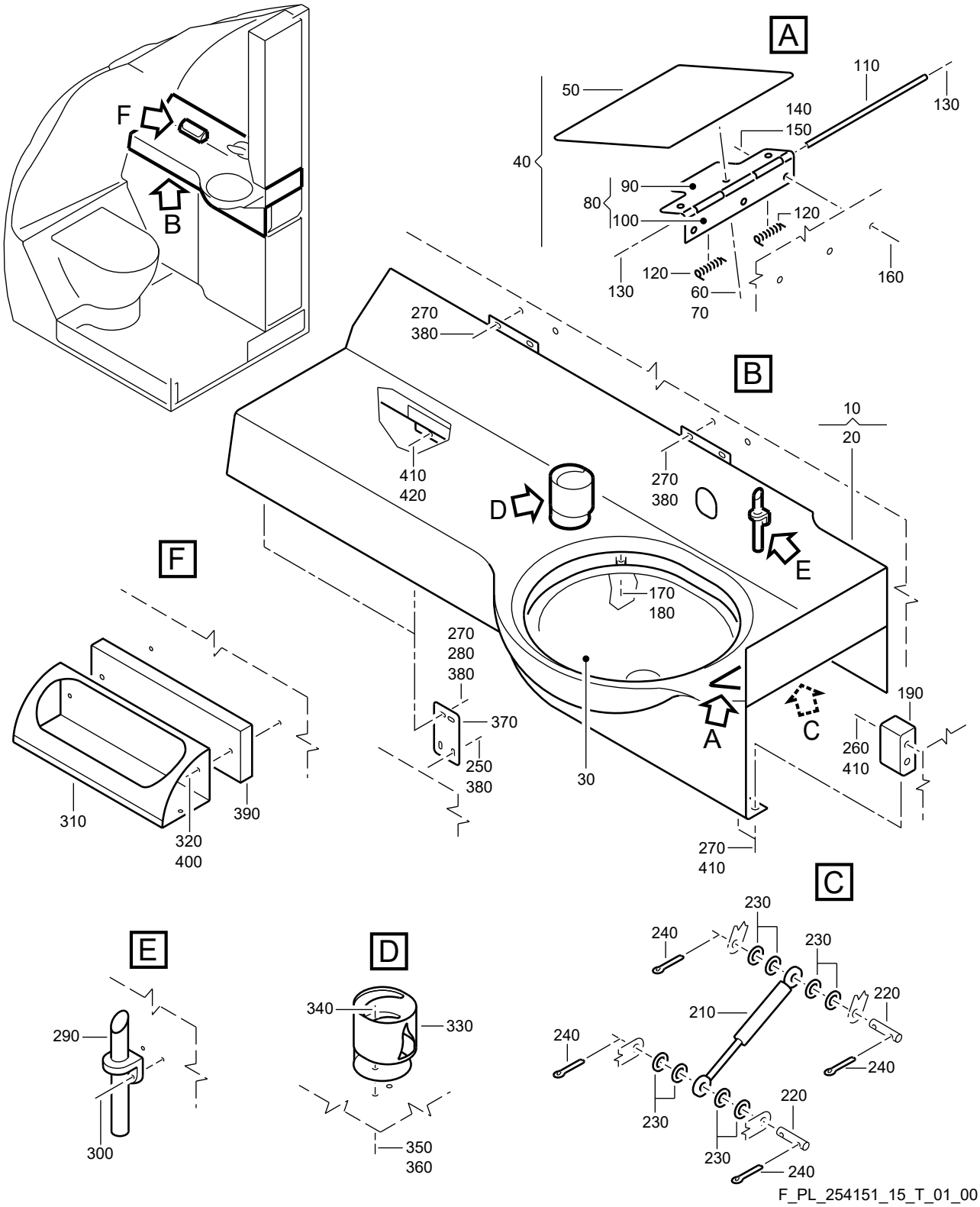

WASHBASIN UNIT
Figure 15T/EN254151SHEET15T01

FIG. ITEM	PART NUMBER	AIRLINE STOCK NUMBER	NOMENCLATURE 1234567	EFF CODE	UNITS PER ASSY
15T					
-001A	D2547161202874		. WASHBASIN UNIT NP POST SB 25-1674 used on 110J (25415141M) SEE 25-41-51-41M FOR NHA		RF
010A	A238101257-000		. . WASHBASIN ASSY POST SB 25-1674 used on 001A		001
020A	A238101257-200		. . . WASHBASIN used on 010A		001
030A	DCIN151-60-9-18		. . . BOWL-WASHBASIN UNIT used on 010A		001
040A	DCIN122-19-4		. . . FLAP ASSY-WASTE used on 010A		001
050A	DCIN123-19-4		. . . . FLAP used on 040A		001
060A	NAS1096-2-4		. . . . SCREW BUY PN NAS1801-08-4 used on 040A		003
070A	ASNA0113-48ADL		. . . . WASHER used on 040A		003
080A	DCIN112-08		. . . . HINGE ASSY used on 040A		001
090A	DCIN112-05		. . . . . HINGE HALF-FLAP used on 080A		001
100A	DCIN112-06		. . . . . HINGE HALF-WASHBASIN used on 080A		001
110A	DCIN112-04		. . . . . AXLE used on 080A		001

- ITEM NOT ILLUSTRATED

FIG. ITEM	PART NUMBER	AIRLINE STOCK NUMBER	NOMENCLATURE 1234567	EFF CODE	UNITS PER ASSY
120A	DCIN112-01		. . . . . SPRING used on 080A		002
130A	DCIN112-07		. . . . . RING-RETAINING used on 080A		002
140A	NAS1801-08-7		. . . SCREW used on 010A		003
150A	ASNA0113-40ADL		. . . WASHER used on 010A		003
160A	ABS0365-08-1		. . . NUT-CLIP BUY PN ABS0365-08-1B used on 010A		003
170A	NAS1801-08-6		. . . SCREW used on 010A		004
180A	ASNA0113-48ADL		. . . WASHER used on 010A		004
190A	A225400420-008		. . BRACKET-WASHBASIN UNIT used on 001A		001
-200A	NSA5054-08		. . . INSERT used on 190A		002
210A	9855DV		. . DAMPER used on 001A		001
220A	A338100311-200		. . BOLT used on 001A		002
230A	A338100308-200		. . WASHER used on 001A		008
240A	AN415-5		. . PIN-LOCK BUY PN AA55487-5 used on 001A		004

- ITEM NOT ILLUSTRATED

FIG. ITEM	PART NUMBER	AIRLINE STOCK NUMBER	NOMENCLATURE 1234567	EFF CODE	UNITS PER ASSY
250A	NAS1801-08-6		. . SCREW POST SB 25-1674 used on 001A		004
260A	NAS1801-08-24		. . SCREW POST SB 25-1674 used on 001A		002
270A	NAS1801-08-5		. . SCREW POST SB 25-1674 used on 001A		010
280A	NSA5067-08-1		. . NUT POST SB 25-1674 used on 001A		004
290A	1245-02		. . VASE POST SB 25-1674 used on 001A		001
300A	NAS514P632-9		. . SCREW POST SB 25-1674 used on 001A		002
310A	1240-111		. . HOLDER-COSMETICS POST SB 25-1674 used on 001A		001
320A	NAS514P832-14		. . SCREW POST SB 25-1674 used on 001A		002
330A	1240-101		. . HOLDER,SOAP-DISPENSER POST SB 25-1674 used on 001A		001
340A	NAS1102-3-14		. . SCREW POST SB 25-1674 used on 001A		002

- ITEM NOT ILLUSTRATED

FIG. ITEM	PART NUMBER	AIRLINE STOCK NUMBER	NOMENCLATURE 1234567	EFF CODE	UNITS PER ASSY
350A	NAS1149C0332R		. . WASHER POST SB 25-1674 used on 001A		002
360A	MS21042-3		. . NUT POST SB 25-1674 used on 001A		002
370A	A225400420-250		. . FITTING POST SB 25-1674 used on 001A		002
380A	ASNA0113-40ADL		. . WASHER POST SB 25-1674 used on 001A		012
390A	A438100255-206		. . SPACER POST SB 25-1674 used on 001A		001
400A	0-123-000700000		. . WASHER POST SB 25-1674 used on 001A		002
410A	NAS1149CN832R		. . WASHER POST SB 25-1674 used on 001A		010
420A	NAS1801-08-9		. . SCREW POST SB 25-1674 used on 001A		006

- ITEM NOT ILLUSTRATED

THIS PAGE IS INTENTIONALLY LEFT BLANK

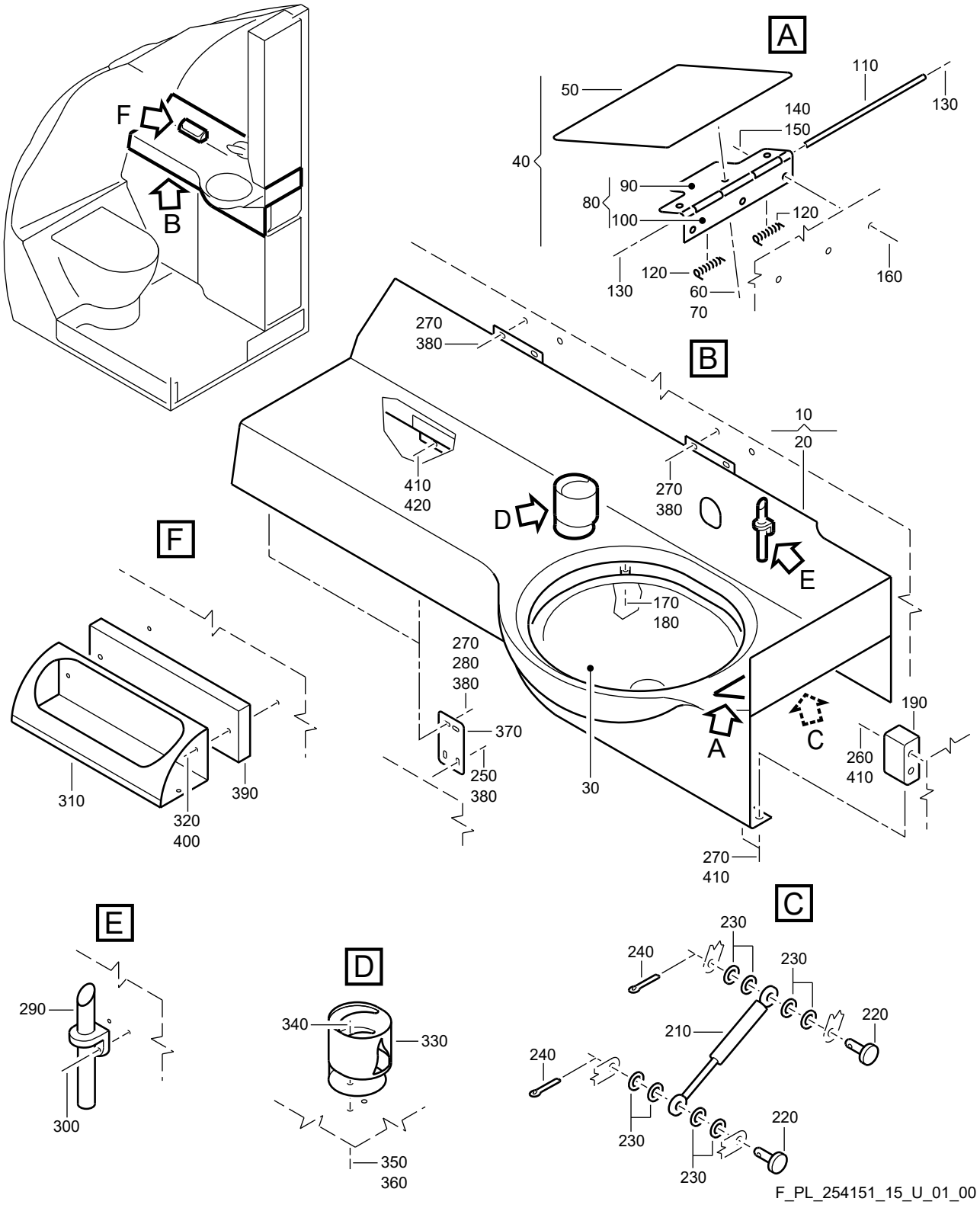

WASHBASIN UNIT
Figure 15U/EN254151SHEET15U01

FIG. ITEM	PART NUMBER	AIRLINE STOCK NUMBER	NOMENCLATURE 1234567	EFF CODE	UNITS PER ASSY
15U					
-001A	D2547161203474		. WASHBASIN UNIT NP POST SB 25-1674 used on 110K (25415142N) SEE 25-41-51-42N FOR NHA		RF
010A	A238101257-000		. . WASHBASIN ASSY POST SB 25-1674 used on 001A		001
020A	A238101257-200		. . . WASHBASIN used on 010A		001
030A	DCIN151-60-9-18		. . . BOWL-WASHBASIN UNIT used on 010A		001
040A	DCIN122-19-4		. . . FLAP ASSY-WASTE used on 010A		001
050A	DCIN123-19-4		. . . . FLAP used on 040A		001
060A	NAS1096-2-4		. . . . SCREW BUY PN NAS1801-08-4 used on 040A		003
070A	ASNA0113-48ADL		. . . . WASHER used on 040A		003
080A	DCIN112-08		. . . . HINGE ASSY used on 040A		001
090A	DCIN112-05		. . . . . HINGE HALF-FLAP used on 080A		001
100A	DCIN112-06		. . . . . HINGE HALF-WASHBASIN used on 080A		001
110A	DCIN112-04		. . . . . AXLE used on 080A		001

- ITEM NOT ILLUSTRATED

FIG. ITEM	PART NUMBER	AIRLINE STOCK NUMBER	NOMENCLATURE 1234567	EFF CODE	UNITS PER ASSY
120A	DCIN112-01		. . . . . SPRING used on 080A		002
130A	DCIN112-07		. . . . . RING-RETAINING used on 080A		002
140A	NAS1801-08-7		. . . SCREW used on 010A		003
150A	ASNA0113-40ADL		. . . WASHER used on 010A		003
160A	ABS0365-08-1		. . . NUT-CLIP BUY PN ABS0365-08-1B used on 010A		003
170A	NAS1801-08-6		. . . SCREW used on 010A		004
180A	ASNA0113-48ADL		. . . WASHER used on 010A		004
190A	A225400420-008		. . BRACKET-WASHBASIN UNIT used on 001A		001
-200A	NSA5054-08		. . . INSERT used on 190A		002
210A	9855DV		. . DAMPER used on 001A		001
220A	A438100220-202		. . BOLT used on 001A		002
230A	A338100308-200		. . WASHER used on 001A		008
240A	DIN94-1-6X32ST		. . PIN-COTTER BUY PN IS01234-1-6X32S used on 001A		002

- ITEM NOT ILLUSTRATED

FIG. ITEM	PART NUMBER	AIRLINE STOCK NUMBER	NOMENCLATURE 1234567	EFF CODE	UNITS PER ASSY
250A	NAS1801-08-6		. . SCREW POST SB 25-1674 used on 001A		004
260A	NAS1801-08-24		. . SCREW POST SB 25-1674 used on 001A		002
270A	NAS1801-08-5		. . SCREW POST SB 25-1674 used on 001A		010
280A	NSA5067-08-1		. . NUT POST SB 25-1674 used on 001A		004
290A	1245-02		. . VASE POST SB 25-1674 used on 001A		001
300A	NAS514P632-9		. . SCREW POST SB 25-1674 used on 001A		002
310A	1240-111		. . HOLDER-COSMETICS POST SB 25-1674 used on 001A		001
320A	NAS514P832-14		. . SCREW POST SB 25-1674 used on 001A		002
330A	1240-101		. . HOLDER,SOAP-DISPENSER POST SB 25-1674 used on 001A		001
340A	NAS1102-3-14		. . SCREW POST SB 25-1674 used on 001A		002

- ITEM NOT ILLUSTRATED

FIG. ITEM	PART NUMBER	AIRLINE STOCK NUMBER	NOMENCLATURE 1234567	EFF CODE	UNITS PER ASSY
350A	NAS1149C0332R		. . WASHER POST SB 25-1674 used on 001A		002
360A	MS21042-3		. . NUT POST SB 25-1674 used on 001A		002
370A	A225400420-250		. . FITTING POST SB 25-1674 used on 001A		002
380A	ASNA0113-40ADL		. . WASHER POST SB 25-1674 used on 001A		012
390A	A438100255-206		. . SPACER POST SB 25-1674 used on 001A		001
400A	0-123-000700000		. . WASHER POST SB 25-1674 used on 001A		002
410A	NAS1149CN832R		. . WASHER POST SB 25-1674 used on 001A		010
420A	NAS1801-08-9		. . SCREW POST SB 25-1674 used on 001A		006

- ITEM NOT ILLUSTRATED

THIS PAGE IS INTENTIONALLY LEFT BLANK

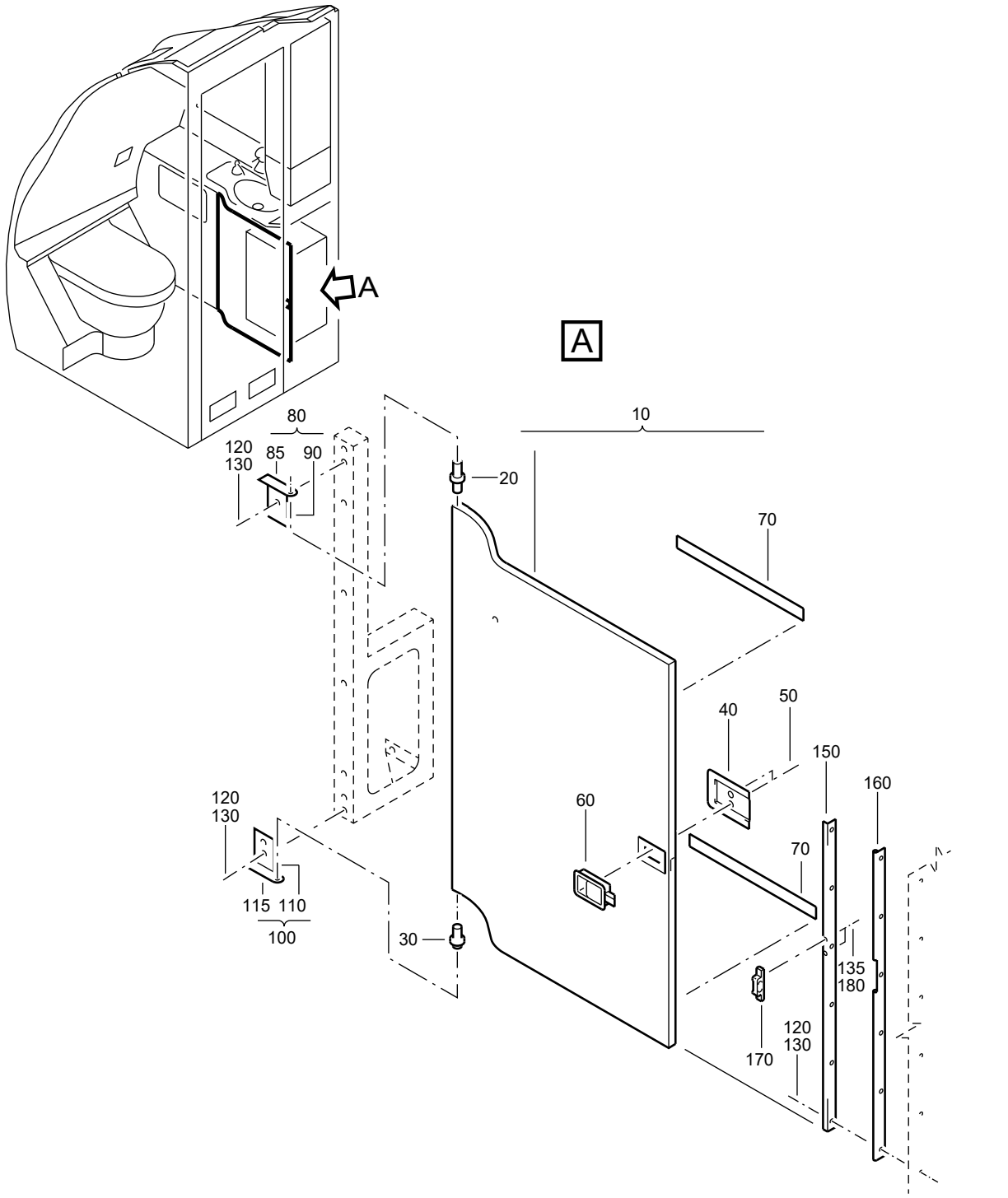

F_PL_254151_16_0_01_00

DOOR ASSY-WASHBASIN UNIT
Figure 16/EN254151SHEET16001

FIG. ITEM	PART NUMBER	AIRLINE STOCK NUMBER	NOMENCLATURE 1234567		EFF CODE	UNITS PER ASSY
16						
-001A	D2549010500075		. DOOR ASSY-WASHBASIN UNIT used on 120A (254151010), 120B (25415101A), 120B(25415101B), 120B (25415101C), 120A (25415101E) SEE 25-41-51-010 FOR NHA SEE 25-41-51-01A FOR NHA SEE 25-41-51-01B FOR NHA SEE 25-41-51-01C FOR NHA SEE 25-41-51-01E FOR NHA	NP		RF
-001B	D2549020500075		. DOOR ASSY-WASHBASIN UNIT used on 120B (254151010), 120E (25415101A), 120E(25415101B), 120D (25415101D), 120C (25415101E), 120C(25415101F) SEE 25-41-51-010 FOR NHA SEE 25-41-51-01A FOR NHA SEE 25-41-51-01B FOR NHA SEE 25-41-51-01D FOR NHA SEE 25-41-51-01E FOR NHA SEE 25-41-51-01F FOR NHA	NP		RF
-001C	D2549020500275		. DOOR ASSY-WASHBASIN UNIT used on 120C (254151010), 120A (25415101B), 120E(25415141T) SEE 25-41-51-010 FOR NHA SEE 25-41-51-01B FOR NHA SEE 25-41-51-41T FOR NHA	NP		RF

- ITEM NOT ILLUSTRATED

FIG. ITEM	PART NUMBER	AIRLINE STOCK NUMBER	NOMENCLATURE 1234567	EFF CODE	UNITS PER ASSY
-001D	D2549010500475		. DOOR ASSY-WASHBASIN UNIT NP used on 120D (254151010), 120A (25415101A), 120C(25415101B), 120E (25415101C), 120C (25415101D), 120B(25415101E), 120E (25415101F), 120G (25415101G), 120B(25415101H), 120G (25415101K), 120D (25415141T) SEE 25-41-51-010 FOR NHA SEE 25-41-51-01A FOR NHA SEE 25-41-51-01B FOR NHA SEE 25-41-51-01C FOR NHA SEE 25-41-51-01D FOR NHA SEE 25-41-51-01E FOR NHA SEE 25-41-51-01F FOR NHA SEE 25-41-51-01G FOR NHA SEE 25-41-51-01H FOR NHA SEE 25-41-51-01K FOR NHA SEE 25-41-51-41T FOR NHA		RF
-001E	D2549010501875		. DOOR ASSY-WASHBASIN UNIT NP used on 120C (25415101A), 120A (25415101C), 120A (25415101D), 120E (25415101E), 120B (25415101F) SEE 25-41-51-01A FOR NHA SEE 25-41-51-01C FOR NHA SEE 25-41-51-01D FOR NHA SEE 25-41-51-01E FOR NHA SEE 25-41-51-01F FOR NHA		RF

- ITEM NOT ILLUSTRATED

FIG. ITEM	PART NUMBER	AIRLINE STOCK NUMBER	NOMENCLATURE 1234567	EFF CODE	UNITS PER ASSY
-001F	D2549010502275		. DOOR ASSY-WASHBASIN UNIT NP used on 120D (25415101A), 120D (25415101B), 120D (25415101C), 120B (25415101D), 120D (25415101E), 120D(25415101F), 120H (25415101G), 120D (25415101H), 120H(25415101K), 120F (25415101N) SEE 25-41-51-01A FOR NHA SEE 25-41-51-01B FOR NHA SEE 25-41-51-01C FOR NHA SEE 25-41-51-01D FOR NHA SEE 25-41-51-01E FOR NHA SEE 25-41-51-01F FOR NHA SEE 25-41-51-01G FOR NHA SEE 25-41-51-01H FOR NHA SEE 25-41-51-01K FOR NHA SEE 25-41-51-01N FOR NHA		RF
-001G	D2549010504275		. DOOR ASSY-WASHBASIN UNIT NP used on 120C (25415101C) SEE 25-41-51-01C FOR NHA		RF
-001H	D2549020600475		. DOOR ASSY-WASHBASIN UNIT NP used on 120G (254151410) SEE 25-41-51-410 FOR NHA		RF
-001J	D2549020601275		. DOOR ASSY-WASHBASIN UNIT NP used on 120F (25415101E), 120G (25415101L) SEE 25-41-51-01E FOR NHA SEE 25-41-51-01L FOR NHA		RF

- ITEM NOT ILLUSTRATED

FIG. ITEM	PART NUMBER	AIRLINE STOCK NUMBER	NOMENCLATURE 1234567	EFF CODE	UNITS PER ASSY
-001K	D2549020601475		. DOOR ASSY-WASHBASIN UNIT NP used on 120G (25415101E), 120A (25415101F), 120G (25415101H), 120F (25415101K), 120E (25415101M) SEE 25-41-51-01E FOR NHA SEE 25-41-51-01F FOR NHA SEE 25-41-51-01H FOR NHA SEE 25-41-51-01K FOR NHA SEE 25-41-51-01M FOR NHA		RF
-001L	D2549010508075		. DOOR ASSY-WASHBASIN UNIT NP used on 120A (25415101G) SEE 25-41-51-01G FOR NHA		RF
-001M	D2549020602875		. DOOR ASSY-WASHBASIN UNIT NP used on 120C (25415101G) SEE 25-41-51-01G FOR NHA		RF
-001N	D2547160005675		. DOOR ASSY-WASHBASIN UNIT NP POST SB 25-1574 used on 120F (25415141G) SEE 25-41-51-41G FOR NHA		RF
010A	A225400429-500		. . DOOR ASSY-WASHBASIN UNIT used on 001A		001
-010B	A225400429-504		. . DOOR ASSY-WASHBASIN UNIT used on 001B, 001M		001
-010C	A225400429-506		. . DOOR ASSY-WASHBASIN UNIT used on 001C		001

- ITEM NOT ILLUSTRATED

FIG. ITEM	PART NUMBER	AIRLINE STOCK NUMBER	NOMENCLATURE 1234567	EFF CODE	UNITS PER ASSY
-010D	A225400429-502		. . DOOR ASSY-WASHBASIN UNIT used on 001D		001
-010E	A225400429-510		. . DOOR ASSY-WASHBASIN UNIT used on 001E		001
-010F	A225400429-512		. . DOOR ASSY-WASHBASIN UNIT used on 001F		001
-010G	A225400429-514		. . DOOR ASSY-WASHBASIN UNIT used on 001G		001
-010H	A225400429-516		. . DOOR ASSY-WASHBASIN UNIT used on 001H		001
-010J	A225400429-522		. . DOOR ASSY-WASHBASIN UNIT used on 001J		001
-010K	A225400429-524		. . DOOR ASSY-WASHBASIN UNIT used on 001K		001
-010L	A225400429-526		. . DOOR ASSY-WASHBASIN UNIT used on 001L		001
-010M	A225400429-578		. . DOOR ASSY-WASHBASIN UNIT used on 001N		001
020A	A225400427-200		. . . PIN-ATTACH used on 010A, 010B, 010C, 010D, 010E, 010F, 010G, 010H, 010J, 010K, 010L, 010M		001

- ITEM NOT ILLUSTRATED

FIG. ITEM	PART NUMBER	AIRLINE STOCK NUMBER	NOMENCLATURE 1234567	EFF CODE	UNITS PER ASSY
030A	A225400427-202		. . . PIN-ATTACH used on 010A, 010B, 010C, 010D, 010E, 010F, 010G, 010H, 010J, 010K, 010L, 010M		001
040A	A225400432-204		. . . PLATE-MOUNTING used on 010A, 010B, 010C, 010D, 010E, 010F, 010G, 010H, 010J, 010K, 010L, 010M		001
050A	NAS514P632-5		. . . SCREW used on 010A, 010B, 010C, 010D, 010E, 010F, 010G, 010H, 010J, 010K, 010L, 010M		002
060A	AR138-5-2		. . . LATCH ASSY used on 010A, 010B, 010C, 010D, 010E, 010F, 010G, 010H, 010J, 010K, 010L, 010M		001
070A	0-112-0013-2000		. . . STRIP-SLIDING USE AS REQUIRED used on 010A, 010B, 010C, 010D, 010E, 010F, 010G, 010H, 010J, 010K, 010L, 010M		AR
-075A	NAS1833C08-370		. . . INSERT used on 010A, 010B, 010C, 010D, 010E, 010F, 010G, 010H, 010J, 010K, 010L, 010M		001
080A	A225400426-000		. . ANGLE ASSY-MOUNTING used on 001A, 001B, 001C, 001D, 001E, 001F, 001G, 001H, 001J, 001K, 001L, 001M, 001N		001
085A	A225400426-200		. . . ANGLE-MOUNTING used on 080A		001

- ITEM NOT ILLUSTRATED

FIG. ITEM	PART NUMBER	AIRLINE STOCK NUMBER	NOMENCLATURE 1234567	EFF CODE	UNITS PER ASSY
090A	A225400427-204		. . . BUSHING used on 080A		001
100A	A225400426-002		. . ANGLE ASSY-MOUNTING used on 001A, 001B, 001C, 001D, 001E, 001F, 001G, 001H, 001J, 001K, 001L, 001M, 001N		001
110A	A225400427-206		. . . BUSHING used on 100A		001
115A	A225400426-202		. . . ANGLE-MOUNTING used on 100A		001
120A	NAS1096-2-5		. . SCREW BUY PN NAS1801-08-5 used on 001A, 001B, 001C, 001D, 001E, 001F, 001G, 001H, 001J, 001K, 001L, 001M, 001N		010
130A	AN960C8		. . WASHER USE AS REQUIRED BUY PN NAS1149CN832R used on 001A, 001B, 001C, 001D, 001E, 001F, 001G, 001H, 001J, 001K, 001L		AR
-130B	NAS1149CN832R		. . WASHER USE AS REQUIRED used on 001M		AR
135A	AN960C6		. . WASHER BUY PN NAS1149CN632R used on 001A, 001B, 001C, 001D, 001E, 001F, 001G, 001H, 001J, 001K, 001L		002
-135B	NAS1149CN632R		. . WASHER used on 001M		002

- ITEM NOT ILLUSTRATED

FIG. ITEM	PART NUMBER	AIRLINE STOCK NUMBER	NOMENCLATURE 1234567	EFF CODE	UNITS PER ASSY
150A	A225400428-200		. . ANGLE used on 001A, 001B, 001C, 001D, 001E, 001F, 001G, 001H, 001J, 001K, 001L, 001M, 001N		001
160A	A225400431-200		. . SECTION-SEALING used on 001A, 001B, 001C, 001D, 001E, 001F, 001G, 001H, 001J, 001K, 001L, 001M, 001N		001
170A	5L0033400205000		. . INSERT-LOCK used on 001A, 001B, 001C, 001D, 001E, 001F, 001G, 001H, 001J, 001K, 001L, 001M, 001N		001
180A	NAS1100-06-5		. . SCREW used on 001A, 001B, 001C, 001D, 001E, 001F, 001G, 001H, 001J, 001K, 001L, 001M, 001N		002

- ITEM NOT ILLUSTRATED

THIS PAGE IS INTENTIONALLY LEFT BLANK

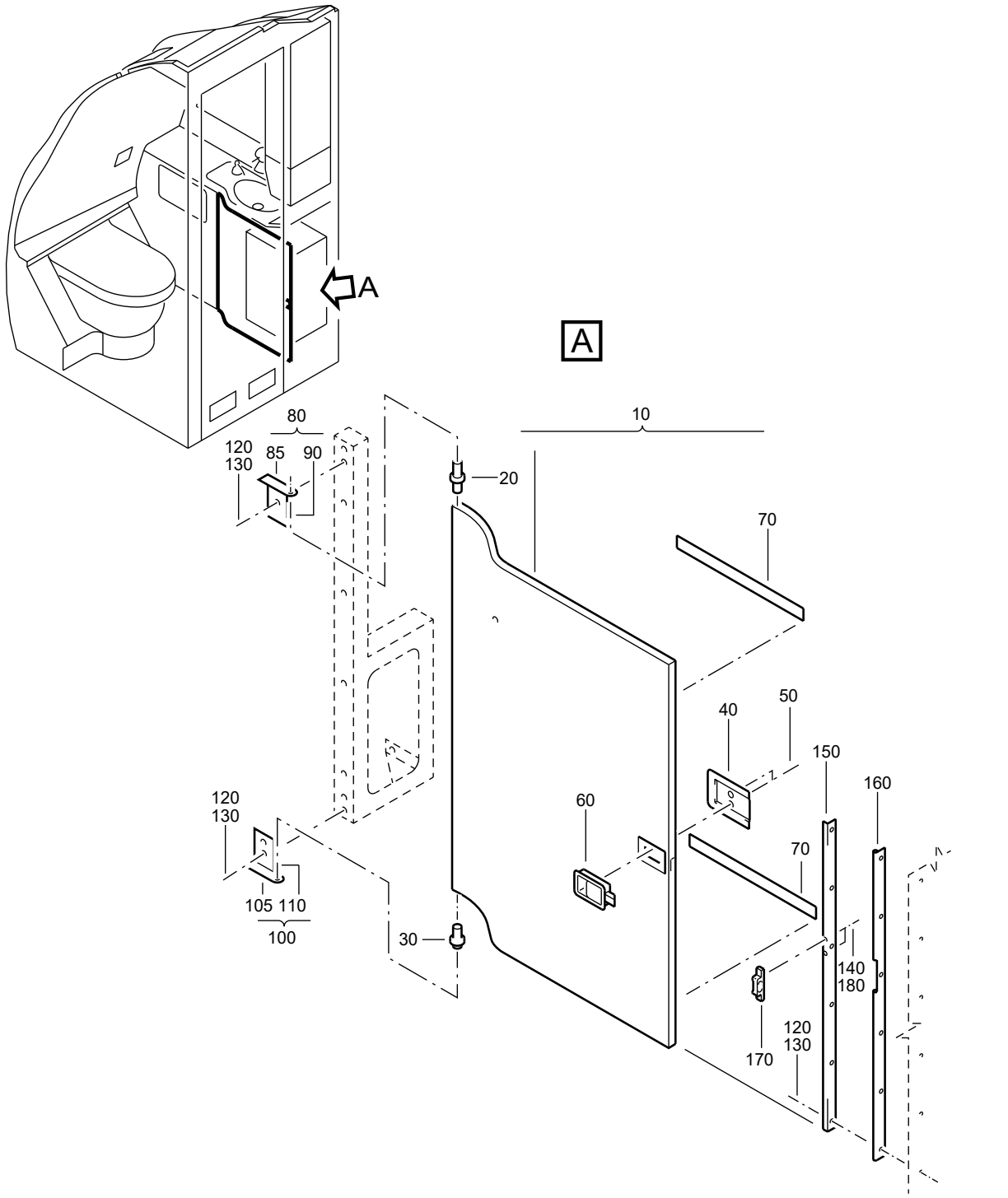

F_PL_254151_16_A_01_00

DOOR ASSY-WASHBASIN UNIT
Figure 16A/EN254151SHEET16A01

FIG. ITEM	PART NUMBER	AIRLINE STOCK NUMBER	NOMENCLATURE 1234567		EFF CODE	UNITS PER ASSY
16A						
-001A	D2549020602675		. DOOR ASSY-WASHBASIN UNIT used on 120B (25415101G), 120F (25415101H) SEE 25-41-51-01G FOR NHA SEE 25-41-51-01H FOR NHA	NP		RF
-001B	D2549020603075		. DOOR ASSY-WASHBASIN UNIT used on 120D (25415101G), 120A (25415101H), 120F (25415101L), 120B (25415141B) PRE VSB A2-254-25-032 SEE 25-41-51-01G FOR NHA SEE 25-41-51-01H FOR NHA SEE 25-41-51-01L FOR NHA SEE 25-41-51-41B FOR NHA	NP		RF
-001C	D2549020603475		. DOOR ASSY-WASHBASIN UNIT used on 120E (25415101G), 120C (25415101H) SEE 25-41-51-01G FOR NHA SEE 25-41-51-01H FOR NHA	NP		RF
-001D	D2549010509075		. DOOR ASSY-WASHBASIN UNIT used on 120F (25415101G), 120E (25415101H), 120B (25415101J) SEE 25-41-51-01G FOR NHA SEE 25-41-51-01H FOR NHA SEE 25-41-51-01J FOR NHA	NP		RF
-001E	D2549020603875		. DOOR ASSY-WASHBASIN UNIT used on 120J (25415101G) SEE 25-41-51-01G FOR NHA	NP		RF

- ITEM NOT ILLUSTRATED

FIG. ITEM	PART NUMBER	AIRLINE STOCK NUMBER	NOMENCLATURE 1234567	EFF CODE	UNITS PER ASSY
-001F	D2549020603075		. DOOR ASSY-WASHBASIN UNIT NP used on 120H (25415101H), 120H (25415101L) POST VSB A2-254-25-032 SEE 25-41-51-01H FOR NHA SEE 25-41-51-01L FOR NHA		RF
010A	A225400429-528		. . DOOR ASSY-WASHBASIN UNIT used on 001A		001
-010B	A225400429-512		. . DOOR ASSY-WASHBASIN UNIT used on 001B, 001F		001
-010C	A225400429-524		. . DOOR ASSY-WASHBASIN UNIT used on 001C		001
-010D	A225400429-502		. . DOOR ASSY-WASHBASIN UNIT used on 001D		001
-010E	A225400429-510		. . DOOR ASSY-WASHBASIN UNIT used on 001E		001
020A	A225400427-200		. . . PIN-ATTACH used on 010A, 010B, 010C, 010D, 010E		001
030A	A225400427-202		. . . PIN-ATTACH used on 010A, 010B, 010C, 010D, 010E		001
040A	A225400432-204		. . . PLATE-MOUNTING used on 010A, 010B, 010C, 010D, 010E		001

- ITEM NOT ILLUSTRATED

FIG. ITEM	PART NUMBER	AIRLINE STOCK NUMBER	NOMENCLATURE 1234567	EFF CODE	UNITS PER ASSY
050A	NAS514P632-5		. . . SCREW used on 010A, 010B, 010C, 010D, 010E		002
060A	AR138-5-2		. . . LATCH ASSY used on 010A, 010B, 010C, 010D, 010E		001
070A	0-112-0013-2000		. . . STRIP-SLIDING USE AS REQUIRED used on 010A, 010B, 010C, 010D, 010E		AR
080A	A225400426-000		. . ANGLE ASSY-MOUNTING used on 001A, 001B, 001C, 001D, 001E, 001F		001
085A	A225400426-200		. . . ANGLE-MOUNTING used on 080A		001
090A	A225400427-204		. . . BUSHING used on 080A		001
100A	A225400426-002		. . ANGLE ASSY-MOUNTING used on 001A, 001B, 001C, 001D, 001E, 001F		001
105A	A225400426-202		. . . ANGLE-MOUNTING used on 100A		001
110A	A225400427-206		. . . BUSHING used on 100A		001
120A	NAS1096-2-5		. . SCREW BUY PN NAS1801-08-5 PRE VSB A2-254-25-032 used on 001A, 001B, 001C, 001D, 001E		010

- ITEM NOT ILLUSTRATED

FIG. ITEM	PART NUMBER	AIRLINE STOCK NUMBER	NOMENCLATURE 1234567	EFF CODE	UNITS PER ASSY
-120B	NAS1096-2-5		. . SCREW POST VSB A2-254-25-032 used on 001F		008
-122A	NAS1801-08-5		. . SCREW POST VSB A2-254-25-032 used on 001F		002
130A	NAS1149CN832R		. . WASHER used on 001A, 001B, 001C, 001D, 001E, 001F		012
140A	NAS1149CN832R		. . WASHER used on 001A, 001B, 001C, 001D, 001E, 001F		002
150A	A225400428-200		. . ANGLE used on 001A, 001B, 001C, 001D, 001E, 001F		001
160A	A225400431-200		. . SECTION-SEALING used on 001A, 001B, 001C, 001D, 001E, 001F		001
170A	5L0033400205000		. . INSERT-LOCK used on 001A, 001B, 001C, 001D, 001E, 001F		001
180A	NAS1100-06-5		. . SCREW used on 001A, 001B, 001C, 001D, 001E, 001F		002

- ITEM NOT ILLUSTRATED

THIS PAGE IS INTENTIONALLY LEFT BLANK

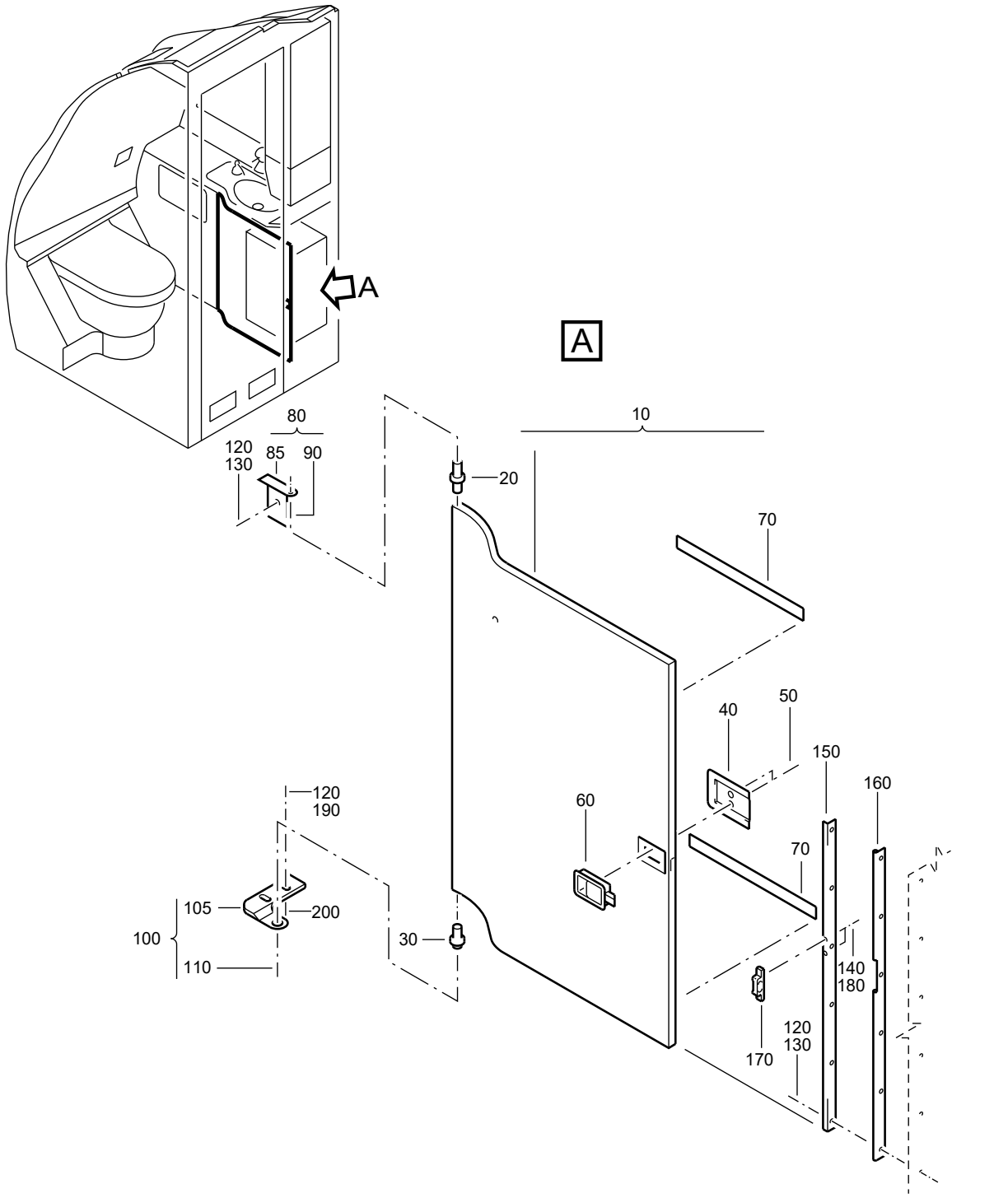

F_PL_254151_16_B_01_00

DOOR ASSY-WASHBASIN UNIT
Figure 16B/EN254151SHEET16B01

FIG. ITEM	PART NUMBER	AIRLINE STOCK NUMBER	NOMENCLATURE 1234567	EFF CODE	UNITS PER ASSY
16B -001A	D2549030504875		. DOOR ASSY-WASHBASIN UNIT NP used on 120A (25415101J), 120D (25415141B) SEE 25-41-51-01J FOR NHA SEE 25-41-51-41B FOR NHA		RF

- ITEM NOT ILLUSTRATED

FIG. ITEM	PART NUMBER	AIRLINE STOCK NUMBER	NOMENCLATURE 1234567	EFF CODE	UNITS PER ASSY
-001B	D2549020607075		. DOOR ASSY-WASHBASIN NP UNIT PRE VSB A2-254-25-106 PRE VSB A2-254-25-130 used on 120C (25415101J), 120C (25415101K), 120D(25415101L), 120D (25415101M), 120B (25415101N), 120E(25415101P), 120D (25415101Q), 120B (25415101S), 120B(25415101T), 120A (25415101U), 120B (25415101V), 120A(25415101W), 120E (25415101X), 120A (25415101Y), 120C(25415101Z), 120C (254151410), 120A (25415141A), 120A(25415141B), 120B (25415141C), 120A (25415141D), 120B(25415141F), 120C (25415141G), 120B (25415141H), 120A(25415141J), 120D (25415141K), 120B (25415141L), 120C(25415141M), 120D (25415141N), 120A (25415141P), 120B(25415141R), 120B (25415141S), 120B (25415141T), 120B(25415141U), 120A (25415141V), 120A (25415141W), 120B(25415141X), 120B (25415141Y), 120A (25415141Z), 120C(254151420), 120B (25415142A), 120D (25415142B), 120C(25415142C), 120A (25415142D), 120C (25415142E), 120C(25415142F), 120E (25415142G), 120D (25415142J), 120A(25415142K), 120B (25415142L), 120C (25415142M), 120D(25415142N), 120B (25415142P), 120A (25415142Q), 120A(25415142R),		RF

- ITEM NOT ILLUSTRATED

FIG. ITEM	PART NUMBER	AIRLINE STOCK NUMBER	NOMENCLATURE 1234567	EFF CODE	UNITS PER ASSY
			120F (25415142S), 120E (25415142T), 120G(25415142U) SEE 25-41-51-01J FOR NHA SEE 25-41-51-01K FOR NHA SEE 25-41-51-01L FOR NHA SEE 25-41-51-01M FOR NHA SEE 25-41-51-01N FOR NHA SEE 25-41-51-01P FOR NHA SEE 25-41-51-01Q FOR NHA SEE 25-41-51-01S FOR NHA SEE 25-41-51-01T FOR NHA SEE 25-41-51-01U FOR NHA SEE 25-41-51-01V FOR NHA SEE 25-41-51-01W FOR NHA SEE 25-41-51-01X FOR NHA SEE 25-41-51-01Y FOR NHA SEE 25-41-51-01Z FOR NHA SEE 25-41-51-410 FOR NHA SEE 25-41-51-41A FOR NHA SEE 25-41-51-41B FOR NHA SEE 25-41-51-41C FOR NHA SEE 25-41-51-41D FOR NHA SEE 25-41-51-41F FOR NHA SEE 25-41-51-41G FOR NHA SEE 25-41-51-41H FOR NHA SEE 25-41-51-41J FOR NHA SEE 25-41-51-41K FOR NHA SEE 25-41-51-41L FOR NHA SEE 25-41-51-41M FOR NHA SEE 25-41-51-41N FOR NHA SEE 25-41-51-41P FOR NHA SEE 25-41-51-41R FOR NHA SEE 25-41-51-41S FOR NHA SEE 25-41-51-41T FOR NHA SEE 25-41-51-41U FOR NHA SEE 25-41-51-41V FOR NHA SEE 25-41-51-41W FOR NHA SEE 25-41-51-41X FOR NHA SEE 25-41-51-41Y FOR NHA SEE 25-41-51-41Z FOR NHA		

- ITEM NOT ILLUSTRATED

FIG. ITEM	PART NUMBER	AIRLINE STOCK NUMBER	NOMENCLATURE 1234567	EFF CODE	UNITS PER ASSY
			SEE 25-41-51-420 FOR NHA SEE 25-41-51-42A FOR NHA SEE 25-41-51-42B FOR NHA SEE 25-41-51-42C FOR NHA SEE 25-41-51-42D FOR NHA SEE 25-41-51-42E FOR NHA SEE 25-41-51-42F FOR NHA SEE 25-41-51-42G FOR NHA SEE 25-41-51-42J FOR NHA SEE 25-41-51-42K FOR NHA SEE 25-41-51-42L FOR NHA SEE 25-41-51-42M FOR NHA SEE 25-41-51-42N FOR NHA SEE 25-41-51-42P FOR NHA SEE 25-41-51-42Q FOR NHA SEE 25-41-51-42R FOR NHA SEE 25-41-51-42S FOR NHA SEE 25-41-51-42T FOR NHA SEE 25-41-51-42U FOR NHA		
-001C	D2549030504075		. DOOR ASSY-WASHBASIN NP UNIT used on 120D (25415101J), 120C (25415101N), 120C(25415101S), 120A (25415101T), 120A (25415101V), 120F(25415101Y) SEE 25-41-51-01J FOR NHA SEE 25-41-51-01N FOR NHA SEE 25-41-51-01S FOR NHA SEE 25-41-51-01T FOR NHA SEE 25-41-51-01V FOR NHA SEE 25-41-51-01Y FOR NHA		RF

- ITEM NOT ILLUSTRATED

FIG. ITEM	PART NUMBER	AIRLINE STOCK NUMBER	NOMENCLATURE 1234567	EFF CODE	UNITS PER ASSY
-001D	D2549020610275		. DOOR ASSY-WASHBASIN UNIT NP used on 120D (25415101N), 120A (25415101S), 120D (25415101W), 120D (25415101Y), 120F (254151410), 120E(25415141G), 120D (25415141P), 120D (25415142G), 120A(25415142H) SEE 25-41-51-01N FOR NHA SEE 25-41-51-01S FOR NHA SEE 25-41-51-01W FOR NHA SEE 25-41-51-01Y FOR NHA SEE 25-41-51-410 FOR NHA SEE 25-41-51-41G FOR NHA SEE 25-41-51-41P FOR NHA SEE 25-41-51-42G FOR NHA SEE 25-41-51-42H FOR NHA		RF

- ITEM NOT ILLUSTRATED

FIG. ITEM	PART NUMBER	AIRLINE STOCK NUMBER	NOMENCLATURE 1234567	EFF CODE	UNITS PER ASSY
-001E	D2549010509475		. DOOR ASSY-WASHBASIN NP UNIT used on 120F (25415101J), 120A (25415101K), 120A(25415101L), 120A (25415101N), 120D (25415101P), 120E(25415101Q), 120B (25415101R), 120F (25415101W), 120A(25415101X), 120C (25415101Y), 120A (25415141C), 120F(25415141D), 120A (25415141G), 120A (25415141H), 120A(25415141R) SEE 25-41-51-01J FOR NHA SEE 25-41-51-01K FOR NHA SEE 25-41-51-01L FOR NHA SEE 25-41-51-01N FOR NHA SEE 25-41-51-01P FOR NHA SEE 25-41-51-01Q FOR NHA SEE 25-41-51-01R FOR NHA SEE 25-41-51-01W FOR NHA SEE 25-41-51-01X FOR NHA SEE 25-41-51-01Y FOR NHA SEE 25-41-51-41C FOR NHA SEE 25-41-51-41D FOR NHA SEE 25-41-51-41G FOR NHA SEE 25-41-51-41H FOR NHA SEE 25-41-51-41R FOR NHA		RF

- ITEM NOT ILLUSTRATED

FIG. ITEM	PART NUMBER	AIRLINE STOCK NUMBER	NOMENCLATURE 1234567	EFF CODE	UNITS PER ASSY
-001F	D2549030505475		. DOOR ASSY-WASHBASIN NP UNIT PRE VSB A2-254-25-130 used on 120E (25415101J), 120D (25415101K), 120A(25415101M), 120A (25415101P), 120B (25415101Q), 120D(25415101T), 120D (25415101V), 120E (25415101W), 120B(25415101Y), 120B (254151410), 120E (25415141B), 120E(25415141D), 120D (25415141G), 120D (25415141H), 120C(25415141K), 120D (25415141M), 120C (25415141N), 120C(25415141T), 120D (25415141W), 120E (25415141X), 120A(254151420), 120E (25415142E) SEE 25-41-51-01J FOR NHA SEE 25-41-51-01K FOR NHA SEE 25-41-51-01M FOR NHA SEE 25-41-51-01P FOR NHA SEE 25-41-51-01Q FOR NHA SEE 25-41-51-01T FOR NHA SEE 25-41-51-01V FOR NHA SEE 25-41-51-01W FOR NHA SEE 25-41-51-01Y FOR NHA SEE 25-41-51-410 FOR NHA SEE 25-41-51-41B FOR NHA SEE 25-41-51-41D FOR NHA SEE 25-41-51-41G FOR NHA SEE 25-41-51-41H FOR NHA SEE 25-41-51-41K FOR NHA SEE 25-41-51-41M FOR NHA SEE 25-41-51-41N FOR NHA SEE 25-41-51-41T FOR NHA SEE 25-41-51-41W FOR NHA SEE 25-41-51-41X FOR NHA SEE 25-41-51-420 FOR NHA SEE 25-41-51-42E FOR NHA		RF

- ITEM NOT ILLUSTRATED

FIG. ITEM	PART NUMBER	AIRLINE STOCK NUMBER	NOMENCLATURE 1234567	EFF CODE	UNITS PER ASSY
-001G	D2549010510475		. DOOR ASSY-WASHBASIN UNIT NP used on 120G (25415101J), 120E (25415101T), 120D(254151410), 120D (25415141A), 120C (25415141H), 120B(25415141M), 120B (25415141N), 120F (25415142E), 120E(25415142J), 120E (25415142K), 120B (25415142N), 120F(25415142R) SEE 25-41-51-01J FOR NHA SEE 25-41-51-01T FOR NHA SEE 25-41-51-410 FOR NHA SEE 25-41-51-41A FOR NHA SEE 25-41-51-41H FOR NHA SEE 25-41-51-41M FOR NHA SEE 25-41-51-41N FOR NHA SEE 25-41-51-42E FOR NHA SEE 25-41-51-42J FOR NHA SEE 25-41-51-42K FOR NHA SEE 25-41-51-42N FOR NHA SEE 25-41-51-42R FOR NHA		RF

- ITEM NOT ILLUSTRATED

FIG. ITEM	PART NUMBER	AIRLINE STOCK NUMBER	NOMENCLATURE 1234567	EFF CODE	UNITS PER ASSY
-001H	D2549030504675		. DOOR ASSY-WASHBASIN NP UNIT used on 120B (25415101K), 120C (25415101U), 120D (25415101X), 120D (25415141C), 120D (25415141Z), 120D(25415142A), 120F (25415142H), 120A (25415142L), 120F(25415142Q), 120F (25415142U) SEE 25-41-51-01K FOR NHA SEE 25-41-51-01U FOR NHA SEE 25-41-51-01X FOR NHA SEE 25-41-51-41C FOR NHA SEE 25-41-51-41Z FOR NHA SEE 25-41-51-42A FOR NHA SEE 25-41-51-42H FOR NHA SEE 25-41-51-42L FOR NHA SEE 25-41-51-42Q FOR NHA SEE 25-41-51-42U FOR NHA		RF

- ITEM NOT ILLUSTRATED

FIG. ITEM	PART NUMBER	AIRLINE STOCK NUMBER	NOMENCLATURE 1234567	EFF CODE	UNITS PER ASSY
-001J	D2549030506075		. DOOR ASSY-WASHBASIN UNIT NP used on 120A (25415101Q), 120E (25415101S), 120C (25415101V), 120B (25415101W), 120D (25415101Z), 120C(25415141B), 120D (25415141D), 120B (25415141G), 120E(25415141M), 120A (25415141N), 120C (25415141W), 120F(25415142D), 120C (25415142L), 120E (25415142N), 120E(25415142S), 120F (25415142T) SEE 25-41-51-01Q FOR NHA SEE 25-41-51-01S FOR NHA SEE 25-41-51-01V FOR NHA SEE 25-41-51-01W FOR NHA SEE 25-41-51-01Z FOR NHA SEE 25-41-51-41B FOR NHA SEE 25-41-51-41D FOR NHA SEE 25-41-51-41G FOR NHA SEE 25-41-51-41M FOR NHA SEE 25-41-51-41N FOR NHA SEE 25-41-51-41W FOR NHA SEE 25-41-51-42D FOR NHA SEE 25-41-51-42L FOR NHA SEE 25-41-51-42N FOR NHA SEE 25-41-51-42S FOR NHA SEE 25-41-51-42T FOR NHA		RF

- ITEM NOT ILLUSTRATED

FIG. ITEM	PART NUMBER	AIRLINE STOCK NUMBER	NOMENCLATURE 1234567		EFF CODE	UNITS PER ASSY
-001K	D2549010511475		. DOOR ASSY-WASHBASIN UNIT used on 120E (25415101K), 120E (25415101L), 120D(25415101S), 120E (25415142Q), 120D (25415142U) SEE 25-41-51-01K FOR NHA SEE 25-41-51-01L FOR NHA SEE 25-41-51-01S FOR NHA SEE 25-41-51-42Q FOR NHA SEE 25-41-51-42U FOR NHA	NP		RF
-001L	D2549030414675		. DOOR ASSY-WASHBASIN UNIT used on 120F (25415142N), 120D (25415142S) SEE 25-41-51-42N FOR NHA SEE 25-41-51-42S FOR NHA	NP		RF
-001M	D2549030701875		. DOOR ASSY-WASHBASIN UNIT used on 120E (25415142R), 120G (25415142S) SEE 25-41-51-42R FOR NHA SEE 25-41-51-42S FOR NHA	NP		RF
-001N	R22540166200075		. DOOR ASSY-WASHBASIN UNIT POST VSB A2-254-25-106 used on 120E (25415142C) SEE 25-41-51-42C FOR NHA	NP		RF

- ITEM NOT ILLUSTRATED

FIG. ITEM	PART NUMBER	AIRLINE STOCK NUMBER	NOMENCLATURE 1234567	EFF CODE	UNITS PER ASSY
-001P	R22540119605075		. DOOR ASSY-WASHBASIN UNIT NP POST VSB A2-254-25-130 used on 120G (25415141N), 120F (25415141R), 120F (25415141W), 120H (25415141X), 120G (254151420), 120F (25415142J) SEE 25-41-51-41N FOR NHA SEE 25-41-51-41R FOR NHA SEE 25-41-51-41W FOR NHA SEE 25-41-51-41W FOR NHA SEE 25-41-51-420 FOR NHA SEE 25-41-51-42J FOR NHA		RF
-001Q	R22540119604675		. DOOR ASSY-WASHBASIN UNIT NP POST VSB A2-254-25-130 used on 120H (254151410), 120E (25415141K) SEE 25-41-51-410 FOR NHA SEE 25-41-51-41K FOR NHA		RF
010A	A225400429-512		. . DOOR ASSY-WASHBASIN UNIT used on 001A, 001B, 001C		001
-010B	A225400429-562		. . DOOR ASSY-WASHBASIN UNIT PRE VSB A2-254-25-106 used on 001A, 001B, 001C, 001P, 001Q		001
-010C	A225400429-554		. . DOOR ASSY-WASHBASIN UNIT used on 001F		001
-010D	A225400429-552		. . DOOR ASSY-WASHBASIN UNIT used on 001E		001

- ITEM NOT ILLUSTRATED

FIG. ITEM	PART NUMBER	AIRLINE STOCK NUMBER	NOMENCLATURE 1234567	EFF CODE	UNITS PER ASSY
-010E	A225400429-576		. . DOOR ASSY-WASHBASIN UNIT used on 001G		001
-010F	A225400429-550		. . DOOR ASSY-WASHBASIN UNIT used on 001H		001
-010G	A225400429-588		. . DOOR ASSY-WASHBASIN UNIT used on 001J		001
-010H	A225400429-556		. . DOOR ASSY-WASHBASIN UNIT used on 001K		001
-010J	A225400429-590		. . DOOR ASSY-WASHBASIN UNIT used on 001D		001
-010K	A225400429-604		. . DOOR ASSY-WASHBASIN UNIT used on 001L		001
-010L	A225400429-606		. . DOOR ASSY-WASHBASIN UNIT used on 001M		001
-010M	A225400429-914		. . DOOR ASSY-WASHBASIN UNIT POST VSB A2-254-25-106 used on 001N		001
020A	A225400427-200		. . . PIN-ATTACH used on 010A, 010B, 010C, 010D, 010E, 010F, 010G, 010H, 010J, 010K, 010L, 010M		001

- ITEM NOT ILLUSTRATED

FIG. ITEM	PART NUMBER	AIRLINE STOCK NUMBER	NOMENCLATURE 1234567	EFF CODE	UNITS PER ASSY
030A	A225400427-202		. . . PIN-ATTACH used on 010A, 010B, 010C, 010D, 010E, 010F, 010G, 010H, 010J, 010K, 010L, 010M		001
040A	A225400432-204		. . . PLATE-MOUNTING used on 010A		001
050A	NAS514P632-5		. . . SCREW used on 010A, 010B, 010C, 010D, 010E, 010F, 010G, 010H, 010J, 010K, 010L, 010M		002
060A	AR138-5-2		. . . LATCH ASSY used on 010A, 010B, 010C, 010D, 010E, 010F, 010G, 010H, 010J, 010K, 010L, 010M		001
070A	0-112-0013-2000		. . . STRIP-SLIDING USE AS REQUIRED used on 010A, 010B, 010C, 010D, 010E, 010F, 010G, 010H, 010J, 010K, 010L, 010M		AR
080A	A225400426-000		. . ANGLE ASSY-MOUNTING used on 001A, 001B, 001C, 001D, 001E, 001F, 001G, 001H, 001J, 001K, 001L, 001M, 001N, 001P, 001Q		001
085A	A225400426-200		. . . ANGLE-MOUNTING used on 080A		001
090A	A225400427-204		. . . BUSHING used on 080A		001

- ITEM NOT ILLUSTRATED

FIG. ITEM	PART NUMBER	AIRLINE STOCK NUMBER	NOMENCLATURE 1234567	EFF CODE	UNITS PER ASSY
100A	A225400426-012		. . ANGLE ASSY-MOUNTING used on 001A, 001B, 001C, 001D, 001E, 001F, 001G, 001H, 001J, 001K, 001L, 001M, 001N, 001P, 001Q		001
105A	A225400426-216		. . . ANGLE-MOUNTING used on 100A		001
110A	A225400427-204		. . . BUSHING used on 100A		001
120A	NAS1096-2-5		. . SCREW BUY PN NAS1801-08-5 PRE VSB A2-254-25-106 PRE VSB A2-254-25-130 used on 001A, 001B, 001C, 001D, 001E, 001F, 001G, 001H, 001J, 001K, 001L, 001M		010
-120B	NAS1096-2-5		. . SCREW POST VSB A2-254-25-106 POST VSB A2-254-25-130 BUY PN NAS1801-08-5 used on 001N, 001P, 001Q		006
-124A	NAS1801-08-12		. . SCREW POST VSB A2-254-25-106 used on 001N		002
-125A	NAS1801-08-5		. . SCREW POST VSB A2-254-25-130 used on 001P, 001Q		004
-125B	NAS1801-08-5		. . SCREW POST VSB A2-254-25-106 used on 001N		002

- ITEM NOT ILLUSTRATED

FIG. ITEM	PART NUMBER	AIRLINE STOCK NUMBER	NOMENCLATURE 1234567	EFF CODE	UNITS PER ASSY
130A	NAS1149CN832R		. . WASHER used on 001A, 001B, 001C, 001D, 001E, 001F, 001G, 001H, 001J, 001K, 001L, 001M, 001N, 001P, 001Q		010
140A	NAS1149CN632R		. . WASHER used on 001A, 001B, 001C, 001D, 001E, 001F, 001G, 001H, 001J, 001K, 001L, 001M, 001N, 001P, 001Q		002
150A	A225400428-200		. . ANGLE used on 001A, 001B, 001C, 001D, 001E, 001F, 001G, 001H, 001J, 001K, 001L, 001M, 001N, 001P, 001Q		001
160A	A225400431-200		. . SECTION-SEALING used on 001A, 001B, 001C, 001D, 001E, 001F, 001G, 001H, 001J, 001K, 001L, 001M, 001N, 001P, 001Q		001
170A	5L0033400205000		. . INSERT-LOCK used on 001A, 001C		001
-170B	A325400431-204		. . CATCH used on 001B, 001D, 001E, 001F, 001G, 001H, 001J, 001K, 001L, 001M, 001N, 001P, 001Q		001
180A	NAS1100-06-5		. . SCREW used on 001A, 001B, 001C, 001D, 001E, 001F, 001G, 001H, 001J, 001K, 001L, 001M, 001N, 001P, 001Q		002

- ITEM NOT ILLUSTRATED

FIG. ITEM	PART NUMBER	AIRLINE STOCK NUMBER	NOMENCLATURE 1234567	EFF CODE	UNITS PER ASSY
190A	ASNA0113-40ADL		. . WASHER used on 001A, 001B, 001C, 001D, 001E, 001F, 001G, 001H, 001J, 001K, 001L, 001M, 001N, 001P, 001Q		002
200A	MS21042-08		. . NUT used on 001A, 001B, 001C, 001D, 001E, 001F, 001G, 001H, 001J, 001K, 001L, 001M, 001N, 001P, 001Q		002

- ITEM NOT ILLUSTRATED

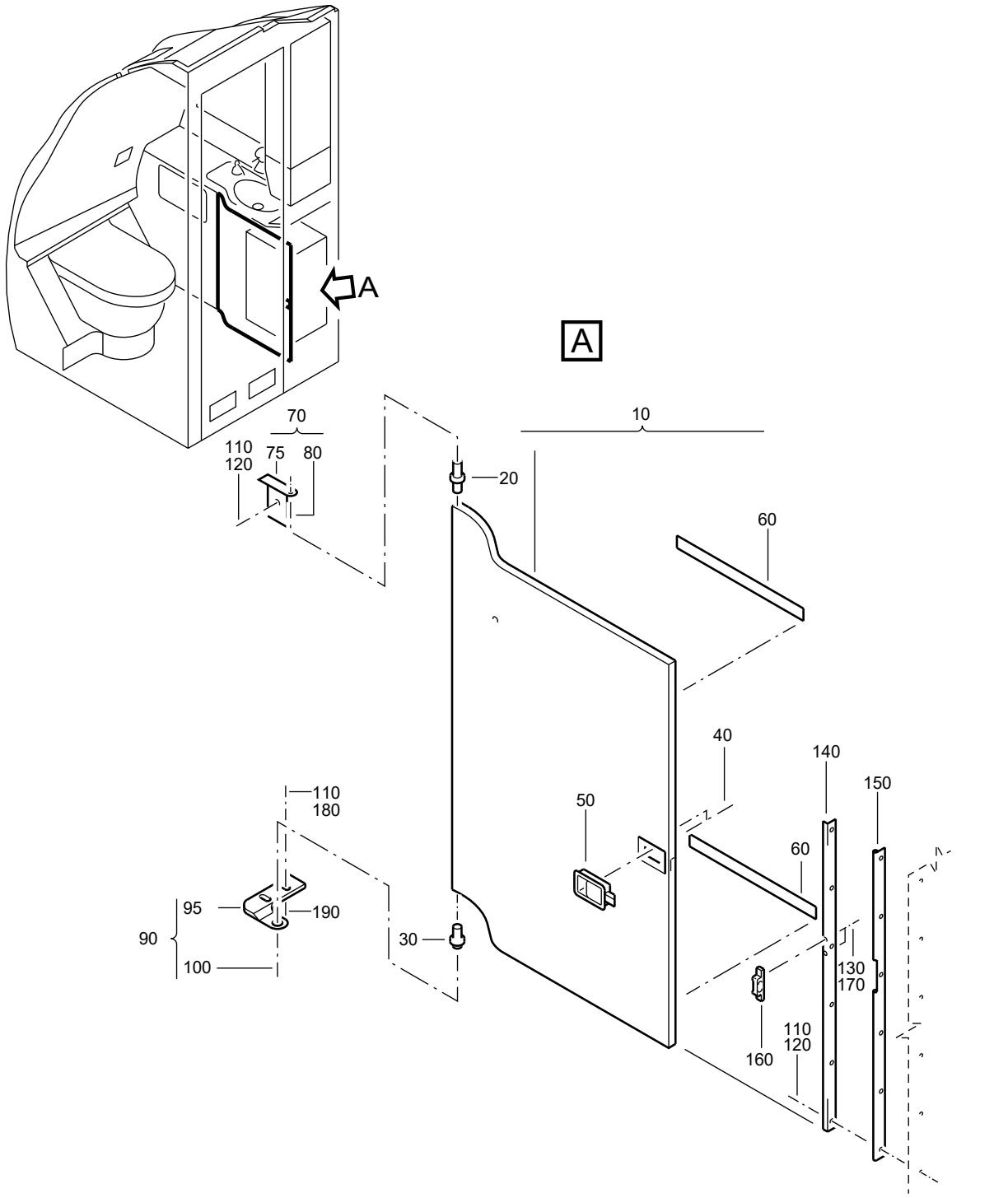

F_PL_254151_16_C_01_00

DOOR ASSY-WASHBASIN UNIT
Figure 16C/EN254151SHEET16C01

FIG. ITEM	PART NUMBER	AIRLINE STOCK NUMBER	NOMENCLATURE 1234567	EFF CODE	UNITS PER ASSY
16C -001A	D2549020607675		. DOOR ASSY-WASHBASIN UNIT NP used on 120B (25415101L), 120C (25415101M), 120B(25415101P), 120C (25415101T), 120C (25415101W), 120F(25415101X), 120A (25415101Z), 120A (254151410), 120C(25415141A), 120E (25415141C), 120B (25415141D), 120C(25415141F), 120C (25415141J), 120A (25415141K), 120A(25415141L), 120A (25415141M), 120E (25415141N), 120B(25415141P), 120E (25415141R), 120A (25415141S), 120A(25415141T), 120C (25415141U), 120B (25415141V), 120E (25415141W), 120F (25415141X), 120A (25415141Y), 120F(25415141Z), 120E (254151420), 120A (25415142A), 120A(25415142B), 120A (25415142C), 120D (25415142D), 120B(25415142E), 120D (25415142F), 120B (25415142G), 120B(25415142H), 120A (25415142J), 120F (25415142L), 120B(25415142M), 120C (25415142P), 120D (25415142Q), 120D(25415142T) SEE 25-41-51-01L FOR NHA SEE 25-41-51-01M FOR NHA SEE 25-41-51-01P FOR NHA SEE 25-41-51-01T FOR NHA SEE 25-41-51-01W FOR NHA SEE 25-41-51-01X FOR NHA SEE 25-41-51-01Z FOR NHA SEE 25-41-51-410 FOR NHA		RF

- ITEM NOT ILLUSTRATED

FIG. ITEM	PART NUMBER	AIRLINE STOCK NUMBER	NOMENCLATURE 1234567	EFF CODE	UNITS PER ASSY
			SEE 25-41-51-41A FOR NHA SEE 25-41-51-41C FOR NHA SEE 25-41-51-41D FOR NHA SEE 25-41-51-41F FOR NHA SEE 25-41-51-41J FOR NHA SEE 25-41-51-41K FOR NHA SEE 25-41-51-41L FOR NHA SEE 25-41-51-41M FOR NHA SEE 25-41-51-41N FOR NHA SEE 25-41-51-41P FOR NHA SEE 25-41-51-41R FOR NHA SEE 25-41-51-41S FOR NHA SEE 25-41-51-41T FOR NHA SEE 25-41-51-41U FOR NHA SEE 25-41-51-41V FOR NHA SEE 25-41-51-41W FOR NHA SEE 25-41-51-41X FOR NHA SEE 25-41-51-41Y FOR NHA SEE 25-41-51-41Z FOR NHA SEE 25-41-51-420 FOR NHA SEE 25-41-51-42A FOR NHA SEE 25-41-51-42B FOR NHA SEE 25-41-51-42C FOR NHA SEE 25-41-51-42D FOR NHA SEE 25-41-51-42E FOR NHA SEE 25-41-51-42F FOR NHA SEE 25-41-51-42G FOR NHA SEE 25-41-51-42H FOR NHA SEE 25-41-51-42J FOR NHA SEE 25-41-51-42L FOR NHA SEE 25-41-51-42M FOR NHA SEE 25-41-51-42P FOR NHA SEE 25-41-51-42Q FOR NHA SEE 25-41-51-42T FOR NHA		

- ITEM NOT ILLUSTRATED

FIG. ITEM	PART NUMBER	AIRLINE STOCK NUMBER	NOMENCLATURE 1234567	EFF CODE	UNITS PER ASSY
-001B	D2549030506275		. DOOR ASSY-WASHBASIN NP UNIT used on 120C (25415101L), 120B (25415101M), 120C(25415101Q), 120B (25415101U), 120B (25415101X), 120B(25415101Z), 120C (25415141D), 120B (25415141K), 120D(25415141R), 120A (25415141X), 120C (25415142J), 120G(25415142N), 120A (25415142P) SEE 25-41-51-01L FOR NHA SEE 25-41-51-01M FOR NHA SEE 25-41-51-01Q FOR NHA SEE 25-41-51-01U FOR NHA SEE 25-41-51-01X FOR NHA SEE 25-41-51-01Z FOR NHA SEE 25-41-51-41D FOR NHA SEE 25-41-51-41K FOR NHA SEE 25-41-51-41R FOR NHA SEE 25-41-51-41X FOR NHA SEE 25-41-51-42J FOR NHA SEE 25-41-51-42N FOR NHA SEE 25-41-51-42P FOR NHA		RF

- ITEM NOT ILLUSTRATED

FIG. ITEM	PART NUMBER	AIRLINE STOCK NUMBER	NOMENCLATURE 1234567	EFF CODE	UNITS PER ASSY
-001C	D2549030507275		. DOOR ASSY-WASHBASIN UNIT NP used on 120E (25415101N), 120F (25415101Q), 120D(25415101U), 120C (25415101X), 120E (25415101Y), 120C(25415141C), 120A (25415141F), 120E (25415141H), 120F(25415141N), 120B (25415141W), 120C (25415141X), 120B(254151420) SEE 25-41-51-01N FOR NHA SEE 25-41-51-01Q FOR NHA SEE 25-41-51-01U FOR NHA SEE 25-41-51-01X FOR NHA SEE 25-41-51-01Y FOR NHA SEE 25-41-51-41C FOR NHA SEE 25-41-51-41F FOR NHA SEE 25-41-51-41H FOR NHA SEE 25-41-51-41N FOR NHA SEE 25-41-51-41W FOR NHA SEE 25-41-51-41X FOR NHA SEE 25-41-51-420 FOR NHA		RF

- ITEM NOT ILLUSTRATED

FIG. ITEM	PART NUMBER	AIRLINE STOCK NUMBER	NOMENCLATURE 1234567	EFF CODE	UNITS PER ASSY
-001D	D2549020605475		. DOOR ASSY-WASHBASIN UNIT NP used on 120C (25415101P), 120G (25415101Y), 120D (25415141J), 120A (25415141U), 120C (25415141Z), 120B (25415142C), 120F (25415142G), 120E (25415142H), 120H(25415142L), 120A (25415142M), 120C (25415142N), 120D(25415142R), 120B (25415142S), 120A (25415142T) SEE 25-41-51-01P FOR NHA SEE 25-41-51-01Y FOR NHA SEE 25-41-51-41J FOR NHA SEE 25-41-51-41U FOR NHA SEE 25-41-51-41Z FOR NHA SEE 25-41-51-42C FOR NHA SEE 25-41-51-42G FOR NHA SEE 25-41-51-42H FOR NHA SEE 25-41-51-42L FOR NHA SEE 25-41-51-42M FOR NHA SEE 25-41-51-42N FOR NHA SEE 25-41-51-42R FOR NHA SEE 25-41-51-42S FOR NHA SEE 25-41-51-42T FOR NHA		RF
-001E	D2549020604675		. DOOR ASSY-WASHBASIN UNIT NP used on 120A (25415101R) SEE 25-41-51-01R FOR NHA		RF

- ITEM NOT ILLUSTRATED

FIG. ITEM	PART NUMBER	AIRLINE STOCK NUMBER	NOMENCLATURE 1234567	EFF CODE	UNITS PER ASSY
-001F	D2549010603675		. DOOR ASSY-WASHBASIN NP UNIT used on 120E (254151410), 120E (25415141A), 120C(25415141L), 120E (25415141P), 120D (25415141V), 120D(25415141X), 120E (25415141Z), 120D (254151420), 120C(25415142A), 120B (25415142B), 120D (25415142C), 120B(25415142D), 120B (25415142F), 120C (25415142H), 120E(25415142L), 120F (25415142M), 120C (25415142U) SEE 25-41-51-410 FOR NHA SEE 25-41-51-41A FOR NHA SEE 25-41-51-41L FOR NHA SEE 25-41-51-41P FOR NHA SEE 25-41-51-41V FOR NHA SEE 25-41-51-41X FOR NHA SEE 25-41-51-41Z FOR NHA SEE 25-41-51-420 FOR NHA SEE 25-41-51-42A FOR NHA SEE 25-41-51-42B FOR NHA SEE 25-41-51-42C FOR NHA SEE 25-41-51-42D FOR NHA SEE 25-41-51-42F FOR NHA SEE 25-41-51-42H FOR NHA SEE 25-41-51-42L FOR NHA SEE 25-41-51-42M FOR NHA SEE 25-41-51-42U FOR NHA		RF

- ITEM NOT ILLUSTRATED

FIG. ITEM	PART NUMBER	AIRLINE STOCK NUMBER	NOMENCLATURE 1234567	EFF CODE	UNITS PER ASSY
-001G	D2549020710075		. DOOR ASSY-WASHBASIN UNIT NP used on 120B (25415141A), 120B (25415141J), 120C(25415141V), 120C (25415141Y), 120B (25415142K) SEE 25-41-51-41A FOR NHA SEE 25-41-51-41J FOR NHA SEE 25-41-51-41V FOR NHA SEE 25-41-51-41Y FOR NHA SEE 25-41-51-42K FOR NHA		RF
-001H	D2549010609875		. DOOR ASSY-WASHBASIN UNIT NP used on 120C (25415141P), 120E (25415142D), 120C (25415142G), 120E (25415142M), 120B (25415142Q), 120A(25415142S), 120B (25415142U) SEE 25-41-51-41P FOR NHA SEE 25-41-51-42D FOR NHA SEE 25-41-51-42G FOR NHA SEE 25-41-51-42M FOR NHA SEE 25-41-51-42Q FOR NHA SEE 25-41-51-42S FOR NHA SEE 25-41-51-42U FOR NHA		RF
010A	A225400429-574		. . DOOR ASSY-WASHBASIN UNIT used on 001A		001
-010B	A225400429-558		. . DOOR ASSY-WASHBASIN UNIT used on 001B		001
-010C	A225400429-582		. . DOOR ASSY-WASHBASIN UNIT used on 001C		001

- ITEM NOT ILLUSTRATED

FIG. ITEM	PART NUMBER	AIRLINE STOCK NUMBER	NOMENCLATURE 1234567	EFF CODE	UNITS PER ASSY
-010D	A225400429-578		. . DOOR ASSY-WASHBASIN UNIT used on 001D		001
-010E	A225400429-572		. . DOOR ASSY-WASHBASIN UNIT used on 001E		001
-010F	A225400429-580		. . DOOR ASSY-WASHBASIN UNIT used on 001F		001
-010G	A225400429-900		. . DOOR ASSY-WASHBASIN UNIT used on 001G		001
-010H	A225400429-560		. . DOOR ASSY-WASHBASIN UNIT used on 001H		001
020A	A225400427-200		. . . PIN-ATTACH used on 010A, 010B, 010C, 010D, 010E, 010F, 010G, 010H		001
030A	A225400427-202		. . . PIN-ATTACH used on 010A, 010B, 010C, 010D, 010E, 010F, 010G, 010H		001
040A	NAS514P632-5		. . . SCREW used on 010A, 010B, 010C, 010D, 010E, 010F, 010G, 010H		002
050A	AR138-5-2		. . . LATCH ASSY used on 010A, 010B, 010C, 010D, 010E, 010F, 010H		001
-050B	AR146-5-2		. . . LATCH ASSY used on 010G		001

- ITEM NOT ILLUSTRATED

FIG. ITEM	PART NUMBER	AIRLINE STOCK NUMBER	NOMENCLATURE 1234567	EFF CODE	UNITS PER ASSY
060A	0-112-0013-2000		. . . STRIP-SLIDING USE AS REQUIRED used on 010A, 010B, 010C, 010D, 010E, 010F, 010G, 010H		AR
070A	A225400426-000		. . ANGLE ASSY-MOUNTING used on 001A, 001B, 001C, 001D, 001E, 001F, 001G, 001H		001
075A	A225400426-200		. . . ANGLE-MOUNTING used on 070A		001
080A	A225400427-204		. . . BUSHING used on 070A		001
090A	A225400426-012		. . ANGLE ASSY-MOUNTING used on 001A, 001B, 001C, 001D, 001E, 001F, 001G, 001H		001
095A	A225400426-216		. . . ANGLE-MOUNTING used on 090A		001
100A	A225400427-204		. . . BUSHING used on 090A		001
110A	NAS1096-2-5		. . SCREW BUY PN NAS1801-08-5 used on 001A, 001B, 001C, 001D, 001E, 001F, 001G, 001H		010
120A	NAS1149CN832R		. . WASHER used on 001A, 001B, 001C, 001D, 001E, 001F, 001G, 001H		010
130A	NAS1149CN632R		. . WASHER used on 001A, 001B, 001C, 001D, 001E, 001F, 001G, 001H		002

- ITEM NOT ILLUSTRATED

FIG. ITEM	PART NUMBER	AIRLINE STOCK NUMBER	NOMENCLATURE 1234567	EFF CODE	UNITS PER ASSY
140A	A225400428-200		. . ANGLE used on 001A, 001B, 001C, 001D, 001E, 001F, 001G, 001H		001
150A	A225400431-200		. . SECTION-SEALING used on 001A, 001B, 001C, 001D, 001E, 001F, 001G, 001H		001
160A	A325400431-204		. . CATCH used on 001A, 001B, 001C, 001D, 001E, 001F, 001G, 001H		001
170A	NAS1100-06-5		. . SCREW used on 001A, 001B, 001C, 001D, 001E, 001F, 001G, 001H		002
180A	ASNA0113-40ADL		. . WASHER used on 001A, 001B, 001C, 001D, 001E, 001F, 001G, 001H		002
190A	MS21042-08		. . NUT used on 001A, 001B, 001C, 001D, 001E, 001F, 001G, 001H		002

- ITEM NOT ILLUSTRATED

THIS PAGE IS INTENTIONALLY LEFT BLANK

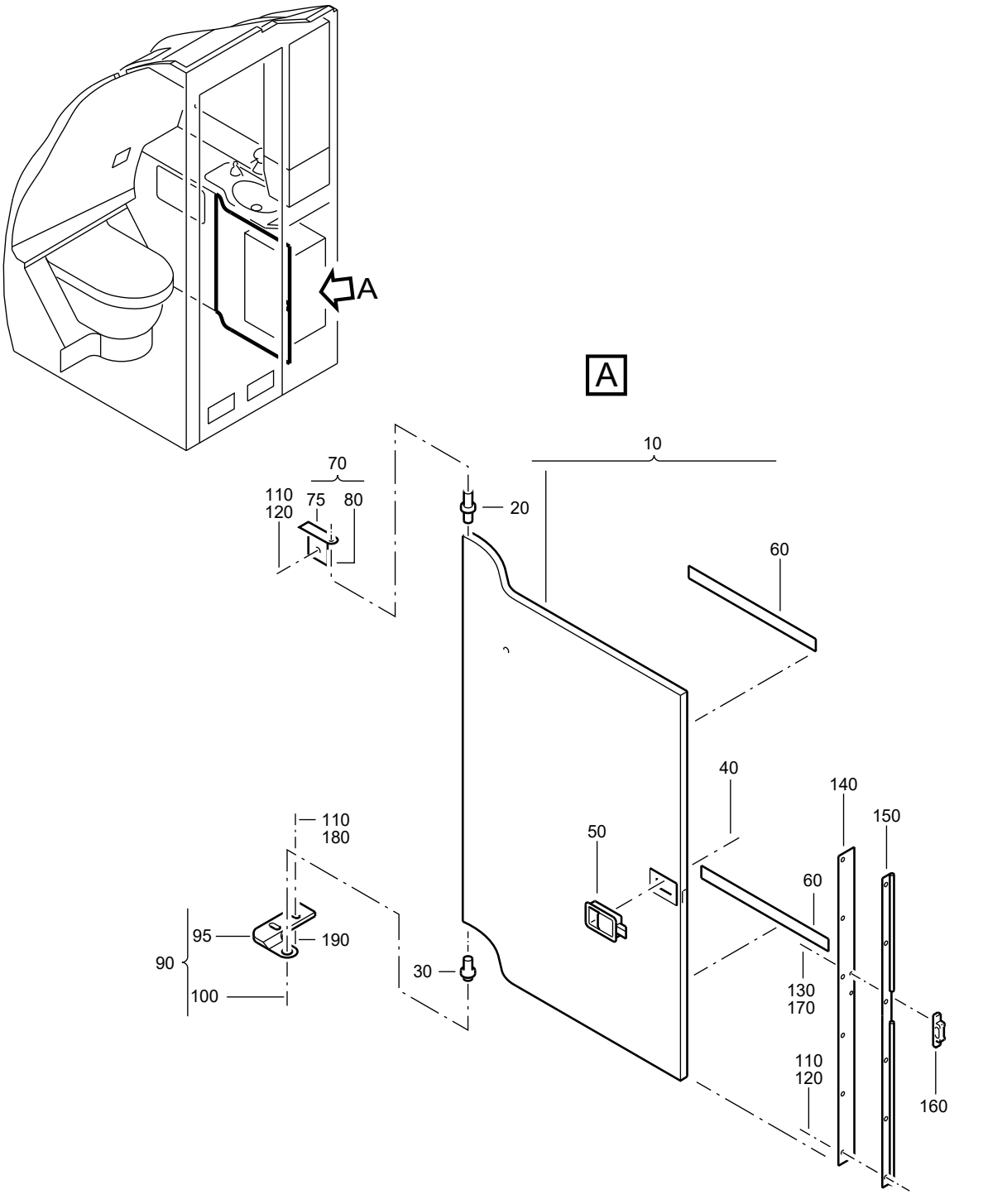

F_PL_254151_16_D_01_00

DOOR ASSY-WASHBASIN UNIT
Figure 16D/EN254151SHEET16D01

FIG. ITEM	PART NUMBER	AIRLINE STOCK NUMBER	NOMENCLATURE 1234567		EFF CODE	UNITS PER ASSY
16D						
-001A	D2549020802875		. DOOR ASSY-WASHBASIN UNIT used on 130A (25415141Q), 120F (25415142K) SEE 25-41-51-41Q FOR NHA SEE 25-41-51-42K FOR NHA	NP		RF
-001B	D2549020510675		. DOOR ASSY-WASHBASIN UNIT used on 120C (25415141R), 120A (25415142E), 120D (25415142K), 120G (25415142L), 120B (25415142R), 120C (25415142T) SEE 25-41-51-41R FOR NHA SEE 25-41-51-42E FOR NHA SEE 25-41-51-42K FOR NHA SEE 25-41-51-42L FOR NHA SEE 25-41-51-42R FOR NHA SEE 25-41-51-42T FOR NHA	NP		RF
-001C	D2549030702075		. DOOR ASSY-WASHBASIN UNIT used on 120G (25415142R) SEE 25-41-51-42R FOR NHA	NP		RF
-001D	D2549030703075		. DOOR ASSY-WASHBASIN UNIT used on 120E (25415142U) SEE 25-41-51-42U FOR NHA	NP		RF
010A	A225400429-562		. . DOOR ASSY-WASHBASIN UNIT used on 001A			001
-010B	A225400429-598		. . DOOR ASSY-WASHBASIN UNIT used on 001B			001

- ITEM NOT ILLUSTRATED

FIG. ITEM	PART NUMBER	AIRLINE STOCK NUMBER	NOMENCLATURE 1234567	EFF CODE	UNITS PER ASSY
-010C	A225400429-608		. . DOOR ASSY-WASHBASIN UNIT used on 001C		001
-010D	A225400429-610		. . DOOR ASSY-WASHBASIN UNIT used on 001D		001
020A	A225400427-200		. . . PIN-ATTACH used on 010A, 010B, 010C, 010D		001
030A	A225400427-202		. . . PIN-ATTACH used on 010A, 010B, 010C, 010D		001
040A	NAS514P632-5		. . . SCREW used on 010A, 010B, 010C, 010D		002
050A	AR138-5-2		. . . LATCH ASSY used on 010A, 010B, 010C, 010D		001
060A	0-112-0013-2000		. . . STRIP-SLIDING USE AS REQUIRED used on 010A, 010B, 010C, 010D		AR
070A	A225400426-000		. . ANGLE ASSY-MOUNTING used on 001A, 001B, 001C, 001D		001
075A	A225400426-200		. . . ANGLE-MOUNTING used on 070A		001
080A	A225400427-204		. . . BUSHING used on 070A		001
090A	A225400426-012		. . ANGLE ASSY-MOUNTING used on 001A, 001B, 001C, 001D		001
095A	A225400426-216		. . . ANGLE-MOUNTING used on 090A		001
100A	A225400427-204		. . . BUSHING used on 090A		001

- ITEM NOT ILLUSTRATED

FIG. ITEM	PART NUMBER	AIRLINE STOCK NUMBER	NOMENCLATURE 1234567	EFF CODE	UNITS PER ASSY
110A	NAS1096-2-5		. . SCREW BUY PN NAS1801-08-5 used on 001A, 001B, 001C, 001D		010
120A	NAS1149CN832R		. . WASHER used on 001A, 001B, 001C, 001D		010
130A	NAS1149CN632R		. . WASHER used on 001A, 001B, 001C, 001D		002
140A	A325400426-205		. . ANGLE used on 001A		001
-140B	A225400428-200		. . ANGLE used on 001B, 001C, 001D		001
150A	A225400431-200		. . SECTION-SEALING used on 001A, 001B, 001C, 001D		001
160A	A325400431-204		. . CATCH used on 001A, 001B, 001C, 001D		001
170A	NAS1100-06-5		. . SCREW used on 001A, 001B, 001C, 001D		002
180A	ASNA0113-40ADL		. . WASHER used on 001A, 001B, 001C, 001D		002
190A	MS21042-08		. . NUT used on 001A, 001B, 001C, 001D		002

- ITEM NOT ILLUSTRATED

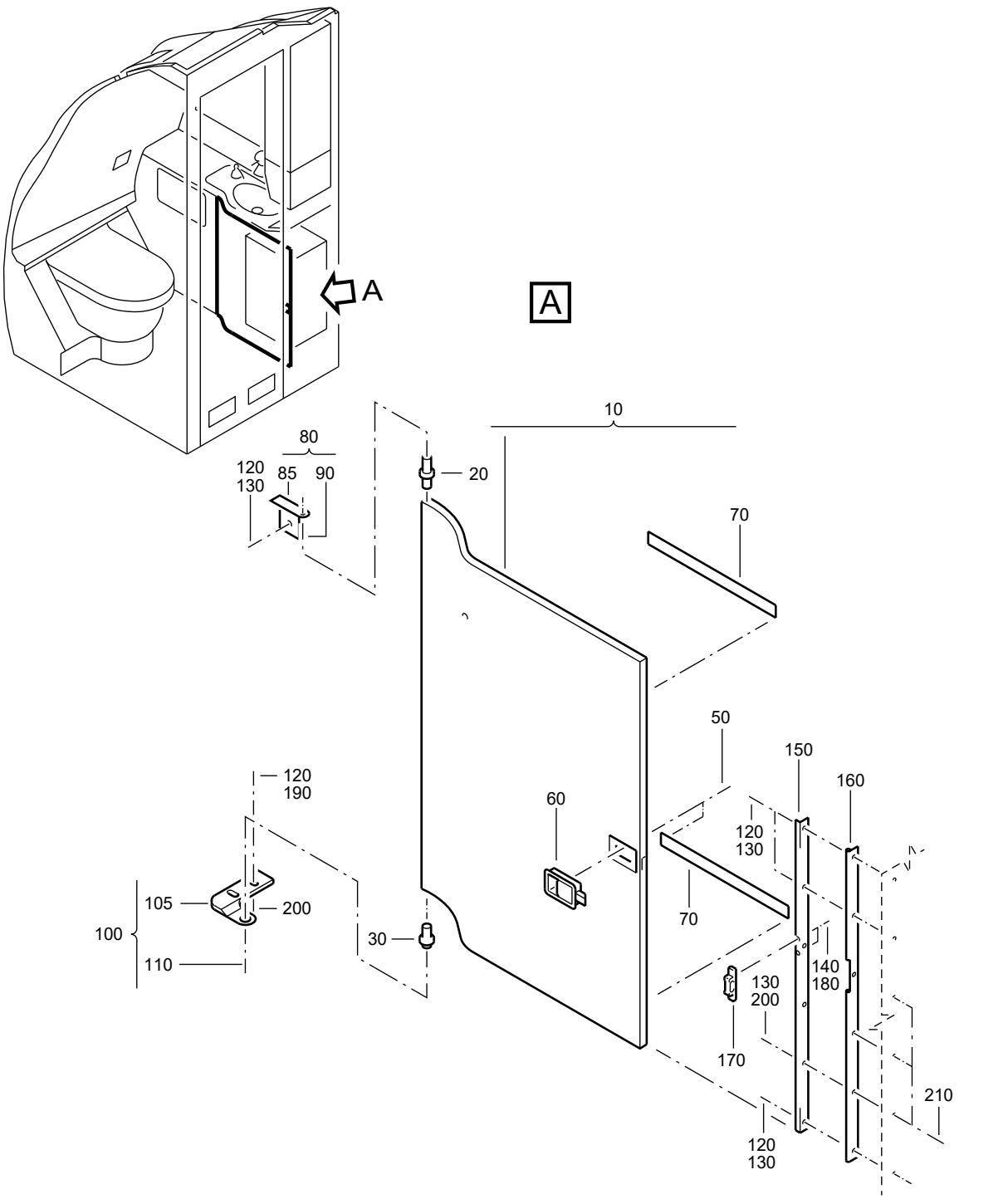

F_PL_254151_16_E_01_00

DOOR ASSY-WASHBASIN UNIT
Figure 16E/EN254151SHEET16E01

FIG. ITEM	PART NUMBER	AIRLINE STOCK NUMBER	NOMENCLATURE 1234567	EFF CODE	UNITS PER ASSY
16E -001A	D2549030606075		. DOOR ASSY-WASHBASIN UNIT NP PRE VSB A2-254-25-106 PRE VSB A2-254-25-130 used on 120F (25415141H), 120E (25415141J), 120G (25415141X), 120D (25415141Y), 120B (25415141Z), 120F(254151420), 120E (25415142A), 120C (25415142B), 120C(25415142D), 120D (25415142E), 120A (25415142F), 120A(25415142G), 120D (25415142H), 120B (25415142J), 120C(25415142K), 120D (25415142L), 120D (25415142M), 120A(25415142N), 120D (25415142P), 120C (25415142Q), 120C(25415142R), 120C (25415142S), 120B (25415142T), 120A(25415142U) SEE 25-41-51-41H FOR NHA SEE 25-41-51-41J FOR NHA SEE 25-41-51-41X FOR NHA SEE 25-41-51-41Y FOR NHA SEE 25-41-51-41Z FOR NHA SEE 25-41-51-420 FOR NHA SEE 25-41-51-42A FOR NHA SEE 25-41-51-42B FOR NHA SEE 25-41-51-42D FOR NHA SEE 25-41-51-42E FOR NHA SEE 25-41-51-42F FOR NHA SEE 25-41-51-42G FOR NHA SEE 25-41-51-42H FOR NHA SEE 25-41-51-42J FOR NHA SEE 25-41-51-42K FOR NHA SEE 25-41-51-42L FOR NHA SEE 25-41-51-42M FOR NHA SEE 25-41-51-42N FOR NHA		RF

- ITEM NOT ILLUSTRATED

FIG. ITEM	PART NUMBER	AIRLINE STOCK NUMBER	NOMENCLATURE 1234567	EFF CODE	UNITS PER ASSY
			SEE 25-41-51-42P FOR NHA SEE 25-41-51-42Q FOR NHA SEE 25-41-51-42R FOR NHA SEE 25-41-51-42S FOR NHA SEE 25-41-51-42T FOR NHA SEE 25-41-51-42U FOR NHA		
-001B	R22540166200275		. DOOR ASSY-WASHBASIN UNIT NP POST VSB A2-254-25-106 used on 120G (25415142G), 120J (25415142L), 120G (25415142T) SEE 25-41-51-42G FOR NHA SEE 25-41-51-42L FOR NHA SEE 25-41-51-42T FOR NHA		RF
-001C	R22540119606275		. DOOR ASSY-WASHBASIN UNIT NP POST VSB A2-254-25-130 used on 120H (254151420), 120G (25415142E), 120G (25415142J), 120E (25415142P) SEE 25-41-51-420 FOR NHA SEE 25-41-51-42E FOR NHA SEE 25-41-51-42J FOR NHA SEE 25-41-51-42P FOR NHA		RF
010A	A225400429-562		. . DOOR ASSY-WASHBASIN UNIT PRE VSB A2-254-25-106 used on 001A, 001C		001
-010B	A225400429-914		. . DOOR ASSY-WASHBASIN UNIT POST VSB A2-254-25-106 used on 001B		001
020A	A225400427-200		. . . PIN-ATTACH used on 010A, 010B		001

- ITEM NOT ILLUSTRATED

FIG. ITEM	PART NUMBER	AIRLINE STOCK NUMBER	NOMENCLATURE 1234567	EFF CODE	UNITS PER ASSY
030A	A225400427-202		. . . PIN-ATTACH used on 010A, 010B		001
050A	NAS514P632-5		. . . SCREW used on 010A, 010B		002
060A	AR138-5-2		. . . LATCH ASSY used on 010A, 010B		001
070A	0-112-0013-2000		. . . STRIP-SLIDING USE AS REQUIRED used on 010A, 010B		AR
080A	A225400426-000		. . ANGLE ASSY-MOUNTING used on 001A, 001B, 001C		001
085A	A225400426-200		. . . ANGLE-MOUNTING used on 080A		001
090A	A225400427-204		. . . BUSHING used on 080A		001
100A	A225400426-012		. . ANGLE ASSY-MOUNTING used on 001A, 001B, 001C		001
105A	A225400426-216		. . . ANGLE-MOUNTING used on 100A		001
110A	A225400427-204		. . . BUSHING used on 100A		001
120A	NAS1096-2-5		. . SCREW BUY PN NAS1801-08-5 PRE VSB A2-254-25-106 PRE VSB A2-254-25-130 POST SB 25-1287 used on 001A		006

- ITEM NOT ILLUSTRATED

FIG. ITEM	PART NUMBER	AIRLINE STOCK NUMBER	NOMENCLATURE 1234567	EFF CODE	UNITS PER ASSY
-120B	NAS1096-2-5		. . SCREW BUY PN NAS1801-08-5 POST VSB A2-254-25-106 POST VSB A2-254-25-130 used on 001B, 001C		002
-124A	NAS1801-08-12		. . SCREW POST VSB A2-254-25-106 used on 001B		002
-125A	NAS1801-08-5		. . SCREW POST VSB A2-254-25-130 used on 001C		004
-125B	NAS1801-08-5		. . SCREW POST VSB A2-254-25-106 used on 001B		002
130A	NAS1149CN832R		. . WASHER POST SB 25-1287 used on 001A, 001B, 001C		007
140A	NAS1149CN632R		. . WASHER used on 001A, 001B, 001C		002
150A	A225400428-200		. . ANGLE used on 001A, 001B, 001C		001
160A	A225400431-200		. . SECTION-SEALING used on 001A, 001B, 001C		001
170A	A325400431-204		. . CATCH used on 001A, 001B, 001C		001
180A	NAS1100-06-5		. . SCREW used on 001A, 001B, 001C		002
190A	ASNA0113-40ADL		. . WASHER used on 001A, 001B, 001C		002

- ITEM NOT ILLUSTRATED

FIG. ITEM	PART NUMBER	AIRLINE STOCK NUMBER	NOMENCLATURE 1234567	EFF CODE	UNITS PER ASSY
200A	MS21042-08		. . NUT POST SB 25-1287 used on 001A, 001B, 001C		002
210A	NAS1102-08-5		. . SCREW POST SB 25-1287 used on 001A, 001B, 001C		003

- ITEM NOT ILLUSTRATED

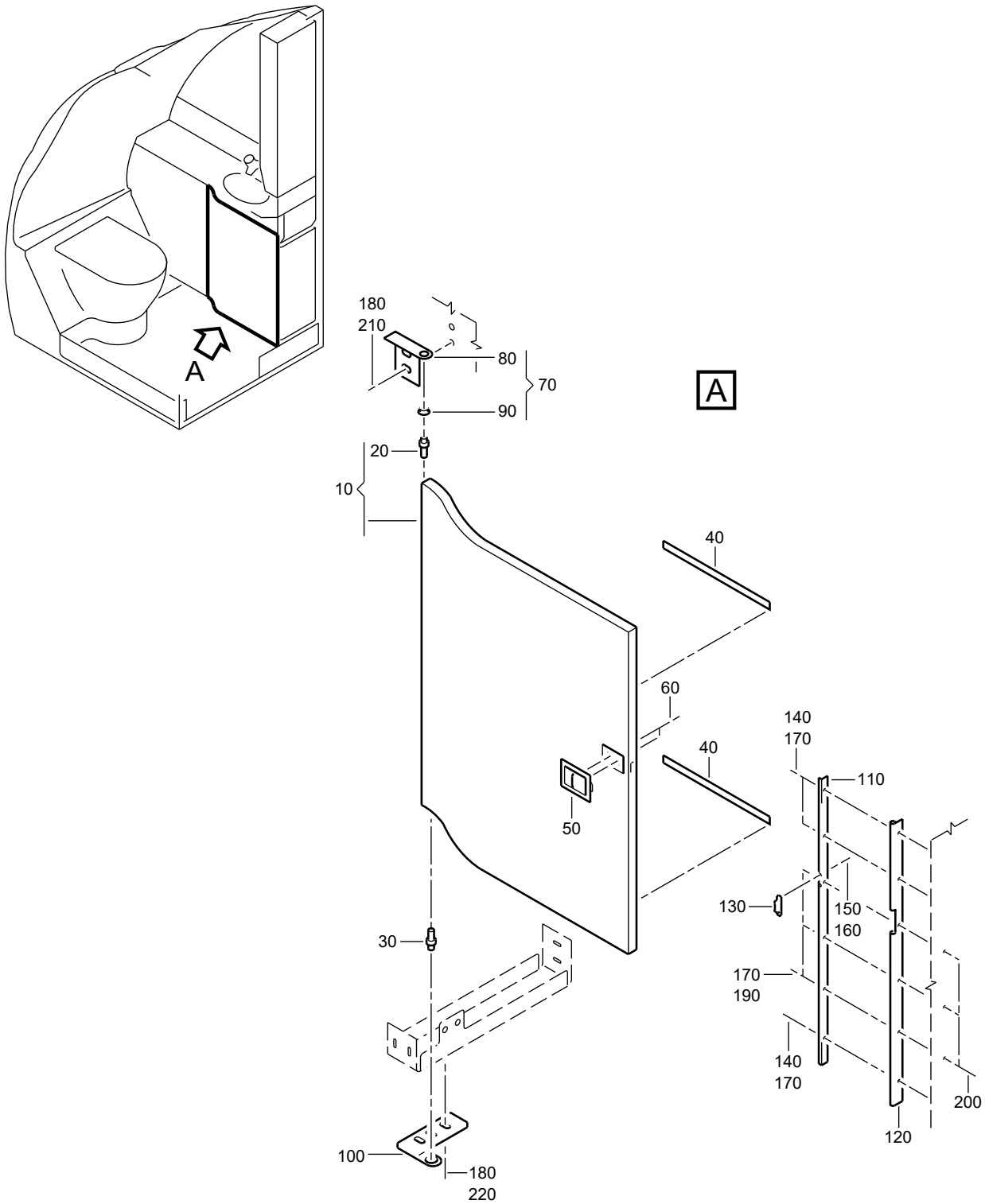

F_PL_254151_16_F_01_00

DOOR ASSY-WASHBASIN UNIT
Figure 16F/EN254151SHEET16F01

FIG. ITEM	PART NUMBER	AIRLINE STOCK NUMBER	NOMENCLATURE 1234567	EFF CODE	UNITS PER ASSY
16F					
-001A	D2547161202875		. DOOR ASSY-WASHBASIN UNIT NP POST SB 25-1674 used on 120F (25415141M), 120H (25415142N) SEE 25-41-51-41M FOR NHA SEE 25-41-51-42N FOR NHA		RF
010A	A225400429-906		. . DOOR ASSY-WASHBASIN UNIT POST SB 25-1674 used on 001A		001
020A	A225400427-200		. . . PIN-ATTACH used on 010A		001
030A	A225400427-202		. . . PIN-ATTACH used on 010A		001
040A	0-112-0013-2000		. . . STRIP-SLIDING USE AS REQUIRED used on 010A		AR
050A	A23001-2-5S		. . . LATCH ASSY used on 010A		001
060A	NAS514P632-5		. . . SCREW used on 010A		002
070A	A225400426-000		. . ANGLE ASSY-MOUNTING used on 001A		001
080A	A225400426-200		. . . ANGLE-MOUNTING used on 070A		001
090A	A225400427-204		. . . BUSHING used on 070A		001

- ITEM NOT ILLUSTRATED

FIG. ITEM	PART NUMBER	AIRLINE STOCK NUMBER	NOMENCLATURE 1234567	EFF CODE	UNITS PER ASSY
100A	A225400426-248		. . ANGLE-MOUNTING POST SB 25-1674 used on 001A		001
110A	A225400428-200		. . ANGLE used on 001A		001
120A	A225400431-200		. . SECTION-SEALING used on 001A		001
130A	A325400431-204		. . CATCH used on 001A		001
140A	NAS1801-08-5		. . SCREW used on 001A		003
150A	NAS1100-06-5		. . SCREW used on 001A		002
160A	NAS1149CN632R		. . WASHER used on 001A		002
170A	NAS1149CN832R		. . WASHER used on 001A		006
180A	ASNA0113-40ADL		. . WASHER POST SB 25-1674 used on 001A		004
190A	MS21042-08		. . NUT used on 001A		003
200A	NAS1102-08-5		. . SCREW used on 001A		003
210A	NAS1801-08-6		. . SCREW POST SB 25-1674 used on 001A		002
220A	NAS1801-08-9		. . SCREW POST SB 25-1674 used on 001A		002

- ITEM NOT ILLUSTRATED

THIS PAGE IS INTENTIONALLY LEFT BLANK

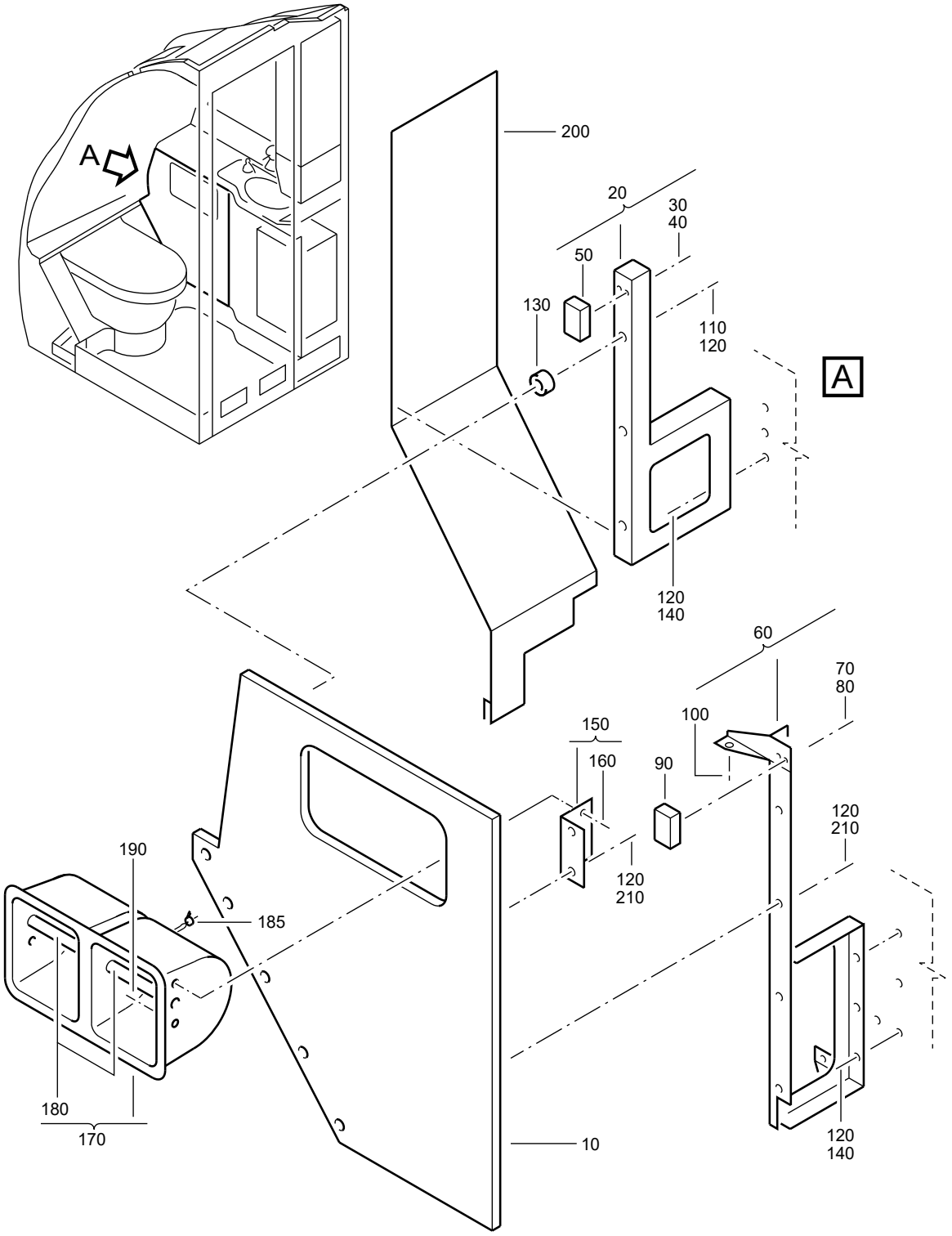

F_PL_254151_17_0_01_00

PANEL ASSY-WASHBASIN UNIT
Figure 17/EN254151SHEET17001

FIG. ITEM	PART NUMBER	AIRLINE STOCK NUMBER	NOMENCLATURE 1234567	EFF CODE	UNITS PER ASSY
17					
-001A	D2549010500076		. PANEL ASSY-WASHBASIN UNIT NP used on 130A (254151010), 130B (25415101A), 130B(25415101B), 130E (25415101E) SEE 25-41-51-010 FOR NHA SEE 25-41-51-01A FOR NHA SEE 25-41-51-01B FOR NHA SEE 25-41-51-01E FOR NHA		RF
010A	A225401430-500		. . PANEL ASSY-WASHBASIN UNIT used on 001A		001
020A	5L0047600100000		. . CONSOLE-WASHBASIN UNIT used on 001A		001
030A	NAS601-9		. . . SCREW used on 020A		002
040A	AN960-8		. . . WASHER BUY PN NAS1149FN832P used on 020A		002
050A	5L0047600102000		. . . PLATE-ADAPTER used on 020A		001
060A	A225400420-000		. . BRACKET-WASHBASIN UNIT used on 001A		001
070A	NAS1096-2-8		. . . SCREW BUY PN NAS1801-08-8 used on 060A		002
080A	AN960C8		. . . WASHER BUY PN NAS1149CN832R used on 060A		002

- ITEM NOT ILLUSTRATED

FIG. ITEM	PART NUMBER	AIRLINE STOCK NUMBER	NOMENCLATURE 1234567	EFF CODE	UNITS PER ASSY
090A	A225400420-206		. . . BRACKET-WASHBASIN UNIT used on 060A		001
100A	NAS1068A08		. . . NUT BUY PN MS21075L08 used on 060A		001
110A	NAS1096-2-9		. . SCREW BUY PN NAS1801-08-9 used on 001A		003
120A	AN960C8		. . WASHER BUY PN NAS1149CN832R used on 001A		018
130A	5L0065600100000		. . SPACER used on 001A		003
140A	NAS1096-2-5		. . SCREW BUY PN NAS1801-08-5 used on 001A		007
150A	A225400435-000		. . HOLDER-ROLL used on 001A		002
160A	NAS1068A08		. . . NUT BUY PN MS21075L08 used on 150A		002
170A	D2547093801600		. . HOLDER-PAPER ROLL used on 001A		001
180A	D2547093815000		. . . ROLLER used on 170A		002
185A	NSA935401-05		. . . TIE-CABLE used on 170A		001
190A	NAS1102-08-7		. . SCREW used on 001A		004

- ITEM NOT ILLUSTRATED

FIG. ITEM	PART NUMBER	AIRLINE STOCK NUMBER	NOMENCLATURE 1234567	EFF CODE	UNITS PER ASSY
200A	A225400423-000		. . PLATE ASSY-PROTECTIVE used on 001A		001
210A	NAS1096-2-4		. . SCREW BUY PN NAS1801-08-4 used on 001A		008

- ITEM NOT ILLUSTRATED

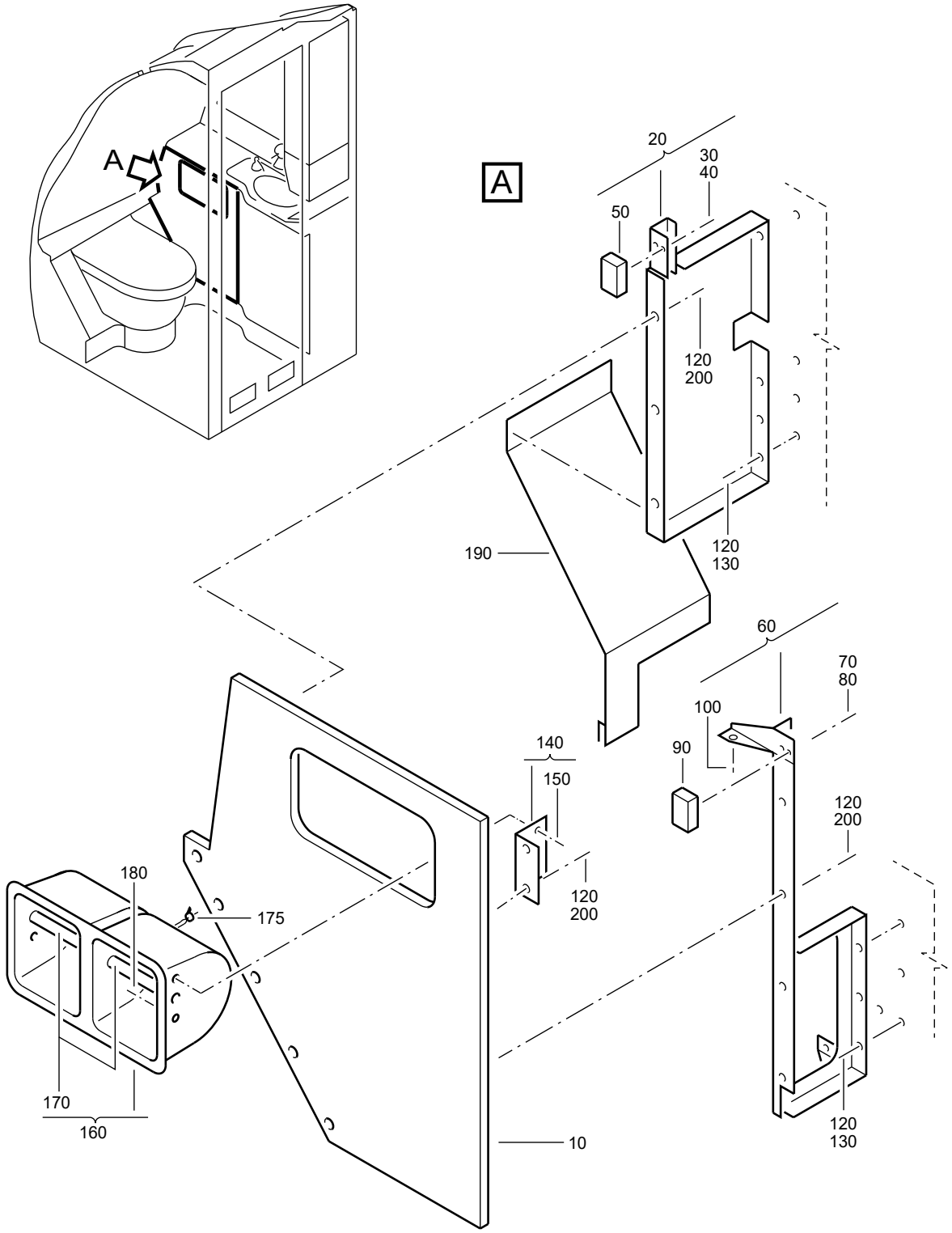

F_PL_254151_17_A_01_00

PANEL ASSY-WASHBASIN UNIT
Figure 17A/EN254151SHEET17A01

FIG. ITEM	PART NUMBER	AIRLINE STOCK NUMBER	NOMENCLATURE 1234567	EFF CODE	UNITS PER ASSY
17A					
-001A	D2549020500076		. PANEL ASSY-WASHBASIN UNIT NP used on 130B (254151010), 130E (25415101A), 130E(25415101B), 130D (25415101D), 130C (25415101E), 130C(25415101F) SEE 25-41-51-010 FOR NHA SEE 25-41-51-01A FOR NHA SEE 25-41-51-01B FOR NHA SEE 25-41-51-01D FOR NHA SEE 25-41-51-01E FOR NHA SEE 25-41-51-01F FOR NHA		RF
-001B	D2549020500276		. PANEL ASSY-WASHBASIN UNIT NP used on 130C (254151010), 130A (25415101B), 130E(25415141T) SEE 25-41-51-010 FOR NHA SEE 25-41-51-01B FOR NHA SEE 25-41-51-41T FOR NHA		RF

- ITEM NOT ILLUSTRATED

FIG. ITEM	PART NUMBER	AIRLINE STOCK NUMBER	NOMENCLATURE 1234567	EFF CODE	UNITS PER ASSY
-001C	D2549010500476		. PANEL ASSY-WASHBASIN UNIT NP used on 130D (254151010), 130A (25415101A), 130C(25415101B), 130F (25415101C), 130C (25415101D), 130B(25415101E), 130E (25415101F), 130G (25415101G), 130H(25415101K), 130D (25415141T) SEE 25-41-51-010 FOR NHA SEE 25-41-51-01A FOR NHA SEE 25-41-51-01B FOR NHA SEE 25-41-51-01C FOR NHA SEE 25-41-51-01D FOR NHA SEE 25-41-51-01E FOR NHA SEE 25-41-51-01F FOR NHA SEE 25-41-51-01G FOR NHA SEE 25-41-51-01K FOR NHA SEE 25-41-51-41T FOR NHA		RF
-001D	D2549010501876		. PANEL ASSY-WASHBASIN UNIT NP used on 130C (25415101A), 130A (25415101C), 130F (25415101E), 130B (25415101F) SEE 25-41-51-01A FOR NHA SEE 25-41-51-01C FOR NHA SEE 25-41-51-01E FOR NHA SEE 25-41-51-01F FOR NHA		RF

- ITEM NOT ILLUSTRATED

FIG. ITEM	PART NUMBER	AIRLINE STOCK NUMBER	NOMENCLATURE 1234567		EFF CODE	UNITS PER ASSY
-001E	D2549010502276		. PANEL ASSY-WASHBASIN UNIT PRE VSB A2-254-25-013 used on 130D (25415101A), 130D (25415101B), 130D (25415101C), 130B (25415101D), 130D (25415101E), 130D(25415101F), 130H (25415101G), 130J (25415101K) SEE 25-41-51-01A FOR NHA SEE 25-41-51-01B FOR NHA SEE 25-41-51-01C FOR NHA SEE 25-41-51-01D FOR NHA SEE 25-41-51-01E FOR NHA SEE 25-41-51-01F FOR NHA SEE 25-41-51-01G FOR NHA SEE 25-41-51-01K FOR NHA	NP		RF
-001F	D2549010504276		. PANEL ASSY-WASHBASIN UNIT used on 130C (25415101C) SEE 25-41-51-01C FOR NHA	NP		RF
-001G	D2549020600476		. PANEL ASSY-WASHBASIN UNIT used on 130G (254151410) SEE 25-41-51-410 FOR NHA	NP		RF
-001H	D2549020601276		. PANEL ASSY-WASHBASIN UNIT used on 130G (25415101E), 130G (25415101L) SEE 25-41-51-01E FOR NHA SEE 25-41-51-01L FOR NHA	NP		RF

- ITEM NOT ILLUSTRATED

FIG. ITEM	PART NUMBER	AIRLINE STOCK NUMBER	NOMENCLATURE 1234567		EFF CODE	UNITS PER ASSY
-001J	D2549020601476		. PANEL ASSY-WASHBASIN UNIT used on 130H (25415101E), 130G (25415101H) SEE 25-41-51-01E FOR NHA SEE 25-41-51-01H FOR NHA	NP		RF
-001K	D2549020602076		. PANEL ASSY-WASHBASIN UNIT used on 130F (25415101F), 130F (25415101N) SEE 25-41-51-01F FOR NHA SEE 25-41-51-01N FOR NHA	NP		RF
-001L	D2549020603076		. PANEL ASSY-WASHBASIN UNIT PRE VSB A2-254-25-013 PRE VSB A2-254-25-032 used on 130D (25415101G), 130A (25415101H), 130F (25415101L) SEE 25-41-51-01G FOR NHA SEE 25-41-51-01H FOR NHA SEE 25-41-51-01L FOR NHA	NP		RF
-001M	D2549010509076		. PANEL ASSY-WASHBASIN UNIT used on 130F (25415101G), 130B (25415101H), 130B (25415101J) SEE 25-41-51-01G FOR NHA SEE 25-41-51-01H FOR NHA SEE 25-41-51-01J FOR NHA	NP		RF

- ITEM NOT ILLUSTRATED

FIG. ITEM	PART NUMBER	AIRLINE STOCK NUMBER	NOMENCLATURE 1234567	EFF CODE	UNITS PER ASSY
-001N	D2549020601676		. PANEL ASSY-WASHBASIN UNIT NP used on 130A (25415101F), 130C (25415101H), 130G(25415101K), 130E (25415101M) SEE 25-41-51-01F FOR NHA SEE 25-41-51-01H FOR NHA SEE 25-41-51-01K FOR NHA SEE 25-41-51-01M FOR NHA		RF
-001P	D2549010502276		. PANEL ASSY-WASHBASIN UNIT NP POST VSB A2-254-25-013 used on 130G (25415101C) SEE 25-41-51-01C FOR NHA		RF
-001Q	D2549020603076		. PANEL ASSY-WASHBASIN UNIT NP POST VSB A2-254-25-013 used on 130A (25415101H), 130H(25415101L) SEE 25-41-51-01H FOR NHA SEE 25-41-51-01L FOR NHA		RF
-001R	D2549020603076		. PANEL ASSY-WASHBASIN UNIT NP POST VSB A2-254-25-032 used on 130J (25415101H), 130J (25415101L) SEE 25-41-51-01H FOR NHA SEE 25-41-51-01L FOR NHA		RF
010A	A225401430-504		. . PANEL ASSY-WASHBASIN UNIT used on 001A		001
-010B	A225401430-506		. . PANEL ASSY-WASHBASIN UNIT used on 001B		001

- ITEM NOT ILLUSTRATED

FIG. ITEM	PART NUMBER	AIRLINE STOCK NUMBER	NOMENCLATURE 1234567	EFF CODE	UNITS PER ASSY
-010C	A225401430-502		. . PANEL ASSY-WASHBASIN UNIT used on 001C, 001M		001
-010D	A225401430-508		. . PANEL ASSY-WASHBASIN UNIT used on 001D		001
-010E	A225401430-510		. . PANEL ASSY-WASHBASIN UNIT used on 001E, 001L, 001P, 001Q, 001R		001
-010F	A225401430-512		. . PANEL ASSY-WASHBASIN UNIT used on 001F, 001K		001
-010G	A225401430-514		. . PANEL ASSY-WASHBASIN UNIT used on 001G		001
-010H	A225401430-518		. . PANEL ASSY-WASHBASIN UNIT used on 001H		001
-010J	A225401430-520		. . PANEL ASSY-WASHBASIN UNIT used on 001J, 001N		001
020A	A225400421-000		. . BRACKET-WASHBASIN UNIT PRE VSB A2-254-25-013 PRE VSB A2-254-25-032 used on 001A, 001B, 001C, 001D, 001E, 001F, 001G, 001H, 001J, 001K, 001L, 001M, 001N		001
-020B	A225400420-226		. . BRACKET-WASHBASIN UNIT POST VSB A2-254-25-013 used on 001P, 001Q		001

- ITEM NOT ILLUSTRATED

FIG. ITEM	PART NUMBER	AIRLINE STOCK NUMBER	NOMENCLATURE 1234567	EFF CODE	UNITS PER ASSY
-020C	A225400421-200		. . BRACKET-WASHBASIN UNIT POST VSB A2-254-25-032 used on 001R		001
030A	NAS1096-2-8		. . . SCREW BUY PN NAS1801-08-8 PRE VSB A2-254-25-032 used on 020A		002
-030B	NAS1801-08-9		. . . SCREW POST VSB A2-254-25-032 used on 020B, 020C		002
-035A	NAS1801-08-14		. . . SCREW POST VSB A2-254-25-032 used on 020B, 020C		002
040A	AN960C8		. . . WASHER BUY PN NAS1149CN832R PRE VSB A2-254-25-032 used on 020A		006
-040B	ASNA0113-40ADL		. . . WASHER POST VSB A2-254-25-032 used on 020B, 020C		006
-045A	MS21042-08		. . . NUT POST VSB A2-254-25-032 used on 020B, 020C		002
-046A	NSA5067-08-1		. . . NUT POST VSB A2-254-25-032 used on 020B, 020C		002
-047A	A325400420-210		. . SPACER used on 020B		AR
050A	5L0047600102000		. . . PLATE-ADAPTER PRE VSB A2-254-25-013 PRE VSB A2-254-25-032 used on 020A		001

- ITEM NOT ILLUSTRATED

FIG. ITEM	PART NUMBER	AIRLINE STOCK NUMBER	NOMENCLATURE 1234567	EFF CODE	UNITS PER ASSY
-050B	A325400420-206		. . . PLATE-ADAPTER POST VSB A2-254-25-013 POST VSB A2-254-25-032 used on 020B, 020C		001
060A	A225400420-000		. . BRACKET-WASHBASIN UNIT PRE VSB A2-254-25-013 PRE VSB A2-254-25-032 used on 001A, 001B, 001C, 001D, 001E, 001F, 001G, 001H, 001J, 001K, 001L, 001M, 001N		001
-060B	A225400426-002		. . BRACKET-WASHBASIN UNIT POST VSB A2-254-25-013 used on 001P, 001Q		001
-060C	A225400420-226		. . BRACKET-WASHBASIN UNIT POST VSB A2-254-25-032 used on 001R		001
070A	NAS1096-2-8		. . . SCREW BUY PN NAS1801-08-8 used on 060A		002
-070B	NAS1801-08-5		. . . SCREW used on 060B		002
080A	AN960C8		. . . WASHER BUY PN NAS1149CN832R used on 060A		002
-080B	NAS1149CN832R		. . . WASHER used on 060B		002
090A	5L0047600102000		. . . BRACKET-WASHBASIN UNIT PRE VSB A2-254-25-013 PRE VSB A2-254-25-032 used on 060A		001

- ITEM NOT ILLUSTRATED

FIG. ITEM	PART NUMBER	AIRLINE STOCK NUMBER	NOMENCLATURE 1234567	EFF CODE	UNITS PER ASSY
-090B	A325400420-208		. . . BRACKET-WASHBASIN UNIT POST VSB A2-254-25-013 POST VSB A2-254-25-032 used on 060B, 060C		001
100A	NAS1068A08		. . . NUT BUY PN MS21075L08 used on 060A		001
-105A	A325400420-210		. . . SPACER POST VSB A2-254-25-032 used on 060B, 060C		002
-106A	NAS1801-08-9		. . . SCREW used on 060B		002
-106B	NAS1801-08-11		. . . SCREW POST VSB A2-254-25-032 used on 060C		002
-107A	NAS1801-08-14		. . . SCREW POST VSB A2-254-25-032 used on 060B, 060C		002
-108A	ASNA0113-40ADL		. . . WASHER POST VSB A2-254-25-032 used on 060B, 060C		006
-109A	MS21042-08		. . . NUT POST VSB A2-254-25-032 used on 060B, 060C		002
-110A	NSA5067-08-1		. . . NUT POST VSB A2-254-25-032 used on 060B, 060C		002

- ITEM NOT ILLUSTRATED

FIG. ITEM	PART NUMBER	AIRLINE STOCK NUMBER	NOMENCLATURE 1234567	EFF CODE	UNITS PER ASSY
120A	AN960C8		. . WASHER BUY PN NAS1149CN832R used on 001A, 001B, 001C, 001D, 001E, 001F, 001G, 001H, 001J, 001K		018
-120B	NAS1149CN832R		. . WASHER PRE VSB A2-254-25-032 used on 001L, 001M, 001N		018
-120C	NAS1149CN832R		. . . WASHER POST VSB A2-254-25-032 used on 001P, 001Q, 001R		011
-125A	ASNA0113-40ADL		. . . WASHER POST VSB A2-254-25-032 used on 001P, 001Q, 001R		007
130A	NAS1096-2-5		. . SCREW BUY PN NAS1801-08-5 used on 001A, 001B, 001C, 001D, 001E, 001F, 001G, 001H, 001J, 001K, 001L, 001M, 001N, 001P, 001Q, 001R		007
140A	A225400435-000		. . HOLDER-ROLL used on 001A, 001B, 001C, 001D, 001E, 001F, 001G, 001H, 001J, 001K, 001L, 001M, 001N, 001P, 001Q, 001R		002
150A	NAS1068A08		. . . NUT BUY PN MS21075L08 used on 140A		002
160A	D2547093800800		. . HOLDER-PAPER ROLL used on 001A		001
-160B	D2547093804400		. . HOLDER-PAPER ROLL used on 001B		001

- ITEM NOT ILLUSTRATED

FIG. ITEM	PART NUMBER	AIRLINE STOCK NUMBER	NOMENCLATURE 1234567	EFF CODE	UNITS PER ASSY
-160C	D2547093802600		. . HOLDER-PAPER ROLL used on 001C, 001M		001
-160D	D2547093803400		. . HOLDER-PAPER ROLL used on 001D		001
-160E	D2547093801400		. . HOLDER-PAPER ROLL used on 001E, 001K, 001L, 001P, 001Q, 001R		001
-160F	D2547093805400		. . HOLDER-PAPER ROLL used on 001F		001
-160G	D2547093803200		. . HOLDER-PAPER ROLL used on 001G		001
-160H	D2547093806000		. . HOLDER-PAPER ROLL used on 001H		001
-160J	D2547093804600		. . HOLDER-PAPER ROLL used on 001J, 001N		001
170A	D2547093815000		. . . ROLLER used on 160A, 160B, 160C, 160D, 160E, 160F, 160G,160H, 160J		002
175A	NSA935401-05		. . . TIE-CABLE used on 160A, 160B, 160C, 160D, 160E, 160F, 160G,160H, 160J		001
180A	NAS1102-08-7		. . SCREW used on 001A, 001B, 001C, 001D, 001E, 001F, 001G, 001H, 001J, 001K, 001L, 001M, 001N, 001P, 001Q, 001R		004

- ITEM NOT ILLUSTRATED

FIG. ITEM	PART NUMBER	AIRLINE STOCK NUMBER	NOMENCLATURE 1234567	EFF CODE	UNITS PER ASSY
190A	A225400423-002		. . PLATE ASSY-PROTECTIVE used on 001A, 001B, 001C, 001D, 001E, 001F, 001G, 001H, 001J, 001K, 001L, 001M, 001N, 001P, 001Q, 001R		001
200A	NAS1096-2-4		. . SCREW PRE VSB A2-254-25-032 BUY PN NAS1801-08-4 used on 001A, 001B, 001C, 001D, 001E, 001F, 001G, 001H, 001J, 001K, 001L, 001M, 001N, 001P, 001Q		011
-200B	NAS1096-2-4		. . SCREW POST VSB A2-254-25-032 used on 001R		004
-205A	NAS1801-08-4		. . SCREW POST VSB A2-254-25-032 used on 001R		007

- ITEM NOT ILLUSTRATED

THIS PAGE IS INTENTIONALLY LEFT BLANK

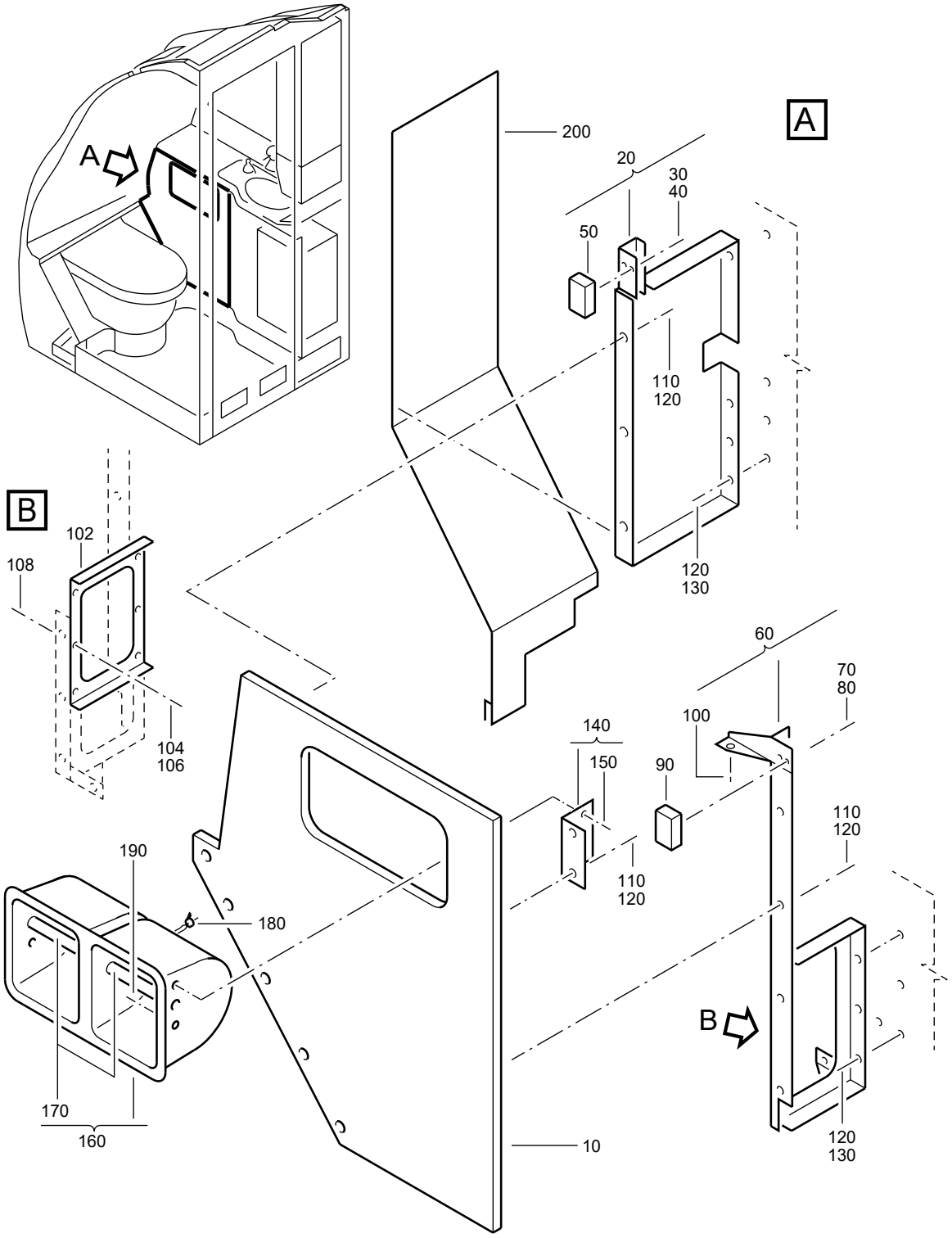

F_PL_254151_17_B_01_00

PANEL ASSY-WASHBASIN UNIT
Figure 17B/EN254151SHEET17B01

FIG. ITEM	PART NUMBER	AIRLINE STOCK NUMBER	NOMENCLATURE 1234567		EFF CODE	UNITS PER ASSY
17B						
-001A	D2549030500676		. PANEL ASSY-WASHBASIN UNIT used on 130B (25415101C), 130A (25415101E) SEE 25-41-51-01C FOR NHA SEE 25-41-51-01E FOR NHA	NP		RF
-001B	D2549020504076		. PANEL ASSY-WASHBASIN UNIT used on 130A (25415101D) SEE 25-41-51-01D FOR NHA	NP		RF
-001C	D2549030500876		. PANEL ASSY-WASHBASIN UNIT used on 130F (25415101A), 130E (25415101C), 130D(25415101H) SEE 25-41-51-01A FOR NHA SEE 25-41-51-01C FOR NHA SEE 25-41-51-01H FOR NHA	NP		RF
-001D	D2549010508076		. PANEL ASSY-WASHBASIN UNIT used on 130A (25415101G) SEE 25-41-51-01G FOR NHA	NP		RF
-001E	D2549020602676		. PANEL ASSY-WASHBASIN UNIT used on 130B (25415101G), 130F (25415101H) SEE 25-41-51-01G FOR NHA SEE 25-41-51-01H FOR NHA	NP		RF
-001F	D2549020602876		. PANEL ASSY-WASHBASIN UNIT used on 130C (25415101G) SEE 25-41-51-01G FOR NHA	NP		RF

- ITEM NOT ILLUSTRATED

FIG. ITEM	PART NUMBER	AIRLINE STOCK NUMBER	NOMENCLATURE 1234567		EFF CODE	UNITS PER ASSY
-001G	D2549020603476		. PANEL ASSY-WASHBASIN UNIT used on 130E (25415101G) SEE 25-41-51-01G FOR NHA	NP		RF
-001H	D2549020603876		. PANEL ASSY-WASHBASIN UNIT used on 130J (25415101G) SEE 25-41-51-01G FOR NHA	NP		RF
-001J	D2549010506876		. PANEL ASSY-WASHBASIN UNIT used on 130E (25415101H), 130B (25415141B) SEE 25-41-51-01H FOR NHA SEE 25-41-51-41B FOR NHA	NP		RF
010A	A225401430-500		. . PANEL ASSY-WASHBASIN UNIT used on 001A			001
-010B	A225401430-508		. . PANEL ASSY-WASHBASIN UNIT used on 001B, 001H			001
-010C	A225401430-510		. . PANEL ASSY-WASHBASIN UNIT used on 001C, 001J			001
-010D	A225401430-522		. . PANEL ASSY-WASHBASIN UNIT used on 001D			001
-010E	A225401430-524		. . PANEL ASSY-WASHBASIN UNIT used on 001E			001
-010F	A225401430-504		. . PANEL ASSY-WASHBASIN UNIT used on 001F			001

- ITEM NOT ILLUSTRATED

FIG. ITEM	PART NUMBER	AIRLINE STOCK NUMBER	NOMENCLATURE 1234567	EFF CODE	UNITS PER ASSY
-010G	A225401430-520		. . PANEL ASSY-WASHBASIN UNIT used on 001G		001
020A	A225400421-000		. . BRACKET-WASHBASIN UNIT used on 001A, 001B, 001C, 001D, 001E, 001F, 001G, 001H, 001J		001
030A	NAS1096-2-8		. . . SCREW BUY PN NAS1801-08-8 used on 020A		002
040A	AN960C8		. . . WASHER BUY PN NAS1149CN832R used on 020A		002
050A	5L0047600102000		. . . PLATE-ADAPTER used on 020A		001
060A	A225400420-000		. . BRACKET-WASHBASIN UNIT used on 001A, 001B, 001C, 001E, 001F, 001G, 001H, 001J		001
-060B	A225400420-002		. . BRACKET-WASHBASIN UNIT used on 001D		001
070A	NAS1096-2-8		. . . SCREW BUY PN NAS1801-08-8 used on 060A		002
080A	AN960C8		. . . WASHER BUY PN NAS1149CN832R used on 060A		002
090A	A225400420-206		. . . BRACKET-WASHBASIN UNIT used on 060A		001

- ITEM NOT ILLUSTRATED

FIG. ITEM	PART NUMBER	AIRLINE STOCK NUMBER	NOMENCLATURE 1234567	EFF CODE	UNITS PER ASSY
100A	NAS1068A08		. . . NUT BUY PN MS21075L08 used on 060A		001
102A	A225400420-208		. . . ANGLE used on 060B		001
104A	NAS1096-2-5		. . . SCREW BUY PN NAS1801-08-5 used on 060B		005
106A	NAS1149CN832R		. . . WASHER used on 060B		005
108A	MS21042-08		. . . NUT used on 060B		005
110A	NAS1096-2-4		. . SCREW BUY PN NAS1801-08-4 used on 001A, 001B, 001C, 001D, 001E, 001F, 001G, 001H, 001J		003
120A	AN960C8		. . WASHER BUY PN NAS1149CN832R used on 001A, 001B, 001C, 001D		018
-120B	NAS1149CN832R		. . WASHER used on 001E, 001F, 001G, 001H, 001J		018
130A	NAS1096-2-5		. . SCREW BUY PN NAS1801-08-5 used on 001A, 001B, 001C, 001D, 001E, 001F, 001G, 001H, 001J		007
140A	A225400435-000		. . HOLDER-ROLL used on 001A, 001B, 001C, 001D, 001E, 001F, 001G, 001H, 001J		002

- ITEM NOT ILLUSTRATED

FIG. ITEM	PART NUMBER	AIRLINE STOCK NUMBER	NOMENCLATURE 1234567	EFF CODE	UNITS PER ASSY
150A	NAS1068A08		. . . NUT BUY PN MS21075L08 used on 140A		002
160A	D2547093801600		. . HOLDER-PAPER ROLL used on 001A		001
-160B	D2547093803400		. . HOLDER-PAPER ROLL used on 001B, 001H		001
-160C	D2547093801400		. . HOLDER-PAPER ROLL used on 001C, 001J		001
-160D	D2547093806400		. . HOLDER-PAPER ROLL used on 001D		001
-160E	D2547093805200		. . HOLDER-PAPER ROLL used on 001E		001
-160F	D2547093800800		. . HOLDER-PAPER ROLL used on 001F		001
-160G	D2547093804600		. . HOLDER-PAPER ROLL used on 001G		001
170A	D2547093815000		. . . ROLLER used on 160A, 160B, 160C, 160D, 160E, 160F, 160G		002
180A	NSA935401-05		. . . TIE-CABLE used on 160A, 160B, 160C, 160D, 160E, 160F, 160G		001
190A	NAS1102-08-7		. . SCREW used on 001A, 001B, 001C, 001D, 001E, 001F, 001G, 001H, 001J		004
200A	A225400423-002		. . PLATE ASSY-PROTECTIVE used on 001A, 001E, 001H, 001J		001

- ITEM NOT ILLUSTRATED

FIG. ITEM	PART NUMBER	AIRLINE STOCK NUMBER	NOMENCLATURE 1234567	EFF CODE	UNITS PER ASSY
-200B	A225400423-208		. . PLATE-PROTECTIVE used on 001B, 001C, 001D, 001F, 001G		001

- ITEM NOT ILLUSTRATED

THIS PAGE IS INTENTIONALLY LEFT BLANK

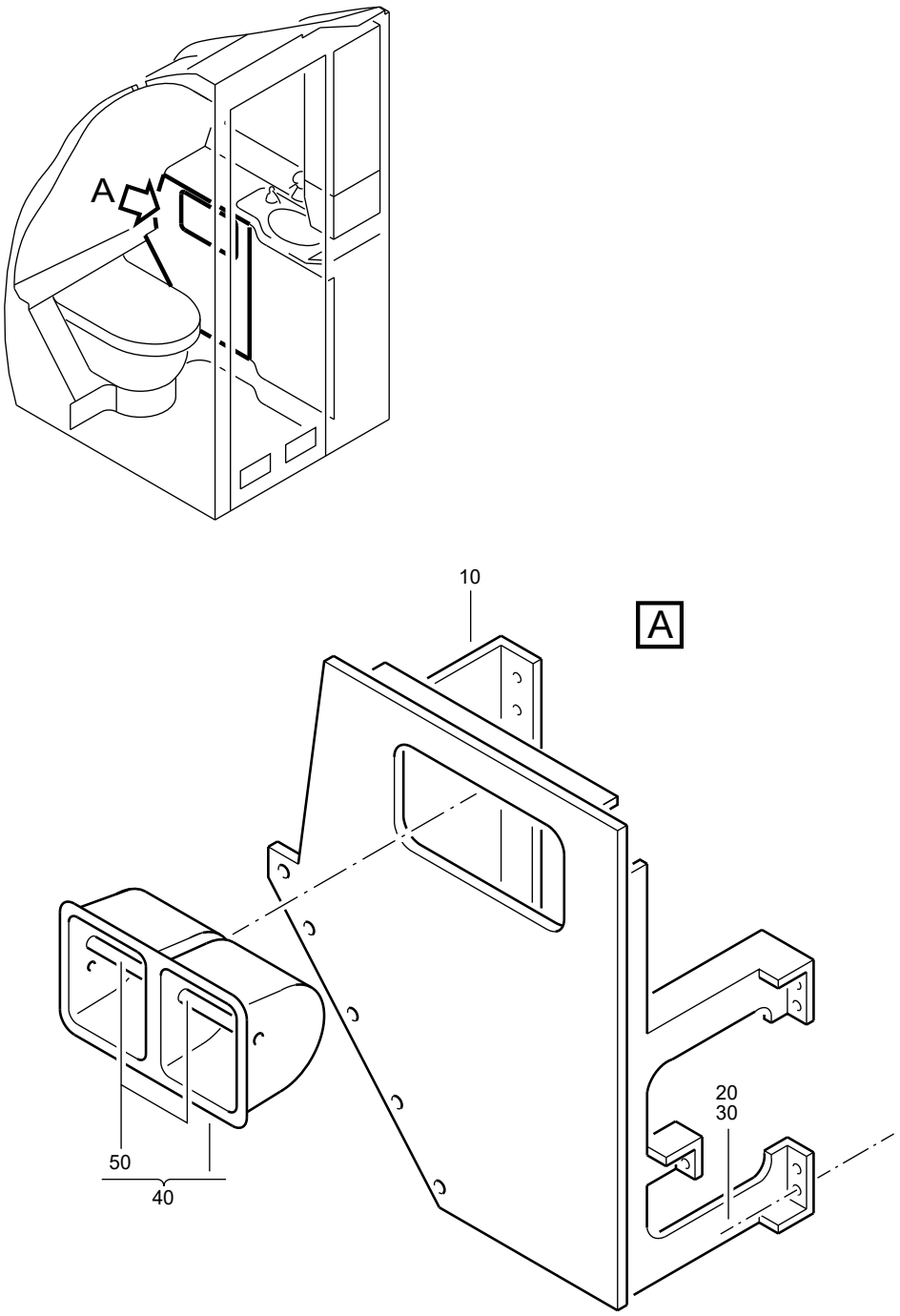

F_PL_254151_17_C_01_00

PANEL ASSY-WASHBASIN UNIT
Figure 17C/EN254151SHEET17C01

FIG. ITEM	PART NUMBER	AIRLINE STOCK NUMBER	NOMENCLATURE 1234567	EFF CODE	UNITS PER ASSY
17C -001A	D2549030504876		. PANEL ASSY-WASHBASIN UNIT NP PRE VSB A2-254-25-106 PRE VSB A2-254-25-130 used on 130A (25415101J), 130C (25415101K), 130D(25415101L), 130A (25415101M), 130B (25415101N), 130E(25415101P), 130D (25415101Q), 130B (25415101S), 130A(25415101T), 130A (25415101U), 130A (25415101V), 130A (25415101W), 130G (25415101X), 130A (25415101Y), 130C(25415101Z), 130B (254151410), 130A (25415141A), 130A(25415141B), 130B (25415141C), 130A (25415141D), 130B(25415141F), 130C (25415141G), 130B (25415141H), 130A(25415141J), 130C (25415141K), 130B (25415141L), 130C(25415141M), 130D (25415141N), 130A (25415141P), 140A(25415141Q), 130B (25415141R), 130B (25415141S), 130B(25415141T), 130B (25415141U), 130A (25415141V), 130E (25415141W), 130B (25415141X), 130B (25415141Y), 130A(25415141Z), 130C (254151420), 130D (25415142A), 130C(25415142B), 130C (25415142C), 130A (25415142D), 130D(25415142E), 130A (25415142F), 130A (25415142G), 130D(25415142H),		RF

- ITEM NOT ILLUSTRATED

FIG. ITEM	PART NUMBER	AIRLINE STOCK NUMBER	NOMENCLATURE 1234567	EFF CODE	UNITS PER ASSY
			130B (25415142J), 130A (25415142K), 130B(25415142L), 130C (25415142M), 130A (25415142N), 130B(25415142P), 130A (25415142Q), 130B (25415142R), 130C(25415142S), 130B (25415142T), 130A (25415142U) SEE 25-41-51-01J FOR NHA SEE 25-41-51-01K FOR NHA SEE 25-41-51-01L FOR NHA SEE 25-41-51-01M FOR NHA SEE 25-41-51-01N FOR NHA SEE 25-41-51-01P FOR NHA SEE 25-41-51-01Q FOR NHA SEE 25-41-51-01S FOR NHA SEE 25-41-51-01T FOR NHA SEE 25-41-51-01U FOR NHA SEE 25-41-51-01V FOR NHA SEE 25-41-51-01W FOR NHA SEE 25-41-51-01X FOR NHA SEE 25-41-51-01Y FOR NHA SEE 25-41-51-01Z FOR NHA SEE 25-41-51-410 FOR NHA SEE 25-41-51-41A FOR NHA SEE 25-41-51-41B FOR NHA SEE 25-41-51-41C FOR NHA SEE 25-41-51-41D FOR NHA SEE 25-41-51-41F FOR NHA SEE 25-41-51-41G FOR NHA SEE 25-41-51-41H FOR NHA SEE 25-41-51-41J FOR NHA SEE 25-41-51-41K FOR NHA SEE 25-41-51-41L FOR NHA SEE 25-41-51-41M FOR NHA SEE 25-41-51-41N FOR NHA SEE 25-41-51-41P FOR NHA SEE 25-41-51-41Q FOR NHA SEE 25-41-51-41R FOR NHA SEE 25-41-51-41S FOR NHA		

- ITEM NOT ILLUSTRATED

FIG. ITEM	PART NUMBER	AIRLINE STOCK NUMBER	NOMENCLATURE 1234567	EFF CODE	UNITS PER ASSY
			SEE 25-41-51-41T FOR NHA SEE 25-41-51-41U FOR NHA SEE 25-41-51-41V FOR NHA SEE 25-41-51-41W FOR NHA SEE 25-41-51-41X FOR NHA SEE 25-41-51-41Y FOR NHA SEE 25-41-51-41Z FOR NHA SEE 25-41-51-420 FOR NHA SEE 25-41-51-42A FOR NHA SEE 25-41-51-42B FOR NHA SEE 25-41-51-42C FOR NHA SEE 25-41-51-42D FOR NHA SEE 25-41-51-42E FOR NHA SEE 25-41-51-42F FOR NHA SEE 25-41-51-42G FOR NHA SEE 25-41-51-42H FOR NHA SEE 25-41-51-42J FOR NHA SEE 25-41-51-42K FOR NHA SEE 25-41-51-42L FOR NHA SEE 25-41-51-42M FOR NHA SEE 25-41-51-42N FOR NHA SEE 25-41-51-42P FOR NHA SEE 25-41-51-42Q FOR NHA SEE 25-41-51-42R FOR NHA SEE 25-41-51-42S FOR NHA SEE 25-41-51-42T FOR NHA SEE 25-41-51-42U FOR NHA		

- ITEM NOT ILLUSTRATED

FIG. ITEM	PART NUMBER	AIRLINE STOCK NUMBER	NOMENCLATURE 1234567	EFF CODE	UNITS PER ASSY
-001B	D2549020506276		. PANEL ASSY-WASHBASIN NP UNIT used on 130C (25415101J), 130D (25415101K), 130D(25415101M), 130A (25415101P), 130B (25415101Q), 130D(25415101T), 130C (25415101V), 130E (25415101W), 130B(25415101Y), 130D (25415141B), 130E (25415141D), 130D(25415141G), 130D (25415141H), 130D (25415141K), 130D(25415141M), 130C (25415141N), 130C (25415141T), 130D(25415141W), 130E (25415141X), 130A (254151420), 130E(25415142E) SEE 25-41-51-01J FOR NHA SEE 25-41-51-01K FOR NHA SEE 25-41-51-01M FOR NHA SEE 25-41-51-01P FOR NHA SEE 25-41-51-01Q FOR NHA SEE 25-41-51-01T FOR NHA SEE 25-41-51-01V FOR NHA SEE 25-41-51-01W FOR NHA SEE 25-41-51-01Y FOR NHA SEE 25-41-51-41B FOR NHA SEE 25-41-51-41D FOR NHA SEE 25-41-51-41G FOR NHA SEE 25-41-51-41H FOR NHA SEE 25-41-51-41K FOR NHA SEE 25-41-51-41M FOR NHA SEE 25-41-51-41N FOR NHA SEE 25-41-51-41T FOR NHA SEE 25-41-51-41W FOR NHA SEE 25-41-51-41X FOR NHA SEE 25-41-51-420 FOR NHA SEE 25-41-51-42E FOR NHA		RF

- ITEM NOT ILLUSTRATED

FIG. ITEM	PART NUMBER	AIRLINE STOCK NUMBER	NOMENCLATURE 1234567	EFF CODE	UNITS PER ASSY
-001C	D2549010509476		. PANEL ASSY-WASHBASIN UNIT NP used on 130D (25415101J), 130A (25415101K), 130A(25415101L), 130A (25415101N), 130C (25415101P), 130C(25415101Q), 130B (25415101R), 130F (25415101W), 130A(25415101X), 130C (25415101Y), 130A (25415141C), 130F(25415141D), 130A (25415141G), 130A (25415141H), 130A(25415141R) SEE 25-41-51-01J FOR NHA SEE 25-41-51-01K FOR NHA SEE 25-41-51-01L FOR NHA SEE 25-41-51-01N FOR NHA SEE 25-41-51-01P FOR NHA SEE 25-41-51-01Q FOR NHA SEE 25-41-51-01R FOR NHA SEE 25-41-51-01W FOR NHA SEE 25-41-51-01X FOR NHA SEE 25-41-51-01Y FOR NHA SEE 25-41-51-41C FOR NHA SEE 25-41-51-41D FOR NHA SEE 25-41-51-41G FOR NHA SEE 25-41-51-41H FOR NHA SEE 25-41-51-41R FOR NHA		RF
-001D	D2549010510476		. PANEL ASSY-WASHBASIN UNIT NP used on 130E (25415101J) SEE 25-41-51-01J FOR NHA		RF

- ITEM NOT ILLUSTRATED

FIG. ITEM	PART NUMBER	AIRLINE STOCK NUMBER	NOMENCLATURE 1234567	EFF CODE	UNITS PER ASSY
-001E	D2549030504676		. PANEL ASSY-WASHBASIN NP UNIT used on 130B (25415101K), 130D (25415101U), 130D (25415101X), 130D (25415141C), 130C (25415141Z), 130E(25415142A), 130F (25415142H), 130A (25415142L), 130F(25415142Q), 130G (25415142U) SEE 25-41-51-01K FOR NHA SEE 25-41-51-01U FOR NHA SEE 25-41-51-01X FOR NHA SEE 25-41-51-41C FOR NHA SEE 25-41-51-41Z FOR NHA SEE 25-41-51-42A FOR NHA SEE 25-41-51-42H FOR NHA SEE 25-41-51-42L FOR NHA SEE 25-41-51-42Q FOR NHA SEE 25-41-51-42U FOR NHA		RF

- ITEM NOT ILLUSTRATED

FIG. ITEM	PART NUMBER	AIRLINE STOCK NUMBER	NOMENCLATURE 1234567	EFF CODE	UNITS PER ASSY
-001F	D2549030506076		. PANEL ASSY-WASHBASIN UNIT NP used on 130A (25415101Q), 130E (25415101S), 130B (25415101V), 130B (25415101W), 130D (25415101Z), 130C(25415141B), 130D (25415141D), 130B (25415141G), 130E(25415141M), 130A (25415141N), 130C (25415141W), 130E(25415142D), 130C (25415142L), 130F (25415142S) SEE 25-41-51-01Q FOR NHA SEE 25-41-51-01S FOR NHA SEE 25-41-51-01V FOR NHA SEE 25-41-51-01W FOR NHA SEE 25-41-51-01Z FOR NHA SEE 25-41-51-41B FOR NHA SEE 25-41-51-41D FOR NHA SEE 25-41-51-41G FOR NHA SEE 25-41-51-41M FOR NHA SEE 25-41-51-41N FOR NHA SEE 25-41-51-41W FOR NHA SEE 25-41-51-42D FOR NHA SEE 25-41-51-42L FOR NHA SEE 25-41-51-42S FOR NHA		RF
-001G	D2549010511476		. PANEL ASSY-WASHBASIN UNIT NP used on 130E (25415101K), 130E (25415101L), 130C(25415101S), 130D (25415142Q), 130E (25415142U) SEE 25-41-51-01K FOR NHA SEE 25-41-51-01L FOR NHA SEE 25-41-51-01S FOR NHA SEE 25-41-51-42Q FOR NHA SEE 25-41-51-42U FOR NHA		RF

- ITEM NOT ILLUSTRATED

FIG. ITEM	PART NUMBER	AIRLINE STOCK NUMBER	NOMENCLATURE 1234567	EFF CODE	UNITS PER ASSY
-001H	D2549010510876		. PANEL ASSY-WASHBASIN NP UNIT used on 130F (25415101K), 130C (25415101N), 130D(25415101P), 130B (25415101T), 130D (25415101V), 130D(25415101Y), 130D (25415141F), 130E (25415141G) SEE 25-41-51-01K FOR NHA SEE 25-41-51-01N FOR NHA SEE 25-41-51-01P FOR NHA SEE 25-41-51-01T FOR NHA SEE 25-41-51-01V FOR NHA SEE 25-41-51-01Y FOR NHA SEE 25-41-51-41F FOR NHA SEE 25-41-51-41G FOR NHA		RF

- ITEM NOT ILLUSTRATED

FIG. ITEM	PART NUMBER	AIRLINE STOCK NUMBER	NOMENCLATURE 1234567	EFF CODE	UNITS PER ASSY
-001J	D2549020607676		. PANEL ASSY-WASHBASIN UNIT NP used on 130B (25415101L), 130C (25415101M), 130F(25415101P), 130C (25415101T), 130C (25415101W), 130E(25415101X), 130A (25415101Z), 130A (254151410), 130C(25415141A), 130E (25415141C), 130B (25415141D), 130C(25415141F), 130C (25415141J), 130A (25415141K), 130A(25415141L), 130A (25415141M), 130E (25415141N), 130B(25415141P), 130E (25415141R), 130A (25415141S), 130A(25415141T), 130C (25415141U), 130B (25415141V), 130F(25415141W), 130F (25415141X), 130A (25415141Y), 130E(25415141Z), 130F (254151420), 130A (25415142A), 130A(25415142B), 130A (25415142C), 130C (25415142D), 130B(25415142E), 130C (25415142F), 130C (25415142G), 130B(25415142H), 130A (25415142J), 130E (25415142L), 130B(25415142M), 130C (25415142P), 130C (25415142Q), 130D(25415142T) SEE 25-41-51-01L FOR NHA SEE 25-41-51-01M FOR NHA SEE 25-41-51-01P FOR NHA SEE 25-41-51-01T FOR NHA SEE 25-41-51-01W FOR NHA SEE 25-41-51-01X FOR NHA SEE 25-41-51-01Z FOR NHA SEE 25-41-51-410 FOR NHA SEE 25-41-51-41A FOR NHA SEE 25-41-51-41C FOR NHA		RF

- ITEM NOT ILLUSTRATED

FIG. ITEM	PART NUMBER	AIRLINE STOCK NUMBER	NOMENCLATURE 1234567	EFF CODE	UNITS PER ASSY
			SEE 25-41-51-41D FOR NHA SEE 25-41-51-41F FOR NHA SEE 25-41-51-41J FOR NHA SEE 25-41-51-41K FOR NHA SEE 25-41-51-41L FOR NHA SEE 25-41-51-41M FOR NHA SEE 25-41-51-41N FOR NHA SEE 25-41-51-41P FOR NHA SEE 25-41-51-41R FOR NHA SEE 25-41-51-41S FOR NHA SEE 25-41-51-41T FOR NHA SEE 25-41-51-41U FOR NHA SEE 25-41-51-41V FOR NHA SEE 25-41-51-41W FOR NHA SEE 25-41-51-41X FOR NHA SEE 25-41-51-41Y FOR NHA SEE 25-41-51-41Z FOR NHA SEE 25-41-51-420 FOR NHA SEE 25-41-51-42A FOR NHA SEE 25-41-51-42B FOR NHA SEE 25-41-51-42C FOR NHA SEE 25-41-51-42D FOR NHA SEE 25-41-51-42E FOR NHA SEE 25-41-51-42F FOR NHA SEE 25-41-51-42G FOR NHA SEE 25-41-51-42H FOR NHA SEE 25-41-51-42J FOR NHA SEE 25-41-51-42L FOR NHA SEE 25-41-51-42M FOR NHA SEE 25-41-51-42P FOR NHA SEE 25-41-51-42Q FOR NHA SEE 25-41-51-42T FOR NHA		

- ITEM NOT ILLUSTRATED

FIG. ITEM	PART NUMBER	AIRLINE STOCK NUMBER	NOMENCLATURE 1234567	EFF CODE	UNITS PER ASSY
-001K	D2549030506276		. PANEL ASSY-WASHBASIN UNIT NP used on 130C (25415101L), 130B (25415101M), 130B(25415101U), 130B (25415101X), 130B (25415101Z), 130C(25415141D), 130B (25415141K), 130D (25415141R), 130A(25415141X), 130E (25415142J), 130G (25415142N), 130A(25415142P) SEE 25-41-51-01L FOR NHA SEE 25-41-51-01M FOR NHA SEE 25-41-51-01U FOR NHA SEE 25-41-51-01X FOR NHA SEE 25-41-51-01Z FOR NHA SEE 25-41-51-41D FOR NHA SEE 25-41-51-41K FOR NHA SEE 25-41-51-41R FOR NHA SEE 25-41-51-41X FOR NHA SEE 25-41-51-42J FOR NHA SEE 25-41-51-42N FOR NHA SEE 25-41-51-42P FOR NHA		RF
-001L	D2549020611676		. PANEL ASSY-WASHBASIN UNIT NP used on 130D (25415101S), 130H (254151410) SEE 25-41-51-01S FOR NHA SEE 25-41-51-410 FOR NHA		RF

- ITEM NOT ILLUSTRATED

FIG. ITEM	PART NUMBER	AIRLINE STOCK NUMBER	NOMENCLATURE 1234567		EFF CODE	UNITS PER ASSY
-001M	D2549020610276		. PANEL ASSY-WASHBASIN UNIT used on 130E (25415101N), 130A (25415101S), 130D (25415101W), 130E (25415101Y), 130E (254151410), 130F(25415141G), 130D (25415141P), 130E (25415142G), 130A(25415142H) SEE 25-41-51-01N FOR NHA SEE 25-41-51-01S FOR NHA SEE 25-41-51-01W FOR NHA SEE 25-41-51-01Y FOR NHA SEE 25-41-51-410 FOR NHA SEE 25-41-51-41G FOR NHA SEE 25-41-51-41P FOR NHA SEE 25-41-51-42G FOR NHA SEE 25-41-51-42H FOR NHA	NP		RF
-001N	D2547160005676		. PANEL ASSY-WASHBASIN UNIT POST SB 25-1574 used on 130G (25415141G) SEE 25-41-51-41G FOR NHA	NP		RF
-001P	R22540166200076		. PANEL ASSY-WASHBASIN UNIT POST VSB A2-254-25-106 used on 130E (25415142C), 130H (25415142G) SEE 25-41-51-042C FOR NHA SEE 25-41-51-042G FOR NHA	NP		RF
-001Q	R22540168900476		. PANEL ASSY-WASHBASIN UNIT POST VSB A2-254-25-106 used on 130H (25415142L), 130F (25415142T) SEE 25-41-51-042L FOR NHA SEE 25-41-51-042T FOR NHA	NP		RF

- ITEM NOT ILLUSTRATED

FIG. ITEM	PART NUMBER	AIRLINE STOCK NUMBER	NOMENCLATURE 1234567	EFF CODE	UNITS PER ASSY
-001R	R22540119604676		. PANEL ASSY-WASHBASIN UNIT NP POST VSB A2-254-25-130 used on 130J (254151410), 130E (25415141K), 130G (25415141N), 130F (25415141R), 130G (25415141W), 130G (25415141X), 130G (254151420), 130G (25415142E), 130G (25415142J) SEE 25-41-51-410 FOR NHA SEE 25-41-51-41K FOR NHA SEE 25-41-51-41N FOR NHA SEE 25-41-51-41R FOR NHA SEE 25-41-51-41W FOR NHA SEE 25-41-51-41X FOR NHA SEE 25-41-51-420 FOR NHA SEE 25-41-51-42E FOR NHA SEE 25-41-51-42J FOR NHA		RF
010A	A225400437-510		. . PANEL ASSY-WASHBASIN UNIT PRE VSB A2-254-25-106 used on 001A, 001L, 001R		001
-010B	A225400437-504		. . PANEL ASSY-WASHBASIN UNIT used on 001B		001
-010C	A225400437-502		. . PANEL ASSY-WASHBASIN UNIT used on 001C		001
-010D	A225400437-522		. . PANEL ASSY-WASHBASIN UNIT used on 001D		001
-010E	A225400437-500		. . PANEL ASSY-WASHBASIN UNIT used on 001E, 001H		001

- ITEM NOT ILLUSTRATED

FIG. ITEM	PART NUMBER	AIRLINE STOCK NUMBER	NOMENCLATURE 1234567	EFF CODE	UNITS PER ASSY
-010F	A225400437-526		. . PANEL ASSY-WASHBASIN UNIT used on 001F		001
-010G	A225400437-506		. . PANEL ASSY-WASHBASIN UNIT used on 001G		001
-010H	A225400437-520		. . PANEL ASSY-WASHBASIN UNIT used on 001J		001
-010J	A225400437-528		. . PANEL ASSY-WASHBASIN UNIT used on 001K		001
-010K	A225400437-532		. . PANEL ASSY-WASHBASIN UNIT used on 001M		001
-010L	A225400437-524		. . PANEL ASSY-WASHBASIN UNIT used on 001N		001
-010M	A225400437-914		. . PANEL ASSY-WASHBASIN UNIT POST VSB A2-254-25-106 used on 001P, 001Q		001
020A	NAS1096-2-7		. . SCREW BUY PN NAS1801-08-7 PRE VSB A2-254-25-106 PRE VSB A2-254-25-130 used on 001A, 001B, 001C, 001D, 001E, 001F, 001G, 001H, 001J, 001K, 001L, 001M, 001N		009
-020B	NAS1801-08-7		. . SCREW POST VSB A2-254-25-106 POST VSB A2-254-25-130 used on 001R, 001P, 001Q		009

- ITEM NOT ILLUSTRATED

FIG. ITEM	PART NUMBER	AIRLINE STOCK NUMBER	NOMENCLATURE 1234567	EFF CODE	UNITS PER ASSY
030A	ASNA0113-40ADL		. . WASHER used on 001A, 001B, 001C, 001D, 001E, 001F, 001G, 001H, 001J, 001K, 001L, 001M, 001N, 001P, 001Q, 001R		009
040A	A225400434-562		. . HOLDER ASSY-PAPER ROLL BUY PN A225400434-704 PRE VSB A2-254-25-106 used on 001A, 001H, 001R		001
-040B	A225400434-554		. . HOLDER ASSY-PAPER ROLL used on 001B		001
-040C	A225400434-552		. . HOLDER ASSY-PAPER ROLL used on 001C		001
-040D	A225400434-576		. . HOLDER ASSY-PAPER ROLL BUY PN A225400434-726 used on 001D		001
-040E	A225400434-550		. . HOLDER ASSY-PAPER ROLL used on 001E		001
-040F	A225400434-588		. . HOLDER ASSY-PAPER ROLL BUY PN A225400434-724 used on 001F		001
-040G	A225400434-556		. . HOLDER ASSY-PAPER ROLL used on 001G		001
-040H	A225400434-558		. . HOLDER ASSY-PAPER ROLL BUY PN A225400434-712 used on 001K		001
-040J	A225400434-574		. . HOLDER ASSY-PAPER ROLL BUY PN A225400434-710 used on 001J		001
-040K	A225400434-590		. . HOLDER ASSY-PAPER ROLL used on 001L		001

- ITEM NOT ILLUSTRATED

FIG. ITEM	PART NUMBER	AIRLINE STOCK NUMBER	NOMENCLATURE 1234567	EFF CODE	UNITS PER ASSY
-040L	A225400434-592		. . HOLDER ASSY-PAPER ROLL used on 001M		001
-040M	A225400434-578		. . HOLDER ASSY-PAPER ROLL BUY PN A225400434-700 used on 001N		001
-040N	A225400434-634		. . HOLDER ASSY-PAPER ROLL POST VSB A2-254-25-106 used on 001P, 001Q		001
050A	D2547093815000		. . . ROLLER used on 040A, 040B, 040C, 040D, 040E, 040F, 040G, 040H, 040J, 040K, 040L, 040M, 040N		002
-060A	NSA935401-05		. . . TIE-CABLE used on 040A, 040B, 040C, 040D, 040E, 040F, 040G, 040H, 040J, 040K, 040L, 040M, 040N		001

- ITEM NOT ILLUSTRATED

THIS PAGE IS INTENTIONALLY LEFT BLANK

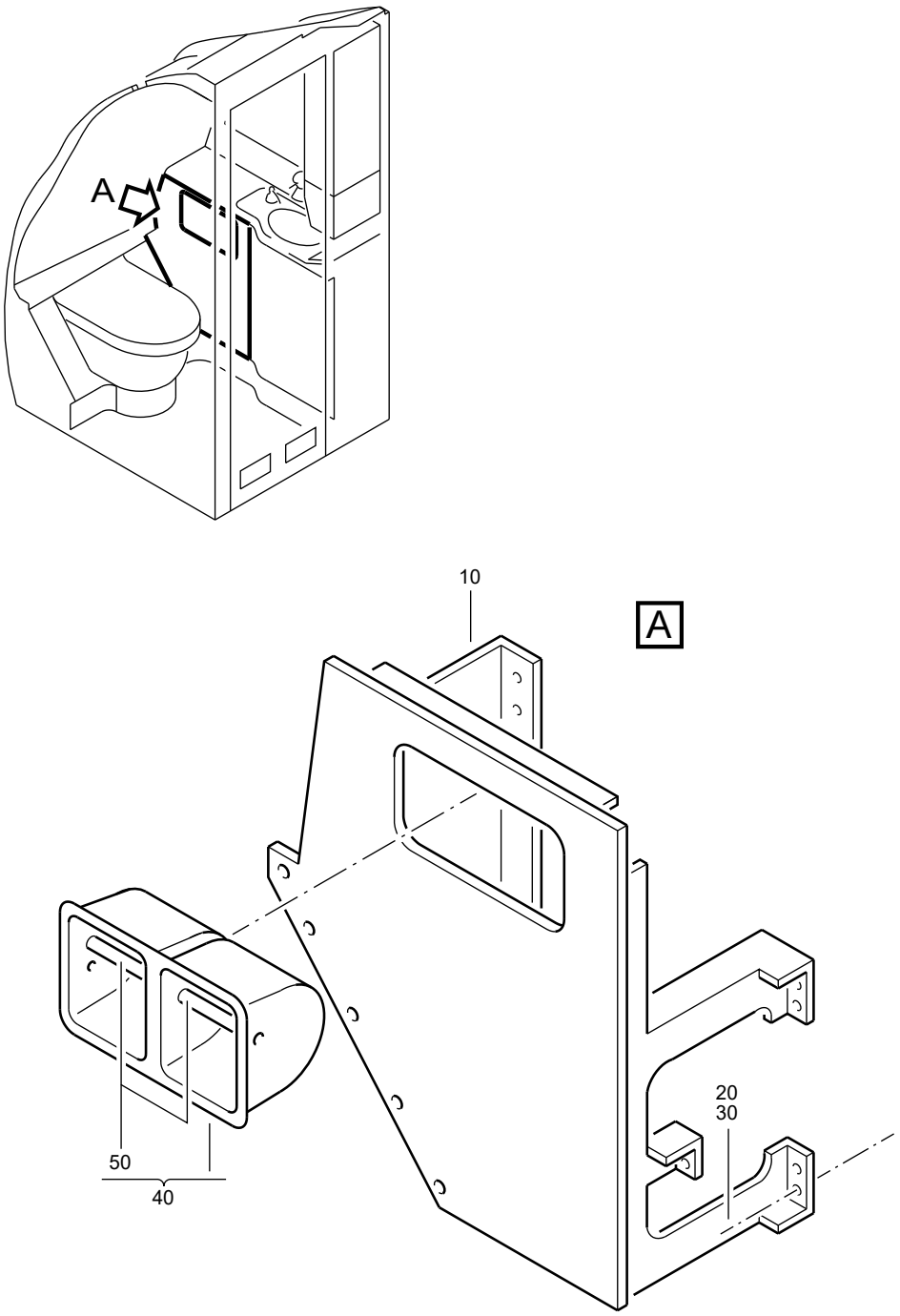

F_PL_254151_17_D_01_00

PANEL ASSY-WASHBASIN UNIT
Figure 17D/EN254151SHEET17D01

FIG. ITEM	PART NUMBER	AIRLINE STOCK NUMBER	NOMENCLATURE 1234567	EFF CODE	UNITS PER ASSY
17D -001A	D2549030507276		. PANEL ASSY-WASHBASIN UNIT NP used on 130D (25415101N), 130E (25415101Q), 130E (25415101U), 130C (25415101X), 130F (25415101Y), 130C(25415141C), 130A (25415141F), 130E (25415141H), 130F(25415141N), 130B (25415141W), 130C (25415141X), 130B(254151420) SEE 25-41-51-01N FOR NHA SEE 25-41-51-01Q FOR NHA SEE 25-41-51-01U FOR NHA SEE 25-41-51-01X FOR NHA SEE 25-41-51-01Y FOR NHA SEE 25-41-51-41C FOR NHA SEE 25-41-51-41F FOR NHA SEE 25-41-51-41H FOR NHA SEE 25-41-51-41N FOR NHA SEE 25-41-51-41W FOR NHA SEE 25-41-51-41X FOR NHA SEE 25-41-51-420 FOR NHA		RF

- ITEM NOT ILLUSTRATED

FIG. ITEM	PART NUMBER	AIRLINE STOCK NUMBER	NOMENCLATURE 1234567		EFF CODE	UNITS PER ASSY
-001B	D2549020605476		. PANEL ASSY-WASHBASIN UNIT used on 130B (25415101P), 130G (25415101Y), 130D (25415141J), 130A (25415141U), 130B (25415141Z), 130B (25415142C), 130G (25415142G), 130E (25415142H), 130G(25415142L), 130D (25415142M), 130C (25415142N), 130D(25415142R), 130B (25415142S), 130A (25415142T) SEE 25-41-51-01P FOR NHA SEE 25-41-51-01Y FOR NHA SEE 25-41-51-41J FOR NHA SEE 25-41-51-41U FOR NHA SEE 25-41-51-41Z FOR NHA SEE 25-41-51-42C FOR NHA SEE 25-41-51-42G FOR NHA SEE 25-41-51-42H FOR NHA SEE 25-41-51-42L FOR NHA SEE 25-41-51-42M FOR NHA SEE 25-41-51-42N FOR NHA SEE 25-41-51-42R FOR NHA SEE 25-41-51-42S FOR NHA SEE 25-41-51-42T FOR NHA	NP		RF
-001C	D2549020604676		. PANEL ASSY-WASHBASIN UNIT used on 130A (25415101R) SEE 25-41-51-01R FOR NHA	NP		RF
-001D	D2549010514476		. PANEL ASSY-WASHBASIN UNIT used on 130F (25415101Q), 130C (25415142J) SEE 25-41-51-01Q FOR NHA SEE 25-41-51-42J FOR NHA	NP		RF

- ITEM NOT ILLUSTRATED

FIG. ITEM	PART NUMBER	AIRLINE STOCK NUMBER	NOMENCLATURE 1234567	EFF CODE	UNITS PER ASSY
-001E	D2549030511076		. PANEL ASSY-WASHBASIN NP UNIT used on 130C (25415101U), 130F (25415101X), 130F (254151410), 130F (25415141A), 130F (25415141P), 130A (25415141W), 130E (254151420), 130B (25415142A), 130C(25415142E), 130F (25415142G), 130D (25415142J), 130C(25415142K), 130D (25415142P), 130E (25415142Q), 130A(25415142R), 130D (25415142U) SEE 25-41-51-01U FOR NHA SEE 25-41-51-01X FOR NHA SEE 25-41-51-410 FOR NHA SEE 25-41-51-41A FOR NHA SEE 25-41-51-41P FOR NHA SEE 25-41-51-41W FOR NHA SEE 25-41-51-420 FOR NHA SEE 25-41-51-42A FOR NHA SEE 25-41-51-42E FOR NHA SEE 25-41-51-42G FOR NHA SEE 25-41-51-42J FOR NHA SEE 25-41-51-42K FOR NHA SEE 25-41-51-42P FOR NHA SEE 25-41-51-42Q FOR NHA SEE 25-41-51-42R FOR NHA SEE 25-41-51-42U FOR NHA		RF

- ITEM NOT ILLUSTRATED

FIG. ITEM	PART NUMBER	AIRLINE STOCK NUMBER	NOMENCLATURE 1234567	EFF CODE	UNITS PER ASSY
-001F	D2549010603676		. PANEL ASSY-WASHBASIN NP UNIT used on 130D (254151410), 130E (25415141A), 130C(25415141L), 130E (25415141P), 130D (25415141V), 130D(25415141X), 130D (25415141Z), 130D (254151420), 130C(25415142A), 130B (25415142B), 130D (25415142C), 130B(25415142D), 130B (25415142F), 130C (25415142H), 130D(25415142L), 130F (25415142M), 130C (25415142U) SEE 25-41-51-410 FOR NHA SEE 25-41-51-41A FOR NHA SEE 25-41-51-41L FOR NHA SEE 25-41-51-41P FOR NHA SEE 25-41-51-41V FOR NHA SEE 25-41-51-41X FOR NHA SEE 25-41-51-41Z FOR NHA SEE 25-41-51-420 FOR NHA SEE 25-41-51-42A FOR NHA SEE 25-41-51-42B FOR NHA SEE 25-41-51-42C FOR NHA SEE 25-41-51-42D FOR NHA SEE 25-41-51-42F FOR NHA SEE 25-41-51-42H FOR NHA SEE 25-41-51-42L FOR NHA SEE 25-41-51-42M FOR NHA SEE 25-41-51-42U FOR NHA		RF

- ITEM NOT ILLUSTRATED

FIG. ITEM	PART NUMBER	AIRLINE STOCK NUMBER	NOMENCLATURE 1234567	EFF CODE	UNITS PER ASSY
-001G	D2549020710076		. PANEL ASSY-WASHBASIN UNIT NP used on 130B (25415141A), 130B (25415141J), 130C(25415141V), 130C (25415141Y), 130B (25415142K), 130F(25415142L), 130C (25415142R), 130C (25415142T) SEE 25-41-51-41A FOR NHA SEE 25-41-51-41J FOR NHA SEE 25-41-51-41V FOR NHA SEE 25-41-51-41Y FOR NHA SEE 25-41-51-42K FOR NHA SEE 25-41-51-42L FOR NHA SEE 25-41-51-42R FOR NHA SEE 25-41-51-42T FOR NHA		RF
-001H	D2549010604876		. PANEL ASSY-WASHBASIN UNIT NP used on 130E (25415101T), 130C (254151410), 130D(25415141A), 130C (25415141H), 130B (25415141M), 130B(25415141N), 130F (25415142E), 130F (25415142J), 130D(25415142K), 130B (25415142N), 130F (25415142R) SEE 25-41-51-01T FOR NHA SEE 25-41-51-410 FOR NHA SEE 25-41-51-41A FOR NHA SEE 25-41-51-41H FOR NHA SEE 25-41-51-41M FOR NHA SEE 25-41-51-41N FOR NHA SEE 25-41-51-42E FOR NHA SEE 25-41-51-42J FOR NHA SEE 25-41-51-42K FOR NHA SEE 25-41-51-42N FOR NHA SEE 25-41-51-42R FOR NHA		RF

- ITEM NOT ILLUSTRATED

FIG. ITEM	PART NUMBER	AIRLINE STOCK NUMBER	NOMENCLATURE 1234567	EFF CODE	UNITS PER ASSY
-001J	D2549010609876		. PANEL ASSY-WASHBASIN UNIT NP used on 130C (25415141P), 130D (25415142D), 130D (25415142G), 130E (25415142M), 130B (25415142Q), 130A(25415142S), 130B (25415142U) SEE 25-41-51-41P FOR NHA SEE 25-41-51-42D FOR NHA SEE 25-41-51-42G FOR NHA SEE 25-41-51-42M FOR NHA SEE 25-41-51-42Q FOR NHA SEE 25-41-51-42S FOR NHA SEE 25-41-51-42U FOR NHA		RF
-001K	D2549020510676		. PANEL ASSY-WASHBASIN UNIT NP used on 130C (25415141R), 130A (25415142E) SEE 25-41-51-41R FOR NHA SEE 25-41-51-42E FOR NHA		RF
-001L	D2549030409676		. PANEL ASSY-WASHBASIN UNIT NP used on 130B (25415142G), 130D (25415142N), 130D (25415142S) SEE 25-41-51-42G FOR NHA SEE 25-41-51-42N FOR NHA SEE 25-41-51-42S FOR NHA		RF
-001M	D2549020409476		. PANEL ASSY-WASHBASIN UNIT NP used on 130A (25415142M) SEE 25-41-51-42M FOR NHA		RF
010A	A225400437-530		. . PANEL ASSY-WASHBASIN UNIT used on 001A		001

- ITEM NOT ILLUSTRATED

FIG. ITEM	PART NUMBER	AIRLINE STOCK NUMBER	NOMENCLATURE 1234567	EFF CODE	UNITS PER ASSY
-010B	A225400437-524		. . PANEL ASSY-WASHBASIN UNIT used on 001B		001
-010C	A225400437-518		. . PANEL ASSY-WASHBASIN UNIT used on 001C		001
-010D	A225400437-510		. . PANEL ASSY-WASHBASIN UNIT used on 001E, 001L		001
-010E	A225400437-574		. . PANEL ASSY-WASHBASIN UNIT used on 001M		001
-010F	A225400437-536		. . PANEL ASSY-WASHBASIN UNIT used on 001F		001
-010G	A225400437-538		. . PANEL ASSY-WASHBASIN UNIT used on 001G		001
-010H	A225400437-602		. . PANEL ASSY-WASHBASIN UNIT used on 001H		001
-010J	A225400437-508		. . PANEL ASSY-WASHBASIN UNIT used on 001J		001
-010K	A225400437-528		. . PANEL ASSY-WASHBASIN UNIT used on 001D, 001K		001
020A	NAS1096-2-7		. . SCREW BUY PN NAS1801-08-7 used on 001A, 001B, 001C, 001D, 001E, 001F, 001G, 001H, 001J, 001K, 001L, 001M		009

- ITEM NOT ILLUSTRATED

FIG. ITEM	PART NUMBER	AIRLINE STOCK NUMBER	NOMENCLATURE 1234567	EFF CODE	UNITS PER ASSY
030A	ASNA0113-40ADL		. . WASHER used on 001A, 001B, 001C, 001D, 001E, 001F, 001G, 001H, 001J, 001K, 001L, 001M		009
040A	A225400434-582		. . HOLDER ASSY-PAPER ROLL BUY PN A225400434-716 used on 001A		001
-040B	A225400434-578		. . HOLDER ASSY-PAPER ROLL BUY PN A225400434-700 used on 001B, 001M		001
-040C	A225400434-572		. . HOLDER ASSY-PAPER ROLL used on 001C		001
-040D	A225400434-558		. . HOLDER ASSY-PAPER ROLL BUY PN A225400434-712 used on 001D		001
-040E	A225400434-562		. . HOLDER ASSY-PAPER ROLL BUY PN A225400434-704 used on 001E		001
-040F	A225400434-580		. . HOLDER ASSY-PAPER ROLL used on 001F		001
-040G	A225400434-600		. . HOLDER ASSY-PAPER ROLL BUY PN A225400434-706 used on 001G, 001K		001
-040H	A225400434-576		. . HOLDER ASSY-PAPER ROLL BUY PN A225400434-726 used on 001H		001
-040J	A225400434-560		. . HOLDER ASSY-PAPER ROLL BUY PN A225400434-702 used on 001J		001

- ITEM NOT ILLUSTRATED

FIG. ITEM	PART NUMBER	AIRLINE STOCK NUMBER	NOMENCLATURE 1234567	EFF CODE	UNITS PER ASSY
-040K	A225400434-608		. . HOLDER ASSY-PAPER ROLL BUY PN A225400434-714 used on 001L		001
050A	D2547093815000		. . . ROLLER used on 040A, 040B, 040C, 040D, 040E, 040F, 040G, 040H, 040J, 040K		002
-060A	NSA935401-05		. . . TIE-CABLE used on 040A, 040B, 040C, 040D, 040E, 040F, 040G, 040H, 040J, 040K		001

- ITEM NOT ILLUSTRATED

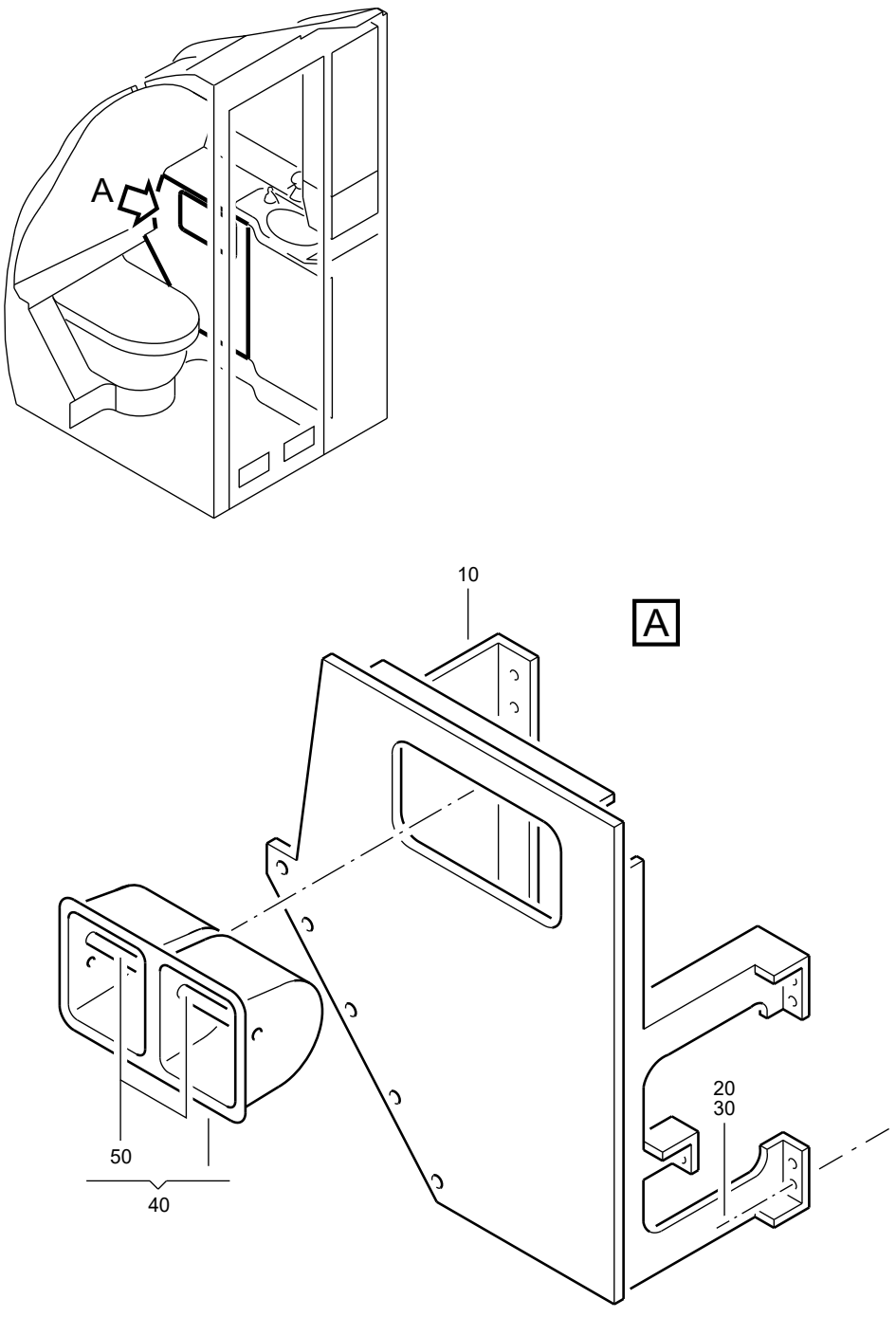

F_PL_254151_17_E_01_00

PANEL ASSY-WASHBASIN UNIT
Figure 17E/EN254151SHEET17E01

FIG. ITEM	PART NUMBER	AIRLINE STOCK NUMBER	NOMENCLATURE 1234567	EFF CODE	UNITS PER ASSY
17E					
-001A	D2549030413476		. PANEL ASSY-WASHBASIN UNIT NP used on 130E (25415142N), 130E (25415142T) SEE 25-41-51-42N FOR NHA SEE 25-41-51-42T FOR NHA		RF
-001B	D2549030414676		. PANEL ASSY-WASHBASIN UNIT NP used on 130F (25415142N), 130E (25415142S) SEE 25-41-51-42N FOR NHA SEE 25-41-51-42S FOR NHA		RF
-001C	D2549030701876		. PANEL ASSY-WASHBASIN UNIT NP used on 130E (25415142R), 130G (25415142S) SEE 25-41-51-42R FOR NHA SEE 25-41-51-42S FOR NHA		RF
-001D	D2549030702076		. PANEL ASSY-WASHBASIN UNIT NP used on 130G (25415142R) SEE 25-41-51-42R FOR NHA		RF
-001E	D2549030703076		. PANEL ASSY-WASHBASIN UNIT NP used on 130F (25415142U) SEE 25-41-51-42U FOR NHA		RF
010A	A225400437-604		. . PANEL ASSY-WASHBASIN UNIT used on 001A		001
-010B	A225400437-540		. . PANEL ASSY-WASHBASIN UNIT used on 001B		001

- ITEM NOT ILLUSTRATED

FIG. ITEM	PART NUMBER	AIRLINE STOCK NUMBER	NOMENCLATURE 1234567	EFF CODE	UNITS PER ASSY
-010C	A225400437-542		. . PANEL ASSY-WASHBASIN UNIT used on 001C		001
-010D	A225400437-544		. . PANEL ASSY-WASHBASIN UNIT used on 001D		001
-010E	A225400437-546		. . PANEL ASSY-WASHBASIN UNIT used on 001E		001
020A	NAS1096-2-7		. . SCREW BUY PN NAS1801-08-7 used on 001A, 001B, 001C, 001D, 001E		009
030A	ASNA0113-40ADL		. . WASHER used on 001A, 001B, 001C, 001D, 001E		009
040A	A225400434-588		. . HOLDER ASSY-PAPER ROLL BUY PN A225400434-724 used on 001A		001
-040B	A225400434-610		. . HOLDER ASSY-PAPER ROLL used on 001B		001
-040C	A225400434-612		. . HOLDER ASSY-PAPER ROLL BUY PN A225400434-722 used on 001C		001
-040D	A225400434-614		. . HOLDER ASSY-PAPER ROLL BUY PN A225400434-740 used on 001D		001
-040E	A225400434-616		. . HOLDER ASSY-PAPER ROLL used on 001E		001

- ITEM NOT ILLUSTRATED

FIG. ITEM	PART NUMBER	AIRLINE STOCK NUMBER	NOMENCLATURE 1234567	EFF CODE	UNITS PER ASSY
050A	D2547093815000		. . . ROLLER used on 040A, 040B, 040C, 040D, 040E		002
-060A	NSA935401-05		. . . TIE-CABLE used on 040A, 040B, 040C, 040D, 040E		001

- ITEM NOT ILLUSTRATED

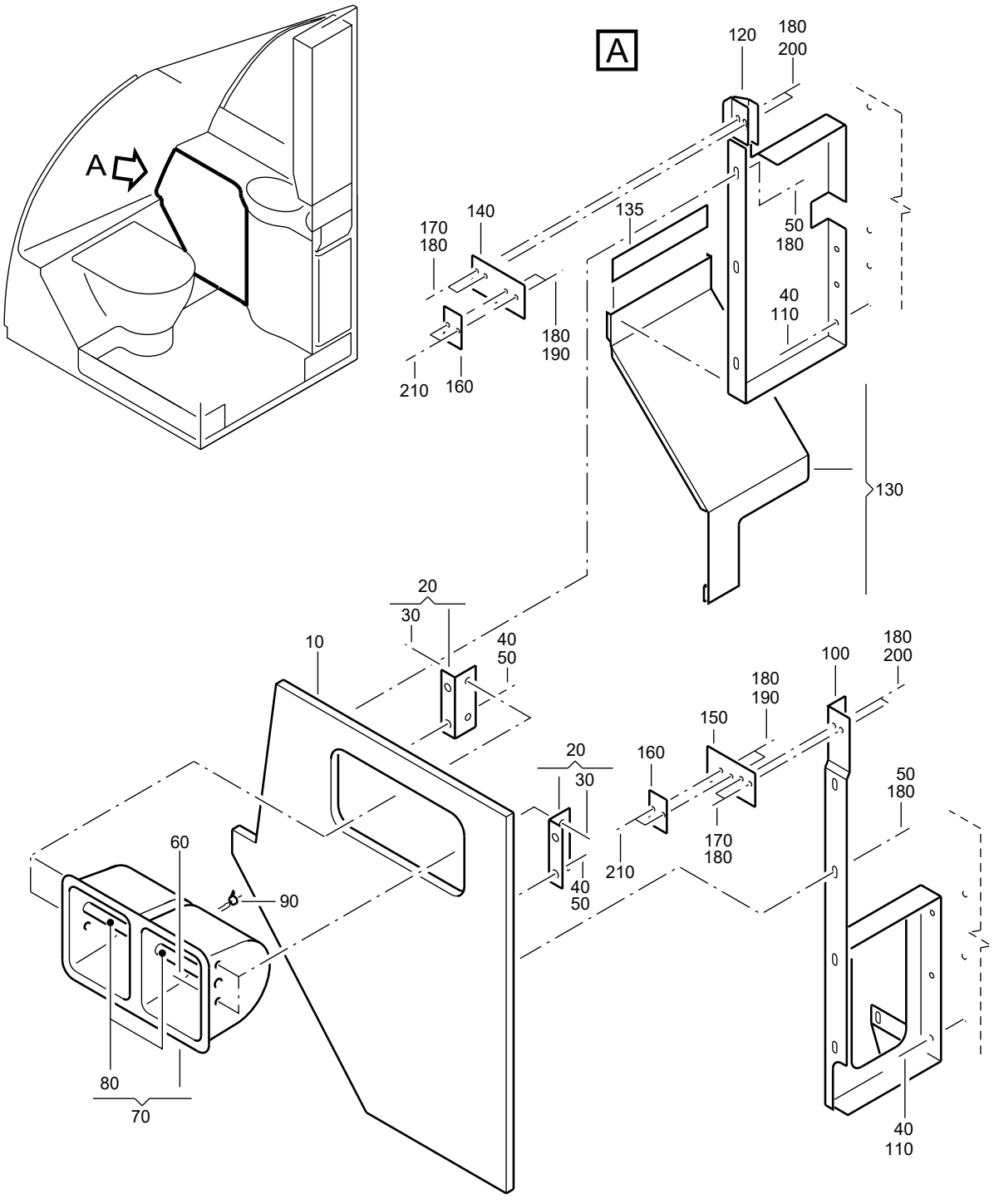

F_PL_254151_17_F_01_00

PANEL ASSY-WASHBASIN UNIT
Figure 17F/EN254151SHEET17F01

FIG. ITEM	PART NUMBER	AIRLINE STOCK NUMBER	NOMENCLATURE 1234567	EFF CODE	UNITS PER ASSY
17F					
-001A	D2547161903076		. PANEL ASSY-WASHBASIN UNIT NP POST SB 25-1742 used on 130K (25415101G) SEE 25-41-51-01G FOR NHA		RF
010A	A225401430-510		. . PANEL ASSY-WASHBASIN UNIT used on 001A		001
020A	A225400435-000		. . HOLDER-ROLL used on 001A		002
030A	NAS1068A08		. . . NUT BUY PN MS21075L08 used on 020A		002
040A	NAS1149CN832R		. . WASHER used on 001A		011
050A	NAS1801-08-4		. . SCREW used on 001A		011
060A	NAS1102-08-7		. . SCREW used on 001A		004
070A	D2547093801400		. . HOLDER-PAPER ROLL used on 001A		001
080A	D2547093815000		. . . ROLLER used on 070A		002
090A	NSA935401-05		. . . TIE-CABLE used on 070A		001
100A	A225400420-226		. . BRACKET-WASHBASIN UNIT POST SB 25-1742 used on 001A		001

- ITEM NOT ILLUSTRATED

FIG. ITEM	PART NUMBER	AIRLINE STOCK NUMBER	NOMENCLATURE 1234567	EFF CODE	UNITS PER ASSY
110A	NAS1801-08-5		. . SCREW used on 001A		007
120A	A225400421-200		. . BRACKET POST SB 25-1742 used on 001A		001
130A	A225400423-002		. . PLATE ASSY-PROTECTIVE used on 001A		001
135A	DAN98S3B		. . . STRIP-CLING USE AS REQUIRED used on 130A		AR
140A	A325400420-206		. . BRACKET POST SB 25-1742 used on 001A		001
150A	A325400420-208		. . BRACKET POST SB 25-1742 used on 001A		001
160A	A325400420-210		. . SPACER POST SB 25-1742 used on 001A		002
170A	NAS1801-08-9		. . SCREW POST SB 25-1742 used on 001A		004
180A	ASNA0113-40ADL		. . WASHER POST SB 25-1742 used on 001A		019
190A	NSA5067-08-1		. . NUT POST SB 25-1742 used on 001A		004
200A	MS21042-08		. . NUT POST SB 25-1472 used on 001A		004

- ITEM NOT ILLUSTRATED

FIG. ITEM	PART NUMBER	AIRLINE STOCK NUMBER	NOMENCLATURE 1234567	EFF CODE	UNITS PER ASSY
210A	NAS1801-08-14		. . SCREW POST SB 25-1742 used on 001A		004

- ITEM NOT ILLUSTRATED

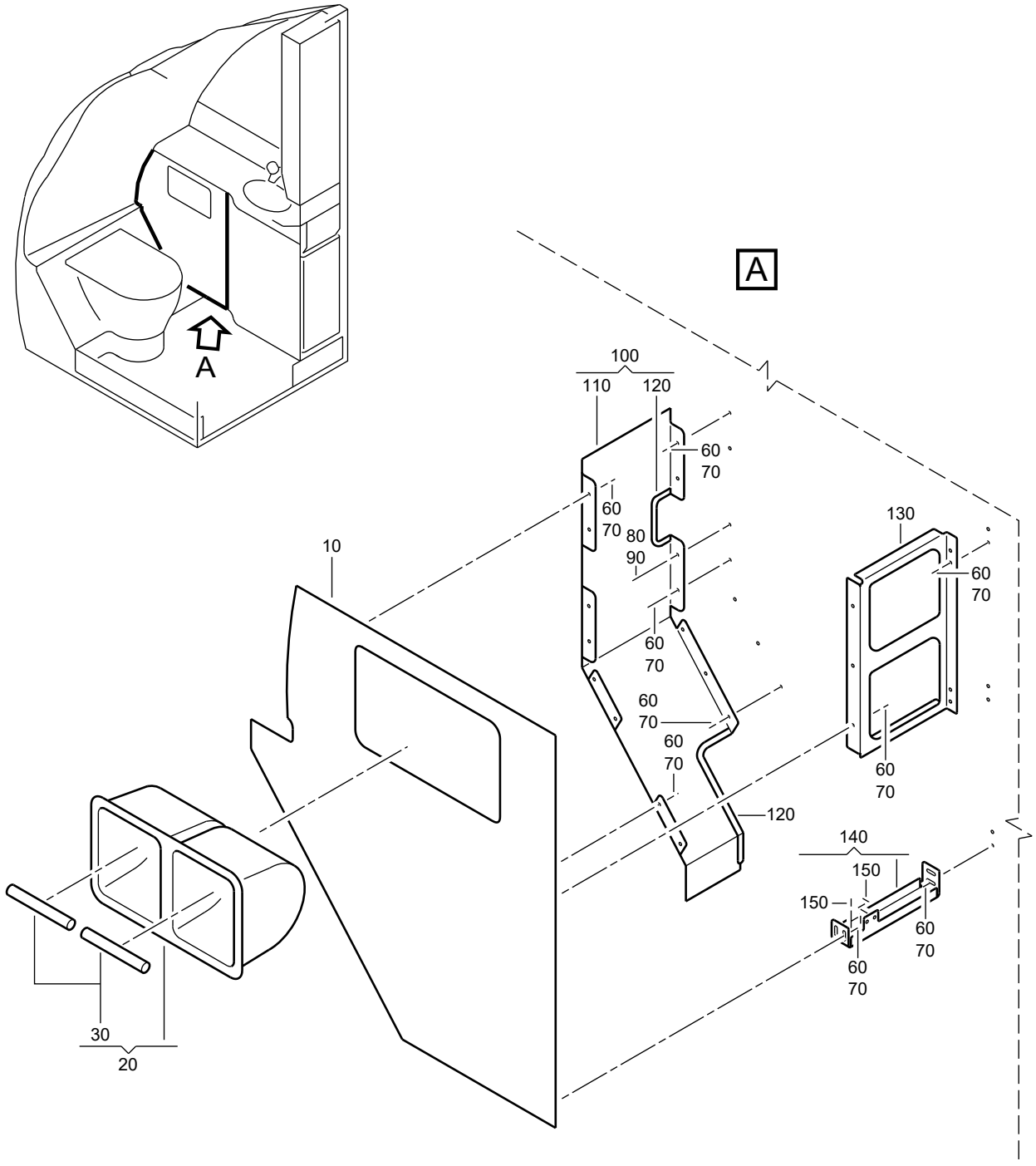

F_PL_254151_17_G_01_00

PANEL ASSY-WASHBASIN UNIT
Figure 17G/EN254151SHEET17G01

FIG. ITEM	PART NUMBER	AIRLINE STOCK NUMBER	NOMENCLATURE 1234567	EFF CODE	UNITS PER ASSY
17G					
-001A	D2547161202876		. PANEL ASSY-WASHBASIN NP UNIT POST SB 25-1674 used on 130F (25415141M), 130H (25415142N) SEE 25-41-51-41M FOR NHA SEE 25-41-51-42N FOR NHA		RF
010A	A225400430-900		. . PANEL ASSY-WASHBASIN UNIT POST SB 25-1674 used on 001A		001
-015A	NAS1833C08-250		. . . INSERT used on 010A		017
020A	A225400434-704		. . HOLDER ASSY-PAPER ROLL POST SB 25-1674 used on 001A		001
030A	A825400441-000		. . . ROLLER used on 020A		002
-040A	NSA935401-05		. . . TIE-CABLE used on 020A		001
060A	ASNA0113-40ADL		. . WASHER POST SB 25-1674 used on 001A		025
070A	NAS1801-08-5		. . SCREW POST SB 25-1674 used on 001A		025
080A	NAS1801-08-6		. . SCREW POST SB 25-1674 used on 001A		001

- ITEM NOT ILLUSTRATED

FIG. ITEM	PART NUMBER	AIRLINE STOCK NUMBER	NOMENCLATURE 1234567	EFF CODE	UNITS PER ASSY
090A	NAS1149CN832R		. . WASHER POST SB 25-1674 used on 001A		001
100A	A225400421-008		. . BRACKET-WASHBASIN UNIT POST SB 25-1674 used on 001A		001
110A	A225400421-216		. . . BRACKET used on 100A		001
120A	DAN165-1		. . . SECTION-PROTECTING USE AS REQUIRED used on 100A		AR
130A	A225400420-246		. . BRACKET-WASHBASIN UNIT POST SB 25-1674 used on 001A		001
140A	A225400420-020		. . ANGLE POST SB 25-1674 used on 001A		001
150A	MS21076-08E		. . . NUT used on 140A		004
-160A	DIN65399-2400CF		. . . RIVET BUY PN EN6101D3 used on 140A		008

- ITEM NOT ILLUSTRATED

THIS PAGE IS INTENTIONALLY LEFT BLANK

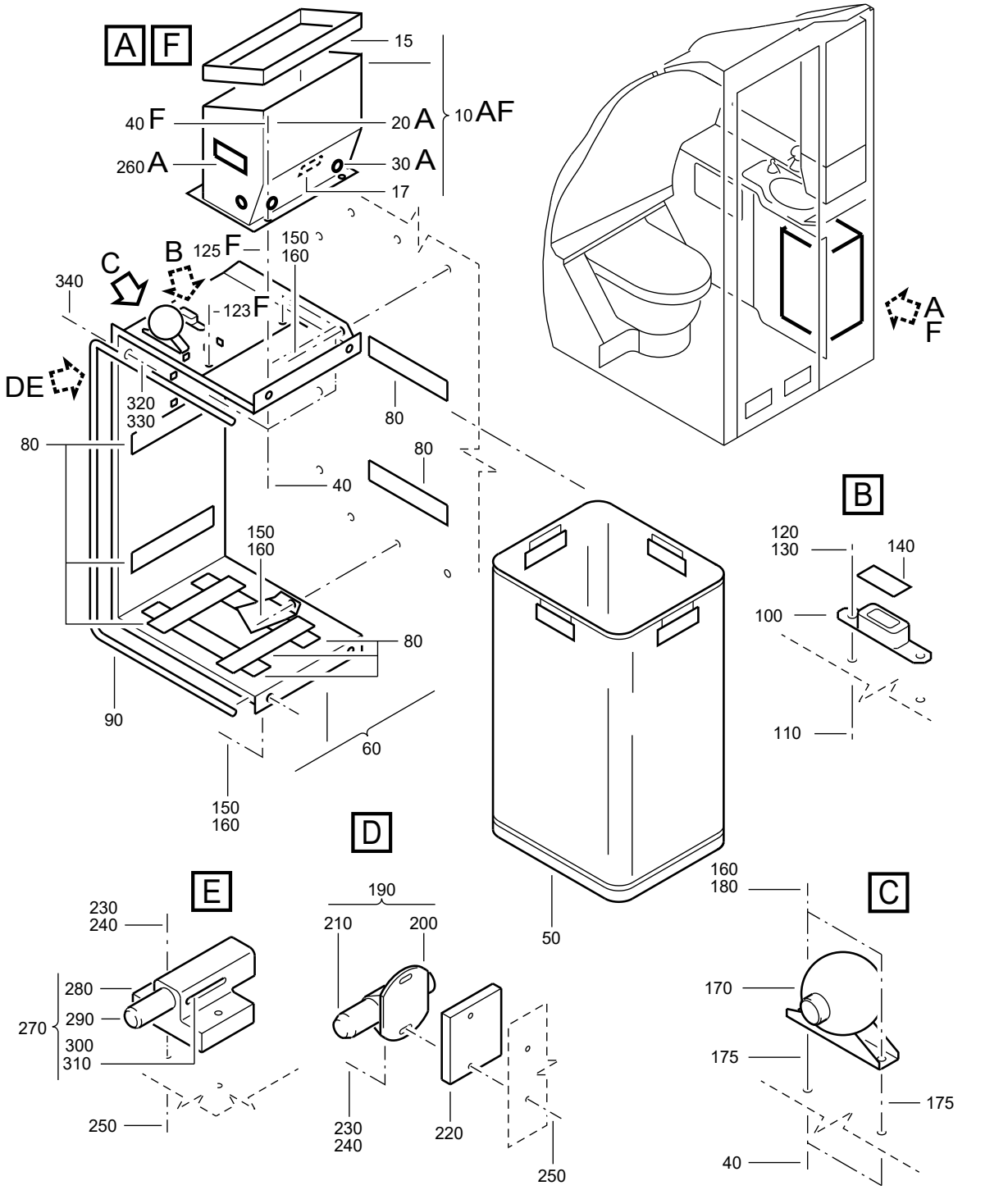

F_PL_254151_18_0_01_00

BIN-WASTE,CHUTE-WASTE AND EXTINGUISHER-FIRE
Figure 18/EN254151SHEET18001

FIG. ITEM	PART NUMBER	AIRLINE STOCK NUMBER	NOMENCLATURE 1234567	EFF CODE	UNITS PER ASSY
18 -001A	D2549010500077		. BIN-WASTE,CHUTE-WASTE AND EXTINGUISHER-FIRE NP PRE VSB A2-254-25-013 used on 140A (254151010), 140A (25415101A), 140A(25415101B), 140A (25415101C), 140A (25415101D), 140A(25415101E), 140A (25415101F), 140A (25415101G), 140C(25415101H), 140C (25415101K), 140C (25415101L), 140B(25415101M), 140C (25415101N), 140B (25415141T) SEE 25-41-51-010 FOR NHA SEE 25-41-51-01A FOR NHA SEE 25-41-51-01B FOR NHA SEE 25-41-51-01C FOR NHA SEE 25-41-51-01D FOR NHA SEE 25-41-51-01E FOR NHA SEE 25-41-51-01F FOR NHA SEE 25-41-51-01G FOR NHA SEE 25-41-51-01H FOR NHA SEE 25-41-51-01K FOR NHA SEE 25-41-51-01L FOR NHA SEE 25-41-51-01M FOR NHA SEE 25-41-51-01N FOR NHA SEE 25-41-51-41T FOR NHA		RF

- ITEM NOT ILLUSTRATED

FIG. ITEM	PART NUMBER	AIRLINE STOCK NUMBER	NOMENCLATURE 1234567		EFF CODE	UNITS PER ASSY
-001B	D2549020500077		. BIN-WASTE,CHUTE-WASTE AND EXTINGUISHER-FIRE used on 140B (254151010), 140B (25415101A), 140C(25415101B), 140B (25415101E), 140C (25415101F), 140C(25415141T) SEE 25-41-51-010 FOR NHA SEE 25-41-51-01A FOR NHA SEE 25-41-51-01B FOR NHA SEE 25-41-51-01E FOR NHA SEE 25-41-51-01F FOR NHA SEE 25-41-51-41T FOR NHA	NP		RF
-001C	D2549010502877		. BIN-WASTE,CHUTE-WASTE AND EXTINGUISHER-FIRE used on 140B (25415101B), 140C (25415101E), 140B (25415101F) SEE 25-41-51-01B FOR NHA SEE 25-41-51-01E FOR NHA SEE 25-41-51-01F FOR NHA	NP		RF
-001D	D2549010501677		. BIN-WASTE,CHUTE-WASTE AND EXTINGUISHER-FIRE used on 140C (25415101A) SEE 25-41-51-01A FOR NHA	NP		RF
-001E	D2549020602677		. BIN-WASTE,CHUTE-WASTE AND EXTINGUISHER-FIRE PRE VSB A2-254-25-013 PRE VSB A2-254-25-032 used on 140B (25415101G), 140A (25415101H), 140B (25415101J), 140B (25415101L) SEE 25-41-51-01G FOR NHA SEE 25-41-51-01H FOR NHA SEE 25-41-51-01J FOR NHA SEE 25-41-51-01L FOR NHA	NP		RF

- ITEM NOT ILLUSTRATED

FIG. ITEM	PART NUMBER	AIRLINE STOCK NUMBER	NOMENCLATURE 1234567	EFF CODE	UNITS PER ASSY
-001F	D2549020603677		. BIN-WASTE,CHUTE-WASTE AND EXTINGUISHER-FIRE NP used on 140B (25415101H) SEE 25-41-51-01H FOR NHA		RF

- ITEM NOT ILLUSTRATED

FIG. ITEM	PART NUMBER	AIRLINE STOCK NUMBER	NOMENCLATURE 1234567	EFF CODE	UNITS PER ASSY
-001G	D2549030504877		. BIN-WASTE,CHUTE-WASTE AND EXTINGUISHER-FIRE NP used on 140A (25415101J), 140A (25415101K), 140A(25415101L), 140A (25415101M), 140A (25415101N), 140B(25415101P), 140A (25415101Q), 140A (25415101R), 140B(25415101S), 140A (25415101T), 140A (25415101U), 140A(25415101V), 140A (25415101W), 140A (25415101X), 140A(25415101Y), 140A (25415101Z), 140A (254151410), 140A(25415141A), 140A (25415141B), 140A (25415141C), 140A(25415141D), 140A (25415141F), 140A (25415141G), 140A(25415141H), 140A (25415141J), 140A (25415141K), 140A(25415141L), 140A (25415141M), 140A (25415141N), 140A(25415141P), 150A (25415141Q), 140A (25415141R), 140A(25415141S), 140A (25415141T), 140A (25415141U), 140A(25415141V), 140A (25415141W), 140B (25415141X), 140A(25415141Y), 140A (25415142D), 140B (25415142Q), 140B(25415142U) SEE 25-41-51-01J FOR NHA SEE 25-41-51-01K FOR NHA SEE 25-41-51-01L FOR NHA SEE 25-41-51-01M FOR NHA SEE 25-41-51-01N FOR NHA SEE 25-41-51-01P FOR NHA SEE 25-41-51-01Q FOR NHA SEE 25-41-51-01R FOR NHA SEE 25-41-51-01S FOR NHA SEE 25-41-51-01T FOR NHA		RF

- ITEM NOT ILLUSTRATED

FIG. ITEM	PART NUMBER	AIRLINE STOCK NUMBER	NOMENCLATURE 1234567	EFF CODE	UNITS PER ASSY
			SEE 25-41-51-01U FOR NHA SEE 25-41-51-01V FOR NHA SEE 25-41-51-01W FOR NHA SEE 25-41-51-01X FOR NHA SEE 25-41-51-01Y FOR NHA SEE 25-41-51-01Z FOR NHA SEE 25-41-51-410 FOR NHA SEE 25-41-51-41A FOR NHA SEE 25-41-51-41B FOR NHA SEE 25-41-51-41C FOR NHA SEE 25-41-51-41D FOR NHA SEE 25-41-51-41F FOR NHA SEE 25-41-51-41G FOR NHA SEE 25-41-51-41H FOR NHA SEE 25-41-51-41J FOR NHA SEE 25-41-51-41K FOR NHA SEE 25-41-51-41L FOR NHA SEE 25-41-51-41M FOR NHA SEE 25-41-51-41N FOR NHA SEE 25-41-51-41P FOR NHA SEE 25-41-51-41Q FOR NHA SEE 25-41-51-41R FOR NHA SEE 25-41-51-41S FOR NHA SEE 25-41-51-41T FOR NHA SEE 25-41-51-41U FOR NHA SEE 25-41-51-41V FOR NHA SEE 25-41-51-41W FOR NHA SEE 25-41-51-41X FOR NHA SEE 25-41-51-41Y FOR NHA SEE 25-41-51-42D FOR NHA SEE 25-41-51-42Q FOR NHA SEE 25-41-51-42U FOR NHA		

- ITEM NOT ILLUSTRATED

FIG. ITEM	PART NUMBER	AIRLINE STOCK NUMBER	NOMENCLATURE 1234567	EFF CODE	UNITS PER ASSY
-001H	D2549020506277		. BIN-WASTE,CHUTE-WASTE AND EXTINGUISHER-FIRE NP used on 140C (25415101J), 140A (25415101P), 140B(25415101Q), 140B (25415101T), 140B (25415101V), 140C(25415101W), 140B (25415101Y), 140C (25415141B), 140B(25415141D), 140B (25415141G), 140B (25415141H), 140B(25415141M), 140B (25415141N), 140B (25415141W) SEE 25-41-51-01J FOR NHA SEE 25-41-51-01P FOR NHA SEE 25-41-51-01Q FOR NHA SEE 25-41-51-01T FOR NHA SEE 25-41-51-01V FOR NHA SEE 25-41-51-01W FOR NHA SEE 25-41-51-01Y FOR NHA SEE 25-41-51-41B FOR NHA SEE 25-41-51-41D FOR NHA SEE 25-41-51-41G FOR NHA SEE 25-41-51-41H FOR NHA SEE 25-41-51-41M FOR NHA SEE 25-41-51-41N FOR NHA SEE 25-41-51-41W FOR NHA		RF

- ITEM NOT ILLUSTRATED

FIG. ITEM	PART NUMBER	AIRLINE STOCK NUMBER	NOMENCLATURE 1234567	EFF CODE	UNITS PER ASSY
-001J	D2549010509477		. BIN-WASTE,CHUTE-WASTE AND EXTINGUISHER-FIRE NP used on 140D (25415101J), 140B (25415101N), 140C(25415101P), 140A (25415101S), 140B (25415101W), 140C(25415101Y), 140B (254151410), 140C (25415141G) SEE 25-41-51-01J FOR NHA SEE 25-41-51-01N FOR NHA SEE 25-41-51-01P FOR NHA SEE 25-41-51-01S FOR NHA SEE 25-41-51-01W FOR NHA SEE 25-41-51-01Y FOR NHA SEE 25-41-51-410 FOR NHA SEE 25-41-51-41G FOR NHA		RF
-001K	D2549020600477		. BIN-WASTE,CHUTE-WASTE AND EXTINGUISHER-FIRE NP used on 140D (25415101A), 140B (25415101D), 140D (25415101F), 140C (25415101G), 140D (25415101H), 140B(25415101K), 140C (254151410), 140B (25415141B) SEE 25-41-51-01A FOR NHA SEE 25-41-51-01D FOR NHA SEE 25-41-51-01F FOR NHA SEE 25-41-51-01G FOR NHA SEE 25-41-51-01H FOR NHA SEE 25-41-51-01K FOR NHA SEE 25-41-51-410 FOR NHA SEE 25-41-51-41B FOR NHA		RF

- ITEM NOT ILLUSTRATED

FIG. ITEM	PART NUMBER	AIRLINE STOCK NUMBER	NOMENCLATURE 1234567	EFF CODE	UNITS PER ASSY
-001L	D2549010611677		. BIN-WASTE,CHUTE-WASTE AND EXTINGUISHER-FIRE NP used on 140B (25415141V), 140C (25415141W), 140A (25415141X), 140B (25415141Y), 140A (25415141Z), 140A (254151420), 140A (25415142A), 140A (25415142B), 140A (25415142C), 140B (25415142D), 140A (25415142E), 140A(25415142F), 140A (25415142G), 140A (25415142H), 140A(25415142J), 140A (25415142K), 140A (25415142L), 140A(25415142M), 140A (25415142N), 140A (25415142P), 140A(25415142Q), 140A (25415142R), 140A (25415142S), 140A(25415142T), 140A (25415142U) SEE 25-41-51-41V FOR NHA SEE 25-41-51-41W FOR NHA SEE 25-41-51-41X FOR NHA SEE 25-41-51-41Y FOR NHA SEE 25-41-51-41Z FOR NHA SEE 25-41-51-420 FOR NHA SEE 25-41-51-42A FOR NHA SEE 25-41-51-42B FOR NHA SEE 25-41-51-42C FOR NHA SEE 25-41-51-42D FOR NHA SEE 25-41-51-42E FOR NHA SEE 25-41-51-42F FOR NHA SEE 25-41-51-42G FOR NHA SEE 25-41-51-42H FOR NHA SEE 25-41-51-42J FOR NHA SEE 25-41-51-42K FOR NHA SEE 25-41-51-42L FOR NHA SEE 25-41-51-42M FOR NHA SEE 25-41-51-42N FOR NHA SEE 25-41-51-42P FOR NHA		RF

- ITEM NOT ILLUSTRATED

FIG. ITEM	PART NUMBER	AIRLINE STOCK NUMBER	NOMENCLATURE 1234567		EFF CODE	UNITS PER ASSY
			SEE 25-41-51-42Q FOR NHA SEE 25-41-51-42R FOR NHA SEE 25-41-51-42S FOR NHA SEE 25-41-51-42T FOR NHA SEE 25-41-51-42U FOR NHA			
-001M	D2549030402477		. BIN-WASTE,CHUTE-WASTE AND EXTINGUISHER-FIRE used on 140C (25415141X) SEE 25-41-51-41X FOR NHA	NP		RF
-001N	D2547161903077		. CONSOLE-WASHBASIN UNIT POST SB 25-1742 used on 140D (25415101G) SEE 25-41-51-01G FOR NHA	NP		RF
-001P	D2547161202877		. BIN-WASTE,CHUTE-WASTE AND EXTINGUISHER-FIRE POST SB 25-1674 used on 140C (25415141M) SEE 25-41-51-41M FOR NHA	NP		RF
-001Q	D2547161203477		. BIN-WASTE,CHUTE-WASTE AND EXTINGUISHER-FIRE POST SB 25-1674 used on 140B (25415142N) SEE 25-41-51-42N FOR NHA	NP		RF
-001R	D2549010500077		. BIN-WASTE,CHUTE-WASTE AND EXTINGUISHER-FIRE POST VSB A2-254-25-013 used on 140A (25415101C) SEE 25-41-51-01C FOR NHA	NP		RF

- ITEM NOT ILLUSTRATED

FIG. ITEM	PART NUMBER	AIRLINE STOCK NUMBER	NOMENCLATURE 1234567	EFF CODE	UNITS PER ASSY
-001S	D2549020602677		. BIN-WASTE,CHUTE-WASTE AND EXTINGUISHER-FIRE NP POST VSB A2-254-25-013 POST VSB A2-254-25-032 used on 140E (25415101H), 140D (25415101L) SEE 25-41-51-01H FOR NHA SEE 25-41-51-01L FOR NHA		RF
010A	5L0037500100000		. . CHUTE-WASTE PRE VSB A2-254-25-013 PRE VSB A2-254-25-032 used on 001A, 001B, 001D, 001E, 001K		001
-010B	A225400424-200		. . CHUTE-WASTE used on 001C		001
-010C	A225400424-002		. . CHUTE-WASTE POST SB 25-1742 used on 001F, 001G, 001H, 001L, 001M, 001N		001
-010D	A225400424-004		. . CHUTE-WASTE used on 001J		001
-010E	A225400424-008		. . CHUTE-WASTE POST SB 25-1674 used on 001P, 001Q		001
-010F	A225400424-000		. . CHUTE-WASTE POST VSB A2-254-25-013 POST VSB A2-254-25-032 used on 001R, 001S		001
015A	A225400424-220		. . . SECTION used on 010C, 010D, 010E		001
017A	A225400424-202		. . . FITTING-SUPPORT used on 010C, 010D, 010E, 010F		001

- ITEM NOT ILLUSTRATED

FIG. ITEM	PART NUMBER	AIRLINE STOCK NUMBER	NOMENCLATURE 1234567	EFF CODE	UNITS PER ASSY
020A	MS21059-08		. . . NUT used on 010A, 010B, 010F		004
030A	2634DP437		. . . CAP used on 010A, 010B, 010F		003
040A	NAS1102-08-7		. . SCREW used on 001A, 001B, 001C, 001D, 001E, 001F, 001G, 001H, 001J, 001K, 001L, 001M, 001N, 001P, 001Q, 001R, 001S		006
050A	5L0012000100000		. . CONTAINER-WASTE used on 001A, 001B, 001C, 001D, 001E, 001F, 001G, 001H, 001J, 001K, 001L, 001M, 001N, 001P, 001Q, 001R, 001S		001
060A	A225400422-000		. . CONSOLE ASSY-WASTE BOX used on 001A, 001B, 001D, 001E, 001K, 001N, 001R, 001S		001
-060B	A225400422-002		. . CONSOLE ASSY-WASTE BOX used on 001C		001
-060C	A225400422-004		. . CONSOLE ASSY-WASTE BOX used on 001F		001
-060D	A325400422-006		. . CONSOLE ASSY-WASTE BOX used on 001J		001
-060E	A325400422-004		. . CONSOLE ASSY-WASTE BOX used on 001G, 001H, 001L, 001M, 001P, 001Q		001
080A	0-112-0016-2000		. . . STRIP-SLIDING USE AS REQUIRED used on 060A, 060B, 060C, 060D, 060E		AR

- ITEM NOT ILLUSTRATED

FIG. ITEM	PART NUMBER	AIRLINE STOCK NUMBER	NOMENCLATURE 1234567	EFF CODE	UNITS PER ASSY
090A	DAN77-2		. . . SECTION-HOSE USE AS REQUIRED used on 060A, 060B, 060C, 060D, 060E		AR
100A	A2547769420000		. . . COVER used on 060A, 060B, 060C, 060D, 060E		001
110A	NAS1102-08-6		. . . SCREW used on 060A, 060B, 060C, 060D, 060E		002
120A	AN960C8		. . . WASHER BUY PN NAS1149CN832R used on 060A, 060B		002
-120B	NAS1149CN832R		. . . WASHER used on 060C, 060D, 060E		002
123A	MS21051L08		. . . NUT used on 060C, 060D, 060E		001
125A	MS21051-08		. . . NUT used on 060C, 060D, 060E		003
130A	MS21042-08		. . . NUT used on 060A, 060B, 060C, 060D, 060E		002
140A	ABS5006-2F		. . . TAPE-SELF-ADHESIVE, FOAM USE AS REQUIRED used on 060A, 060B, 060C, 060D, 060E		AR

- ITEM NOT ILLUSTRATED

FIG. ITEM	PART NUMBER	AIRLINE STOCK NUMBER	NOMENCLATURE 1234567	EFF CODE	UNITS PER ASSY
150A	NAS1801-08-5		. . SCREW used on 001A, 001B, 001C, 001D, 001E, 001F, 001G, 001H, 001J, 001K, 001L, 001M, 001N, 001P, 001Q, 001R, 001S		014
160A	AN960C8		. . WASHER BUY PN NAS1149CN832R used on 001A, 001B, 001C, 001D, 001R		016
-160B	NAS1149CN832R		. . WASHER used on 001E, 001F, 001G, 001H, 001J, 001K, 001L, 001M, 001N, 001P, 001Q, 001S		016
170A	BA21758		. . EXTINGUISHER-FIRE used on 001A, 001B, 001E, 001F, 001G, 001H, 001K, 001N, 001P, 001R, 001S		001
-170B	A825100-3		. . EXTINGUISHER-FIRE used on 001C, 001D, 001J		001
-170C	BA24320A1		. . EXTINGUISHER-FIRE used on 001A, 001B, 001E, 001F, 001G, 001H, 001K, 001L, 001M, 001N, 001P, 001Q, 001R, 001S		001
175A	AN960C516		. . WASHER BUY PN NAS1149C0563R used on 001A, 001B, 001C, 001D, 001R		002
-175B	NAS1149C0563R		. . WASHER used on 001E, 001F, 001G, 001H, 001J, 001K, 001L, 001M, 001N, 001P, 001Q, 001S		002

- ITEM NOT ILLUSTRATED

FIG. ITEM	PART NUMBER	AIRLINE STOCK NUMBER	NOMENCLATURE 1234567	EFF CODE	UNITS PER ASSY
180A	NSA5067-08-1		. . NUT used on 001A, 001B, 001C, 001D, 001E, 001F, 001G, 001H, 001J, 001K, 001L, 001M, 001N, 001P, 001Q, 001R, 001S		002
190A	A225400433-000		. . EJECTOR ASSY-DOOR used on 001A, 001C, 001D, 001E, 001F, 001K, 001N, 001R, 001S		001
200A	A225400433-200		. . . EJECTOR-DOOR used on 190A		001
210A	A225400433-204		. . . BUMPER used on 190A		001
220A	A225400433-202		. . SHIM used on 001A, 001C, 001D, 001E, 001F, 001K, 001N, 001R, 001S		001
230A	NAS514P632-11		. . SCREW USAGE RANGE FROM 002 TO 003 used on 001A, 001C, 001D, 001E, 001F, 001G, 001J, 001K, 001L, 001N, 001P, 001Q, 001R, 001S		002
240A	AN960C6		. . WASHER USAGE RANGE FROM 002 TO 003 BUY PN NAS1149CN632R used on 001A, 001C, 001D, 001R		002

- ITEM NOT ILLUSTRATED

FIG. ITEM	PART NUMBER	AIRLINE STOCK NUMBER	NOMENCLATURE 1234567	EFF CODE	UNITS PER ASSY
-240B	NAS1149CN632R		. . WASHER USAGE RANGE FROM 002 TO 003 used on 001E, 001F, 001G, 001J, 001K, 001L, 001M, 001N, 001P, 001Q, 001S		002
250A	MS21042-06		. . NUT USAGE RANGE FROM 002 TO 004 used on 001A, 001C, 001D, 001E, 001F, 001G, 001J, 001K, 001L, 001M, 001N, 001P, 001Q, 001R, 001S		003
260A	210-071C		. . PLATE-TEMPERATURE used on 001C, 001D, 001J		001
270A	A225400436-000		. . EJECTOR ASSY-DOOR used on 001G, 001J, 001L, 001P, 001Q		001
280A	A225400436-200		. . . HOUSING-DOOR EJECTOR used on 270A		001
290A	A225400436-202		. . . PIN-DOOR EJECTOR used on 270A		001
300A	MS20253P2-65		. . . PIN-HINGE used on 270A		001
310A	VD125		. . . SPRING used on 270A		001
320A	NAS1102-08-5		. . SCREW POST SB 38-1055 POST VSB A2-254-25-032 used on 001F, 001K, 001N, 001R, 001S		001

- ITEM NOT ILLUSTRATED

FIG. ITEM	PART NUMBER	AIRLINE STOCK NUMBER	NOMENCLATURE 1234567	EFF CODE	UNITS PER ASSY
330A	NAS1149CN832R		. . WASHER POST SB 38-1055 POST VSB A2-254-25-032 used on 001F, 001K, 001N, 001R, 001S		001
340A	MS21042-08		. . NUT POST SB 38-1055 POST VSB A2-254-25-032 used on 001F, 001K, 001N, 001R, 001S		001

- ITEM NOT ILLUSTRATED

THIS PAGE IS INTENTIONALLY LEFT BLANK

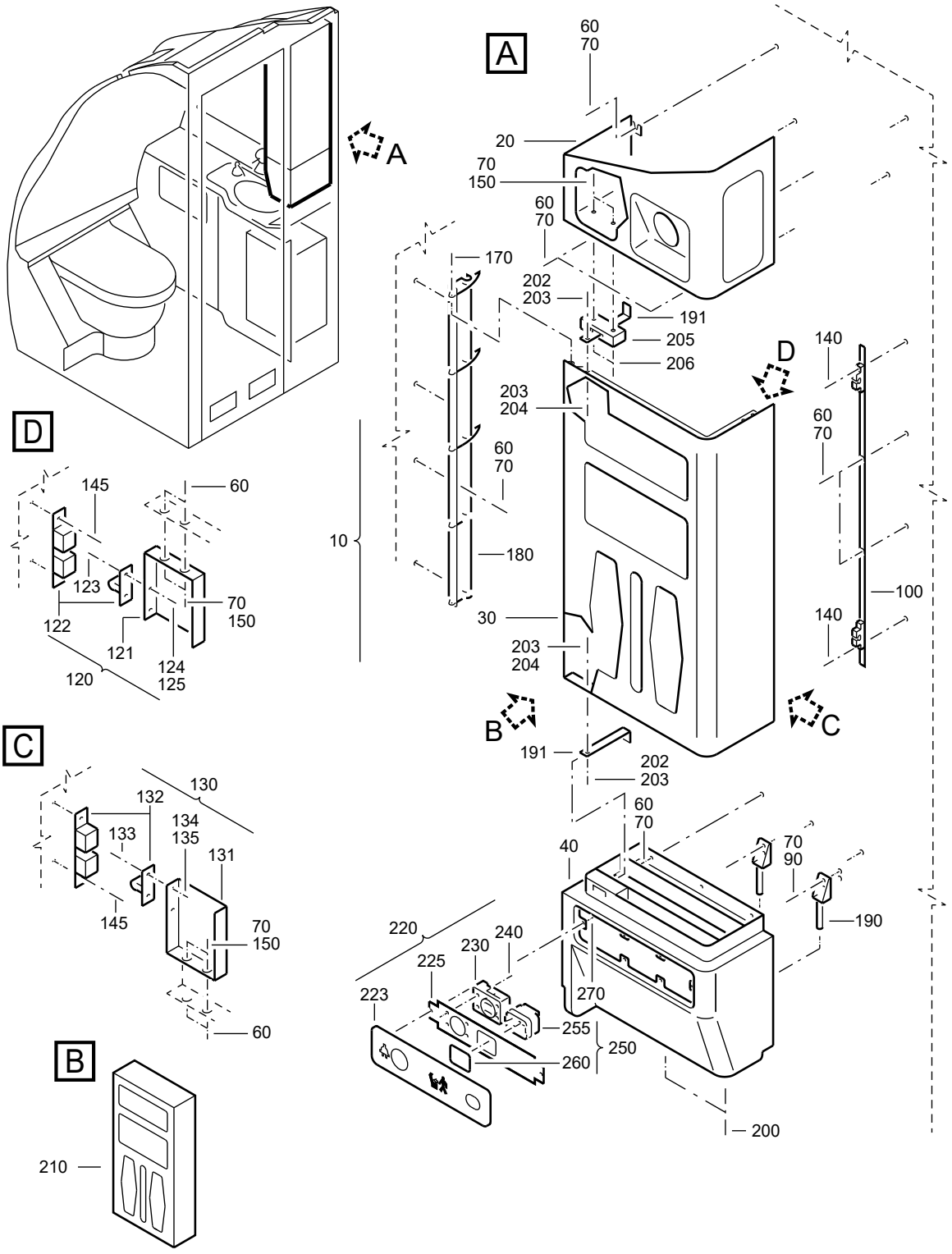

F_PL_254151_19_0_01_00

CABINET-SERVICE
Figure 19/EN254151SHEET19001

FIG. ITEM	PART NUMBER	AIRLINE STOCK NUMBER	NOMENCLATURE 1234567	EFF CODE	UNITS PER ASSY
19					
-001A	D2549010500078		. CABINET-SERVICE NP used on 150A (254151010), 150C (25415101A), 150B(25415101B), 150F (25415101E) SEE 25-41-51-010 FOR NHA SEE 25-41-51-01A FOR NHA SEE 25-41-51-01B FOR NHA SEE 25-41-51-01E FOR NHA		RF
-001B	D2549030500678		. CABINET-SERVICE NP used on 150B (25415101C), 150A (25415101E) SEE 25-41-51-01C FOR NHA SEE 25-41-51-01E FOR NHA		RF
-001C	D2549020603678		. CABINET-SERVICE NP used on 150B (25415101H) SEE 25-41-51-01H FOR NHA		RF
010A	A225401412-602		. . CABINET ASSY-SERVICE POST SB 25-1165 used on 001A		001
-010B	A225401412-604		. . CABINET ASSY-SERVICE used on 001B		001
-010C	A225401412-606		. . CABINET ASSY-SERVICE used on 001C		001
020A	A225401413-500		. . . CABINET ASSY-SERVICE, UPR PART used on 010A, 010B		001
-020B	A225401413-502		. . . CABINET ASSY-SERVICE, UPR PART used on 010C		001
030A	A225400414-552		. . . CABINET-SERVICE,CTR PART used on 010A, 010B		001

- ITEM NOT ILLUSTRATED

FIG. ITEM	PART NUMBER	AIRLINE STOCK NUMBER	NOMENCLATURE 1234567	EFF CODE	UNITS PER ASSY
-030B	A225400414-556		. . . CABINET-SERVICE,CTR PART used on 010C		001
040A	A225400415-510		. . . CABINET-SERVICE,LWR PART used on 010A, 010B		001
-040B	A225400415-512		. . . CABINET-SERVICE,LWR PART used on 010C		001
060A	NAS1096-2-7		. . . SCREW USE AS REQUIRED USAGE RANGE FROM 15 TO 17 BUY PN NAS1801-08-7 used on 010A, 010B, 010C		AR
070A	AN960C8		. . . WASHER USE AS REQUIRED USAGE RANGE FROM 21 TO 23 BUY PN NAS1149CN832R used on 010A, 010B		AR
-070B	NAS1149CN832R		. . . WASHER USE AS REQUIRED used on 010C		AR
090A	NAS1096-2-5		. . . SCREW BUY PN NAS1801-08-5 used on 010A, 010B, 010C		004
100A	5L0066500100000		. . . STRIP ASSY used on 010A		001
120A	A225400411-001		. . . ANGLE used on 010A, 010B, 010C		001
121A	A225400411-202		. . . . ANGLE used on 120A		001

- ITEM NOT ILLUSTRATED

FIG. ITEM	PART NUMBER	AIRLINE STOCK NUMBER	NOMENCLATURE 1234567	EFF CODE	UNITS PER ASSY
122A	244-20-102		. . . . CATCH-DOUBLE SPRING BALL used on 120A		001
123A	NAS1102-04-5		. . . . SCREW used on 120A		002
124A	AN960C4		. . . . WASHER BUY PN NAS1149CN432R used on 120A		002
125A	MS21042-04		. . . . NUT used on 120A		002
130A	A225400411-000		. . . ANGLE used on 010A, 010B, 010C		001
131A	A225400411-202		. . . . ANGLE used on 130A		001
132A	244-20-102		. . . . CATCH-DOUBLE SPRING BALL used on 130A		001
133A	NAS1102-04-5		. . . . SCREW used on 130A		002
134A	AN960C4		. . . . WASHER BUY PN NAS1149CN432R used on 130A		002
135A	MS21042-04		. . . . NUT used on 130A		002
140A	NAS1102-08-5		. . . SCREW used on 010A		002
145A	NAS1102-06-4		. . . SCREW used on 010B, 010C		004

- ITEM NOT ILLUSTRATED

FIG. ITEM	PART NUMBER	AIRLINE STOCK NUMBER	NOMENCLATURE 1234567	EFF CODE	UNITS PER ASSY
150A	MS21042-08		. . . NUT used on 010A, 010B, 010C		006
170A	5L0034600106000		. . . PIN-HINGE used on 010A, 010B, 010C		001
180A	A325400416-200		. . . HINGE used on 010A, 010B, 010C		001
190A	5L0034600111000		. . . BRACKET-ANGLE used on 010A, 010B, 010C		002
191A	A325400411-000		. . . ANGLE ASSY POST SB 25-1165 used on 010A, 010B, 010C		002
-193A	A325400411-200		. . . . ANGLE used on 191A		001
-196A	66333493		. . . . BUMPER BUY PN SJ5302TRANSPAR used on 191A		001
200A	NAS1102-08-7		. . . SCREW used on 010A, 010B, 010C		002
202A	NAS1096-3-8		. . . SCREW POST SB 25-1165 BUY PN NAS1801-3-8 used on 010A, 010B, 010C		002
203A	AN960C10		. . . WASHER POST SB 25-1165 BUY PN NAS1149C0363R used on 010A, 010B		004
-203B	NAS1149C0363R		. . . WASHER used on 010C		004

- ITEM NOT ILLUSTRATED

FIG. ITEM	PART NUMBER	AIRLINE STOCK NUMBER	NOMENCLATURE 1234567	EFF CODE	UNITS PER ASSY
204A	MS21042-3		. . . NUT POST SB 25-1165 used on 010A, 010B, 010C		002
205A	A325400411-202		. . . BLOCK POST SB 25-1165 used on 010A, 010B, 010C		001
206A	NAS514P832-16		. . . SCREW POST SB 25-1165 used on 010A, 010B, 010C		002
210A	343-5005		. . BOX-SERVICE used on 001A, 001B		002
220A	5L0009000600000		. . PANEL-PSU BUY PN A3-929-0009-502 used on 001A, 001B, 001C SEE SIL 23-016 FOR DET		001
223A	77409451		. . . FOIL BUY PN F1000403-02 used on 220A		001
225A	77408580		. . . FRAME-FRONT BUY PN F1000407-00 used on 220A		001
230A	5000A		. . . OUTLET-SHAVER used on 220A		001
240A	NAS1102-04-5		. . . SCREW used on 220A		004
250A	F1001019-00		. . . HOUSING-SIGN used on 220A		001
255A	F1000142-00		. . . . HOUSING ASSY used on 250A		001

- ITEM NOT ILLUSTRATED

FIG. ITEM	PART NUMBER	AIRLINE STOCK NUMBER	NOMENCLATURE 1234567	EFF CODE	UNITS PER ASSY
-257A	1280-06		. . . . LAMP used on 250A		004
260A	F1001020-00		. . . . LENS used on 250A		001
270A	NAS602-4		. . . SCREW BUY PN NAS602-4P used on 220A		006
-280A	77408147		. . . PCB-PRINTED CIRCUIT BOARD used on 220A		001

- ITEM NOT ILLUSTRATED

THIS PAGE IS INTENTIONALLY LEFT BLANK

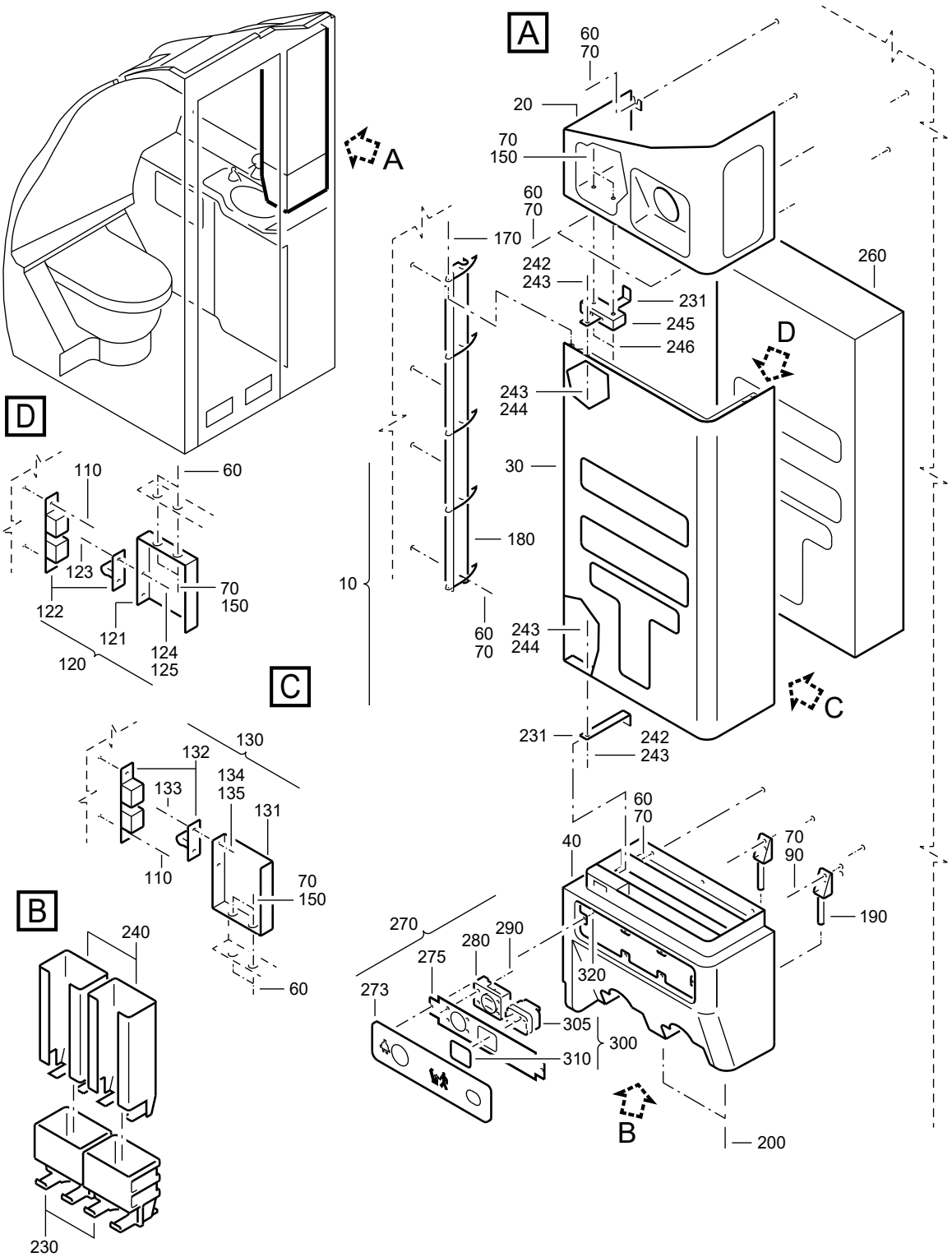

F_PL_254151_19_A_01_00

CABINET-SERVICE
Figure 19A/EN254151SHEET19A01

FIG. ITEM	PART NUMBER	AIRLINE STOCK NUMBER	NOMENCLATURE 1234567	EFF CODE	UNITS PER ASSY
19A					
-001A	D2549020602878		. CABINET-SERVICE NP used on 150C (25415101G) SEE 25-41-51-01G FOR NHA		RF
-001B	D2549020500278		. CABINET-SERVICE NP used on 150C (254151010), 150E (25415141T) SEE 25-41-51-010 FOR NHA SEE 25-41-51-41T FOR NHA		RF
-001C	D2549020600478		. CABINET-SERVICE NP used on 150E (254151410) PRE VSB A2-254-25-036 SEE 25-41-51-410 FOR NHA		RF
-001D	D2549010505678		. CABINET-SERVICE NP used on 150F (25415101D), 150F (25415101G) SEE 25-41-51-01D FOR NHA SEE 25-41-51-01G FOR NHA		RF
-001E	D2549030502678		. CABINET-SERVICE NP used on 150H (25415101F) SEE 25-41-51-01F FOR NHA		RF
-001F	R22540112800078		. CABINET-SERVICE NP used on 150H (254151410) POST VSB A2-254-25-036 SEE 25-41-51-410 FOR NHA		RF
010A	A225401412-568		. . CABINET ASSY-SERVICE used on 001A		001
-010B	A225401412-564		. . CABINET ASSY-SERVICE POST SB 25-1165 used on 001B		001
-010C	A225401412-566		. . CABINET ASSY-SERVICE used on 001C, 001F		001

- ITEM NOT ILLUSTRATED

FIG. ITEM	PART NUMBER	AIRLINE STOCK NUMBER	NOMENCLATURE 1234567	EFF CODE	UNITS PER ASSY
-010D	A225401412-562		. . CABINET ASSY-SERVICE used on 001D, 001E		001
020A	A225401413-504		. . . CABINET ASSY-SERVICE, UPR PART used on 010A		001
-020B	A225401413-506		. . . CABINET ASSY-SERVICE, UPR PART used on 010B		001
-020C	A225401413-508		. . . CABINET ASSY-SERVICE, UPR PART used on 010C		001
-020D	A225401413-502		. . . CABINET ASSY-SERVICE, UPR PART used on 010D		001
030A	A225400414-514		. . . CABINET-SERVICE,CTR PART used on 010A		001
-030B	A225400414-516		. . . CABINET-SERVICE,CTR PART used on 010B		001
-030C	A225400414-518		. . . CABINET-SERVICE,CTR PART used on 010C		001
-030D	A225400414-512		. . . CABINET-SERVICE,CTR PART used on 010D		001
040A	A225400415-558		. . . CABINET-SERVICE,LWR PART used on 010A		001

- ITEM NOT ILLUSTRATED

FIG. ITEM	PART NUMBER	AIRLINE STOCK NUMBER	NOMENCLATURE 1234567	EFF CODE	UNITS PER ASSY
-040B	A225400415-560		. . . CABINET-SERVICE,LWR PART used on 010B		001
-040C	A225400415-562		. . . CABINET-SERVICE,LWR PART used on 010C		001
-040D	A225400415-556		. . . CABINET-SERVICE,LWR PART used on 010D		001
060A	NAS1096-2-7		. . . SCREW BUY PN NAS1801-08-7 used on 010A, 010B, 010C, 010D		015
070A	AN960C8		. . . WASHER POST SB 25-1165 BUY PN NAS1149CN832R used on 010A, 010B, 010C, 010D		021
090A	NAS1096-2-5		. . . SCREW BUY PN NAS1801-08-5 used on 010A, 010B, 010C, 010D		004
110A	NAS1102-06-4		. . . SCREW used on 010A, 010B, 010C, 010D		004
120A	A225400411-001		. . . ANGLE POST SB 25-1165 used on 010A, 010B, 010C, 010D		001
121A	A225400411-202		. . . . ANGLE used on 120A		001
122A	244-20-102		. . . . CATCH-DOUBLE SPRING BALL used on 120A		001
123A	NAS1102-04-5		. . . . SCREW used on 120A		002

- ITEM NOT ILLUSTRATED

FIG. ITEM	PART NUMBER	AIRLINE STOCK NUMBER	NOMENCLATURE 1234567	EFF CODE	UNITS PER ASSY
124A	AN960C4		. . . . WASHER BUY PN NAS1149CN432R used on 120A		002
125A	MS21042-04		. . . . NUT used on 120A		002
130A	A225400411-000		. . . ANGLE POST SB 25-1165 used on 010A, 010B, 010C, 010D		001
131A	A225400411-202		. . . . ANGLE used on 130A		001
132A	244-20-102		. . . . CATCH-DOUBLE SPRING BALL used on 130A		001
133A	NAS1102-04-5		. . . . SCREW used on 130A		002
134A	AN960C4		. . . . WASHER BUY PN NAS1149CN432R used on 130A		002
135A	MS21042-04		. . . . NUT used on 130A		002
150A	MS21042-08		. . . NUT POST SB 25-1165 used on 010A, 010B, 010C, 010D		006
170A	5L0034600106000		. . . PIN-HINGE used on 010A, 010B, 010C, 010D		001
180A	A325400416-200		. . . HINGE used on 010A, 010B, 010C, 010D		001
190A	5L0034600111000		. . . BRACKET-ANGLE used on 010A, 010B, 010C, 010D		002

- ITEM NOT ILLUSTRATED

FIG. ITEM	PART NUMBER	AIRLINE STOCK NUMBER	NOMENCLATURE 1234567	EFF CODE	UNITS PER ASSY
200A	NAS1102-08-7		. . . SCREW used on 010A, 010B, 010C, 010D		002
230A	A325400410-502		. . . DISPENSER ASSY-SOAP used on 010A		002
-230B	A325400410-504		. . . DISPENSER ASSY-SOAP used on 010B		002
-230C	A325400410-506		. . . DISPENSER ASSY-SOAP used on 010C		002
-230D	A325400410-500		. . . DISPENSER ASSY-SOAP used on 010D		002
231A	A325400411-000		. . . ANGLE ASSY POST SB 25-1165 used on 010A, 010B, 010C, 010D		002
-233A	A325400411-200		. . . . ANGLE used on 231A		001
-236A	66333493		. . . . BUMPER BUY PN SJ5302TRANSPAR used on 231A		001
240A	5L0061000100000		. . . CHUTE used on 010A, 010B, 010C, 010D		002
242A	NAS1096-3-8		. . . SCREW POST SB 25-1165 BUY PN NAS1801-3-8 used on 010A, 010B, 010C, 010D		002
243A	AN960C10		. . . WASHER POST SB 25-1165 BUY PN NAS1149C0363R used on 010A, 010B, 010C, 010D		004

- ITEM NOT ILLUSTRATED

FIG. ITEM	PART NUMBER	AIRLINE STOCK NUMBER	NOMENCLATURE 1234567	EFF CODE	UNITS PER ASSY
244A	MS21042-3		. . . NUT POST SB 25-1165 used on 010A, 010B, 010C, 010D		002
245A	A325400411-202		. . . BLOCK POST SB 25-1165 used on 010A, 010B, 010C, 010D		001
246A	NAS514P832-16		. . . SCREW POST SB 25-1165 used on 010A, 010B, 010C, 010D		002
-250A	NSA935405-01		. . . MOUNT used on 010A, 010B, 010C, 010D		002
260A	A3-254-0012-206		. . BOX ASSY-SERVICE used on 001A		001
-260B	2892-016-00-000		. . BOX-SERVICE used on 001B		001
-260C	2892-015-00-000		. . BOX-SERVICE used on 001C, 001F		001
-260D	2892-009-00-000		. . BOX-SERVICE used on 001D, 001E		001
-260E	A3-254-0012-202		. . BOX ASSY-SERVICE used on 001D, 001E		001
-263A	Y4727DA2-8		. . . DRAWER used on 260E		001
-263B	Y4727DA2-12		. . . DRAWER used on 260A		001
-264A	Y1335		. . . GUIDE-DRAWER used on 260A, 260E		002
-265A	Y1336		. . . HOLDER-HANDLE used on 260A, 260E		002

- ITEM NOT ILLUSTRATED

FIG. ITEM	PART NUMBER	AIRLINE STOCK NUMBER	NOMENCLATURE 1234567	EFF CODE	UNITS PER ASSY
-266A	Y1853		. . . SCREW used on 260A, 260E		002
-267A	Y1827		. . . HANDLE used on 260A, 260E		001
-268A	DIN965M4X16		. . . SCREW used on 260A, 260E		004
270A	5L0009000800000		. . PANEL-PSU BUY PN A3-929-0009-503 used on 001C, 001D, 001F SEE SIL 23-016 FOR DET		001
-270B	5L0009000200000		. . PANEL-PSU BUY PN A3-929-0009-501 used on 001A, 001B SEE SIL 23-016 FOR DET		001
273A	77409453		. . . FOIL BUY PN F1000403-03 used on 270A		001
-273B	77408582		. . . FOIL BUY PN F1000403-01 used on 270B		001
275A	77408580		. . . FRAME-FRONT BUY PN F1000407-00 used on 270A, 270B		001
280A	5000A		. . . OUTLET-SHAVER used on 270A, 270B		001
290A	NAS1102-04-5		. . . SCREW used on 270A, 270B		004
300A	F1001019-00		. . . HOUSING-SIGN used on 270A, 270B		001

- ITEM NOT ILLUSTRATED

FIG. ITEM	PART NUMBER	AIRLINE STOCK NUMBER	NOMENCLATURE 1234567	EFF CODE	UNITS PER ASSY
305A	F1000142-00		. . . . HOUSING ASSY used on 300A		001
-307A	1280-06		. . . . LAMP used on 300A		004
310A	F1001020-00		. . . . LENS used on 300A		001
320A	NAS602-4		. . . SCREW BUY PN NAS602-4P used on 270A, 270B		006
-330A	77408147		. . . PCB-PRINTED CIRCUIT BOARD used on 270A, 270B		001
-340A	D2527811620000		. . LABEL POST VSB A2-254-25-036 used on 001F		001
-340B	D2527811622200		. . LABEL POST VSB A2-254-25-046 used on 001A		001
-340C	A825400501-214		. . LABEL POST VSB A2-254-25-131 used on 001E		001
-350A	A825400501-212		. . FILM-PROTECTIVE POST VSB A2-254-25-131 used on 001E		001

- ITEM NOT ILLUSTRATED

THIS PAGE IS INTENTIONALLY LEFT BLANK

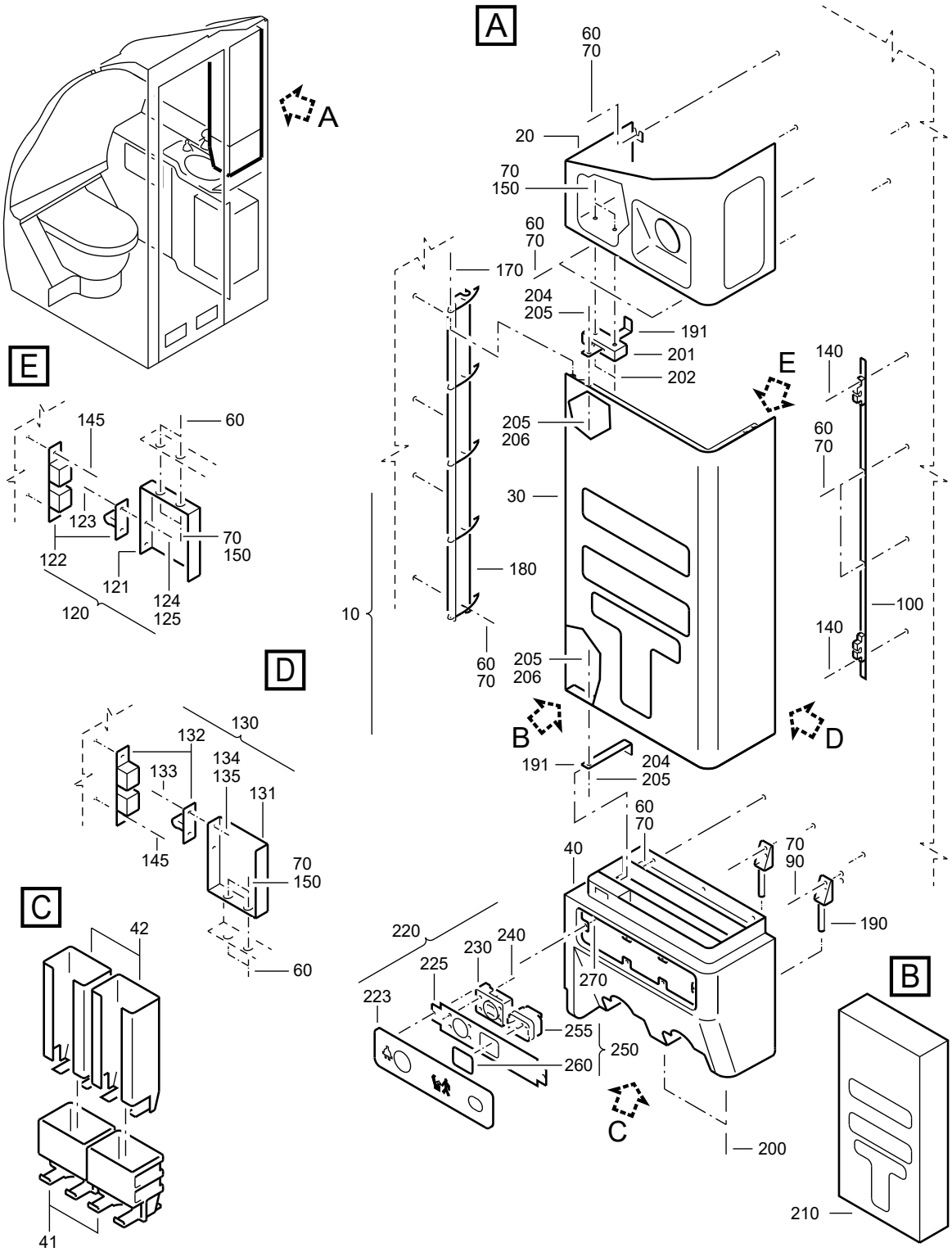

F_PL_254151_19_B_01_00

CABINET-SERVICE
Figure 19B/EN254151SHEET19B01

FIG. ITEM	PART NUMBER	AIRLINE STOCK NUMBER	NOMENCLATURE 1234567		EFF CODE	UNITS PER ASSY
19B						
-001A	D2549020500478		. CABINET-SERVICE used on 150G (254151010), 150A (25415101B) SEE 25-41-51-010 FOR NHA SEE 25-41-51-01B FOR NHA	NP		RF
-001B	D2549010500678		. CABINET-SERVICE PRE VSB A2-254-25-080 used on 150E (254151010), 150B (25415101A), 150G(25415101B), 150C (25415101C), 150D (25415101D) SEE 25-41-51-010 FOR NHA SEE 25-41-51-01A FOR NHA SEE 25-41-51-01B FOR NHA SEE 25-41-51-01C FOR NHA SEE 25-41-51-01D FOR NHA	NP		RF
-001C	D2549020503678		. CABINET-SERVICE PRE VSB A2-254-25-080 used on 150G (25415101A), 150H (25415101B), 150D (25415101C), 150A (25415101D), 150E (25415101E), 150D(25415101F), 150D (25415101H), 150F (25415101L) SEE 25-41-51-01A FOR NHA SEE 25-41-51-01B FOR NHA SEE 25-41-51-01C FOR NHA SEE 25-41-51-01D FOR NHA SEE 25-41-51-01E FOR NHA SEE 25-41-51-01F FOR NHA SEE 25-41-51-01H FOR NHA SEE 25-41-51-01L FOR NHA	NP		RF
-001D	D2549010502478		. CABINET-SERVICE used on 150F (25415101A) SEE 25-41-51-01A FOR NHA	NP		RF

- ITEM NOT ILLUSTRATED

FIG. ITEM	PART NUMBER	AIRLINE STOCK NUMBER	NOMENCLATURE 1234567		EFF CODE	UNITS PER ASSY
-001E	D2549020600078		. CABINET-SERVICE PRE VSB A2-254-25-059 used on 150E (25415101C), 150B (25415101D), 150H (25415101E), 150A (25415101F), 150F (25415101H), 150G (25415101K), 150E (25415101M) SEE 25-41-51-01C FOR NHA SEE 25-41-51-01D FOR NHA SEE 25-41-51-01E FOR NHA SEE 25-41-51-01F FOR NHA SEE 25-41-51-01H FOR NHA SEE 25-41-51-01K FOR NHA SEE 25-41-51-01M FOR NHA	NP		RF
-001F	D2549010504278		. CABINET-SERVICE PRE VSB A2-254-25-013 used on 150F (25415101C), 150A (25415101G), 150J (25415101K) SEE 25-41-51-01C FOR NHA SEE 25-41-51-01G FOR NHA SEE 25-41-51-01K FOR NHA	NP		RF
-001G	D2549010502878		. CABINET-SERVICE used on 150D (254151010), 150D (25415101A), 150C(25415101B), 150D (25415101E), 150E (25415101F) SEE 25-41-51-010 FOR NHA SEE 25-41-51-01A FOR NHA SEE 25-41-51-01B FOR NHA SEE 25-41-51-01E FOR NHA SEE 25-41-51-01F FOR NHA	NP		RF

- ITEM NOT ILLUSTRATED

FIG. ITEM	PART NUMBER	AIRLINE STOCK NUMBER	NOMENCLATURE 1234567		EFF CODE	UNITS PER ASSY
-001H	D2549020503078		. CABINET-SERVICE used on 150D (25415101B), 150C (25415101D), 150G (25415101E) SEE 25-41-51-01B FOR NHA SEE 25-41-51-01D FOR NHA SEE 25-41-51-01E FOR NHA	NP		RF
-001J	D2549020601078		. CABINET-SERVICE used on 150F (25415101F), 150D (25415101G), 150B(25415141B) SEE 25-41-51-01F FOR NHA SEE 25-41-51-01G FOR NHA SEE 25-41-51-41B FOR NHA	NP		RF
-001K	D2549030503478		. CABINET-SERVICE PRE VSB A2-254-25-013 PRE VSB A2-254-25-032 PRE VSB A2-254-25-080 used on 150E (25415101D), 150K (25415101F), 150B (25415101G), 150A (25415101H), 150E (25415101L) SEE 25-41-51-01D FOR NHA SEE 25-41-51-01F FOR NHA SEE 25-41-51-01G FOR NHA SEE 25-41-51-01H FOR NHA SEE 25-41-51-01L FOR NHA	NP		RF
-001L	D2549010504278		. CABINET-SERVICE POST VSB A2-254-25-013 used on 150G (25415101C) SEE 25-41-51-01C FOR NHA	NP		RF
-001M	D2549030503478		. CABINET-SERVICE POST VSB A2-254-25-013 used on 150G (25415101H), 150G (25415101L) SEE 25-41-51-01H FOR NHA SEE 25-41-51-01L FOR NHA	NP		RF

- ITEM NOT ILLUSTRATED

FIG. ITEM	PART NUMBER	AIRLINE STOCK NUMBER	NOMENCLATURE 1234567		EFF CODE	UNITS PER ASSY
-001N	D2549030503478		. CABINET-SERVICE POST VSB A2-254-25-032 used on 150H (25415101H), 150H (25415101L) SEE 25-41-51-01H FOR NHA SEE 25-41-51-01L FOR NHA	NP		RF
-001P	R22540114600078		. CABINET-SERVICE POST VSB A2-254-25-080 used on 150H (254151010), 150H (25415101A) SEE 25-41-51-010 FOR NHA SEE 25-41-51-01A FOR NHA	NP		RF
-001Q	R22540114500078		. CABINET-SERVICE POST VSB A2-254-25-080 used on 150G (25415101G) SEE 25-41-51-01G FOR NHA	NP		RF
-001R	R22540118800078		. CABINET-SERVICE POST VSB A2-254-25-080 used on 150J (25415101B), 150H (25415101D) SEE 25-41-51-01B FOR NHA SEE 25-41-51-01D FOR NHA	NP		RF
-001S	R22540113300078		. CABINET-SERVICE POST VSB A2-254-25-059 used on 150M (25415101F) SEE 25-41-51-01F FOR NHA	NP		RF
010A	A225401412-512		. . CABINET ASSY-SERVICE POST SB 25-1165 used on 001A			001
-010B	A225401412-510		. . CABINET ASSY-SERVICE POST SB 25-1165 used on 001B, 001H, 001P			001

- ITEM NOT ILLUSTRATED

FIG. ITEM	PART NUMBER	AIRLINE STOCK NUMBER	NOMENCLATURE 1234567	EFF CODE	UNITS PER ASSY
-010C	A225401412-514		. . CABINET ASSY-SERVICE used on 001C, 001E, 001F, 001J, 001K, 001L, 001M, 001N, 001Q, 001R, 001S		001
-010D	A225401412-558		. . CABINET ASSY-SERVICE used on 001D, 001G		001
020A	A225401413-506		. . . CABINET ASSY-SERVICE, UPR PART used on 010A		001
-020B	A225401413-502		. . . CABINET ASSY-SERVICE, UPR PART used on 010B, 010C, 010D		001
030A	A225400414-516		. . . CABINET-SERVICE,CTR PART used on 010A		001
-030B	A225400414-512		. . . CABINET-SERVICE,CTR PART used on 010B, 010C, 010D		001
040A	A225400415-514		. . . CABINET-SERVICE,LWR PART used on 010A		001
-040B	A225400415-512		. . . CABINET-SERVICE,LWR PART used on 010B, 010C		001
-040C	A225400415-556		. . . CABINET-SERVICE,LWR PART used on 010D		001
041A	A325400410-500		. . . DISPENSER ASSY-SOAP used on 010D		002
042A	5L0061000100000		. . . CHUTE used on 010D		002

- ITEM NOT ILLUSTRATED

FIG. ITEM	PART NUMBER	AIRLINE STOCK NUMBER	NOMENCLATURE 1234567	EFF CODE	UNITS PER ASSY
-043A	NSA935405-01		. . . MOUNT used on 010D		002
060A	NAS1096-2-7		. . . SCREW USE AS REQUIRED USAGE RANGE FROM 15 TO 17 BUY PN NAS1801-08-7 used on 010A, 010B, 010C, 010D		AR
070A	AN960C8		. . . WASHER USE AS REQUIRED POST SB 25-1165 USAGE RANGE FROM 21 TO 23 BUY PN NAS1149CN832R used on 010A, 010B, 010C, 010D		AR
090A	NAS1096-2-5		. . . SCREW BUY PN NAS1801-08-5 used on 010A, 010B, 010C, 010D		004
100A	5L0066500100000		. . . STRIP ASSY used on 010A, 010B, 010D		001
120A	A225400411-001		. . . ANGLE used on 010A, 010B, 010C, 010D		001
121A	A225400411-202		. . . . ANGLE used on 120A		001
122A	244-20-102		. . . . CATCH-DOUBLE SPRING BALL used on 120A		001
123A	NAS1102-04-5		. . . . SCREW used on 120A		002
124A	AN960C4		. . . . WASHER BUY PN NAS1149CN432R used on 120A		002

- ITEM NOT ILLUSTRATED

FIG. ITEM	PART NUMBER	AIRLINE STOCK NUMBER	NOMENCLATURE 1234567	EFF CODE	UNITS PER ASSY
125A	MS21042-04		. . . . NUT used on 120A		002
130A	A225400411-000		. . . ANGLE used on 010A, 010B, 010C, 010D		001
131A	A225400411-202		. . . . ANGLE used on 130A		001
132A	244-20-102		. . . . CATCH-DOUBLE SPRING BALL used on 130A		001
133A	NAS1102-04-5		. . . . SCREW used on 130A		002
134A	AN960C4		. . . . WASHER BUY PN NAS1149CN432R used on 130A		002
135A	MS21042-04		. . . . NUT used on 130A		002
140A	NAS1102-08-5		. . . SCREW used on 010A, 010B, 010D		002
145A	NAS1102-06-4		. . . SCREW used on 010C		004
150A	MS21042-08		. . . NUT POST SB 25-1165 used on 010A, 010B, 010C, 010D		006
170A	5L0034600106000		. . . PIN-HINGE used on 010A, 010B, 010C, 010D		001
180A	A325400416-200		. . . HINGE used on 010A, 010B, 010C, 010D		001
190A	5L0034600111000		. . . BRACKET-ANGLE used on 010A, 010B, 010C, 010D		002

- ITEM NOT ILLUSTRATED

FIG. ITEM	PART NUMBER	AIRLINE STOCK NUMBER	NOMENCLATURE 1234567	EFF CODE	UNITS PER ASSY
191A	A325400411-000		. . . ANGLE ASSY POST SB 25-1165 used on 010A, 010B, 010C, 010D		002
-193A	A325400411-200		. . . . ANGLE used on 191A		001
-196A	66333493		. . . . BUMPER BUY PN SJ5302TRANSPAR used on 191A		001
200A	NAS1102-08-7		. . . SCREW used on 010A, 010B, 010C, 010D		002
201A	A325400411-202		. . . BLOCK POST SB 25-1165 used on 010A, 010B, 010C, 010D		001
202A	NAS514P832-16		. . . SCREW POST SB 25-1165 used on 010A, 010B, 010C, 010D		002
204A	NAS1096-3-8		. . . SCREW POST SB 25-1165 BUY PN NAS1801-3-8 used on 010A, 010B, 010C, 010D		002
205A	AN960C10		. . . WASHER POST SB 25-1165 BUY PN NAS1149C0363R used on 010A, 010B, 010C, 010D		004
206A	MS21042-3		. . . NUT POST SB 25-1165 used on 010A, 010B, 010C, 010D		002
210A	2892-016-00-000		. . BOX-SERVICE used on 001A		001

- ITEM NOT ILLUSTRATED

FIG. ITEM	PART NUMBER	AIRLINE STOCK NUMBER	NOMENCLATURE 1234567	EFF CODE	UNITS PER ASSY
-210B	2892-009-00-000		. . BOX-SERVICE used on 001B, 001C, 001D, 001E, 001F, 001G, 001H, 001J, 001K, 001L, 001M, 001N, 001P, 001Q, 001R, 001S		001
-210C	A3-254-0012-202		. . BOX ASSY-SERVICE used on 001B, 001C, 001D, 001E, 001F, 001G, 001H, 001J, 001K, 001L, 001M, 001N, 001P, 001Q, 001R, 001S		001
-213A	Y4727DA2-8		. . . DRAWER used on 210C		001
-214A	Y1335		. . . GUIDE-DRAWER used on 210C		002
-215A	Y1336		. . . HOLDER-HANDLE used on 210C		002
-216A	Y1853		. . . SCREW used on 210C		002
-217A	Y1827		. . . HANDLE used on 210C		001
-218A	DIN965M4X16		. . . SCREW used on 210C		004
220A	5L0009000200000		. . PANEL-PSU BUY PN A3-929-0009-501 used on 001A, 001C, 001H, 001J, 001R SEE SIL 23-016 FOR DET		001
-220B	5L0009000700000		. . PANEL-PSU BUY PN A3-929-0009-501 PRE VSB A2-254-25-013 used on 001B, 001F, 001P SEE SIL 23-016 FOR DET		001

- ITEM NOT ILLUSTRATED

FIG. ITEM	PART NUMBER	AIRLINE STOCK NUMBER	NOMENCLATURE 1234567	EFF CODE	UNITS PER ASSY
-220C	5L0009000600000		. . PANEL-PSU BUY PN A3-929-0009-502 used on 001D SEE SIL 23-016 FOR DET		001
-220D	5L0009500100000		. . PANEL-PSU used on 001G SEE SIL 23-016 FOR DET		001
-220E	5L0009000800000		. . PANEL-PSU BUY PN A3-929-0009-503 PRE VSB A2-254-25-013 used on 001E, 001K, 001N, 001Q, 001S SEE SIL 23-016 FOR DET		001
-220F	5L0009000700000		. . PANEL-PSU POST VSB A2-254-25-013 used on 001L SEE SIL 23-016 FOR DET		001
-220G	5L0009000800000		. . PANEL-PSU POST VSB A2-254-25-013 used on 001M SEE SIL 23-016 FOR DET		001
223A	77409451		. . . FOIL BUY PN F1000403-02 used on 220C		001
-223B	77408582		. . . FOIL BUY PN F1000403-01 used on 220A, 220B, 220F		001
-223C	77409453		. . . FOIL BUY PN F1000403-03 used on 220E, 220G		001
-223D	774-099-90-68		. . . FOIL used on 220D		001

- ITEM NOT ILLUSTRATED

FIG. ITEM	PART NUMBER	AIRLINE STOCK NUMBER	NOMENCLATURE 1234567	EFF CODE	UNITS PER ASSY
225A	77408580		. . . FRAME-FRONT BUY PN F1000407-00 used on 220A, 220C, 220E, 220G		001
-225B	774-099-91-05		. . . FRAME ASSY-FRONT used on 220D		001
230A	5000A		. . . OUTLET-SHAVER used on 220A, 220B, 220C, 220E, 220F, 220G		001
-230B	BR5000-506		. . . OUTLET-SHAVER used on 220D		001
240A	NAS1102-04-5		. . . SCREW used on 220A, 220B, 220C, 220D, 220E, 220F, 220G		004
250A	F1001019-00		. . . HOUSING-SIGN used on 220A, 220B, 220C, 220D, 220E, 220F, 220G		001
255A	F1000142-00		. . . . HOUSING ASSY used on 250A		001
-257A	1280-06		. . . . LAMP used on 250A		004
260A	F1001020-00		. . . . LENS used on 250A		001
270A	NAS602-4		. . . SCREW BUY PN NAS602-4P used on 220A, 220B, 220C, 220D, 220E, 220F, 220G		006
-280A	77408147		. . . PCB-PRINTED CIRCUIT BOARD used on 220A, 220B, 220C, 220D, 220E, 220F, 220G		001

- ITEM NOT ILLUSTRATED

FIG. ITEM	PART NUMBER	AIRLINE STOCK NUMBER	NOMENCLATURE 1234567	EFF CODE	UNITS PER ASSY
-290A	A825400501-210		. . LABEL POST VSB A2-254-25-013 POST VSB A2-254-25-032 used on 001K, 001M, 001N		001
-290B	D2527811623000		. . LABEL POST VSB A2-254-25-080 used on 001P, 001Q, 001R		001
-290C	A825400501-214		. . LABEL POST VSB A2-254-25-059 used on 001S		001
-290D	D2527811625000		. . LABEL POST VSB A2-254-25-087 used on 001C		001
-290E	D2527811626200		. . LABEL POST VSB A2-254-25-057 used on 001H, 001J		001
-300A	A825400501-212		. . FILM-PROTECTIVE POST VSB A2-254-25-013 POST VSB A2-254-25-032 POST VSB A2-254-25-059 used on 001K, 001M, 001N, 001Q, 001S		001

- ITEM NOT ILLUSTRATED

THIS PAGE IS INTENTIONALLY LEFT BLANK

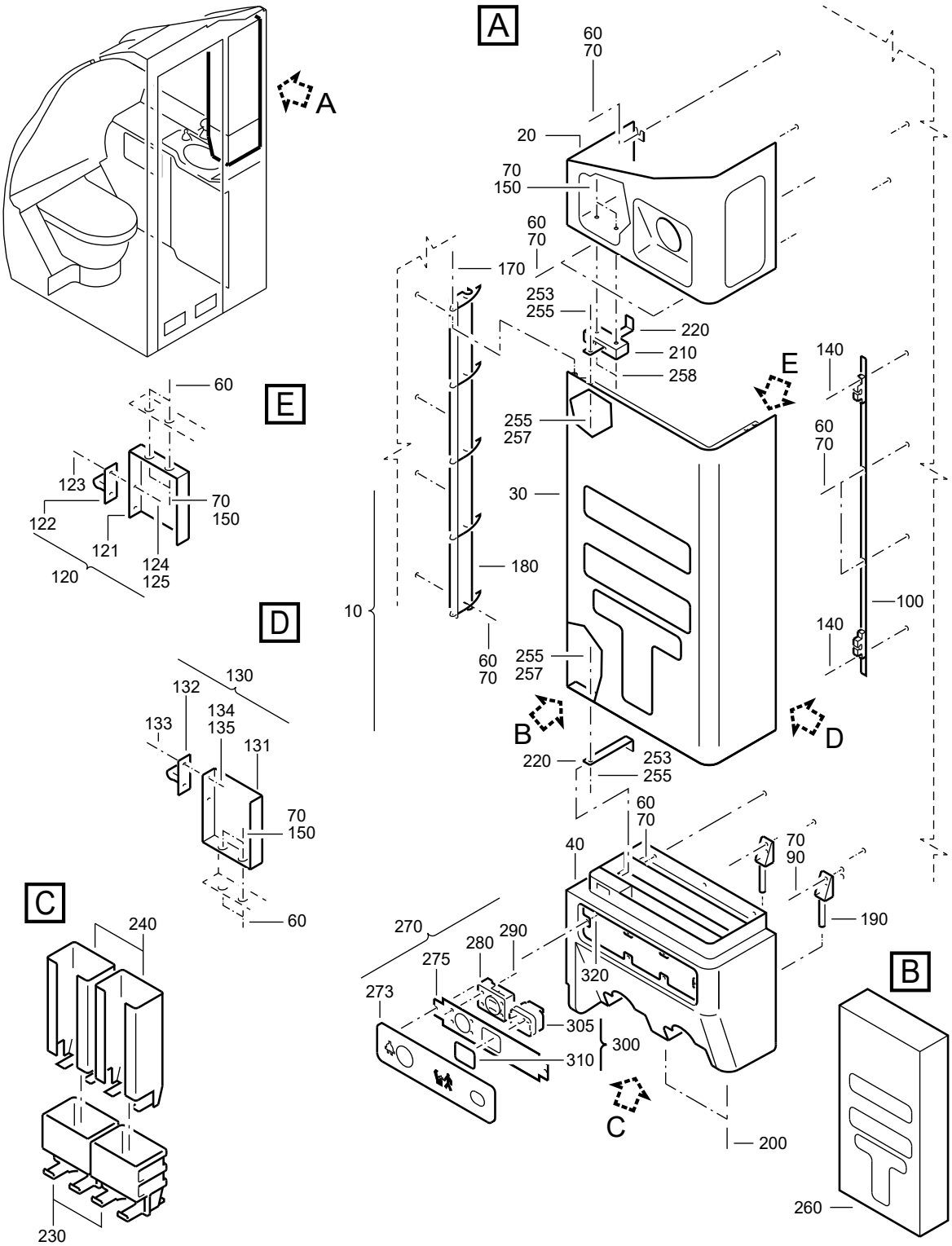

F_PL_254151_19_C_01_00

CABINET-SERVICE
Figure 19C/EN254151SHEET19C01

FIG. ITEM	PART NUMBER	AIRLINE STOCK NUMBER	NOMENCLATURE 1234567	EFF CODE	UNITS PER ASSY
19C					
-001A	D2549010501078		. CABINET-SERVICE NP used on 150F (254151010), 150A (25415101A), 150E(25415101B), 150A (25415101C), 150B (25415101E), 150B(25415101F), 150E (25415101G), 150C (25415101H), 150H(25415101K), 150D (25415141T) SEE 25-41-51-010 FOR NHA SEE 25-41-51-01A FOR NHA SEE 25-41-51-01B FOR NHA SEE 25-41-51-01C FOR NHA SEE 25-41-51-01E FOR NHA SEE 25-41-51-01F FOR NHA SEE 25-41-51-01G FOR NHA SEE 25-41-51-01H FOR NHA SEE 25-41-51-01K FOR NHA SEE 25-41-51-41T FOR NHA		RF
-001B	D2549010511278		. CABINET-SERVICE NP used on 150E (25415101H), 150B (25415101J) SEE 25-41-51-01H FOR NHA SEE 25-41-51-01J FOR NHA		RF
010A	A225401412-558		. . CABINET ASSY-SERVICE POST SB 25-1165 used on 001A, 001B		001
020A	A225401413-502		. . . CABINET ASSY-SERVICE, UPR PART used on 010A		001
030A	A225400414-512		. . . CABINET-SERVICE,CTR PART used on 010A		001

- ITEM NOT ILLUSTRATED

FIG. ITEM	PART NUMBER	AIRLINE STOCK NUMBER	NOMENCLATURE 1234567	EFF CODE	UNITS PER ASSY
040A	A225400415-556		. . . CABINET-SERVICE,LWR PART used on 010A		001
060A	NAS1096-2-7		. . . SCREW BUY PN NAS1801-08-7 used on 010A		017
070A	AN960C8		. . . WASHER POST SB 25-1165 BUY PN NAS1149CN832R used on 010A		023
090A	NAS1096-2-5		. . . SCREW BUY PN NAS1801-08-5 used on 010A		004
100A	5L0066500100000		. . . STRIP ASSY used on 010A		001
120A	A225400411-001		. . . ANGLE used on 010A		001
121A	A225400411-202		. . . . ANGLE used on 120A		001
122A	244-20-102		. . . . CATCH-DOUBLE SPRING BALL used on 120A		001
123A	NAS1102-04-5		. . . . SCREW used on 120A		002
124A	AN960C4		. . . . WASHER BUY PN NAS1149CN432R used on 120A		002
125A	MS21042-04		. . . . NUT used on 120A		002

- ITEM NOT ILLUSTRATED

FIG. ITEM	PART NUMBER	AIRLINE STOCK NUMBER	NOMENCLATURE 1234567	EFF CODE	UNITS PER ASSY
130A	A225400411-000		. . . ANGLE used on 010A		001
131A	A225400411-202		. . . . ANGLE used on 130A		001
132A	244-20-102		. . . . CATCH-DOUBLE SPRING BALL used on 130A		001
133A	NAS1102-04-5		. . . . SCREW used on 130A		002
134A	AN960C4		. . . . WASHER BUY PN NAS1149CN432R used on 130A		002
135A	MS21042-04		. . . . NUT used on 130A		002
140A	NAS1102-08-5		. . . SCREW used on 010A		002
150A	MS21042-08		. . . NUT POST SB 25-1165 used on 010A		006
170A	5L0034600106000		. . . PIN-HINGE used on 010A		001
180A	A325400416-200		. . . HINGE used on 010A		001
190A	5L0034600111000		. . . BRACKET-ANGLE used on 010A		002
200A	NAS1102-08-7		. . . SCREW used on 010A		002
210A	A325400411-202		. . . BLOCK POST SB 25-1165 used on 010A		001

- ITEM NOT ILLUSTRATED

FIG. ITEM	PART NUMBER	AIRLINE STOCK NUMBER	NOMENCLATURE 1234567	EFF CODE	UNITS PER ASSY
220A	A325400411-000		. . . ANGLE ASSY POST SB 25-1165 used on 010A		002
-223A	A325400411-200		. . . . ANGLE used on 220A		001
-226A	66333493		. . . . BUMPER BUY PN SJ5302TRANSPAR used on 220A		001
230A	A325400410-500		. . . DISPENSER ASSY-SOAP used on 010A		002
240A	5L0061000100000		. . . CHUTE used on 010A		002
-250A	NSA935405-01		. . . MOUNT used on 010A		002
253A	NAS1096-3-8		. . . SCREW POST SB 25-1165 BUY PN NAS1801-3-8 used on 010A		002
255A	AN960C10		. . . WASHER POST SB 25-1165 BUY PN NAS1149C0363R used on 010A		004
257A	MS21042-3		. . . NUT POST SB 25-1165 used on 010A		002
258A	NAS514P832-16		. . . SCREW POST SB 25-1165 used on 010A		002
260A	2892-009-00-000		. . BOX-SERVICE used on 001A, 001B		001

- ITEM NOT ILLUSTRATED

FIG. ITEM	PART NUMBER	AIRLINE STOCK NUMBER	NOMENCLATURE 1234567	EFF CODE	UNITS PER ASSY
-260B	A3-254-0012-202		. . BOX ASSY-SERVICE used on 001A, 001B		001
-263A	Y4727DA2-8		. . . DRAWER used on 260B		001
-264A	Y1335		. . . GUIDE-DRAWER used on 260B		002
-265A	Y1336		. . . HOLDER-HANDLE used on 260B		002
-266A	Y1853		. . . SCREW used on 260B		002
-267A	Y1827		. . . HANDLE used on 260B		001
-268A	DIN965M4X16		. . . SCREW used on 260B		004
270A	5L0009000700000		. . PANEL-PSU BUY PN A3-929-0009-501 used on 001A, 001B SEE SIL 23-016 FOR DET		001
273A	77408582		. . . FOIL BUY PN F1000403-01 used on 270A		001
275A	77408580		. . . FRAME-FRONT BUY PN F1000407-00 used on 270A		001
280A	5000A		. . . OUTLET-SHAVER used on 270A		001
290A	NAS1102-04-5		. . . SCREW used on 270A		004

- ITEM NOT ILLUSTRATED

FIG. ITEM	PART NUMBER	AIRLINE STOCK NUMBER	NOMENCLATURE 1234567	EFF CODE	UNITS PER ASSY
300A	F1001019-00		. . . HOUSING-SIGN used on 270A		001
305A	F1000142-00		. . . . HOUSING ASSY used on 300A		001
-307A	1280-06		. . . . LAMP used on 300A		004
310A	F1001020-00		. . . . LENS used on 300A		001
320A	NAS602-4		. . . SCREW BUY PN NAS602-4P used on 270A		006
-330A	77408147		. . . PCB-PRINTED CIRCUIT BOARD used on 270A		001
-340A	D2527811623800		. . LABEL POST VSB A2-254-25-078 used on 001A, 001B		001

- ITEM NOT ILLUSTRATED

THIS PAGE IS INTENTIONALLY LEFT BLANK

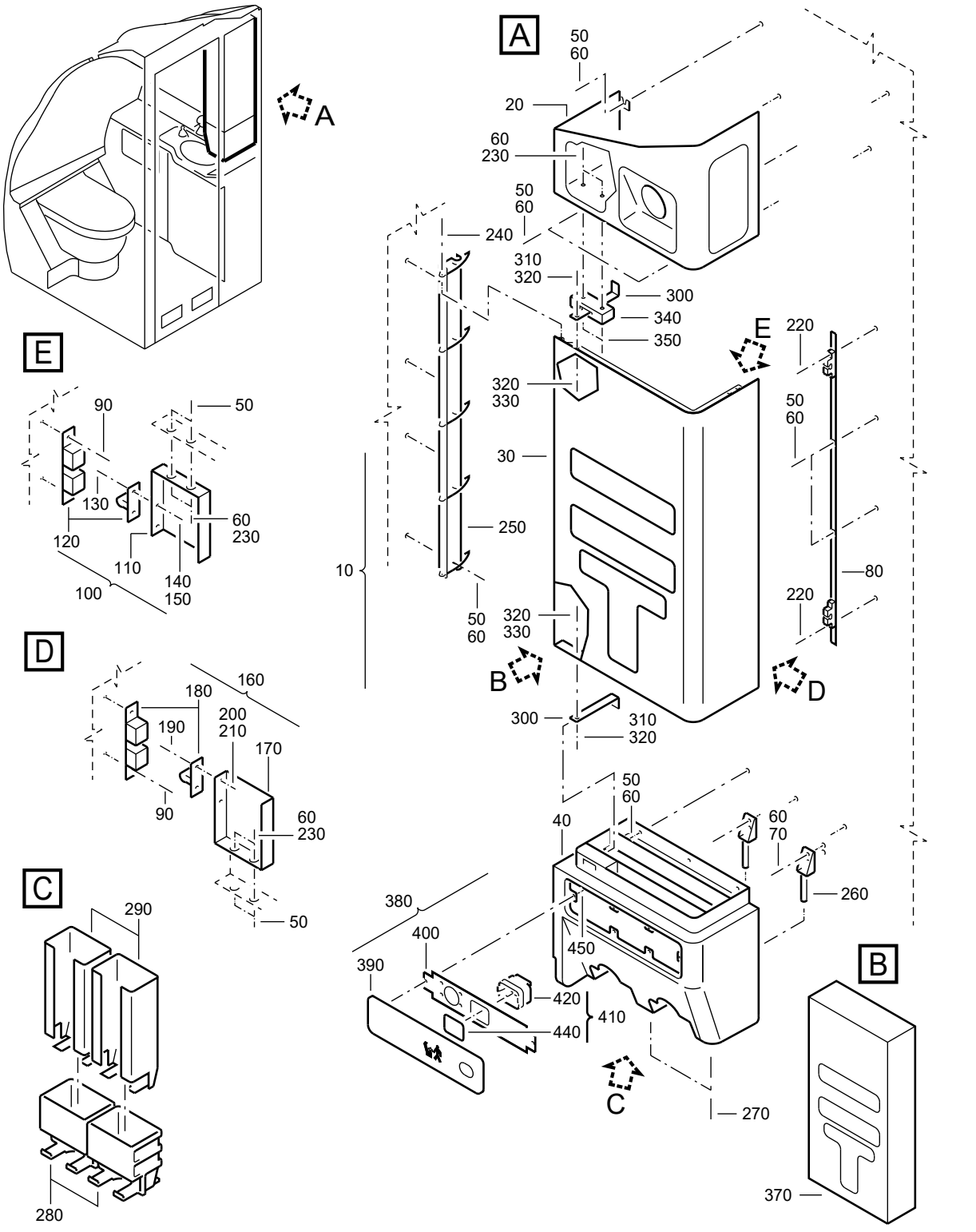

CABINET-SERVICE
Figure 19D/EN254151SHEET19D01

FIG. ITEM	PART NUMBER	AIRLINE STOCK NUMBER	NOMENCLATURE 1234567		EFF CODE	UNITS PER ASSY
19D						
-001A	D2549020500078		. CABINET-SERVICE used on 150B (254151010), 150E (25415101A), 150F(25415101B), 150C (25415101E), 150J (25415101F) SEE 25-41-51-010 FOR NHA SEE 25-41-51-01A FOR NHA SEE 25-41-51-01B FOR NHA SEE 25-41-51-01E FOR NHA SEE 25-41-51-01F FOR NHA	NP		RF
-001B	D2549030501878		. CABINET-SERVICE used on 150G (25415101D), 150C (25415101F) SEE 25-41-51-01D FOR NHA SEE 25-41-51-01F FOR NHA	NP		RF
-001C	D2549020602078		. CABINET-SERVICE used on 150G (25415101F), 150G (25415101N) SEE 25-41-51-01F FOR NHA SEE 25-41-51-01N FOR NHA	NP		RF
-001D	D2549020505278		. CABINET-SERVICE used on 150L (25415101F) SEE 25-41-51-01F FOR NHA	NP		RF
010A	A225401412-560		. . CABINET ASSY-SERVICE POST SB 25-1165 used on 001A, 001D			001
-010B	A225401412-516		. . CABINET ASSY-SERVICE used on 001B			001
-010C	A225401412-514		. . CABINET ASSY-SERVICE used on 001C			001

- ITEM NOT ILLUSTRATED

FIG. ITEM	PART NUMBER	AIRLINE STOCK NUMBER	NOMENCLATURE 1234567	EFF CODE	UNITS PER ASSY
020A	A225401413-504		. . . CABINET ASSY-SERVICE, UPR PART used on 010A, 010B		001
-020B	A225401413-502		. . . CABINET ASSY-SERVICE, UPR PART used on 010C		001
030A	A225400414-514		. . . CABINET-SERVICE,CTR PART used on 010A, 010B		001
-030B	A225400414-512		. . . CABINET-SERVICE,CTR PART used on 010C		001
040A	A225400415-558		. . . CABINET-SERVICE,LWR PART used on 010A		001
-040B	A225400415-522		. . . CABINET-SERVICE,LWR PART used on 010B		001
-040C	A225400415-512		. . . CABINET-SERVICE,LWR PART used on 010C		001
050A	NAS1096-2-7		. . . SCREW BUY PN NAS1801-08-7 used on 010A, 010B, 010C		017
060A	AN960C8		. . . WASHER BUY PN NAS1149CN832R used on 010A, 010B, 010C		025
070A	NAS1096-2-5		. . . SCREW BUY PN NAS1801-08-5 used on 010A, 010B, 010C		004

- ITEM NOT ILLUSTRATED

FIG. ITEM	PART NUMBER	AIRLINE STOCK NUMBER	NOMENCLATURE 1234567	EFF CODE	UNITS PER ASSY
080A	5L0066500100000		. . . STRIP ASSY used on 010A		001
090A	NAS1102-06-4		. . . SCREW used on 010B, 010C		004
100A	A225400411-001		. . . ANGLE used on 010A, 010B, 010C		001
110A	A225400411-202		. . . . ANGLE used on 100A		001
120A	244-20-102		. . . . CATCH-DOUBLE SPRING BALL used on 100A		001
130A	NAS1102-04-5		. . . . SCREW used on 100A		002
140A	AN960C4		. . . . WASHER BUY PN NAS1149CN432R used on 100A		002
150A	MS21042-04		. . . . NUT used on 100A		002
160A	A225400411-000		. . . ANGLE POST SB 25-1165 used on 010A, 010B, 010C		001
170A	A225400411-202		. . . . ANGLE used on 160A		001
180A	244-20-102		. . . . CATCH-DOUBLE SPRING BALL used on 160A		001
190A	NAS1102-04-5		. . . . SCREW used on 160A		002

- ITEM NOT ILLUSTRATED

FIG. ITEM	PART NUMBER	AIRLINE STOCK NUMBER	NOMENCLATURE 1234567	EFF CODE	UNITS PER ASSY
200A	AN960C4		. . . . WASHER BUY PN NAS1149CN432R used on 160A		002
210A	MS21042-04		. . . . NUT used on 160A		002
220A	NAS1102-08-5		. . . SCREW used on 010A		002
230A	MS21042-08		. . . NUT used on 010A, 010B, 010C		006
240A	5L0034600106000		. . . PIN-HINGE used on 010A, 010B, 010C		001
250A	A325400416-200		. . . HINGE used on 010A, 010B, 010C		001
260A	5L0034600111000		. . . BRACKET-ANGLE used on 010A, 010B, 010C		002
270A	NAS1102-08-7		. . . SCREW used on 010A, 010B, 010C		002
280A	A325400410-502		. . . DISPENSER ASSY-SOAP used on 010A		002
290A	5L0061000100000		. . . CHUTE used on 010A		002
300A	A325400411-000		. . . ANGLE ASSY used on 010A, 010B, 010C		002
-303A	A325400411-200		. . . . ANGLE used on 300A		001
-306A	66333493		. . . . BUMPER BUY PN SJ5302TRANSPAR used on 300A		001

- ITEM NOT ILLUSTRATED

FIG. ITEM	PART NUMBER	AIRLINE STOCK NUMBER	NOMENCLATURE 1234567	EFF CODE	UNITS PER ASSY
310A	NAS1096-3-8		. . . SCREW BUY PN NAS1801-3-8 used on 010A, 010B, 010C		002
320A	AN960C10		. . . WASHER BUY PN NAS1149C0363R used on 010A, 010B, 010C		004
330A	MS21042-3		. . . NUT used on 010A, 010B, 010C		002
340A	A325400411-202		. . . BLOCK used on 010A, 010B, 010C		001
350A	NAS514P832-16		. . . SCREW used on 010A, 010B, 010C		002
-360A	NSA935405-01		. . . MOUNT used on 010A, 010B, 010C		002
370A	2892-008-00-000		. . BOX-SERVICE used on 001A, 001B		001
-370B	A3-254-0012-202		. . BOX ASSY-SERVICE used on 001C		001
-370C	A3-254-0012-206		. . BOX ASSY-SERVICE used on 001D		001
-373A	Y4727DA2-8		. . . DRAWER used on 370B		001
-373B	Y4727DA2-12		. . . DRAWER used on 370C		001
-374A	Y1335		. . . GUIDE-DRAWER used on 370B, 370C		002
-375A	Y1336		. . . HOLDER-HANDLE used on 370B, 370C		002

- ITEM NOT ILLUSTRATED

FIG. ITEM	PART NUMBER	AIRLINE STOCK NUMBER	NOMENCLATURE 1234567	EFF CODE	UNITS PER ASSY
-376A	Y1853		. . . SCREW used on 370B, 370C		002
-377A	Y1827		. . . HANDLE used on 370B, 370C		001
-378A	DIN965M4X16		. . . SCREW used on 370B, 370C		004
380A	5L0009300100000		. . PANEL-PSU BUY PN A3-929-0009-53M used on 001A, 001B, 001C, 001D SEE SIL 23-016 FOR DET		001
390A	77409661		. . . FOIL BUY PN F1000403-05 used on 380A		001
400A	77409662		. . . FRAME-FRONT BUY PN F1000407-01 used on 380A		001
410A	F1001019-00		. . . HOUSING-SIGN used on 380A		001
420A	F1000142-00		. . . . HOUSING ASSY used on 410A		001
-430A	1280-06		. . . . LAMP used on 410A		004
440A	F1001020-00		. . . . LENS used on 410A		001
450A	NAS602-4		. . . SCREW BUY PN NAS602-4P used on 380A		006
-460A	77408147		. . . PCB-PRINTED CIRCUIT BOARD used on 380A		001

- ITEM NOT ILLUSTRATED

THIS PAGE IS INTENTIONALLY LEFT BLANK

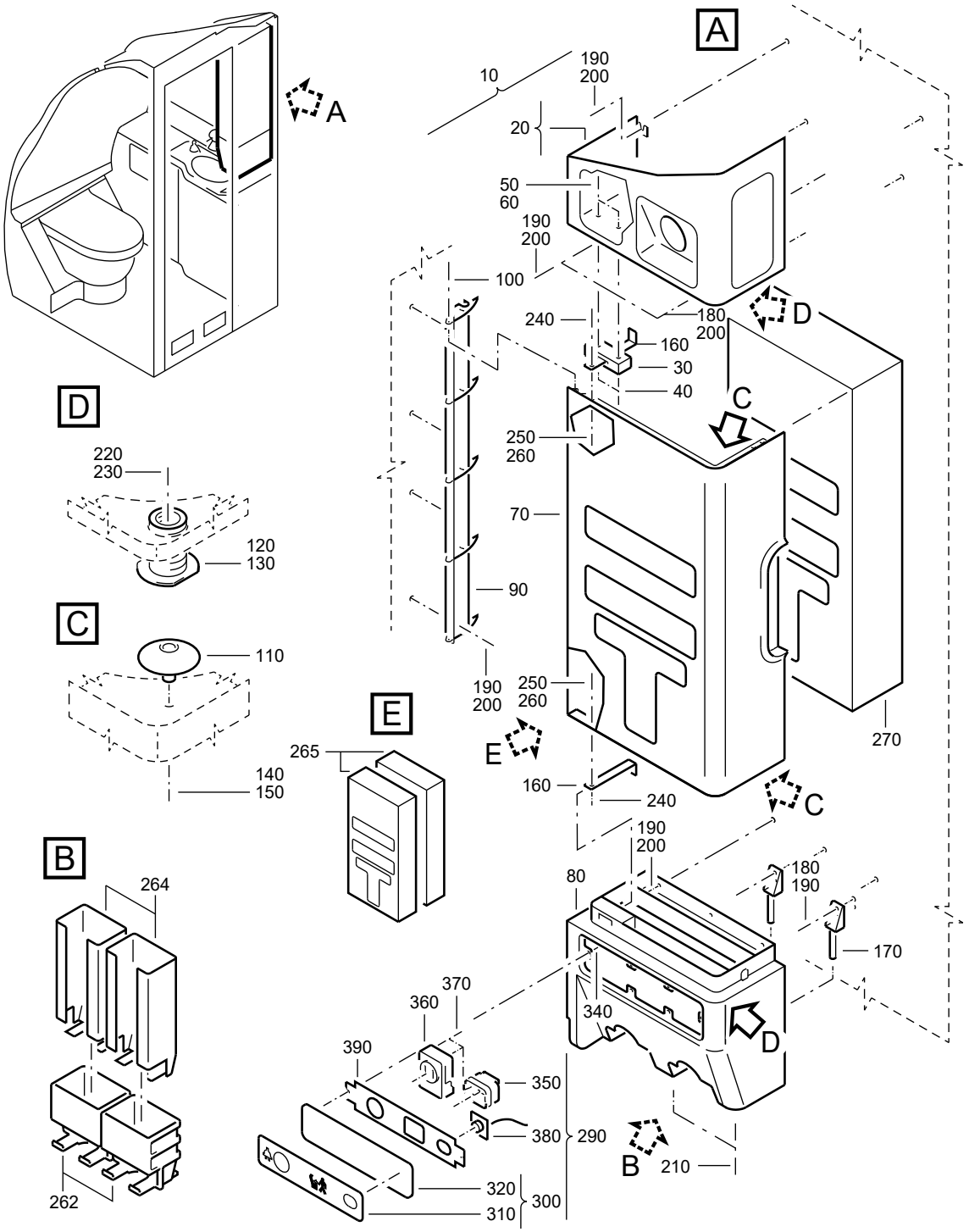

F_PL_254151_19_E_01_01

CABINET-SERVICE
Figure 19E/EN254151SHEET19E01

FIG. ITEM	PART NUMBER	AIRLINE STOCK NUMBER	NOMENCLATURE 1234567	EFF CODE	UNITS PER ASSY
19E -001A	D2549030504878		. CABINET-SERVICE NP PRE VSB A2-254-25-013 PRE VSB A2-254-25-015 PRE VSB A2-254-25-020 PRE VSB A2-254-25-029 PRE VSB A2-254-25-035 PRE VSB A2-254-25-039 PRE VSB A2-254-25-042 PRE VSB A2-254-25-032 PRE VSB A2-254-25-054 PRE VSB A2-254-25-077 PRE VSB A2-254-25-045 PRE VSB A2-254-25-080 PRE VSB A2-254-25-108 used on 150A (25415101J), 150E (25415101K), 150B(25415101L), 150B (25415101M), 150D (25415101N), 150C(25415101P), 150E (25415101Q), 150C (25415101S), 150B(25415101T), 150B (25415101U), 150D (25415101V), 150A (25415101W), 150B (25415101X), 150A (25415101Y), 150A(25415101Z), 150A (254151410), 150C (25415141A), 150E(25415141B), 150B (25415141C), 150B (25415141D), 150C(25415141F), 150C (25415141G), 150C (25415141H), 150A(25415141J), 150A (25415141K), 150A (25415141L), 150A(25415141M), 150F (25415141N), 150A (25415141P), 160A(25415141Q), 150B (25415141R), 150A (25415141S), 150A(25415141T), 150A (25415141U), 150B		RF

- ITEM NOT ILLUSTRATED

FIG. ITEM	PART NUMBER	AIRLINE STOCK NUMBER	NOMENCLATURE 1234567	EFF CODE	UNITS PER ASSY
			(25415141V), 150A (25415141W), 150A (25415141X), 150A (25415141Y), 150B(25415141Z), 150C (254151420), 150B (25415142A), 150A(25415142B), 150B (25415142C), 150B (25415142D), 150B(25415142E), 150A (25415142F), 150C (25415142G), 150B(25415142H), 150A (25415142J), 150A (25415142K), 150B(25415142L), 150B (25415142M), 150B (25415142N), 150C(25415142P), 150A (25415142Q), 150D (25415142R), 150A(25415142S), 150A (25415142T), 150A (25415142U) SEE 25-41-51-01J FOR NHA SEE 25-41-51-01K FOR NHA SEE 25-41-51-01L FOR NHA SEE 25-41-51-01M FOR NHA SEE 25-41-51-01N FOR NHA SEE 25-41-51-01P FOR NHA SEE 25-41-51-01Q FOR NHA SEE 25-41-51-01S FOR NHA SEE 25-41-51-01T FOR NHA SEE 25-41-51-01U FOR NHA SEE 25-41-51-01V FOR NHA SEE 25-41-51-01W FOR NHA SEE 25-41-51-01X FOR NHA SEE 25-41-51-01Y FOR NHA SEE 25-41-51-01Z FOR NHA SEE 25-41-51-410 FOR NHA SEE 25-41-51-41A FOR NHA SEE 25-41-51-41B FOR NHA SEE 25-41-51-41C FOR NHA SEE 25-41-51-41D FOR NHA SEE 25-41-51-41F FOR NHA SEE 25-41-51-41G FOR NHA		

- ITEM NOT ILLUSTRATED

FIG. ITEM	PART NUMBER	AIRLINE STOCK NUMBER	NOMENCLATURE 1234567	EFF CODE	UNITS PER ASSY
			SEE 25-41-51-41H FOR NHA SEE 25-41-51-41J FOR NHA SEE 25-41-51-41K FOR NHA SEE 25-41-51-41L FOR NHA SEE 25-41-51-41M FOR NHA SEE 25-41-51-41N FOR NHA SEE 25-41-51-41P FOR NHA SEE 25-41-51-41Q FOR NHA SEE 25-41-51-41R FOR NHA SEE 25-41-51-41S FOR NHA SEE 25-41-51-41T FOR NHA SEE 25-41-51-41U FOR NHA SEE 25-41-51-41V FOR NHA SEE 25-41-51-41W FOR NHA SEE 25-41-51-41X FOR NHA SEE 25-41-51-41Y FOR NHA SEE 25-41-51-41Z FOR NHA SEE 25-41-51-420 FOR NHA SEE 25-41-51-42A FOR NHA SEE 25-41-51-42B FOR NHA SEE 25-41-51-42C FOR NHA SEE 25-41-51-42D FOR NHA SEE 25-41-51-42E FOR NHA SEE 25-41-51-42F FOR NHA SEE 25-41-51-42G FOR NHA SEE 25-41-51-42H FOR NHA SEE 25-41-51-42J FOR NHA SEE 25-41-51-42K FOR NHA SEE 25-41-51-42L FOR NHA SEE 25-41-51-42M FOR NHA SEE 25-41-51-42N FOR NHA SEE 25-41-51-42P FOR NHA SEE 25-41-51-42Q FOR NHA SEE 25-41-51-42R FOR NHA SEE 25-41-51-42S FOR NHA SEE 25-41-51-42T FOR NHA SEE 25-41-51-42U FOR NHA		

- ITEM NOT ILLUSTRATED

FIG. ITEM	PART NUMBER	AIRLINE STOCK NUMBER	NOMENCLATURE 1234567	EFF CODE	UNITS PER ASSY
-001B	D2549030505278		. CABINET-SERVICE NP used on 150C (25415101J), 150B (25415101N), 150E(25415101S), 150E (25415101T), 150G (25415101V), 150D(254151410), 150A (25415141A), 150E (25415141J), 150B(25415141S), 150C (25415141T), 150B (25415141U), 150C(25415142C), 150C (25415142F), 150D (25415142H), 150C(25415142L), 150F (25415142T), 150E (25415142U) SEE 25-41-51-01J FOR NHA SEE 25-41-51-01N FOR NHA SEE 25-41-51-01S FOR NHA SEE 25-41-51-01T FOR NHA SEE 25-41-51-01V FOR NHA SEE 25-41-51-410 FOR NHA SEE 25-41-51-41A FOR NHA SEE 25-41-51-41J FOR NHA SEE 25-41-51-41S FOR NHA SEE 25-41-51-41T FOR NHA SEE 25-41-51-41U FOR NHA SEE 25-41-51-42C FOR NHA SEE 25-41-51-42F FOR NHA SEE 25-41-51-42H FOR NHA SEE 25-41-51-42L FOR NHA SEE 25-41-51-42T FOR NHA SEE 25-41-51-42U FOR NHA		RF

- ITEM NOT ILLUSTRATED

FIG. ITEM	PART NUMBER	AIRLINE STOCK NUMBER	NOMENCLATURE 1234567	EFF CODE	UNITS PER ASSY
-001C	D2549030504078		. CABINET-SERVICE NP PRE VSB A2-254-25-015 PRE VSB A2-254-25-022 PRE VSB A2-254-25-054 PRE VSB A2-254-25-106 used on 150D (25415101J), 150C (25415101K), 150C(25415101M), 150A (25415101N), 150G (25415101Q), 150A(25415101R), 150A (25415101T), 150F (25415101W), 150E(25415101X), 150B (254151410), 150D (25415141B), 150A(25415141D), 150E (25415141G), 150A (25415141H), 150D(25415141J), 150B (25415141L), 150F (25415141M), 150B(25415141N), 150B (25415141P), 150C (25415141S), 150C(25415141U), 150A (25415141V), 150B (25415141Y), 150A(25415141Z), 150A (25415142A), 150C (25415142B), 150A(25415142C), 150A (25415142D), 150E (25415142E), 150B(25415142F), 150A (25415142G), 150E (25415142H), 150C(25415142J), 150C (25415142K), 150A (25415142L), 150A(25415142M), 150A (25415142N), 150A (25415142P), 150C(25415142Q), 150C (25415142R), 150B (25415142S), 150C(25415142T), 150D (25415142U) SEE 25-41-51-01J FOR NHA SEE 25-41-51-01K FOR NHA SEE 25-41-51-01M FOR NHA SEE 25-41-51-01N FOR NHA SEE 25-41-51-01Q FOR NHA SEE 25-41-51-01R FOR NHA		RF

- ITEM NOT ILLUSTRATED

FIG. ITEM	PART NUMBER	AIRLINE STOCK NUMBER	NOMENCLATURE 1234567	EFF CODE	UNITS PER ASSY
			SEE 25-41-51-01T FOR NHA SEE 25-41-51-01W FOR NHA SEE 25-41-51-01X FOR NHA SEE 25-41-51-410 FOR NHA SEE 25-41-51-41B FOR NHA SEE 25-41-51-41D FOR NHA SEE 25-41-51-41G FOR NHA SEE 25-41-51-41H FOR NHA SEE 25-41-51-41J FOR NHA SEE 25-41-51-41L FOR NHA SEE 25-41-51-41M FOR NHA SEE 25-41-51-41N FOR NHA SEE 25-41-51-41P FOR NHA SEE 25-41-51-41S FOR NHA SEE 25-41-51-41U FOR NHA SEE 25-41-51-41V FOR NHA SEE 25-41-51-41Y FOR NHA SEE 25-41-51-41Z FOR NHA SEE 25-41-51-42A FOR NHA SEE 25-41-51-42B FOR NHA SEE 25-41-51-42C FOR NHA SEE 25-41-51-42D FOR NHA SEE 25-41-51-42E FOR NHA SEE 25-41-51-42F FOR NHA SEE 25-41-51-42G FOR NHA SEE 25-41-51-42H FOR NHA SEE 25-41-51-42J FOR NHA SEE 25-41-51-42K FOR NHA SEE 25-41-51-42L FOR NHA SEE 25-41-51-42M FOR NHA SEE 25-41-51-42N FOR NHA SEE 25-41-51-42P FOR NHA SEE 25-41-51-42Q FOR NHA SEE 25-41-51-42R FOR NHA SEE 25-41-51-42S FOR NHA SEE 25-41-51-42T FOR NHA SEE 25-41-51-42U FOR NHA		

- ITEM NOT ILLUSTRATED

FIG. ITEM	PART NUMBER	AIRLINE STOCK NUMBER	NOMENCLATURE 1234567	EFF CODE	UNITS PER ASSY
-001D	D2549020506278		. CABINET-SERVICE NP used on 150E (25415101J), 150B (25415101P), 150D(25415101T), 150F (25415101V), 150D (25415101W) SEE 25-41-51-01J FOR NHA SEE 25-41-51-01P FOR NHA SEE 25-41-51-01T FOR NHA SEE 25-41-51-01V FOR NHA SEE 25-41-51-01W FOR NHA		RF
-001E	D2549010509478		. CABINET-SERVICE NP used on 150F (25415101J), 150D (25415101P), 150G(25415101Y) SEE 25-41-51-01J FOR NHA SEE 25-41-51-01P FOR NHA SEE 25-41-51-01Y FOR NHA		RF
-001F	D2549030505478		. CABINET-SERVICE NP used on 150G (25415101J), 150A (25415101P), 150D(25415101Q), 150B (25415101Y), 150F (25415141B), 150F(25415141D), 150F (25415141G), 150F (25415141H), 150C(25415141M), 150D (25415141N), 150E (25415141W), 150D(25415141X) SEE 25-41-51-01J FOR NHA SEE 25-41-51-01P FOR NHA SEE 25-41-51-01Q FOR NHA SEE 25-41-51-01Y FOR NHA SEE 25-41-51-41B FOR NHA SEE 25-41-51-41D FOR NHA SEE 25-41-51-41G FOR NHA SEE 25-41-51-41H FOR NHA SEE 25-41-51-41M FOR NHA SEE 25-41-51-41N FOR NHA SEE 25-41-51-41W FOR NHA SEE 25-41-51-41X FOR NHA		RF

- ITEM NOT ILLUSTRATED

FIG. ITEM	PART NUMBER	AIRLINE STOCK NUMBER	NOMENCLATURE 1234567		EFF CODE	UNITS PER ASSY
-001G	D2549030505678		. CABINET-SERVICE used on 150A (25415101K), 150F (25415101P), 150F(25415101Y), 150A (25415141G), 150A (25415141R) SEE 25-41-51-01K FOR NHA SEE 25-41-51-01P FOR NHA SEE 25-41-51-01Y FOR NHA SEE 25-41-51-41G FOR NHA SEE 25-41-51-41R FOR NHA	NP		RF
-001H	D2549030504678		. CABINET-SERVICE used on 150B (25415101K), 150D (25415101U), 150D (25415101X), 150E (25415141C) SEE 25-41-51-01K FOR NHA SEE 25-41-51-01U FOR NHA SEE 25-41-51-01X FOR NHA SEE 25-41-51-41C FOR NHA	NP		RF
-001J	D2549010511478		. CABINET-SERVICE used on 150F (25415101K) SEE 25-41-51-01K FOR NHA	NP		RF

- ITEM NOT ILLUSTRATED

FIG. ITEM	PART NUMBER	AIRLINE STOCK NUMBER	NOMENCLATURE 1234567	EFF CODE	UNITS PER ASSY
-001K	D2549030506078		. CABINET-SERVICE NP used on 150A (25415101Q), 150G (25415101S), 150C (25415101V), 150B (25415101W), 150D (25415101Z), 150C(25415141B), 150C (25415141D), 150B (25415141G), 150E(25415141M), 150A (25415141N), 150C (25415141W) SEE 25-41-51-01Q FOR NHA SEE 25-41-51-01S FOR NHA SEE 25-41-51-01V FOR NHA SEE 25-41-51-01W FOR NHA SEE 25-41-51-01Z FOR NHA SEE 25-41-51-41B FOR NHA SEE 25-41-51-41D FOR NHA SEE 25-41-51-41G FOR NHA SEE 25-41-51-41M FOR NHA SEE 25-41-51-41N FOR NHA SEE 25-41-51-41W FOR NHA		RF

- ITEM NOT ILLUSTRATED

FIG. ITEM	PART NUMBER	AIRLINE STOCK NUMBER	NOMENCLATURE 1234567	EFF CODE	UNITS PER ASSY
-001L	D2549020605678		. CABINET-SERVICE NP used on 150D (25415101K), 150D (25415101M), 150B (25415101Q), 150C (25415101T), 150E (25415101V), 150G(25415141B), 150E (25415141D), 150G (25415141G), 150B(25415141K), 150D (25415141M), 150C (25415141N), 150B(25415141T), 150D (25415141W), 150C (25415141X), 150A(254151420), 150D (25415142E) SEE 25-41-51-01K FOR NHA SEE 25-41-51-01M FOR NHA SEE 25-41-51-01Q FOR NHA SEE 25-41-51-01T FOR NHA SEE 25-41-51-01V FOR NHA SEE 25-41-51-41B FOR NHA SEE 25-41-51-41D FOR NHA SEE 25-41-51-41G FOR NHA SEE 25-41-51-41K FOR NHA SEE 25-41-51-41M FOR NHA SEE 25-41-51-41N FOR NHA SEE 25-41-51-41T FOR NHA SEE 25-41-51-41W FOR NHA SEE 25-41-51-41X FOR NHA SEE 25-41-51-420 FOR NHA SEE 25-41-51-42E FOR NHA		RF

- ITEM NOT ILLUSTRATED

FIG. ITEM	PART NUMBER	AIRLINE STOCK NUMBER	NOMENCLATURE 1234567	EFF CODE	UNITS PER ASSY
-001M	D2549030505878		. CABINET-SERVICE NP used on 150H (25415101J), 150A (25415101M), 150E(25415101P), 150B (25415101S), 150F (25415101T), 150A(25415101U), 150A (25415101V), 150E (25415101W), 150B(25415101Z), 150H (25415141B), 150C (25415141C), 150D(25415141G), 150D (25415141H), 150B (25415141M), 150E(25415141N), 150E (25415141X), 150C (25415142E), 150B(25415142P) SEE 25-41-51-01J FOR NHA SEE 25-41-51-01M FOR NHA SEE 25-41-51-01P FOR NHA SEE 25-41-51-01S FOR NHA SEE 25-41-51-01T FOR NHA SEE 25-41-51-01U FOR NHA SEE 25-41-51-01V FOR NHA SEE 25-41-51-01W FOR NHA SEE 25-41-51-01Z FOR NHA SEE 25-41-51-41B FOR NHA SEE 25-41-51-41C FOR NHA SEE 25-41-51-41G FOR NHA SEE 25-41-51-41H FOR NHA SEE 25-41-51-41M FOR NHA SEE 25-41-51-41N FOR NHA SEE 25-41-51-41X FOR NHA SEE 25-41-51-42E FOR NHA SEE 25-41-51-42P FOR NHA		RF

- ITEM NOT ILLUSTRATED

FIG. ITEM	PART NUMBER	AIRLINE STOCK NUMBER	NOMENCLATURE 1234567	EFF CODE	UNITS PER ASSY
-001N	D2549010514078		. CABINET-SERVICE NP used on 150G (25415101P), 150F (25415101X), 150H (25415141N), 150D (254151420), 150B (25415142J) SEE 25-41-51-01P FOR NHA SEE 25-41-51-01X FOR NHA SEE 25-41-51-41N FOR NHA SEE 25-41-51-420 FOR NHA SEE 25-41-51-42J FOR NHA		RF
-001P	R22540163900078		. CABINET-SERVICE NP POST VSB A2-254-25-015 POST VSB A2-254-25-020 POST VSB A2-254-25-029 POST VSB A2-254-25-035 POST VSB A2-254-25-039 used on 150H (25415141H), 150F (25415141J), 150D (25415141V), 150D (25415141Y), 150C (25415142A), 150D (25415142B), 150F (25415142D), 150F (25415142H), 150C (25415142M), 150G (25415141X) SEE 25-41-51-41H FOR NHA SEE 25-41-51-41J FOR NHA SEE 25-41-51-41V FOR NHA SEE 25-41-51-41Y FOR NHA SEE 25-41-51-42A FOR NHA SEE 25-41-51-42B FOR NHA SEE 25-41-51-42D FOR NHA SEE 25-41-51-42H FOR NHA SEE 25-41-51-42M FOR NHA		RF

- ITEM NOT ILLUSTRATED

FIG. ITEM	PART NUMBER	AIRLINE STOCK NUMBER	NOMENCLATURE 1234567	EFF CODE	UNITS PER ASSY
-001Q	R22540168800078		. CABINET-SERVICE NP POST VSB A2-254-25-015 POST VSB A2-254-25-022 used on 150G (254151042L), 150H (25415142N) SEE 25-41-51-42L FOR NHA SEE 25-41-51-42N FOR NHA		RF
-001R	R22540114200078		. CABINET-SERVICE NP PRE VSB A2-254-25-130 POST VSB A2-254-25-042 used on 150H (25415101W), 150G (25415101X), 150F (254151410), 150F (25415141C), 150G (25415141F), 150C (25415141K), 150J (25415141N), 150D (25415141R), 150F (25415141W), 150F (25415141X), 150E (254151420), 150F (25415142E), 150D (25415142J), 150D (25415142P) SEE 25-41-51-01W FOR NHA SEE 25-41-51-01X FOR NHA SEE 25-41-51-041 FOR NHA SEE 25-41-51-041C FOR NHA SEE 25-41-51-041F FOR NHA SEE 25-41-51-041K FOR NHA SEE 25-41-51-041N FOR NHA SEE 25-41-51-041R FOR NHA SEE 25-41-51-041W FOR NHA SEE 25-41-51-041X FOR NHA SEE 25-41-51-042 FOR NHA SEE 25-41-51-042E FOR NHA SEE 25-41-51-042J FOR NHA SEE 25-41-51-042P FOR NHA		RF

- ITEM NOT ILLUSTRATED

FIG. ITEM	PART NUMBER	AIRLINE STOCK NUMBER	NOMENCLATURE 1234567		EFF CODE	UNITS PER ASSY
-001S	D2549030504878		. CABINET-SERVICE POST VSB A2-254-25-013 used on 150E (25415142D), 150E (25415142K) SEE 25-41-51-042D FOR NHA SEE 25-41-51-042K FOR NHA	NP		RF
-001T	R22540162900278		. CABINET-SERVICE POST VSB A2-254-25-077 used on 150D (25415141P), 150D (25415142C) SEE 25-41-51-41N FOR NHA SEE 25-41-51-42C FOR NHA	NP		RF
-001U	D2549030504878		. CABINET-SERVICE POST VSB A2-254-25-032 used on 150J (25415101L), 150G (254151410), 150E (25415141R), 150D (25415142M), 150H (25415142T) SEE 25-41-51-01L FOR NHA SEE 25-41-51-41R FOR NHA SEE 25-41-51-410 FOR NHA SEE 25-41-51-42M FOR NHA SEE 25-41-51-42T FOR NHA	NP		RF
-001V	R22540111500078		. CABINET-SERVICE POST VSB A2-254-25-054 used on 150K (25415141H), 150J (25415142T) SEE 25-41-51-41H FOR NHA SEE 25-41-51-42T FOR NHA	NP		RF

- ITEM NOT ILLUSTRATED

FIG. ITEM	PART NUMBER	AIRLINE STOCK NUMBER	NOMENCLATURE 1234567	EFF CODE	UNITS PER ASSY
-001W	R22540119500078		. CABINET-SERVICE NP POST VSB A2-254-25-054 used on 150E (25415101Z), 150D (25415141K), 150L (25415141N), 150E (25415141P), 150F (25415141R), 150H (25415141X), 150E (25415141Y), 150F (25415142G), 150F (25415142K), 150G (25415142S) SEE 25-41-51-01Z FOR NHA SEE 25-41-51-41K FOR NHA SEE 25-41-51-41N FOR NHA SEE 25-41-51-41P FOR NHA SEE 25-41-51-41R FOR NHA SEE 25-41-51-41X FOR NHA SEE 25-41-51-41Y FOR NHA SEE 25-41-51-42G FOR NHA SEE 25-41-51-42K FOR NHA SEE 25-41-51-42S FOR NHA		RF

- ITEM NOT ILLUSTRATED

FIG. ITEM	PART NUMBER	AIRLINE STOCK NUMBER	NOMENCLATURE 1234567	EFF CODE	UNITS PER ASSY
-001X	R22540114500278		. CABINET-SERVICE NP POST VSB A2-254-25-080 PRE VSB A2-254-25-108 used on 150F (25415101M), 150K (25415101Q), 150H (25415101V), 150J (25415101W), 150F (25415101Z), 150H (25415141C), 150J (25415141G), 150G (25415141J), 150E (25415141K), 150H (25415141M), 150G (25415141R), 150F (25415141T), 150K (25415141X), 150F (25415141Y), 150D (25415142A), 150E (25415142B), 150G (25415142G), 150G (25415142H), 150G (25415142K), 150E (25415142M), 150F (25415142Q), 150G (25415142R) SEE 25-41-51-01M FOR NHA SEE 25-41-51-01Q FOR NHA SEE 25-41-51-01V FOR NHA SEE 25-41-51-01W FOR NHA SEE 25-41-51-01Z FOR NHA SEE 25-41-51-41C FOR NHA SEE 25-41-51-41G FOR NHA SEE 25-41-51-41J FOR NHA SEE 25-41-51-41K FOR NHA SEE 25-41-51-41M FOR NHA SEE 25-41-51-41R FOR NHA SEE 25-41-51-41T FOR NHA SEE 25-41-51-41X FOR NHA SEE 25-41-51-41Y FOR NHA SEE 25-41-51-42A FOR NHA SEE 25-41-51-42B FOR NHA SEE 25-41-51-42G FOR NHA SEE 25-41-51-42H FOR NHA SEE 25-41-51-42K FOR NHA SEE 25-41-51-42M FOR NHA		RF

- ITEM NOT ILLUSTRATED

FIG. ITEM	PART NUMBER	AIRLINE STOCK NUMBER	NOMENCLATURE 1234567	EFF CODE	UNITS PER ASSY
			SEE 25-41-51-42Q FOR NHA SEE 25-41-51-42R FOR NHA		
-001Y	R22540119900278		. CABINET-SERVICE NP POST VSB A2-254-25-045 used on 150M (25415141H), 150H (25415141J), 150H (25415141R), 150G (25415141T), 150D (25415141U), 150H (25415141W), 150G (254151420), 150F (25415142B), 150E (25415142J), 150H (25415142L), 150F (25415142M), 150H (25415142R) SEE 25-41-51-41H FOR NHA SEE 25-41-51-41J FOR NHA SEE 25-41-51-41R FOR NHA SEE 25-41-51-41T FOR NHA SEE 25-41-51-41U FOR NHA SEE 25-41-51-41W FOR NHA SEE 25-41-51-420 FOR NHA SEE 25-41-51-42B FOR NHA SEE 25-41-51-42J FOR NHA SEE 25-41-51-42L FOR NHA SEE 25-41-51-42M FOR NHA SEE 25-41-51-42R FOR NHA		RF
-001Z	R22540166200078		. CABINET-SERVICE NP POST VSB A2-254-25-106 used on 150E (25415142C), 150H (25415142G), 150J (25415142L), 150K (25415142T) SEE 25-41-51-42C FOR NHA SEE 25-41-51-42G FOR NHA SEE 25-41-51-42L FOR NHA SEE 25-41-51-42T FOR NHA		RF

- ITEM NOT ILLUSTRATED

FIG. ITEM	PART NUMBER	AIRLINE STOCK NUMBER	NOMENCLATURE 1234567	EFF CODE	UNITS PER ASSY
-001AA	R22540114501478		. CABINET-SERVICE NP POST VSB A2-254-25-108 used on 150J (25415141C), 150J (25415141R) SEE 25-41-51-41C FOR NHA SEE 25-41-51-41R FOR NHA		RF
-001AB	R22540119604678		. CABINET-SERVICE NP POST VSB A2-254-25-130 used on 150J (254151410), 150F (25415141K), 150N (25415141N), 150K (25415141R), 150J (25415141W), 150L (25415141X), 150H (254151420), 150G (25415142E), 150F (25415142J), 150E (25415142P) SEE 25-41-51-410 FOR NHA SEE 25-41-51-41K FOR NHA SEE 25-41-51-41N FOR NHA SEE 25-41-51-41R FOR NHA SEE 25-41-51-41W FOR NHA SEE 25-41-51-41X FOR NHA SEE 25-41-51-420 FOR NHA SEE 25-41-51-42E FOR NHA SEE 25-41-51-42J FOR NHA SEE 25-41-51-42P FOR NHA		RF
010A	A225401412-700		. . CABINET ASSY-SERVICE PRE VSB A2-254-25-130 PRE VSB A2-254-25-106 used on 001A, 001C, 001M, 001P, 001Q, 001R, 001S, 001T, 001U, 001V, 001W, 001X, 001Y, 001AA		001
-010B	A225401412-750		. . CABINET ASSY-SERVICE used on 001B, 001E		001

- ITEM NOT ILLUSTRATED

FIG. ITEM	PART NUMBER	AIRLINE STOCK NUMBER	NOMENCLATURE 1234567	EFF CODE	UNITS PER ASSY
-010C	A225401412-756		. . CABINET ASSY-SERVICE used on 001D, 001L		001
-010D	A225401412-702		. . CABINET ASSY-SERVICE used on 001F		001
-010E	A225401412-704		. . CABINET ASSY-SERVICE used on 001G, 001N		001
-010F	A225401412-800		. . CABINET ASSY-SERVICE used on 001H		001
-010G	A225401412-706		. . CABINET ASSY-SERVICE used on 001K		001
-010H	A225401412-752		. . CABINET ASSY-SERVICE used on 001J		001
-010J	A225401412-728		. . CABINET ASSY-SERVICE POST VSB A2-254-25-106 used on 001Z		001
-010K	A225401412-730		. . CABINET ASSY-SERVICE POST VSB A2-254-25-130 used on 001AB		001
020A	A225401413-522		. . . CABINET ASSY-SERVICE, UPR PART BUY PN A225401492-500 used on 010A, 010B, 010J, 010K		001
-020B	A225401413-524		. . . CABINET ASSY-SERVICE, UPR PART used on 010C, 010D		001
-020C	A225401413-530		. . . CABINET ASSY-SERVICE, UPR PART used on 010E		001

- ITEM NOT ILLUSTRATED

FIG. ITEM	PART NUMBER	AIRLINE STOCK NUMBER	NOMENCLATURE 1234567	EFF CODE	UNITS PER ASSY
-020D	A225401413-520		. . . CABINET ASSY-SERVICE, UPR PART used on 010F		001
-020E	A225401413-532		. . . CABINET ASSY-SERVICE, UPR PART used on 010G		001
-020F	A225401413-526		. . . CABINET ASSY-SERVICE, UPR PART used on 010H		001
030A	A325400411-202		. . . . BLOCK used on 020A, 020B, 020C, 020D, 020E, 020F		001
040A	NAS514P832-16		. . . . SCREW used on 020A, 020B, 020C, 020D, 020E, 020F		002
050A	MS21042-08		. . . . NUT used on 020A, 020B, 020C, 020D, 020E, 020F		002
060A	NAS1149CN832R		. . . . WASHER used on 020A, 020B, 020C, 020D, 020E, 020F		002
070A	A225400414-700		. . . CABINET-SERVICE,CTR PART used on 010A, 010B, 010J, 010K		001
-070B	A225400414-702		. . . CABINET-SERVICE,CTR PART used on 010C, 010D		001
-070C	A225400414-718		. . . CABINET-SERVICE,CTR PART used on 010E		001

- ITEM NOT ILLUSTRATED

FIG. ITEM	PART NUMBER	AIRLINE STOCK NUMBER	NOMENCLATURE 1234567	EFF CODE	UNITS PER ASSY
-070D	A225400414-554		. . . CABINET-SERVICE,CTR PART used on 010F		001
-070E	A225400414-722		. . . CABINET-SERVICE,CTR PART used on 010G		001
-070F	A225400414-704		. . . CABINET-SERVICE,CTR PART used on 010H		001
080A	A225400415-802		. . . CABINET-SERVICE,LWR PART used on 010A, 010J, 010K		001
-080B	A225400415-850		. . . CABINET-SERVICE,LWR PART used on 010B		001
-080C	A225400415-852		. . . CABINET-SERVICE,LWR PART used on 010C		001
-080D	A225400415-812		. . . CABINET-SERVICE,LWR PART used on 010D		001
-080E	A225400415-816		. . . CABINET-SERVICE,LWR PART used on 010E		001
-080F	A225400415-800		. . . CABINET-SERVICE,LWR PART used on 010F		001
-080G	A225400415-820		. . . CABINET-SERVICE,LWR PART used on 010G		001

- ITEM NOT ILLUSTRATED

FIG. ITEM	PART NUMBER	AIRLINE STOCK NUMBER	NOMENCLATURE 1234567	EFF CODE	UNITS PER ASSY
-080H	A225400415-854		. . . CABINET-SERVICE,LWR PART used on 010H		001
090A	A325400416-200		. . . HINGE used on 010A, 010B, 010C, 010D, 010E, 010F, 010G, 010H, 010J, 010K		001
100A	5L0034600106000		. . . PIN-HINGE used on 010A, 010B, 010C, 010D, 010E, 010F, 010G, 010H, 010J, 010K		001
110A	A225400414-200		. . . BUSHING used on 010A, 010B, 010C, 010D, 010E, 010F, 010G, 010H, 010J, 010K		002
120A	A225400414-202		. . . BUSHING used on 010A, 010B, 010C, 010D, 010E, 010F, 010G, 010H, 010J, 010K		002
130A	1608011		. . . LATCH-SPRING-LOADED used on 010A, 010B, 010C, 010D, 010E, 010F, 010G, 010H, 010J, 010K		002
140A	NAS1100-04-3		. . . SCREW used on 010A, 010B, 010C, 010D, 010E, 010F, 010G, 010H, 010J, 010K		002
150A	NAS1149CN832R		. . . WASHER used on 010A, 010B, 010C, 010D, 010E, 010F, 010G, 010H, 010J, 010K		002

- ITEM NOT ILLUSTRATED

FIG. ITEM	PART NUMBER	AIRLINE STOCK NUMBER	NOMENCLATURE 1234567	EFF CODE	UNITS PER ASSY
160A	A325400411-000		. . . ANGLE ASSY used on 010A, 010B, 010C, 010D, 010E, 010F, 010G, 010H, 010J, 010K		002
-163A	A325400411-200		. . . . ANGLE used on 160A		001
-166A	66333493		. . . . BUMPER BUY PN SJ5302TRANSPAR used on 160A		001
170A	5L0034600111000		. . . BRACKET-ANGLE used on 010A, 010B, 010C, 010D, 010E, 010F, 010G, 010H, 010J, 010K		002
180A	NAS1096-2-5		. . . SCREW BUY PN NAS1801-08-5 PRE VSB A2-254-25-130 PRE VSB A2-254-25-106 used on 010A, 010B, 010C, 010D, 010E, 010F, 010G, 010H		005
-180B	NAS1801-08-5		. . . SCREW POST VSB A2-254-25-130 used on 010K		004
-180C	NAS1801-08-5		. . . SCREW POST VSB A2-254-25-106 used on 010J		002
-185A	NAS1102-08-10		. . . SCREW POST VSB A2-254-25-106 used on 010J		002
190A	NAS1149CN832R		. . . WASHER PRE VSB A2-254-25-106 used on 010A, 010B, 010C, 010D, 010E, 010F, 010G, 010H, 010J, 010K		019

- ITEM NOT ILLUSTRATED

FIG. ITEM	PART NUMBER	AIRLINE STOCK NUMBER	NOMENCLATURE 1234567	EFF CODE	UNITS PER ASSY
-190B	NAS1149CN832R		. . . WASHER POST VSB A2-254-25-106 used on 010J		017
-195A	ASNA0113-40ADL		. . . WASHER POST VSB A2-254-25-106 used on 010J		002
-197A	MS21042-08		. . . NUT POST VSB A2-254-25-106 used on 010J		002
200A	NAS1096-2-7		. . . SCREW BUY PN NAS1801-08-7 PRE VSB A2-254-25-130 PRE VSB A2-254-25-106 used on 010A, 010B, 010C, 010D, 010E, 010F, 010G, 010H		010
-200B	NAS1096-2-7		. . . SCREW BUY PN NAS1801-08-7 POST VSB A2-254-25-130 used on 010J, 010K		004
-205A	NAS1801-08-7		. . . SCREW POST VSB A2-254-25-130 POST VSB A2-254-25-106 used on 010J, 010K		007
210A	NAS1102-08-7		. . . SCREW used on 010A, 010B, 010C, 010D, 010E, 010F, 010G, 010H, 010J, 010K		002
220A	NAS1022N8		. . . NUT used on 010A, 010B, 010C, 010D, 010E, 010F, 010G, 010H, 010J, 010K		002

- ITEM NOT ILLUSTRATED

FIG. ITEM	PART NUMBER	AIRLINE STOCK NUMBER	NOMENCLATURE 1234567	EFF CODE	UNITS PER ASSY
230A	NAS1149C0832R		. . . WASHER used on 010A, 010B, 010C, 010D, 010E, 010F, 010G, 010H, 010J, 010K		002
240A	NAS1096-3-8		. . . SCREW BUY PN NAS1801-3-8 used on 010A, 010B, 010C, 010D, 010E, 010F, 010G, 010H, 010J, 010K		002
250A	NAS1149C0363R		. . . WASHER used on 010A, 010B, 010C, 010D, 010E, 010F, 010G, 010H, 010J, 010K		002
260A	MS21042-3		. . . NUT used on 010A, 010B, 010C, 010D, 010E, 010F, 010G, 010H, 010J, 010K		002
262A	A325400410-502		. . . DISPENSER ASSY-SOAP used on 010C		002
262B	A325400410-504		. . . DISPENSER ASSY-SOAP used on 010H		002
-262C	A325400410-500		. . . DISPENSER ASSY-SOAP used on 010B		002
264A	5L0061000100000		. . . CHUTE used on 010B, 010C, 010H		002
265A	343-5005		. . BOX-SERVICE used on 001H		002

- ITEM NOT ILLUSTRATED

FIG. ITEM	PART NUMBER	AIRLINE STOCK NUMBER	NOMENCLATURE 1234567	EFF CODE	UNITS PER ASSY
270A	A3-254-0012-202		. . BOX ASSY-SERVICE PRE VSB A2-254-25-130 used on 001A, 001B, 001C, 001E, 001M, 001P, 001Q, 001R, 001S, 001T, 001U, 001W, 001V, 001X, 001Y, 001Z, 001AA		001
-270B	A3-254-0012-206		. . BOX ASSY-SERVICE used on 001D, 001F, 001L		001
-270C	A3-254-0012-220		. . BOX ASSY-SERVICE used on 001G, 001N		001
-270D	A3-254-0012-228		. . BOX ASSY-SERVICE used on 001K		001
-270E	A3-254-0012-204		. . BOX ASSY-SERVICE used on 001J		001
-270F	A3-254-0012-332		. . BOX ASSY-SERVICE POST VSB A2-254-25-130 used on 001AB		001
-273A	Y4727DA2-8		. . . DRAWER PRE VSB A2-254-25-130 used on 270A		001
-273B	Y4727DA2-12		. . . DRAWER used on 270B		001
-273C	Y4727DA3-32		. . . DRAWER used on 270D		001
-273D	Y4727DA3-9		. . . DRAWER used on 270E		001
-273E	Y4727DA12-14		. . . DRAWER used on 270C		001

- ITEM NOT ILLUSTRATED

FIG. ITEM	PART NUMBER	AIRLINE STOCK NUMBER	NOMENCLATURE 1234567	EFF CODE	UNITS PER ASSY
-273F	Y4727DA2-49		. . . DRAWER POST VSB A2-254-25-130 used on 270F		001
-274A	Y1335		. . . GUIDE-DRAWER used on 270A, 270B, 270C, 270D, 270E, 270F		002
-275A	Y1336		. . . HOLDER-HANDLE used on 270A, 270B, 270C, 270D, 270E, 270F		002
-276A	Y1853		. . . SCREW used on 270A, 270B, 270C, 270D, 270E, 270F		002
-277A	Y1827		. . . HANDLE used on 270A, 270B, 270C, 270D, 270E, 270F		001
-278A	DIN965M4X16		. . . SCREW used on 270A, 270B, 270C, 270D, 270E, 270F		004
290A	A3-929-0009-003		. . PSU-PASSENGER SERVICE UNIT used on 001A, 001B, 001K, 001N, 001P, 001R, 001S, 001T, 001U, 001W, 001X, 001Y, 001AA, 001AB SEE SIL 23-016 FOR DET		001
-290B	A3-929-0009-001		. . PSU-PASSENGER SERVICE UNIT used on 001C, 001G, 001J, 001L, 001Q, 001V, 001Z SEE SIL 23-016 FOR DET		001

- ITEM NOT ILLUSTRATED

FIG. ITEM	PART NUMBER	AIRLINE STOCK NUMBER	NOMENCLATURE 1234567	EFF CODE	UNITS PER ASSY
-290C	A3-929-0009-03M		. . PSU-PASSENGER SERVICE UNIT used on 001D, 001F, 001M SEE SIL 23-016 FOR DET		001
-290D	A3-929-0009-01S		. . PSU-PASSENGER SERVICE UNIT used on 001E SEE SIL 23-016 FOR DET		001
-290E	A3-929-0009-002		. . PSU-PASSENGER SERVICE UNIT used on 001H SEE SIL 23-016 FOR DET		001
300A	F1000404-03		. . . FRAME ASSY-FRONT used on 290A		001
-300B	F1000404-01		. . . FRAME ASSY-FRONT used on 290B		001
-300C	F1000404-05		. . . FRAME ASSY-FRONT used on 290C		001
-300D	F1000404-02		. . . FRAME ASSY-FRONT used on 290E		001
-300E	774-099-91-05		. . . FRAME ASSY-FRONT used on 290D		001
310A	F1000403-03		. . . . FOIL used on 300A		001
-310B	F1000403-01		. . . . FOIL used on 300B		001
-310C	F1000403-05		. . . . FOIL used on 300C		001
-310D	F1000403-02		. . . . FOIL used on 300D		001

- ITEM NOT ILLUSTRATED

FIG. ITEM	PART NUMBER	AIRLINE STOCK NUMBER	NOMENCLATURE 1234567	EFF CODE	UNITS PER ASSY
310E	774-099-90-68		. . . . FOIL used on 300E		001
320A	F1000407-00		. . . . FRAME used on 300A, 300B, 300D, 300E		001
-320B	F1000407-01		. . . . FRAME used on 300C		001
340A	F1000408-01		. . . SCREW SET used on 290A, 290B, 290C, 290D, 290E		001
350A	F1001019-10		. . . HOUSING-SIGN used on 290A, 290B, 290C, 290D, 290E		001
360A	F1000440-00		. . . OUTLET-SHAVER used on 290A, 290B, 290E		001
-360B	BR5000-506		. . . OUTLET-SHAVER used on 290D		001
370A	F1000408-00		. . . SCREW SET used on 290A, 290B, 290D, 290E		001
380A	F1000457-00		. . . HARNESS-WIRE,CALL SWITCH used on 290A, 290B, 290D, 290E		001
-380B	F1000457-01		. . . HARNESS-WIRE,CALL SWITCH used on 290C		001
390A	F1000449-00		. . . BRACKET used on 290A, 290B, 290C, 290D, 290E		001

- ITEM NOT ILLUSTRATED

FIG. ITEM	PART NUMBER	AIRLINE STOCK NUMBER	NOMENCLATURE 1234567	EFF CODE	UNITS PER ASSY
-400A	A825400501-210		. . LABEL POST VSB A2-254-25-013 POST VSB A2-254-25-032 used on 001S, 001U		001
-400B	A825400501-214		. . LABEL POST VSB A2-254-25-130 POST VSB A2-254-25-154 POST VSB A2-254-25-015 POST VSB A2-254-25-020 POST VSB A2-254-25-022 POST VSB A2-254-25-029 POST VSB A2-254-25-035 POST VSB A2-254-25-039 POST VSB A2-254-25-032 POST VSB A2-254-25-077 POST VSB A2-254-25-106 POST VSB A2-254-25-108 POST VSB A2-254-25-131 used on 001A, 001B, 001C, 001P, 001Q, 001T, 001Z, 001AA, 001AB		001
-400C	D2527811620400		. . LABEL POST VSB A2-254-25-042 used on 001R		001
-400D	D2527811621600		. . LABEL POST VSB A2-254-25-054 used on 001V, 001W		001
-400E	D2527811623000		. . LABEL POST VSB A2-254-25-080 used on 001X		001
-400F	D2527811620800		. . LABEL POST VSB A2-254-25-045 used on 001Y		001

- ITEM NOT ILLUSTRATED

FIG. ITEM	PART NUMBER	AIRLINE STOCK NUMBER	NOMENCLATURE 1234567	EFF CODE	UNITS PER ASSY
-400G	D2527811622200		. . LABEL POST VSB A2-254-25-046 used on 001L		001
-400H	D2527811624000		. . LABEL POST VSB A2-254-25-064 used on 001C, 001Z		001
-400J	D2527811624200		. . LABEL POST VSB A2-254-25-069 used on 001A		001
-400K	D2527811625600		. . LABEL POST VSB A2-254-25-083 used on 001A		001
-400L	D2527811624400		. . LABEL POST VSB A2-254-25-085 used on 001C, 001Z		001
-400M	D2527811624600		. . LABEL POST VSB A2-254-25-093 used on 001A		001
-400N	D2527811622400		. . LABEL POST VSB A2-254-25-047 used on 001A, 001C		001
-400P	D2527811626200		. . LABEL POST VSB A2-254-25-057 used on 001A, 001K, 001M		001
-400Q	D2527811624800		. . LABEL POST VSB A2-254-25-070 used on 001A, 001C		001
-400R	D2527811627200		. . LABEL POST VSB A2-254-25-100 used on 001A, 001K		001

- ITEM NOT ILLUSTRATED

FIG. ITEM	PART NUMBER	AIRLINE STOCK NUMBER	NOMENCLATURE 1234567	EFF CODE	UNITS PER ASSY
-400S	D2527811626400		. . LABEL POST VSB A2-254-25-098 used on 001A		001
-400T	D2527811623200		. . LABEL POST VSB A2-254-25-073 used on 001C		001
-400U	D2527811627800		. . LABEL POST VSB A2-254-25-125 used on 001A		001
-410A	A825400501-212		. . FILM-PROTECTIVE POST VSB A2-254-25-130 POST VSB A2-254-25-154 POST VSB A2-254-25-013 POST VSB A2-254-25-015 POST VSB A2-254-25-020 POST VSB A2-254-25-022 POST VSB A2-254-25-029 POST VSB A2-254-25-035 POST VSB A2-254-25-039 POST VSB A2-254-25-032 POST VSB A2-254-25-077 POST VSB A2-254-25-106 POST VSB A2-254-25-108 POST VSB A2-254-25-131 used on 001A, 001B, 001C, 001P, 001Q, 001S, 001T, 001U, 001Z, 001AA, 001AB		001

- ITEM NOT ILLUSTRATED

THIS PAGE IS INTENTIONALLY LEFT BLANK

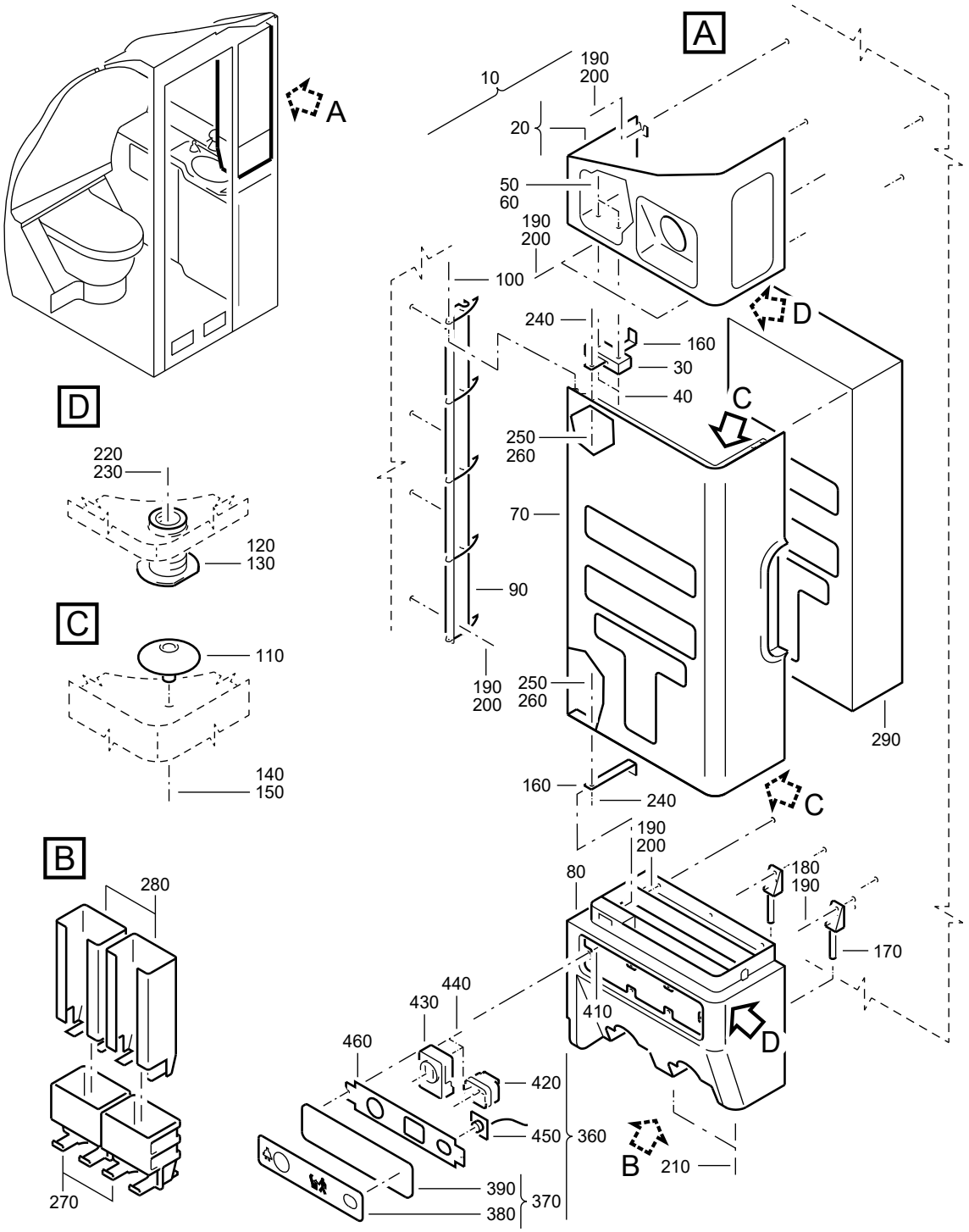

F_PL_254151_19_F_01_00

CABINET-SERVICE
Figure 19F/EN254151SHEET19F01

FIG. ITEM	PART NUMBER	AIRLINE STOCK NUMBER	NOMENCLATURE 1234567		EFF CODE	UNITS PER ASSY
19F						
-001A	D2549010510278		. CABINET-SERVICE used on 150A (25415101L), 150C (25415101Q), 150B(25415101R), 150G (25415101W), 150A (25415101X), 150C(25415101Y), 150A (25415141C) SEE 25-41-51-01L FOR NHA SEE 25-41-51-01Q FOR NHA SEE 25-41-51-01R FOR NHA SEE 25-41-51-01W FOR NHA SEE 25-41-51-01X FOR NHA SEE 25-41-51-01Y FOR NHA SEE 25-41-51-41C FOR NHA	NP		RF
-001B	D2549010513478		. CABINET-SERVICE used on 150D (25415101L), 150D (25415101S) SEE 25-41-51-01L FOR NHA SEE 25-41-51-01S FOR NHA	NP		RF
-001C	D2549020605878		. CABINET-SERVICE used on 150C (25415101L), 150D (25415141F), 150B(25415141H) SEE 25-41-51-01L FOR NHA SEE 25-41-51-41F FOR NHA SEE 25-41-51-41H FOR NHA	NP		RF
-001D	D2549010511878		. CABINET-SERVICE used on 150C (25415101N), 150F (25415141F) SEE 25-41-51-01N FOR NHA SEE 25-41-51-41F FOR NHA	NP		RF

- ITEM NOT ILLUSTRATED

FIG. ITEM	PART NUMBER	AIRLINE STOCK NUMBER	NOMENCLATURE 1234567	EFF CODE	UNITS PER ASSY
-001E	D2549020610278		. CABINET-SERVICE NP used on 150E (25415101N), 150A (25415101S), 150C (25415101W), 150D (25415101Y), 150C (254151410) SEE 25-41-51-01N FOR NHA SEE 25-41-51-01S FOR NHA SEE 25-41-51-01W FOR NHA SEE 25-41-51-01Y FOR NHA SEE 25-41-51-410 FOR NHA		RF
-001F	D2549010513878		. CABINET-SERVICE NP PRE VSB A2-254-25-037 used on 150F (25415101Q), 150F (25415101S), 150C(25415101U), 150B (25415101V), 150C (25415101Z), 150D(25415141A), 150A (25415141B), 150D (25415141D), 150B(25415141F), 150E (25415141H), 150C (25415141J), 150C(25415141L), 150G (25415142T) SEE 25-41-51-01Q FOR NHA SEE 25-41-51-01S FOR NHA SEE 25-41-51-01U FOR NHA SEE 25-41-51-01V FOR NHA SEE 25-41-51-01Z FOR NHA SEE 25-41-51-41A FOR NHA SEE 25-41-51-41B FOR NHA SEE 25-41-51-41D FOR NHA SEE 25-41-51-41F FOR NHA SEE 25-41-51-41H FOR NHA SEE 25-41-51-41J FOR NHA SEE 25-41-51-41L FOR NHA SEE 25-41-51-42T FOR NHA		RF

- ITEM NOT ILLUSTRATED

FIG. ITEM	PART NUMBER	AIRLINE STOCK NUMBER	NOMENCLATURE 1234567	EFF CODE	UNITS PER ASSY
-001G	D2549030507278		. CABINET-SERVICE NP PRE VSB A2-254-25-039 PRE VSB A2-254-25-054 used on 150F (25415101N), 150H (25415101Q), 150E (25415101U), 150C (25415101X), 150E (25415101Y), 150D(25415141C), 150A (25415141F), 150G (25415141H), 150G(25415141N), 150B (25415141W), 150B (25415141X), 150B(254151420) SEE 25-41-51-01N FOR NHA SEE 25-41-51-01Q FOR NHA SEE 25-41-51-01U FOR NHA SEE 25-41-51-01X FOR NHA SEE 25-41-51-01Y FOR NHA SEE 25-41-51-41C FOR NHA SEE 25-41-51-41F FOR NHA SEE 25-41-51-41H FOR NHA SEE 25-41-51-41N FOR NHA SEE 25-41-51-41W FOR NHA SEE 25-41-51-41X FOR NHA SEE 25-41-51-420 FOR NHA		RF
-001H	D2549020710078		. CABINET-SERVICE NP used on 150B (25415141A), 150B (25415141J), 150C(25415141V), 150C (25415141Y), 150B (25415142K) SEE 25-41-51-41A FOR NHA SEE 25-41-51-41J FOR NHA SEE 25-41-51-41V FOR NHA SEE 25-41-51-41Y FOR NHA SEE 25-41-51-42K FOR NHA		RF

- ITEM NOT ILLUSTRATED

FIG. ITEM	PART NUMBER	AIRLINE STOCK NUMBER	NOMENCLATURE 1234567		EFF CODE	UNITS PER ASSY
-001J	D2549020708078		. CABINET-SERVICE PRE VSB A2-254-25-044 used on 150H (25415141G), 150C (25415141P), 150D (25415142G), 150A (25415142H), 150F (25415142N), 150A(25415142R), 150C (25415142S), 150B (25415142T), 150B(25415142U) SEE 25-41-51-41G FOR NHA SEE 25-41-51-41P FOR NHA SEE 25-41-51-42G FOR NHA SEE 25-41-51-42H FOR NHA SEE 25-41-51-42N FOR NHA SEE 25-41-51-42R FOR NHA SEE 25-41-51-42S FOR NHA SEE 25-41-51-42T FOR NHA SEE 25-41-51-42U FOR NHA	NP		RF
-001K	D2549020510678		. CABINET-SERVICE used on 150C (25415141R), 150A (25415142E), 150D (25415142K), 150E (25415142L), 150B (25415142R), 150D (25415142T) SEE 25-41-51-41R FOR NHA SEE 25-41-51-42E FOR NHA SEE 25-41-51-42K FOR NHA SEE 25-41-51-42L FOR NHA SEE 25-41-51-42R FOR NHA SEE 25-41-51-42T FOR NHA	NP		RF
-001L	D2549010613278		. CABINET-SERVICE used on 150C (25415141Z), 150E (25415142G) SEE 25-41-51-41Z FOR NHA SEE 25-41-51-42G FOR NHA	NP		RF

- ITEM NOT ILLUSTRATED

FIG. ITEM	PART NUMBER	AIRLINE STOCK NUMBER	NOMENCLATURE 1234567		EFF CODE	UNITS PER ASSY
-001M	D2549030408278		. CABINET-SERVICE used on 150C (25415142D), 150D (25415142L), 150E (25415142N), 150E (25415142S) SEE 25-41-51-42D FOR NHA SEE 25-41-51-42L FOR NHA SEE 25-41-51-42N FOR NHA SEE 25-41-51-42S FOR NHA	NP		RF
-001N	R22540116800078		. CABINET-SERVICE POST VSB A2-254-25-039 used on 150J (25415141H), 150K (25415141N) SEE 25-41-51-41H FOR NHA SEE 25-41-51-41N FOR NHA	NP		RF
-001P	R22540117500278		. CABINET-SERVICE POST VSB A2-254-25-037 used on 150J (25415101Q), 150J (25415141B) SEE 25-41-51-01Q FOR NHA SEE 25-41-51-41B FOR NHA	NP		RF
-001Q	R22540180800078		. CABINET-SERVICE POST VSB A2-254-25-044 used on 150F (25415142R), 150F (25415142S) SEE 25-41-51-42R FOR NHA SEE 25-41-51-42S FOR NHA	NP		RF

- ITEM NOT ILLUSTRATED

FIG. ITEM	PART NUMBER	AIRLINE STOCK NUMBER	NOMENCLATURE 1234567	EFF CODE	UNITS PER ASSY
-001R	R22540116800478		. CABINET-SERVICE NP POST VSB A2-254-25-054 used on 150F (25415101U), 150H (25415101Y), 150G (25415141C), 150H (25415141F), 150L (25415141H), 150M (25415141N), 150G (25415141W), 150J (25415141X), 150F (254151420) SEE 25-41-51-01U FOR NHA SEE 25-41-51-01Y FOR NHA SEE 25-41-51-41C FOR NHA SEE 25-41-51-41F FOR NHA SEE 25-41-51-41H FOR NHA SEE 25-41-51-41N FOR NHA SEE 25-41-51-41W FOR NHA SEE 25-41-51-41X FOR NHA		RF
010A	A225401412-750		. . CABINET ASSY-SERVICE used on 001A, 001D		001
-010B	A225401412-752		. . CABINET ASSY-SERVICE used on 001B		001
-010C	A225401412-802		. . CABINET ASSY-SERVICE used on 001C		001
-010D	A225401412-712		. . CABINET ASSY-SERVICE used on 001E, 001J, 001Q		001
-010E	A225401412-708		. . CABINET ASSY-SERVICE used on 001F, 001P		001
-010F	A225401412-710		. . CABINET ASSY-SERVICE used on 001G, 001N, 001R		001
-010G	A225401412-714		. . CABINET ASSY-SERVICE used on 001H, 001K		001

- ITEM NOT ILLUSTRATED

FIG. ITEM	PART NUMBER	AIRLINE STOCK NUMBER	NOMENCLATURE 1234567	EFF CODE	UNITS PER ASSY
-010H	A225401412-758		. . CABINET ASSY-SERVICE used on 001L		001
-010J	A225401412-716		. . CABINET ASSY-SERVICE used on 001M		001
020A	A225401413-522		. . . CABINET ASSY-SERVICE, UPR PART BUY PN A225401492-500 used on 010A, 010C		001
-020B	A225401413-526		. . . CABINET ASSY-SERVICE, UPR PART used on 010B		001
-020C	A225401413-538		. . . CABINET ASSY-SERVICE, UPR PART used on 010D, 010H		001
-020D	A225401413-534		. . . CABINET ASSY-SERVICE, UPR PART used on 010E		001
-020E	A225401413-536		. . . CABINET ASSY-SERVICE, UPR PART used on 010F		001
-020F	A225401413-540		. . . CABINET ASSY-SERVICE, UPR PART used on 010G		001
-020G	A225401413-542		. . . CABINET ASSY-SERVICE, UPR PART used on 010J		001
030A	A325400411-202		. . . . BLOCK used on 020A, 020B, 020C, 020D, 020E, 020F, 020G		001

- ITEM NOT ILLUSTRATED

FIG. ITEM	PART NUMBER	AIRLINE STOCK NUMBER	NOMENCLATURE 1234567	EFF CODE	UNITS PER ASSY
040A	NAS514P832-16		. . . . SCREW used on 020A, 020B, 020C, 020D, 020E, 020F, 020G		002
050A	MS21042-08		. . . . NUT used on 020A, 020B, 020C, 020D, 020E, 020F, 020G		002
060A	NAS1149CN832R		. . . . WASHER used on 020A, 020B, 020C, 020D, 020E, 020F, 020G		002
070A	A225400414-700		. . . CABINET-SERVICE,CTR PART used on 010A		001
-070B	A225400414-704		. . . CABINET-SERVICE,CTR PART used on 010B		001
-070C	A225400414-558		. . . CABINET-SERVICE,CTR PART used on 010C		001
-070D	A225400414-726		. . . CABINET-SERVICE,CTR PART used on 010D		001
-070E	A225400414-724		. . . CABINET-SERVICE,CTR PART used on 010E		001
-070F	A225400414-720		. . . CABINET-SERVICE,CTR PART used on 010F		001
-070G	A225400414-730		. . . CABINET-SERVICE,CTR PART used on 010G		001

- ITEM NOT ILLUSTRATED

FIG. ITEM	PART NUMBER	AIRLINE STOCK NUMBER	NOMENCLATURE 1234567	EFF CODE	UNITS PER ASSY
-070H	A225400414-732		. . . CABINET-SERVICE,CTR PART used on 010H		001
-070J	A225400414-738		. . . CABINET-SERVICE,CTR PART used on 010J		001
080A	A225400415-850		. . . CABINET-SERVICE,LWR PART used on 010A		001
-080B	A225400415-854		. . . CABINET-SERVICE,LWR PART used on 010B		001
-080C	A225400415-802		. . . CABINET-SERVICE,LWR PART used on 010C		001
-080D	A225400415-824		. . . CABINET-SERVICE,LWR PART used on 010D		001
-080E	A225400415-822		. . . CABINET-SERVICE,LWR PART used on 010E		001
-080F	A225400415-818		. . . CABINET-SERVICE,LWR PART used on 010F		001
-080G	A225400415-828		. . . CABINET-SERVICE,LWR PART used on 010G		001
-080H	A225400415-868		. . . CABINET-SERVICE,LWR PART used on 010H		001

- ITEM NOT ILLUSTRATED

FIG. ITEM	PART NUMBER	AIRLINE STOCK NUMBER	NOMENCLATURE 1234567	EFF CODE	UNITS PER ASSY
-080J	A225400415-834		. . . CABINET-SERVICE,LWR PART used on 010J		001
090A	A325400416-200		. . . HINGE used on 010A, 010B, 010C, 010D, 010E, 010F, 010G, 010H, 010J		001
100A	5L0034600106000		. . . PIN-HINGE used on 010A, 010B, 010C, 010D, 010E, 010F, 010G, 010H, 010J		001
110A	A225400414-200		. . . BUSHING used on 010A, 010B, 010C, 010D, 010E, 010F, 010G, 010H, 010J		002
120A	A225400414-202		. . . BUSHING used on 010A, 010B, 010C, 010D, 010E, 010F, 010G, 010H, 010J		002
130A	1608011		. . . LATCH-SPRING-LOADED used on 010A, 010B, 010C, 010D, 010E, 010F, 010G, 010H, 010J		002
140A	NAS1100-04-3		. . . SCREW used on 010A, 010B, 010C, 010D, 010E, 010F, 010G, 010H, 010J		002
150A	NAS1149CN832R		. . . WASHER used on 010A, 010B, 010C, 010D, 010E, 010F, 010G, 010H, 010J		002

- ITEM NOT ILLUSTRATED

FIG. ITEM	PART NUMBER	AIRLINE STOCK NUMBER	NOMENCLATURE 1234567	EFF CODE	UNITS PER ASSY
160A	A325400411-000		. . . ANGLE ASSY used on 010A, 010B, 010C, 010D, 010E, 010F, 010G, 010H, 010J		002
-163A	A325400411-200		. . . . ANGLE used on 160A		001
-166A	66333493		. . . . BUMPER BUY PN SJ5302TRANSPAR used on 160A		001
170A	5L0034600111000		. . . BRACKET-ANGLE used on 010A, 010B, 010C, 010D, 010E, 010F, 010G, 010H, 010J		002
180A	NAS1096-2-5		. . . SCREW BUY PN NAS1801-08-5 used on 010A, 010B, 010C, 010D, 010E, 010F, 010G, 010H, 010J		004
190A	NAS1149CN832R		. . . WASHER used on 010A, 010B, 010C, 010D, 010E, 010F, 010G, 010H, 010J		019
200A	NAS1096-2-7		. . . SCREW BUY PN NAS1801-08-7 used on 010A, 010B, 010C, 010D, 010E, 010F, 010G, 010H, 010J		011
210A	NAS1102-08-7		. . . SCREW used on 010A, 010B, 010C, 010D, 010E, 010F, 010G, 010H, 010J		002

- ITEM NOT ILLUSTRATED

FIG. ITEM	PART NUMBER	AIRLINE STOCK NUMBER	NOMENCLATURE 1234567	EFF CODE	UNITS PER ASSY
220A	NAS1022N8		. . . NUT used on 010A, 010B, 010C, 010D, 010E, 010F, 010G, 010H, 010J		002
230A	NAS1149C0832R		. . . WASHER used on 010A, 010B, 010C, 010D, 010E, 010F, 010G, 010H, 010J		002
240A	NAS1096-3-8		. . . SCREW BUY PN NAS1801-3-8 used on 010A, 010B, 010C, 010D, 010E, 010F, 010G, 010H, 010J		002
250A	NAS1149C0363R		. . . WASHER used on 010A, 010B, 010C, 010D, 010E, 010F, 010G, 010H, 010J		002
260A	MS21042-3		. . . NUT used on 010A, 010B, 010C, 010D, 010E, 010F, 010G, 010H, 010J		002
270A	A325400410-500		. . . DISPENSER ASSY-SOAP used on 010A		002
-270B	A325400410-504		. . . DISPENSER ASSY-SOAP used on 010B		002
-270C	A325400410-512		. . . DISPENSER ASSY-SOAP used on 010H		002
280A	5L0061000100000		. . . CHUTE used on 010A, 010B, 010H		002
290A	A3-254-0012-202		. . BOX ASSY-SERVICE used on 001A, 001D		001

- ITEM NOT ILLUSTRATED

FIG. ITEM	PART NUMBER	AIRLINE STOCK NUMBER	NOMENCLATURE 1234567	EFF CODE	UNITS PER ASSY
-290B	A3-254-0012-204		. . BOX ASSY-SERVICE used on 001B		001
-290C	A3-254-0012-232		. . BOX ASSY-SERVICE used on 001E, 001J, 001L, 001Q		001
-290D	A3-254-0012-230		. . BOX ASSY-SERVICE used on 001F, 001P		001
-290E	A3-254-0012-222		. . BOX ASSY-SERVICE used on 001G, 001N, 001R		001
-290F	A3-254-0012-236		. . BOX ASSY-SERVICE used on 001H, 001K		001
-290G	A3-254-0012-238		. . BOX ASSY-SERVICE used on 001M		001
-300A	Y4727DA2-8		. . . DRAWER used on 290A		001
-300B	Y4727DA3-9		. . . DRAWER used on 290B		001
-300C	Y4727DA2-49		. . . DRAWER used on 290C		001
-300D	Y4727DA12-2A		. . . DRAWER used on 290D		001
-300E	Y4727DA12-2		. . . DRAWER used on 290E		001
-300F	Y4727DA12-5		. . . DRAWER used on 290F		001
-300G	Y4727DA2-68		. . . DRAWER used on 290G		001

- ITEM NOT ILLUSTRATED

FIG. ITEM	PART NUMBER	AIRLINE STOCK NUMBER	NOMENCLATURE 1234567	EFF CODE	UNITS PER ASSY
-310A	Y1335		. . . GUIDE-DRAWER used on 290A, 290B, 290C, 290D, 290E, 290F, 290G		002
-320A	Y1336		. . . HOLDER-HANDLE used on 290A, 290B, 290C, 290D, 290E, 290F, 290G		002
-330A	Y1853		. . . SCREW used on 290A, 290B, 290C, 290D, 290E, 290F, 290G		002
-340A	Y1827		. . . HANDLE used on 290A, 290B, 290C, 290D, 290E, 290F, 290G		001
-350A	DIN965M4X16		. . . SCREW used on 290A, 290B, 290C, 290D, 290E, 290F, 290G		004
360A	A3-929-0009-001		. . PSU-PASSENGER SERVICE UNIT used on 001A, 001B, 001K, 001L SEE SIL 23-016 FOR DET		001
-360B	A3-929-0009-002		. . PSU-PASSENGER SERVICE UNIT used on 001C, 001D, 001E SEE SIL 23-016 FOR DET		001
-360C	A3-929-0009-003		. . PSU-PASSENGER SERVICE UNIT used on 001F, 001G, 001H, 001J, 001M, 001N, 001P, 001Q, 001R SEE SIL 23-016 FOR DET		001
370A	F1000404-01		. . . FRAME ASSY-FRONT used on 360A		001
-370B	F1000404-02		. . . FRAME ASSY-FRONT used on 360B		001

- ITEM NOT ILLUSTRATED

FIG. ITEM	PART NUMBER	AIRLINE STOCK NUMBER	NOMENCLATURE 1234567	EFF CODE	UNITS PER ASSY
-370C	F1000404-03		. . . FRAME ASSY-FRONT used on 360C		001
380A	F1000403-01		. . . . FOIL used on 370A		001
-380B	F1000403-02		. . . . FOIL used on 370B		001
-380C	F1000403-03		. . . . FOIL used on 370C		001
390A	F1000407-00		. . . . FRAME used on 370A, 370B, 370C		001
410A	F1000408-01		. . . SCREW SET used on 360A, 360B, 360C		001
420A	F1001019-10		. . . HOUSING-SIGN used on 360A, 360B, 360C		001
430A	F1000440-00		. . . OUTLET-SHAVER used on 360A, 360B, 360C		001
440A	F1000408-00		. . . SCREW SET used on 360A, 360B, 360C		001
450A	F1000457-00		. . . HARNESS-WIRE,CALL SWITCH used on 360A, 360B, 360C		001
460A	F1000449-00		. . . BRACKET used on 360A, 360B, 360C		001
-470A	A825400501-214		. . LABEL POST VSB A2-254-25-037 POST VSB A2-254-25-039 used on 001N, 001P		001

- ITEM NOT ILLUSTRATED

FIG. ITEM	PART NUMBER	AIRLINE STOCK NUMBER	NOMENCLATURE 1234567	EFF CODE	UNITS PER ASSY
-470B	D2527811620600		. . LABEL POST VSB A2-254-25-044 used on 001Q		001
-470C	D2527811621600		. . LABEL POST VSB A2-254-25-054 used on 001R		001
-470D	D2527811623800		. . LABEL POST VSB A2-254-25-078 used on 001A		001
-470E	D2527811624800		. . LABEL POST VSB A2-254-25-070 used on 001F		001
-470F	D2527811627200		. . LABEL POST VSB A2-254-25-100 used on 001G		001
-480A	A825400501-212		. . FILM-PROTECTIVE POST VSB A2-254-25-037 POST VSB A2-254-25-039 used on 001N, 001P		001

- ITEM NOT ILLUSTRATED

THIS PAGE IS INTENTIONALLY LEFT BLANK

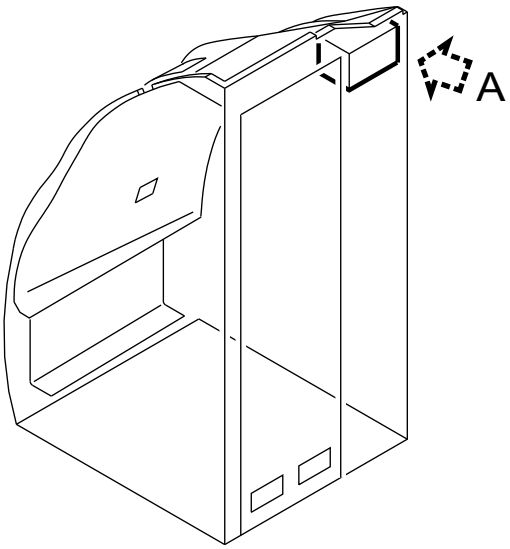

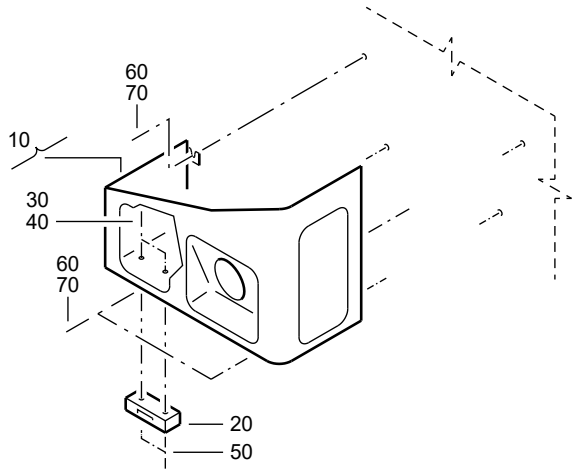

F_PL_254151_19_G_01_00

CABINET-SERVICE
Figure 19G/EN254151SHEET19G01

FIG. ITEM	PART NUMBER	AIRLINE STOCK NUMBER	NOMENCLATURE 1234567	EFF CODE	UNITS PER ASSY
19G					
-001A	D2549020712078		. CABINET-SERVICE NP used on 100A (25415141E) SEE 25-41-51-41E FOR NHA		RF
010A	A225401413-520		. . CABINET ASSY-SERVICE, UPR PART used on 001A		001
020A	A325400411-202		. . . BLOCK used on 010A		001
030A	NAS1149CN832R		. . . WASHER used on 010A		002
040A	NAS514P832-16		. . . SCREW used on 010A		002
050A	MS21042-08		. . . NUT used on 010A		002
060A	NAS1096-2-7		. . SCREW BUY PN NAS1801-08-7 used on 001A		006
070A	NAS1149CN832R		. . WASHER used on 001A		006

- ITEM NOT ILLUSTRATED

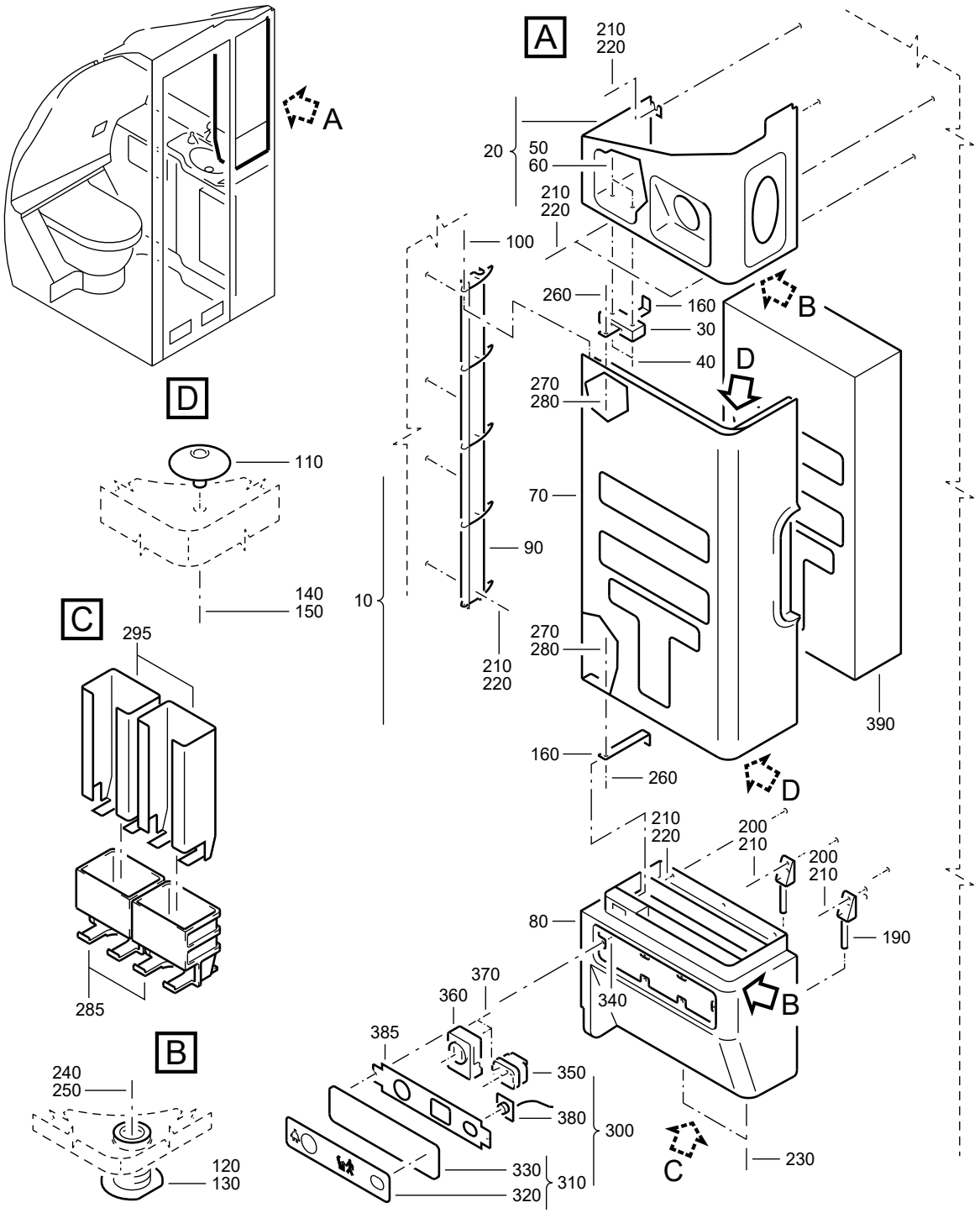

F_PL_254151_19_H_01_00

CABINET-SERVICE
Figure 19H/EN254151SHEET19H01

FIG. ITEM	PART NUMBER	AIRLINE STOCK NUMBER	NOMENCLATURE 1234567		EFF CODE	UNITS PER ASSY
19H						
-001A	D2549020812878		. CABINET-SERVICE used on 150B (25415142B) SEE 25-41-51-42B FOR NHA	NP		RF
-001B	D2549020400078		. CABINET-SERVICE used on 150D (25415142D), 150E (25415142F), 150D (25415142Q), 150C (25415142U) SEE 25-41-51-42D FOR NHA SEE 25-41-51-42F FOR NHA SEE 25-41-51-42Q FOR NHA SEE 25-41-51-42U FOR NHA	NP		RF
-001C	D2549030410278		. CABINET-SERVICE PRE VSB A2-254-25-072 used on 150D (25415142F) SEE 25-41-51-42F FOR NHA	NP		RF
-001D	D2549030409678		. CABINET-SERVICE PRE VSB A2-254-25-052 used on 150B (25415142G), 150C (25415142N), 150D (25415142S) SEE 25-41-51-42G FOR NHA SEE 25-41-51-42N FOR NHA SEE 25-41-51-42S FOR NHA	NP		RF
-001E	D2549030700678		. CABINET-SERVICE used on 150B (25415142Q) SEE 25-41-51-42Q FOR NHA	NP		RF
-001F	D2549020411278		. CABINET-SERVICE used on 150E (25415142Q) SEE 25-41-51-42Q FOR NHA	NP		RF
-001G	D2549030702078		. CABINET-SERVICE used on 150E (25415142R) SEE 25-41-51-42R FOR NHA	NP		RF

- ITEM NOT ILLUSTRATED

FIG. ITEM	PART NUMBER	AIRLINE STOCK NUMBER	NOMENCLATURE 1234567	EFF CODE	UNITS PER ASSY
-001H	R22540167500078		. CABINET-SERVICE NP POST VSB A2-254-25-072 used on 150F (25415142F) SEE 25-41-51-42F FOR NHA		RF
-001J	R22540167100078		. CABINET-SERVICE NP POST VSB A2-254-25-052 used on 150J (25415142N), 150H (25415142S) SEE 25-41-51-42N FOR NHA SEE 25-41-51-42S FOR NHA		RF
010A	A225401412-802		. . CABINET ASSY-SERVICE used on 001A		001
-010B	A225401412-750		. . CABINET ASSY-SERVICE used on 001B		001
-010C	A225401412-712		. . CABINET ASSY-SERVICE used on 001C, 001H		001
-010D	A225401412-718		. . CABINET ASSY-SERVICE used on 001D, 001J		001
-010E	A225401412-758		. . CABINET ASSY-SERVICE used on 001E		001
-010F	A225401412-720		. . CABINET ASSY-SERVICE used on 001F		001
-010G	A225401412-722		. . CABINET ASSY-SERVICE used on 001G		001
020A	A225401413-522		. . . CABINET ASSY-SERVICE, UPR PART BUY PN A225401492-500 used on 010A, 010B		001
-020B	A225401413-538		. . . CABINET ASSY-SERVICE, UPR PART used on 010C, 010D, 010E		001

- ITEM NOT ILLUSTRATED

FIG. ITEM	PART NUMBER	AIRLINE STOCK NUMBER	NOMENCLATURE 1234567	EFF CODE	UNITS PER ASSY
-020C	A225401413-544		. . . CABINET ASSY-SERVICE, UPR PART used on 010F		001
-020D	A225401413-546		. . . CABINET ASSY-SERVICE, UPR PART used on 010G		001
030A	A325400411-202		. . . . BLOCK used on 020A, 020B, 020C, 020D		001
040A	NAS514P832-16		. . . . SCREW used on 020A, 020B, 020C, 020D		002
050A	MS21042-08		. . . . NUT used on 020A, 020B, 020C, 020D		002
060A	NAS1149CN832R		. . . . WASHER used on 020A, 020B, 020C, 020D		002
070A	A225400414-558		. . . CABINET-SERVICE,CTR PART used on 010A		001
-070B	A225400414-700		. . . CABINET-SERVICE,CTR PART used on 010B		001
-070C	A225400414-726		. . . CABINET-SERVICE,CTR PART used on 010C		001
-070D	A225400414-740		. . . CABINET-SERVICE,CTR PART used on 010D		001
-070E	A225400414-732		. . . CABINET-SERVICE,CTR PART used on 010E		001

- ITEM NOT ILLUSTRATED

FIG. ITEM	PART NUMBER	AIRLINE STOCK NUMBER	NOMENCLATURE 1234567	EFF CODE	UNITS PER ASSY
-070F	A225400414-742		. . . CABINET-SERVICE,CTR PART used on 010F		001
-070G	A225400414-744		. . . CABINET-SERVICE,CTR PART used on 010G		001
080A	A225400415-802		. . . CABINET-SERVICE,LWR PART used on 010A		001
-080B	A225400415-850		. . . CABINET-SERVICE,LWR PART used on 010B		001
-080C	A225400415-824		. . . CABINET-SERVICE,LWR PART used on 010C, 010D		001
-080D	A225400415-868		. . . CABINET-SERVICE,LWR PART used on 010E		001
-080E	A225400415-836		. . . CABINET-SERVICE,LWR PART used on 010F		001
-080F	A225400415-838		. . . CABINET-SERVICE,LWR PART used on 010G		001
090A	A325400416-200		. . . HINGE used on 010A, 010B, 010C, 010D, 010E, 010F, 010G		001
100A	5L0034600106000		. . . PIN-HINGE used on 010A, 010B, 010C, 010D, 010E, 010F, 010G		001

- ITEM NOT ILLUSTRATED

FIG. ITEM	PART NUMBER	AIRLINE STOCK NUMBER	NOMENCLATURE 1234567	EFF CODE	UNITS PER ASSY
110A	A225400414-200		. . . BUSHING used on 010A, 010B, 010C, 010D, 010E, 010F, 010G		002
120A	A225400414-202		. . . BUSHING used on 010A, 010B, 010C, 010D, 010E, 010F, 010G		002
130A	1608011		. . . LATCH-SPRING-LOADED used on 010A, 010B, 010C, 010D, 010E, 010F, 010G		002
140A	NAS1100-04-3		. . . SCREW used on 010A, 010B, 010C, 010D, 010E, 010F, 010G		002
150A	NAS1149CN832R		. . . WASHER used on 010A, 010B, 010C, 010D, 010E, 010F, 010G		002
160A	A325400411-000		. . . ANGLE ASSY used on 010A, 010B, 010C, 010D, 010E, 010F, 010G		002
-170A	A325400411-200		. . . . ANGLE used on 160A		001
-180A	66333493		. . . . BUMPER BUY PN SJ5302TRANSPAR used on 160A		001
190A	5L0034600111000		. . . BRACKET-ANGLE used on 010A, 010B, 010C, 010D, 010E, 010F, 010G		002
200A	NAS1096-2-5		. . . SCREW BUY PN NAS1801-08-5 used on 010A, 010B, 010C, 010D, 010E, 010F, 010G		004

- ITEM NOT ILLUSTRATED

FIG. ITEM	PART NUMBER	AIRLINE STOCK NUMBER	NOMENCLATURE 1234567	EFF CODE	UNITS PER ASSY
210A	NAS1149CN832R		. . . WASHER used on 010A, 010B, 010C, 010D, 010E, 010F, 010G		019
220A	NAS1096-2-7		. . . SCREW BUY PN NAS1801-08-7 used on 010A, 010B, 010C, 010D, 010E, 010F, 010G		011
230A	NAS1102-08-7		. . . SCREW used on 010A, 010B, 010C, 010D, 010E, 010F, 010G		002
240A	NAS1022N8		. . . NUT used on 010A, 010B, 010C, 010D, 010E, 010F, 010G		002
250A	NAS1149C0832R		. . . WASHER used on 010A, 010B, 010C, 010D, 010E, 010F, 010G		002
260A	NAS1096-3-8		. . . SCREW BUY PN NAS1801-3-8 used on 010A, 010B, 010C, 010D, 010E, 010F, 010G		002
270A	NAS1149C0363R		. . . WASHER used on 010A, 010B, 010C, 010D, 010E, 010F, 010G		002
280A	MS21042-3		. . . NUT used on 010A, 010B, 010C, 010D, 010E, 010F, 010G		002
285A	A325400410-500		. . . DISPENSER ASSY-SOAP used on 010B		002
-285B	A325400410-512		. . . DISPENSER ASSY-SOAP used on 010E		002

- ITEM NOT ILLUSTRATED

FIG. ITEM	PART NUMBER	AIRLINE STOCK NUMBER	NOMENCLATURE 1234567	EFF CODE	UNITS PER ASSY
295A	5L0061000100000		. . . CHUTE used on 010B, 010E		002
300A	A3-929-0009-002		. . PSU-PASSENGER SERVICE UNIT used on 001A		001
-300B	A3-929-0009-001		. . PSU-PASSENGER SERVICE UNIT used on 001B, 001C, 001H		001
-300C	A3-929-0009-003		. . PSU-PASSENGER SERVICE UNIT used on 001D, 001E, 001F, 001G, 001J		001
310A	F1000404-02		. . . FRAME ASSY-FRONT used on 300A		001
-310B	F1000404-01		. . . FRAME ASSY-FRONT used on 300B		001
-310C	F1000404-03		. . . FRAME ASSY-FRONT used on 300C		001
320A	F1000403-02		. . . . FOIL used on 310A		001
-320B	F1000403-01		. . . . FOIL used on 310B		001
-320C	F1000403-03		. . . . FOIL used on 310C		001
330A	F1000407-00		. . . . FRAME used on 310A, 310B, 310C		001
340A	F1000408-01		. . . SCREW SET used on 300A, 300B, 300C		001

- ITEM NOT ILLUSTRATED

FIG. ITEM	PART NUMBER	AIRLINE STOCK NUMBER	NOMENCLATURE 1234567	EFF CODE	UNITS PER ASSY
350A	F1001019-10		. . . HOUSING-SIGN used on 300A, 300B, 300C		001
360A	F1000440-00		. . . OUTLET-SHAVER used on 300A, 300B, 300C		001
370A	F1000408-00		. . . SCREW SET used on 300A, 300B, 300C		001
380A	F1000457-00		. . . HARNESS-WIRE,CALL SWITCH used on 300A, 300B, 300C		001
385A	F1000449-00		. . . BRACKET used on 300A, 300B, 300C		001
390A	A3-254-0012-202		. . BOX ASSY-SERVICE used on 001B		001
-390B	A3-254-0012-232		. . BOX ASSY-SERVICE used on 001C, 001E, 001H		001
-390C	A3-254-0012-240		. . BOX ASSY-SERVICE used on 001D, 001J		001
-390D	A3-254-0012-242		. . BOX ASSY-SERVICE used on 001F		001
-390E	A3-254-0012-244		. . BOX ASSY-SERVICE used on 001G		001
-400A	Y4727DA2-8		. . . DRAWER used on 390A		001
-400B	Y4727DA2-49		. . . DRAWER used on 390B		001
-400C	Y4727DA7-25		. . . DRAWER used on 390C		001

- ITEM NOT ILLUSTRATED

FIG. ITEM	PART NUMBER	AIRLINE STOCK NUMBER	NOMENCLATURE 1234567	EFF CODE	UNITS PER ASSY
-400D	Y4727DA12-7		. . . DRAWER used on 390D		001
-400E	Y4727DA12-16		. . . DRAWER used on 390E		001
-410A	Y1335		. . . GUIDE-DRAWER used on 390A, 390B, 390C, 390D, 390E		002
-420A	Y1336		. . . HOLDER-HANDLE used on 390A, 390B, 390C, 390D, 390E		002
-430A	Y1853		. . . SCREW used on 390A, 390B, 390C, 390D, 390E		002
-440A	Y1827		. . . HANDLE used on 390A, 390B, 390C, 390D, 390E		001
-450A	DIN965M4X16		. . . SCREW used on 390A, 390B, 390C, 390D, 390E		004
-460A	A825400501-214		. . LABEL POST VSB A2-254-25-072 used on 001H		001
-460B	D2527811620000		. . LABEL POST VSB A2-254-25-052 used on 001J		001
-470A	A825400501-212		. . FILM, PROTECTIVE POST VSB A2-254-25-072 used on 001H		001

- ITEM NOT ILLUSTRATED

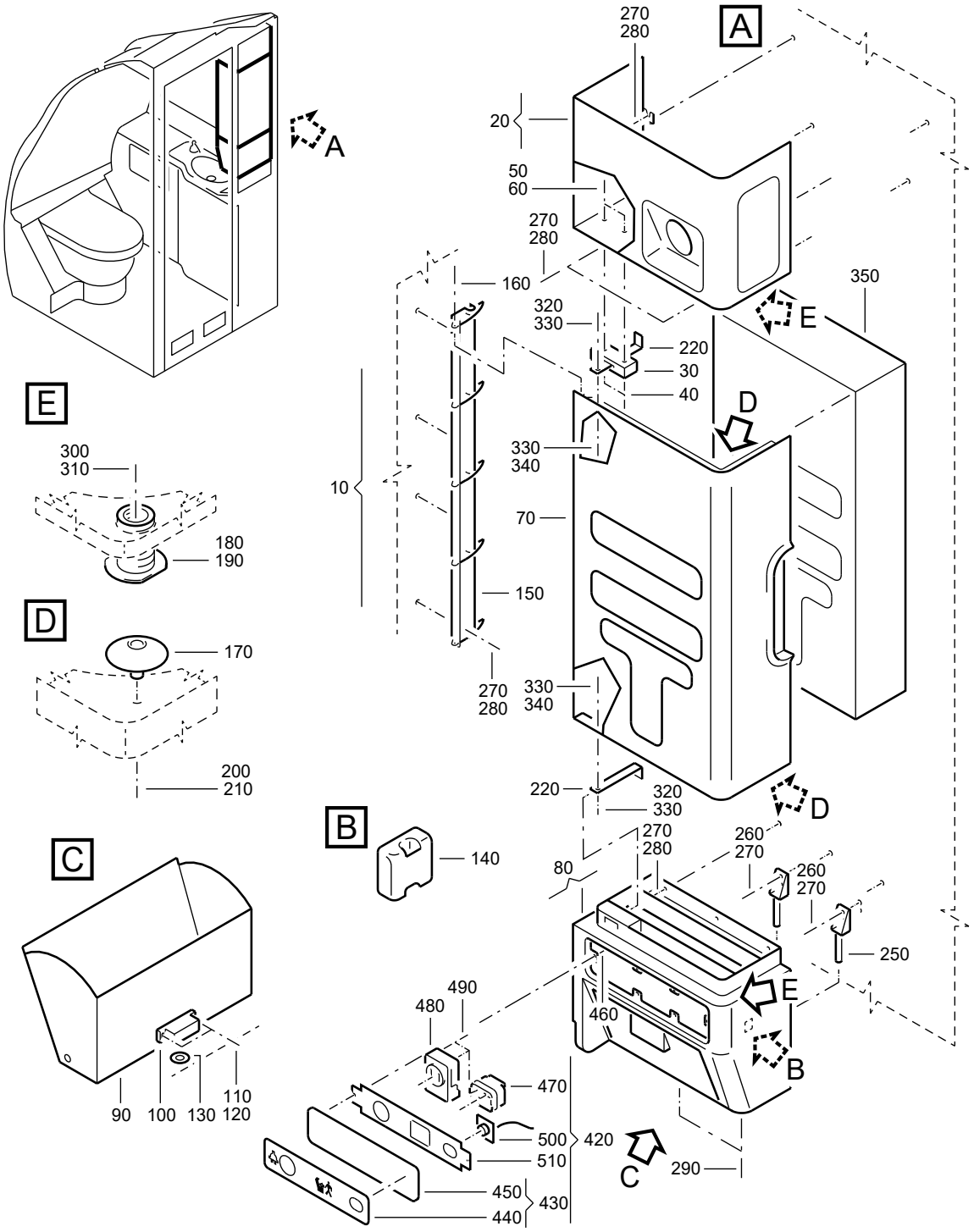

F_PL_254151_19_J_01_00

CABINET-SERVICE
Figure 19J/EN254151SHEET19J01

FIG. ITEM	PART NUMBER	AIRLINE STOCK NUMBER	NOMENCLATURE 1234567	EFF CODE	UNITS PER ASSY
19J					
-001A	D2549020407478		. CABINET-SERVICE NP used on 150C (25415142H), 150F (25415142L), 150D (25415142N), 150E (25415142T) SEE 25-41-51-42H FOR NHA SEE 25-41-51-42L FOR NHA SEE 25-41-51-42N FOR NHA SEE 25-41-51-42T FOR NHA		RF
010A	A225401412-850		. . CABINET ASSY-SERVICE used on 001A		001
020A	A225401413-522		. . . CABINET ASSY-SERVICE, UPR PART BUY PN A225401492-500 used on 010A		001
030A	A325400411-202		. . . . BLOCK used on 020A		001
040A	NAS514P832-16		. . . . SCREW used on 020A		002
050A	MS21042-08		. . . . NUT used on 020A		002
060A	NAS1149CN832R		. . . . WASHER used on 020A		002
070A	A225400414-700		. . . CABINET-SERVICE,CTR PART used on 010A		001
080A	A225400415-710		. . . CABINET-SERVICE,LWR PART used on 010A		001
090A	A325400419-500		. . . . FLAP-SERVICE CABINET used on 080A		001

- ITEM NOT ILLUSTRATED

FIG. ITEM	PART NUMBER	AIRLINE STOCK NUMBER	NOMENCLATURE 1234567	EFF CODE	UNITS PER ASSY
100A	246-29-703		. . . . CATCH-MAGNETIC used on 080A		001
110A	NAS1102-06-8		. . . . SCREW used on 080A		002
120A	MS21042-06		. . . . NUT used on 080A		002
130A	ASNA0113-48ADL		. . . . WASHER used on 080A		001
140A	NSA935405-01		. . . . MOUNT used on 080A		001
150A	A325400416-200		. . . HINGE used on 010A		001
160A	5L0034600106000		. . . PIN-HINGE used on 010A		001
170A	A225400414-200		. . . BUSHING used on 010A		002
180A	A225400414-202		. . . BUSHING used on 010A		002
190A	1608011		. . . LATCH-SPRING-LOADED used on 010A		002
200A	NAS1100-04-3		. . . SCREW used on 010A		002
210A	NAS1149CN832R		. . . WASHER used on 010A		002
220A	A325400411-000		. . . ANGLE ASSY used on 010A		002
-230A	A325400411-200		. . . . ANGLE used on 220A		001

- ITEM NOT ILLUSTRATED

FIG. ITEM	PART NUMBER	AIRLINE STOCK NUMBER	NOMENCLATURE 1234567	EFF CODE	UNITS PER ASSY
-240A	66333493		. . . . BUMPER BUY PN SJ5302TRANSPAR used on 220A		001
250A	5L0034600111000		. . . BRACKET-ANGLE used on 010A		002
260A	NAS1096-2-5		. . . SCREW BUY PN NAS1801-08-5 used on 010A		004
270A	NAS1149CN832R		. . . WASHER used on 010A		019
280A	NAS1096-2-7		. . . SCREW BUY PN NAS1801-08-7 used on 010A		011
290A	NAS1102-08-7		. . . SCREW used on 010A		002
300A	NAS1022N8		. . . NUT used on 010A		002
310A	NAS1149C0832R		. . . WASHER used on 010A		002
320A	NAS1096-3-8		. . . SCREW BUY PN NAS1801-3-8 used on 010A		002
330A	NAS1149C0363R		. . . WASHER used on 010A		004
340A	MS21042-3		. . . NUT used on 010A		002
350A	A3-254-0012-202		. . BOX ASSY-SERVICE used on 001A		001
-360A	Y4727DA2-8		. . . DRAWER used on 350A		001

- ITEM NOT ILLUSTRATED

FIG. ITEM	PART NUMBER	AIRLINE STOCK NUMBER	NOMENCLATURE 1234567	EFF CODE	UNITS PER ASSY
-370A	Y1335		. . . GUIDE-DRAWER used on 350A		002
-380A	Y1336		. . . HOLDER-HANDLE used on 350A		002
-390A	Y1853		. . . SCREW used on 350A		002
-400A	Y1827		. . . HANDLE used on 350A		001
-410A	DIN965M4X16		. . . SCREW used on 350A		004
420A	A3-929-0009-003		. . PSU-PASSENGER SERVICE UNIT used on 001A		001
430A	F1000404-03		. . . FRAME ASSY-FRONT used on 420A		001
440A	F1000403-03		. . . . FOIL used on 430A		001
450A	F1000407-00		. . . . FRAME used on 430A		001
460A	F1000408-01		. . . SCREW SET used on 420A		001
470A	F1001019-10		. . . HOUSING-SIGN used on 420A		001
480A	F1000440-00		. . . OUTLET-SHAVER used on 420A		001
490A	F1000408-00		. . . SCREW SET used on 420A		001

- ITEM NOT ILLUSTRATED

FIG. ITEM	PART NUMBER	AIRLINE STOCK NUMBER	NOMENCLATURE 1234567	EFF CODE	UNITS PER ASSY
500A	F1000457-00		. . . HARNESS-WIRE,CALL SWITCH used on 420A		001
510A	F1000449-00		. . . BRACKET used on 420A		001

- ITEM NOT ILLUSTRATED

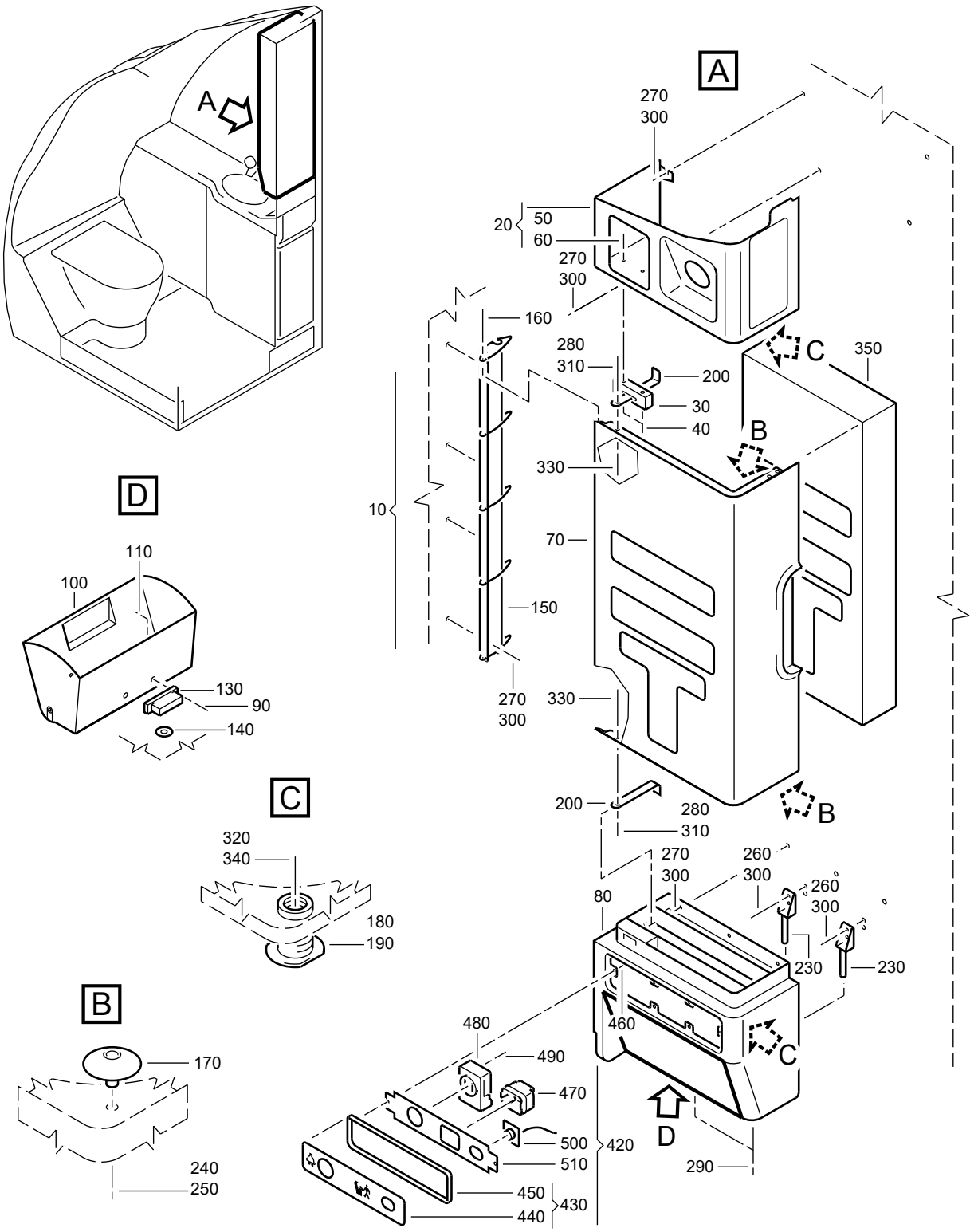

F_PL_254151_19_K_01_00

CABINET-SERVICE
Figure 19K/EN254151SHEET19K01

FIG. ITEM	PART NUMBER	AIRLINE STOCK NUMBER	NOMENCLATURE 1234567	EFF CODE	UNITS PER ASSY
19K					
-001A	D2547161202878		. CABINET-SERVICE NP POST SB 25-1674 used on 150G (25415141M), 150G (25415142N) SEE 25-41-51-41M FOR NHA SEE 25-41-51-42N FOR NHA		RF
010A	A225401491-600		. . CABINET ASSY-SERVICE POST SB 25-1674 used on 001A		001
020A	A225401492-502		. . . CABINET ASSY-SERVICE, UPR PART used on 010A		001
030A	A325400411-202		. . . . BLOCK used on 020A		001
040A	NAS514P832-16		. . . . SCREW used on 020A		002
050A	NAS1149CN832R		. . . . WASHER used on 020A		002
060A	MS21042-08		. . . . NUT used on 020A		002
070A	A225400493-502		. . . CABINET-SERVICE,CTR PART used on 010A		001
080A	A225400494-600		. . . CABINET-SERVICE,LWR PART used on 010A		001
090A	NAS1102-06-8		. . . . SCREW used on 080A		002
100A	A325400419-504		. . . . FLAP-SERVICE CABINET used on 080A		001

- ITEM NOT ILLUSTRATED

FIG. ITEM	PART NUMBER	AIRLINE STOCK NUMBER	NOMENCLATURE 1234567	EFF CODE	UNITS PER ASSY
110A	MS21042-06		. . . . NUT used on 080A		002
-120A	NSA935405-01		. . . . MOUNT used on 080A		001
130A	246-29-703		. . . . CATCH-MAGNETIC used on 080A		001
140A	ASNA0113-48ADL		. . . . WASHER used on 080A		001
150A	A325400416-516		. . . HINGE used on 010A		001
160A	5L0034600106000		. . . PIN-HINGE used on 010A		001
170A	A225400414-200		. . . BUSHING used on 010A		002
180A	A225400414-202		. . . BUSHING used on 010A		002
190A	1608011		. . . LATCH-SPRING-LOADED used on 010A		002
200A	A325400411-000		. . . ANGLE ASSY used on 010A		002
-210A	A325400411-200		. . . . ANGLE used on 200A		001
-220A	66333493		. . . . BUMPER BUY PN SJ5302TRANSPAR used on 200A		001
230A	5L0034600111000		. . . BRACKET-ANGLE used on 010A		002
240A	NAS1100-04-3		. . . SCREW used on 010A		002

- ITEM NOT ILLUSTRATED

FIG. ITEM	PART NUMBER	AIRLINE STOCK NUMBER	NOMENCLATURE 1234567	EFF CODE	UNITS PER ASSY
250A	NAS1149CN832R		. . . WASHER used on 010A		002
260A	NAS1801-08-5		. . . SCREW used on 010A		004
270A	NAS1801-08-7		. . . SCREW used on 010A		011
280A	NAS1801-3-8		. . . SCREW used on 010A		002
290A	NAS1102-08-7		. . . SCREW used on 010A		002
300A	NAS1149CN832R		. . . WASHER used on 010A		015
310A	NAS1149C0363R		. . . WASHER used on 010A		002
320A	NAS1149C0832R		. . . WASHER used on 010A		002
330A	MS21042-3		. . . NUT used on 010A		002
340A	MS21083N8		. . . NUT used on 010A		002
350A	A3-254-0012-332		. . BOX ASSY-SERVICE POST SB 25-1674 used on 001A		001
-360A	Y4727DA2-49		. . . DRAWER used on 350A		001
-370A	Y1335		. . . GUIDE-DRAWER used on 350A		002
-380A	Y1336		. . . HOLDER-HANDLE used on 350A		002

- ITEM NOT ILLUSTRATED

FIG. ITEM	PART NUMBER	AIRLINE STOCK NUMBER	NOMENCLATURE 1234567	EFF CODE	UNITS PER ASSY
-390A	Y1853		. . . SCREW used on 350A		002
-400A	Y1827		. . . HANDLE used on 350A		001
-410A	DIN965M4X16		. . . SCREW used on 350A		004
420A	A3-929-0009-003		. . PSU-PASSENGER SERVICE UNIT used on 001A		001
430A	F1000404-03		. . . FRAME ASSY-FRONT used on 420A		001
440A	F1000403-03		. . . . FOIL used on 430A		001
450A	F1000407-00		. . . . FRAME used on 430A		001
460A	F1000408-01		. . . SCREW SET used on 420A		001
470A	F1001019-10		. . . HOUSING-SIGN used on 420A		001
480A	F1000440-00		. . . OUTLET-SHAVER used on 420A		001
490A	F1000408-00		. . . SCREW SET used on 420A		001
500A	F1000457-00		. . . HARNESS-WIRE,CALL SWITCH used on 420A		001
510A	F1000449-00		. . . BRACKET used on 420A		001

- ITEM NOT ILLUSTRATED

THIS PAGE IS INTENTIONALLY LEFT BLANK

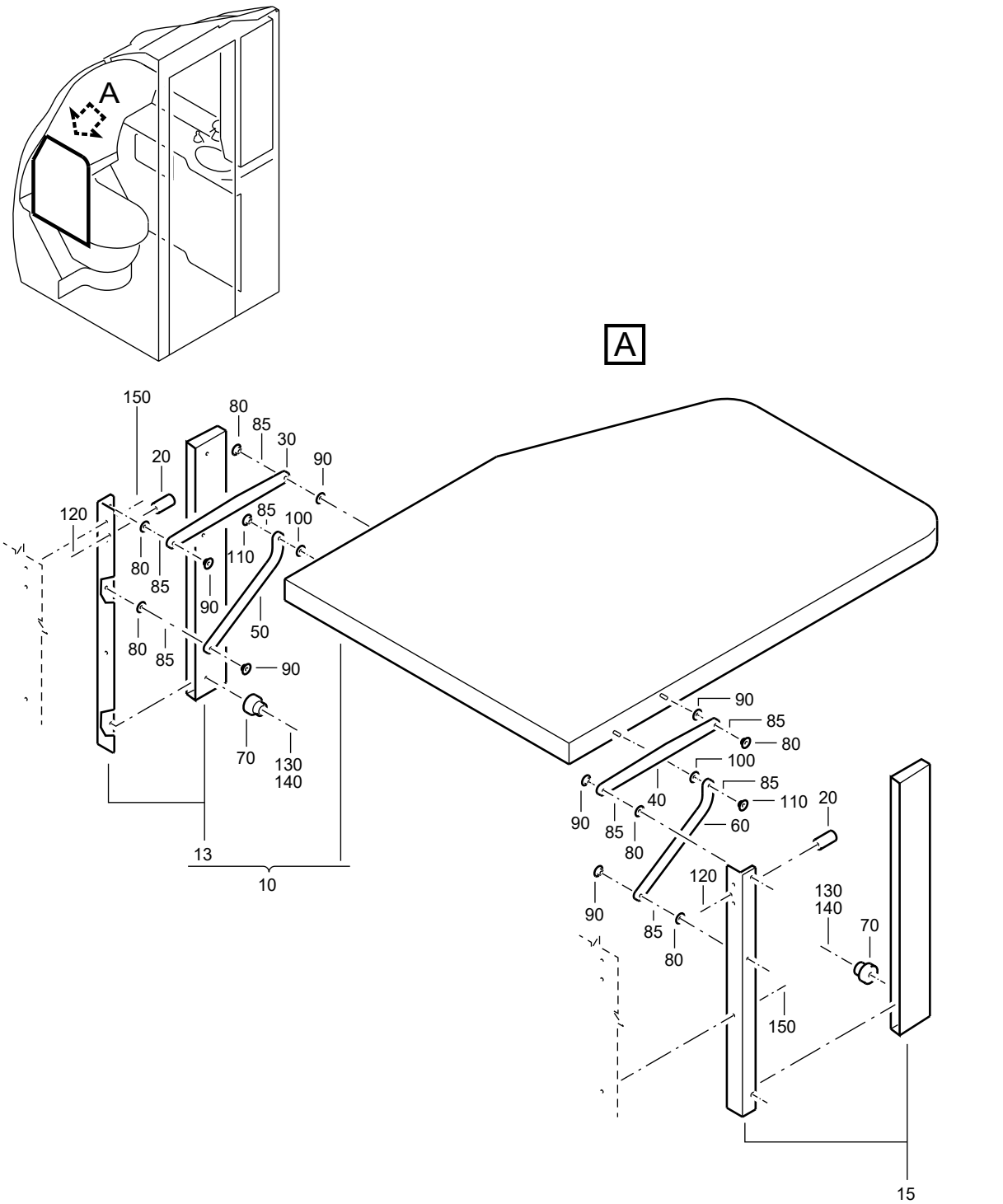

F_PL_254151_20_0_01_00

TABLE-NURSING
Figure 20/EN254151SHEET20001

FIG. ITEM	PART NUMBER	AIRLINE STOCK NUMBER	NOMENCLATURE 1234567	EFF CODE	UNITS PER ASSY
20					
-001A	D2549010500079		. TABLE-NURSING NP used on 160A (254151010), 160B (25415101A), 160B(25415101B), 160B (25415101C), 160A (25415101E), 160B(25415101K) SEE 25-41-51-010 FOR NHA SEE 25-41-51-01A FOR NHA SEE 25-41-51-01B FOR NHA SEE 25-41-51-01C FOR NHA SEE 25-41-51-01E FOR NHA SEE 25-41-51-01K FOR NHA		RF
-001B	D2549020500079		. TABLE-NURSING NP used on 160B (254151010), 160C (25415101A), 160C(25415101B), 160B (25415101D), 160C (25415101E), 160B(25415101F), 160B (25415101J), 160A (25415101P) SEE 25-41-51-010 FOR NHA SEE 25-41-51-01A FOR NHA SEE 25-41-51-01B FOR NHA SEE 25-41-51-01D FOR NHA SEE 25-41-51-01E FOR NHA SEE 25-41-51-01F FOR NHA SEE 25-41-51-01J FOR NHA SEE 25-41-51-01P FOR NHA		RF

- ITEM NOT ILLUSTRATED

FIG. ITEM	PART NUMBER	AIRLINE STOCK NUMBER	NOMENCLATURE 1234567	EFF CODE	UNITS PER ASSY
-001C	D2549010500479		. TABLE-NURSING NP used on 160C (254151010), 160A (25415101A), 160A(25415101B), 160A (25415101C), 160A (25415101D), 160B(25415101E), 160A (25415101F), 160A (25415101G), 160A(25415101H), 160A (25415101J), 160C (25415101K), 160A(25415101L), 160A (25415101M), 160A (25415101N), 160B(25415101P), 160A (25415101R), 160D (25415141T) SEE 25-41-51-010 FOR NHA SEE 25-41-51-01A FOR NHA SEE 25-41-51-01B FOR NHA SEE 25-41-51-01C FOR NHA SEE 25-41-51-01D FOR NHA SEE 25-41-51-01E FOR NHA SEE 25-41-51-01F FOR NHA SEE 25-41-51-01G FOR NHA SEE 25-41-51-01H FOR NHA SEE 25-41-51-01J FOR NHA SEE 25-41-51-01K FOR NHA SEE 25-41-51-01L FOR NHA SEE 25-41-51-01M FOR NHA SEE 25-41-51-01N FOR NHA SEE 25-41-51-01P FOR NHA SEE 25-41-51-01R FOR NHA SEE 25-41-51-41T FOR NHA		RF
-001D	D2549030507279		. TABLE-NURSING NP used on 160D (25415101N) SEE 25-41-51-01N FOR NHA		RF
-001E	D2549030505679		. TABLE-NURSING NP used on 160A (25415101K), 160C (25415101P) SEE 25-41-51-01K FOR NHA SEE 25-41-51-01P FOR NHA		RF

- ITEM NOT ILLUSTRATED

FIG. ITEM	PART NUMBER	AIRLINE STOCK NUMBER	NOMENCLATURE 1234567	EFF CODE	UNITS PER ASSY
010A	A2-254-0008-002		. . TABLE ASSY-NURSING used on 001A		001
-010B	A2-254-0008-003		. . TABLE ASSY-NURSING used on 001B		001
-010C	A2-254-0008-001		. . TABLE ASSY-NURSING used on 001C		001
-010D	A2-254-0008-012		. . TABLE ASSY-NURSING used on 001D		001
-010E	A2-254-0008-005		. . TABLE ASSY-NURSING used on 001E		001
013A	A2-254-0008-502		. . . GUIDE-LATERAL used on 010A		001
-013B	A2-254-0008-504		. . . GUIDE-LATERAL used on 010B		001
-013C	A2-254-0008-500		. . . GUIDE-LATERAL used on 010C		001
-013D	A2-254-0008-522		. . . GUIDE-LATERAL used on 010D		001
-013E	A2-254-0008-508		. . . GUIDE-LATERAL used on 010E		001
015A	A2-254-0008-503		. . . GUIDE-LATERAL used on 010A		001
-015B	A2-254-0008-505		. . . GUIDE-LATERAL used on 010B		001
-015C	A2-254-0008-501		. . . GUIDE-LATERAL used on 010C		001
-015D	A2-254-0008-523		. . . GUIDE-LATERAL used on 010D		001

- ITEM NOT ILLUSTRATED

FIG. ITEM	PART NUMBER	AIRLINE STOCK NUMBER	NOMENCLATURE 1234567	EFF CODE	UNITS PER ASSY
-015E	A2-254-0008-509		. . . GUIDE-LATERAL used on 010E		001
020A	A2-254-0008-221		. . . STOP used on 010A, 010B, 010C, 010D, 010E		002
030A	A2-254-0008-208		. . . LEVER-SWIVEL used on 010A, 010B, 010C, 010D, 010E		001
040A	A2-254-0008-207		. . . LEVER-SWIVEL used on 010A, 010B, 010C, 010D, 010E		001
050A	A2-254-0008-206		. . . LEVER-SWIVEL used on 010A, 010B, 010C, 010D, 010E		001
060A	A2-254-0008-205		. . . LEVER-SWIVEL used on 010A, 010B, 010C, 010D, 010E		001
070A	A2-254-0008-220		. . . ROLLER used on 010A, 010B, 010C, 010D, 010E		002
080A	A2-254-0008-210		. . . BUSHING used on 010A, 010B, 010C, 010D, 010E		006
085A	DIN988-8X14X0-2		. . . WASHER POST SB 25-1166 used on 010A, 010B, 010C, 010D, 010E		008
090A	A2-254-0008-215		. . . WASHER used on 010A, 010B, 010C, 010D, 010E		006

- ITEM NOT ILLUSTRATED

FIG. ITEM	PART NUMBER	AIRLINE STOCK NUMBER	NOMENCLATURE 1234567	EFF CODE	UNITS PER ASSY
100A	A2-254-0008-216		. . . WASHER used on 010A, 010B, 010C, 010D, 010E		002
110A	A2-254-0008-211		. . . BUSHING used on 010A, 010B, 010C, 010D, 010E		002
120A	NAS1102E3-10		. . . SCREW used on 010A, 010B, 010C, 010D, 010E		002
130A	A2-254-0008-223		. . . SPACER used on 010A, 010B, 010C, 010D, 010E		002
140A	NAS1096-3-8		. . . SCREW BUY PN NAS1801-3-8 used on 010A, 010B, 010C, 010D, 010E		002
150A	NAS1096-3-7		. . SCREW BUY PN NAS1801-3-7 used on 001A, 001B, 001C, 001D, 001E		006

- ITEM NOT ILLUSTRATED

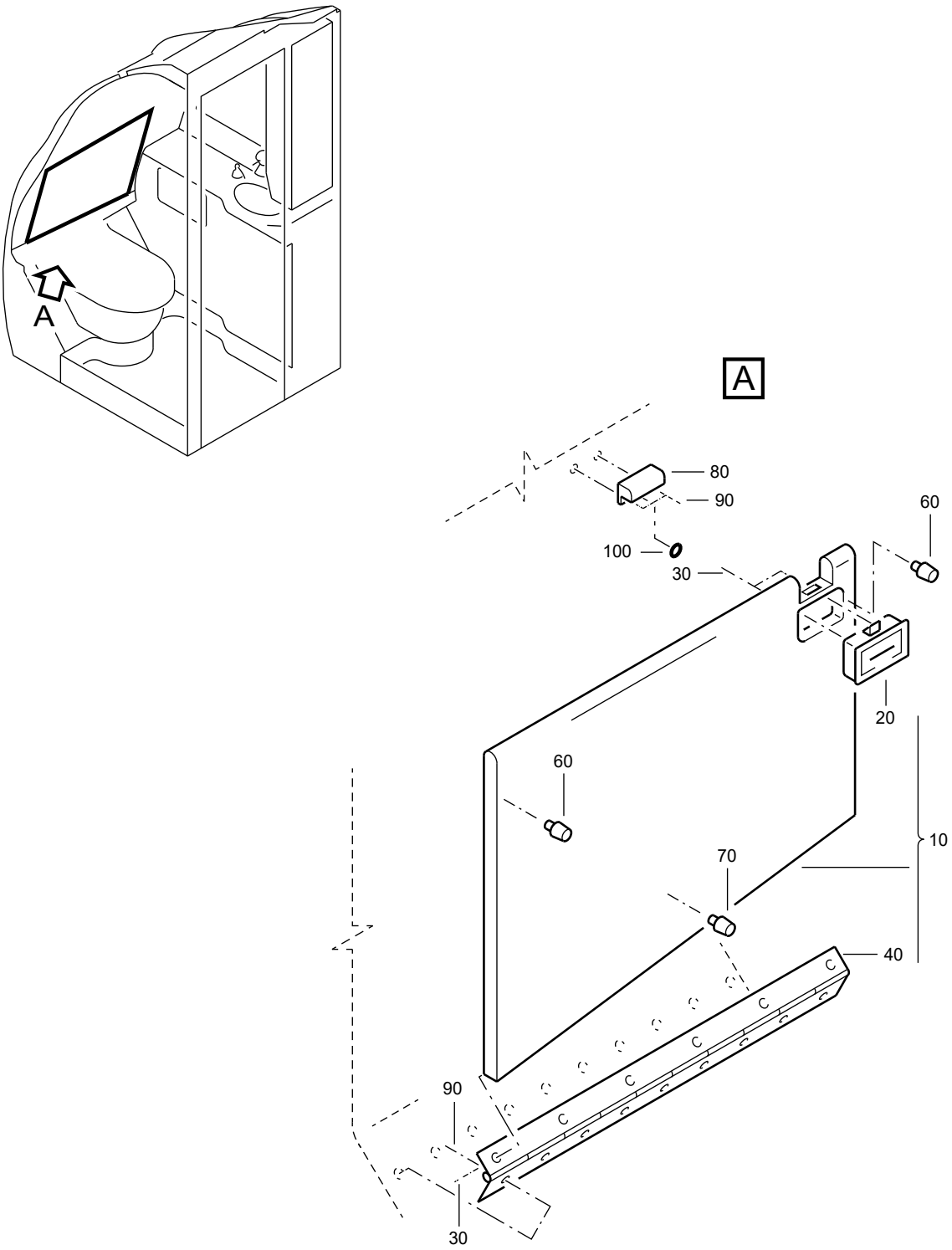

F_PL_254151_20_A_01_00

TABLE-NURSING
Figure 20A/EN254151SHEET20A01

FIG. ITEM	PART NUMBER	AIRLINE STOCK NUMBER	NOMENCLATURE 1234567	EFF CODE	UNITS PER ASSY
20A -001A	D2549010512679		. TABLE-NURSING NP PRE VSB A2-254-25-130 used on 160D (254151010), 160D (25415101A), 160D (25415101B), 160C (25415101C), 160D (25415101E), 160C(25415101F), 160C (25415101G), 160B (25415101H), 160C(25415101J), 160E (25415101K), 160B (25415101L), 160C(25415101M), 160C (25415101N), 160F (25415101P), 160C(25415101Q), 160B (25415101R), 160C (25415101S), 160A(25415101T), 160B (25415101U), 160A (25415101V), 160A (25415101W), 160A (25415101X), 160A (25415101Y), 160B(25415101Z), 160B (254151410), 160A (25415141A), 160B(25415141B), 160A (25415141C), 160E (25415141D), 160D(25415141F), 160D (25415141G), 160A (25415141H), 160F(25415141J), 160B (25415141K), 160B (25415141L), 160B(25415141M), 160D (25415141N), 160B (25415141P), 160C(25415141R), 160A (25415141S), 160C (25415141T), 160B(25415141U), 160B (25415141V), 160E (25415141W), 160A (25415141X), 160A (25415141Y), 160B (25415141Z), 160C (254151420), 160B (25415142A), 160B (25415142C), 160D		RF

- ITEM NOT ILLUSTRATED

FIG. ITEM	PART NUMBER	AIRLINE STOCK NUMBER	NOMENCLATURE 1234567	EFF CODE	UNITS PER ASSY
			(25415142D), 160C (25415142E), 160B (25415142F), 160C(25415142G), 160C (25415142H), 160B (25415142J), 160A(25415142L), 160A (25415142M), 160E (25415142N), 160B(25415142P), 160B (25415142Q), 160A (25415142S), 160C(25415142T), 160B (25415142U) SEE 25-41-51-010 FOR NHA SEE 25-41-51-01A FOR NHA SEE 25-41-51-01B FOR NHA SEE 25-41-51-01C FOR NHA SEE 25-41-51-01E FOR NHA SEE 25-41-51-01F FOR NHA SEE 25-41-51-01G FOR NHA SEE 25-41-51-01H FOR NHA SEE 25-41-51-01J FOR NHA SEE 25-41-51-01K FOR NHA SEE 25-41-51-01L FOR NHA SEE 25-41-51-01M FOR NHA SEE 25-41-51-01N FOR NHA SEE 25-41-51-01P FOR NHA SEE 25-41-51-01Q FOR NHA SEE 25-41-51-01R FOR NHA SEE 25-41-51-01S FOR NHA SEE 25-41-51-01T FOR NHA SEE 25-41-51-01U FOR NHA SEE 25-41-51-01V FOR NHA SEE 25-41-51-01W FOR NHA SEE 25-41-51-01X FOR NHA SEE 25-41-51-01Y FOR NHA SEE 25-41-51-01Z FOR NHA SEE 25-41-51-410 FOR NHA SEE 25-41-51-41A FOR NHA SEE 25-41-51-41B FOR NHA SEE 25-41-51-41C FOR NHA SEE 25-41-51-41D FOR NHA SEE 25-41-51-41F FOR NHA		

- ITEM NOT ILLUSTRATED

FIG. ITEM	PART NUMBER	AIRLINE STOCK NUMBER	NOMENCLATURE 1234567	EFF CODE	UNITS PER ASSY
			SEE 25-41-51-41G FOR NHA SEE 25-41-51-41H FOR NHA SEE 25-41-51-41J FOR NHA SEE 25-41-51-41K FOR NHA SEE 25-41-51-41L FOR NHA SEE 25-41-51-41M FOR NHA SEE 25-41-51-41N FOR NHA SEE 25-41-51-41P FOR NHA SEE 25-41-51-41R FOR NHA SEE 25-41-51-41S FOR NHA SEE 25-41-51-41T FOR NHA SEE 25-41-51-41U FOR NHA SEE 25-41-51-41V FOR NHA SEE 25-41-51-41W FOR NHA SEE 25-41-51-41X FOR NHA SEE 25-41-51-41Y FOR NHA SEE 25-41-51-41Z FOR NHA SEE 25-41-51-420 FOR NHA SEE 25-41-51-42A FOR NHA SEE 25-41-51-42C FOR NHA SEE 25-41-51-42D FOR NHA SEE 25-41-51-42E FOR NHA SEE 25-41-51-42F FOR NHA SEE 25-41-51-42G FOR NHA SEE 25-41-51-42H FOR NHA SEE 25-41-51-42J FOR NHA SEE 25-41-51-42L FOR NHA SEE 25-41-51-42M FOR NHA SEE 25-41-51-42N FOR NHA SEE 25-41-51-42P FOR NHA SEE 25-41-51-42Q FOR NHA SEE 25-41-51-42S FOR NHA SEE 25-41-51-42T FOR NHA SEE 25-41-51-42U FOR NHA		

- ITEM NOT ILLUSTRATED

FIG. ITEM	PART NUMBER	AIRLINE STOCK NUMBER	NOMENCLATURE 1234567	EFF CODE	UNITS PER ASSY
-001B	D2549010514079		. TABLE-NURSING NP used on 160D (25415101P), 160E (25415101X), 160F (25415141N), 160D (254151420), 160C (25415142J) SEE 25-41-51-01P FOR NHA SEE 25-41-51-01X FOR NHA SEE 25-41-51-41N FOR NHA SEE 25-41-51-420 FOR NHA SEE 25-41-51-42J FOR NHA		RF

- ITEM NOT ILLUSTRATED

FIG. ITEM	PART NUMBER	AIRLINE STOCK NUMBER	NOMENCLATURE 1234567	EFF CODE	UNITS PER ASSY
-001C	D2549010510679		. TABLE-NURSING NP PRE VSB A2-254-25-106 used on 160E (254151010), 160E (25415101A), 160E(25415101B), 160E (25415101E), 160D (25415101F), 160D(25415101G), 160D (25415101J), 160D (25415101M), 160B(25415101N), 160E (25415101P), 160D (25415101Q), 160B(25415101S), 160B (25415101T), 160A (25415101U), 160D(25415101V), 160C (25415101W), 160B (25415101X), 160E(25415101Y), 160A (25415101Z), 160A (254151410), 160C(25415141A), 160D (25415141B), 160B (25415141C), 160A(25415141D), 160C (25415141F), 160C (25415141G), 160B(25415141H), 160D (25415141J), 160A (25415141K), 160A(25415141L), 160A (25415141M), 160B (25415141N), 160A(25415141P), 170A (25415141Q), 160B (25415141R), 160B(25415141S), 160A (25415141T), 160A (25415141U), 160A(25415141V), 160A (25415141W), 160C (25415141X), 160B(25415141Y), 160A (25415141Z), 160E (254151420), 160A(25415142A), 160A (25415142B), 160A (25415142C), 160A(25415142D), 160B (25415142E), 160A (25415142F), 160A(25415142G), 160B (25415142H), 160A (25415142J), 160A(25415142K), 160B (25415142L), 160B (25415142M), 160A(25415142N),		RF

- ITEM NOT ILLUSTRATED

FIG. ITEM	PART NUMBER	AIRLINE STOCK NUMBER	NOMENCLATURE 1234567	EFF CODE	UNITS PER ASSY
			160A (25415142P), 160A (25415142Q), 160C(25415142R), 160B (25415142S), 160A (25415142T), 160A(25415142U), 160D (25415142U) SEE 25-41-51-010 FOR NHA SEE 25-41-51-01A FOR NHA SEE 25-41-51-01B FOR NHA SEE 25-41-51-01E FOR NHA SEE 25-41-51-01F FOR NHA SEE 25-41-51-01G FOR NHA SEE 25-41-51-01J FOR NHA SEE 25-41-51-01M FOR NHA SEE 25-41-51-01N FOR NHA SEE 25-41-51-01P FOR NHA SEE 25-41-51-01Q FOR NHA SEE 25-41-51-01S FOR NHA SEE 25-41-51-01T FOR NHA SEE 25-41-51-01U FOR NHA SEE 25-41-51-01V FOR NHA SEE 25-41-51-01W FOR NHA SEE 25-41-51-01X FOR NHA SEE 25-41-51-01Y FOR NHA SEE 25-41-51-01Z FOR NHA SEE 25-41-51-410 FOR NHA SEE 25-41-51-41A FOR NHA SEE 25-41-51-41B FOR NHA SEE 25-41-51-41C FOR NHA SEE 25-41-51-41D FOR NHA SEE 25-41-51-41F FOR NHA SEE 25-41-51-41G FOR NHA SEE 25-41-51-41H FOR NHA SEE 25-41-51-41J FOR NHA SEE 25-41-51-41K FOR NHA SEE 25-41-51-41L FOR NHA SEE 25-41-51-41M FOR NHA SEE 25-41-51-41N FOR NHA SEE 25-41-51-41P FOR NHA SEE 25-41-51-41Q FOR NHA SEE 25-41-51-41R FOR NHA		

- ITEM NOT ILLUSTRATED

FIG. ITEM	PART NUMBER	AIRLINE STOCK NUMBER	NOMENCLATURE 1234567	EFF CODE	UNITS PER ASSY
			SEE 25-41-51-41S FOR NHA SEE 25-41-51-41T FOR NHA SEE 25-41-51-41U FOR NHA SEE 25-41-51-41V FOR NHA SEE 25-41-51-41W FOR NHA SEE 25-41-51-41X FOR NHA SEE 25-41-51-41Y FOR NHA SEE 25-41-51-41Z FOR NHA SEE 25-41-51-420 FOR NHA SEE 25-41-51-42A FOR NHA SEE 25-41-51-42B FOR NHA SEE 25-41-51-42C FOR NHA SEE 25-41-51-42D FOR NHA SEE 25-41-51-42E FOR NHA SEE 25-41-51-42F FOR NHA SEE 25-41-51-42G FOR NHA SEE 25-41-51-42H FOR NHA SEE 25-41-51-42J FOR NHA SEE 25-41-51-42K FOR NHA SEE 25-41-51-42L FOR NHA SEE 25-41-51-42M FOR NHA SEE 25-41-51-42N FOR NHA SEE 25-41-51-42P FOR NHA SEE 25-41-51-42Q FOR NHA SEE 25-41-51-42R FOR NHA SEE 25-41-51-42S FOR NHA SEE 25-41-51-42T FOR NHA SEE 25-41-51-42U FOR NHA SEE TBD FOR NHA		

- ITEM NOT ILLUSTRATED

FIG. ITEM	PART NUMBER	AIRLINE STOCK NUMBER	NOMENCLATURE 1234567	EFF CODE	UNITS PER ASSY
-001D	D2549030508479		. TABLE-NURSING NP used on 160A (25415101Q), 160E (25415101S), 160C (25415101V), 160B (25415101W), 160D (25415101Z), 160C(25415141B), 160B (25415141D), 160B (25415141G), 160D(25415141M), 160A (25415141N), 160C (25415141W) SEE 25-41-51-01Q FOR NHA SEE 25-41-51-01S FOR NHA SEE 25-41-51-01V FOR NHA SEE 25-41-51-01W FOR NHA SEE 25-41-51-01Z FOR NHA SEE 25-41-51-41B FOR NHA SEE 25-41-51-41D FOR NHA SEE 25-41-51-41G FOR NHA SEE 25-41-51-41M FOR NHA SEE 25-41-51-41N FOR NHA SEE 25-41-51-41W FOR NHA		RF

- ITEM NOT ILLUSTRATED

FIG. ITEM	PART NUMBER	AIRLINE STOCK NUMBER	NOMENCLATURE 1234567	EFF CODE	UNITS PER ASSY
-001E	D2549020613679		. TABLE-NURSING NP used on 160B (25415101G), 160D (25415101K), 160B (25415101M), 160B (25415101Q), 160C (25415101T), 160E(25415101V), 160D (25415101W), 160B (25415101Y), 160E(25415141B), 160D (25415141D), 160E (25415141G), 160D(25415141H), 160C (25415141K), 160C (25415141M), 160C(25415141N), 160B (25415141T), 160D (25415141W), 160D(25415141X), 160A (254151420), 160D (25415142E) SEE 25-41-51-01G FOR NHA SEE 25-41-51-01K FOR NHA SEE 25-41-51-01M FOR NHA SEE 25-41-51-01Q FOR NHA SEE 25-41-51-01T FOR NHA SEE 25-41-51-01V FOR NHA SEE 25-41-51-01W FOR NHA SEE 25-41-51-01Y FOR NHA SEE 25-41-51-41B FOR NHA SEE 25-41-51-41D FOR NHA SEE 25-41-51-41G FOR NHA SEE 25-41-51-41H FOR NHA SEE 25-41-51-41K FOR NHA SEE 25-41-51-41M FOR NHA SEE 25-41-51-41N FOR NHA SEE 25-41-51-41T FOR NHA SEE 25-41-51-41W FOR NHA SEE 25-41-51-41X FOR NHA SEE 25-41-51-420 FOR NHA SEE 25-41-51-42E FOR NHA		RF

- ITEM NOT ILLUSTRATED

FIG. ITEM	PART NUMBER	AIRLINE STOCK NUMBER	NOMENCLATURE 1234567	EFF CODE	UNITS PER ASSY
-001F	D2549010600279		. TABLE-NURSING NP used on 160E (25415101Q), 160D (25415101S), 160C (25415101U), 160B (25415101V), 160C (25415101Z), 160D (25415141A), 160C (25415141D), 160B (25415141F), 160C(25415141H), 160C (25415141J), 160C (25415141L) SEE 25-41-51-01Q FOR NHA SEE 25-41-51-01S FOR NHA SEE 25-41-51-01U FOR NHA SEE 25-41-51-01V FOR NHA SEE 25-41-51-01Z FOR NHA SEE 25-41-51-41A FOR NHA SEE 25-41-51-41D FOR NHA SEE 25-41-51-41F FOR NHA SEE 25-41-51-41H FOR NHA SEE 25-41-51-41J FOR NHA SEE 25-41-51-41L FOR NHA		RF

- ITEM NOT ILLUSTRATED

FIG. ITEM	PART NUMBER	AIRLINE STOCK NUMBER	NOMENCLATURE 1234567		EFF CODE	UNITS PER ASSY
-001G	D2549030508679		. TABLE-NURSING used on 160F (25415101Q), 160E (25415101U), 160C (25415101X), 160D (25415101Y), 160C (25415141C), 160A (25415141F), 160E (25415141H), 160E (25415141N), 160B (25415141W), 160B (25415141X), 160B (254151420) SEE 25-41-51-01Q FOR NHA SEE 25-41-51-01U FOR NHA SEE 25-41-51-01X FOR NHA SEE 25-41-51-01Y FOR NHA SEE 25-41-51-41C FOR NHA SEE 25-41-51-41F FOR NHA SEE 25-41-51-41H FOR NHA SEE 25-41-51-41N FOR NHA SEE 25-41-51-41W FOR NHA SEE 25-41-51-41X FOR NHA SEE 25-41-51-420 FOR NHA	NP		RF
-001H	D2549020612279		. TABLE-NURSING used on 160A (25415101S), 160E (25415101W), 160C(25415101Y), 160C (254151410), 160F (25415141G) SEE 25-41-51-01S FOR NHA SEE 25-41-51-01W FOR NHA SEE 25-41-51-01Y FOR NHA SEE 25-41-51-410 FOR NHA SEE 25-41-51-41G FOR NHA	NP		RF
-001J	D2549010602079		. TABLE-NURSING used on 160D (25415101U), 160D (25415101X), 160D (25415141C) SEE 25-41-51-01U FOR NHA SEE 25-41-51-01X FOR NHA SEE 25-41-51-41C FOR NHA	NP		RF

- ITEM NOT ILLUSTRATED

FIG. ITEM	PART NUMBER	AIRLINE STOCK NUMBER	NOMENCLATURE 1234567	EFF CODE	UNITS PER ASSY
-001K	D2549020702679		. TABLE-NURSING NP used on 160F (25415101Y), 160A (25415141G), 160A(25415141R) SEE 25-41-51-01Y FOR NHA SEE 25-41-51-41G FOR NHA SEE 25-41-51-41R FOR NHA		RF
-001L	D2549020600479		. TABLE-NURSING NP used on 160D (254151410) SEE 25-41-51-410 FOR NHA		RF
-001M	D2549010513879		. TABLE-NURSING NP used on 160A (25415141B) SEE 25-41-51-41B FOR NHA		RF
-001N	D2549030606079		. TABLE-NURSING NP used on 160A (25415141J) SEE 25-41-51-41J FOR NHA		RF
-001P	D2549010500479		. TABLE-NURSING NP POST VSB A2-254-25-032 used on 160C (25415101L) SEE 25-41-51-01L FOR NHA		RF
-001Q	R22540166200079		. TABLE-NURSING NP POST VSB A2-254-25-106 used on 160C (25415142C), 160F (25415142G), 160E (25415142L), 160F (25415142T) SEE 25-41-51-42C FOR NHA SEE 25-41-51-42G FOR NHA SEE 25-41-51-42L FOR NHA SEE 25-41-51-42T FOR NHA		RF

- ITEM NOT ILLUSTRATED

FIG. ITEM	PART NUMBER	AIRLINE STOCK NUMBER	NOMENCLATURE 1234567	EFF CODE	UNITS PER ASSY
-001R	R22540119604679		. TABLE-NURSING NP POST VSB A2-254-25-130 used on 160E (254151410), 160D (25415141K), 160G (25415141N), 160E (25415141R), 160F (25415141W), 160E (25415141X), 160F (254151420), 160E (25415142E), 160D (25415142J), 160C (25415142P) SEE 25-41-51-410 FOR NHA SEE 25-41-51-41K FOR NHA SEE 25-41-51-41N FOR NHA SEE 25-41-51-41R FOR NHA SEE 25-41-51-41W FOR NHA SEE 25-41-51-41X FOR NHA SEE 25-41-51-420 FOR NHA SEE 25-41-51-42E FOR NHA SEE 25-41-51-42J FOR NHA SEE 25-41-51-42P FOR NHA		RF
010A	A225400400-652		. . TABLE ASSY-NURSING PRE VSB A2-254-25-130 POST SB 25-1214 POST VSB A2-254-25-032 used on 001A, 001P		001
-010B	A225400400-600		. . TABLE ASSY-NURSING used on 001B		001
-010C	A225400400-602		. . TABLE ASSY-NURSING POST SB 25-1214 PRE VSB A2-254-25-106 used on 001C, 001N		001
-010D	A225400400-612		. . TABLE ASSY-NURSING POST SB 25-1214 used on 001D		001

- ITEM NOT ILLUSTRATED

FIG. ITEM	PART NUMBER	AIRLINE STOCK NUMBER	NOMENCLATURE 1234567	EFF CODE	UNITS PER ASSY
-010E	A225400400-656		. . TABLE ASSY-NURSING used on 001E		001
-010F	A225400400-670		. . TABLE ASSY-NURSING used on 001F		001
-010G	A225400400-626		. . TABLE ASSY-NURSING used on 001G		001
-010H	A225400400-624		. . TABLE ASSY-NURSING used on 001H		001
-010J	A225400400-654		. . TABLE ASSY-NURSING used on 001J		001
-010K	A225400400-650		. . TABLE ASSY-NURSING used on 001K		001
-010L	A225400400-658		. . TABLE ASSY-NURSING POST SB 25-1214 used on 001L		001
-010M	A225400400-620		. . TABLE ASSY-NURSING POST SB 25-1214 used on 001M		001
-010N	A225400400-642		. . TABLE ASSY-NURSING POST VSB A2-254-25-106 used on 001Q		001
-010P	A225400400-676		. . TABLE ASSY-NURSING POST VSB A2-254-25-130 used on 001R		001
020A	A20054-3		. . . LATCH ASSY used on 010A, 010B, 010C, 010D, 010E, 010F, 010G, 010H, 010J, 010K, 010L, 010M, 010N, 010P		001

- ITEM NOT ILLUSTRATED

FIG. ITEM	PART NUMBER	AIRLINE STOCK NUMBER	NOMENCLATURE 1234567	EFF CODE	UNITS PER ASSY
030A	NAS514P832-6		. . . SCREW used on 010A, 010B, 010C, 010D, 010E, 010F, 010G, 010H, 010J, 010K, 010L, 010M, 010N, 010P		008
040A	A225400401-000		. . . HINGE used on 010A, 010B, 010C, 010D, 010E, 010F, 010G, 010H, 010J, 010K, 010L, 010M, 010N, 010P		001
-050A	NAS1833C08-370		. . . INSERT used on 010A, 010B, 010C, 010D, 010E, 010F, 010G, 010H, 010J, 010K, 010L, 010M, 010N, 010P		006
060A	DCIN108-02DA2-1		. . . BUMPER used on 010A, 010B, 010C, 010D, 010E, 010F, 010G, 010H, 010J, 010K, 010L, 010M, 010N, 010P		002
070A	DCIN108-02DA2-1		. . BUMPER POST SB 25-1214 used on 001A, 001B, 001C, 001D, 001E, 001F, 001G, 001H, 001J, 001K, 001L, 001M, 001N, 001Q, 001R		001
080A	A225400403-602		. . HOOK ASSY PRE VSB A2-254-25-130 POST SB 25-1214 POST VSB A2-254-25-032 PRE VSB A2-254-25-106 used on 001A, 001C, 001N, 001P		001
-080B	A225400403-618		. . HOOK ASSY used on 001B, 001K		001

- ITEM NOT ILLUSTRATED

FIG. ITEM	PART NUMBER	AIRLINE STOCK NUMBER	NOMENCLATURE 1234567	EFF CODE	UNITS PER ASSY
-080C	A225400403-626		. . HOOK ASSY POST SB 25-1214 used on 001D		001
-080D	A225400403-604		. . HOOK ASSY used on 001E		001
-080E	A225400403-628		. . HOOK ASSY used on 001F, 001M		001
-080F	A225400403-620		. . HOOK ASSY used on 001G		001
-080G	A225400403-634		. . HOOK ASSY used on 001H		001
-080H	A225400403-600		. . HOOK ASSY used on 001J		001
-080J	A225400403-612		. . HOOK ASSY POST SB 25-1214 used on 001L		001
-080K	A225400403-502		. . HOOK ASSY used on 001A, 001C, 001N		001
-080L	A225400403-668		. . HOOK ASSY POST VSB A2-254-25-106 used on 001Q		001
-080M	A225400403-636		. . HOOK ASSY POST VSB A2-254-25-130 used on 001R		001

- ITEM NOT ILLUSTRATED

FIG. ITEM	PART NUMBER	AIRLINE STOCK NUMBER	NOMENCLATURE 1234567	EFF CODE	UNITS PER ASSY
090A	NAS514P832-6		. . SCREW PRE VSB A2-254-25-130 PRE VSB A2-254-25-032 PRE VSB A2-254-25-106 POST SB 25-1214 used on 001A, 001B, 001C, 001D, 001E, 001F, 001G, 001H, 001J, 001K, 001L, 001M, 001N		008
-090B	NAS514P832-4		. . SCREW POST VSB A2-254-25-032 used on 001P		006
-090C	NAS514P832-12		. . SCREW POST VSB A2-254-25-106 used on 001Q		006
-090D	NAS514P832-5		. . SCREW POST VSB A2-254-25-130 used on 001R		008
-092A	NAS1102-08-5		. . SCREW POST VSB A2-254-25-032 used on 001P		002
-092B	NAS1100-08-5		. . SCREW POST VSB A2-254-25-106 used on 001Q		002
100A	66333493		. . BUMPER POST SB 25-1214 BUY PN SJ5302TRANSPAR used on 001A, 001B, 001C, 001D, 001E, 001F, 001G, 001H, 001J, 001K, 001L, 001M, 001N, 001Q, 001R		001

- ITEM NOT ILLUSTRATED

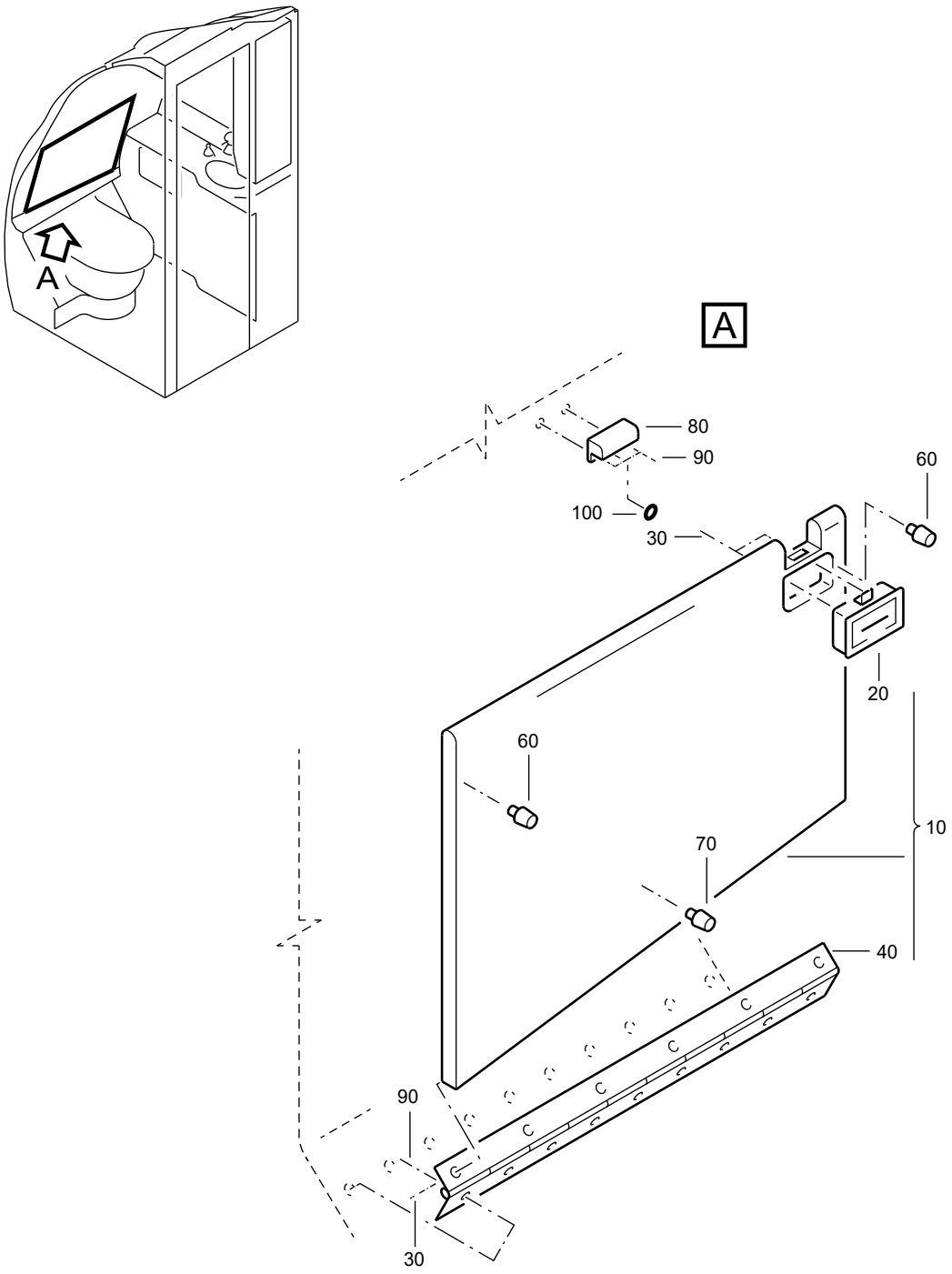

F_PL_254151_20_B_01_00

TABLE-NURSING
Figure 20B/EN254151SHEET20B01

FIG. ITEM	PART NUMBER	AIRLINE STOCK NUMBER	NOMENCLATURE 1234567	EFF CODE	UNITS PER ASSY
20B					
-001A	D2549020710079		. TABLE-NURSING NP used on 160B (25415141A), 160B (25415141J), 160C (25415141V), 160C (25415141Y), 160B (25415142K) SEE 25-41-51-41A FOR NHA SEE 25-41-51-41J FOR NHA SEE 25-41-51-41V FOR NHA SEE 25-41-51-41Y FOR NHA SEE 25-41-51-42K FOR NHA		RF
-001B	D2549020509679		. TABLE-NURSING NP used on 160E (25415141J) SEE 25-41-51-41J FOR NHA		RF
-001C	D2549030614679		. TABLE-NURSING NP used on 160E (25415141M), 160C (25415141P), 160C (25415142F), 160B (25415142G), 160A (25415142H), 160B (25415142N), 160C (25415142Q), 160A (25415142R), 160C(25415142S), 160B (25415142T), 160C (25415142U) SEE 25-41-51-41M FOR NHA SEE 25-41-51-41P FOR NHA SEE 25-41-51-42F FOR NHA SEE 25-41-51-42G FOR NHA SEE 25-41-51-42H FOR NHA SEE 25-41-51-42N FOR NHA SEE 25-41-51-42Q FOR NHA SEE 25-41-51-42R FOR NHA SEE 25-41-51-42S FOR NHA SEE 25-41-51-42T FOR NHA SEE 25-41-51-42U FOR NHA		RF

- ITEM NOT ILLUSTRATED

FIG. ITEM	PART NUMBER	AIRLINE STOCK NUMBER	NOMENCLATURE 1234567		EFF CODE	UNITS PER ASSY
-001D	D2549020510679		. TABLE-NURSING used on 160D (25415141R), 160A (25415142E), 160C (25415142K), 160D (25415142L), 160B (25415142R), 160D (25415142T) SEE 25-41-51-41R FOR NHA SEE 25-41-51-42E FOR NHA SEE 25-41-51-42K FOR NHA SEE 25-41-51-42L FOR NHA SEE 25-41-51-42R FOR NHA SEE 25-41-51-42T FOR NHA	NP		RF
-001E	D2549010613279		. TABLE-NURSING used on 160C (25415141Z), 160E (25415142G) SEE 25-41-51-41Z FOR NHA SEE 25-41-51-42G FOR NHA	NP		RF
-001F	D2549030408279		. TABLE-NURSING used on 160C (25415142D), 160C (25415142L), 160C (25415142N), 160E (25415142S), 160E (25415142T) SEE 25-41-51-42D FOR NHA SEE 25-41-51-42L FOR NHA SEE 25-41-51-42N FOR NHA SEE 25-41-51-42S FOR NHA SEE 25-41-51-42T FOR NHA	NP		RF
-001G	D2549030414679		. TABLE-NURSING used on 160D (25415142N), 160D (25415142S) SEE 25-41-51-42N FOR NHA SEE 25-41-51-42S FOR NHA	NP		RF
-001H	D2549020411279		. TABLE-NURSING used on 160D (25415142Q) SEE 25-41-51-42Q FOR NHA	NP		RF

- ITEM NOT ILLUSTRATED

FIG. ITEM	PART NUMBER	AIRLINE STOCK NUMBER	NOMENCLATURE 1234567	EFF CODE	UNITS PER ASSY
-001J	D2549030702079		. TABLE-NURSING NP used on 160D (25415142R) SEE 25-41-51-42R FOR NHA		RF
010A	A225400400-628		. . TABLE ASSY-NURSING used on 001A		001
-010B	A225400400-602		. . TABLE ASSY-NURSING used on 001B		001
-010C	A225400400-622		. . TABLE ASSY-NURSING POST SB 25-1674 used on 001C		001
-010D	A225400400-674		. . TABLE ASSY-NURSING used on 001D		001
-010E	A225400400-676		. . TABLE ASSY-NURSING used on 001E		001
-010F	A225400400-678		. . TABLE ASSY-NURSING used on 001F		001
-010G	A225400400-630		. . TABLE ASSY-NURSING used on 001G		001
-010H	A225400400-632		. . TABLE ASSY-NURSING used on 001H		001
-010J	A225400400-610		. . TABLE ASSY-NURSING used on 001J		001
020A	A20054-3		. . . LATCH ASSY used on 010A, 010B, 010C, 010D, 010E, 010F, 010G, 010H, 010J		001
030A	NAS514P832-6		. . . SCREW used on 010A, 010B, 010C, 010D, 010E, 010F, 010G, 010H, 010J		008

- ITEM NOT ILLUSTRATED

FIG. ITEM	PART NUMBER	AIRLINE STOCK NUMBER	NOMENCLATURE 1234567	EFF CODE	UNITS PER ASSY
040A	A225400401-000		. . . HINGE used on 010A, 010B, 010C, 010D, 010E, 010F, 010G, 010H, 010J		001
-050A	NAS1833C08-370		. . . INSERT used on 010A, 010B, 010C, 010D, 010E, 010F, 010G, 010H, 010J		006
060A	DCIN108-02DA2-1		. . . BUMPER used on 010A, 010B, 010C, 010D, 010E, 010F, 010G, 010H, 010J		002
070A	DCIN108-02DA2-1		. . BUMPER used on 001A, 001B, 001C, 001D, 001E, 001F, 001G, 001H, 001J		001
080A	A225400403-640		. . HOOK ASSY used on 001A, 001D		001
-080B	A225400403-644		. . HOOK ASSY used on 001B		001
-080C	A225400403-636		. . HOOK ASSY POST SB 25-1674 used on 001C, 001E		001
-080D	A225400403-650		. . HOOK ASSY used on 001F		001
-080E	A225400403-648		. . HOOK ASSY used on 001G		001
-080F	A225400403-652		. . HOOK ASSY used on 001H		001
-080G	A225400403-616		. . HOOK ASSY used on 001J		001

- ITEM NOT ILLUSTRATED

FIG. ITEM	PART NUMBER	AIRLINE STOCK NUMBER	NOMENCLATURE 1234567	EFF CODE	UNITS PER ASSY
090A	NAS514P832-6		. . SCREW used on 001A, 001B, 001C, 001D, 001E, 001F, 001G, 001H, 001J		008
100A	66333493		. . BUMPER BUY PN SJ5302TRANSPAR used on 001A, 001B, 001C, 001D, 001E, 001F, 001G, 001H, 001J		001

- ITEM NOT ILLUSTRATED

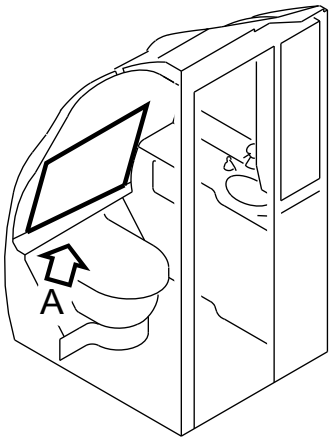

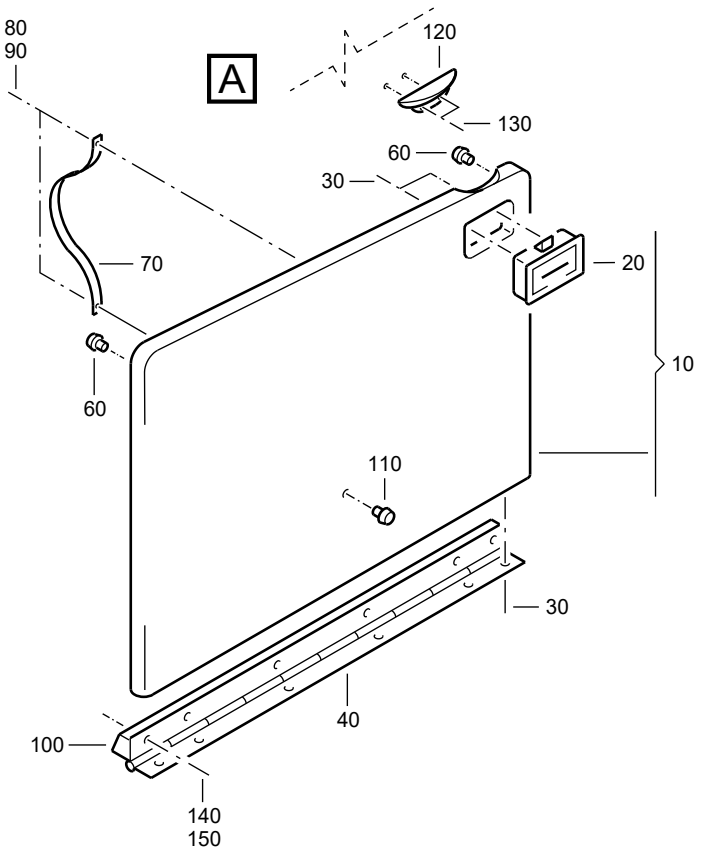

F_PL_254151_20_C_01_00

TABLE-NURSING
Figure 20C/EN254151SHEET20C01

FIG. ITEM	PART NUMBER	AIRLINE STOCK NUMBER	NOMENCLATURE 1234567	EFF CODE	UNITS PER ASSY
20C					
-001A	D2549020813279		. TABLE-NURSING NP used on 160B (25415142D), 160D (25415142G) SEE 25-41-51-42D FOR NHA SEE 25-41-51-42G FOR NHA		RF
010A	A225401400-550		. . TABLE ASSY-NURSING used on 001A		001
020A	A20134-1		. . . LATCH ASSY used on 010A		001
030A	NAS514P832-6		. . . SCREW used on 010A		006
040A	A225400401-000		. . . HINGE used on 010A		001
-050A	NAS1833C08-370		. . . INSERT used on 010A		002
060A	DCIN108-02DA2-1		. . . BUMPER used on 010A		002
070A	8427-11		. . . BELT used on 010A		001
080A	NAS1102-08-10		. . . SCREW used on 010A		002
090A	0-123-000700000		. . . WASHER used on 010A		002
100A	A225401402-000		. . . STRIP ASSY-SPACER used on 010A		001
110A	DCIN108-02DA2-1		. . BUMPER used on 001A		001

- ITEM NOT ILLUSTRATED

FIG. ITEM	PART NUMBER	AIRLINE STOCK NUMBER	NOMENCLATURE 1234567	EFF CODE	UNITS PER ASSY
120A	A425400404-558		. . CATCH used on 001A		001
130A	NAS514P832-6		. . SCREW used on 001A		002
140A	NAS1096-2-10		. . SCREW BUY PN NAS1801-08-10 used on 001A		006
150A	NAS1149CN832R		. . WASHER used on 001A		006

- ITEM NOT ILLUSTRATED

THIS PAGE IS INTENTIONALLY LEFT BLANK

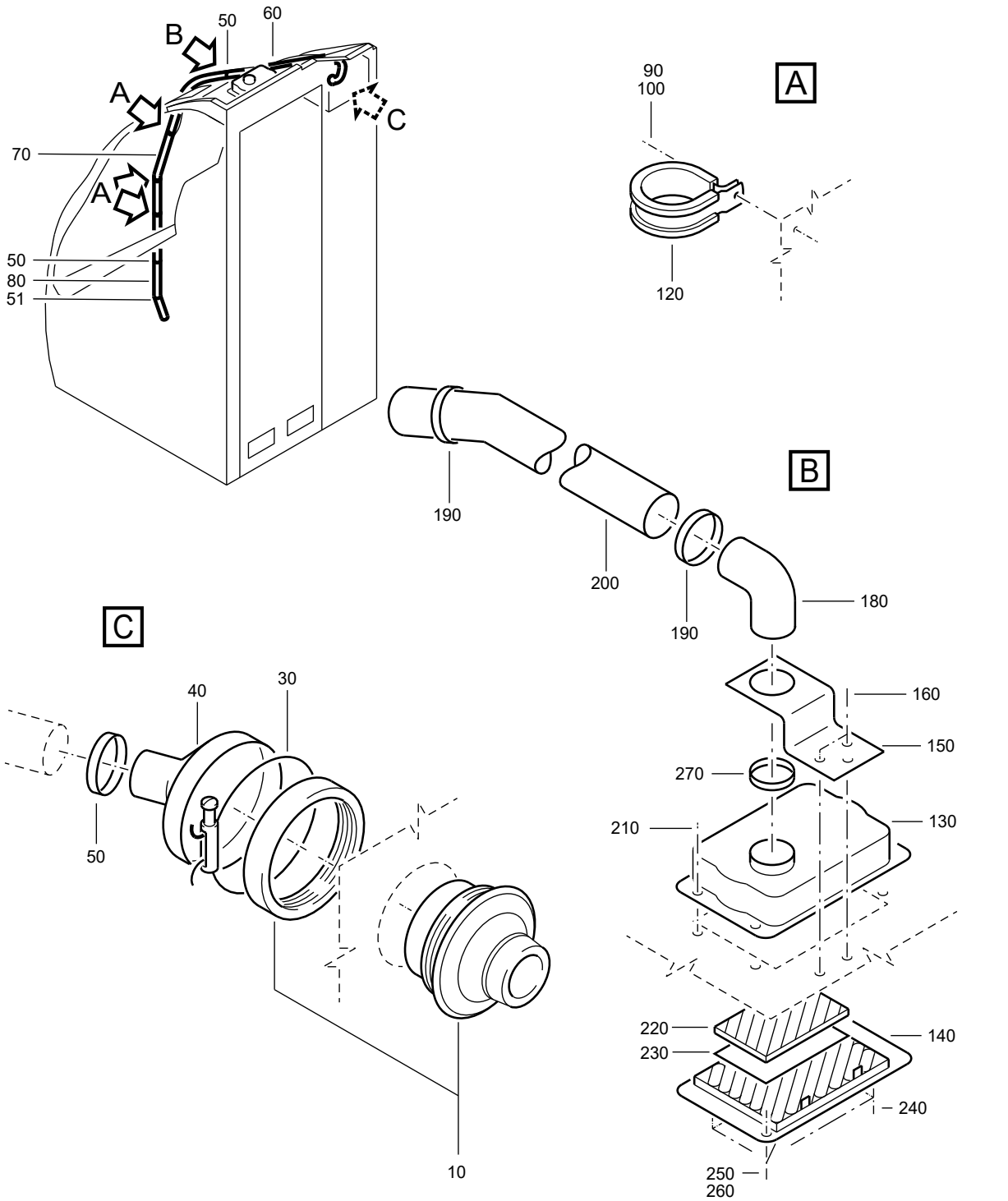

F_PL_254151_21_0_01_00

VENTILATION SYSTEM
Figure 21/EN254151SHEET21001

FIG. ITEM	PART NUMBER	AIRLINE STOCK NUMBER	NOMENCLATURE 1234567	EFF CODE	UNITS PER ASSY
21 -001A	D2549010500080		. VENTILATION SYSTEM NP used on 170A (254151010), 170A (25415101A), 170C(25415101B), 170A (25415101C), 170A (25415101D), 170A(25415101E), 170A (25415101F), 170A (25415101G), 170A(25415101H), 170B (25415101J), 170D (25415101K), 170C(25415101L), 170C (25415101M), 170D (25415101N), 170B(25415141B), 170C (25415141T) SEE 25-41-51-010 FOR NHA SEE 25-41-51-01A FOR NHA SEE 25-41-51-01B FOR NHA SEE 25-41-51-01C FOR NHA SEE 25-41-51-01D FOR NHA SEE 25-41-51-01E FOR NHA SEE 25-41-51-01F FOR NHA SEE 25-41-51-01G FOR NHA SEE 25-41-51-01H FOR NHA SEE 25-41-51-01J FOR NHA SEE 25-41-51-01K FOR NHA SEE 25-41-51-01L FOR NHA SEE 25-41-51-01M FOR NHA SEE 25-41-51-01N FOR NHA SEE 25-41-51-41B FOR NHA SEE 25-41-51-41T FOR NHA		RF

- ITEM NOT ILLUSTRATED

FIG. ITEM	PART NUMBER	AIRLINE STOCK NUMBER	NOMENCLATURE 1234567		EFF CODE	UNITS PER ASSY
-001B	D2549020500080		. VENTILATION SYSTEM used on 170B (254151010), 170C (25415101A), 170A(25415101B), 170B (25415101D), 170B (25415101E), 170B(25415101F), 170B (25415101G) SEE 25-41-51-010 FOR NHA SEE 25-41-51-01A FOR NHA SEE 25-41-51-01B FOR NHA SEE 25-41-51-01D FOR NHA SEE 25-41-51-01E FOR NHA SEE 25-41-51-01F FOR NHA SEE 25-41-51-01G FOR NHA	NP		RF
-001C	D2549010500480		. VENTILATION SYSTEM used on 170C (254151010), 170B (25415101A), 170B(25415101B), 170C (25415101E), 170C (25415101F) SEE 25-41-51-010 FOR NHA SEE 25-41-51-01A FOR NHA SEE 25-41-51-01B FOR NHA SEE 25-41-51-01E FOR NHA SEE 25-41-51-01F FOR NHA	NP		RF
-001D	D2549020600480		. VENTILATION SYSTEM used on 170C (254151410) SEE 25-41-51-410 FOR NHA	NP		RF

- ITEM NOT ILLUSTRATED

FIG. ITEM	PART NUMBER	AIRLINE STOCK NUMBER	NOMENCLATURE 1234567		EFF CODE	UNITS PER ASSY
-001E	D2549030504880		. VENTILATION SYSTEM used on 170A (25415101J), 170B (25415101K), 170A(25415101L), 170A (25415101M), 170A (25415101N), 170B(25415101P), 170C (25415101Q), 170A (25415101R), 170A(25415101T), 170D (254151410), 170D (25415141B), 170D(25415141F) SEE 25-41-51-01J FOR NHA SEE 25-41-51-01K FOR NHA SEE 25-41-51-01L FOR NHA SEE 25-41-51-01M FOR NHA SEE 25-41-51-01N FOR NHA SEE 25-41-51-01P FOR NHA SEE 25-41-51-01Q FOR NHA SEE 25-41-51-01R FOR NHA SEE 25-41-51-01T FOR NHA SEE 25-41-51-410 FOR NHA SEE 25-41-51-41B FOR NHA SEE 25-41-51-41F FOR NHA	NP		RF
-001F	D2549020506280		. VENTILATION SYSTEM used on 170C (25415101J), 170C (25415101K), 170B(25415101M), 170A (25415101P) SEE 25-41-51-01J FOR NHA SEE 25-41-51-01K FOR NHA SEE 25-41-51-01M FOR NHA SEE 25-41-51-01P FOR NHA	NP		RF
-001G	D2549010509480		. VENTILATION SYSTEM used on 170D (25415101J), 170C (25415101P) SEE 25-41-51-01J FOR NHA SEE 25-41-51-01P FOR NHA	NP		RF

- ITEM NOT ILLUSTRATED

FIG. ITEM	PART NUMBER	AIRLINE STOCK NUMBER	NOMENCLATURE 1234567		EFF CODE	UNITS PER ASSY
-001H	D2549030505680		. VENTILATION SYSTEM used on 170A (25415101K), 170D (25415101P) SEE 25-41-51-01K FOR NHA SEE 25-41-51-01P FOR NHA	NP		RF
-001J	D2549030506080		. VENTILATION SYSTEM used on 170C (25415141B) SEE 25-41-51-41B FOR NHA	NP		RF
-001K	D2549020610280		. VENTILATION SYSTEM used on 170B (25415101N) SEE 25-41-51-01N FOR NHA	NP		RF
-001L	D2549010513880		. VENTILATION SYSTEM used on 170A (25415141B) SEE 25-41-51-41B FOR NHA	NP		RF
-001M	D2549030507280		. VENTILATION SYSTEM used on 170C (25415101N) SEE 25-41-51-01N FOR NHA	NP		RF
010A	2966-01		. . OUTLET-AIR,INDIVIDUAL used on 001A, 001B, 001C, 001E, 001F, 001G, 001H, 001J, 001K, 001L, 001M			001
-010B	2966		. . OUTLET-AIR,INDIVIDUAL used on 001D			001
030A	2000-24		. . CLAMP used on 001A, 001B, 001C, 001D, 001E, 001F, 001G, 001H, 001J, 001K, 001L, 001M			001
040A	A2157036420000		. . CAP used on 001A, 001B, 001C, 001D, 001E, 001F, 001G, 001H, 001J, 001K, 001L, 001M			001

- ITEM NOT ILLUSTRATED

FIG. ITEM	PART NUMBER	AIRLINE STOCK NUMBER	NOMENCLATURE 1234567	EFF CODE	UNITS PER ASSY
050A	ASNA0032-028		. . CLAMP used on 001A, 001B, 001C, 001D		003
-050B	ASNA0033-036		. . CLAMP used on 001E, 001F, 001G, 001H, 001J, 001K, 001L, 001M		003
051A	ASNA0032-028		. . CLAMP used on 001A, 001B, 001C, 001D		001
-051B	ASNA0033-036		. . CLAMP used on 001E, 001F, 001G, 001H, 001J, 001K, 001L, 001M		001
060A	A2127053420800		. . HOSE used on 001A, 001B, 001C, 001D, 001E, 001F, 001G, 001H, 001J, 001K, 001L, 001M		001
070A	A221201000-000		. . TUBE used on 001A, 001B, 001C, 001D, 001E, 001F, 001G, 001H, 001J, 001K, 001L, 001M		001
080A	A2127053421600		. . HOSE used on 001A, 001B, 001C, 001D, 001E, 001F, 001G, 001H, 001J, 001K, 001L, 001M		001
090A	NAS1096-2-5		. . SCREW BUY PN NAS1801-08-5 used on 001A, 001B, 001C, 001D, 001E, 001F, 001G, 001H, 001J, 001K, 001L, 001M		003
100A	ASNA0113-48ADL		. . WASHER used on 001A, 001B, 001C, 001D, 001E, 001F, 001G, 001H, 001J, 001K, 001L, 001M		003

- ITEM NOT ILLUSTRATED

FIG. ITEM	PART NUMBER	AIRLINE STOCK NUMBER	NOMENCLATURE 1234567	EFF CODE	UNITS PER ASSY
120A	MS21919WCH16		. . CLAMP BUY PN AS21919WCH16 used on 001A, 001B, 001C, 001D, 001E, 001F, 001G, 001H, 001J, 001K, 001L, 001M		003
130A	A321200303-200		. . HOOD-AIR EXTRACTION used on 001A, 001B, 001D SEE SIL 21-105 FOR DET		001
-130B	A321200303-202		. . HOOD-AIR EXTRACTION used on 001C SEE SIL 21-105 FOR DET		001
-130C	A321200303-214		. . HOOD-AIR EXTRACTION used on 001C, 001G, 001K SEE SIL 21-105 FOR DET		001
-130D	A321200303-212		. . HOOD-AIR EXTRACTION used on 001A, 001B, 001D, 001E, 001F, 001H, 001J, 001L, 001M SEE SIL 21-105 FOR DET		001
140A	D2547035200000		. . GRILLE-AIR EXTRACTION used on 001A, 001C SEE SIL 21-105 FOR DET		001
-140B	D2547035201200		. . GRILLE-AIR EXTRACTION used on 001B SEE SIL 21-105 FOR DET		001
-140C	R254H150210000		. . GRILLE-AIR EXTRACTION used on 001D SEE SIL 21-105 FOR DET		001
-140D	A225400454-500		. . LOUVER used on 001E, 001G SEE SIL 21-105 FOR DET		001

- ITEM NOT ILLUSTRATED

FIG. ITEM	PART NUMBER	AIRLINE STOCK NUMBER	NOMENCLATURE 1234567	EFF CODE	UNITS PER ASSY
-140E	A225400454-512		. . LOUVER used on 001F SEE SIL 21-105 FOR DET		001
-140F	A225400454-504		. . LOUVER used on 001H SEE SIL 21-105 FOR DET		001
-140G	A225400454-522		. . LOUVER used on 001J SEE SIL 21-105 FOR DET		001
-140H	A225400454-532		. . LOUVER used on 001K SEE SIL 21-105 FOR DET		001
-140J	A225400454-530		. . LOUVER used on 001L SEE SIL 21-105 FOR DET		001
-140K	A225400454-524		. . LOUVER used on 001M SEE SIL 21-105 FOR DET		001
150A	A221201300-000		. . BRACKET-AIR EXTRACTION used on 001A, 001B, 001C, 001D, 001E, 001F, 001G, 001H, 001J, 001K, 001L, 001M		001
160A	NAS1102-08-8		. . SCREW used on 001A, 001B, 001C, 001D, 001E, 001F, 001G, 001H, 001J, 001K, 001L, 001M		003
180A	A2547545923000		. . TUBE-AIR EXTRACTION used on 001A, 001B, 001C, 001D		001
-180B	A321200304-200		. . TUBE-AIR EXTRACTION used on 001E, 001F, 001G, 001H, 001J, 001K, 001L, 001M		001

- ITEM NOT ILLUSTRATED

FIG. ITEM	PART NUMBER	AIRLINE STOCK NUMBER	NOMENCLATURE 1234567	EFF CODE	UNITS PER ASSY
190A	ASNA0032-052		. . CLAMP used on 001A, 001B, 001C, 001D		002
-190B	ASNA0033-052		. . CLAMP used on 001E, 001F, 001G, 001H, 001J, 001K, 001L, 001M		002
200A	D2127725521600		. . HOSE used on 001A, 001B, 001C, 001D, 001E, 001F, 001G, 001H, 001J, 001K, 001L, 001M		001
210A	NAS514P832-4		. . SCREW used on 001A, 001B, 001C, 001D, 001E, 001F, 001G, 001H, 001J, 001K, 001L, 001M		004
220A	A225400454-206		. . GRILLE used on 001E, 001F, 001G, 001H, 001J, 001K, 001L, 001M		001
230A	A225400454-204		. . FLEECE used on 001E, 001F, 001G, 001H, 001J, 001K, 001L, 001M		001
240A	NAS514P832-7		. . SCREW used on 001E, 001F, 001G, 001H, 001J, 001K, 001L, 001M		004
250A	NAS1102-08-6		. . SCREW POST SB 25-1198 used on 001D		002
260A	NAS1169-8L		. . WASHER POST SB 25-1198 used on 001D		002

- ITEM NOT ILLUSTRATED

FIG. ITEM	PART NUMBER	AIRLINE STOCK NUMBER	NOMENCLATURE 1234567	EFF CODE	UNITS PER ASSY
270A	A321200301-200		. . SEAL used on 001A, 001B, 001C, 001D, 001E, 001F, 001G, 001H, 001J, 001K, 001L, 001M		001

- ITEM NOT ILLUSTRATED

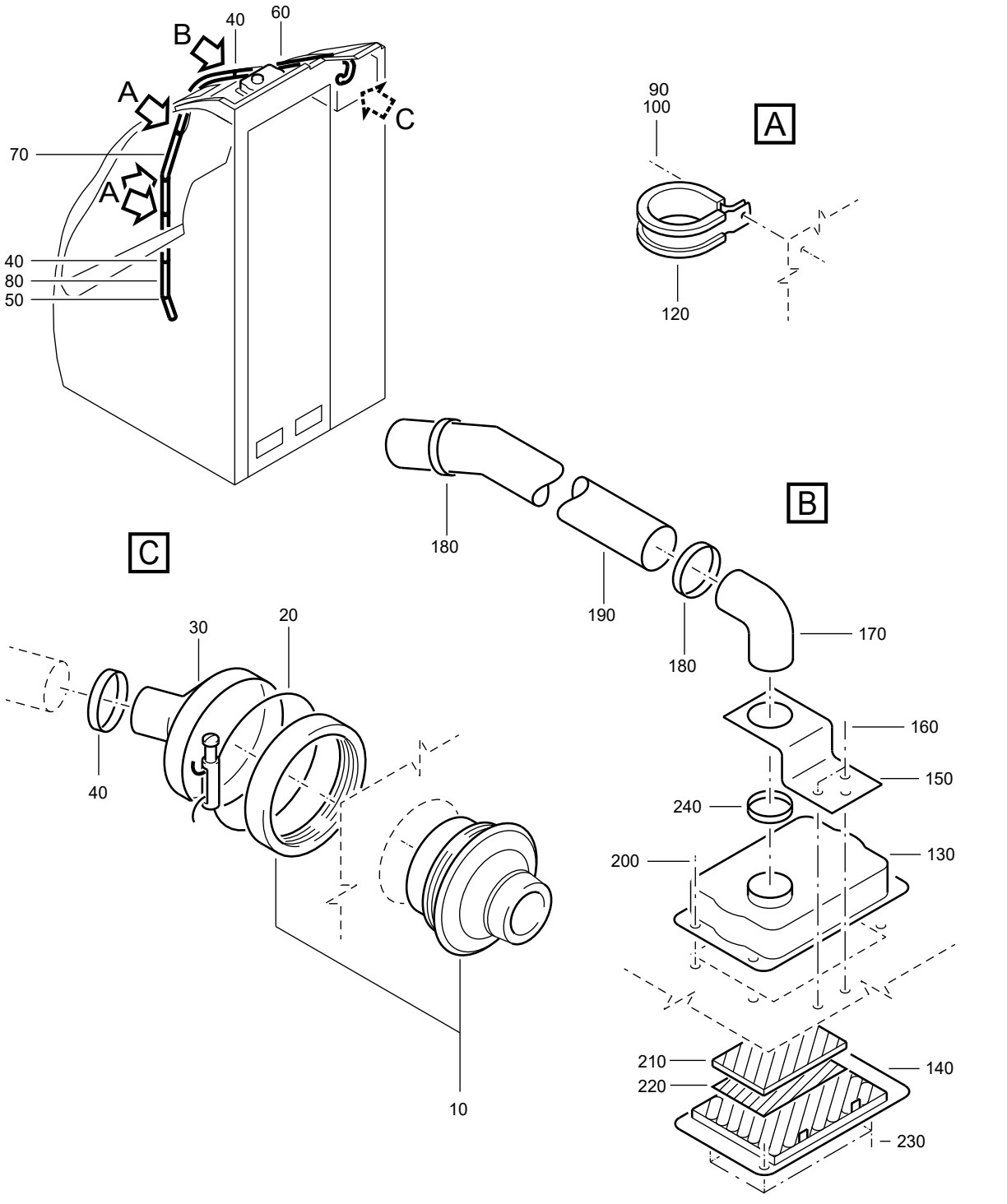

F_PL_254151_21_A_01_00

VENTILATION SYSTEM
Figure 21A/EN254151SHEET21A01

FIG. ITEM	PART NUMBER	AIRLINE STOCK NUMBER	NOMENCLATURE 1234567	EFF CODE	UNITS PER ASSY
21A -001A	D2549010514280		. VENTILATION SYSTEM NP PRE VSB A2-254-25-130 used on 170B (25415101L), 170E (25415101P), 170F(25415101Q), 170B (25415101R), 170B (25415101S), 170C(25415101T), 170A (25415101U), 170A (25415101V), 170A (25415101W), 170A (25415101X), 170A (25415101Y), 170A(25415101Z), 170A (254151410), 170A (25415141A), 170E(25415141B), 170A (25415141C), 170A (25415141D), 110A(25415141E), 170C (25415141F), 170C (25415141G), 170A(25415141H), 170A (25415141J), 170A (25415141K), 170A(25415141L), 170A (25415141M), 170B (25415141N), 170A(25415141P), 180A (25415141Q), 170E (25415141W) SEE 25-41-51-01L FOR NHA SEE 25-41-51-01P FOR NHA SEE 25-41-51-01Q FOR NHA SEE 25-41-51-01R FOR NHA SEE 25-41-51-01S FOR NHA SEE 25-41-51-01T FOR NHA SEE 25-41-51-01U FOR NHA SEE 25-41-51-01V FOR NHA SEE 25-41-51-01W FOR NHA SEE 25-41-51-01X FOR NHA SEE 25-41-51-01Y FOR NHA SEE 25-41-51-01Z FOR NHA SEE 25-41-51-410 FOR NHA SEE 25-41-51-41A FOR NHA SEE 25-41-51-41B FOR NHA SEE 25-41-51-41C FOR NHA		RF

- ITEM NOT ILLUSTRATED

FIG. ITEM	PART NUMBER	AIRLINE STOCK NUMBER	NOMENCLATURE 1234567	EFF CODE	UNITS PER ASSY
			SEE 25-41-51-41D FOR NHA SEE 25-41-51-41E FOR NHA SEE 25-41-51-41F FOR NHA SEE 25-41-51-41G FOR NHA SEE 25-41-51-41H FOR NHA SEE 25-41-51-41J FOR NHA SEE 25-41-51-41K FOR NHA SEE 25-41-51-41L FOR NHA SEE 25-41-51-41M FOR NHA SEE 25-41-51-41N FOR NHA SEE 25-41-51-41P FOR NHA SEE 25-41-51-41Q FOR NHA SEE 25-41-51-41W FOR NHA		
-001B	D2549020507080		. VENTILATION SYSTEM NP used on 170B (25415101Q), 170B (25415101T), 170D (25415101V), 170D (25415101W), 170B (25415101Y), 170F(25415141B), 170D (25415141D), 170D (25415141G), 170C(25415141H), 170B (25415141K), 170B (25415141M), 170C(25415141N) SEE 25-41-51-01Q FOR NHA SEE 25-41-51-01T FOR NHA SEE 25-41-51-01V FOR NHA SEE 25-41-51-01W FOR NHA SEE 25-41-51-01Y FOR NHA SEE 25-41-51-41B FOR NHA SEE 25-41-51-41D FOR NHA SEE 25-41-51-41G FOR NHA SEE 25-41-51-41H FOR NHA SEE 25-41-51-41K FOR NHA SEE 25-41-51-41M FOR NHA SEE 25-41-51-41N FOR NHA		RF

- ITEM NOT ILLUSTRATED

FIG. ITEM	PART NUMBER	AIRLINE STOCK NUMBER	NOMENCLATURE 1234567	EFF CODE	UNITS PER ASSY
-001C	D2549010514080		. VENTILATION SYSTEM NP used on 170F (25415101P), 170C (25415101X), 170E(25415101Y), 170A (25415141G) SEE 25-41-51-01P FOR NHA SEE 25-41-51-01X FOR NHA SEE 25-41-51-01Y FOR NHA SEE 25-41-51-41G FOR NHA		RF
-001D	D2549030508480		. VENTILATION SYSTEM NP used on 170A (25415101Q), 170D (25415101S), 170C (25415101V), 170B (25415101W), 170C (25415101Z), 170G(25415141B), 170B (25415141D), 170B (25415141G), 170C(25415141M), 170A (25415141N) SEE 25-41-51-01Q FOR NHA SEE 25-41-51-01S FOR NHA SEE 25-41-51-01V FOR NHA SEE 25-41-51-01W FOR NHA SEE 25-41-51-01Z FOR NHA SEE 25-41-51-41B FOR NHA SEE 25-41-51-41D FOR NHA SEE 25-41-51-41G FOR NHA SEE 25-41-51-41M FOR NHA SEE 25-41-51-41N FOR NHA		RF

- ITEM NOT ILLUSTRATED

FIG. ITEM	PART NUMBER	AIRLINE STOCK NUMBER	NOMENCLATURE 1234567	EFF CODE	UNITS PER ASSY
-001E	D2549030507680		. VENTILATION SYSTEM NP used on 170D (25415101Q), 170C (25415101S), 170B (25415101U), 170B (25415101V), 170B (25415101Z), 170C (25415141A), 170C (25415141D), 170B (25415141F), 170B(25415141H), 170C (25415141J), 170B (25415141L) SEE 25-41-51-01Q FOR NHA SEE 25-41-51-01S FOR NHA SEE 25-41-51-01U FOR NHA SEE 25-41-51-01V FOR NHA SEE 25-41-51-01Z FOR NHA SEE 25-41-51-41A FOR NHA SEE 25-41-51-41D FOR NHA SEE 25-41-51-41F FOR NHA SEE 25-41-51-41H FOR NHA SEE 25-41-51-41J FOR NHA SEE 25-41-51-41L FOR NHA		RF
-001F	D2549020612280		. VENTILATION SYSTEM NP used on 170A (25415101S), 170C (25415101W), 170C (25415101Y) SEE 25-41-51-01S FOR NHA SEE 25-41-51-01W FOR NHA SEE 25-41-51-01Y FOR NHA		RF

- ITEM NOT ILLUSTRATED

FIG. ITEM	PART NUMBER	AIRLINE STOCK NUMBER	NOMENCLATURE 1234567		EFF CODE	UNITS PER ASSY
-001G	D2549030508680		. VENTILATION SYSTEM used on 170E (25415101Q), 170C (25415101U), 170B (25415101X), 170D (25415101Y), 170B (25415141C), 170A (25415141F), 170D (25415141H), 170D (25415141N) SEE 25-41-51-01Q FOR NHA SEE 25-41-51-01U FOR NHA SEE 25-41-51-01X FOR NHA SEE 25-41-51-01Y FOR NHA SEE 25-41-51-41C FOR NHA SEE 25-41-51-41F FOR NHA SEE 25-41-51-41H FOR NHA SEE 25-41-51-41N FOR NHA	NP		RF
-001H	D2549020707480		. VENTILATION SYSTEM used on 170B (254151410), 170E (25415141G), 170D(25415141M) SEE 25-41-51-410 FOR NHA SEE 25-41-51-41G FOR NHA SEE 25-41-51-41M FOR NHA	NP		RF
-001J	D2549020710080		. VENTILATION SYSTEM used on 170B (25415141A), 170B (25415141J) SEE 25-41-51-41A FOR NHA SEE 25-41-51-41J FOR NHA	NP		RF
-001K	R22540119604680		. VENTILATION SYSTEM POST VSB A2-254-25-130 used on 170E (254151410), 170C (25415141K), 170G (25415141N) SEE 25-41-51-410 FOR NHA SEE 25-41-51-41K FOR NHA SEE 25-41-51-41N FOR NHA	NP		RF

- ITEM NOT ILLUSTRATED

FIG. ITEM	PART NUMBER	AIRLINE STOCK NUMBER	NOMENCLATURE 1234567	EFF CODE	UNITS PER ASSY
010A	2966-01		. . OUTLET-AIR,INDIVIDUAL used on 001A, 001B, 001C, 001D, 001E, 001F, 001G, 001H, 001J, 001K		001
020A	9HV408882-00		. . CLAMP used on 001A, 001B, 001C, 001D, 001E, 001F, 001G, 001H, 001J, 001K		001
030A	A2157036420000		. . CAP used on 001A, 001B, 001C, 001D, 001E, 001F, 001G, 001H, 001J, 001K		001
040A	ASNA0033-036		. . CLAMP used on 001A, 001B, 001C, 001D, 001E, 001F, 001G, 001H, 001J, 001K		003
050A	ASNA0033-036		. . CLAMP used on 001A, 001B, 001C, 001D, 001E, 001F, 001G, 001H, 001J, 001K		001
060A	A2127053420800		. . HOSE used on 001A, 001B, 001C, 001D, 001E, 001F, 001G, 001H, 001J, 001K		001
070A	A221201000-000		. . TUBE used on 001A, 001B, 001C, 001D, 001E, 001F, 001G, 001H, 001J, 001K		001
080A	A2127053421600		. . HOSE used on 001A, 001B, 001C, 001D, 001E, 001F, 001G, 001H, 001J, 001K		001

- ITEM NOT ILLUSTRATED

FIG. ITEM	PART NUMBER	AIRLINE STOCK NUMBER	NOMENCLATURE 1234567	EFF CODE	UNITS PER ASSY
090A	NAS1096-2-5		. . SCREW BUY PN NAS1801-08-5 used on 001A, 001B, 001C, 001D, 001E, 001F, 001G, 001H, 001J, 001K		003
100A	ASNA0113-48ADL		. . WASHER used on 001A, 001B, 001C, 001D, 001E, 001F, 001G, 001H, 001J, 001K		003
120A	MS21919WCH16		. . CLAMP BUY PN AS21919WCH16 used on 001A, 001B, 001C, 001D, 001E, 001F, 001G, 001H, 001J, 001K		003
130A	A321200303-212		. . HOOD-AIR EXTRACTION used on 001A, 001B, 001C, 001D, 001E, 001G, 001H, 001J, 001K SEE SIL 21-105 FOR DET		001
-130B	A321200303-214		. . HOOD-AIR EXTRACTION used on 001F SEE SIL 21-105 FOR DET		001
140A	A225400454-500		. . LOUVER PRE VSB A2-254-25-130 used on 001A SEE SIL 21-105 FOR DET		001
-140B	A225400454-512		. . LOUVER used on 001B SEE SIL 21-105 FOR DET		001
-140C	A225400454-504		. . LOUVER used on 001C SEE SIL 21-105 FOR DET		001

- ITEM NOT ILLUSTRATED

FIG. ITEM	PART NUMBER	AIRLINE STOCK NUMBER	NOMENCLATURE 1234567	EFF CODE	UNITS PER ASSY
-140D	A225400454-522		. . LOUVER used on 001D SEE SIL 21-105 FOR DET		001
-140E	A225400454-530		. . LOUVER used on 001E SEE SIL 21-105 FOR DET		001
-140F	A225400454-532		. . LOUVER POST VSB A2-254-25-130 POST SB 25-1674 used on 001F, 001H, 001K SEE SIL 21-105 FOR DET		001
-140G	A225400454-524		. . LOUVER used on 001G SEE SIL 21-105 FOR DET		001
-140H	A225400454-534		. . LOUVER used on 001J		001
150A	A221201300-000		. . BRACKET-AIR EXTRACTION used on 001A, 001B, 001C, 001D, 001E, 001F, 001G, 001H, 001J, 001K		001
160A	NAS1102-08-8		. . SCREW used on 001A, 001B, 001C, 001D, 001E, 001F, 001G, 001H, 001J, 001K		003
170A	A321200304-200		. . TUBE-AIR EXTRACTION used on 001A, 001B, 001C, 001D, 001E, 001F, 001G, 001H, 001J, 001K		001
180A	ASNA0033-052		. . CLAMP used on 001A, 001B, 001C, 001D, 001E, 001F, 001G, 001H, 001J, 001K		002

- ITEM NOT ILLUSTRATED

FIG. ITEM	PART NUMBER	AIRLINE STOCK NUMBER	NOMENCLATURE 1234567	EFF CODE	UNITS PER ASSY
190A	D2127725521600		. . HOSE used on 001A, 001B, 001C, 001D, 001E, 001F, 001G, 001H, 001J, 001K		001
200A	NAS514P832-4		. . SCREW used on 001A, 001B, 001C, 001D, 001E, 001F, 001G, 001H, 001J, 001K		004
210A	A225400454-206		. . GRILLE used on 001A, 001B, 001C, 001D, 001E, 001F, 001G, 001H, 001J, 001K		001
220A	A225400454-204		. . FLEECE used on 001A, 001B, 001C, 001D, 001E, 001F, 001G, 001H, 001J, 001K		001
230A	NAS514P832-7		. . SCREW used on 001A, 001B, 001C, 001D, 001E, 001F, 001G, 001H, 001J, 001K		004
240A	A321200301-200		. . SEAL used on 001A, 001B, 001C, 001D, 001E, 001F, 001G, 001H, 001J, 001K		001

- ITEM NOT ILLUSTRATED

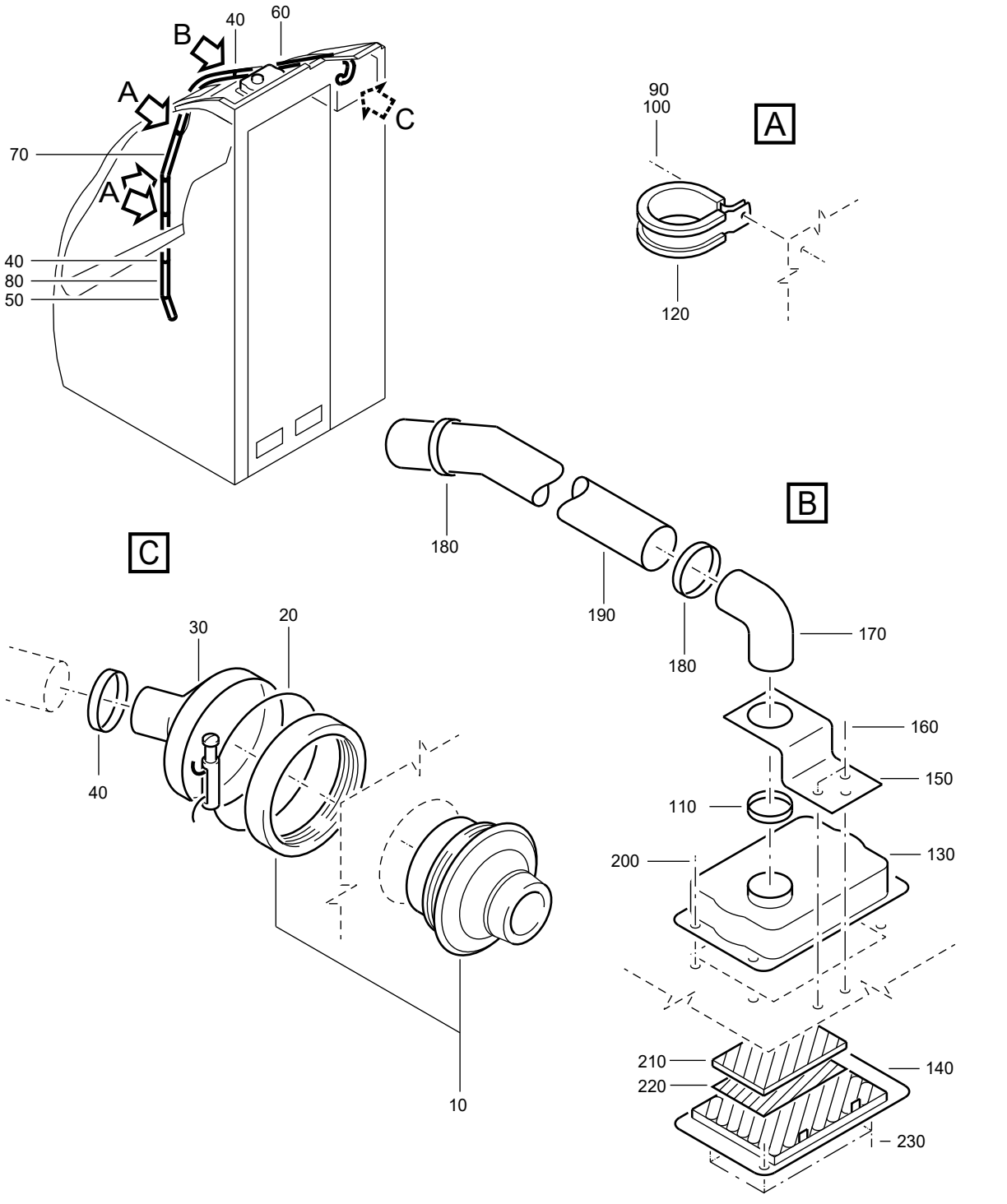

VENTILATION SYSTEM
Figure 21B/EN254151SHEET21B01

FIG. ITEM	PART NUMBER	AIRLINE STOCK NUMBER	NOMENCLATURE 1234567	EFF CODE	UNITS PER ASSY
21B -001A	D2549020802680		. VENTILATION SYSTEM NP PRE VSB A2-254-25-106 PRE VSB A2-254-25-130 used on 170F (25415101Y), 170C (25415141L), 170F (25415141N), 170C (25415141P), 170B (25415141R), 170A(25415141S), 170A (25415141T), 170A (25415141U), 170A(25415141V), 170A (25415141W), 170A (25415141X), 170A(25415141Y), 170A (25415141Z), 170C (254151420), 170A(25415142A), 170A (25415142B), 170A (25415142C), 170A(25415142D), 170B (25415142E), 170A (25415142F), 170A(25415142G), 170B (25415142H), 170A (25415142J), 170A(25415142K), 170A (25415142L), 170A (25415142M), 170A(25415142N), 170A (25415142P), 170A (25415142Q), 170C(25415142R), 170A (25415142S), 170A (25415142T), 170A(25415142U) SEE 25-41-51-01Y FOR NHA SEE 25-41-51-41L FOR NHA SEE 25-41-51-41N FOR NHA SEE 25-41-51-41P FOR NHA SEE 25-41-51-41R FOR NHA SEE 25-41-51-41S FOR NHA SEE 25-41-51-41T FOR NHA SEE 25-41-51-41U FOR NHA SEE 25-41-51-41V FOR NHA SEE 25-41-51-41W FOR NHA SEE 25-41-51-41X FOR NHA SEE 25-41-51-41Y FOR NHA SEE 25-41-51-41Z FOR NHA		RF

- ITEM NOT ILLUSTRATED

FIG. ITEM	PART NUMBER	AIRLINE STOCK NUMBER	NOMENCLATURE 1234567	EFF CODE	UNITS PER ASSY
			SEE 25-41-51-420 FOR NHA SEE 25-41-51-42A FOR NHA SEE 25-41-51-42B FOR NHA SEE 25-41-51-42C FOR NHA SEE 25-41-51-42D FOR NHA SEE 25-41-51-42E FOR NHA SEE 25-41-51-42F FOR NHA SEE 25-41-51-42G FOR NHA SEE 25-41-51-42H FOR NHA SEE 25-41-51-42J FOR NHA SEE 25-41-51-42K FOR NHA SEE 25-41-51-42L FOR NHA SEE 25-41-51-42M FOR NHA SEE 25-41-51-42N FOR NHA SEE 25-41-51-42P FOR NHA SEE 25-41-51-42Q FOR NHA SEE 25-41-51-42R FOR NHA SEE 25-41-51-42S FOR NHA SEE 25-41-51-42T FOR NHA SEE 25-41-51-42U FOR NHA		
-001B	D2549010610280		. VENTILATION SYSTEM NP used on 170E (25415141N), 170A (25415141R), 170D (254151420) SEE 25-41-51-41N FOR NHA SEE 25-41-51-41R FOR NHA SEE 25-41-51-420 FOR NHA		RF

- ITEM NOT ILLUSTRATED

FIG. ITEM	PART NUMBER	AIRLINE STOCK NUMBER	NOMENCLATURE 1234567	EFF CODE	UNITS PER ASSY
-001C	D2549030614680		. VENTILATION SYSTEM NP used on 170B (25415141P), 170B (25415141Z), 170B(25415142F), 170B (25415142G), 170A (25415142H), 170B(25415142N), 170B (25415142Q), 170A (25415142R), 170B(25415142S), 170B (25415142T), 170B (25415142U) SEE 25-41-51-41P FOR NHA SEE 25-41-51-41Z FOR NHA SEE 25-41-51-42F FOR NHA SEE 25-41-51-42G FOR NHA SEE 25-41-51-42H FOR NHA SEE 25-41-51-42N FOR NHA SEE 25-41-51-42Q FOR NHA SEE 25-41-51-42R FOR NHA SEE 25-41-51-42S FOR NHA SEE 25-41-51-42T FOR NHA SEE 25-41-51-42U FOR NHA		RF
-001D	D2549020510680		. VENTILATION SYSTEM NP used on 170C (25415141R), 170B (25415141V), 170B (25415141Y), 170A (25415142E), 170B (25415142K), 170C (25415142L), 170B (25415142R), 170C (25415142T) SEE 25-41-51-41R FOR NHA SEE 25-41-51-41V FOR NHA SEE 25-41-51-41Y FOR NHA SEE 25-41-51-42E FOR NHA SEE 25-41-51-42K FOR NHA SEE 25-41-51-42L FOR NHA SEE 25-41-51-42R FOR NHA SEE 25-41-51-42T FOR NHA		RF

- ITEM NOT ILLUSTRATED

FIG. ITEM	PART NUMBER	AIRLINE STOCK NUMBER	NOMENCLATURE 1234567		EFF CODE	UNITS PER ASSY
-001E	D2549020801080		. VENTILATION SYSTEM used on 170B (25415141T), 170D (25415141W), 170C(25415141X), 170A (254151420), 170C (25415142E) SEE 25-41-51-41T FOR NHA SEE 25-41-51-41W FOR NHA SEE 25-41-51-41X FOR NHA SEE 25-41-51-420 FOR NHA SEE 25-41-51-42E FOR NHA	NP		RF
-001F	D2549020809480		. VENTILATION SYSTEM used on 170B (25415141W), 170B (25415141X), 170B (254151420) SEE 25-41-51-41W FOR NHA SEE 25-41-51-41X FOR NHA SEE 25-41-51-420 FOR NHA	NP		RF
-001G	D2549010612080		. VENTILATION SYSTEM used on 170C (25415141W) SEE 25-41-51-41W FOR NHA	NP		RF
-001H	D2549030408280		. VENTILATION SYSTEM used on 170B (25415142D), 170B (25415142L), 170C (25415142S) SEE 25-41-51-42D FOR NHA SEE 25-41-51-42L FOR NHA SEE 25-41-51-42S FOR NHA	NP		RF
-001J	D2549030413480		. VENTILATION SYSTEM used on 170C (25415142N), 170D (25415142T) SEE 25-41-51-42N FOR NHA SEE 25-41-51-42T FOR NHA	NP		RF
-001K	D2549020411280		. VENTILATION SYSTEM used on 170C (25415142Q) SEE 25-41-51-42Q FOR NHA	NP		RF

- ITEM NOT ILLUSTRATED

FIG. ITEM	PART NUMBER	AIRLINE STOCK NUMBER	NOMENCLATURE 1234567		EFF CODE	UNITS PER ASSY
-001L	D2549030702080		. VENTILATION SYSTEM used on 170D (25415142R) SEE 25-41-51-42R FOR NHA	NP		RF
-001M	R22540166200080		. VENTILATION SYSTEM POST VSB A2-254-25-106 170B (25415142C), 170C (25415142G), 170D (25415142L), 170E (25415142T) SEE 25-41-51-042C FOR NHA SEE 25-41-51-042G FOR NHA SEE 25-41-51-042L FOR NHA SEE 25-41-51-042T FOR NHA	NP		RF
-001N	R22540119605280		. VENTILATION SYSTEM POST VSB A2-254-25-130 used on 170D (25415141R), 170F (25415141W), 170D (25415141X), 170E (254151420), 170D (25415142E), 170B (25415142J), 170B (25415142P) SEE 25-41-51-41R FOR NHA SEE 25-41-51-41W FOR NHA SEE 25-41-51-41X FOR NHA SEE 25-41-51-420 FOR NHA SEE 25-41-51-42E FOR NHA SEE 25-41-51-42J FOR NHA SEE 25-41-51-42P FOR NHA	NP		RF
010A	2966-01		. . OUTLET-AIR,INDIVIDUAL used on 001A, 001B, 001C, 001D, 001E, 001F, 001G, 001H, 001J, 001K, 001L, 001M, 001N			001
020A	9HV408882-00		. . CLAMP used on 001A, 001B, 001C, 001D, 001E, 001F, 001G, 001H, 001J, 001K, 001L, 001M, 001N			001

- ITEM NOT ILLUSTRATED

FIG. ITEM	PART NUMBER	AIRLINE STOCK NUMBER	NOMENCLATURE 1234567	EFF CODE	UNITS PER ASSY
030A	A2157036420000		. . CAP used on 001A, 001B, 001C, 001D, 001E, 001F, 001G, 001H, 001J, 001K, 001L, 001M, 001N		001
040A	ASNA0033-036		. . CLAMP used on 001A, 001B, 001C, 001D, 001E, 001F, 001G, 001H, 001J, 001K, 001L, 001M, 001N		003
050A	ASNA0033-036		. . CLAMP used on 001A, 001B, 001C, 001D, 001E, 001F, 001G, 001H, 001J, 001K, 001L, 001M, 001N		001
060A	A2127053420800		. . HOSE used on 001A, 001B, 001C, 001D, 001E, 001F, 001G, 001H, 001J, 001K, 001L, 001M, 001N		001
070A	A221201000-000		. . TUBE used on 001A, 001B, 001C, 001D, 001E, 001F, 001G, 001H, 001J, 001K, 001L, 001M, 001N		001
080A	A2127053421600		. . HOSE used on 001A, 001B, 001C, 001D, 001E, 001F, 001G, 001H, 001J, 001K, 001L, 001M, 001N		001
090A	NAS1096-2-5		. . SCREW BUY PN NAS1801-08-5 used on 001A, 001B, 001C, 001D, 001E, 001F, 001G, 001H, 001J, 001K, 001L, 001M, 001N		003
100A	ASNA0113-48ADL		. . WASHER used on 001A, 001B, 001C, 001D, 001E, 001F, 001G, 001H, 001J, 001K, 001L, 001M, 001N		003

- ITEM NOT ILLUSTRATED

FIG. ITEM	PART NUMBER	AIRLINE STOCK NUMBER	NOMENCLATURE 1234567	EFF CODE	UNITS PER ASSY
110A	A321200301-200		. . SEAL used on 001A, 001B, 001C, 001D, 001E, 001F, 001G, 001H, 001J, 001K, 001L, 001M, 001N		001
120A	MS21919WCH16		. . CLAMP BUY PN AS21919WCH16 used on 001A, 001B, 001C, 001D, 001E, 001F, 001G, 001H, 001J, 001K, 001L, 001M, 001N		003
130A	A321200303-212		. . HOOD-AIR EXTRACTION used on 001A, 001B, 001C, 001D, 001E, 001F, 001G, 001H, 001J, 001K, 001L, 001M, 001N SEE SIL 21-105 FOR DET		001
140A	A225400454-500		. . LOUVER PRE VSB A2-254-25-106 PRE VSB A2-254-25-130 used on 001A SEE SIL 21-105 FOR DET		001
-140B	A225400454-504		. . LOUVER used on 001B		001
-140C	A225400454-532		. . LOUVER POST VSB A2-254-25-130 used on 001C, 001N		001
-140D	A225400454-534		. . LOUVER used on 001D		001
-140E	A225400454-512		. . LOUVER used on 001E		001
-140F	A225400454-524		. . LOUVER used on 001F		001
-140G	A225400454-522		. . LOUVER used on 001G		001

- ITEM NOT ILLUSTRATED

FIG. ITEM	PART NUMBER	AIRLINE STOCK NUMBER	NOMENCLATURE 1234567	EFF CODE	UNITS PER ASSY
-140H	A225400454-586		. . LOUVER used on 001H		001
-140J	A225400454-538		. . LOUVER used on 001J		001
-140K	A225400454-540		. . LOUVER used on 001K		001
-140L	A225400454-542		. . LOUVER used on 001L		001
-140M	A225400454-594		. . LOUVER POST VSB A2-254-25-106 used on 001M		001
150A	A221201300-000		. . BRACKET-AIR EXTRACTION used on 001A, 001B, 001C, 001D, 001E, 001F, 001G, 001H, 001J, 001K, 001L, 001M, 001N		001
160A	NAS1102-08-8		. . SCREW used on 001A, 001B, 001C, 001D, 001E, 001F, 001G, 001H, 001J, 001K, 001L, 001M, 001N		003
170A	A321200304-200		. . TUBE-AIR EXTRACTION used on 001A, 001B, 001C, 001D, 001E, 001F, 001G, 001H, 001J, 001K, 001L, 001M, 001N		001
180A	ASNA0033-052		. . CLAMP used on 001A, 001B, 001C, 001D, 001E, 001F, 001G, 001H, 001J, 001K, 001L, 001M, 001N		002
190A	D2127725521600		. . HOSE used on 001A, 001B, 001C, 001D, 001E, 001F, 001G, 001H, 001J, 001K, 001L, 001M, 001N		001

- ITEM NOT ILLUSTRATED

FIG. ITEM	PART NUMBER	AIRLINE STOCK NUMBER	NOMENCLATURE 1234567	EFF CODE	UNITS PER ASSY
200A	NAS514P832-4		. . SCREW used on 001A, 001B, 001C, 001D, 001E, 001F, 001G, 001H, 001J, 001K, 001L, 001M, 001N		004
210A	A225400454-206		. . GRILLE used on 001A, 001B, 001C, 001D, 001E, 001F, 001G, 001H, 001J, 001K, 001L, 001M, 001N		001
220A	A225400454-204		. . FLEECE used on 001A, 001B, 001C, 001D, 001E, 001F, 001G, 001H, 001J, 001K, 001L, 001M, 001N		001
230A	NAS514P832-7		. . SCREW used on 001A, 001B, 001C, 001D, 001E, 001F, 001G, 001H, 001J, 001K, 001L, 001M, 001N		004

- ITEM NOT ILLUSTRATED

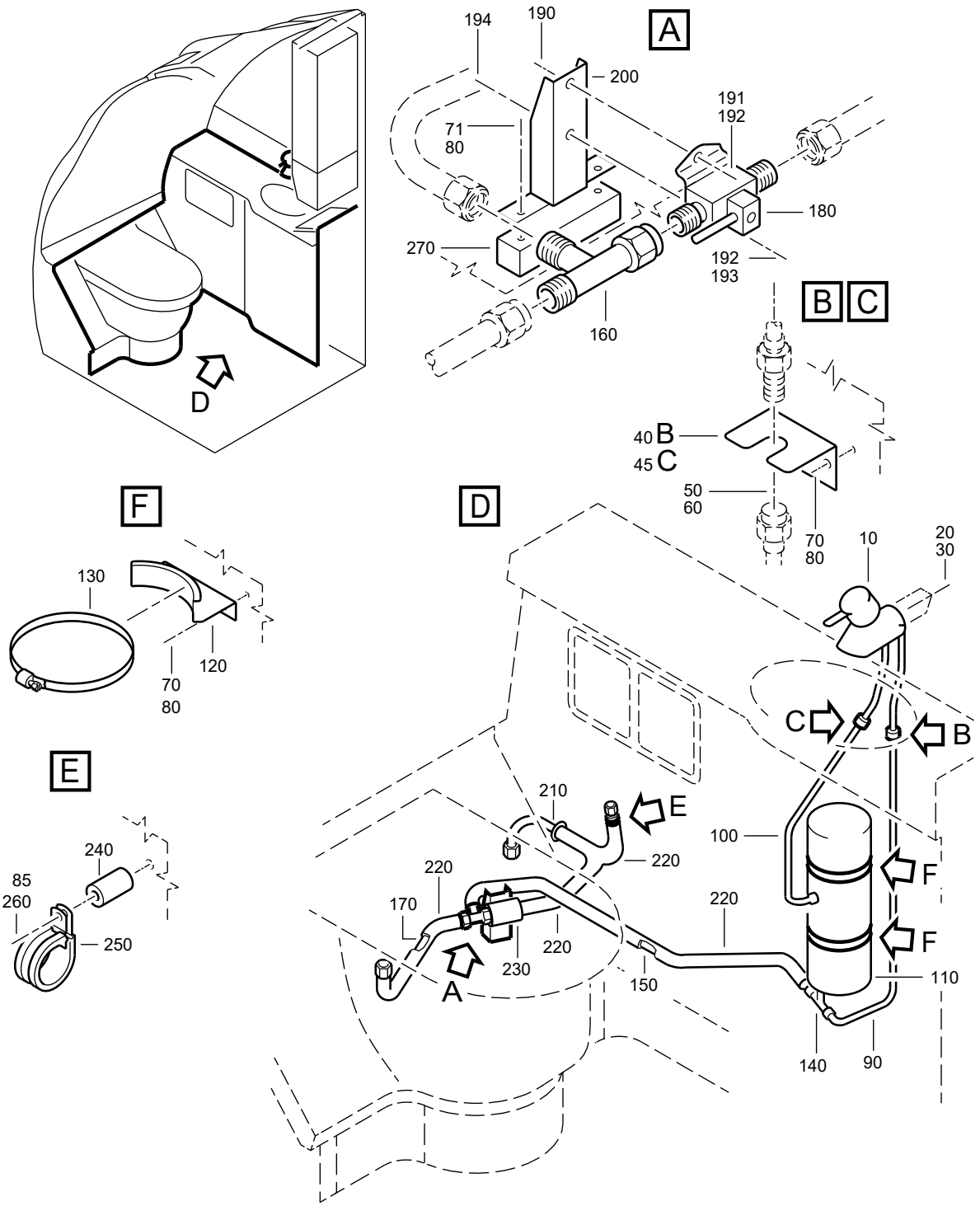

F_PL_254151_22_0_01_01

FIG. ITEM	PART NUMBER	AIRLINE STOCK NUMBER	NOMENCLATURE 1234567	EFF CODE	UNITS PER ASSY
22					
-001A	D2549010500081		. WATER SYSTEM-POTABLE NP used on 180A (254151010), 180B (25415101A), 180D(25415141T) SEE 25-41-51-010 FOR NHA SEE 25-41-51-01A FOR NHA SEE 25-41-51-41T FOR NHA		RF
-001B	D2549010501081		. WATER SYSTEM-POTABLE NP used on 180D (254151010), 180A (25415101A), 180C(25415101B), 180C (25415141T) SEE 25-41-51-010 FOR NHA SEE 25-41-51-01A FOR NHA SEE 25-41-51-01B FOR NHA SEE 25-41-51-41T FOR NHA		RF

- ITEM NOT ILLUSTRATED

FIG. ITEM	PART NUMBER	AIRLINE STOCK NUMBER	NOMENCLATURE 1234567	EFF CODE	UNITS PER ASSY
-001C	D2549010501881		. WATER SYSTEM-POTABLE NP PRE VSB A2-254-25-013 PRE VSB A2-254-25-032 PRE VSB A2-254-25-059 used on 180C (254151010), 180D (25415101A), 180A(25415101B), 180A (25415101C), 180B (25415101D), 180A(25415101E), 180A (25415101F), 180B (25415101G), 180A(25415101H), 180B (25415101J), 180D (25415101K), 180B(25415101L), 180D (25415101M), 180B (25415101N), 180D(254151410) SEE 25-41-51-010 FOR NHA SEE 25-41-51-01A FOR NHA SEE 25-41-51-01B FOR NHA SEE 25-41-51-01C FOR NHA SEE 25-41-51-01D FOR NHA SEE 25-41-51-01E FOR NHA SEE 25-41-51-01F FOR NHA SEE 25-41-51-01G FOR NHA SEE 25-41-51-01H FOR NHA SEE 25-41-51-01J FOR NHA SEE 25-41-51-01K FOR NHA SEE 25-41-51-01L FOR NHA SEE 25-41-51-01M FOR NHA SEE 25-41-51-01N FOR NHA SEE 25-41-51-410 FOR NHA		RF
-001D	D2549030500881		. WATER SYSTEM-POTABLE NP used on 180E (25415101A), 180B (25415101C), 180A(25415101D), 180C (25415101G), 180C (25415101H) SEE 25-41-51-01A FOR NHA SEE 25-41-51-01C FOR NHA SEE 25-41-51-01D FOR NHA SEE 25-41-51-01G FOR NHA SEE 25-41-51-01H FOR NHA		RF

- ITEM NOT ILLUSTRATED

FIG. ITEM	PART NUMBER	AIRLINE STOCK NUMBER	NOMENCLATURE 1234567		EFF CODE	UNITS PER ASSY
-001E	D2549010506881		. WATER SYSTEM-POTABLE used on 180D (25415101H), 180C (25415101K), 180B (25415141B) SEE 25-41-51-01H FOR NHA SEE 25-41-51-01K FOR NHA SEE 25-41-51-41B FOR NHA	NP		RF
-001F	D2549010501881		. WATER SYSTEM-POTABLE used on 180C (25415101E), 180D (25415101F) SEE 25-41-51-01E FOR NHA SEE 25-41-51-01F FOR NHA	NP		RF
-001G	D2549010501881		. WATER SYSTEM-POTABLE POST VSB A2-254-25-013 used on 180C (25415101C), 180E (25415101H) SEE 25-41-51-01C FOR NHA SEE 25-41-51-01H FOR NHA	NP		RF
-001H	D2549010501881		. WATER SYSTEM-POTABLE POST VSB A2-254-25-032 used on 180F (25415101H), 180C (25415101L) SEE 25-41-51-01H FOR NHA	NP		RF
-001J	R22540113300081		. WATER SYSTEM-POTABLE POST VSB A2-254-25-059 used on 180E (25415101F) SEE 25-41-51-01F FOR NHA	NP		RF
010A	2980192100000		. . FAUCET-WATER PRE VSB A2-254-25-013 PRE VSB A2-254-25-032 used on 001A, 001B, 001C, 001D, 001E, 001F, 001J			001

- ITEM NOT ILLUSTRATED

FIG. ITEM	PART NUMBER	AIRLINE STOCK NUMBER	NOMENCLATURE 1234567	EFF CODE	UNITS PER ASSY
-010B	2980332100000		. . FAUCET-WATER POST VSB A2-254-25-013 POST VSB A2-254-25-032 used on 001G, 001H		001
020A	AN960C416L		. . WASHER BUY PN NAS1149C0432R used on 001A, 001B, 001C, 001D, 001E, 001F, 001G, 001H, 001J		003
030A	MS21042-4		. . NUT used on 001A, 001B, 001C, 001D, 001E, 001F, 001G, 001H, 001J		003
040A	A238100302-200		. . ANGLE-WATER FAUCET PRE VSB A2-254-25-032 used on 001A, 001B, 001C, 001D, 001E, 001F, 001J		001
045A	A238100302-202		. . ANGLE-WATER FAUCET POST SB 38-1055 used on 001E		001
-045B	A238100302-200		. . ANGLE-WATER FAUCET PRE VSB A2-254-25-032 used on 001A, 001B, 001C, 001D, 001F, 001J		001
050A	AN960C916L		. . WASHER BUY PN NAS1149C0932R used on 001A, 001B, 001C, 001D, 001E, 001F, 001H, 001J		002
060A	AN924-6J		. . NUT used on 001A, 001B, 001C, 001D, 001E, 001F, 001H, 001J		002

- ITEM NOT ILLUSTRATED

FIG. ITEM	PART NUMBER	AIRLINE STOCK NUMBER	NOMENCLATURE 1234567	EFF CODE	UNITS PER ASSY
070A	NAS1096-2-6		. . SCREW POST SB 38-1055 BUY PN NAS1801-08-6 used on 001A, 001B, 001C, 001D, 001E, 001F, 001H, 001J		008
071A	NAS1096-2-4		. . SCREW PRE VSB A2-254-25-059 BUY PN NAS1801-08-4 used on 001A, 001B, 001C, 001E, 001F, 001H		002
-071B	NAS1096-2-21		. . SCREW BUY PN NAS1801-08-21 used on 001D		002
-071C	NAS1801-08-21		. . SCREW POST VSB A2-254-25-059 used on 001J		002
080A	NAS1149CN832R		. . WASHER POST SB 38-1055 used on 001A, 001B, 001C, 001D, 001E, 001F, 001H, 001J		010
085A	NAS1149CN832R		. . WASHER used on 001A, 001B, 001C, 001D, 001E, 001F, 001H, 001J		001
-086A	MS21919WCH7		. . CLAMP POST VSB A2-254-25-013 POST VSB A2-254-25-032 used on 001G, 001H		003
-087A	NAS1801-08-16		. . SCREW POST VSB A2-254-25-032 used on 001G, 001H		001

- ITEM NOT ILLUSTRATED

FIG. ITEM	PART NUMBER	AIRLINE STOCK NUMBER	NOMENCLATURE 1234567	EFF CODE	UNITS PER ASSY
-088A	NAS1801-08-14		. . SCREW POST VSB A2-254-25-032 used on 001G, 001H		001
-089A	NAS1149CN832R		. . WASHER POST VSB A2-254-25-032 used on 001G, 001H		001
090A	A238100001-000		. . TUBE used on 001A, 001B		001
-090B	A238100009-000		. . TUBE PRE VSB A2-254-25-032 used on 001C, 001D, 001E, 001F, 001J		001
-092A	NSA5527-03-02		. . SPACER POST VSB A2-254-25-032 used on 001G, 001H		002
100A	AE3663630G0116		. . HOSE used on 001A, 001B		001
-100B	AE3663630G0113		. . HOSE PRE VSB A2-254-25-032 used on 001C, 001D, 001E, 001F, 001J		001
-105A	NAS1762J0606		. . ELBOW POST VSB A2-254-25-013 POST VSB A2-254-25-032 used on 001G, 001H		001
110A	24E507009G03		. . HEATER-WATER used on 001A, 001B, 001C, 001D, 001E, 001F, 001G, 001H, 001J		001

- ITEM NOT ILLUSTRATED

FIG. ITEM	PART NUMBER	AIRLINE STOCK NUMBER	NOMENCLATURE 1234567	EFF CODE	UNITS PER ASSY
-110B	24E508198G01		. . HEATER-WATER used on 001A, 001B, 001C, 001D, 001E, 001F, 001G, 001H		001
120A	A238100301-200		. . BRACKET used on 001A, 001B, 001C, 001D, 001E, 001F, 001G, 001H, 001J		002
130A	ASNA0032-112		. . CLAMP used on 001A, 001B, 001C, 001D, 001E, 001F, 001G, 001H, 001J		002
140A	NAS1764J080606		. . TEE used on 001A, 001B, 001C, 001D, 001E, 001F, 001G, 001H, 001J		001
150A	A238101000-000		. . TUBE used on 001A, 001B		001
-150B	A238101004-000		. . TUBE PRE VSB A2-254-25-059 used on 001C, 001E, 001G, 001H		001
-150C	A238101006-000		. . TUBE POST VSB A2-254-25-059 used on 001D, 001F, 001J		001
160A	NAS1763J080808		. . TEE used on 001A, 001B, 001C, 001D, 001E, 001F, 001G, 001H, 001J		001
170A	AE3663630H0092		. . HOSE used on 001A, 001B, 001C, 001D, 001E, 001F, 001G, 001H, 001J		001

- ITEM NOT ILLUSTRATED

FIG. ITEM	PART NUMBER	AIRLINE STOCK NUMBER	NOMENCLATURE 1234567	EFF CODE	UNITS PER ASSY
180A	Z02HV08-1		. . VALVE-SHUTOFF used on 001A, 001B, 001C, 001D, 001E, 001F, 001G, 001H, 001J		001
190A	MS21042-3		. . NUT used on 001A, 001B, 001C, 001D, 001E, 001F, 001G, 001H, 001J		001
191A	NAS1096-3-6		. . SCREW BUY PN NAS1801-3-6 used on 001A, 001B, 001C, 001D, 001E, 001F, 001G, 001H, 001J		001
192A	AN960C10L		. . WASHER BUY PN NAS1149C0332R used on 001A, 001B, 001C, 001D, 001E, 001F, 001G, 001H, 001J		002
193A	NAS1096-3-16		. . SCREW BUY PN NAS1801-3-16 used on 001A, 001B, 001C, 001D, 001E, 001F, 001G, 001H, 001J		001
194A	NAS509-3		. . NUT used on 001A, 001B, 001C, 001D, 001E, 001F, 001G, 001H, 001J		001
200A	A338100302-200		. . BRACKET used on 001A, 001B, 001C, 001D, 001E, 001F, 001G, 001H, 001J		001

- ITEM NOT ILLUSTRATED

FIG. ITEM	PART NUMBER	AIRLINE STOCK NUMBER	NOMENCLATURE 1234567	EFF CODE	UNITS PER ASSY
210A	A238101001-000		. . TUBE PRE VSB A2-254-25-059 used on 001A, 001B, 001C, 001E, 001F, 001G, 001H		001
-210B	A238101007-004		. . TUBE POST VSB A2-254-25-059 used on 001D, 001J		001
220A	ABS0616-1-08		. . INSULATION BUY PN ABS0616-1-08A used on 001D		003
-220B	ABS0616A1-08A		. . INSULATION POST VSB A2-254-25-059 used on 001F, 001J		003
230A	ABS0619-08-01		. . INSULATION used on 001D		001
-230B	ABS0619A08C01		. . INSULATION POST VSB A2-254-25-059 used on 001F, 001J		001
240A	NSA5527-03-02		. . SPACER POST VSB A2-254-25-059 used on 001D, 001F, 001J		001
-242A	NSA5527-03-06		. . SPACER POST VSB A2-254-25-059 used on 001J		001
250A	MS21919WCH8		. . CLAMP POST VSB A2-254-25-059 BUY PN AS21919WCH08 used on 001D, 001F, 001J		001
260A	NAS1801-08-24		. . SCREW used on 001D, 001F		001

- ITEM NOT ILLUSTRATED

FIG. ITEM	PART NUMBER	AIRLINE STOCK NUMBER	NOMENCLATURE 1234567	EFF CODE	UNITS PER ASSY
-260B	NAS1801-08-22		. . SCREW POST VSB A2-254-25-059 used on 001J		001
270A	A238101302-200		. . SPACER POST VSB A2-254-25-059 used on 001D, 001J		001
-280A	ABS5662B01		. . TAPE-ADHESIVE POST VSB A2-254-25-059 USE AS REQUIRED used on 001F, 001J		AR

- ITEM NOT ILLUSTRATED

THIS PAGE IS INTENTIONALLY LEFT BLANK

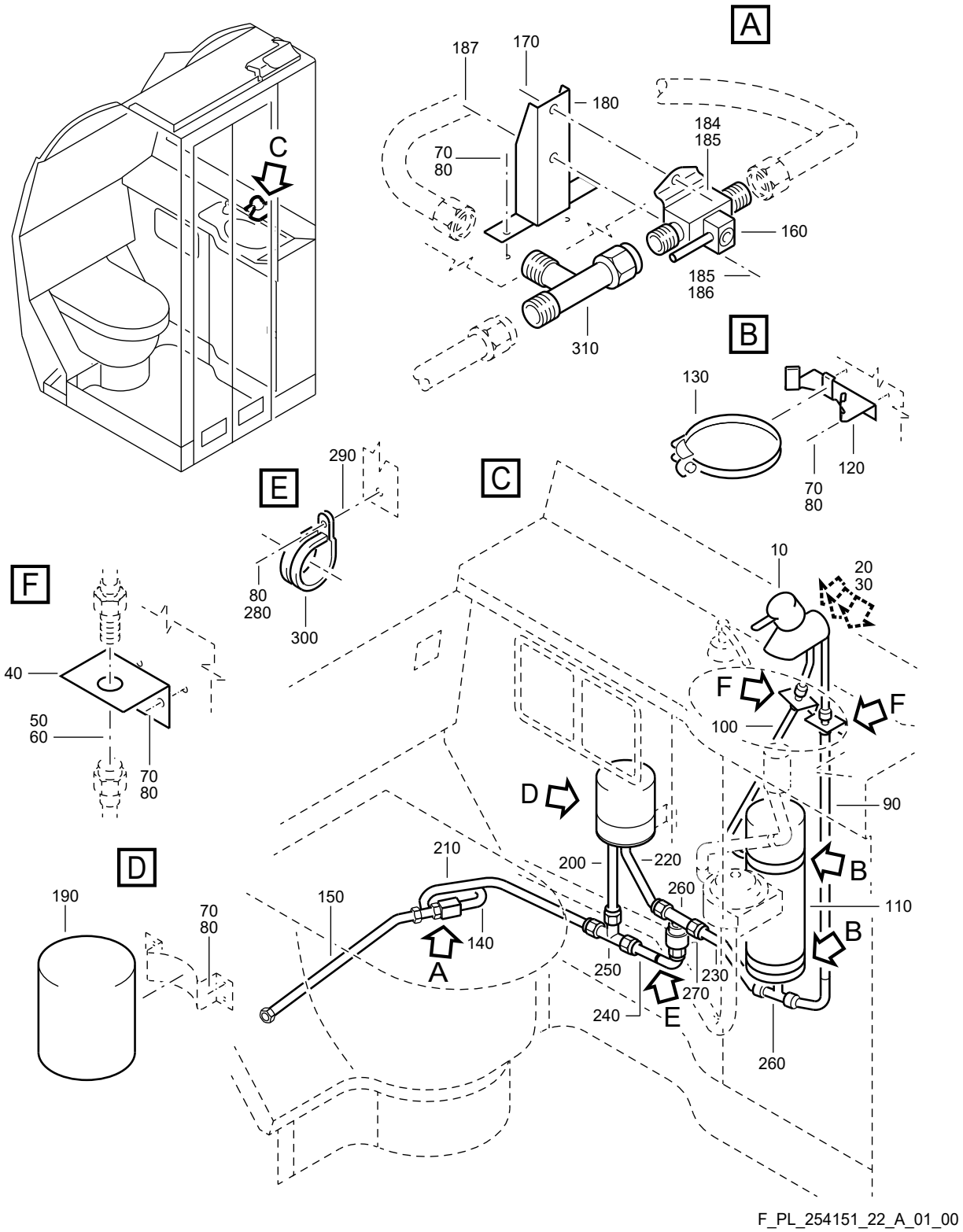

WATER SYSTEM-POTABLE
Figure 22A/EN254151SHEET22A01

FIG. ITEM	PART NUMBER	AIRLINE STOCK NUMBER	NOMENCLATURE 1234567	EFF CODE	UNITS PER ASSY
22A					
-001A	D2549020500081		. WATER SYSTEM-POTABLE NP used on 180B (254151010), 180C (25415101A), 180B(25415101B), 180B (25415101E), 180C (25415101F) SEE 25-41-51-010 FOR NHA SEE 25-41-51-01A FOR NHA SEE 25-41-51-01B FOR NHA SEE 25-41-51-01E FOR NHA SEE 25-41-51-01F FOR NHA		RF
-001B	D2549030501881		. WATER SYSTEM-POTABLE NP used on 180C (25415101D), 180B (25415101F) SEE 25-41-51-01D FOR NHA SEE 25-41-51-01F FOR NHA		RF
010A	2980192100000		. . FAUCET-WATER used on 001A, 001B		001
020A	AN960C416L		. . WASHER BUY PN NAS1149C0432R used on 001A, 001B		003
030A	MS21042-4		. . NUT used on 001A, 001B		003
040A	A238100302-200		. . ANGLE-WATER FAUCET used on 001A, 001B		002
050A	AN960C916L		. . WASHER BUY PN NAS1149C0932R used on 001A, 001B		002
060A	AN924-6J		. . NUT used on 001A, 001B		002

- ITEM NOT ILLUSTRATED

FIG. ITEM	PART NUMBER	AIRLINE STOCK NUMBER	NOMENCLATURE 1234567	EFF CODE	UNITS PER ASSY
070A	NAS1096-2-6		. . SCREW USE AS REQUIRED USAGE RANGE FROM 9 TO 10 BUY PN NAS1801-08-6 used on 001A, 001B		AR
080A	AN960C8		. . WASHER USE AS REQUIRED USAGE RANGE FROM 9 TO 10 BUY PN NAS1149CN832R used on 001A, 001B		AR
090A	A238100009-000		. . TUBE used on 001A, 001B		001
100A	AE3663630G0113		. . HOSE used on 001A, 001B		001
110A	24E507009G03		. . HEATER-WATER used on 001A, 001B		001
120A	A238100301-200		. . BRACKET used on 001A, 001B		002
130A	ASNA0032-112		. . CLAMP used on 001A, 001B		002
140A	A238101001-000		. . TUBE used on 001A, 001B		001
150A	AE3663630H0092		. . HOSE used on 001A, 001B		001
160A	Z02HV08-1		. . VALVE-SHUTOFF used on 001A, 001B		001
170A	MS21042-3		. . NUT used on 001A, 001B		001

- ITEM NOT ILLUSTRATED

FIG. ITEM	PART NUMBER	AIRLINE STOCK NUMBER	NOMENCLATURE 1234567	EFF CODE	UNITS PER ASSY
180A	A338100302-200		. . BRACKET used on 001A, 001B		001
184A	NAS1096-3-6		. . SCREW BUY PN NAS1801-3-6 used on 001A, 001B		001
185A	AN960C10L		. . WASHER USE AS REQUIRED USAGE RANGE FROM 1 TO 2 BUY PN NAS1149C0332R used on 001A, 001B		AR
186A	NAS1096-3-16		. . SCREW BUY PN NAS1801-3-16 used on 001A, 001B		001
187A	NAS509-3		. . NUT used on 001A, 001B		001
190A	770027		. . FILTER ASSY-DRINKING WATER used on 001A		001
-190B	770107		. . FILTER ASSY-WATER, DRINKING used on 001B		001
200A	A238100005-000		. . TUBE used on 001A, 001B		001
210A	A238101003-000		. . TUBE used on 001A, 001B		001
220A	A238100004-000		. . TUBE used on 001A, 001B		001
230A	A238100007-000		. . TUBE used on 001A, 001B		001

- ITEM NOT ILLUSTRATED

FIG. ITEM	PART NUMBER	AIRLINE STOCK NUMBER	NOMENCLATURE 1234567	EFF CODE	UNITS PER ASSY
240A	A238100006-000		. . TUBE used on 001A, 001B		001
250A	NAS1764J080806		. . TEE used on 001A, 001B		001
260A	NAS1764J060606		. . TEE used on 001A, 001B		002
270A	HTE400179		. . VALVE-NONRETURN used on 001A, 001B		001
280A	NAS1096-2-16		. . SCREW BUY PN NAS1801-08-16 used on 001A, 001B		002
290A	NSA5527-03-02		. . SPACER used on 001A, 001B		001
300A	MS21919WCH16		. . CLAMP BUY PN AS21919WCH16 used on 001A, 001B		001
310A	NAS1763J080808		. . TEE used on 001A, 001B		001

- ITEM NOT ILLUSTRATED

THIS PAGE IS INTENTIONALLY LEFT BLANK

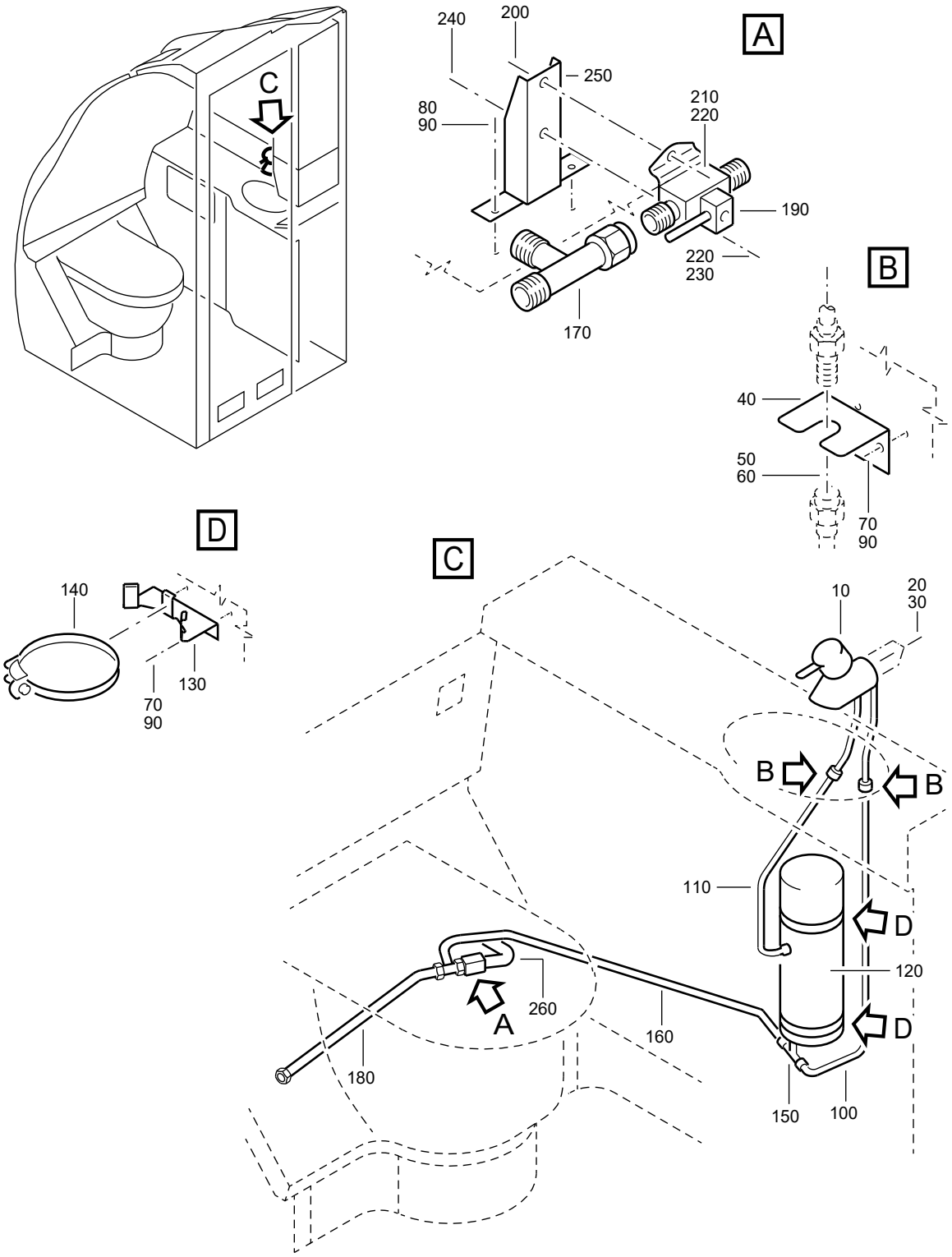

F_PL_254151_22_B_01_00

WATER SYSTEM-POTABLE
Figure 22B/EN254151SHEET22B01

FIG. ITEM	PART NUMBER	AIRLINE STOCK NUMBER	NOMENCLATURE 1234567	EFF CODE	UNITS PER ASSY
22B					
-001A	D2549020603681		. WATER SYSTEM-POTABLE NP used on 180B (25415101H) SEE 25-41-51-01H FOR NHA		RF
010A	2980192100000		. . FAUCET-WATER used on 001A		001
020A	NAS1149C0432R		. . WASHER used on 001A		003
030A	MS21042-4		. . NUT used on 001A		003
040A	A238100302-200		. . ANGLE-WATER FAUCET used on 001A		002
050A	NAS1149C0932R		. . WASHER used on 001A		002
060A	AN924-6J		. . NUT used on 001A		002
070A	NAS1096-2-6		. . SCREW BUY PN NAS1801-08-6 used on 001A		008
080A	NAS1096-2-4		. . SCREW BUY PN NAS1801-08-4 used on 001A		002
090A	NAS1149CN832R		. . WASHER used on 001A		006
100A	A238100009-000		. . TUBE used on 001A		001
110A	AE3663630G0113		. . HOSE used on 001A		001

- ITEM NOT ILLUSTRATED

FIG. ITEM	PART NUMBER	AIRLINE STOCK NUMBER	NOMENCLATURE 1234567	EFF CODE	UNITS PER ASSY
120A	24E507009G03		. . HEATER-WATER used on 001A		001
130A	A238100301-200		. . BRACKET used on 001A		002
140A	ASNA0032-112		. . CLAMP used on 001A		002
150A	NAS1764J080606		. . TEE used on 001A		001
160A	A238101004-000		. . TUBE used on 001A		001
170A	NAS1763J080808		. . TEE used on 001A		001
180A	AE3663630H0092		. . HOSE used on 001A		001
190A	Z02HV08-1		. . VALVE-SHUTOFF used on 001A		001
200A	MS21042-3		. . NUT used on 001A		001
210A	NAS1096-3-6		. . SCREW BUY PN NAS1801-3-6 used on 001A		001
220A	NAS1149C0332R		. . WASHER used on 001A		002
230A	NAS1096-3-16		. . SCREW BUY PN NAS1801-3-16 used on 001A		001
240A	NAS509-3		. . NUT used on 001A		001

- ITEM NOT ILLUSTRATED

FIG. ITEM	PART NUMBER	AIRLINE STOCK NUMBER	NOMENCLATURE 1234567	EFF CODE	UNITS PER ASSY
250A	A338100302-200		. . BRACKET used on 001A		001
260A	A238101001-000		. . TUBE used on 001A		001

- ITEM NOT ILLUSTRATED

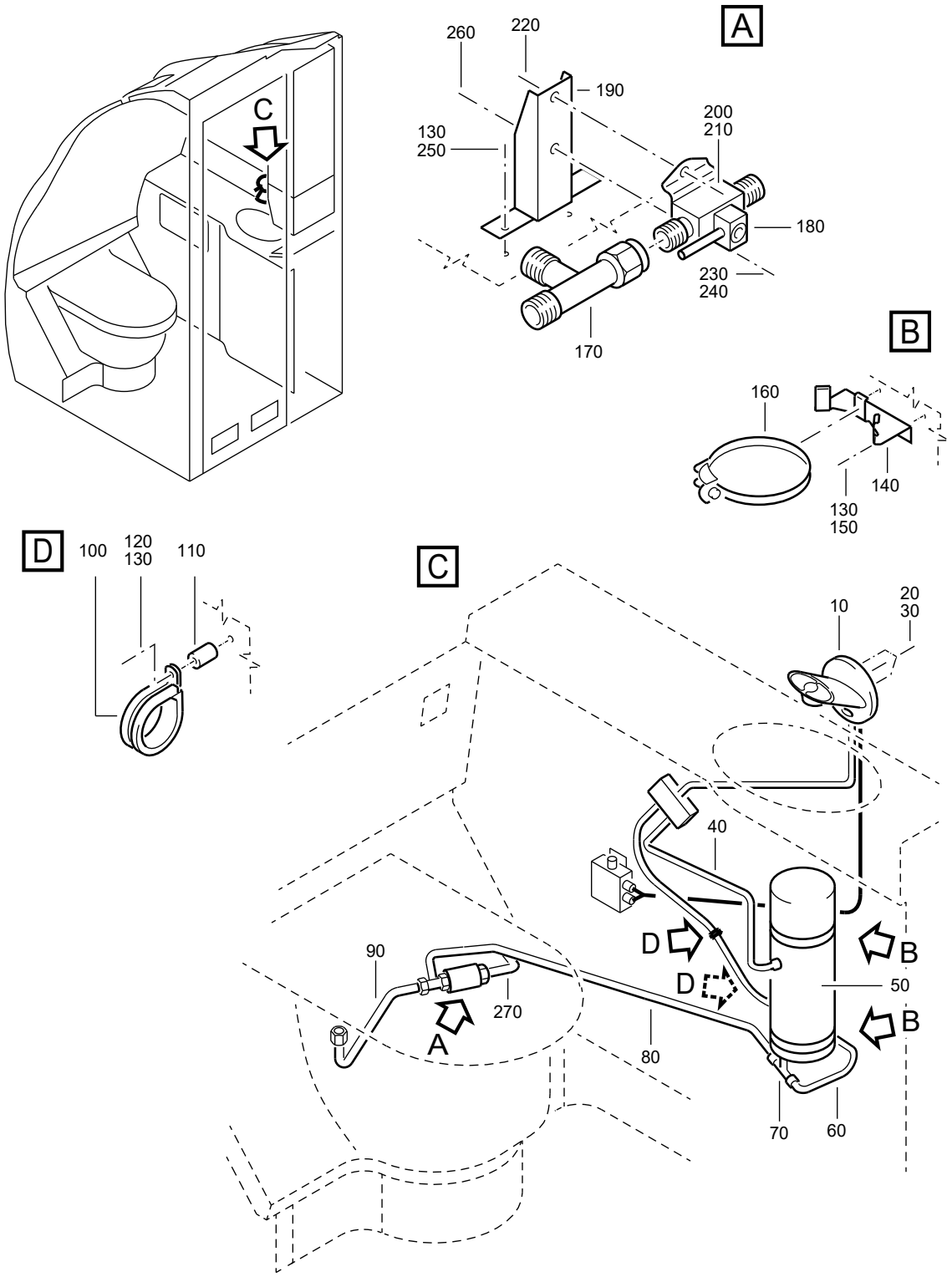

F_PL_254151_22_C_01_00

WATER SYSTEM-POTABLE
Figure 22C/EN254151SHEET22C01

FIG. ITEM	PART NUMBER	AIRLINE STOCK NUMBER	NOMENCLATURE 1234567	EFF CODE	UNITS PER ASSY
22C					
-001A	D2549010508081		. WATER SYSTEM-POTABLE NP used on 180A (25415101G) SEE 25-41-51-01G FOR NHA		RF
010A	AR9840-3W31D544		. . FAUCET ASSY-INFRARED used on 001A		001
020A	NAS1149C0432R		. . WASHER used on 001A		003
030A	MS21042-4		. . NUT used on 001A		003
040A	AE6471G0133-079		. . HOSE used on 001A		001
050A	24E507009G03		. . HEATER-WATER used on 001A		001
060A	AE6471G0221-210		. . HOSE used on 001A		001
070A	NAS1764J080606		. . TEE used on 001A		001
080A	A238101004-000		. . TUBE used on 001A		001
090A	AE3663630H0092		. . HOSE used on 001A		001
100A	MS21919WCH8		. . CLAMP BUY PN AS21919WCH08 used on 001A		002
110A	NSA5527-03-02		. . SPACER used on 001A		002

- ITEM NOT ILLUSTRATED

FIG. ITEM	PART NUMBER	AIRLINE STOCK NUMBER	NOMENCLATURE 1234567	EFF CODE	UNITS PER ASSY
120A	NAS1096-2-12		. . SCREW BUY PN NAS1801-08-12 used on 001A		002
130A	NAS1149CN832R		. . WASHER used on 001A		008
140A	A238100301-200		. . BRACKET used on 001A		002
150A	NAS1096-2-6		. . SCREW BUY PN NAS1801-08-6 used on 001A		004
160A	ASNA0032-112		. . CLAMP used on 001A		002
170A	NAS1763J080808		. . TEE used on 001A		001
180A	Z02HV08-1		. . VALVE-SHUTOFF used on 001A		001
190A	A238100303-200		. . BRACKET-SHUTOFF COCK used on 001A		001
200A	NAS1096-3-16		. . SCREW BUY PN NAS1801-3-16 used on 001A		001
210A	ASNA0113-48ADL		. . WASHER used on 001A		001
220A	NAS509-3		. . NUT used on 001A		001
230A	NAS1096-3-6		. . SCREW BUY PN NAS1801-3-6 used on 001A		001
240A	NAS1149C0332R		. . WASHER used on 001A		001

- ITEM NOT ILLUSTRATED

FIG. ITEM	PART NUMBER	AIRLINE STOCK NUMBER	NOMENCLATURE 1234567	EFF CODE	UNITS PER ASSY
250A	NAS1096-2-4		. . SCREW BUY PN NAS1801-08-4 used on 001A		002
260A	MS21042-3		. . NUT used on 001A		001
270A	A238101001-000		. . TUBE used on 001A		001

- ITEM NOT ILLUSTRATED

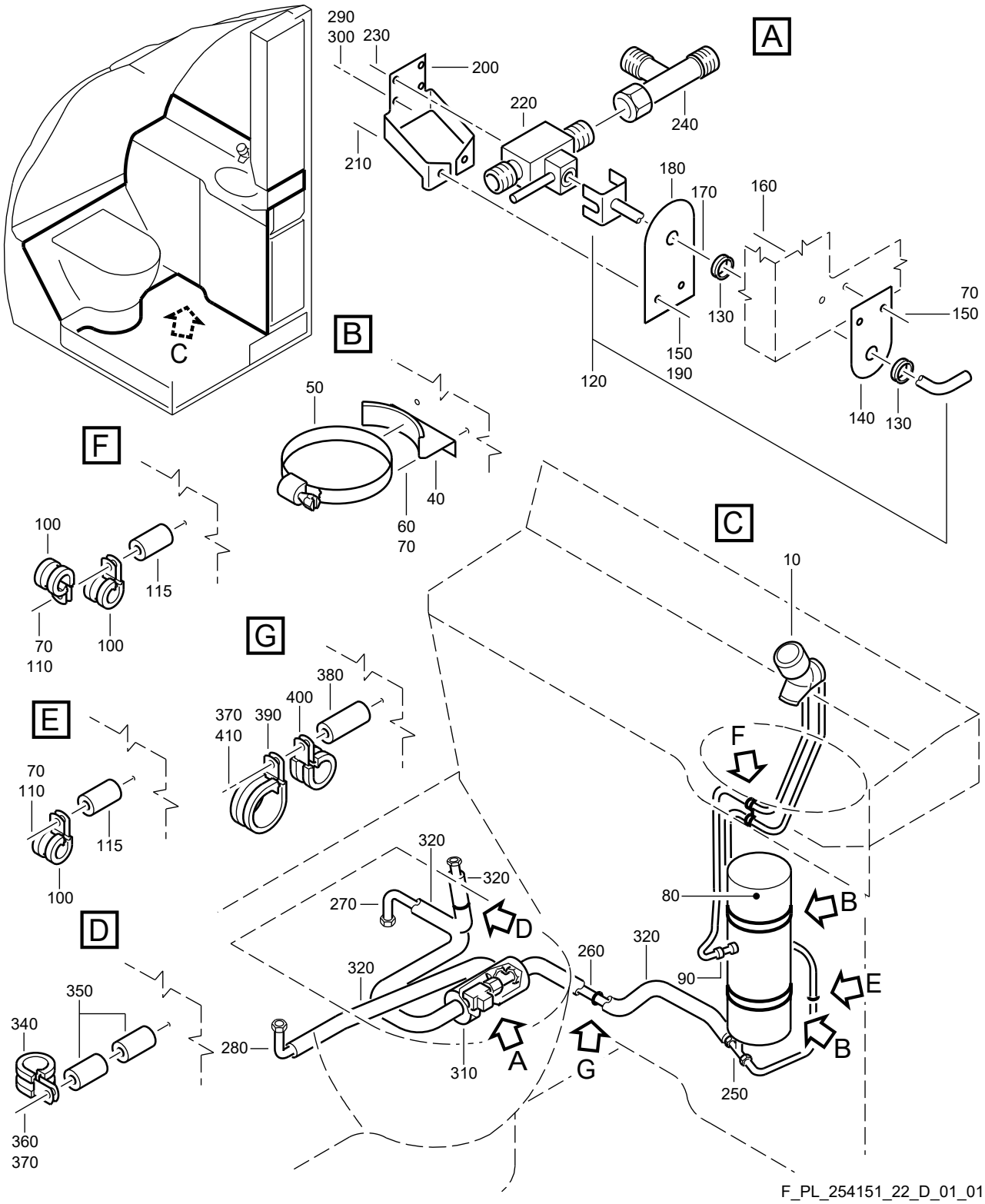

WATER SYSTEM-POTABLE
Figure 22D/EN254151SHEET22D01

FIG. ITEM	PART NUMBER	AIRLINE STOCK NUMBER	NOMENCLATURE 1234567	EFF CODE	UNITS PER ASSY
22D -001A	D2549030504881		. WATER SYSTEM-POTABLE NP PRE VSB A2-254-25-108 used on 180A (25415101J), 180A (25415101K), 180A(25415101L), 180A (25415101M), 180A (25415101N), 180C(25415101P), 180B (25415101Q), 180A (25415101R), 180A(25415101S), 180A (25415101T), 180A (25415101U), 180A(25415101V), 180A (25415101W), 180A (25415101X), 180C(25415101Y), 180A (25415101Z), 180A (254151410), 180A(25415141A), 180A (25415141B), 180A (25415141C), 180A(25415141D), 180A (25415141F) SEE 25-41-51-01J FOR NHA SEE 25-41-51-01K FOR NHA SEE 25-41-51-01L FOR NHA SEE 25-41-51-01M FOR NHA SEE 25-41-51-01N FOR NHA SEE 25-41-51-01P FOR NHA SEE 25-41-51-01Q FOR NHA SEE 25-41-51-01R FOR NHA SEE 25-41-51-01S FOR NHA SEE 25-41-51-01T FOR NHA SEE 25-41-51-01U FOR NHA SEE 25-41-51-01V FOR NHA SEE 25-41-51-01W FOR NHA SEE 25-41-51-01X FOR NHA SEE 25-41-51-01Y FOR NHA SEE 25-41-51-01Z FOR NHA SEE 25-41-51-410 FOR NHA SEE 25-41-51-41A FOR NHA SEE 25-41-51-41B FOR NHA SEE 25-41-51-41C FOR NHA SEE 25-41-51-41D FOR NHA SEE 25-41-51-41F FOR NHA		RF

- ITEM NOT ILLUSTRATED

FIG. ITEM	PART NUMBER	AIRLINE STOCK NUMBER	NOMENCLATURE 1234567	EFF CODE	UNITS PER ASSY
-001B	D2549030507881		. WATER SYSTEM-POTABLE NP used on 180C (25415101M), 180B (25415101T), 180F (25415101T), 180C (25415101V), 180B (25415101W) SEE 25-41-51-01M FOR NHA SEE 25-41-51-01T FOR NHA SEE 25-41-51-01T FOR NHA SEE 25-41-51-01V FOR NHA SEE 25-41-51-01W FOR NHA		RF

- ITEM NOT ILLUSTRATED

FIG. ITEM	PART NUMBER	AIRLINE STOCK NUMBER	NOMENCLATURE 1234567	EFF CODE	UNITS PER ASSY
-001C	D2549010606081		. WATER SYSTEM-POTABLE NP PRE VSB A2-254-25-015 PRE VSB A2-254-25-035 PRE VSB A2-254-25-077 PRE VSB A2-254-25-108 used on 180D (25415141A), 180B (25415141C), 180B (25415141F), 180A (25415141G), 180A (25415141H), 180A (25415141J), 180A (25415141K), 180A (25415141L), 180A (25415141M), 180D (25415141N), 180A (25415141P), 180A(25415141R), 180A (25415141S), 180A (25415141T), 180A(25415141U), 180A (25415141V), 180B (25415141W), 180A(25415141X), 180A (25415141Y), 180A (25415141Z), 180B(254151420), 180A (25415142A), 180A (25415142B), 180A(25415142C), 180B (25415142D), 180A (25415142E), 180A(25415142F), 180B (25415142G), 180C (25415142K) SEE 25-41-51-41A FOR NHA SEE 25-41-51-41C FOR NHA SEE 25-41-51-41F FOR NHA SEE 25-41-51-41G FOR NHA SEE 25-41-51-41H FOR NHA SEE 25-41-51-41J FOR NHA SEE 25-41-51-41K FOR NHA SEE 25-41-51-41L FOR NHA SEE 25-41-51-41M FOR NHA SEE 25-41-51-41N FOR NHA SEE 25-41-51-41P FOR NHA SEE 25-41-51-41R FOR NHA SEE 25-41-51-41S FOR NHA SEE 25-41-51-41T FOR NHA		RF

- ITEM NOT ILLUSTRATED

FIG. ITEM	PART NUMBER	AIRLINE STOCK NUMBER	NOMENCLATURE 1234567	EFF CODE	UNITS PER ASSY
			SEE 25-41-51-41U FOR NHA SEE 25-41-51-41V FOR NHA SEE 25-41-51-41W FOR NHA SEE 25-41-51-41X FOR NHA SEE 25-41-51-41Y FOR NHA SEE 25-41-51-41Z FOR NHA SEE 25-41-51-420 FOR NHA SEE 25-41-51-42A FOR NHA SEE 25-41-51-42B FOR NHA SEE 25-41-51-42C FOR NHA SEE 25-41-51-42D FOR NHA SEE 25-41-51-42E FOR NHA SEE 25-41-51-42F FOR NHA SEE 25-41-51-42G FOR NHA SEE 25-41-51-42K FOR NHA		
-001D	D2549030607081		. WATER SYSTEM-POTABLE NP used on 180D (25415141G), 180B (25415141K), 180E (25415141M), 180C (25415142B) SEE 25-41-51-41G FOR NHA SEE 25-41-51-41K FOR NHA SEE 25-41-51-41M FOR NHA SEE 25-41-51-42B FOR NHA		RF

- ITEM NOT ILLUSTRATED

FIG. ITEM	PART NUMBER	AIRLINE STOCK NUMBER	NOMENCLATURE 1234567	EFF CODE	UNITS PER ASSY
-001E	D2549020401281		. WATER SYSTEM-POTABLE NP PRE VSB A2-254-25-015 PRE VSB A2-254-25-029 used on 180C (25415142E), 180C (25415142F), 180A (25415142G), 180A (25415142H), 180A (25415142J), 180A(25415142K), 180A (25415142L), 180A (25415142M), 180A(25415142N), 180A (25415142P), 180A (25415142Q), 180A(25415142R), 180A (25415142S), 180A (25415142T), 180A(25415142U) SEE 25-41-51-42E FOR NHA SEE 25-41-51-42F FOR NHA SEE 25-41-51-42G FOR NHA SEE 25-41-51-42H FOR NHA SEE 25-41-51-42J FOR NHA SEE 25-41-51-42K FOR NHA SEE 25-41-51-42L FOR NHA SEE 25-41-51-42M FOR NHA SEE 25-41-51-42N FOR NHA SEE 25-41-51-42P FOR NHA SEE 25-41-51-42Q FOR NHA SEE 25-41-51-42R FOR NHA SEE 25-41-51-42S FOR NHA SEE 25-41-51-42T FOR NHA SEE 25-41-51-42U FOR NHA		RF
-001F	D2547161202281		. WATER SYSTEM-POTABLE NP POST SB 38-1077 used on 180E (25415141X) SEE 25-41-51-41X FOR NHA		RF

- ITEM NOT ILLUSTRATED

FIG. ITEM	PART NUMBER	AIRLINE STOCK NUMBER	NOMENCLATURE 1234567		EFF CODE	UNITS PER ASSY
-001G	R22540161100081		. WATER SYSTEM-POTABLE POST VSB A2-254-25-015 used on 180B (25415142M), 180C (25415142L) SEE 25-41-51-42L FOR NHA SEE 25-41-51-42M FOR NHA	NP		RF
-001H	R22540119900081		. WATER SYSTEM-POTABLE POST VSB A2-254-25-015 POST VSB A2-254-25-035 used on 180F (25415141X), 180E (25415142A) SEE 25-41-51-41X FOR NHA SEE 25-41-51-42A FOR NHA	NP		RF
-001J	R22540167600081		. WATER SYSTEM-POTABLE POST VSB A2-254-25-029 used on 180C (25415142H) SEE 25-41-51-42H FOR NHA	NP		RF
-001K	R22540162900281		. WATER SYSTEM-POTABLE POST VSB A2-254-25-077 used on 180D (25415141P), 180B (25415142C) SEE 25-41-51-41P FOR NHA SEE 25-41-51-42C FOR NHA	NP		RF
-001L	R22540114501481		. WATER SYSTEM-POTABLE POST VSB A2-254-25-108 used on 180B (25415141R) SEE 25-41-51-41R FOR NHA	NP		RF
-001M	R22540114501281		. WATER SYSTEM-POTABLE POST VSB A2-254-25-108 used on 180C (25415141C) SEE 25-41-51-41C FOR NHA	NP		RF
-001N	R22540119604681		. WATER SYSTEM-POTABLE used on 180E (254151410) SEE 25-41-51-410 FOR NHA	NP		RF

- ITEM NOT ILLUSTRATED

FIG. ITEM	PART NUMBER	AIRLINE STOCK NUMBER	NOMENCLATURE 1234567	EFF CODE	UNITS PER ASSY
-001P	R22540161900081		. WATER SYSTEM-POTABLE NP used on 180C (25415141J), 180D (25415141K), 180C (25415141L), 180E (25415141N), 180C (25415141R), 180E (25415141W), 180E (254151420) SEE 25-41-51-41J FOR NHA SEE 25-41-51-41K FOR NHA SEE 25-41-51-41L FOR NHA SEE 25-41-51-41N FOR NHA SEE 25-41-51-41R FOR NHA SEE 25-41-51-41W FOR NHA SEE 25-41-51-420 FOR NHA		RF
-001Q	R22540119605681		. WATER SYSTEM-POTABLE NP used on 180G (25415141X) SEE 25-41-51-41X FOR NHA		RF
-001R	R22540119606481		. WATER SYSTEM-POTABLE NP used on 180F (25415142E), 180E (25415142J), 180B (25415142P) SEE 25-41-51-42E FOR NHA SEE 25-41-51-42J FOR NHA SEE 25-41-51-42P FOR NHA		RF
010A	2980292100000		. . FAUCET ASSY-WATER used on 001A, 001B, 001C, 001D, 001E, 001F, 001G, 001H, 001J, 001K, 001L, 001M, 001N, 001P, 001Q		001
-010B	2980332100000		. . FAUCET ASSY-WATER used on 001A, 001B, 001C, 001D, 001E, 001F, 001G, 001H, 001J, 001K, 001L, 001M, 001R		001

- ITEM NOT ILLUSTRATED

FIG. ITEM	PART NUMBER	AIRLINE STOCK NUMBER	NOMENCLATURE 1234567	EFF CODE	UNITS PER ASSY
040A	A238100301-200		. . BRACKET used on 001A, 001B, 001C, 001D, 001E, 001F, 001G, 001H, 001J, 001K, 001L, 001M, 001N, 001P, 001Q, 001R		002
050A	ASNA0033-112		. . CLAMP used on 001A, 001B, 001C, 001D, 001E, 001F, 001G, 001H, 001J, 001K, 001L, 001M, 001N, 001P, 001Q, 001R		002
060A	NAS1096-2-6		. . SCREW BUY PN NAS1801-08-6 used on 001A, 001B, 001C, 001D, 001E, 001F, 001G, 001H, 001J, 001K, 001L, 001M, 001N, 001P, 001Q, 001R		004
070A	NAS1149CN832R		. . WASHER used on 001A, 001B, 001C, 001D, 001E, 001F, 001G, 001H, 001J, 001K, 001L, 001M, 001N, 001P, 001Q, 001R		008
080A	24E507009G03		. . HEATER-WATER used on 001A, 001B, 001C, 001D, 001E, 001F, 001G, 001H, 001J, 001K, 001L, 001M, 001N, 001P, 001Q, 001R		001
090A	NAS1762J0606		. . ELBOW-REDUCER used on 001A, 001B, 001C, 001D, 001E, 001F, 001G, 001H, 001J, 001K, 001L, 001M, 001N, 001P, 001Q, 001R		001

- ITEM NOT ILLUSTRATED

FIG. ITEM	PART NUMBER	AIRLINE STOCK NUMBER	NOMENCLATURE 1234567	EFF CODE	UNITS PER ASSY
100A	MS21919WCH7		. . CLAMP BUY PN AS21919WCH07 used on 001A, 001B, 001C, 001D, 001E, 001F, 001G, 001H, 001J, 001K, 001L, 001M, 001N, 001P, 001Q, 001R		003
110A	NAS1096-2-16		. . SCREW BUY PN NAS1801-08-16 used on 001A, 001B, 001C, 001D, 001E, 001F, 001G, 001H, 001J, 001K, 001L, 001M, 001N, 001P, 001Q, 001R		002
115A	NSA5527-03-02		. . SPACER used on 001A, 001B, 001C, 001D, 001E, 001F, 001G, 001H, 001J, 001K, 001L, 001M, 001N, 001P, 001Q, 001R		002
120A	A338100312-004		. . ROD-SHUTOFF VALVE used on 001A, 001B, 001C, 001D, 001E, 001F, 001G, 001H, 001J, 001K, 001L, 001M, 001N, 001P, 001Q, 001R		001
130A	LN9240-6X2		. . GROMMET used on 001A, 001B, 001C, 001D, 001E, 001F, 001G, 001H, 001J, 001K, 001L, 001M, 001N, 001P, 001Q, 001R		002
140A	A338100312-200		. . BRACKET used on 001A, 001B, 001C, 001D, 001E, 001F, 001G, 001H, 001J, 001K, 001L, 001M, 001N, 001P, 001Q, 001R		001

- ITEM NOT ILLUSTRATED

FIG. ITEM	PART NUMBER	AIRLINE STOCK NUMBER	NOMENCLATURE 1234567	EFF CODE	UNITS PER ASSY
150A	NAS1102-08-12		. . SCREW used on 001A, 001B, 001C, 001D, 001E, 001F, 001G, 001H, 001J, 001K, 001L, 001M, 001N, 001P, 001Q, 001R		004
160A	MS21042-06		. . NUT used on 001A, 001B, 001C, 001D, 001E, 001F, 001G, 001H, 001J, 001K, 001L, 001M, 001N, 001P, 001Q, 001R		002
170A	NSA5321-6		. . RING-RETAINING used on 001A, 001B, 001C, 001D, 001E, 001F, 001G, 001H, 001J, 001K, 001L, 001M, 001N, 001P, 001Q, 001R		001
180A	A338100312-202		. . BRACKET used on 001A, 001B, 001C, 001D, 001E, 001F, 001G, 001H, 001J, 001K, 001L, 001M, 001N, 001P, 001Q, 001R		001
190A	0-123-000700000		. . WASHER used on 001A, 001B, 001C, 001D, 001E, 001F, 001G, 001H, 001J, 001K, 001L, 001M, 001N, 001P, 001Q, 001R		002
200A	A338100312-000		. . BRACKET-SHUTOFF VALVE used on 001A, 001B, 001C, 001D, 001E, 001F, 001G, 001H, 001J, 001K, 001L, 001M, 001N, 001P, 001Q, 001R		001
210A	NAS1068C08		. . . NUT BUY PN MS21076L08N used on 200A		002

- ITEM NOT ILLUSTRATED

FIG. ITEM	PART NUMBER	AIRLINE STOCK NUMBER	NOMENCLATURE 1234567	EFF CODE	UNITS PER ASSY
220A	Z02HV08-1		. . VALVE-SHUTOFF used on 001A, 001B, 001M, 001N		001
-220B	GLS01-002-0000		. . VALVE-SHUTOFF used on 001C, 001D, 001E, 001F, 001G, 001H, 001J, 001K, 001L, 001P, 001Q, 001R		001
230A	NAS1100-06-6		. . . SCREW used on 220A		004
240A	NAS1763J080808		. . TEE used on 001A, 001B, 001C, 001D, 001E, 001F, 001G, 001H, 001J, 001K, 001L, 001M, 001N, 001P, 001Q, 001R		001
250A	NAS1764J080606		. . TEE used on 001A, 001B, 001C, 001D, 001E, 001F, 001G, 001H, 001J, 001K, 001L, 001M, 001N, 001P, 001Q, 001R		001
260A	AE3663630H0174		. . HOSE used on 001A, 001B, 001C, 001D, 001E, 001F, 001G, 001H, 001J, 001K, 001L, 001M, 001N, 001P, 001Q, 001R		001
270A	A238101030-000		. . TUBE PRE VSB A2-254-25-077 PRE VSB A2-254-25-108 used on 001A, 001C, 001E		001

- ITEM NOT ILLUSTRATED

FIG. ITEM	PART NUMBER	AIRLINE STOCK NUMBER	NOMENCLATURE 1234567	EFF CODE	UNITS PER ASSY
-270B	A238101008-004		. . TUBE POST SB 38-1077 POST VSB A2-254-25-077 POST VSB A2-254-25-108 used on 001B, 001D, 001F, 001G, 001H, 001J, 001K, 001L, 001M, 001Q		001
280A	AE6471H0187-266		. . HOSE used on 001A, 001B, 001C, 001D, 001E, 001F, 001G, 001H, 001J, 001K, 001L, 001M, 001N, 001P, 001Q, 001R		001
290A	NAS1100-06-6		. . SCREW used on 001C, 001D, 001E, 001F, 001G, 001H, 001J, 001K, 001L, 001P, 001Q, 001R		004
300A	NAS1149CN632R		. . WASHER used on 001C, 001D, 001E, 001F, 001G, 001H, 001J, 001K, 001L, 001P, 001Q, 001R		004
310A	ABS0619A08C01		. . INSULATION POST SB 38-1077 POST VSB A2-254-25-077 POST VSB A2-254-25-108 used on 001F, 001G, 001H, 001J, 001K, 001L, 001M, 001Q		AR
320A	ABS0616A1-08A		. . INSULATION POST SB 38-1077 POST VSB A2-254-25-077 POST VSB A2-254-25-108 used on 001F, 001G, 001H, 001J, 001K, 001L, 001M, 001Q		AR

- ITEM NOT ILLUSTRATED

FIG. ITEM	PART NUMBER	AIRLINE STOCK NUMBER	NOMENCLATURE 1234567	EFF CODE	UNITS PER ASSY
-330A	ABS5662B01		. . TAPE-ADHESIVE USE AS REQUIRED POST SB 38-1077 POST VSB A2-254-25-077 POST VSB A2-254-25-108 used on 001F, 001G, 001H, 001J, 001K, 001L, 001M, 001Q		AR
340A	MS21919WCH8		. . CLAMP POST SB 38-1077 BUY PN AS21919WCH08 POST VSB A2-254-25-077 POST VSB A2-254-25-108 used on 001F, 001G, 001H, 001J, 001K, 001L, 001M, 001Q		001
350A	NSA5527-03-02		. . SPACER used on 001F		002
-350B	NSA5527-03-08		. . SPACER POST VSB A2-254-25-077 POST VSB A2-254-25-108 used on 001K, 001L, 001M		001
-350C	NSA5527-03-08		. . SPACER used on		001
360A	NAS1801-08-24		. . SCREW used on 001F		001
-360B	NAS1801-08-18		. . SCREW POST VSB A2-254-25-077 POST VSB A2-254-25-108 used on 001F, 001K, 001L, 001M		001
-365A	NAS1833C08-370		. . INSERT POST VSB A2-254-25-077 POST VSB A2-254-25-108 used on 001F, 001G, 001H, 001J, 001K, 001L, 001M, 001Q		001

- ITEM NOT ILLUSTRATED

FIG. ITEM	PART NUMBER	AIRLINE STOCK NUMBER	NOMENCLATURE 1234567	EFF CODE	UNITS PER ASSY
370A	NAS1149CN832R		. . WASHER used on 001F, 001J		002
-370B	NAS1149CN832R		. . WASHER POST VSB A2-254-25-077 POST VSB A2-254-25-108 used on 001K, 001L, 001M		001
380A	NSA5527-03-08		. . SPACER used on 001F, 001J		001
390A	MS21919WCH18		. . CLAMP POST SB 38-1077 BUY PN AS21919WCH18 used on 001F		001
400A	MS21919WCH9		. . CLAMP POST SB 38-1077 BUY PN AS21919WCH09 used on 001F		001
410A	NAS1801-08-18		. . SCREW used on 001F		001

- ITEM NOT ILLUSTRATED

THIS PAGE IS INTENTIONALLY LEFT BLANK

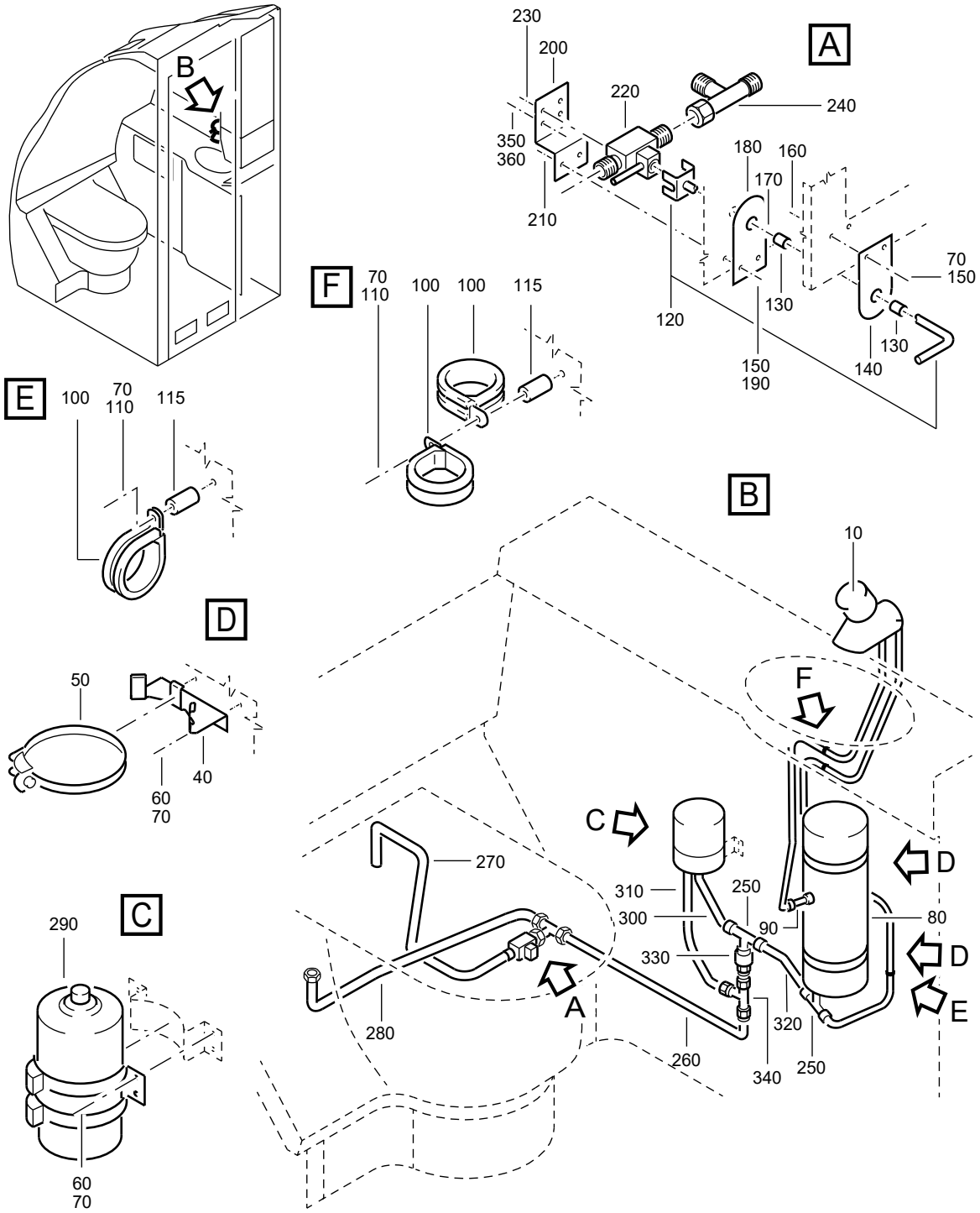

F_PL_254151_22_E_01_00

WATER SYSTEM-POTABLE
Figure 22E/EN254151SHEET22E01

FIG. ITEM	PART NUMBER	AIRLINE STOCK NUMBER	NOMENCLATURE 1234567		EFF CODE	UNITS PER ASSY
22E						
-001A	D2549020506281		. WATER SYSTEM-POTABLE used on 180E (25415101J), 180B (25415101P), 180E(25415101T), 180D (25415101V), 180C (25415101W), 180B (25415101Y), 180E (25415141B), 180C (25415141D) SEE 25-41-51-01J FOR NHA SEE 25-41-51-01P FOR NHA SEE 25-41-51-01T FOR NHA SEE 25-41-51-01V FOR NHA SEE 25-41-51-01W FOR NHA SEE 25-41-51-01Y FOR NHA SEE 25-41-51-41B FOR NHA SEE 25-41-51-41D FOR NHA	NP		RF
-001B	D2549030505481		. WATER SYSTEM-POTABLE used on 180F (25415101J), 180A (25415101P), 180C(25415101Q) SEE 25-41-51-01J FOR NHA SEE 25-41-51-01P FOR NHA SEE 25-41-51-01Q FOR NHA	NP		RF
-001C	D2549030607481		. WATER SYSTEM-POTABLE used on 180C (25415141G), 180C (25415141H), 180D (25415141M), 180C (25415141N), 180D (25415141W), 180C(25415141X), 180C (254151420) SEE 25-41-51-41G FOR NHA SEE 25-41-51-41H FOR NHA SEE 25-41-51-41M FOR NHA SEE 25-41-51-41N FOR NHA SEE 25-41-51-41W FOR NHA SEE 25-41-51-41X FOR NHA SEE 25-41-51-420 FOR NHA	NP		RF

- ITEM NOT ILLUSTRATED

FIG. ITEM	PART NUMBER	AIRLINE STOCK NUMBER	NOMENCLATURE 1234567	EFF CODE	UNITS PER ASSY
-001D	D2549010401681		. WATER SYSTEM-POTABLE NP used on 180C (25415142J) SEE 25-41-51-42J FOR NHA		RF
010A	2980292100000		. . FAUCET ASSY-WATER used on 001A, 001B, 001C, 001D		001
-010B	2980332100000		. . FAUCET ASSY-WATER used on 001A, 001B, 001C, 001D		001
040A	A238100301-200		. . BRACKET used on 001A, 001B, 001C, 001D		002
050A	ASNA0033-112		. . CLAMP used on 001A, 001B, 001C, 001D		002
060A	NAS1096-2-6		. . SCREW BUY PN NAS1801-08-6 used on 001A, 001B, 001C, 001D		008
070A	NAS1149CN832R		. . WASHER used on 001A, 001B, 001C, 001D		012
080A	24E507009G03		. . HEATER-WATER used on 001A, 001B, 001C, 001D		001
090A	NAS1762J0606		. . ELBOW-REDUCER used on 001A, 001B, 001C, 001D		001
100A	MS21919WCH7		. . CLAMP BUY PN AS21919WCH07 used on 001A, 001B, 001C, 001D		003
110A	NAS1096-2-16		. . SCREW BUY PN NAS1801-08-16 used on 001A, 001B, 001C, 001D		002
115A	NSA5527-03-02		. . SPACER used on 001A, 001B, 001C, 001D		002

- ITEM NOT ILLUSTRATED

FIG. ITEM	PART NUMBER	AIRLINE STOCK NUMBER	NOMENCLATURE 1234567	EFF CODE	UNITS PER ASSY
120A	A338100312-004		. . ROD-SHUTOFF VALVE used on 001A, 001B, 001C, 001D		001
130A	LN9240-6X2		. . GROMMET used on 001A, 001B, 001C, 001D		002
140A	A338100312-200		. . BRACKET used on 001A, 001B, 001C, 001D		001
150A	NAS1102-08-12		. . SCREW used on 001A, 001B, 001C, 001D		004
160A	MS21042-06		. . NUT used on 001A, 001B, 001C, 001D		002
170A	NSA5321-6		. . RING-RETAINING used on 001A, 001B, 001C, 001D		001
180A	A338100312-202		. . BRACKET used on 001A, 001B, 001C, 001D		001
190A	0-123-000700000		. . WASHER used on 001A, 001B, 001C, 001D		002
200A	A338100312-000		. . BRACKET-SHUTOFF VALVE used on 001A, 001B, 001C, 001D		001
210A	NAS1068C08		. . . NUT BUY PN MS21076L08N used on 200A		002
220A	Z02HV08-1		. . VALVE-SHUTOFF used on 001A, 001B		001
-220B	GLS01-002-0000		. . VALVE-SHUTOFF used on 001C, 001D		001
230A	NAS1100-06-6		. . . SCREW used on 220A		004

- ITEM NOT ILLUSTRATED

FIG. ITEM	PART NUMBER	AIRLINE STOCK NUMBER	NOMENCLATURE 1234567	EFF CODE	UNITS PER ASSY
240A	NAS1764J080808		. . TEE used on 001A, 001B, 001C, 001D		001
250A	NAS1764J060606		. . TEE used on 001A, 001B, 001C, 001D		002
260A	AE3663630H0082		. . HOSE used on 001A, 001B, 001C, 001D		001
270A	A238101030-000		. . TUBE used on 001A, 001B, 001C, 001D		001
280A	AE6471H0187-266		. . HOSE used on 001A, 001B, 001C, 001D		001
290A	770027		. . FILTER ASSY-DRINKING WATER used on 001A, 001C		001
-290B	770107		. . FILTER ASSY-WATER, DRINKING used on 001B, 001D		001
300A	A238100004-000		. . TUBE used on 001A, 001B, 001C, 001D		001
310A	AE3663631G0114		. . HOSE used on 001A, 001B, 001C, 001D		001
320A	A238100007-000		. . TUBE used on 001A, 001B, 001C, 001D		001
330A	HTE400179		. . VALVE-NONRETURN used on 001A, 001B, 001C, 001D		001
340A	NAS1763J080806		. . TEE used on 001A, 001B, 001C, 001D		001
350A	NAS1100-06-6		. . SCREW used on 001C, 001D		004

- ITEM NOT ILLUSTRATED

FIG. ITEM	PART NUMBER	AIRLINE STOCK NUMBER	NOMENCLATURE 1234567	EFF CODE	UNITS PER ASSY
360A	NAS1149CN632R		. . WASHER used on 001C, 001D		004

- ITEM NOT ILLUSTRATED

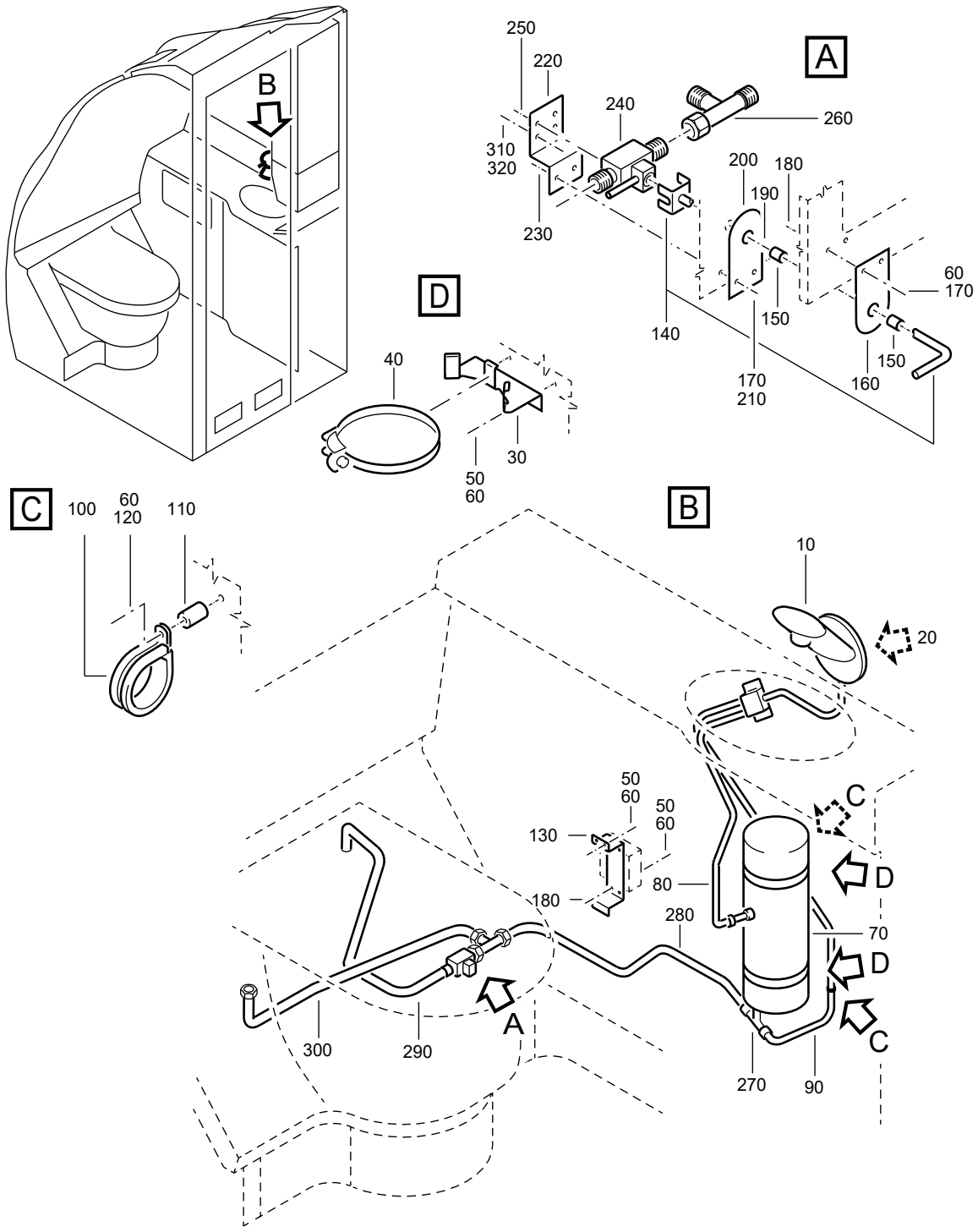

F_PL_254151_22_F_01_00

WATER SYSTEM-POTABLE
Figure 22F/EN254151SHEET22F01

FIG. ITEM	PART NUMBER	AIRLINE STOCK NUMBER	NOMENCLATURE 1234567	EFF CODE	UNITS PER ASSY
22F					
-001A	D2549010510481		. WATER SYSTEM-POTABLE NP used on 180D (25415101J), 180C (25415101T), 180B(254151410) SEE 25-41-51-01J FOR NHA SEE 25-41-51-01T FOR NHA SEE 25-41-51-410 FOR NHA		RF
-001B	D2549010604881		. WATER SYSTEM-POTABLE NP used on 180C (25415141A) SEE 25-41-51-41A FOR NHA		RF
-001C	D2549010606481		. WATER SYSTEM-POTABLE NP used on 180B (25415141H), 180B (25415141M), 180B (25415141N), 180E (25415142E), 180D (25415142J), 180E (25415142K), 180B (25415142N), 180C (25415142R) SEE 25-41-51-41H FOR NHA SEE 25-41-51-41M FOR NHA SEE 25-41-51-41N FOR NHA SEE 25-41-51-42E FOR NHA SEE 25-41-51-42J FOR NHA SEE 25-41-51-42K FOR NHA SEE 25-41-51-42N FOR NHA SEE 25-41-51-42R FOR NHA		RF
-001D	D2549030700681		. WATER SYSTEM-POTABLE NP used on 180D (25415142N), 180B (25415142Q), 180C (25415142T) SEE 25-41-51-42N FOR NHA SEE 25-41-51-42Q FOR NHA SEE 25-41-51-42T FOR NHA		RF
010A	AR9840-5W31D544		. . FAUCET ASSY-INFRARED used on 001A, 001B, 001C		001

- ITEM NOT ILLUSTRATED

FIG. ITEM	PART NUMBER	AIRLINE STOCK NUMBER	NOMENCLATURE 1234567	EFF CODE	UNITS PER ASSY
-010B	AR9840-3W31D544		. . FAUCET ASSY-INFRARED used on 001A, 001B, 001C		001
-010C	AR9840-5W12D544		. . FAUCET ASSY-WATER used on 001D		001
020A	NAS1100E08-7		. . SCREW used on 001A, 001B, 001C, 001D		001
030A	A238100301-200		. . BRACKET used on 001A, 001B, 001C, 001D		002
040A	ASNA0033-112		. . CLAMP used on 001A, 001B, 001C, 001D		002
050A	NAS1096-2-6		. . SCREW BUY PN NAS1801-08-6 used on 001A, 001B, 001C, 001D		012
060A	NAS1149CN832R		. . WASHER used on 001A, 001B, 001C, 001D		016
070A	24E507009G03		. . HEATER-WATER used on 001A, 001B, 001C, 001D		001
080A	AE3663630G0141		. . HOSE used on 001A, 001B, 001C, 001D		001
090A	AE6471G0221-210		. . HOSE used on 001A, 001B, 001C, 001D		001
100A	MS21919WCH7		. . CLAMP BUY PN AS21919WCH07 used on 001A, 001B, 001C, 001D		002
110A	NSA5527-03-02		. . SPACER used on 001A, 001B, 001C, 001D		002

- ITEM NOT ILLUSTRATED

FIG. ITEM	PART NUMBER	AIRLINE STOCK NUMBER	NOMENCLATURE 1234567	EFF CODE	UNITS PER ASSY
120A	NAS1096-2-14		. . SCREW BUY PN NAS1801-08-14 used on 001A, 001B, 001C, 001D		002
130A	A225400425-200		. . ANGLE used on 001A, 001B, 001C, 001D		001
140A	A338100312-004		. . ROD-SHUTOFF VALVE used on 001A, 001B, 001C, 001D		001
150A	LN9240-6X2		. . GROMMET used on 001A, 001B, 001C, 001D		002
160A	A338100312-200		. . BRACKET used on 001A, 001B, 001C, 001D		001
170A	NAS1102-08-12		. . SCREW used on 001A, 001B, 001C, 001D		004
180A	MS21042-06		. . NUT used on 001A, 001B, 001C, 001D		006
190A	NSA5321-6		. . RING-RETAINING used on 001A, 001B, 001C, 001D		001
200A	A338100312-202		. . BRACKET used on 001A, 001B, 001C, 001D		001
210A	0-123-000700000		. . WASHER used on 001A, 001B, 001C, 001D		002
220A	A338100312-000		. . BRACKET-SHUTOFF VALVE used on 001A, 001B, 001C, 001D		001
230A	NAS1068C08		. . . NUT BUY PN MS21076L08N used on 220A		002
240A	Z02HV08-1		. . VALVE-SHUTOFF used on 001A, 001B		001

- ITEM NOT ILLUSTRATED

FIG. ITEM	PART NUMBER	AIRLINE STOCK NUMBER	NOMENCLATURE 1234567	EFF CODE	UNITS PER ASSY
-240B	GLS01-002-0000		. . VALVE-SHUTOFF used on 001C, 001D		001
250A	NAS1100-06-6		. . . SCREW used on 240A		004
260A	NAS1763J080808		. . TEE used on 001A, 001B, 001C, 001D		001
270A	NAS1764J080606		. . TEE used on 001A, 001B, 001C, 001D		001
280A	AE3663630H0174		. . HOSE used on 001A, 001B, 001C, 001D		001
290A	A238101030-000		. . TUBE used on 001A, 001B, 001C, 001D		001
300A	AE6471H0187-266		. . HOSE used on 001A, 001B, 001C, 001D		001
310A	NAS1100-06-6		. . SCREW used on 001C, 001D		004
320A	NAS1149CN632R		. . WASHER used on 001C, 001D		004

- ITEM NOT ILLUSTRATED

THIS PAGE IS INTENTIONALLY LEFT BLANK

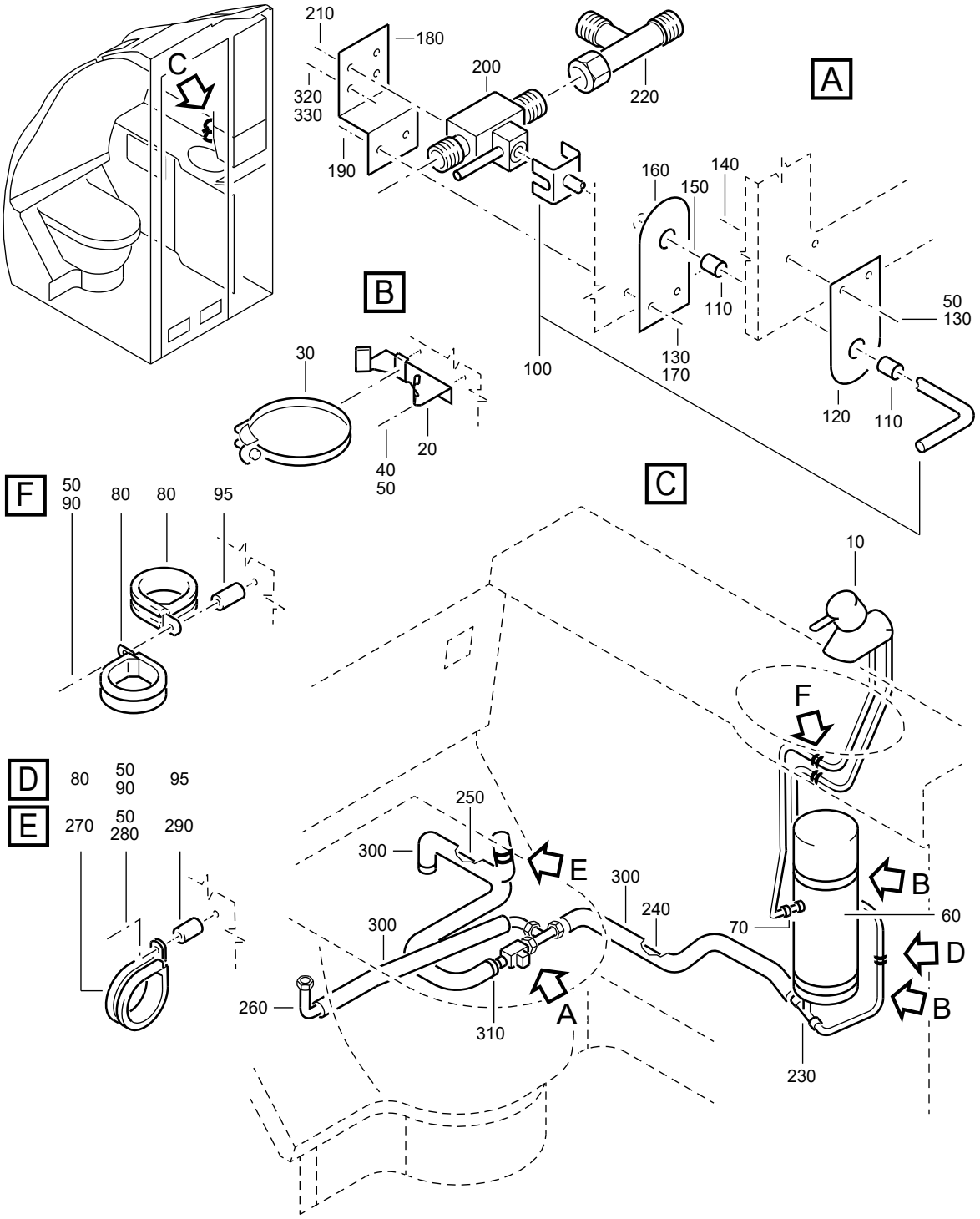

F_PL_254151_22_G_01_00

WATER SYSTEM-POTABLE
Figure 22G/EN254151SHEET22G01

FIG. ITEM	PART NUMBER	AIRLINE STOCK NUMBER	NOMENCLATURE 1234567	EFF CODE	UNITS PER ASSY
22G -001A	D2549030504081		. WATER SYSTEM-POTABLE NP used on 180C (25415101J), 180B (25415101K), 180B(25415101M), 180A (25415101Q), 180B (25415101S), 180D(25415101T), 180B (25415101U), 180B (25415101V), 180A(25415101Y), 180B (25415101Z), 180C (25415141B), 180B(25415141D) SEE 25-41-51-01J FOR NHA SEE 25-41-51-01K FOR NHA SEE 25-41-51-01M FOR NHA SEE 25-41-51-01Q FOR NHA SEE 25-41-51-01S FOR NHA SEE 25-41-51-01T FOR NHA SEE 25-41-51-01U FOR NHA SEE 25-41-51-01V FOR NHA SEE 25-41-51-01Y FOR NHA SEE 25-41-51-01Z FOR NHA SEE 25-41-51-41B FOR NHA SEE 25-41-51-41D FOR NHA		RF

- ITEM NOT ILLUSTRATED

FIG. ITEM	PART NUMBER	AIRLINE STOCK NUMBER	NOMENCLATURE 1234567	EFF CODE	UNITS PER ASSY
-001B	D2549030608281		. WATER SYSTEM-POTABLE NP used on 180B (25415141G), 180B (25415141J), 180C (25415141K), 180B (25415141L), 180C (25415141M), 180A (25415141N), 180B (25415141P), 190A (25415141Q), 180B (25415141S), 180B (25415141T), 180B (25415141U), 180B (25415141V), 180C (25415141W), 180B (25415141X), 180B(25415141Z), 180D (25415142A) SEE 25-41-51-41G FOR NHA SEE 25-41-51-41J FOR NHA SEE 25-41-51-41K FOR NHA SEE 25-41-51-41L FOR NHA SEE 25-41-51-41M FOR NHA SEE 25-41-51-41N FOR NHA SEE 25-41-51-41P FOR NHA SEE 25-41-51-41Q FOR NHA SEE 25-41-51-41S FOR NHA SEE 25-41-51-41T FOR NHA SEE 25-41-51-41U FOR NHA SEE 25-41-51-41V FOR NHA SEE 25-41-51-41W FOR NHA SEE 25-41-51-41X FOR NHA SEE 25-41-51-41Z FOR NHA SEE 25-41-51-42A FOR NHA		RF

- ITEM NOT ILLUSTRATED

FIG. ITEM	PART NUMBER	AIRLINE STOCK NUMBER	NOMENCLATURE 1234567		EFF CODE	UNITS PER ASSY
-001C	D2549030402081		. WATER SYSTEM-POTABLE used on 180D (25415141X), 180B (25415141Y), 180C (25415141Z), 180A (254151420), 180C (25415142A), 180B (25415142B), 180A (25415142D), 180B (25415142F), 180D (25415142G) SEE 25-41-51-41X FOR NHA SEE 25-41-51-41Y FOR NHA SEE 25-41-51-41Z FOR NHA SEE 25-41-51-420 FOR NHA SEE 25-41-51-42A FOR NHA SEE 25-41-51-42B FOR NHA SEE 25-41-51-42D FOR NHA SEE 25-41-51-42F FOR NHA SEE 25-41-51-42G FOR NHA	NP		RF
-001D	D2549030513281		. WATER SYSTEM-POTABLE used on 180E (25415101V) SEE 25-41-51-01V FOR NHA	NP		RF
-001E	D2549030410081		. WATER SYSTEM-POTABLE used on 180D (25415142B), 180D (25415142E), 180D (25415142F), 180B (25415142H), 180B (25415142K), 180B (25415142L), 180C (25415142N), 180C (25415142Q), 180B (25415142R), 180B (25415142T) SEE 25-41-51-42B FOR NHA SEE 25-41-51-42E FOR NHA SEE 25-41-51-42F FOR NHA SEE 25-41-51-42H FOR NHA SEE 25-41-51-42K FOR NHA SEE 25-41-51-42L FOR NHA SEE 25-41-51-42N FOR NHA SEE 25-41-51-42Q FOR NHA SEE 25-41-51-42R FOR NHA SEE 25-41-51-42T FOR NHA	NP		RF

- ITEM NOT ILLUSTRATED

FIG. ITEM	PART NUMBER	AIRLINE STOCK NUMBER	NOMENCLATURE 1234567	EFF CODE	UNITS PER ASSY
010A	2980292100000		. . FAUCET ASSY-WATER used on 001A, 001B, 001C, 001D, 001E		001
-010B	2980332100000		. . FAUCET ASSY-WATER used on 001A, 001B, 001C, 001D, 001E		001
020A	A238100301-200		. . BRACKET used on 001A, 001B, 001C, 001D, 001E		002
030A	ASNA0033-112		. . CLAMP used on 001A, 001B, 001C, 001D, 001E		002
040A	NAS1096-2-6		. . SCREW BUY PN NAS1801-08-6 used on 001A, 001B, 001C, 001D, 001E		004
050A	NAS1149CN832R		. . WASHER used on 001A, 001B, 001C, 001D, 001E		009
060A	24E507009G03		. . HEATER-WATER used on 001A, 001B, 001C, 001D, 001E		001
070A	NAS1762J0606		. . ELBOW-REDUCER used on 001A, 001B, 001C, 001D, 001E		001
080A	MS21919WCH7		. . CLAMP BUY PN AS21919WCH07 used on 001A, 001B, 001C, 001D, 001E		003

- ITEM NOT ILLUSTRATED

FIG. ITEM	PART NUMBER	AIRLINE STOCK NUMBER	NOMENCLATURE 1234567	EFF CODE	UNITS PER ASSY
090A	NAS1096-2-16		. . SCREW BUY PN NAS1801-08-16 used on 001A, 001B, 001C, 001D, 001E		002
095A	NSA5527-03-02		. . SPACER used on 001A, 001B, 001C, 001D, 001E		002
100A	A338100312-004		. . ROD-SHUTOFF VALVE used on 001A, 001B, 001C, 001D, 001E		001
110A	LN9240-6X2		. . GROMMET used on 001A, 001B, 001C, 001D, 001E		002
120A	A338100312-200		. . BRACKET used on 001A, 001B, 001C, 001D, 001E		001
130A	NAS1102-08-12		. . SCREW used on 001A, 001B, 001C, 001D, 001E		004
140A	MS21042-06		. . NUT used on 001A, 001B, 001C, 001D, 001E		002
150A	NSA5321-6		. . RING-RETAINING used on 001A, 001B, 001C, 001D, 001E		001
160A	A338100312-202		. . BRACKET used on 001A, 001B, 001C, 001D, 001E		001
170A	0-123-000700000		. . WASHER used on 001A, 001B, 001C, 001D, 001E		002

- ITEM NOT ILLUSTRATED

FIG. ITEM	PART NUMBER	AIRLINE STOCK NUMBER	NOMENCLATURE 1234567	EFF CODE	UNITS PER ASSY
180A	A338100312-000		. . BRACKET-SHUTOFF VALVE used on 001A, 001B, 001C, 001D, 001E		001
190A	NAS1068C08		. . . NUT BUY PN MS21076L08N used on 180A		002
200A	Z02HV08-1		. . VALVE-SHUTOFF used on 001A, 001D		001
-200B	GLS01-002-0000		. . VALVE-SHUTOFF used on 001B, 001C, 001E		001
210A	NAS1100-06-6		. . . SCREW used on 200A		004
220A	NAS1763J080808		. . TEE used on 001A, 001B, 001C, 001D, 001E		001
230A	NAS1764J080606		. . TEE used on 001A, 001B, 001C, 001D, 001E		001
240A	AE3663630H0174		. . HOSE used on 001A, 001B, 001C, 001D, 001E		001
250A	A238101008-004		. . TUBE used on 001A, 001B, 001C, 001D, 001E		001
260A	AE6471H0187-266		. . HOSE used on 001A, 001B, 001C, 001D, 001E		001

- ITEM NOT ILLUSTRATED

FIG. ITEM	PART NUMBER	AIRLINE STOCK NUMBER	NOMENCLATURE 1234567	EFF CODE	UNITS PER ASSY
270A	MS21919WCH8		. . CLAMP BUY PN AS21919WCH08 used on 001A, 001B, 001C, 001D, 001E		001
280A	NAS1096-2-24		. . SCREW BUY PN NAS1801-08-24 used on 001A, 001B, 001C, 001D, 001E		001
290A	NSA5527-03-02		. . SPACER used on 001A, 001B, 001C, 001D, 001E		001
300A	ABS0616-1-08		. . INSULATION BUY PN ABS0616-1-08A used on 001A, 001B		003
-300B	ABS0616A1-08A		. . INSULATION POST SB 25-1315 used on 001C, 001D, 001E		003
310A	ABS0619-08-01		. . INSULATION used on 001A, 001B		001
-310B	ABS0619A08C01		. . INSULATION POST SB 25-1315 used on 001C, 001D, 001E		001
320A	NAS1100-06-6		. . SCREW used on 001B, 001C, 001E		004
330A	NAS1149CN632R		. . WASHER used on 001B, 001C, 001E		004

- ITEM NOT ILLUSTRATED

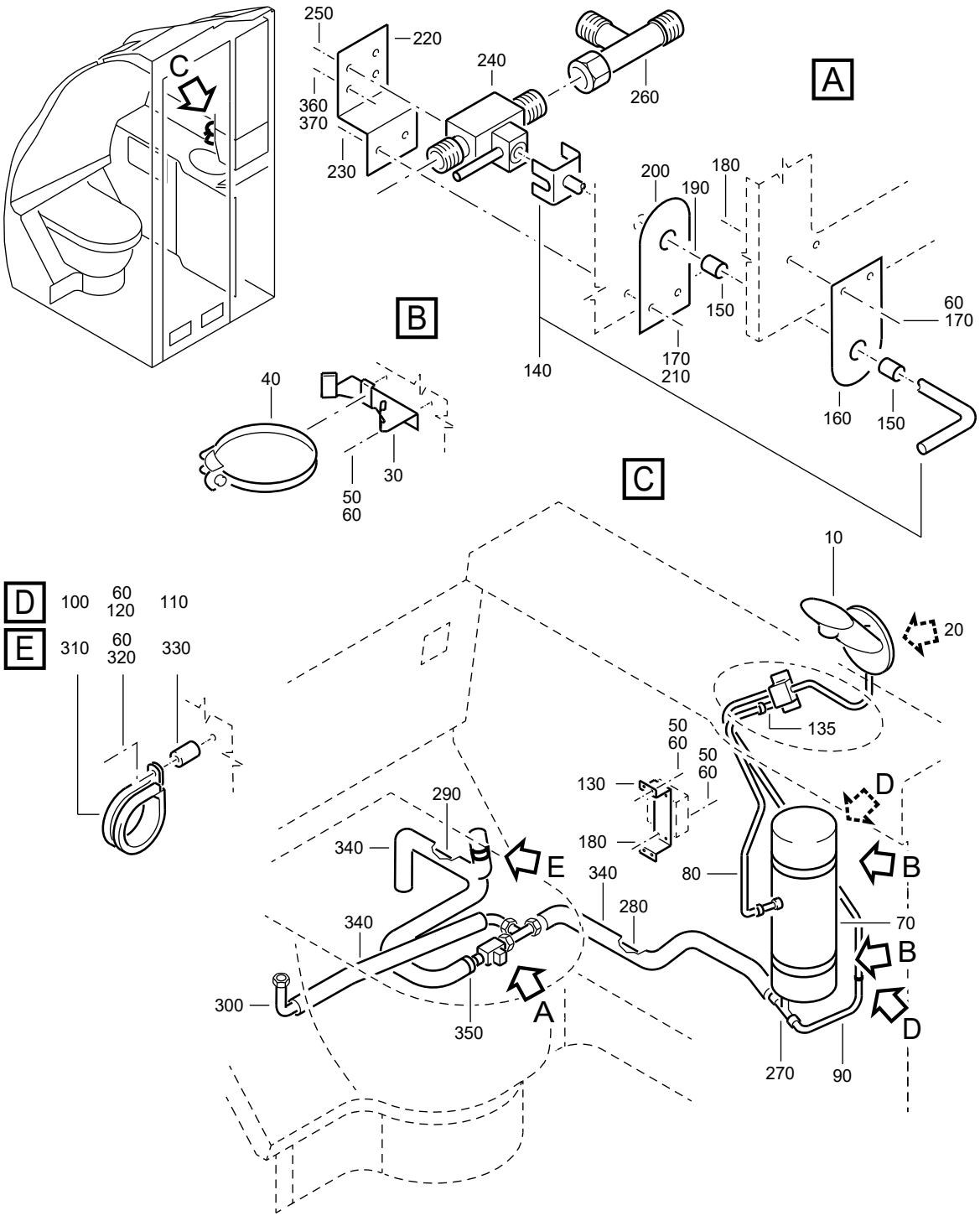

F_PL_254151_22_H_01_00

WATER SYSTEM-POTABLE
Figure 22H/EN254151SHEET22H01

FIG. ITEM	PART NUMBER	AIRLINE STOCK NUMBER	NOMENCLATURE 1234567		EFF CODE	UNITS PER ASSY
22H						
-001A	D2549010513681		. WATER SYSTEM-POTABLE used on 180C (25415101U), 180B (25415101X), 180C (254151410), 180D (25415141B) SEE 25-41-51-01U FOR NHA SEE 25-41-51-01X FOR NHA SEE 25-41-51-410 FOR NHA SEE 25-41-51-41B FOR NHA	NP		RF
-001B	D2549020713881		. WATER SYSTEM-POTABLE used on 180B (25415141A), 180C (25415141P), 180A (25415141W) SEE 25-41-51-41A FOR NHA SEE 25-41-51-41P FOR NHA SEE 25-41-51-41W FOR NHA	NP		RF
-001C	D2549020805481		. WATER SYSTEM-POTABLE used on 180D (254151420), 180B (25415142A), 180B(25415142E), 180C (25415142G), 180B (25415142J), 180D(25415142K) SEE 25-41-51-420 FOR NHA SEE 25-41-51-42A FOR NHA SEE 25-41-51-42E FOR NHA SEE 25-41-51-42G FOR NHA SEE 25-41-51-42J FOR NHA SEE 25-41-51-42K FOR NHA	NP		RF
010A	AR9840-3W31D544		. . FAUCET ASSY-INFRARED used on 001A			001
-010B	AR9840-5W12D544		. . FAUCET ASSY-WATER used on 001B, 001C			001
020A	NAS1100E08-7		. . SCREW used on 001A, 001B, 001C			001

- ITEM NOT ILLUSTRATED

FIG. ITEM	PART NUMBER	AIRLINE STOCK NUMBER	NOMENCLATURE 1234567	EFF CODE	UNITS PER ASSY
030A	A238100301-200		. . BRACKET used on 001A, 001B, 001C		002
040A	ASNA0033-112		. . CLAMP used on 001A, 001B, 001C		002
050A	NAS1096-2-6		. . SCREW BUY PN NAS1801-08-6 used on 001A, 001B, 001C		012
060A	NAS1149CN832R		. . WASHER used on 001A, 001B, 001C		016
070A	24E507009G03		. . HEATER-WATER used on 001A, 001B, 001C		001
080A	AE3663630G0141		. . HOSE used on 001A, 001B, 001C		001
090A	AE6471G0221-210		. . HOSE used on 001A, 001B, 001C		001
100A	MS21919WCH7		. . CLAMP BUY PN AS21919WCH07 used on 001A, 001B, 001C		002
110A	NSA5527-03-02		. . SPACER used on 001A, 001B, 001C		002
120A	NAS1096-2-14		. . SCREW BUY PN NAS1801-08-14 used on 001A, 001B, 001C		002
130A	A225400425-200		. . ANGLE used on 001A, 001B, 001C		001
135A	NAS1762J0606		. . ELBOW-REDUCER used on 001A, 001B, 001C		001

- ITEM NOT ILLUSTRATED

FIG. ITEM	PART NUMBER	AIRLINE STOCK NUMBER	NOMENCLATURE 1234567	EFF CODE	UNITS PER ASSY
140A	A338100312-004		. . ROD-SHUTOFF VALVE used on 001A, 001B, 001C		001
150A	LN9240-6X2		. . GROMMET used on 001A, 001B, 001C		002
160A	A338100312-200		. . BRACKET used on 001A, 001B, 001C		001
170A	NAS1102-08-12		. . SCREW used on 001A, 001B, 001C		004
180A	MS21042-06		. . NUT used on 001A, 001B, 001C		006
190A	NSA5321-6		. . RING-RETAINING used on 001A, 001B, 001C		001
200A	A338100312-202		. . BRACKET used on 001A, 001B, 001C		001
210A	0-123-000700000		. . WASHER used on 001A, 001B, 001C		002
220A	A338100312-000		. . BRACKET-SHUTOFF VALVE used on 001A, 001B, 001C		001
230A	NAS1068C08		. . . NUT BUY PN MS21076L08N used on 220A		002
240A	Z02HV08-1		. . VALVE-SHUTOFF used on 001A		001
-240B	GLS01-002-0000		. . VALVE-SHUTOFF used on 001B, 001C		001
250A	NAS1100-06-6		. . . SCREW used on 240A		004

- ITEM NOT ILLUSTRATED

FIG. ITEM	PART NUMBER	AIRLINE STOCK NUMBER	NOMENCLATURE 1234567	EFF CODE	UNITS PER ASSY
260A	NAS1763J080808		. . TEE used on 001A, 001B, 001C		001
270A	NAS1764J080606		. . TEE used on 001A, 001B, 001C		001
280A	AE3663630H0174		. . HOSE used on 001A, 001B, 001C		001
290A	A238101008-004		. . TUBE used on 001A, 001B, 001C		001
300A	AE6471H0187-266		. . HOSE used on 001A, 001B, 001C		001
310A	MS21919WCH8		. . CLAMP BUY PN AS21919WCH08 used on 001A, 001B, 001C		001
320A	NAS1096-2-24		. . SCREW BUY PN NAS1801-08-24 used on 001A, 001B, 001C		001
330A	NSA5527-03-02		. . SPACER used on 001A, 001B, 001C		001
340A	ABS0616-1-08		. . INSULATION BUY PN ABS0616-1-08A used on 001A, 001B		003
-340B	ABS0616A1-08A		. . INSULATION used on 001C		003
350A	ABS0619-08-01		. . INSULATION used on 001A, 001B		001
-350B	ABS0619A08C01		. . INSULATION used on 001C		001

- ITEM NOT ILLUSTRATED

FIG. ITEM	PART NUMBER	AIRLINE STOCK NUMBER	NOMENCLATURE 1234567	EFF CODE	UNITS PER ASSY
360A	NAS1100-06-6		. . SCREW used on 001B, 001C		004
370A	NAS1149CN632R		. . WASHER used on 001B, 001C		004

- ITEM NOT ILLUSTRATED

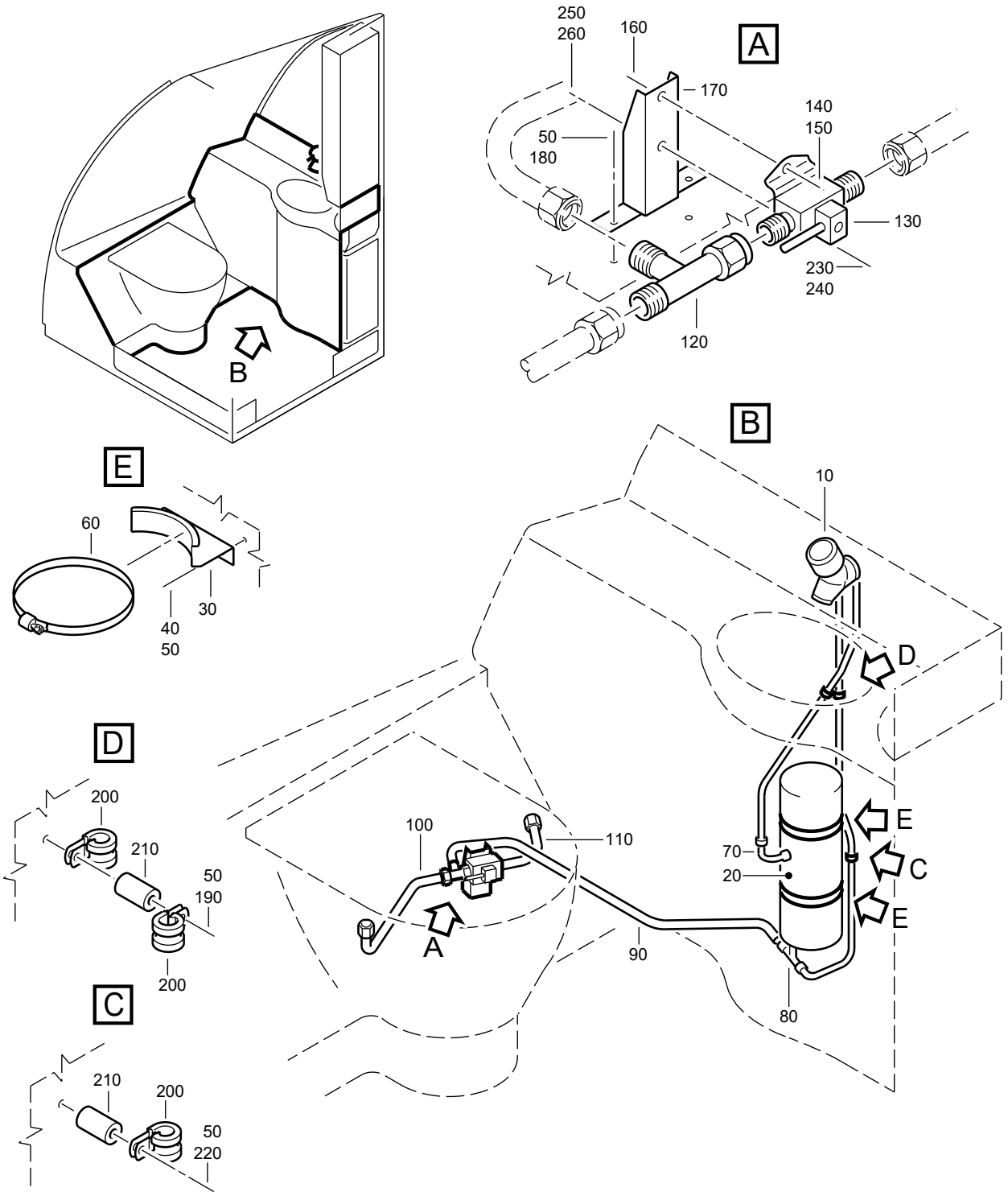

F_PL_254151_22_J_01_00

WATER SYSTEM-POTABLE
Figure 22J/EN254151SHEET22J01

FIG. ITEM	PART NUMBER	AIRLINE STOCK NUMBER	NOMENCLATURE 1234567	EFF CODE	UNITS PER ASSY
22J					
-001A	D2547161903081		. WATER SYSTEM-POTABLE NP POST SB 25-1742 used on 180D (25415101G) SEE 25-41-51-01G FOR NHA		RF
010A	2980332100000		. . FAUCET ASSY-WATER POST SB 25-1742 used on 001A		001
020A	24E507009G03		. . HEATER-WATER used on 001A		001
030A	A238100301-200		. . BRACKET used on 001A		002
040A	NAS1096-2-6		. . SCREW BUY PN NAS1801-08-6 used on 001A		004
050A	NAS1149CN832R		. . WASHER used on 001A		008
060A	ASNA0032-112		. . CLAMP used on 001A		002
070A	NAS1762J0606		. . ELBOW-REDUCER POST SB 25-1742 used on 001A		001
080A	NAS1764J080606		. . TEE used on 001A		001
090A	A238101004-000		. . TUBE used on 001A		001
100A	AE3663630H0092		. . HOSE used on 001A		001
110A	A238101001-000		. . TUBE used on 001A		001

- ITEM NOT ILLUSTRATED

FIG. ITEM	PART NUMBER	AIRLINE STOCK NUMBER	NOMENCLATURE 1234567	EFF CODE	UNITS PER ASSY
120A	NAS1763J080808		. . TEE used on 001A		001
130A	Z02HV08-1		. . VALVE-SHUTOFF used on 001A		001
140A	NAS1096-3-6		. . SCREW BUY PN NAS1801-3-6 used on 001A		001
150A	AN960C10L		. . WASHER BUY PN NAS1149C0332R used on 001A		001
160A	MS21042-3		. . NUT used on 001A		001
170A	A338100302-200		. . BRACKET used on 001A		001
180A	NAS1096-2-4		. . SCREW BUY PN NAS1801-08-4 used on 001A		002
190A	NAS1801-08-16		. . SCREW POST SB 25-1742 used on 001A		001
200A	MS21919WCH7		. . CLAMP POST SB 25-1742 BUY PN AS21919WCH07 used on 001A		003
210A	NSA5527-03-02		. . SPACER POST SB 25-1742 used on 001A		002
220A	NAS1801-08-14		. . SCREW POST SB 25-1742 used on 001A		001

- ITEM NOT ILLUSTRATED

FIG. ITEM	PART NUMBER	AIRLINE STOCK NUMBER	NOMENCLATURE 1234567	EFF CODE	UNITS PER ASSY
230A	NAS1096-3-16		. . SCREW BUY PN NAS1801-3-16 used on 001A		001
240A	ASNA0113-48ADL		. . WASHER used on 001A		001
250A	MS35338-158		. . WASHER-LOCK used on 001A		001
260A	NAS509-3		. . NUT used on 001A		001

- ITEM NOT ILLUSTRATED

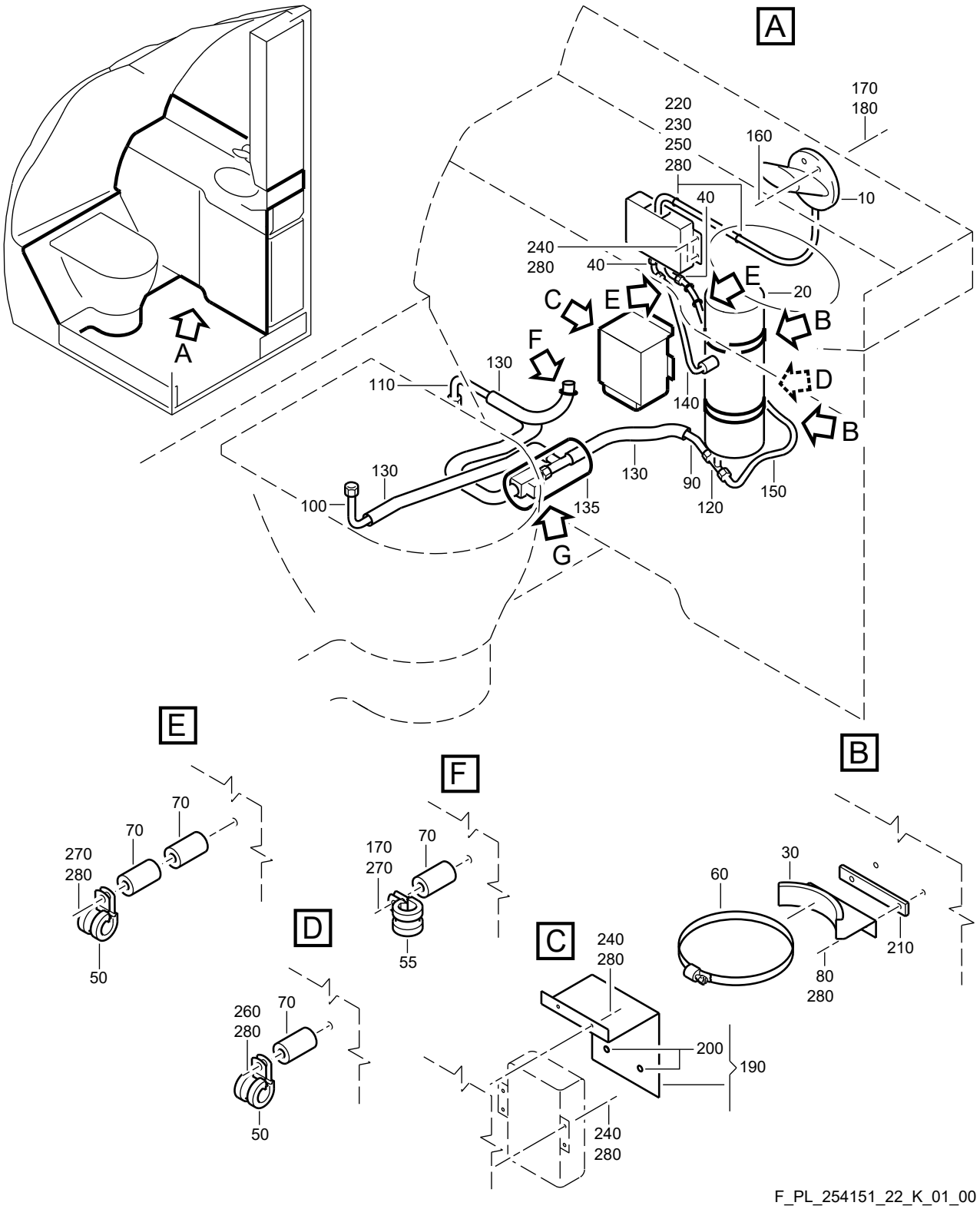

F_PL_254151_22_K_01_00

WATER SYSTEM-POTABLE
Figure 22K/EN254151SHEET22K01

G

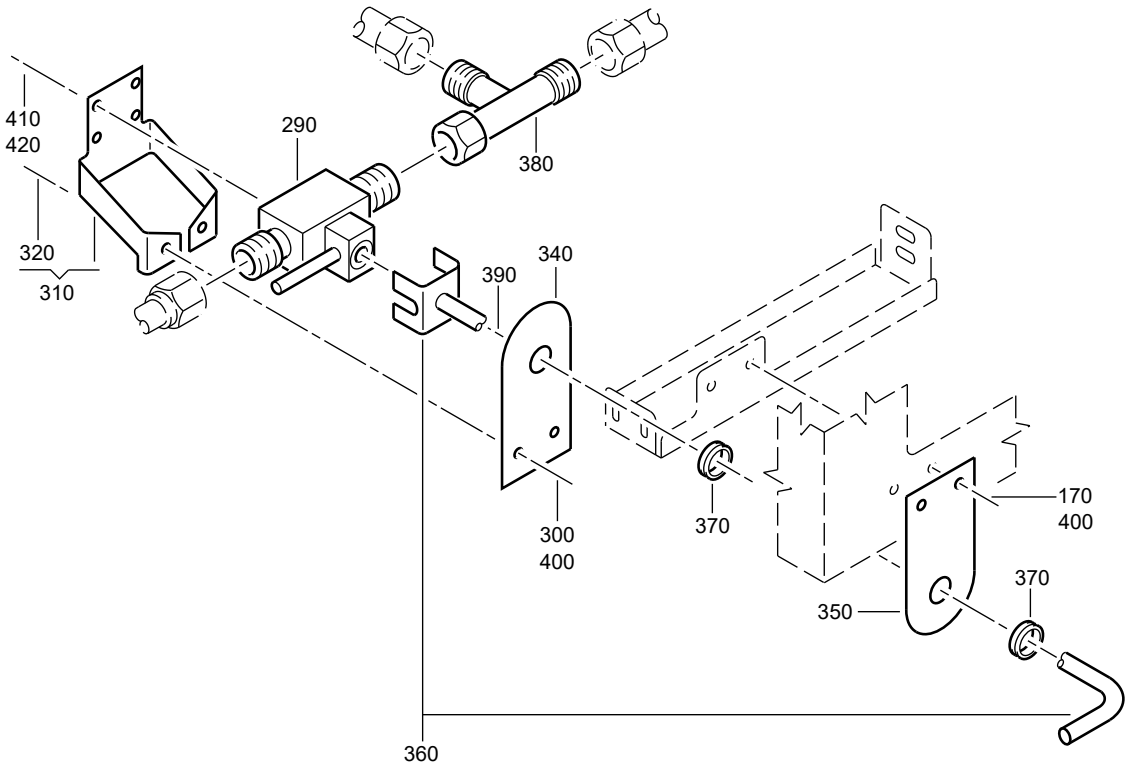

F_PL_254151_22_K_02_00

FIG. ITEM	PART NUMBER	AIRLINE STOCK NUMBER	NOMENCLATURE 1234567	EFF CODE	UNITS PER ASSY
22K					
-001A	D2547161202881		. WATER SYSTEM-POTABLE NP POST SB 25-1674 used on 180F (25415141M) SEE 25-41-51-41M FOR NHA		RF
-001B	D2547161203481		. WATER SYSTEM-POTABLE NP POST SB 25-1674 used on 180E (25415142N) SEE 25-41-51-42N FOR NHA		RF
010A	AR9262-3W1D599		. . FAUCET ASSY-WATER POST SB 25-1674 used on 001A, 001B		001
020A	24E507009G03		. . HEATER-WATER used on 001A, 001B		001
030A	A238100301-200		. . BRACKET used on 001A, 001B		002
040A	NAS1762J0606		. . ELBOW-REDUCER POST SB 25-1674 used on 001A, 001B		002
050A	MS21919WCH7		. . CLAMP BUY PN AS21919WCH07 used on 001A, 001B		003
055A	MS21919WCH8		. . CLAMP BUY PN AS21919WCH08 used on 001A, 001B		001
060A	ASNA0033-112		. . CLAMP used on 001A, 001B		002
070A	NSA5527-03-02		. . SPACER POST SB 25-1674 used on 001A, 001B		006

- ITEM NOT ILLUSTRATED

FIG. ITEM	PART NUMBER	AIRLINE STOCK NUMBER	NOMENCLATURE 1234567	EFF CODE	UNITS PER ASSY
080A	NAS1801-08-12		. . SCREW POST SB 25-1674 used on 001A, 001B		004
090A	AE3663630H0174		. . HOSE used on 001A, 001B		001
100A	AE6471H0187-266		. . HOSE used on 001A, 001B		001
110A	A238101008-004		. . TUBE used on 001A, 001B		001
120A	NAS1764J080606		. . TEE used on 001A, 001B		001
130A	ABS0616-1-08		. . INSULATION BUY PN ABS0616-1-08A used on 001A		003
-130B	ABS0616A1-08A		. . INSULATION used on 001B		003
135A	ABS0619-08-01		. . INSULATION used on 001A		001
135B	ABS0619A08C01		. . INSULATION used on 001B		001
140A	AE3663630G0097		. . HOSE POST SB 25-1674 used on 001A, 001B		001
150A	AE3663630G0207		. . HOSE POST SB 25-1674 used on 001A, 001B		001
160A	NAS1100E08-7		. . SCREW POST SB 25-1674 used on 001A, 001B		004

- ITEM NOT ILLUSTRATED

FIG. ITEM	PART NUMBER	AIRLINE STOCK NUMBER	NOMENCLATURE 1234567	EFF CODE	UNITS PER ASSY
170A	NAS1149CN832R		. . WASHER POST SB 25-1674 used on 001A, 001B		007
180A	MS21042-08		. . NUT POST SB 25-1674 used on 001A, 001B		004
190A	A338100302-018		. . COVER ASSY POST SB 25-1674 used on 001A, 001B		001
200A	66333493		. . . BUMPER BUY PN SJ5302TRANSPAR used on 190A		002
210A	A225400236-206		. . SPACER POST SB 25-1674 used on 001A, 001B		002
220A	MS21919WCH6		. . CLAMP POST SB 25-1674 BUY PN AS21919WCH06 used on 001A, 001B		002
230A	NSA5527-03-03		. . SPACER POST SB 25-1674 used on 001A, 001B		002
240A	NAS1801-08-5		. . SCREW POST SB 25-1674 used on 001A, 001B		009
250A	NAS1801-08-9		. . SCREW POST SB 25-1674 used on 001A, 001B		002
260A	NAS1801-08-14		. . SCREW POST SB 25-1674 used on 001A, 001B		001

- ITEM NOT ILLUSTRATED

FIG. ITEM	PART NUMBER	AIRLINE STOCK NUMBER	NOMENCLATURE 1234567	EFF CODE	UNITS PER ASSY
270A	NAS1801-08-24		. . SCREW POST SB 25-1674 used on 001A, 001B		003
280A	ASNA0113-40ADL		. . WASHER POST SB 25-1674 used on 001A, 001B		018
290A	GLS01-002-0000		. . VALVE-SHUTOFF used on 001A, 001B		001
300A	0-123-000700000		. . WASHER used on 001A, 001B		002
310A	A338100312-000		. . BRACKET-SHUTOFF VALVE used on 001A, 001B		001
320A	NAS1068C08		. . . NUT BUY PN MS21076L08N used on 310A		002
-330A	LN9199-2406G		. . . RIVET BUY PN DIN65399-2406GF used on 310A		004
340A	A338100312-202		. . BRACKET used on 001A, 001B		001
350A	A338100312-200		. . BRACKET used on 001A, 001B		001
360A	A338100312-004		. . ROD-SHUTOFF VALVE used on 001A, 001B		001
370A	LN9240-6X2		. . GROMMET used on 001A, 001B		002
380A	NAS1763J080808		. . TEE used on 001A, 001B		001

- ITEM NOT ILLUSTRATED

FIG. ITEM	PART NUMBER	AIRLINE STOCK NUMBER	NOMENCLATURE 1234567	EFF CODE	UNITS PER ASSY
390A	NSA5321-6		. . RING-RETAINING used on 001A, 001B		001
400A	NAS1102-08-12		. . SCREW used on 001A, 001B		004
410A	NAS1100-06-6		. . SCREW used on 001A, 001B		004
420A	NAS1149CN632R		. . WASHER used on 001A, 001B		004

- ITEM NOT ILLUSTRATED

THIS PAGE IS INTENTIONALLY LEFT BLANK

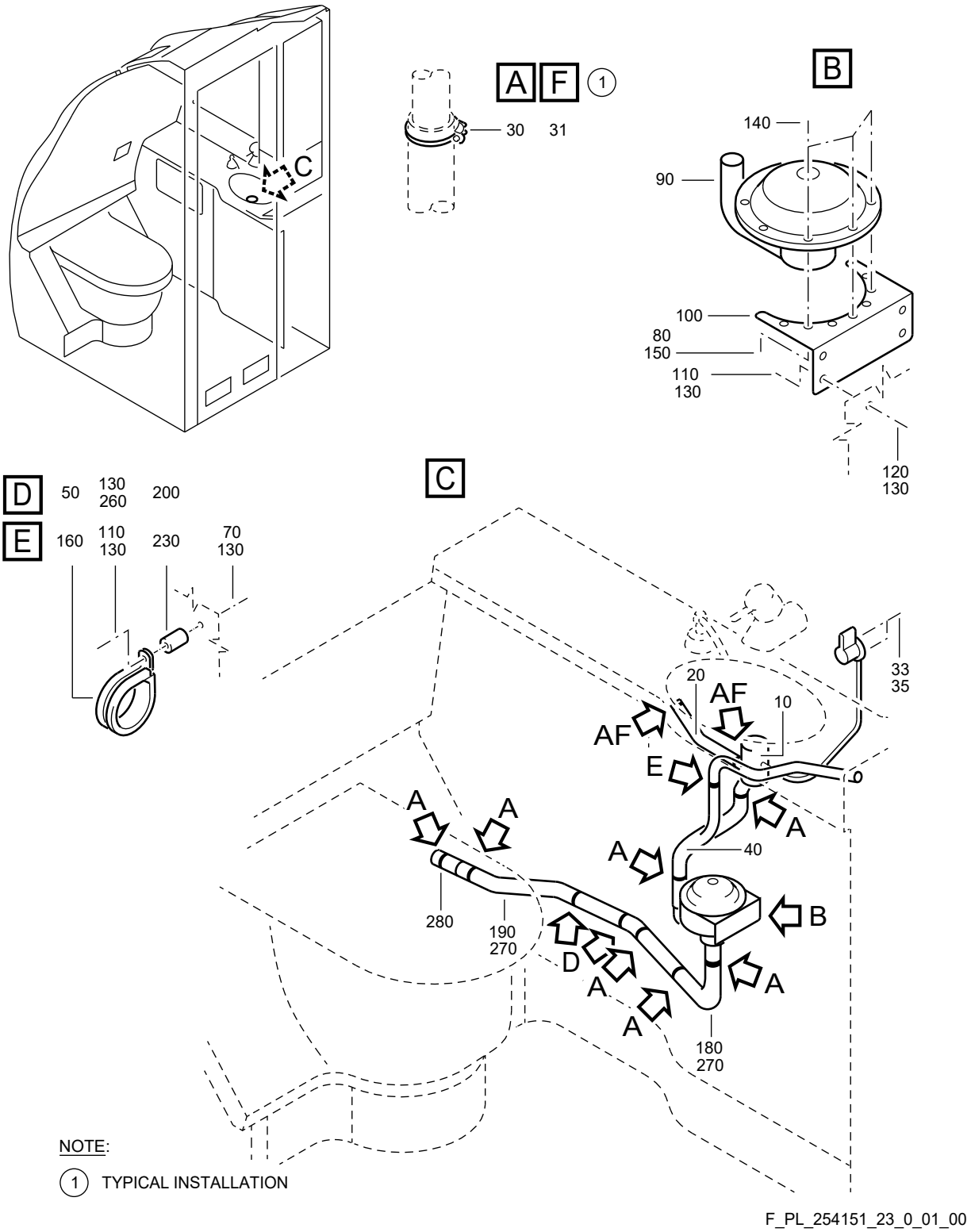

NOTE:

(1) TYPICAL INSTALLATION

F_PL_254151_23_0_01_00

FIG. ITEM	PART NUMBER	AIRLINE STOCK NUMBER	NOMENCLATURE 1234567	EFF CODE	UNITS PER ASSY
23 -001A	D2549010500082		. WATER SYSTEM-WASTE NP used on 190A (254151010), 190A (25415101A), 190A(25415101B), 190A (25415101D), 190A (25415101E), 190B(25415101F), 190D (25415141T) SEE 25-41-51-010 FOR NHA SEE 25-41-51-01A FOR NHA SEE 25-41-51-01B FOR NHA SEE 25-41-51-01D FOR NHA SEE 25-41-51-01E FOR NHA SEE 25-41-51-01F FOR NHA SEE 25-41-51-41T FOR NHA		RF

- ITEM NOT ILLUSTRATED

FIG. ITEM	PART NUMBER	AIRLINE STOCK NUMBER	NOMENCLATURE 1234567		EFF CODE	UNITS PER ASSY
-001B	D2549030500282		. WATER SYSTEM-WASTE PRE VSB A2-254-25-013 PRE VSB A2-254-25-059 used on 190B (254151010), 190B (25415101A), 190B(25415101B), 190A (25415101C), 190D (25415101D), 190B(25415101E), 190A (25415101F), 190B (25415101G), 190C(25415101H), 190C (25415101J), 190D (25415101K), 190D(25415101L), 190D (25415101M), 190C (25415101N) SEE 25-41-51-010 FOR NHA SEE 25-41-51-01A FOR NHA SEE 25-41-51-01B FOR NHA SEE 25-41-51-01C FOR NHA SEE 25-41-51-01D FOR NHA SEE 25-41-51-01E FOR NHA SEE 25-41-51-01F FOR NHA SEE 25-41-51-01G FOR NHA SEE 25-41-51-01H FOR NHA SEE 25-41-51-01J FOR NHA SEE 25-41-51-01K FOR NHA SEE 25-41-51-01L FOR NHA SEE 25-41-51-01M FOR NHA SEE 25-41-51-01N FOR NHA	NP		RF
-001C	D2549010505682		. WATER SYSTEM-WASTE PRE VSB A2-254-25-013 PRE VSB A2-254-25-032 used on 190C (25415101F), 190A (25415101H), 190C(25415101L) SEE 25-41-51-01F FOR NHA SEE 25-41-51-01H FOR NHA SEE 25-41-51-01L FOR NHA	NP		RF
-001D	D2549020600082		. WATER SYSTEM-WASTE used on 190B (25415101C) SEE 25-41-51-01C FOR NHA	NP		RF

- ITEM NOT ILLUSTRATED

FIG. ITEM	PART NUMBER	AIRLINE STOCK NUMBER	NOMENCLATURE 1234567		EFF CODE	UNITS PER ASSY
-001E	D2549030500882		. WATER SYSTEM-WASTE used on 190C (25415101A), 190C (25415101C), 190B (25415101D), 190E (25415101G), 190D (25415101H) SEE 25-41-51-01A FOR NHA SEE 25-41-51-01C FOR NHA SEE 25-41-51-01D FOR NHA SEE 25-41-51-01G FOR NHA SEE 25-41-51-01H FOR NHA	NP		RF
-001F	D2549020602882		. WATER SYSTEM-WASTE used on 190C (25415101G) SEE 25-41-51-01G FOR NHA	NP		RF
-001G	D2549030500282		. WATER SYSTEM-WASTE POST VSB A2-254-25-059 used on 190C (25415101E), 190E (25415101F) SEE 25-41-51-01E FOR NHA SEE 25-41-51-01F FOR NHA	NP		RF
-001H	D2549030500282		. WATER SYSTEM-WASTE POST VSB A2-254-25-013 used on 190D (25415101C) SEE 25-41-51-01C FOR NHA	NP		RF
-001J	D2549010505682		. WATER SYSTEM-WASTE POST VSB A2-254-25-013 used on 190F (25415101H) SEE 25-41-51-01H FOR NHA	NP		RF
-001K	D2549010505682		. WATER SYSTEM-WASTE POST VSB A2-254-25-032 used on 190G (25415101H), 190E (25415101L) SEE 25-41-51-01H FOR NHA SEE 25-41-51-01L FOR NHA	NP		RF

- ITEM NOT ILLUSTRATED

FIG. ITEM	PART NUMBER	AIRLINE STOCK NUMBER	NOMENCLATURE 1234567	EFF CODE	UNITS PER ASSY
010A	D02A00		. . DRAIN ASSY used on 001A, 001B, 001D, 001E, 001G		001
-010B	D01F00		. . DRAIN ASSY PRE VSB A2-254-25-013 PRE VSB A2-254-25-032 used on 001C, 001F		001
-010C	7800258		. . DRAIN ASSY POST VSB A2-254-25-013 POST VSB A2-254-25-032 used on 001H, 001J, 001K		001
020A	D3837105520000		. . HOSE PRE VSB A2-254-25-032 used on 001A, 001B, 001C, 001D, 001E, 001F, 001G		001
030A	ASNA0032-028		. . CLAMP USE AS REQUIRED USAGE RANGE FROM 8 TO 9 PRE VSB A2-254-25-032 used on 001A, 001B, 001C, 001D, 001E, 001F, 001G, 001H, 001J		AR
-030B	ASNA0032-028		. . CLAMP used on 001K		005
031A	ASNA0032-028		. . CLAMP PRE VSB A2-254-25-013 used on 001A, 001B, 001C, 001D, 001E, 001F, 001G		002
-031B	ASNA0033-036		. . CLAMP POST VSB A2-254-25-013 used on 001H, 001J		003

- ITEM NOT ILLUSTRATED

FIG. ITEM	PART NUMBER	AIRLINE STOCK NUMBER	NOMENCLATURE 1234567	EFF CODE	UNITS PER ASSY
-031C	ASNA0033-036		. . CLAMP POST VSB A2-254-25-032 used on 001K		004
033A	NAS1096-3-6		. . SCREW BUY PN NAS1801-3-6 used on 001C, 001F, 001J, 001K		002
035A	AN960C10L		. . WASHER BUY PN NAS1149C0332R used on 001C, 001F, 001J, 001K		002
040A	A3-381-0002-01		. . HOSE PRE VSB A2-254-25-013 PRE VSB A2-254-25-032 used on 001A, 001B, 001C, 001D, 001E, 001F, 001G		001
-040B	A338300010-236		. . HOSE POST VSB A2-254-25-013 POST VSB A2-254-25-032 used on 001H, 001J, 001K		001
050A	MS21919WCH16		. . CLAMP BUY PN AS21919WCH16 used on 001A, 001B, 001C, 001D, 001E, 001F, 001G, 001H, 001J, 001K		002
070A	NAS1102-08-20		. . SCREW PRE VSB A2-254-25-032 used on 001A, 001B, 001C, 001D, 001E, 001F, 001G, 001H, 001J		001
080A	MS21042-3		. . NUT used on 001A, 001B, 001C, 001D, 001E, 001F, 001G, 001H, 001J, 001K		003

- ITEM NOT ILLUSTRATED

FIG. ITEM	PART NUMBER	AIRLINE STOCK NUMBER	NOMENCLATURE 1234567	EFF CODE	UNITS PER ASSY
090A	ZCV241		. . VALVE-DRAIN PRE VSB A2-254-25-013 PRE VSB A2-254-25-032 used on 001A, 001B, 001C, 001D, 001E, 001F, 001G		001
-090B	FRH340003H		. . VALVE-DRAIN POST VSB A2-254-25-013 POST VSB A2-254-25-032 used on 001H, 001J, 001K		001
100A	A238100300-200		. . BRACKET used on 001A, 001B, 001C, 001D, 001E, 001F, 001G, 001H, 001J, 001K		001
110A	MS21042-08		. . NUT used on 001A, 001B, 001C, 001D, 001E, 001F, 001G, 001H, 001J, 001K		005
120A	NAS1102-08-8		. . SCREW used on 001A, 001B, 001C, 001D, 001E, 001F, 001G, 001H, 001J, 001K		004
130A	AN960C8		. . WASHER BUY PN NAS1149CN832R PRE VSB A2-254-25-032 used on 001A, 001B, 001C, 001D, 001E, 001F, 001G, 001H, 001J		011
-130B	AN960C8		. . WASHER POST VSB A2-254-25-032 used on 001K		006
-132A	NAS1149CN832R		. . WASHER POST VSB A2-254-25-032 used on 001K		005

- ITEM NOT ILLUSTRATED

FIG. ITEM	PART NUMBER	AIRLINE STOCK NUMBER	NOMENCLATURE 1234567	EFF CODE	UNITS PER ASSY
140A	NAS1096-3-10		. . SCREW BUY PN NAS1801-3-10 PRE VSB A2-254-25-032 used on 001A, 001B, 001C, 001D, 001E, 001F, 001G, 001H, 001J		003
-140B	NAS1801-3-22		. . SCREW POST VSB A2-254-25-032 used on 001K		003
-141A	NSA5527-03-06		. . SPACER POST VSB A2-254-25-032 used on 001K		003
150A	AN960C10L		. . WASHER BUY PN NAS1149C0332R PRE VSB A2-254-25-032 used on 001A, 001B, 001C, 001D, 001E, 001F, 001G, 001H, 001J		003
-150B	ASNA0113-48ADL		. . WASHER POST VSB A2-254-25-032 used on 001K		006
160A	MS21919WCH12		. . CLAMP BUY PN AS21919WCH12 PRE VSB A2-254-25-032 used on 001A, 001B, 001C, 001D, 001E, 001F, 001G		001
180A	A3837232923000		. . HOSE used on 001A, 001B, 001C, 001D, 001E, 001F, 001G, 001H, 001J, 001K		001

- ITEM NOT ILLUSTRATED

FIG. ITEM	PART NUMBER	AIRLINE STOCK NUMBER	NOMENCLATURE 1234567	EFF CODE	UNITS PER ASSY
190A	A238301000-000		. . TUBE used on 001A, 001B, 001C, 001D, 001E, 001F, 001G, 001H, 001J, 001K		001
200A	NSA5527-03-02		. . SPACER used on 001A, 001B, 001C, 001D, 001E, 001F, 001G, 001H, 001J, 001K		002
230A	NSA5527-03-08		. . SPACER PRE VSB A2-254-25-032 used on 001A, 001B, 001C, 001D, 001E, 001F, 001G		001
-240A	NSA935401-03		. . TIE-CABLE used on 001A, 001B, 001C, 001D, 001E, 001F, 001G, 001H, 001J, 001K		001
-250A	NSA935405-01		. . MOUNT used on 001A, 001B, 001C, 001D, 001E, 001F, 001G, 001H, 001J, 001K		001
260A	NAS1096-2-16		. . SCREW BUY PN NAS1801-08-16 used on 001A, 001B, 001C, 001D, 001E, 001F, 001G, 001H, 001J, 001K		002
270A	ABS0616-1-16		. . INSULATION BUY PN ABS0616-1-16A used on 001E, 001F		002
-270B	ABS0616A1-16A		. . INSULATION POST VSB A2-254-25-059 used on 001G		AR

- ITEM NOT ILLUSTRATED

FIG. ITEM	PART NUMBER	AIRLINE STOCK NUMBER	NOMENCLATURE 1234567	EFF CODE	UNITS PER ASSY
280A	ABS0619-12-02		. . INSULATION used on 001E, 001F		AR

- ITEM NOT ILLUSTRATED

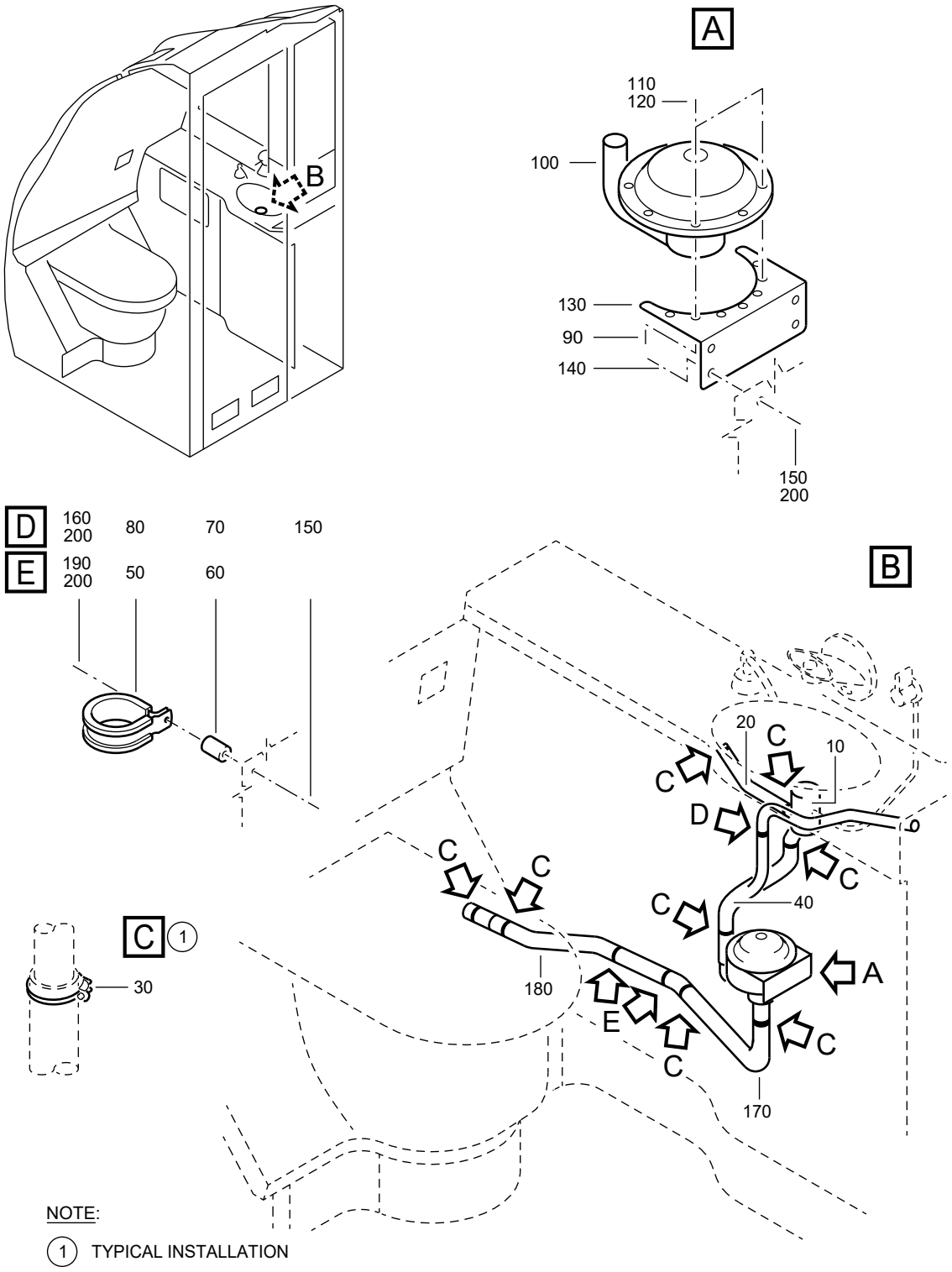

F_PL_254151_23_A_01_00

WATER SYSTEM-WASTE
Figure 23A/EN254151SHEET23A01

FIG. ITEM	PART NUMBER	AIRLINE STOCK NUMBER	NOMENCLATURE 1234567	EFF CODE	UNITS PER ASSY
23A					
-001A	D2549010508082		. WATER SYSTEM-WASTE NP used on 190A (25415101G) SEE 25-41-51-01G FOR NHA		RF
010A	D02A00		. . DRAIN ASSY used on 001A		001
020A	D3837105520000		. . HOSE used on 001A		001
030A	ASNA0032-028		. . CLAMP used on 001A		008
040A	A3-381-0002-01		. . HOSE used on 001A		001
050A	MS21919WCH16		. . CLAMP BUY PN AS21919WCH16 used on 001A		002
060A	NSA5527-03-02		. . SPACER used on 001A		002
070A	NSA5527-03-08		. . SPACER used on 001A		001
080A	MS21919WCH12		. . CLAMP BUY PN AS21919WCH12 used on 001A		001
090A	MS21042-3		. . NUT used on 001A		002
100A	ZCV241		. . VALVE-DRAIN used on 001A		001
110A	NAS1096-3-10		. . SCREW BUY PN NAS1801-3-10 used on 001A		002

- ITEM NOT ILLUSTRATED

FIG. ITEM	PART NUMBER	AIRLINE STOCK NUMBER	NOMENCLATURE 1234567	EFF CODE	UNITS PER ASSY
120A	NAS1149C0332R		. . WASHER used on 001A		002
130A	A238100300-200		. . BRACKET used on 001A		001
140A	NAS1102-08-8		. . SCREW used on 001A		004
150A	MS21042-08		. . NUT used on 001A		005
160A	NAS1102-08-20		. . SCREW used on 001A		001
170A	A3837232923000		. . HOSE used on 001A		001
180A	A238301000-000		. . TUBE used on 001A		001
190A	NAS1096-2-16		. . SCREW BUY PN NAS1801-08-16 used on 001A		002
200A	NAS1149CN832R		. . WASHER used on 001A		007
-220A	NSA935401-03		. . TIE-CABLE used on 001A		001
-230A	NSA935405-01		. . MOUNT used on 001A		001

- ITEM NOT ILLUSTRATED

THIS PAGE IS INTENTIONALLY LEFT BLANK

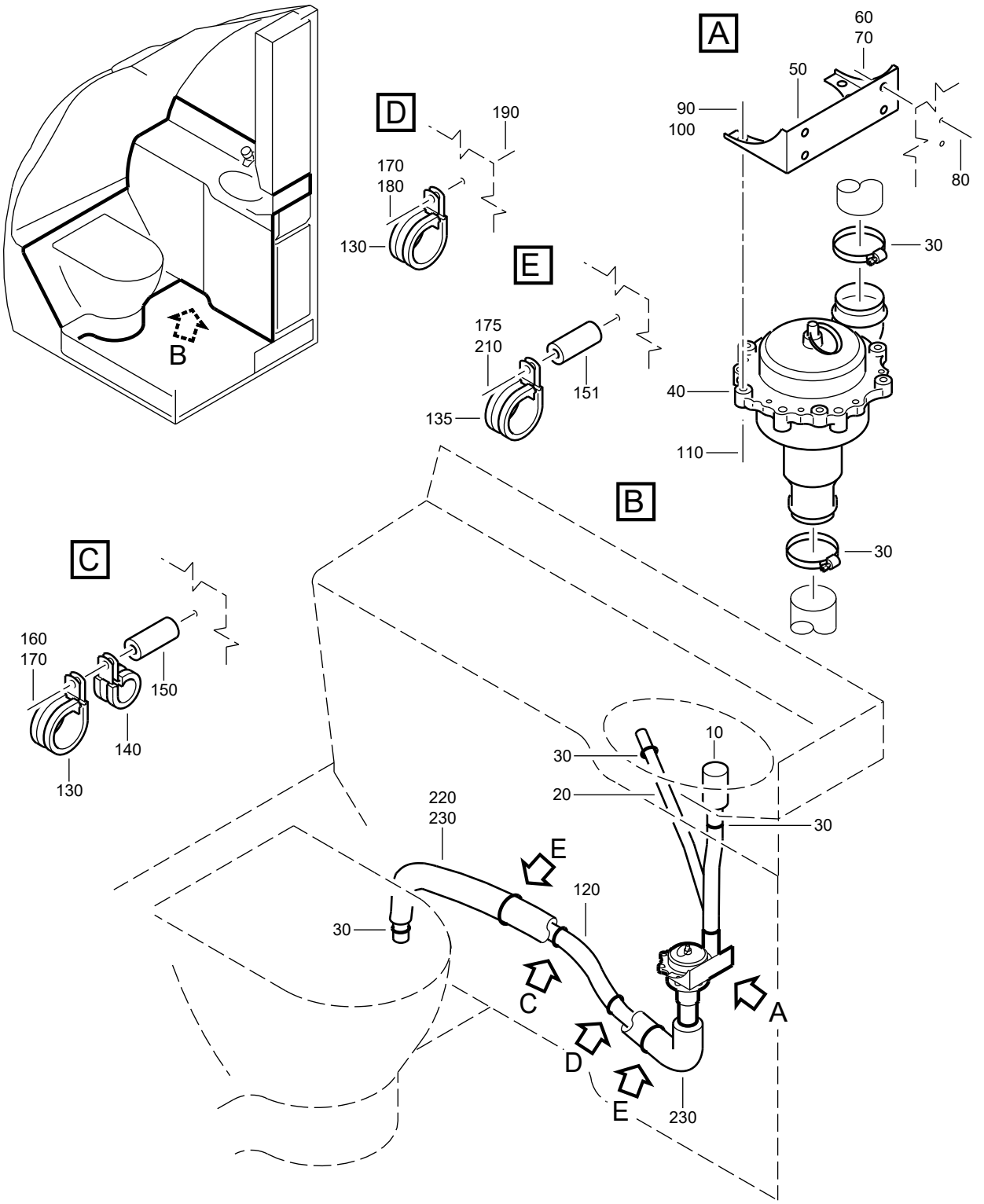

F_PL_254151_23_B_01_01

FIG. ITEM	PART NUMBER	AIRLINE STOCK NUMBER	NOMENCLATURE 1234567	EFF CODE	UNITS PER ASSY
23B -001A	D2549030504882		. WATER SYSTEM-WASTE NP used on 190A (25415101J), 190B (25415101L), 190B (25415101N),190C (25415101P), 190E (25415101Q), 190A (25415101S), 190A (25415101T),190A (25415101V), 190A(25415101W), 190B (25415101X), 190D (25415101Y),190B(25415101Z), 190B (254151410), 190A (25415141A), 190F (25415141B),190B (25415141C), 190B (25415141D), 190B (25415141F), 190C (25415141G),190B (25415141H), 190B(25415141J), 190B (25415141K), 190C (25415141M),190D(25415141N), 190B (25415141P), 190C (25415141R), 190B (25415141S),190C (25415141T), 190A (25415141U), 190C (25415141V), 190A (25415141X),190C (25415141Y), 190C(25415141Z), 190A (25415142B), 190C (25415142D),190D(25415142E), 190B (25415142F), 190A (25415142G), 190A (25415142H),190B (25415142J), 190D (25415142K), 190C (25415142L), 190C (25415142M),190E (25415142N), 190A(25415142P), 190B (25415142Q), 190B (25415142T),190B(25415142U) SEE 25-41-51-01J FOR NHA SEE 25-41-51-01L FOR NHA		RF

- ITEM NOT ILLUSTRATED

FIG. ITEM	PART NUMBER	AIRLINE STOCK NUMBER	NOMENCLATURE 1234567	EFF CODE	UNITS PER ASSY
			SEE 25-41-51-01N FOR NHA SEE 25-41-51-01P FOR NHA SEE 25-41-51-01Q FOR NHA SEE 25-41-51-01S FOR NHA SEE 25-41-51-01T FOR NHA SEE 25-41-51-01V FOR NHA SEE 25-41-51-01W FOR NHA SEE 25-41-51-01X FOR NHA SEE 25-41-51-01Y FOR NHA SEE 25-41-51-01Z FOR NHA SEE 25-41-51-410 FOR NHA SEE 25-41-51-41A FOR NHA SEE 25-41-51-41B FOR NHA SEE 25-41-51-41C FOR NHA SEE 25-41-51-41D FOR NHA SEE 25-41-51-41F FOR NHA SEE 25-41-51-41G FOR NHA SEE 25-41-51-41H FOR NHA SEE 25-41-51-41J FOR NHA SEE 25-41-51-41K FOR NHA SEE 25-41-51-41M FOR NHA SEE 25-41-51-41N FOR NHA SEE 25-41-51-41P FOR NHA SEE 25-41-51-41R FOR NHA SEE 25-41-51-41S FOR NHA SEE 25-41-51-41T FOR NHA SEE 25-41-51-41U FOR NHA SEE 25-41-51-41V FOR NHA SEE 25-41-51-41X FOR NHA SEE 25-41-51-41Y FOR NHA SEE 25-41-51-41Z FOR NHA SEE 25-41-51-42B FOR NHA SEE 25-41-51-42D FOR NHA SEE 25-41-51-42E FOR NHA SEE 25-41-51-42F FOR NHA SEE 25-41-51-42G FOR NHA SEE 25-41-51-42H FOR NHA SEE 25-41-51-42J FOR NHA SEE 25-41-51-42K FOR NHA SEE 25-41-51-42L FOR NHA		

- ITEM NOT ILLUSTRATED

FIG. ITEM	PART NUMBER	AIRLINE STOCK NUMBER	NOMENCLATURE 1234567	EFF CODE	UNITS PER ASSY
			SEE 25-41-51-42M FOR NHA SEE 25-41-51-42N FOR NHA SEE 25-41-51-42P FOR NHA SEE 25-41-51-42Q FOR NHA SEE 25-41-51-42T FOR NHA SEE 25-41-51-42U FOR NHA		

- ITEM NOT ILLUSTRATED

FIG. ITEM	PART NUMBER	AIRLINE STOCK NUMBER	NOMENCLATURE 1234567	EFF CODE	UNITS PER ASSY
-001B	D2549010511082		. WATER SYSTEM-WASTE NP PRE VSB A2-254-25-015 PRE VSB A2-254-25-029 PRE VSB A2-254-25-035 PRE VSB A2-254-25-077 PRE VSB A2-254-25-108 used on 190B (25415101J), 190A (25415101K), 190A (25415101L),190A (25415101M), 190A (25415101N), 190B (25415101P), 190C (25415101Q),190A (25415101R), 190B(25415101S), 190B (25415101T), 190A (25415101U),190B(25415101V), 190C (25415101W), 190A (25415101X), 190C (25415101Y),190A (25415101Z), 190A (254151410), 190B (25415141A), 190A (25415141B),190A (25415141C), 190A(25415141D), 190A (25415141F), 190A (25415141G),190A(25415141H), 190A (25415141J), 190A (25415141K), 190A (25415141L),190A (25415141M), 190B (25415141N), 190A (25415141P), 190B (25415141R),190A (25415141S), 190A(25415141T), 190B (25415141U), 190A (25415141V),190B(25415141W), 190B (25415141X), 190A (25415141Y), 190A (25415141Z),190B (254151420), 190A (25415142A), 190B (25415142B), 190B (25415142D),190A (25415142E), 190A(25415142F), 190C		RF

- ITEM NOT ILLUSTRATED

FIG. ITEM	PART NUMBER	AIRLINE STOCK NUMBER	NOMENCLATURE 1234567	EFF CODE	UNITS PER ASSY
			(25415142G), 190C (25415142H),190A(25415142J), 190E (25415142K), 190B (25415142M), 190B (25415142N),190B (25415142P), 190A (25415142Q), 190C (25415142R), 190A (25415142S),190A (25415142T), 190A(25415142U) SEE 25-41-51-01J FOR NHA SEE 25-41-51-01K FOR NHA SEE 25-41-51-01L FOR NHA SEE 25-41-51-01M FOR NHA SEE 25-41-51-01N FOR NHA SEE 25-41-51-01P FOR NHA SEE 25-41-51-01Q FOR NHA SEE 25-41-51-01R FOR NHA SEE 25-41-51-01S FOR NHA SEE 25-41-51-01T FOR NHA SEE 25-41-51-01U FOR NHA SEE 25-41-51-01V FOR NHA SEE 25-41-51-01W FOR NHA SEE 25-41-51-01X FOR NHA SEE 25-41-51-01Y FOR NHA SEE 25-41-51-01Z FOR NHA SEE 25-41-51-410 FOR NHA SEE 25-41-51-41A FOR NHA SEE 25-41-51-41B FOR NHA SEE 25-41-51-41C FOR NHA SEE 25-41-51-41D FOR NHA SEE 25-41-51-41F FOR NHA SEE 25-41-51-41G FOR NHA SEE 25-41-51-41H FOR NHA SEE 25-41-51-41J FOR NHA SEE 25-41-51-41K FOR NHA SEE 25-41-51-41L FOR NHA SEE 25-41-51-41M FOR NHA SEE 25-41-51-41N FOR NHA SEE 25-41-51-41P FOR NHA SEE 25-41-51-41R FOR NHA		

- ITEM NOT ILLUSTRATED

FIG. ITEM	PART NUMBER	AIRLINE STOCK NUMBER	NOMENCLATURE 1234567	EFF CODE	UNITS PER ASSY
			SEE 25-41-51-41S FOR NHA SEE 25-41-51-41T FOR NHA SEE 25-41-51-41U FOR NHA SEE 25-41-51-41V FOR NHA SEE 25-41-51-41W FOR NHA SEE 25-41-51-41X FOR NHA SEE 25-41-51-41Y FOR NHA SEE 25-41-51-41Z FOR NHA SEE 25-41-51-420 FOR NHA SEE 25-41-51-42A FOR NHA SEE 25-41-51-42B FOR NHA SEE 25-41-51-42D FOR NHA SEE 25-41-51-42E FOR NHA SEE 25-41-51-42F FOR NHA SEE 25-41-51-42G FOR NHA SEE 25-41-51-42H FOR NHA SEE 25-41-51-42J FOR NHA SEE 25-41-51-42K FOR NHA SEE 25-41-51-42M FOR NHA SEE 25-41-51-42N FOR NHA SEE 25-41-51-42P FOR NHA SEE 25-41-51-42Q FOR NHA SEE 25-41-51-42R FOR NHA SEE 25-41-51-42S FOR NHA SEE 25-41-51-42T FOR NHA SEE 25-41-51-42U FOR NHA		

- ITEM NOT ILLUSTRATED

FIG. ITEM	PART NUMBER	AIRLINE STOCK NUMBER	NOMENCLATURE 1234567	EFF CODE	UNITS PER ASSY
-001C	D2549020506282		. WATER SYSTEM-WASTE NP used on 190D (25415101J), 190A (25415101P), 190D (25415101Q),190E (25415101T), 190D (25415101W), 190B (25415101Y), 190E (25415141B),190D (25415141G), 190C(25415141H), 190D (25415141M), 190C (25415141N),190D(25415141W), 190D (25415141X) SEE 25-41-51-01J FOR NHA SEE 25-41-51-01P FOR NHA SEE 25-41-51-01Q FOR NHA SEE 25-41-51-01T FOR NHA SEE 25-41-51-01W FOR NHA SEE 25-41-51-01Y FOR NHA SEE 25-41-51-41B FOR NHA SEE 25-41-51-41G FOR NHA SEE 25-41-51-41H FOR NHA SEE 25-41-51-41M FOR NHA SEE 25-41-51-41N FOR NHA SEE 25-41-51-41W FOR NHA SEE 25-41-51-41X FOR NHA		RF

- ITEM NOT ILLUSTRATED

FIG. ITEM	PART NUMBER	AIRLINE STOCK NUMBER	NOMENCLATURE 1234567	EFF CODE	UNITS PER ASSY
-001D	D2549030506082		. WATER SYSTEM-WASTE NP used on 190A (25415101Q), 190D (25415101S), 190C (25415101U),190C (25415101V), 190C (25415101Z), 190C (25415141B), 190C (25415141D),190B (25415141G), 190C(25415141K) SEE 25-41-51-01Q FOR NHA SEE 25-41-51-01S FOR NHA SEE 25-41-51-01U FOR NHA SEE 25-41-51-01V FOR NHA SEE 25-41-51-01Z FOR NHA SEE 25-41-51-41B FOR NHA SEE 25-41-51-41D FOR NHA SEE 25-41-51-41G FOR NHA SEE 25-41-51-41K FOR NHA		RF
-001E	D2549030504082		. WATER SYSTEM-WASTE NP used on 190E (25415101J), 190C (25415101M), 190E (25415101P),190C (25415101S), 190D (25415101T), 190B (25415101U), 190E (25415101W),190C (25415101X), 190A(25415101Y), 190C (254151410), 190D (25415141B) SEE 25-41-51-01J FOR NHA SEE 25-41-51-01M FOR NHA SEE 25-41-51-01P FOR NHA SEE 25-41-51-01S FOR NHA SEE 25-41-51-01T FOR NHA SEE 25-41-51-01U FOR NHA SEE 25-41-51-01W FOR NHA SEE 25-41-51-01X FOR NHA SEE 25-41-51-01Y FOR NHA SEE 25-41-51-410 FOR NHA SEE 25-41-51-41B FOR NHA		RF

- ITEM NOT ILLUSTRATED

FIG. ITEM	PART NUMBER	AIRLINE STOCK NUMBER	NOMENCLATURE 1234567		EFF CODE	UNITS PER ASSY
-001F	D2549020507282		. WATER SYSTEM-WASTE used on 190E (25415101V), 190C (25415141A), 190F (25415141G),190C (25415141J), 190D (25415141K), 190B (25415141L), 190B (25415141M),190C (25415141P), 190C(25415141S), 190C (25415141U), 190B (25415141V),190A(25415141W), 190E (25415141Y), 190B (25415141Z) SEE 25-41-51-01V FOR NHA SEE 25-41-51-41A FOR NHA SEE 25-41-51-41G FOR NHA SEE 25-41-51-41J FOR NHA SEE 25-41-51-41K FOR NHA SEE 25-41-51-41L FOR NHA SEE 25-41-51-41M FOR NHA SEE 25-41-51-41P FOR NHA SEE 25-41-51-41S FOR NHA SEE 25-41-51-41U FOR NHA SEE 25-41-51-41V FOR NHA SEE 25-41-51-41W FOR NHA SEE 25-41-51-41Y FOR NHA SEE 25-41-51-41Z FOR NHA	NP		RF
-001G	D2549010514082		. WATER SYSTEM-WASTE used on 190D (25415101P) SEE 25-41-51-01P FOR NHA	NP		RF

- ITEM NOT ILLUSTRATED

FIG. ITEM	PART NUMBER	AIRLINE STOCK NUMBER	NOMENCLATURE 1234567	EFF CODE	UNITS PER ASSY
-001H	D2549020605682		. WATER SYSTEM-WASTE NP used on 190B (25415101K), 190B (25415101M), 190B (25415101Q),190C (25415101T), 190D (25415101V), 190B (25415101W), 190D (25415101Z),190E (25415141G), 190E(25415141M), 190A (25415141N), 200A (25415141Q),190B(25415141T), 190C (25415141W), 190C (25415141X) SEE 25-41-51-01K FOR NHA SEE 25-41-51-01M FOR NHA SEE 25-41-51-01Q FOR NHA SEE 25-41-51-01T FOR NHA SEE 25-41-51-01V FOR NHA SEE 25-41-51-01W FOR NHA SEE 25-41-51-01Z FOR NHA SEE 25-41-51-41G FOR NHA SEE 25-41-51-41M FOR NHA SEE 25-41-51-41N FOR NHA SEE 25-41-51-41Q FOR NHA SEE 25-41-51-41T FOR NHA SEE 25-41-51-41W FOR NHA SEE 25-41-51-41X FOR NHA		RF
-001J	D2549010610282		. WATER SYSTEM-WASTE NP used on 190E (25415141N), 190C (254151420) SEE 25-41-51-41N FOR NHA SEE 25-41-51-420 FOR NHA		RF

- ITEM NOT ILLUSTRATED

FIG. ITEM	PART NUMBER	AIRLINE STOCK NUMBER	NOMENCLATURE 1234567	EFF CODE	UNITS PER ASSY
-001K	D2549030402082		. WATER SYSTEM-WASTE NP used on 190E (25415141X), 190A (254151420), 190E (25415142E),190F (25415142N) SEE 25-41-51-41X FOR NHA SEE 25-41-51-420 FOR NHA SEE 25-41-51-42E FOR NHA SEE 25-41-51-42N FOR NHA		RF
-001L	D2549030405082		. WATER SYSTEM-WASTE NP used on 190F (25415101V), 190B (25415141Y), 190D (25415141Z),190D (254151420), 190B (25415142A), 190C (25415142B), 190A (25415142D),190C (25415142E), 190C(25415142F), 190D (25415142G), 190B (25415142H),190C(25415142K), 190B (25415142L), 190D (25415142N), 190C (25415142Q),190B (25415142R), 190C (25415142T) SEE 25-41-51-01V FOR NHA SEE 25-41-51-41Y FOR NHA SEE 25-41-51-41Z FOR NHA SEE 25-41-51-420 FOR NHA SEE 25-41-51-42A FOR NHA SEE 25-41-51-42B FOR NHA SEE 25-41-51-42D FOR NHA SEE 25-41-51-42E FOR NHA SEE 25-41-51-42F FOR NHA SEE 25-41-51-42G FOR NHA SEE 25-41-51-42H FOR NHA SEE 25-41-51-42K FOR NHA SEE 25-41-51-42L FOR NHA SEE 25-41-51-42N FOR NHA SEE 25-41-51-42Q FOR NHA SEE 25-41-51-42R FOR NHA SEE 25-41-51-42T FOR NHA		RF

- ITEM NOT ILLUSTRATED

FIG. ITEM	PART NUMBER	AIRLINE STOCK NUMBER	NOMENCLATURE 1234567		EFF CODE	UNITS PER ASSY
-001M	D2547161202282		. WATER SYSTEM-WASTE POST SB 38-1077 used on 190G (25415141X) SEE 25-41-51-41X FOR NHA	NP		RF
-001N	R22540119900082		. WATER SYSTEM-WASTE POST VSB A2-254-25-015 POST VSB A2-254-25-035 used on 190H (25415141X), 190C (25415142A) SEE 25-41-51-41X FOR NHA SEE 25-41-51-42A FOR NHA	NP		RF
-001P	R22540167600082		. WATER SYSTEM-WASTE POST VSB A2-254-25-029 used on 190D (25415142H) SEE 25-41-51-42H FOR NHA	NP		RF
-001Q	R22540162900282		. WATER SYSTEM-WASTE POST VSB A2-254-25-077 used on 190F (25415141P) SEE 25-41-51-41P FOR NHA	NP		RF
-001R	R22540114501482		. WATER SYSTEM-WASTE POST VSB A2-254-25-108 used on 190C (25415141C), 190E (25415141R) SEE 25-41-51-41C FOR NHA SEE 25-41-51-41R FOR NHA	NP		RF
010A	7800258		. . DRAINASSY POST SB 25-1674 used on 001A, 001D, 001G, 001H, 001J, 001K			001
-010B	7800259		. . DRAINASSY used on 001B, 001C, 001E, 001F, 001L, 001M, 001N, 001P, 001Q, 001R			001

- ITEM NOT ILLUSTRATED

FIG. ITEM	PART NUMBER	AIRLINE STOCK NUMBER	NOMENCLATURE 1234567	EFF CODE	UNITS PER ASSY
020A	A338300010-236		. . HOSE used on 001A, 001B, 001C, 001D, 001E, 001F, 001G, 001H, 001J, 001K, 001L, 001M, 001N, 001P, 001Q, 001R		001
030A	ASNA0033-036		. . CLAMP used on 001A, 001B, 001C, 001D, 001E, 001F, 001G, 001H, 001J, 001K, 001L, 001M, 001N, 001P, 001Q, 001R		005
040A	FRH340003H		. . VALVE-DRAIN used on 001A, 001B, 001C, 001D, 001E, 001F, 001G, 001H, 001J, 001K, 001L, 001M, 001N, 001P, 001Q, 001R		001
050A	A238100300-200		. . BRACKET used on 001A, 001B, 001C, 001D, 001E, 001F, 001G, 001H, 001J, 001K, 001L, 001M, 001N, 001P, 001Q, 001R		001
060A	NAS1102-08-8		. . SCREW used on 001A, 001B, 001C, 001D, 001E, 001F, 001G, 001H, 001J, 001K, 001L, 001M, 001N, 001P, 001Q, 001R		004
070A	NAS1149CN832R		. . WASHER used on 001A, 001B, 001C, 001D, 001E, 001F, 001G, 001H, 001J, 001K, 001L, 001M, 001N, 001P, 001Q, 001R		004

- ITEM NOT ILLUSTRATED

FIG. ITEM	PART NUMBER	AIRLINE STOCK NUMBER	NOMENCLATURE 1234567	EFF CODE	UNITS PER ASSY
080A	MS21042-08		. . NUT used on 001A, 001B, 001C, 001D, 001E, 001F, 001G, 001H, 001J, 001K, 001L, 001M, 001N, 001P, 001Q, 001R		004
090A	NAS1096-3-14		. . SCREW BUY PN NAS1801-3-14 used on 001A, 001B, 001C, 001D, 001E, 001F, 001G, 001H, 001J, 001K, 001L, 001M, 001N, 001P, 001Q, 001R		003
100A	NAS1149C0332R		. . WASHER used on 001A, 001B, 001C, 001D, 001E, 001F, 001G, 001H, 001J, 001K, 001L, 001M, 001N, 001P, 001Q, 001R		003
110A	MS21042-3		. . NUT used on 001A, 001B, 001C, 001D, 001E, 001F, 001G, 001H, 001J, 001K, 001L, 001M, 001N, 001P, 001Q, 001R		003
120A	A338300010-244		. . HOSE used on 001A, 001B, 001C, 001D, 001E, 001F, 001G, 001H, 001J, 001K, 001L, 001M, 001N, 001P, 001Q, 001R		001
130A	MS21919WCH18		. . CLAMP BUY PN AS21919WCH18 PRE VSB A2-254-25-077 PRE VSB A2-254-25-108 used on 001A, 001B, 001D, 001E, 001F, 001H, 001K, 001L, 001M		002

- ITEM NOT ILLUSTRATED

FIG. ITEM	PART NUMBER	AIRLINE STOCK NUMBER	NOMENCLATURE 1234567	EFF CODE	UNITS PER ASSY
-130B	MS21919WCH18		. . CLAMP POST VSB A2-254-25-077 POST VSB A2-254-25-108 used on 001Q, 001R		001
135A	MS21919WCH18		. . CLAMP BUY PN AS21919WCH18 PRE VSB A2-254-25-015 PRE VSB A2-254-25-029 PRE VSB A2-254-25-035 used on 001C, 001G, 001J		002
-135B	MS21919WCH18		. . CLAMP POST VSB A2-254-25-015 POST VSB A2-254-25-029 POST VSB A2-254-25-035 used on 001N, 001P		001
-137A	MS21919WCH8		. . CLAMP POST VSB A2-254-25-015 POST VSB A2-254-25-029 POST VSB A2-254-25-035 used on 001N, 001P		001
140A	MS21919WCH9		. . CLAMP BUY PN AS21919WCH09 used on 001A, 001B, 001D, 001E, 001F, 001H, 001K, 001L, 001M, 001N, 001P, 001Q, 001R		001
150A	NSA5527-03-08		. . SPACER used on 001A, 001B, 001D, 001E, 001F, 001H, 001K, 001L, 001M, 001P, 001Q, 001R		001
151A	NSA5527-03-08		. . SPACER used on 001C, 001G, 001J		002
-151B	NSA5527-03-08		. . SPACER used on 001N		001

- ITEM NOT ILLUSTRATED

FIG. ITEM	PART NUMBER	AIRLINE STOCK NUMBER	NOMENCLATURE 1234567	EFF CODE	UNITS PER ASSY
-152A	NSA5527-03-02		. . SPACER used on 001N		001
160A	NAS1096-2-20		. . SCREW BUY PN NAS1801-08-20 used on 001A, 001B, 001D, 001E, 001F, 001H, 001K, 001L, 001M, 001P, 001Q, 001R		001
-162A	NAS1801-08-18		. . SCREW used on 001N		001
-164A	NAS1801-08-24		. . SCREW used on 001N		001
170A	NAS1149CN832R		. . WASHER PRE VSB A2-254-25-108 used on 001A, 001B, 001D, 001E, 001F, 001H, 001K, 001L, 001M, 001N, 001Q		002
-170B	NAS1149CN832R		. . WASHER POST VSB A2-254-25-108 used on 001P, 001R		001
175A	NAS1149CN832R		. . WASHER used on 001C, 001G, 001J		002
180A	NAS1096-2-7		. . SCREW BUY PN NAS1801-08-7 used on 001A, 001B, 001D, 001E, 001F, 001H, 001K, 001L, 001M, 001N, 001Q, 001R		001
190A	MS21042-08		. . NUT used on 001A, 001B, 001D, 001E, 001F, 001H, 001K, 001L, 001M, 001N, 001Q, 001R		001

- ITEM NOT ILLUSTRATED

FIG. ITEM	PART NUMBER	AIRLINE STOCK NUMBER	NOMENCLATURE 1234567	EFF CODE	UNITS PER ASSY
210A	NAS1096-2-16		. . SCREW BUY PN NAS1801-08-16 used on 001C, 001G, 001J		002
220A	ABS0619-12-02		. . INSULATION used on 001D, 001E, 001G		001
230A	ABS0616-1-16		. . INSULATION BUY PN ABS0616-1-16A used on 001D, 001E, 001F, 001H		AR
-230B	ABS0616A1-16A		. . INSULATION POST SB 38-1077 POST VSB A2-254-25-077 POST VSB A2-254-25-108 used on 001K, 001L, 001M, 001N, 001P, 001Q, 001R		AR
-240A	ABS5662B01		. . TAPE-ADHESIVE USE AS REQUIRED POST SB 38-1077 POST VSB A2-254-25-077 POST VSB A2-254-25-108 used on 001M, 001N, 001P, 001Q, 001R		AR

- ITEM NOT ILLUSTRATED

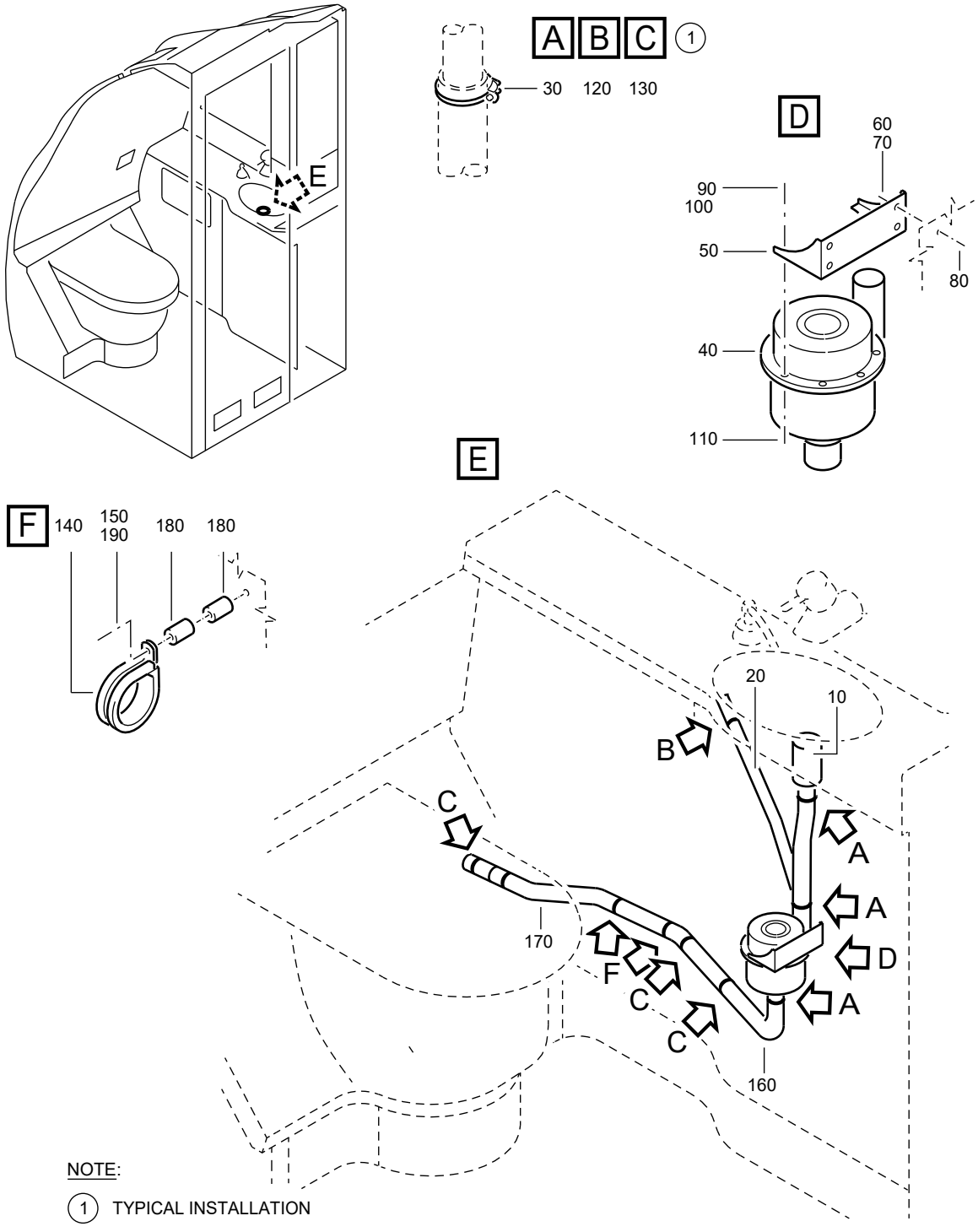

F_PL_254151_23_C_01_00

FIG. ITEM	PART NUMBER	AIRLINE STOCK NUMBER	NOMENCLATURE 1234567	EFF CODE	UNITS PER ASSY
23C					
-001A	D2549020600482		. WATER SYSTEM-WASTE NP used on 190D (25415101A), 190C (25415101D), 190D (25415101G), 190B (25415101H), 190D (254151410) SEE 25-41-51-01A FOR NHA SEE 25-41-51-01D FOR NHA SEE 25-41-51-01G FOR NHA SEE 25-41-51-01H FOR NHA SEE 25-41-51-410 FOR NHA		RF
-001B	D2549010506882		. WATER SYSTEM-WASTE NP used on 190D (25415101F), 190E (25415101H), 190C(25415101K), 190B (25415141B) SEE 25-41-51-01F FOR NHA SEE 25-41-51-01H FOR NHA SEE 25-41-51-01K FOR NHA SEE 25-41-51-41B FOR NHA		RF
010A	7800258		. . DRAIN ASSY POST SB 38-1055 used on 001A		001
-010B	7800259		. . DRAIN ASSY POST SB 38-1055 used on 001B		001
020A	A338300010-248		. . HOSE POST SB 38-1055 used on 001A, 001B		001
030A	ASNA0033-036		. . CLAMP POST SB 38-1055 used on 001A, 001B		003
040A	FRH340003H		. . VALVE-DRAIN POST SB 38-1055 used on 001A, 001B		001

- ITEM NOT ILLUSTRATED

FIG. ITEM	PART NUMBER	AIRLINE STOCK NUMBER	NOMENCLATURE 1234567	EFF CODE	UNITS PER ASSY
050A	A238100300-200		. . BRACKET POST SB 38-1055 used on 001A, 001B		001
060A	NAS1102-08-8		. . SCREW POST SB 38-1055 used on 001A, 001B		004
070A	NAS1149CN832R		. . WASHER POST SB 38-1055 used on 001A, 001B		004
080A	MS21042-08		. . NUT POST SB 38-1055 used on 001A, 001B		004
090A	NAS1096-3-14		. . SCREW POST SB 38-1055 BUY PN NAS1801-3-14 used on 001A, 001B		003
100A	NAS1149C0332R		. . WASHER POST SB 38-1055 used on 001A, 001B		003
110A	MS21042-3		. . NUT POST SB 38-1055 used on 001A, 001B		003
120A	ASNA0033-022		. . CLAMP POST SB 38-1055 used on 001A, 001B		001
130A	ASNA0032-028		. . CLAMP used on 001A, 001B		003
140A	MS21919WCH16		. . CLAMP BUY PN AS21919WCH16 used on 001A, 001B		002

- ITEM NOT ILLUSTRATED

FIG. ITEM	PART NUMBER	AIRLINE STOCK NUMBER	NOMENCLATURE 1234567	EFF CODE	UNITS PER ASSY
150A	NAS1149CN832R		. . WASHER used on 001A, 001B		011
160A	A3837232923000		. . HOSE used on 001A, 001B		001
170A	A238301000-000		. . TUBE used on 001A, 001B		001
180A	NSA5527-03-02		. . SPACER used on 001A, 001B		002
190A	NAS1096-2-16		. . SCREW BUY PN NAS1801-08-16 used on 001A, 001B		002

- ITEM NOT ILLUSTRATED

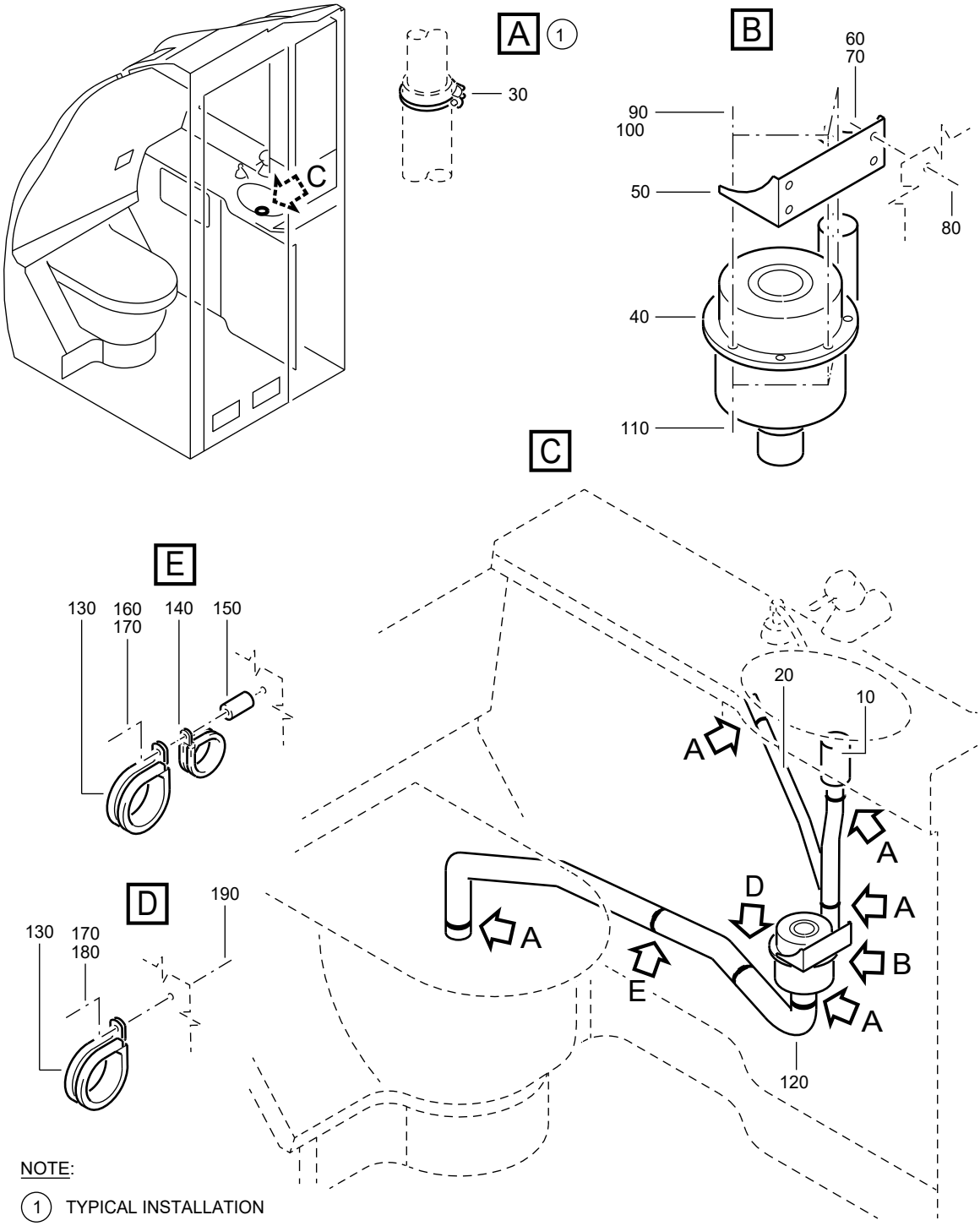

NOTE:

(1) TYPICAL INSTALLATION

F_PL_254151_23_D_01_00

FIG. ITEM	PART NUMBER	AIRLINE STOCK NUMBER	NOMENCLATURE 1234567	EFF CODE	UNITS PER ASSY
23D -001A	D2549030614682		. WATER SYSTEM-WASTE NP used on 190D (25415141P), 190D (25415141R), 190F (25415141X), 190B (25415142C), 190D (25415142J), 190B(25415142K), 190D (25415142L), 190C (25415142N), 190D(25415142R), 190B (25415142S) SEE 25-41-51-41P FOR NHA SEE 25-41-51-41R FOR NHA SEE 25-41-51-41X FOR NHA SEE 25-41-51-42C FOR NHA SEE 25-41-51-42J FOR NHA SEE 25-41-51-42K FOR NHA SEE 25-41-51-42L FOR NHA SEE 25-41-51-42N FOR NHA SEE 25-41-51-42R FOR NHA SEE 25-41-51-42S FOR NHA		RF

- ITEM NOT ILLUSTRATED

FIG. ITEM	PART NUMBER	AIRLINE STOCK NUMBER	NOMENCLATURE 1234567		EFF CODE	UNITS PER ASSY
-001B	D2549020800882		. WATER SYSTEM-WASTE PRE VSB A2-254-25-015 PRE VSB A2-254-25-077 used on 190E (25415141P), 190A (25415141R), 190D(25415141Y), 190E (25415141Z), 190E (254151420), 190A(25415142C), 190B (25415142E), 190B (25415142G), 190C(25415142J), 190A (25415142K), 190A (25415142L), 190A(25415142M), 190A (25415142N), 190A (25415142R), 190D(25415142T) SEE 25-41-51-41P FOR NHA SEE 25-41-51-41R FOR NHA SEE 25-41-51-41Y FOR NHA SEE 25-41-51-41Z FOR NHA SEE 25-41-51-420 FOR NHA SEE 25-41-51-42C FOR NHA SEE 25-41-51-42E FOR NHA SEE 25-41-51-42G FOR NHA SEE 25-41-51-42J FOR NHA SEE 25-41-51-42K FOR NHA SEE 25-41-51-42L FOR NHA SEE 25-41-51-42M FOR NHA SEE 25-41-51-42N FOR NHA SEE 25-41-51-42R FOR NHA SEE 25-41-51-42T FOR NHA	NP		RF
-001C	R22540161100082		. WATER SYSTEM-WASTE POST VSB A2-254-25-015 used on 190D (25415142M), 190E (25415142L) SEE 25-41-51-42M FOR NHA SEE 25-41-51-42L FOR NHA	NP		RF
-001D	R22540164300482		. WATER SYSTEM-WASTE POST VSB A2-254-25-077 used on 190C (25415142C) SEE 25-41-51-42C FOR NHA	NP		RF

- ITEM NOT ILLUSTRATED

FIG. ITEM	PART NUMBER	AIRLINE STOCK NUMBER	NOMENCLATURE 1234567	EFF CODE	UNITS PER ASSY
010A	7800258		. . DRAIN ASSY used on 001A		001
-010B	7800259		. . DRAIN ASSY used on 001B, 001C, 001D		001
020A	A338300010-236		. . HOSE used on 001A, 001B, 001C, 001D		001
030A	ASNA0033-036		. . CLAMP used on 001A, 001B, 001C, 001D		005
040A	FRH340003H		. . VALVE-DRAIN used on 001A, 001B, 001C, 001D		001
050A	A238100300-200		. . BRACKET used on 001A, 001B, 001C, 001D		001
060A	NAS1102-08-8		. . SCREW used on 001A, 001B, 001C, 001D		004
070A	NAS1149CN832R		. . WASHER used on 001A, 001B, 001C, 001D		004
080A	MS21042-08		. . NUT used on 001A, 001B, 001C, 001D		004
090A	NAS1096-3-14		. . SCREW BUY PN NAS1801-3-14 used on 001A, 001B, 001C, 001D		003
100A	NAS1149C0332R		. . WASHER used on 001A, 001B, 001C, 001D		003
110A	MS21042-3		. . NUT used on 001A, 001B, 001C, 001D		003
120A	A338300010-244		. . HOSE used on 001A, 001B, 001C, 001D		001

- ITEM NOT ILLUSTRATED

FIG. ITEM	PART NUMBER	AIRLINE STOCK NUMBER	NOMENCLATURE 1234567	EFF CODE	UNITS PER ASSY
130A	MS21919WCH18		. . CLAMP BUY PN AS21919WCH18 PRE VSB A2-254-25-077 used on 001A, 001B		002
-130B	MS21919WCH18		. . CLAMP POST VSB A2-254-25-077 used on 001C, 001D		001
-135A	MS21919WCH8		. . CLAMP used on 001C		001
140A	MS21919WCH9		. . CLAMP BUY PN AS21919WCH09 used on 001A, 001B, 001C, 001D		001
150A	NSA5527-03-08		. . SPACER used on 001A, 001B, 001C, 001D		001
-155A	NSA5527-03-02		. . SPACER used on 001C		001
160A	NAS1096-2-20		. . SCREW BUY PN NAS1801-08-20 used on 001A, 001B, 001D		001
-162A	NAS1801-08-24		. . SCREW used on 001C		001
-164A	NAS1801-08-18		. . SCREW used on 001C		001
170A	NAS1149CN832R		. . WASHER used on 001A, 001B, 001C, 001D		002
180A	NAS1096-2-7		. . SCREW BUY PN NAS1801-08-7 used on 001A, 001B, 001D		001
190A	MS21042-08		. . NUT used on 001A, 001B, 001D		001

- ITEM NOT ILLUSTRATED

FIG. ITEM	PART NUMBER	AIRLINE STOCK NUMBER	NOMENCLATURE 1234567	EFF CODE	UNITS PER ASSY
-200A	ABS0616A1-16A		. . INSULATION POST VSB A2-254-25-077 used on 001C, 001D		AR
-210A	ABS5662B01		. . ADHESIVE-TAPE POST VSB A2-254-25-077 used on 001C, 001D		AR

- ITEM NOT ILLUSTRATED

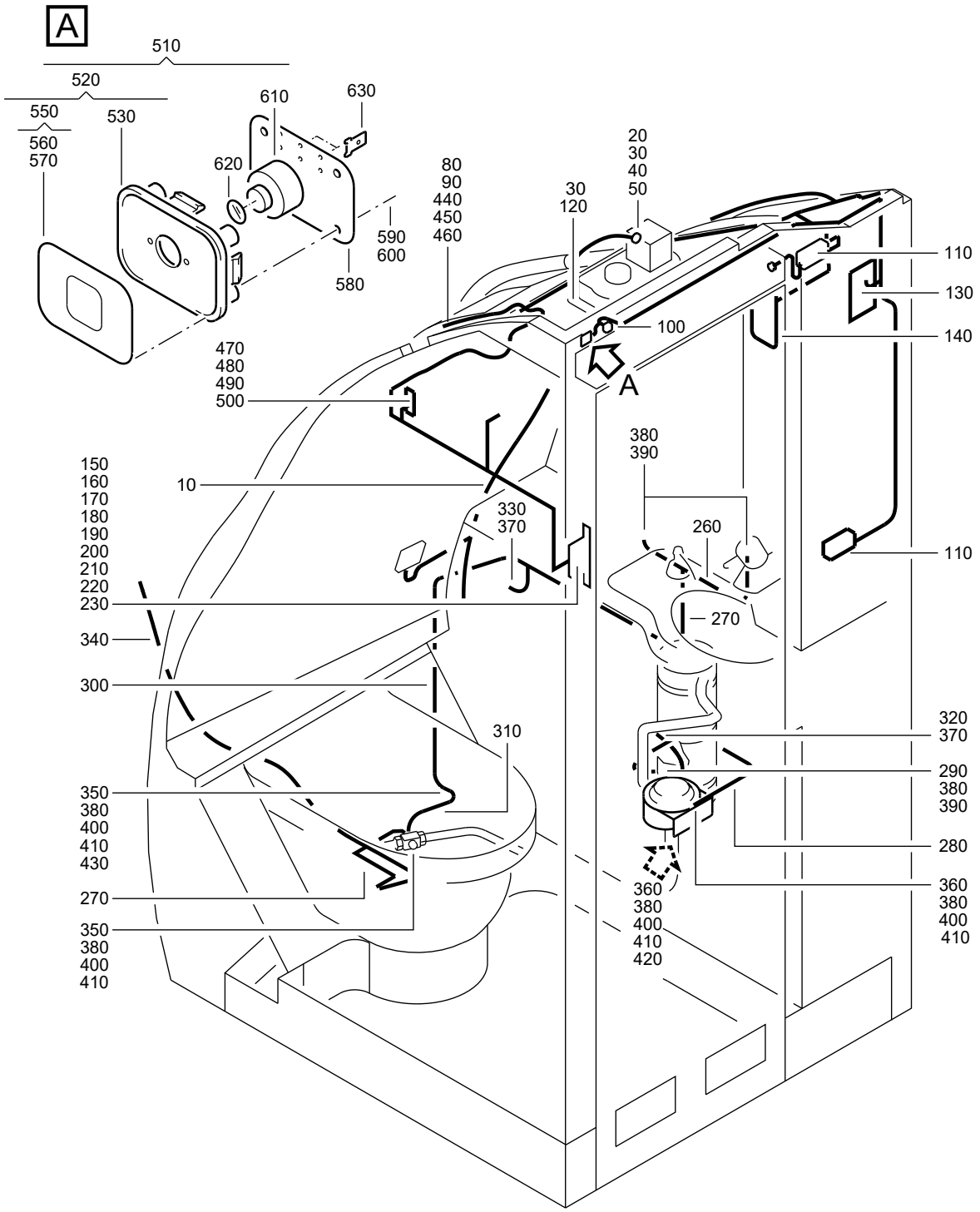

F_PL_254151_26_0_01_00

ELECTRICAL SYSTEM
Figure 26/EN254151SHEET26001

FIG. ITEM	PART NUMBER	AIRLINE STOCK NUMBER	NOMENCLATURE 1234567		EFF CODE	UNITS PER ASSY
26						
-001A	D2549010500083		. ELECTRICAL SYSTEM used on 200A (254151010), 200E (25415141T) SEE 25-41-51-010 FOR NHA SEE 25-41-51-41T FOR NHA	NP		RF
-001B	D2549010500483		. ELECTRICAL SYSTEM used on 200B (254151010) SEE 25-41-51-010 FOR NHA	NP		RF
-001C	D2549010501083		. ELECTRICAL SYSTEM used on 200D (254151010), 200A (25415101A), 200A(25415101B), 200D (25415141T) SEE 25-41-51-010 FOR NHA SEE 25-41-51-01A FOR NHA SEE 25-41-51-01B FOR NHA SEE 25-41-51-41T FOR NHA	NP		RF
-001D	D2549010501683		. ELECTRICAL SYSTEM used on 200B (25415101A), 200B (25415101B) SEE 25-41-51-01A FOR NHA SEE 25-41-51-01B FOR NHA	NP		RF
-001E	D2549010503483		. ELECTRICAL SYSTEM used on 200C (25415101B), 200C (25415101E), 200C (25415101F) SEE 25-41-51-01B FOR NHA SEE 25-41-51-01E FOR NHA SEE 25-41-51-01F FOR NHA	NP		RF
-001F	D2549020502883		. ELECTRICAL SYSTEM used on 200E (25415101A) SEE 25-41-51-01A FOR NHA	NP		RF

- ITEM NOT ILLUSTRATED

FIG. ITEM	PART NUMBER	AIRLINE STOCK NUMBER	NOMENCLATURE 1234567		EFF CODE	UNITS PER ASSY
-001G	D2549020600483		. ELECTRICAL SYSTEM used on 200D (25415101H), 200B (25415101K), 200E (254151410), 200B (25415141B) SEE 25-41-51-01H FOR NHA SEE 25-41-51-01K FOR NHA SEE 25-41-51-410 FOR NHA SEE 25-41-51-41B FOR NHA	NP		RF
-001H	D2549020600283		. ELECTRICAL SYSTEM used on 200B (25415101C), 200B (25415101D) SEE 25-41-51-01C FOR NHA SEE 25-41-51-01D FOR NHA	NP		RF

- ITEM NOT ILLUSTRATED

FIG. ITEM	PART NUMBER	AIRLINE STOCK NUMBER	NOMENCLATURE 1234567		EFF CODE	UNITS PER ASSY
-001J	D2549030500483		. ELECTRICAL SYSTEM PRE VSB A2-254-25-032 used on 200E (254151010), 200K (25415101A), 200E(25415101B), 200A (25415101C), 200C (25415101D), 200A(25415101E), 200A (25415101F), 200B (25415101G), 200A(25415101H), 200B (25415101J), 200C (25415101K), 200B(25415101L), 200D (25415101M), 200D (25415101N) SEE 25-41-51-010 FOR NHA SEE 25-41-51-01A FOR NHA SEE 25-41-51-01B FOR NHA SEE 25-41-51-01C FOR NHA SEE 25-41-51-01D FOR NHA SEE 25-41-51-01E FOR NHA SEE 25-41-51-01F FOR NHA SEE 25-41-51-01G FOR NHA SEE 25-41-51-01H FOR NHA SEE 25-41-51-01J FOR NHA SEE 25-41-51-01K FOR NHA SEE 25-41-51-01L FOR NHA SEE 25-41-51-01M FOR NHA SEE 25-41-51-01N FOR NHA	NP		RF
-001K	D2549010500683		. ELECTRICAL SYSTEM used on 200F (254151010) SEE 25-41-51-010 FOR NHA	NP		RF
-001L	D2549010501483		. ELECTRICAL SYSTEM used on 200G (25415101A) SEE 25-41-51-01A FOR NHA	NP		RF
-001M	D2549020603683		. ELECTRICAL SYSTEM used on 200B (25415101H) SEE 25-41-51-01H FOR NHA	NP		RF

- ITEM NOT ILLUSTRATED

FIG. ITEM	PART NUMBER	AIRLINE STOCK NUMBER	NOMENCLATURE 1234567		EFF CODE	UNITS PER ASSY
-001N	D2549020606683		. ELECTRICAL SYSTEM used on 200C (25415101H) SEE 25-41-51-01H FOR NHA	NP		RF
-001P	D2549030409683		. ELECTRICAL SYSTEM POST SB 26-1058 used on 200J (254151010) SEE 25-41-51-010 FOR NHA	NP		RF
-001Q	D2549030500483		. ELECTRICAL SYSTEM POST VSB A2-254-25-032 used on 200F (25415101H), 200D (25415101L) SEE 25-41-51-01H FOR NHA	NP		RF
010A	A292901200-000		. . HARNESS-CABLE used on 001A, 001K SEE 25-41-51-270 FOR DET			001
-010B	A292901200-006		. . HARNESS-CABLE used on 001B SEE 25-41-51-270 FOR DET			001
-010C	A292901200-010		. . HARNESS-CABLE used on 001C, 001L SEE 25-41-51-270 FOR DET			001
-010D	A292901200-012		. . HARNESS-CABLE used on 001D SEE 25-41-51-270 FOR DET			001
-010E	A292901201-004		. . HARNESS ASSY-CABLE used on 001E SEE 25-41-51-270 FOR DET			001
-010F	A292901201-002		. . HARNESS ASSY-CABLE used on 001G, 001J, 001M, 001N, 001Q SEE 25-41-51-270 FOR DET			001

- ITEM NOT ILLUSTRATED

FIG. ITEM	PART NUMBER	AIRLINE STOCK NUMBER	NOMENCLATURE 1234567	EFF CODE	UNITS PER ASSY
-010G	A292901201-006		. . HARNESS ASSY-CABLE used on 001H SEE 25-41-51-270 FOR DET		001
-010H	A292901200-008		. . HARNESS-CABLE used on 001F SEE 25-41-51-270 FOR DET		001
020A	PAI2830-00		. . DETECTOR-SMOKE used on 001A, 001F, 001G, 001H, 001J, 001M, 001N, 001Q		001
-020B	PAPE2800-00		. . DETECTOR-SMOKE used on 001B, 001C, 001D, 001E		001
-020C	PPA1202-00		. . DETECTOR-SMOKE POST SB 26-1058 used on 001K, 001L, 001P		001
030A	AN960C8		. . WASHER BUY PN NAS1149CN832R used on 001A, 001B, 001C, 001D, 001E, 001F, 001G, 001H, 001J, 001K, 001L, 001M, 001N, 001P, 001Q		012
040A	NAS1100-08-10		. . SCREW used on 001A, 001B, 001C, 001D, 001E, 001F, 001G, 001H, 001J, 001K, 001L, 001M, 001N, 001P, 001Q		004
050A	5L0064200100000		. . SEALING-SMOKE DETECTOR used on 001A, 001F, 001G, 001H, 001J, 001K, 001L, 001M, 001N, 001P, 001Q		001

- ITEM NOT ILLUSTRATED

FIG. ITEM	PART NUMBER	AIRLINE STOCK NUMBER	NOMENCLATURE 1234567	EFF CODE	UNITS PER ASSY
-050B	A292500304-200		. . SEALING-SMOKE DETECTOR used on 001B, 001C, 001D, 001E		001
100A	10-1358-1		. . LIGHT-CALL used on 001A, 001B, 001C, 001D, 001E, 001F, 001G, 001H, 001J, 001K, 001L, 001M, 001N, 001P, 001Q		001
110A	A292500300-200		. . BRACKET used on 001A, 001B, 001C, 001D, 001E, 001F, 001G, 001H, 001J, 001K, 001L, 001M, 001N, 001P, 001Q		002
120A	NAS1096-2-7		. . SCREW BUY PN NAS1801-08-7 used on 001A, 001B, 001C, 001D, 001E, 001F, 001G, 001H, 001J, 001K, 001L, 001M, 001N, 001P, 001Q		008
130A	F1101316-02		. . LIGHT ASSY used on 001A, 001B, 001C, 001D, 001E, 001F, 001G, 001H, 001J, 001K, 001L, 001M, 001N, 001P, 001Q		001
-133A	F1000117-00		. . . LENS used on 130A		001
-135A	F1000118-00		. . . HOUSING used on 130A		001
-137A	356		. . . LAMP-INCANDESCENT used on 130A		001

- ITEM NOT ILLUSTRATED

FIG. ITEM	PART NUMBER	AIRLINE STOCK NUMBER	NOMENCLATURE 1234567	EFF CODE	UNITS PER ASSY
-138A	E0429-01		. . . LAMP BUY PN EN2240-7070 used on 130A		001
140A	4913211080		. . LOUDSPEAKER used on 001A, 001B, 001C, 001D, 001E, 001F, 001G, 001H, 001J, 001K, 001L, 001M, 001N, 001P, 001Q		001
150A	A225400225-002		. . MICROSWITCH used on 001A, 001B, 001C, 001D, 001F, 001K, 001L		001
-150B	A392500305-000		. . MICROSWITCH used on 001E, 001G, 001H, 001J, 001M, 001N, 001P, 001Q		001
160A	SP4863-20		. . . SWITCH-DOOR CONTACT used on 150A		001
170A	NAS1102-06-6		. . . SCREW used on 150A		002
180A	NAS1102-08-8		. . . SCREW used on 150A		002
190A	5041-02-0030-12		. . . BUSHING-THREADED used on 150A		002
200A	A225400225-204		. . . GUIDE used on 150A		001
210A	RZ042X		. . . SPRING used on 150A		001
220A	A225400225-202		. . . ANGLE-SUPPORT used on 150A		001

- ITEM NOT ILLUSTRATED

FIG. ITEM	PART NUMBER	AIRLINE STOCK NUMBER	NOMENCLATURE 1234567	EFF CODE	UNITS PER ASSY
230A	NAS1102-08-5		. . SCREW used on 001A, 001B, 001C, 001D, 001E, 001F, 001G, 001H, 001J, 001K, 001L, 001M, 001N, 001P, 001Q		002
-240A	NSA935401-03		. . TIE-CABLE used on 001A, 001B, 001C, 001D, 001E, 001F, 001G, 001H, 001J, 001K, 001L, 001M, 001N, 001P, 001Q		050
-250A	NSA935405-01		. . MOUNT USE AS REQUIRED USAGE RANGE FROM 20 TO 25 used on 001A, 001B, 001C, 001D, 001E, 001F, 001G, 001H, 001J, 001K, 001L, 001M, 001N, 001P, 001Q		AR
260A	DCIN602-0640		. . STRAP-BONDING used on 001A, 001B, 001C, 001D, 001E, 001F, 001G, 001H, 001J, 001K, 001L, 001M, 001N, 001P, 001Q		001
270A	DCIN600-0900		. . STRAP-BONDING used on 001A, 001B, 001C, 001D, 001E, 001F, 001G, 001H, 001J, 001K, 001L, 001N, 001Q		002
280A	DCIN600-0740		. . STRAP-BONDING used on 001A, 001B, 001F, 001K, 001M, 001N, 001P		001
-280B	DCIN600-0700		. . STRAP-BONDING PRE VSB A2-254-25-032 used on 001C, 001D, 001E, 001G, 001H, 001J, 001L		001

- ITEM NOT ILLUSTRATED

FIG. ITEM	PART NUMBER	AIRLINE STOCK NUMBER	NOMENCLATURE 1234567	EFF CODE	UNITS PER ASSY
290A	DCIN600-0590		. . STRAP-BONDING used on 001A, 001B, 001C, 001D, 001E, 001F, 001H, 001J, 001K, 001L, 001M, 001N, 001P, 001Q		001
300A	DCIN600-1370		. . STRAP-BONDING used on 001A, 001B, 001C, 001D, 001E, 001F, 001G, 001H, 001J, 001K, 001L, 001M, 001N, 001P, 001Q		001
310A	DCIN600-0380		. . STRAP-BONDING used on 001A, 001B, 001C, 001D, 001E, 001F, 001G, 001H, 001J, 001K, 001L, 001M, 001N, 001P, 001Q		001
320A	DCIN600-0510		. . STRAP-BONDING used on 001C, 001D, 001E, 001G, 001H, 001J, 001L, 001M, 001P, 001Q		001
330A	DCIN600-0850		. . STRAP-BONDING used on 001C, 001D, 001E, 001F, 001G, 001H, 001J, 001M, 001P, 001Q		001
340A	DCIN601-0750		. . STRAP-BONDING used on 001A, 001B, 001C, 001D, 001E, 001F, 001G, 001H, 001J, 001K, 001L, 001M, 001N, 001P, 001Q		001
350A	NAS1096-3-16		. . SCREW BUY PN NAS1801-3-16 used on 001A, 001B, 001C, 001D, 001E, 001F, 001G, 001H, 001J, 001K, 001L, 001M, 001N, 001P, 001Q		003

- ITEM NOT ILLUSTRATED

FIG. ITEM	PART NUMBER	AIRLINE STOCK NUMBER	NOMENCLATURE 1234567	EFF CODE	UNITS PER ASSY
360A	NAS1096-3-20		. . SCREW USE AS REQUIRED USAGE RANGE FROM 1 TO 2 BUY PN NAS1801-3-20 used on 001A, 001B, 001C, 001D, 001E, 001F, 001G, 001H, 001J, 001K, 001L, 001M, 001N, 001P, 001Q		AR
370A	NAS1096-2-6		. . SCREW BUY PN NAS1801-08-6 used on 001C, 001D, 001E, 001F, 001G, 001H, 001J, 001L, 001M, 001P, 001Q		002
380A	ASNA0113-48ADL		. . WASHER USE AS REQUIRED USAGE RANGE FROM 6 TO 10 used on 001A, 001B, 001C, 001D, 001E, 001F, 001G, 001H, 001J, 001K, 001L, 001M, 001N, 001P, 001Q		AR
390A	MS21042-3		. . NUT used on 001A, 001B, 001C, 001D, 001E, 001F, 001G, 001H, 001J, 001K, 001L, 001M, 001N, 001P, 001Q		003
400A	NAS509-3		. . NUT used on 001A, 001B, 001C, 001D, 001E, 001F, 001G, 001H, 001J, 001K, 001L, 001M, 001N, 001P, 001Q		004
410A	MS35338-158		. . WASHER-LOCK used on 001A, 001B, 001C, 001D, 001E, 001F, 001G, 001H, 001J, 001K, 001L, 001M, 001N, 001P, 001Q		004

- ITEM NOT ILLUSTRATED

FIG. ITEM	PART NUMBER	AIRLINE STOCK NUMBER	NOMENCLATURE 1234567	EFF CODE	UNITS PER ASSY
420A	NSA5575-7		. . CLAMP used on 001A, 001B, 001C, 001D, 001E, 001F, 001G, 001H, 001J, 001K, 001L, 001M, 001N, 001P, 001Q		001
430A	NSA5575-14		. . CLAMP used on 001A, 001B, 001C, 001D, 001E, 001F, 001G, 001H, 001J, 001K, 001L, 001M, 001N, 001P, 001Q		001
440A	NAS1100-04-6		. . SCREW used on 001A, 001B, 001C, 001D, 001E, 001F, 001G, 001H, 001J, 001K, 001L, 001M, 001N, 001P, 001Q		004
450A	AN960C4		. . WASHER BUY PN NAS1149CN432R used on 001A, 001B, 001C, 001D, 001E, 001F, 001G, 001H, 001J, 001K, 001L, 001M, 001N, 001P, 001Q		008
460A	MS21042-04		. . NUT used on 001A, 001B, 001C, 001D, 001E, 001F, 001G, 001H, 001J, 001K, 001L, 001M, 001N, 001P, 001Q		008
470A	A292500303-200		. . SHEET used on 001A, 001B, 001C, 001D, 001E, 001F, 001G, 001H, 001J, 001K, 001L, 001M, 001N, 001P, 001Q		001

- ITEM NOT ILLUSTRATED

FIG. ITEM	PART NUMBER	AIRLINE STOCK NUMBER	NOMENCLATURE 1234567	EFF CODE	UNITS PER ASSY
480A	NAS1096-2-5		. . SCREW BUY PN NAS1801-08-5 used on 001A, 001B, 001C, 001D, 001E, 001F, 001G, 001H, 001J, 001K, 001L, 001M, 001N, 001P, 001Q		006
490A	NAS1102-04-6		. . SCREW used on 001A, 001B, 001C, 001D, 001E, 001F, 001G, 001H, 001J, 001K, 001L, 001M, 001N, 001P, 001Q		002
500A	NAS1021N04		. . NUT used on 001A, 001B, 001C, 001D, 001E, 001F, 001G, 001H, 001J, 001K, 001L, 001M, 001N, 001P, 001Q		006
510A	D9259036500200		. . PANEL-SWITCH,2065VU used on 001H		001
520A	D9259018203400		. . . HOUSING ASSY-SWITCH used on 510A		001
530A	D9259018400800		. . . . HOUSING-SWITCH used on 520A		001
550A	D9259024203400		. . . . FOIL ASSY used on 520A		001
560A	D9259024223400		. . . . . FOIL used on 550A		001
570A	D9259018220200		. . . . . FILM-ADHESIVE used on 550A		001
580A	D9259023820600		. . . PCB-PRINTED CIRCUIT BOARD used on 510A		001

- ITEM NOT ILLUSTRATED

FIG. ITEM	PART NUMBER	AIRLINE STOCK NUMBER	NOMENCLATURE 1234567	EFF CODE	UNITS PER ASSY
590A	NAS1100E04-5		. . . SCREW used on 510A		004
600A	DIN137A3B2C		. . . WASHER-SPRING BUY PN DIN137B3B2C used on 510A		004
610A	811215100		. . . SWITCH-BUTTON,SWITCH used on 510A		001
620A	800003511		. . . LENS-PROTECTIVE used on 510A		001
630A	726388-3		. . . PLUG used on 510A		002
-640A	NAS1149DN816		. . WASHER POST VSB A2-254-25-032 used on 001Q		001
-650A	MS21042-08		. . NUT POST VSB A2-254-25-032 used on 001Q		001

- ITEM NOT ILLUSTRATED

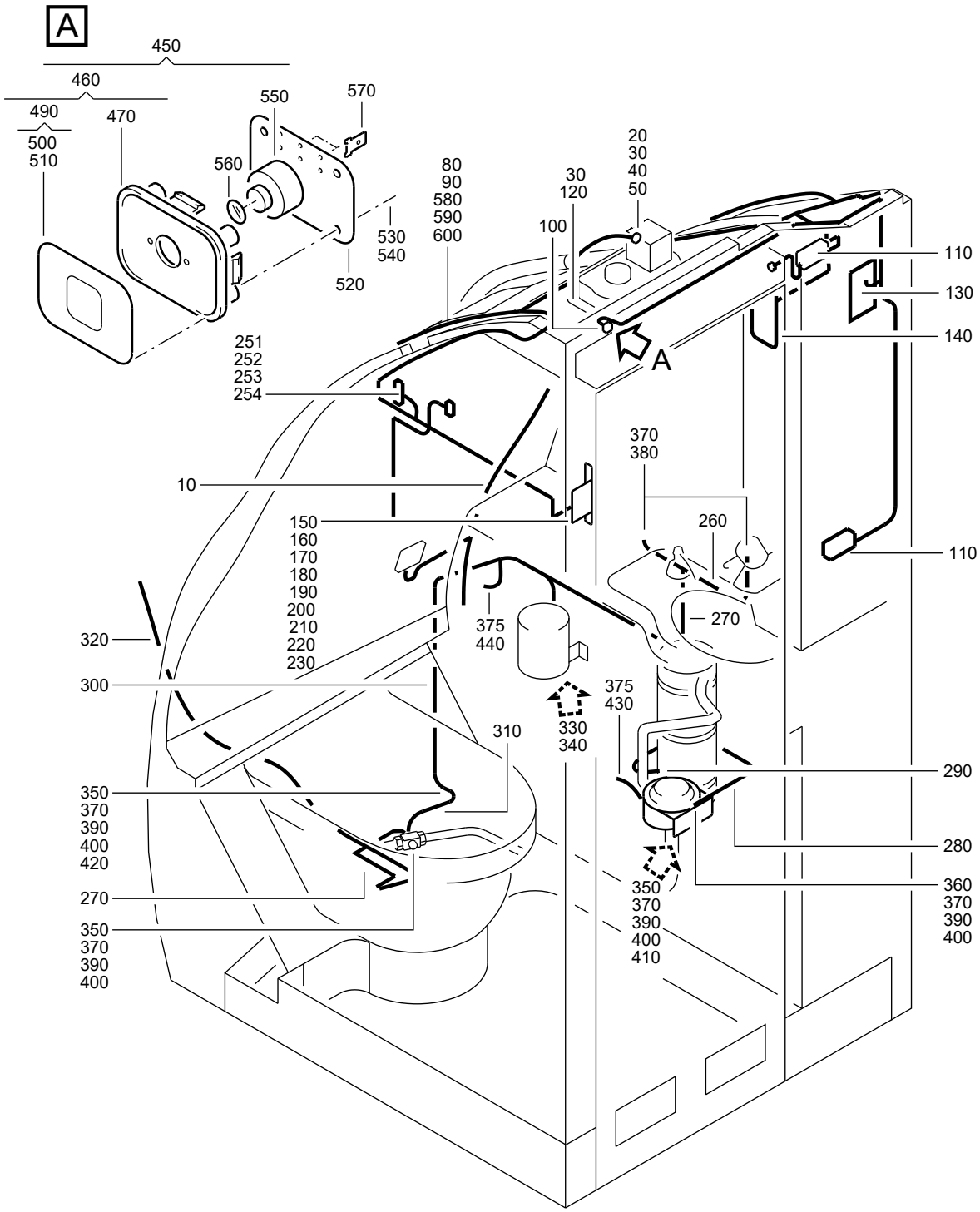

F_PL_254151_26_A_01_00

ELECTRICAL SYSTEM
Figure 26A/EN254151SHEET26A01

FIG. ITEM	PART NUMBER	AIRLINE STOCK NUMBER	NOMENCLATURE 1234567		EFF CODE	UNITS PER ASSY
26A						
-001A	D2549021500083		. ELECTRICAL SYSTEM used on 200C (254151010), 200C (25415101A) SEE 25-41-51-010 FOR NHA SEE 25-41-51-01A FOR NHA	NP		RF
-001B	D2549020501483		. ELECTRICAL SYSTEM used on 200D (25415101A) SEE 25-41-51-01A FOR NHA	NP		RF
-001C	D2549020503283		. ELECTRICAL SYSTEM used on 200D (25415101B), 200A (25415101D), 200B (25415101E), 200B (25415101F) SEE 25-41-51-01B FOR NHA SEE 25-41-51-01D FOR NHA SEE 25-41-51-01E FOR NHA SEE 25-41-51-01F FOR NHA	NP		RF
-001D	D2549010508283		. ELECTRICAL SYSTEM used on 200C (25415101G) SEE 25-41-51-01G FOR NHA	NP		RF
-001E	D2549010508083		. ELECTRICAL SYSTEM used on 200A (25415101G) SEE 25-41-51-01G FOR NHA	NP		RF
-001F	D2549020501883		. ELECTRICAL SYSTEM used on 200H (254151010) SEE 25-41-51-010 FOR NHA	NP		RF
010A	A292901200-004		. . HARNESS-CABLE used on 001A SEE 25-41-51-270 FOR DET			001
-010B	A292901200-008		. . HARNESS-CABLE used on 001B SEE 25-41-51-270 FOR DET			001

- ITEM NOT ILLUSTRATED

FIG. ITEM	PART NUMBER	AIRLINE STOCK NUMBER	NOMENCLATURE 1234567	EFF CODE	UNITS PER ASSY
-010C	A292901201-000		. . HARNESS ASSY-CABLE used on 001C SEE 25-41-51-270 FOR DET		001
-010D	A292901201-004		. . HARNESS ASSY-CABLE used on 001D SEE 25-41-51-270 FOR DET		001
-010E	A292901201-008		. . HARNESS ASSY-CABLE used on 001E SEE 25-41-51-270 FOR DET		001
-010F	A292901200-000		. . HARNESS-CABLE used on 001F SEE 25-41-51-270 FOR DET		001
020A	PAI2830-00		. . DETECTOR-SMOKE used on 001A, 001B, 001C, 001E		001
-020B	PPA1202-00		. . DETECTOR-SMOKE POST SB 26-1058 used on 001D, 001F		001
030A	AN960C8		. . WASHER BUY PN NAS1149CN832R used on 001A, 001B, 001C, 001F		012
-030B	NAS1149CN832R		. . WASHER used on 001D, 001E		012
040A	NAS1100-08-10		. . SCREW used on 001A, 001B, 001C, 001D, 001E, 001F		004
050A	5L0064200100000		. . SEALING-SMOKE DETECTOR used on 001A, 001B, 001C, 001D, 001E, 001F		001

- ITEM NOT ILLUSTRATED

FIG. ITEM	PART NUMBER	AIRLINE STOCK NUMBER	NOMENCLATURE 1234567	EFF CODE	UNITS PER ASSY
100A	10-1358-1		. . LIGHT-CALL used on 001A, 001B, 001C, 001D, 001E, 001F		001
110A	A292500300-200		. . BRACKET used on 001A, 001B, 001C, 001D, 001E, 001F		002
120A	NAS1096-2-7		. . SCREW BUY PN NAS1801-08-7 used on 001A, 001B, 001C, 001D, 001E, 001F		008
130A	F1101316-02		. . LIGHT ASSY used on 001A, 001B, 001C, 001D, 001E, 001F		001
-133A	F1000117-00		. . . LENS used on 130A		001
-135A	F1000118-00		. . . HOUSING used on 130A		001
-137A	356		. . . LAMP-INCANDESCENT used on 130A		001
-138A	E0429-01		. . . LAMP BUY PN EN2240-7070 used on 130A		001
140A	4913211080		. . LOUDSPEAKER used on 001A, 001B, 001C, 001D, 001E, 001F		001
150A	A225400225-002		. . MICROSWITCH used on 001A, 001B		001
-150B	A392500305-000		. . MICROSWITCH used on 001C, 001D, 001E, 001F		001

- ITEM NOT ILLUSTRATED

FIG. ITEM	PART NUMBER	AIRLINE STOCK NUMBER	NOMENCLATURE 1234567	EFF CODE	UNITS PER ASSY
160A	SP4863-20		. . . SWITCH-DOOR CONTACT used on 150A		001
170A	NAS1102-06-6		. . . SCREW used on 150A		002
180A	NAS1102-08-8		. . . SCREW used on 150A		002
190A	5041-02-0030-12		. . . BUSHING-THREADED used on 150A		002
200A	A225400225-204		. . . GUIDE used on 150A		001
210A	RZ042X		. . . SPRING used on 150A		001
220A	A225400225-202		. . . ANGLE-SUPPORT used on 150A		001
230A	NAS1102-08-5		. . SCREW used on 001A, 001B, 001C, 001D, 001E, 001F		002
-240A	NSA935401-03		. . TIE-CABLE used on 001A, 001B, 001C, 001D, 001E, 001F		050
-250A	NSA935405-01		. . MOUNT used on 001A, 001B, 001C, 001D, 001E, 001F		020
251A	A292500303-200		. . SHEET used on 001A, 001B, 001C, 001D, 001E, 001F		001
252A	NAS1096-2-5		. . SCREW BUY PN NAS1801-08-5 used on 001A, 001B, 001C, 001D, 001E, 001F		002

- ITEM NOT ILLUSTRATED

FIG. ITEM	PART NUMBER	AIRLINE STOCK NUMBER	NOMENCLATURE 1234567	EFF CODE	UNITS PER ASSY
253A	NAS1102-04-6		. . SCREW used on 001A, 001B, 001C, 001D, 001E, 001F		002
254A	NAS1021N04		. . NUT used on 001A, 001B, 001C, 001D, 001E, 001F		002
260A	DCIN602-0640		. . STRAP-BONDING used on 001A, 001B, 001C, 001D, 001E, 001F		001
270A	DCIN600-0900		. . STRAP-BONDING used on 001A, 001B, 001C, 001D, 001E, 001F		002
280A	DCIN600-0740		. . STRAP-BONDING used on 001A, 001B, 001C, 001D, 001E, 001F		001
290A	DCIN600-0590		. . STRAP-BONDING used on 001A, 001B, 001C, 001D, 001E, 001F		001
300A	DCIN600-1370		. . STRAP-BONDING used on 001A, 001B, 001C, 001D, 001E, 001F		001
310A	DCIN600-0380		. . STRAP-BONDING used on 001A, 001B, 001C, 001D, 001E, 001F		001
320A	DCIN601-0750		. . STRAP-BONDING used on 001A, 001B, 001C, 001D, 001E, 001F		001
330A	NAS1096-2-6		. . SCREW BUY PN NAS1801-08-6 used on 001A, 001B, 001C		001

- ITEM NOT ILLUSTRATED

FIG. ITEM	PART NUMBER	AIRLINE STOCK NUMBER	NOMENCLATURE 1234567	EFF CODE	UNITS PER ASSY
340A	AN960C8		. . WASHER BUY PN NAS1149CN832R used on 001A, 001B, 001C		001
350A	NAS1096-3-16		. . SCREW BUY PN NAS1801-3-16 used on 001A, 001B, 001C, 001D, 001E, 001F		003
360A	NAS1096-3-20		. . SCREW BUY PN NAS1801-3-20 used on 001A, 001B, 001C, 001D, 001E, 001F		001
370A	ASNA0113-48ADL		. . WASHER used on 001A, 001B, 001C, 001D, 001E, 001F		006
375A	ASNA0113-48ADL		. . WASHER used on 001D		002
380A	MS21042-3		. . NUT used on 001A, 001B, 001C, 001D, 001E, 001F		002
390A	NAS509-3		. . NUT used on 001A, 001B, 001C, 001D, 001E, 001F		004
400A	MS35338-158		. . WASHER-LOCK used on 001A, 001B, 001C, 001D, 001E, 001F		004
410A	NSA5575-7		. . CLAMP used on 001A, 001B, 001C, 001D, 001E, 001F		001
420A	NSA5575-14		. . CLAMP used on 001A, 001B, 001C, 001D, 001E, 001F		001

- ITEM NOT ILLUSTRATED

FIG. ITEM	PART NUMBER	AIRLINE STOCK NUMBER	NOMENCLATURE 1234567	EFF CODE	UNITS PER ASSY
430A	DCIN600-0510		. . STRAP-BONDING used on 001C, 001D		001
440A	DCIN600-0850		. . STRAP-BONDING used on 001C, 001D		001
450A	D9259036500200		. . PANEL-SWITCH,2065VU used on 001E		001
460A	D9259018203400		. . . HOUSING ASSY-SWITCH used on 450A		001
470A	D9259018400800		. . . . HOUSING-SWITCH used on 460A		001
490A	D9259024203400		. . . . FOIL ASSY used on 460A		001
500A	D9259024223400		. . . . . FOIL used on 490A		001
510A	D9259018220200		. . . . . FILM-ADHESIVE used on 490A		001
520A	D9259023820600		. . . PCB-PRINTED CIRCUIT BOARD used on 450A		001
530A	NAS1100E04-5		. . . SCREW used on 450A		004
540A	DIN137A3B2C		. . . WASHER-SPRING BUY PN DIN137B3B2C used on 450A		004
550A	811215100		. . . SWITCH-BUTTON,SWITCH used on 450A		001
560A	800003511		. . . LENS-PROTECTIVE used on 450A		001

- ITEM NOT ILLUSTRATED

FIG. ITEM	PART NUMBER	AIRLINE STOCK NUMBER	NOMENCLATURE 1234567	EFF CODE	UNITS PER ASSY
570A	726388-3		. . . PLUG used on 450A		002
580A	NAS1100-04-6		. . SCREW used on 001E		004
590A	NAS1149CN432R		. . WASHER used on 001E		004
600A	MS21042-04		. . NUT used on 001E		008

- ITEM NOT ILLUSTRATED

THIS PAGE IS INTENTIONALLY LEFT BLANK

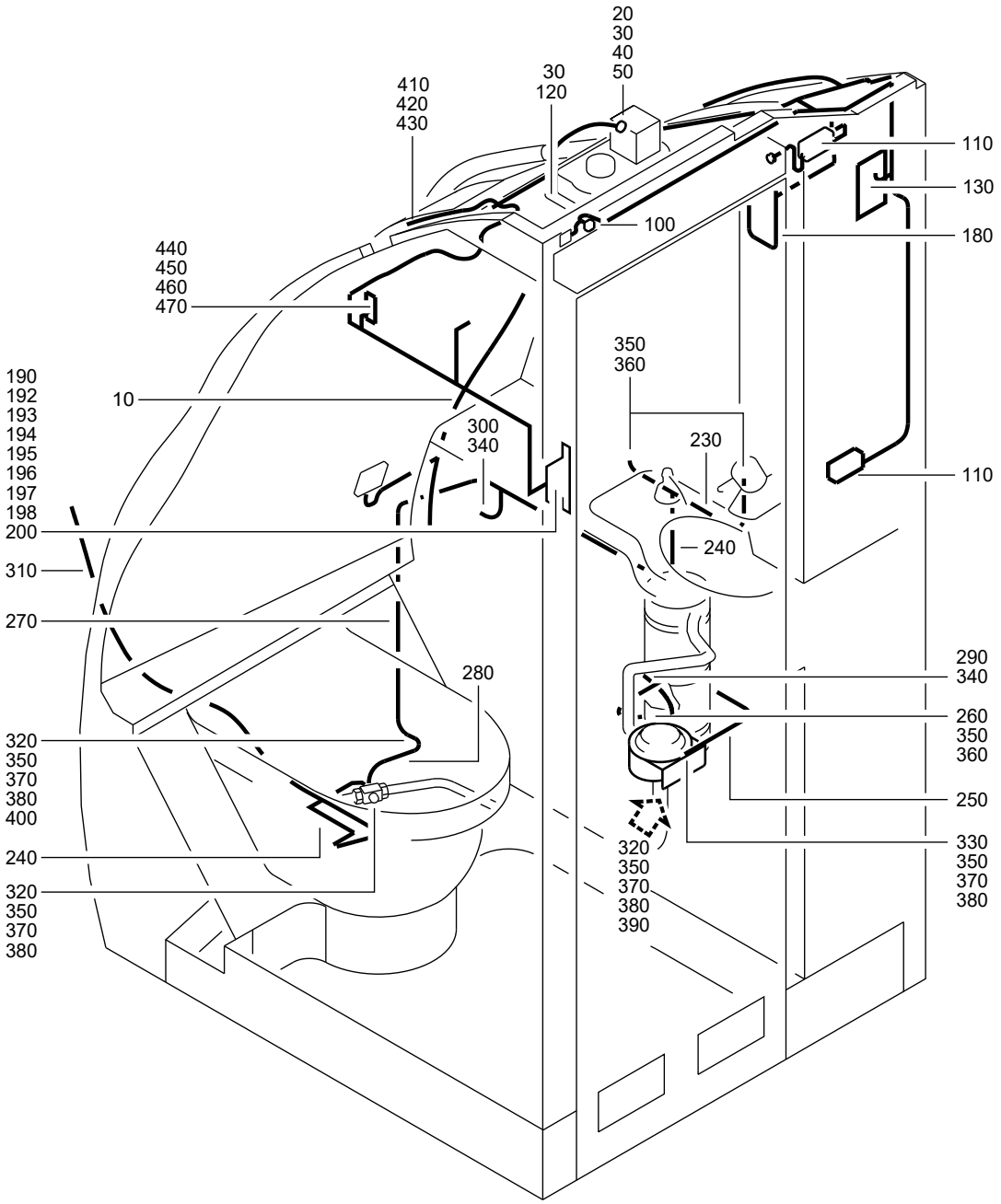

F_PL_254151_26_B_01_00

ELECTRICAL SYSTEM
Figure 26B/EN254151SHEET26B01

FIG. ITEM	PART NUMBER	AIRLINE STOCK NUMBER	NOMENCLATURE 1234567		EFF CODE	UNITS PER ASSY
26B						
-001A	D2549010501883		. ELECTRICAL SYSTEM used on 200G (254151010), 200H (25415101A), 200F (25415101B) SEE 25-41-51-010 FOR NHA SEE 25-41-51-01A FOR NHA SEE 25-41-51-01B FOR NHA	NP		RF
-001B	D2549010502283		. ELECTRICAL SYSTEM used on 200J (25415101A) SEE 25-41-51-01A FOR NHA	NP		RF
-001C	D2549010502483		. ELECTRICAL SYSTEM used on 200F (25415101A) SEE 25-41-51-01A FOR NHA	NP		RF
-001D	D2549020602883		. ELECTRICAL SYSTEM used on 200G (25415101B), 200D (25415101D), 200D (25415101G) SEE 25-41-51-01B FOR NHA SEE 25-41-51-01D FOR NHA SEE 25-41-51-01G FOR NHA	NP		RF
010A	A292901200-010		. . HARNESS-CABLE used on 001A, 001B, 001C SEE 25-41-51-270 FOR DET			001
-010B	A292901201-002		. . HARNESS ASSY-CABLE used on 001D SEE 25-41-51-270 FOR DET			001
020A	PAPE2800-00		. . DETECTOR-SMOKE used on 001A			001
-020B	PAI2830-00		. . DETECTOR-SMOKE used on 001B, 001C			001

- ITEM NOT ILLUSTRATED

FIG. ITEM	PART NUMBER	AIRLINE STOCK NUMBER	NOMENCLATURE 1234567	EFF CODE	UNITS PER ASSY
-020C	PPA1202-00		. . DETECTOR-SMOKE POST SB 26-1058 used on 001D		001
030A	AN960C8		. . WASHER BUY PN NAS1149CN832R used on 001A, 001B, 001C, 001D		012
040A	NAS1100-08-10		. . SCREW used on 001A, 001B, 001C, 001D		004
050A	A292500304-200		. . SEALING-SMOKE DETECTOR used on 001A		001
-050B	5L0064200100000		. . SEALING-SMOKE DETECTOR used on 001B, 001C, 001D		001
100A	10-1358-1		. . LIGHT-CALL used on 001A, 001B, 001C, 001D		001
110A	A292500300-200		. . BRACKET used on 001A, 001B, 001C, 001D		002
120A	NAS1096-2-7		. . SCREW BUY PN NAS1801-08-7 used on 001A, 001B, 001C, 001D		008
130A	F1101316-02		. . LIGHT ASSY used on 001A, 001B, 001C, 001D		001
-140A	F1000117-00		. . . LENS used on 130A		001
-150A	F1000118-00		. . . HOUSING used on 130A		001
-160A	356		. . . LAMP-INCANDESCENT used on 130A		001

- ITEM NOT ILLUSTRATED

FIG. ITEM	PART NUMBER	AIRLINE STOCK NUMBER	NOMENCLATURE 1234567	EFF CODE	UNITS PER ASSY
-170A	E0429-01		. . . LAMP BUY PN EN2240-7070 used on 130A		001
180A	4913211080		. . LOUDSPEAKER used on 001A, 001B, 001C, 001D		001
190A	A392500305-002		. . MICROSWITCH POST SB 25-1170 used on 001A, 001B, 001C		001
-190B	A225400225-002		. . MICROSWITCH used on 001C		001
-190C	A392500305-000		. . MICROSWITCH used on 001D		001
192A	SP4863-20		. . . SWITCH-DOOR CONTACT used on 190B		001
193A	NAS1102-06-6		. . . SCREW used on 190B		002
194A	NAS1102-08-8		. . . SCREW used on 190B		002
195A	5041-02-0030-12		. . . BUSHING-THREADED used on 190B		002
196A	A225400225-204		. . . GUIDE used on 190B		001
197A	RZ042X		. . . SPRING used on 190B		001
198A	A225400225-202		. . . ANGLE-SUPPORT used on 190B		001
200A	NAS514P832-7		. . SCREW POST SB 25-1170 used on 001A, 001B, 001D		002

- ITEM NOT ILLUSTRATED

FIG. ITEM	PART NUMBER	AIRLINE STOCK NUMBER	NOMENCLATURE 1234567	EFF CODE	UNITS PER ASSY
-200B	NAS1102-08-5		. . SCREW used on 001C		002
-210A	NSA935401-03		. . TIE-CABLE used on 001A, 001B, 001C, 001D		050
-220A	NSA935405-01		. . MOUNT USE AS REQUIRED used on 001A, 001B, 001C, 001D		AR
230A	DCIN602-0640		. . STRAP-BONDING used on 001A, 001B, 001C, 001D		001
240A	DCIN600-0900		. . STRAP-BONDING used on 001A, 001B, 001C, 001D		002
250A	DCIN600-0700		. . STRAP-BONDING used on 001A, 001B, 001C, 001D		001
260A	DCIN600-0590		. . STRAP-BONDING used on 001A, 001B, 001C, 001D		001
270A	DCIN600-1370		. . STRAP-BONDING used on 001A, 001B, 001C, 001D		001
280A	DCIN600-0380		. . STRAP-BONDING used on 001A, 001B, 001C, 001D		001
290A	DCIN600-0510		. . STRAP-BONDING used on 001A, 001B, 001C, 001D		001
300A	DCIN600-0850		. . STRAP-BONDING used on 001A, 001B, 001C, 001D		001
310A	DCIN601-0750		. . STRAP-BONDING used on 001A, 001B, 001C, 001D		001
320A	NAS1096-3-16		. . SCREW BUY PN NAS1801-3-16 used on 001A, 001B, 001C, 001D		003

- ITEM NOT ILLUSTRATED

FIG. ITEM	PART NUMBER	AIRLINE STOCK NUMBER	NOMENCLATURE 1234567	EFF CODE	UNITS PER ASSY
330A	NAS1096-3-20		. . SCREW BUY PN NAS1801-3-20 used on 001A, 001B, 001C, 001D		001
340A	NAS1096-2-6		. . SCREW BUY PN NAS1801-08-6 used on 001A, 001B, 001C, 001D		002
350A	ASNA0113-48ADL		. . WASHER used on 001A, 001B, 001C, 001D		008
360A	MS21042-3		. . NUT used on 001A, 001B, 001C, 001D		003
370A	NAS509-3		. . NUT used on 001A, 001B, 001C, 001D		004
380A	MS35338-158		. . WASHER-LOCK used on 001A, 001B, 001C, 001D		004
390A	NSA5575-7		. . CLAMP used on 001A, 001B, 001C, 001D		001
400A	NSA5575-14		. . CLAMP used on 001A, 001B, 001C, 001D		001
410A	NAS1100-04-6		. . SCREW used on 001A, 001B, 001C, 001D		004
420A	AN960C4		. . WASHER BUY PN NAS1149CN432R used on 001A, 001B, 001C, 001D		008
430A	MS21042-04		. . NUT used on 001A, 001B, 001C, 001D		008
440A	A292500303-200		. . SHEET used on 001A, 001B, 001C, 001D		001

- ITEM NOT ILLUSTRATED

FIG. ITEM	PART NUMBER	AIRLINE STOCK NUMBER	NOMENCLATURE 1234567	EFF CODE	UNITS PER ASSY
450A	NAS1096-2-5		. . SCREW BUY PN NAS1801-08-5 used on 001A, 001B, 001C, 001D		006
460A	NAS1102-04-6		. . SCREW used on 001A, 001B, 001C, 001D		002
470A	NAS1021N04		. . NUT used on 001A, 001B, 001C, 001D		006

- ITEM NOT ILLUSTRATED

THIS PAGE IS INTENTIONALLY LEFT BLANK

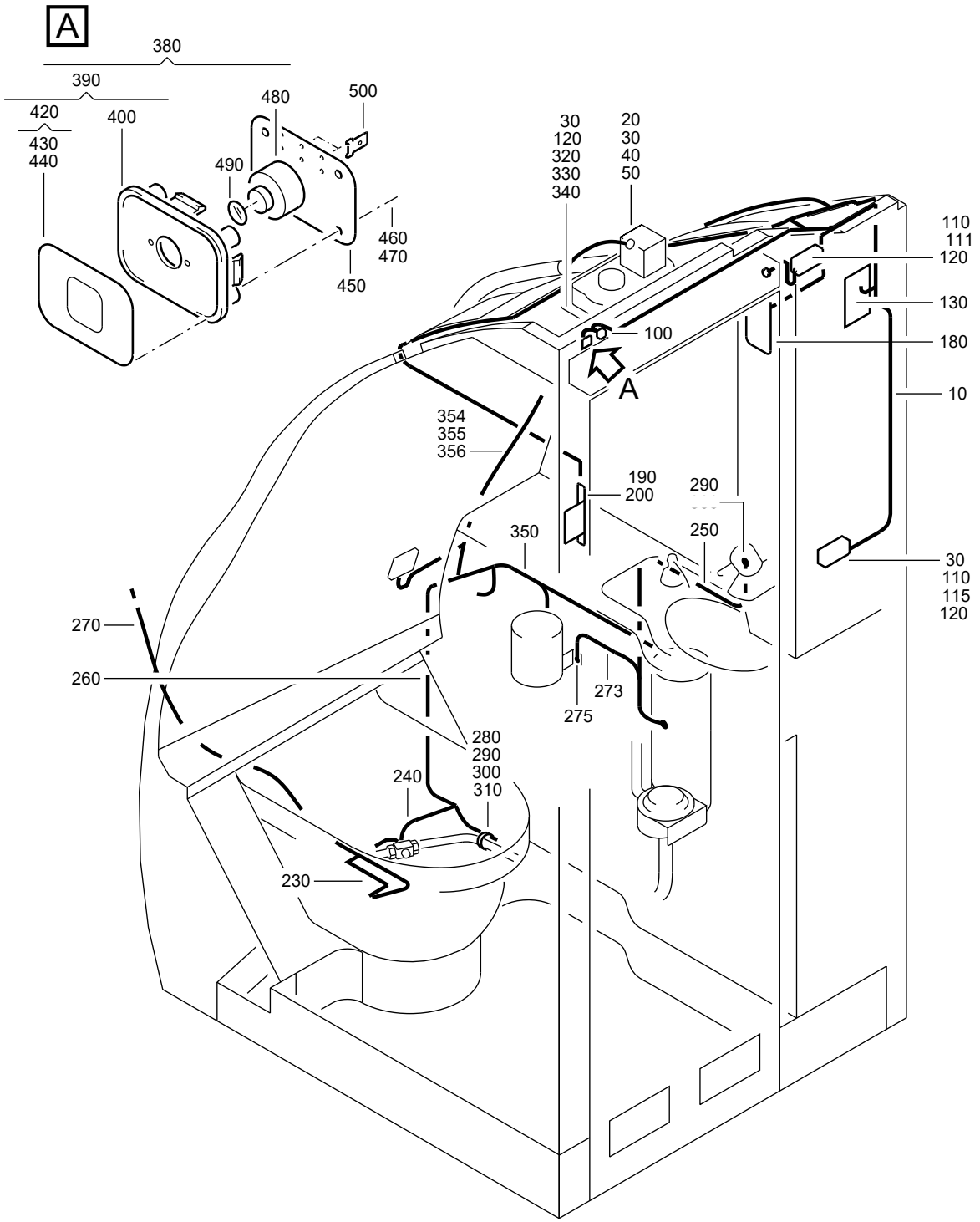

F_PL_254151_26_C_01_00

ELECTRICAL SYSTEM
Figure 26C/EN254151SHEET26C01

FIG. ITEM	PART NUMBER	AIRLINE STOCK NUMBER	NOMENCLATURE 1234567		EFF CODE	UNITS PER ASSY
26C						
-001A	D2549030504883		. ELECTRICAL SYSTEM used on 200A (25415101J), 200A (25415101K), 200A(25415101L), 200A (25415101M), 200A (25415101N), 200B(25415101P), 200A (25415101Q), 200A (25415101R), 200B(25415101S), 200A (25415101T), 200A (25415101U), 200B(25415101V), 200B (25415101W), 200B (25415101X), 200F(254151410), 200A (25415141B) SEE 25-41-51-01J FOR NHA SEE 25-41-51-01K FOR NHA SEE 25-41-51-01L FOR NHA SEE 25-41-51-01M FOR NHA SEE 25-41-51-01N FOR NHA SEE 25-41-51-01P FOR NHA SEE 25-41-51-01Q FOR NHA SEE 25-41-51-01R FOR NHA SEE 25-41-51-01S FOR NHA SEE 25-41-51-01T FOR NHA SEE 25-41-51-01U FOR NHA SEE 25-41-51-01V FOR NHA SEE 25-41-51-01W FOR NHA SEE 25-41-51-01X FOR NHA SEE 25-41-51-410 FOR NHA SEE 25-41-51-41B FOR NHA	NP		RF
-001B	D2549020506283		. ELECTRICAL SYSTEM used on 200C (25415101J), 200A (25415101P), 200C(25415101T), 200D (25415101U), 200E (25415101W) SEE 25-41-51-01J FOR NHA SEE 25-41-51-01P FOR NHA SEE 25-41-51-01T FOR NHA SEE 25-41-51-01U FOR NHA SEE 25-41-51-01W FOR NHA	NP		RF

- ITEM NOT ILLUSTRATED

FIG. ITEM	PART NUMBER	AIRLINE STOCK NUMBER	NOMENCLATURE 1234567		EFF CODE	UNITS PER ASSY
-001C	D2549010509483		. ELECTRICAL SYSTEM used on 200D (25415101J), 200B (25415101N), 200C(25415101P), 200A (25415101S), 200C (25415101Y) SEE 25-41-51-01J FOR NHA SEE 25-41-51-01N FOR NHA SEE 25-41-51-01P FOR NHA SEE 25-41-51-01S FOR NHA SEE 25-41-51-01Y FOR NHA	NP		RF
-001D	D2549010510483		. ELECTRICAL SYSTEM used on 200E (25415101J), 200B (25415101U) SEE 25-41-51-01J FOR NHA SEE 25-41-51-01U FOR NHA	NP		RF
-001E	D2549030507083		. ELECTRICAL SYSTEM used on 200B (25415101M), 200B (25415101Q) SEE 25-41-51-01M FOR NHA SEE 25-41-51-01Q FOR NHA	NP		RF
-001F	D2549010513083		. ELECTRICAL SYSTEM used on 200C (25415101N) SEE 25-41-51-01N FOR NHA	NP		RF
-001G	D2549030509483		. ELECTRICAL SYSTEM used on 200C (25415101V), 200B (25415101Y) SEE 25-41-51-01V FOR NHA SEE 25-41-51-01Y FOR NHA	NP		RF

- ITEM NOT ILLUSTRATED

FIG. ITEM	PART NUMBER	AIRLINE STOCK NUMBER	NOMENCLATURE 1234567		EFF CODE	UNITS PER ASSY
-001H	D2549030508083		. ELECTRICAL SYSTEM used on 200C (25415101S), 200G (25415101U), 200A (25415101V), 200A (25415101W), 200A (25415101X), 200A(25415101Y), 200A (25415101Z), 200A (254151410) SEE 25-41-51-01S FOR NHA SEE 25-41-51-01U FOR NHA SEE 25-41-51-01V FOR NHA SEE 25-41-51-01W FOR NHA SEE 25-41-51-01X FOR NHA SEE 25-41-51-01Y FOR NHA SEE 25-41-51-01Z FOR NHA SEE 25-41-51-410 FOR NHA	NP		RF
-001J	D2549010601283		. ELECTRICAL SYSTEM used on 200B (25415101T) SEE 25-41-51-01T FOR NHA	NP		RF
-001K	D2549030512083		. ELECTRICAL SYSTEM used on 200C (25415101Q), 200C (25415101U) SEE 25-41-51-01Q FOR NHA SEE 25-41-51-01U FOR NHA	NP		RF
-001L	D2549030511683		. ELECTRICAL SYSTEM used on 200E (25415101U) SEE 25-41-51-01U FOR NHA	NP		RF
-001M	D2549030512283		. ELECTRICAL SYSTEM used on 200F (25415101U), 200D (25415101W), 200D (25415101Y) SEE 25-41-51-01U FOR NHA SEE 25-41-51-01W FOR NHA SEE 25-41-51-01Y FOR NHA	NP		RF

- ITEM NOT ILLUSTRATED

FIG. ITEM	PART NUMBER	AIRLINE STOCK NUMBER	NOMENCLATURE 1234567		EFF CODE	UNITS PER ASSY
-001N	D2549020605683		. ELECTRICAL SYSTEM used on 200D (25415101K), 200C (25415101M), 200D (25415101Q), 200D (25415101T) SEE 25-41-51-01K FOR NHA SEE 25-41-51-01M FOR NHA SEE 25-41-51-01Q FOR NHA SEE 25-41-51-01T FOR NHA	NP		RF
-001P	D2549030413483		. ELECTRICAL SYSTEM POST SB 26-1058 used on 200D (25415101P) SEE 25-41-51-01P FOR NHA	NP		RF
-001Q	D2549010401683		. ELECTRICAL SYSTEM POST SB 26-1058 used on 200G (25415101Y) SEE 25-41-51-01Y FOR NHA	NP		RF
-001R	D2549030511183		. ELECTRICAL SYSTEM POST SB 26-1058 used on 200H (25415101U) SEE 25-41-51-01U FOR NHA	NP		RF
-001S	D2549030512183		. ELECTRICAL SYSTEM POST SB 26-1058 used on 200J (25415101U) SEE 25-41-51-01U FOR NHA	NP		RF
010A	A292901301-000		. . HARNESS ASSY-CABLE used on 001A, 001B, 001C, 001F, 001G, 001H, 001L, 001M, 001N, 001P, 001Q SEE 25-41-51-27A FOR DET			001
-010B	A292901301-006		. . HARNESS ASSY-CABLE used on 001D, 001J, 001K, 001R, 001S SEE 25-41-51-27A FOR DET			001

- ITEM NOT ILLUSTRATED

FIG. ITEM	PART NUMBER	AIRLINE STOCK NUMBER	NOMENCLATURE 1234567	EFF CODE	UNITS PER ASSY
-010C	A292901301-008		. . HARNESS ASSY-CABLE used on 001E SEE 25-41-51-27A FOR DET		001
020A	PAI2830-00		. . DETECTOR-SMOKE used on 001A, 001B, 001D, 001F, 001J, 001L		001
-020B	PAPE2800-00		. . DETECTOR-SMOKE used on 001C		001
-020C	PPA1200-00		. . DETECTOR-SMOKE used on 001G, 001H, 001K, 001M		001
-020D	PPA1202-00		. . DETECTOR-SMOKE POST SB 26-1058 used on 001E, 001G, 001H, 001K, 001M, 001N, 001P, 001Q, 001R, 001S		001
030A	NAS1149CN832R		. . WASHER used on 001A, 001B, 001C, 001D, 001E, 001F, 001G, 001H, 001J, 001K, 001L, 001M, 001N, 001P, 001Q, 001R, 001S		016
040A	NAS1100-08-10		. . SCREW used on 001A, 001B, 001C, 001D, 001E, 001F, 001G, 001H, 001J, 001K, 001L, 001M, 001N, 001P, 001Q, 001R, 001S		004
050A	5L0064200100000		. . SEALING-SMOKE DETECTOR used on 001A, 001B, 001D, 001E, 001F, 001G, 001H, 001J, 001K, 001L, 001M, 001N, 001P, 001Q, 001R, 001S		001

- ITEM NOT ILLUSTRATED

FIG. ITEM	PART NUMBER	AIRLINE STOCK NUMBER	NOMENCLATURE 1234567	EFF CODE	UNITS PER ASSY
-050B	A292500304-200		. . SEALING-SMOKE DETECTOR used on 001C		001
100A	10-1358-1		. . LIGHT-CALL used on 001A, 001B, 001C, 001D, 001E, 001F, 001G, 001H, 001J, 001K, 001L, 001M, 001N, 001P, 001Q, 001R, 001S		001
110A	A292500300-200		. . BRACKET used on 001E, 001F, 001G, 001H, 001J, 001K, 001M, 001Q, 001S		002
111A	A292500300-200		. . BRACKET used on 001A, 001B, 001C, 001D, 001L, 001N, 001P, 001R		001
115A	A292500300-220		. . BRACKET used on 001A, 001B, 001C, 001D, 001L, 001N, 001P, 001R		001
120A	NAS1096-2-7		. . SCREW BUY PN NAS1801-08-7 used on 001A, 001B, 001C, 001D, 001E, 001F, 001G, 001H, 001J, 001K, 001L, 001M, 001N, 001P, 001Q, 001R, 001S		016
130A	F1101316-02		. . LIGHT ASSY used on 001A, 001B, 001C, 001D, 001E, 001F, 001G, 001H, 001J, 001K, 001L, 001M, 001N, 001P, 001Q, 001R, 001S		001
-140A	F1000117-00		. . . LENS used on 130A		001
-150A	F1000118-00		. . . HOUSING used on 130A		001

- ITEM NOT ILLUSTRATED

FIG. ITEM	PART NUMBER	AIRLINE STOCK NUMBER	NOMENCLATURE 1234567	EFF CODE	UNITS PER ASSY
-160A	356		. . . LAMP-INCANDESCENT used on 130A		001
-170A	E0429-01		. . . LAMP BUY PN EN2240-7070 used on 130A		001
180A	4913211080		. . LOUDSPEAKER used on 001A, 001B, 001C, 001D, 001E, 001F, 001G, 001H, 001J, 001K, 001L, 001M, 001N, 001P, 001Q, 001R, 001S		001
190A	A392500305-000		. . MICROSWITCH used on 001A, 001B, 001C, 001D, 001E, 001F, 001G, 001H, 001J, 001K, 001L, 001M, 001N, 001P, 001Q, 001R, 001S		001
200A	NAS514P832-7		. . SCREW used on 001A, 001B, 001C, 001D, 001E, 001F, 001G, 001H, 001J, 001K, 001L, 001M, 001N, 001P, 001Q, 001R, 001S		002
-210A	NSA935401-03		. . TIE-CABLE used on 001A, 001B, 001C, 001D, 001E, 001F, 001G, 001H, 001J, 001K, 001L, 001M, 001N, 001P, 001Q, 001R, 001S		050
-220A	NSA935405-01		. . MOUNT used on 001A, 001B, 001C, 001D, 001E, 001F, 001G, 001H, 001J, 001K, 001L, 001M, 001N, 001P, 001Q, 001R, 001S		025

- ITEM NOT ILLUSTRATED

FIG. ITEM	PART NUMBER	AIRLINE STOCK NUMBER	NOMENCLATURE 1234567	EFF CODE	UNITS PER ASSY
230A	DCIN600-0510		. . STRAP-BONDING used on 001A, 001B, 001C, 001D, 001E, 001F, 001G, 001H, 001J, 001K, 001L, 001M, 001N, 001P, 001Q, 001R, 001S		001
240A	DCIN600-0510		. . STRAP-BONDING used on 001A, 001B, 001C, 001D, 001E, 001F, 001G, 001H, 001J, 001K, 001L, 001M, 001N, 001P, 001Q, 001R, 001S		001
250A	DCIN600-0510		. . STRAP-BONDING used on 001A, 001B, 001C, 001D, 001E, 001F, 001G, 001H, 001J, 001K, 001L, 001M, 001N, 001P, 001Q, 001R, 001S		001
260A	DCIN600-1580		. . STRAP-BONDING used on 001A, 001B, 001C, 001D, 001E, 001F, 001G, 001H, 001J, 001K, 001L, 001M, 001N, 001P, 001Q, 001R, 001S		001
270A	DCIN601-0620		. . STRAP-BONDING used on 001A, 001B, 001C, 001D, 001E, 001F, 001G, 001H, 001J, 001K, 001L, 001M, 001N, 001P, 001Q, 001R, 001S		001
273A	DCIN600-0510		. . STRAP-BONDING used on 001B, 001G		001
275A	NAS1096-2-6		. . SCREW BUY PN NAS1801-08-6 used on 001B, 001G		001

- ITEM NOT ILLUSTRATED

FIG. ITEM	PART NUMBER	AIRLINE STOCK NUMBER	NOMENCLATURE 1234567	EFF CODE	UNITS PER ASSY
280A	NAS1096-3-16		. . SCREW BUY PN NAS1801-3-16 used on 001A, 001B, 001C, 001D, 001E, 001F, 001G, 001H, 001J, 001K, 001L, 001M, 001N, 001P, 001Q, 001R, 001S		001
290A	ASNA0113-48ADL		. . WASHER USE AS REQUIRED USAGE RANGE FROM 2 TO 3 used on 001A, 001B, 001C, 001D, 001E, 001F, 001G, 001H, 001J, 001K, 001L, 001M, 001N, 001P, 001Q, 001R, 001S		AR
300A	MS21042-3		. . NUT used on 001A, 001B, 001C, 001D, 001E, 001F, 001G, 001H, 001J, 001K, 001L, 001M, 001N, 001P, 001Q, 001R, 001S		001
310A	NSA5575-7		. . CLAMP used on 001A, 001B, 001C, 001D, 001E, 001F, 001G, 001H, 001J, 001K, 001L, 001M, 001N, 001P, 001Q, 001R, 001S		001
320A	NAS1149CN432R		. . WASHER used on 001A, 001B, 001C, 001D, 001E, 001F, 001G, 001H, 001J, 001K, 001L, 001M, 001N, 001P, 001Q, 001R, 001S		008
330A	NAS1100-04-6		. . SCREW used on 001A, 001B, 001C, 001D, 001E, 001F, 001G, 001H, 001J, 001K, 001L, 001M, 001N, 001P, 001Q, 001R, 001S		004

- ITEM NOT ILLUSTRATED

FIG. ITEM	PART NUMBER	AIRLINE STOCK NUMBER	NOMENCLATURE 1234567	EFF CODE	UNITS PER ASSY
340A	MS21042-04		. . NUT used on 001A, 001B, 001C, 001D, 001E, 001F, 001G, 001H, 001J, 001K, 001L, 001M, 001N, 001P, 001Q, 001R, 001S		008
350A	A292901310-000		. . CABLE-CABIN ATTENDANT SEAT,AMI used on 001A, 001B, 001C, 001D, 001E, 001F, 001G, 001H, 001J, 001K, 001L, 001M, 001N, 001P, 001Q, 001R, 001S		001
-352A	NSA938151PA2000		. . . CONTACT-PIN BUY PN EN3155-018M2018 used on 350A		026
-353A	NSA938152SA2000		. . . CONTACT-SOCKET BUY PN EN3155-019F2018 used on 350A		019
354A	E0052R14B19SNE		. . . CONNECTOR-PLUG used on 350A		001
355A	ABS0638B14		. . . BACKSHELL-CONNECTOR used on 350A		001
356A	ABS0364B26PC		. . . CONNECTOR-PLUG BUY PN ABS0364B26P used on 350A		001
-357A	ABS0364C		. . . BRACKET-CABLE used on 350A		001
-358A	ABS0364D		. . . CAP-PROTECTIVE used on 350A		001
380A	D9259036500200		. . PANEL-SWITCH,2065VU used on 001C, 001D, 001K, 001L, 001M, 001R, 001S		001

- ITEM NOT ILLUSTRATED

FIG. ITEM	PART NUMBER	AIRLINE STOCK NUMBER	NOMENCLATURE 1234567	EFF CODE	UNITS PER ASSY
390A	D9259018203400		. . . HOUSING ASSY-SWITCH used on 380A		001
400A	D9259018400800		. . . . HOUSING-SWITCH used on 390A		001
420A	D9259024203400		. . . . FOIL ASSY used on 390A		001
430A	D9259024223400		. . . . . FOIL used on 420A		001
440A	D9259018220200		. . . . . FILM-ADHESIVE used on 420A		001
450A	D9259023820600		. . . PCB-PRINTED CIRCUIT BOARD used on 380A		001
460A	NAS1100E04-5		. . . SCREW used on 380A		004
470A	DIN137A3B2C		. . . WASHER-SPRING BUY PN DIN137B3B2C used on 380A		004
480A	811215100		. . . SWITCH-BUTTON,SWITCH used on 380A		001
490A	800003511		. . . LENS-PROTECTIVE used on 380A		001
500A	726388-3		. . . PLUG used on 380A		002

- ITEM NOT ILLUSTRATED

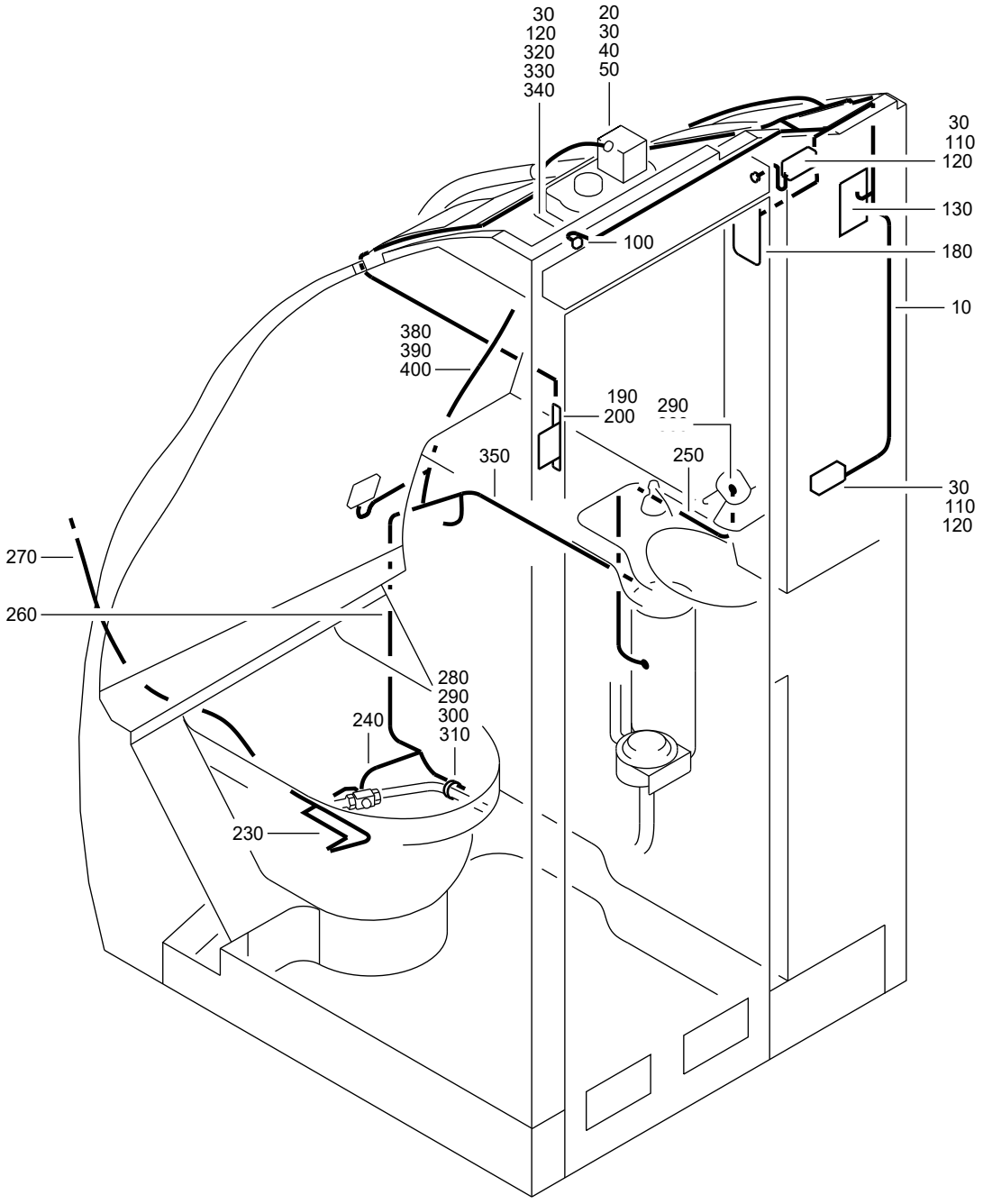

F_PL_254151_26_D_01_00

ELECTRICAL SYSTEM
Figure 26D/EN254151SHEET26D01

FIG. ITEM	PART NUMBER	AIRLINE STOCK NUMBER	NOMENCLATURE 1234567		EFF CODE	UNITS PER ASSY
26D						
-001A	D2549030509883		. ELECTRICAL SYSTEM used on 200C (25415101W) SEE 25-41-51-01W FOR NHA	NP		RF
-001B	D2549010514883		. ELECTRICAL SYSTEM used on 200D (25415101V) SEE 25-41-51-01V FOR NHA	NP		RF
-001C	D2549010513683		. ELECTRICAL SYSTEM used on 200C (25415101X) SEE 25-41-51-01X FOR NHA	NP		RF
-001D	D2549010601483		. ELECTRICAL SYSTEM used on 200C (25415141B) SEE 25-41-51-41B FOR NHA	NP		RF
-001E	D2549010601583		. ELECTRICAL SYSTEM POST SB 26-1058 used on 200D (25415101X) SEE 25-41-51-01X FOR NHA	NP		RF
-001F	D2549010513783		. ELECTRICAL SYSTEM POST SB 26-1058 used on 200H (25415141B) SEE 25-41-51-41B FOR NHA	NP		RF
010A	A292901301-008		. . HARNESS ASSY-CABLE used on 001A SEE 25-41-51-27A FOR DET			001
-010B	A292901301-000		. . HARNESS ASSY-CABLE used on 001B, 001D, 001F SEE 25-41-51-27A FOR DET			001
-010C	A292901301-006		. . HARNESS ASSY-CABLE used on 001C, 001E SEE 25-41-51-27A FOR DET			001

- ITEM NOT ILLUSTRATED

FIG. ITEM	PART NUMBER	AIRLINE STOCK NUMBER	NOMENCLATURE 1234567	EFF CODE	UNITS PER ASSY
020A	PPA1200-00		. . DETECTOR-SMOKE POST SB 26-1058 used on 001A, 001B, 001C		001
-020B	PAI2830-00		. . DETECTOR-SMOKE used on 001D		001
-020C	PPA1202-00		. . DETECTOR-SMOKE POST SB 26-1058 used on 001A, 001B, 001C, 001E, 001F		001
030A	NAS1149CN832R		. . WASHER used on 001A, 001B, 001C, 001D, 001E, 001F		016
040A	NAS1100-08-10		. . SCREW used on 001A, 001B, 001C, 001D, 001E, 001F		004
050A	5L0064200100000		. . SEALING-SMOKE DETECTOR used on 001A, 001B, 001C, 001D, 001E, 001F		001
100A	10-1358-1		. . LIGHT-CALL used on 001A, 001B		001
-100B	F1000240-01		. . LIGHT-CALL POST SB 25-1554 used on 001C, 001D, 001E, 001F		001
110A	A292500300-200		. . BRACKET used on 001A, 001B, 001C, 001D, 001E, 001F		002
120A	NAS1096-2-7		. . SCREW BUY PN NAS1801-08-7 used on 001A, 001B, 001C, 001D, 001E, 001F		016

- ITEM NOT ILLUSTRATED

FIG. ITEM	PART NUMBER	AIRLINE STOCK NUMBER	NOMENCLATURE 1234567	EFF CODE	UNITS PER ASSY
130A	F1101316-02		. . LIGHT ASSY used on 001A, 001B		001
-130B	F1000270-00		. . LIGHT ASSY POST SB 25-1554 used on 001C, 001D, 001E, 001F		001
-140A	F1000117-00		. . . LENS used on 130A, 130B		001
-150A	F1000118-00		. . . HOUSING used on 130A, 130B		001
-160A	356		. . . LAMP-INCANDESCENT used on 130A, 130B		001
-170A	E0429-01		. . . LAMP BUY PN EN2240-7070 used on 130A, 130B		001
180A	4913211080		. . LOUDSPEAKER used on 001A, 001B, 001C, 001D, 001E, 001F		001
190A	A392500305-000		. . MICROSWITCH used on 001A, 001B, 001C, 001D, 001E, 001F		001
200A	NAS514P832-7		. . SCREW used on 001A, 001B, 001C, 001D, 001E, 001F		002
-210A	NSA935401-03		. . TIE-CABLE used on 001A, 001B, 001C, 001D, 001E, 001F		050
-220A	NSA935405-01		. . MOUNT used on 001A, 001B, 001C, 001D, 001E, 001F		025

- ITEM NOT ILLUSTRATED

FIG. ITEM	PART NUMBER	AIRLINE STOCK NUMBER	NOMENCLATURE 1234567	EFF CODE	UNITS PER ASSY
230A	DCIN600-0510		. . STRAP-BONDING used on 001A, 001B, 001C, 001D, 001E, 001F		001
240A	DCIN600-0510		. . STRAP-BONDING used on 001A, 001B, 001C, 001D, 001E, 001F		001
250A	DCIN600-0510		. . STRAP-BONDING used on 001A, 001B, 001C, 001D, 001E, 001F		001
260A	DCIN600-1580		. . STRAP-BONDING used on 001A, 001B, 001C, 001D, 001E, 001F		001
270A	DCIN601-0620		. . STRAP-BONDING used on 001A, 001B, 001C, 001D, 001E, 001F		001
280A	NAS1096-3-16		. . SCREW BUY PN NAS1801-3-16 used on 001A, 001B, 001C, 001D, 001E, 001F		001
290A	ASNA0113-48ADL		. . WASHER used on 001A, 001B, 001C, 001D, 001E, 001F		002
300A	MS21042-3		. . NUT used on 001A, 001B, 001C, 001D, 001E, 001F		001
310A	NSA5575-7		. . CLAMP used on 001A, 001B, 001C, 001D, 001E, 001F		001
320A	NAS1149CN432R		. . WASHER used on 001A, 001B, 001C, 001D, 001E, 001F		008

- ITEM NOT ILLUSTRATED

FIG. ITEM	PART NUMBER	AIRLINE STOCK NUMBER	NOMENCLATURE 1234567	EFF CODE	UNITS PER ASSY
330A	NAS1100-04-6		. . SCREW used on 001A, 001B, 001C, 001D, 001E, 001F		004
340A	MS21042-04		. . NUT used on 001A, 001B, 001C, 001D, 001E, 001F		008
350A	A292901310-000		. . CABLE-CABIN ATTENDANT SEAT,AMI used on 001A, 001B, 001C, 001D, 001E, 001F		001
-360A	NSA938151PA2000		. . . CONTACT-PIN BUY PN EN3155-018M2018 used on 350A		026
-370A	NSA938152SA2000		. . . CONTACT-SOCKET BUY PN EN3155-019F2018 used on 350A		019
380A	E0052R14B19SNE		. . . CONNECTOR-PLUG used on 350A		001
390A	ABS0638B14		. . . BACKSHELL-CONNECTOR used on 350A		001
400A	ABS0364B26PC		. . . CONNECTOR-PLUG BUY PN ABS0364B26P used on 350A		001
-410A	ABS0364C		. . . BRACKET-CABLE used on 350A		001
-420A	ABS0364D		. . . CAP-PROTECTIVE used on 350A		001

- ITEM NOT ILLUSTRATED

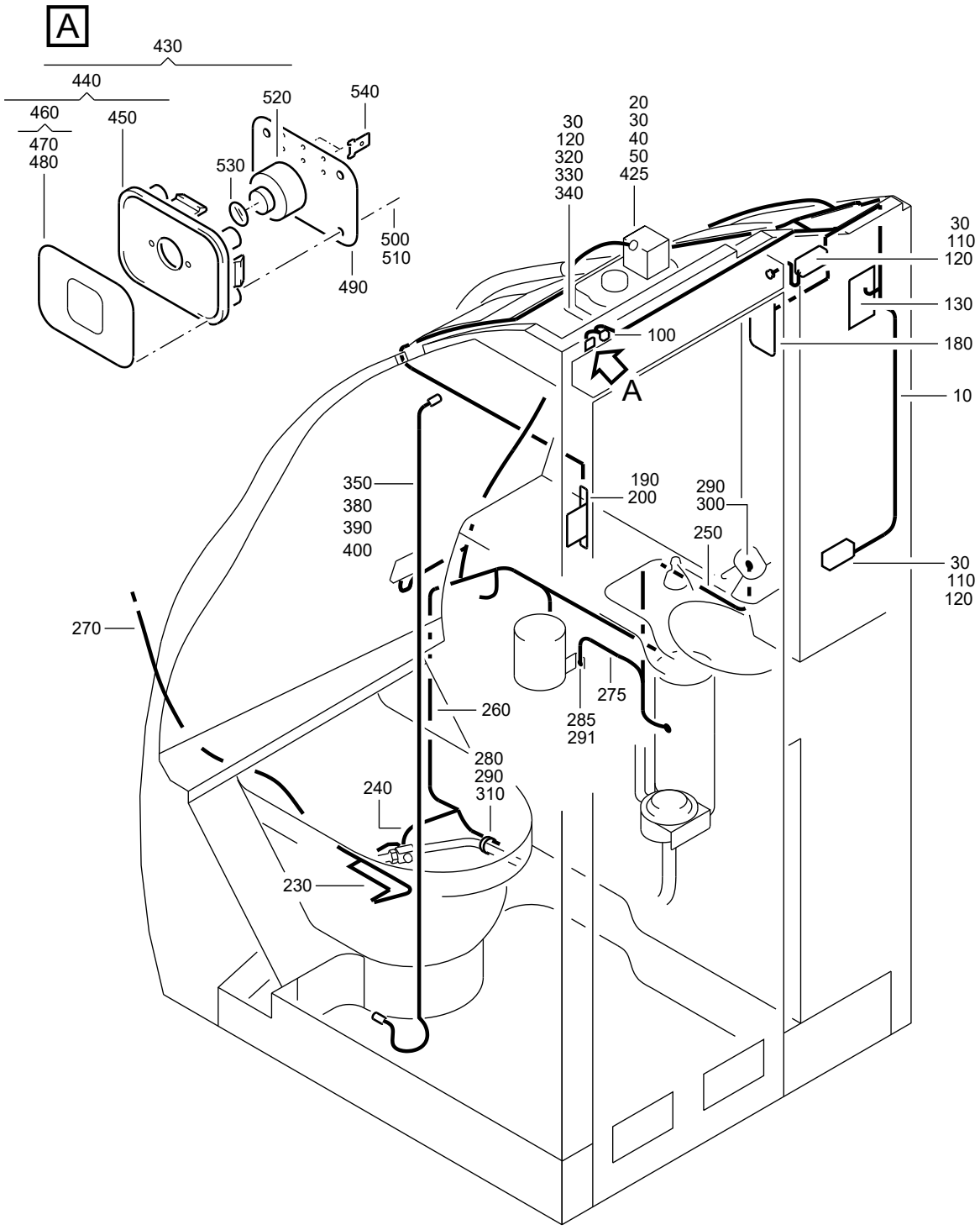

F_PL_254151_26_E_01_00

ELECTRICAL SYSTEM
Figure 26E/EN254151SHEET26E01

FIG. ITEM	PART NUMBER	AIRLINE STOCK NUMBER	NOMENCLATURE 1234567		EFF CODE	UNITS PER ASSY
26E						
-001A	D2549010603883		. ELECTRICAL SYSTEM PRE VSB A2-254-25-130 used on 200F (25415101Y), 200C (25415101Z), 200G (254151410), 200A (25415141A), 200A (25415141C), 200A (25415141D) SEE 25-41-51-01Y FOR NHA SEE 25-41-51-01Z FOR NHA SEE 25-41-51-410 FOR NHA SEE 25-41-51-41A FOR NHA SEE 25-41-51-41C FOR NHA SEE 25-41-51-41D FOR NHA	NP		RF
-001B	D2549030514883		. ELECTRICAL SYSTEM used on 200D (254151410) SEE 25-41-51-410 FOR NHA	NP		RF
-001C	D2549030604683		. ELECTRICAL SYSTEM used on 200E (25415101Y), 200B (25415101Z), 200C(254151410), 200D (25415141B) SEE 25-41-51-01Y FOR NHA SEE 25-41-51-01Z FOR NHA SEE 25-41-51-410 FOR NHA SEE 25-41-51-41B FOR NHA	NP		RF
-001D	D2549030603883		. ELECTRICAL SYSTEM used on 200E (25415141B) SEE 25-41-51-41B FOR NHA	NP		RF
-001E	D2549010603683		. ELECTRICAL SYSTEM used on 200B (254151410), 200B (25415141A) SEE 25-41-51-410 FOR NHA SEE 25-41-51-41A FOR NHA	NP		RF

- ITEM NOT ILLUSTRATED

FIG. ITEM	PART NUMBER	AIRLINE STOCK NUMBER	NOMENCLATURE 1234567		EFF CODE	UNITS PER ASSY
-001F	D2549030605083		. ELECTRICAL SYSTEM used on 200B (25415141C) SEE 25-41-51-41C FOR NHA	NP		RF
-001G	D2549030513283		. ELECTRICAL SYSTEM POST SB 26-1058 used on 200E (25415101V) SEE 25-41-51-01V FOR NHA	NP		RF
-001H	D2549030604883		. ELECTRICAL SYSTEM used on 200E (25415101Z), 200F (25415141A), 200F(25415141B) SEE 25-41-51-01Z FOR NHA SEE 25-41-51-41A FOR NHA SEE 25-41-51-41B FOR NHA	NP		RF
-001J	D2549030514983		. ELECTRICAL SYSTEM POST SB 26-1058 used on 200H (254151410) SEE 25-41-51-410 FOR NHA	NP		RF
-001K	D2549030514783		. ELECTRICAL SYSTEM POST SB 26-1058 used on 200H (25415101Y) SEE 25-41-51-01Y FOR NHA	NP		RF
-001L	R22540119604683		. ELECTRICAL SYSTEM POST VSB A2-254-25-130 used on 200J (254151410) SEE 25-41-51-410 FOR NHA	NP		RF
010A	A292901301-000		. . HARNESS ASSY-CABLE used on 001A, 001C, 001D, 001G, 001H, 001K, 001L SEE 25-41-51-27A FOR DET			001
-010B	A292901301-006		. . HARNESS ASSY-CABLE used on 001B, 001E, 001J SEE 25-41-51-27A FOR DET			001

- ITEM NOT ILLUSTRATED

FIG. ITEM	PART NUMBER	AIRLINE STOCK NUMBER	NOMENCLATURE 1234567	EFF CODE	UNITS PER ASSY
-010C	A292901301-008		. . HARNESS ASSY-CABLE used on 001F SEE 25-41-51-27A FOR DET		001
020A	PPA1201-00		. . DETECTOR-SMOKE used on 001A, 001B, 001C, 001D, 001E, 001L		001
-020B	PPA1202-00		. . DETECTOR-SMOKE POST SB 26-1058 used on 001A, 001B, 001C, 001D, 001E, 001F, 001G, 001H, 001J, 001K, 001L		001
030A	NAS1149CN832R		. . WASHER used on 001A, 001B, 001C, 001D, 001E, 001F, 001G, 001H, 001J, 001K, 001L		016
040A	NAS1100-08-8		. . SCREW used on 001A, 001B, 001C, 001D, 001E, 001F, 001G, 001H, 001J, 001K, 001L		004
050A	5L0064200100000		. . SEALING-SMOKE DETECTOR used on 001A, 001B, 001C, 001D, 001E, 001F, 001G, 001H, 001J, 001K, 001L		001
100A	10-1358-1		. . LIGHT-CALL used on 001A, 001B, 001C, 001D, 001E, 001F, 001H, 001J, 001K, 001L		001
-100B	F1000240-01		. . LIGHT-CALL POST SB 25-1315 used on 001G		001

- ITEM NOT ILLUSTRATED

FIG. ITEM	PART NUMBER	AIRLINE STOCK NUMBER	NOMENCLATURE 1234567	EFF CODE	UNITS PER ASSY
110A	A292500300-200		. . BRACKET used on 001A, 001B, 001C, 001D, 001E, 001F, 001G, 001H, 001J, 001K, 001L		002
120A	NAS1096-2-7		. . SCREW BUY PN NAS1801-08-7 used on 001A, 001B, 001C, 001D, 001E, 001F, 001G, 001H, 001J, 001K, 001L		016
130A	F1101316-02		. . LIGHT ASSY used on 001A, 001B, 001C, 001D, 001E, 001F, 001G, 001H, 001J, 001K, 001L		001
-140A	F1000117-00		. . . LENS used on 130A		001
-150A	F1000118-00		. . . HOUSING used on 130A		001
-160A	356		. . . LAMP-INCANDESCENT used on 130A		001
-170A	E0429-01		. . . LAMP BUY PN EN2240-7070 used on 130A		001
180A	4913211080		. . LOUDSPEAKER used on 001A, 001B, 001C, 001D, 001E, 001F, 001G, 001H, 001J, 001K, 001L		001
190A	A392500305-000		. . MICROSWITCH used on 001A, 001B, 001C, 001D, 001E, 001F, 001G, 001H, 001J, 001K, 001L		001

- ITEM NOT ILLUSTRATED

FIG. ITEM	PART NUMBER	AIRLINE STOCK NUMBER	NOMENCLATURE 1234567	EFF CODE	UNITS PER ASSY
200A	NAS514P832-7		. . SCREW used on 001A, 001B, 001C, 001D, 001E, 001F, 001G, 001H, 001J, 001K, 001L		002
-210A	NSA935401-03		. . TIE-CABLE used on 001A, 001B, 001C, 001D, 001E, 001F, 001G, 001H, 001J, 001K, 001L		050
-220A	NSA935405-01		. . MOUNT used on 001A, 001B, 001C, 001D, 001E, 001F, 001G, 001H, 001J, 001K, 001L		025
230A	DCIN600-0510		. . STRAP-BONDING used on 001A, 001B, 001C, 001D, 001E, 001F, 001G, 001H, 001J, 001K, 001L		001
240A	DCIN600-0510		. . STRAP-BONDING used on 001A, 001B, 001C, 001D, 001E, 001F, 001G, 001H, 001J, 001K, 001L		001
250A	DCIN600-0510		. . STRAP-BONDING used on 001A, 001B, 001C, 001D, 001E, 001F, 001G, 001H, 001J, 001K, 001L		001
-255A	DCIN600-0280		. . STRAP-BONDING POST VSB A2-254-25-130 used on 001L		001
260A	DCIN600-1580		. . STRAP-BONDING used on 001A, 001B, 001C, 001D, 001E, 001F, 001G, 001H, 001J, 001K, 001L		001

- ITEM NOT ILLUSTRATED

FIG. ITEM	PART NUMBER	AIRLINE STOCK NUMBER	NOMENCLATURE 1234567	EFF CODE	UNITS PER ASSY
270A	DCIN601-0620		. . STRAP-BONDING used on 001A, 001B, 001C, 001D, 001E, 001F, 001G, 001H, 001J, 001K, 001L		001
275A	DCIN600-0510		. . STRAP-BONDING used on 001D		001
280A	NAS1096-3-16		. . SCREW BUY PN NAS1801-3-16 used on 001A, 001B, 001C, 001D, 001E, 001F, 001G, 001H, 001J, 001K, 001L		001
285A	NAS1096-2-6		. . SCREW BUY PN NAS1801-08-6 used on 001D		001
290A	ASNA0113-48ADL		. . WASHER used on 001A, 001B, 001C, 001E, 001F, 001G, 001H, 001J, 001K, 001L		002
291A	ASNA0113-48ADL		. . WASHER used on 001D		003
-292A	ASNA0113-40ADL		. . WASHER POST VSB A2-254-25-130 used on 001L		001
300A	MS21042-3		. . NUT used on 001A, 001B, 001C, 001D, 001E, 001F, 001G, 001H, 001J, 001K, 001L		001
-305A	MS21042-08		. . NUT POST VSB A2-254-25-130 used on 001L		001

- ITEM NOT ILLUSTRATED

FIG. ITEM	PART NUMBER	AIRLINE STOCK NUMBER	NOMENCLATURE 1234567	EFF CODE	UNITS PER ASSY
310A	NSA5575-7		. . CLAMP used on 001A, 001B, 001C, 001D, 001E, 001F, 001G, 001H, 001J, 001K, 001L		001
320A	NAS1149CN432R		. . WASHER used on 001A, 001B, 001C, 001D, 001E, 001F, 001G, 001H, 001J, 001K, 001L		008
330A	NAS1100-04-6		. . SCREW used on 001A, 001B, 001C, 001D, 001E, 001F, 001G, 001H, 001J, 001K, 001L		004
340A	MS21042-04		. . NUT used on 001A, 001B, 001C, 001D, 001E, 001F, 001G, 001H, 001J, 001K, 001L		008
350A	A292901310-000		. . CABLE-CABIN ATTENDANT SEAT,AMI used on 001A, 001B, 001C, 001D, 001E, 001F, 001G, 001H, 001J, 001K, 001L		001
-360A	NSA938151PA2000		. . . CONTACT-PIN BUY PN EN3155-018M2018 used on 350A		026
-370A	NSA938152SA2000		. . . CONTACT-SOCKET BUY PN EN3155-019F2018 used on 350A		019
380A	E0052R14B19SNE		. . . CONNECTOR-PLUG used on 350A		001
390A	ABS0638B14		. . . BACKSHELL-CONNECTOR used on 350A		001

- ITEM NOT ILLUSTRATED

FIG. ITEM	PART NUMBER	AIRLINE STOCK NUMBER	NOMENCLATURE 1234567	EFF CODE	UNITS PER ASSY
400A	ABS0364B26PC		. . . CONNECTOR-PLUG BUY PN ABS0364B26P used on 350A		001
-410A	ABS0364C		. . . BRACKET-CABLE used on 350A		001
-420A	ABS0364D		. . . CAP-PROTECTIVE used on 350A		001
425A	MS21042-06		. . NUT used on 001A, 001B, 001C, 001D, 001E, 001F, 001G, 001H, 001J, 001K, 001L		004
430A	D9259036500200		. . PANEL-SWITCH,2065VU used on 001B, 001C, 001J		001
440A	D9259018203400		. . . HOUSING ASSY-SWITCH used on 430A		001
450A	D9259018400800		. . . . HOUSING-SWITCH used on 440A		001
460A	D9259024203400		. . . . FOIL ASSY used on 440A		001
470A	D9259024223400		. . . . . FOIL used on 460A		001
480A	D9259018220200		. . . . . FILM-ADHESIVE used on 460A		001
490A	D9259023820600		. . . PCB-PRINTED CIRCUIT BOARD used on 430A		001
500A	NAS1100E04-5		. . . SCREW used on 430A		004

- ITEM NOT ILLUSTRATED

FIG. ITEM	PART NUMBER	AIRLINE STOCK NUMBER	NOMENCLATURE 1234567	EFF CODE	UNITS PER ASSY
510A	DIN137A3B2C		. . . WASHER-SPRING BUY PN DIN137B3B2C used on 430A		004
520A	811215100		. . . SWITCH-BUTTON,SWITCH used on 430A		001
530A	800003511		. . . LENS-PROTECTIVE used on 430A		001
540A	726388-3		. . . PLUG used on 430A		002

- ITEM NOT ILLUSTRATED

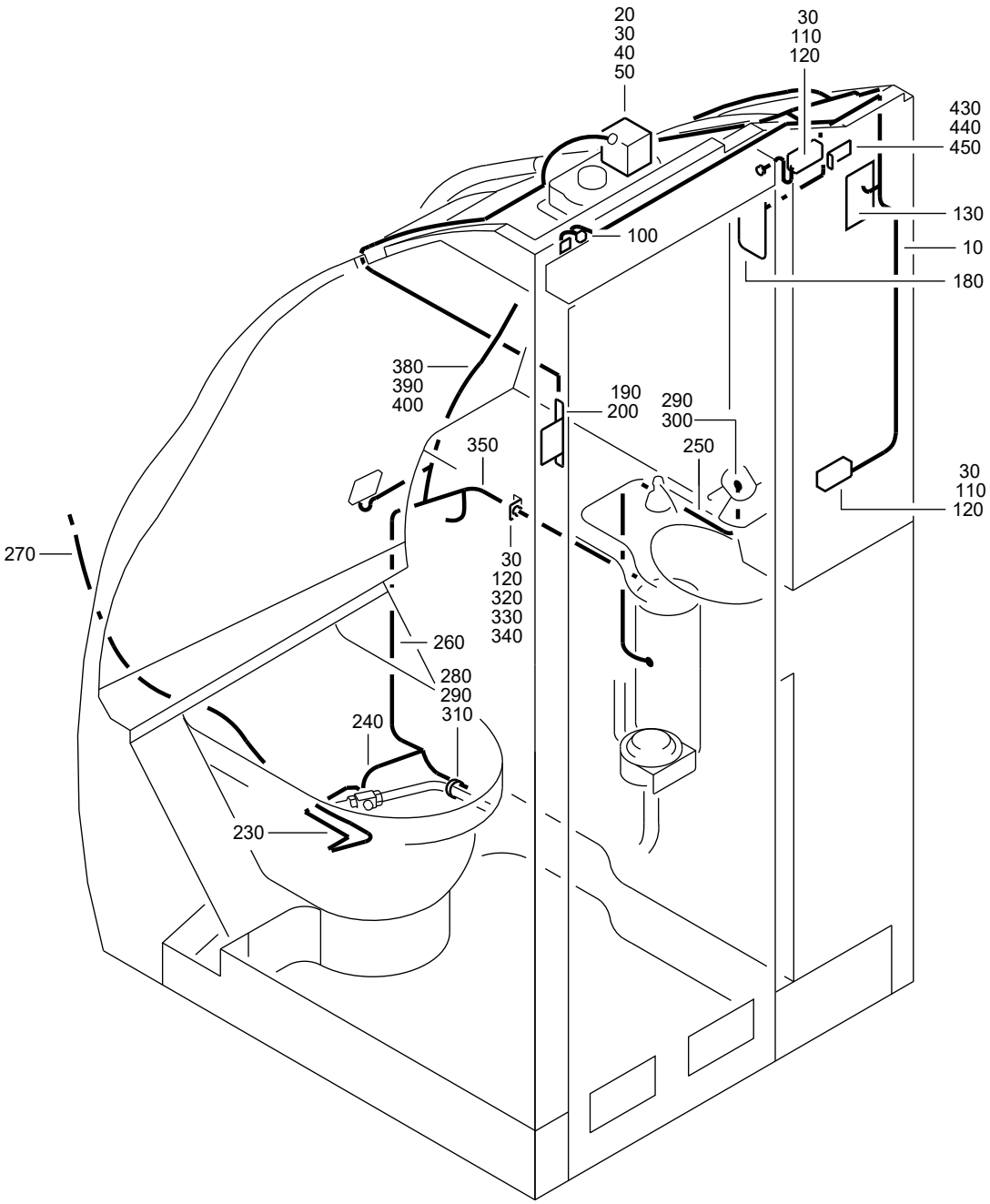

F_PL_254151_26_F_01_00

ELECTRICAL SYSTEM
Figure 26F/EN254151SHEET26F01

FIG. ITEM	PART NUMBER	AIRLINE STOCK NUMBER	NOMENCLATURE 1234567	EFF CODE	UNITS PER ASSY
26F					
-001A	D2549030605283		. ELECTRICAL SYSTEM NP used on 200C (25415141A), 200G (25415141B), 200B (25415141D), 200A (25415141F) SEE 25-41-51-41A FOR NHA SEE 25-41-51-41B FOR NHA SEE 25-41-51-41D FOR NHA SEE 25-41-51-41F FOR NHA		RF
-001B	D2549030602083		. ELECTRICAL SYSTEM NP used on 200D (25415101Z) SEE 25-41-51-01Z FOR NHA		RF
-001C	D2549030602883		. ELECTRICAL SYSTEM NP used on 200D (25415141D) SEE 25-41-51-41D FOR NHA		RF
-001D	D2549030413083		. ELECTRICAL SYSTEM NP POST SB 26-1058 used on 200C (25415141F) SEE 25-41-51-41F FOR NHA		RF
010A	A292901303-000		. . HARNESS ASSY-CABLE used on 001A, 001C, 001D SEE 25-41-51-27B FOR DET		001
-010B	A292901303-008		. . HARNESS ASSY-CABLE used on 001B SEE 25-41-51-27B FOR DET		001
020A	PPA1201-00		. . DETECTOR-SMOKE used on 001A		001
-020B	PPA1202-00		. . DETECTOR-SMOKE POST SB 26-1058 used on 001A, 001B, 001C, 001D		001
030A	NAS1149CN832R		. . WASHER used on 001A, 001B, 001C, 001D		016

- ITEM NOT ILLUSTRATED

FIG. ITEM	PART NUMBER	AIRLINE STOCK NUMBER	NOMENCLATURE 1234567	EFF CODE	UNITS PER ASSY
040A	NAS1100-08-8		. . SCREW used on 001A, 001B, 001C, 001D		004
050A	5L0064200100000		. . SEALING-SMOKE DETECTOR used on 001A, 001B, 001C, 001D		001
100A	10-1358-1		. . LIGHT-CALL used on 001A, 001B, 001C, 001D		001
110A	A292500300-200		. . BRACKET used on 001A, 001B, 001C, 001D		002
120A	NAS1096-2-7		. . SCREW BUY PN NAS1801-08-7 used on 001A, 001B, 001C, 001D		016
130A	F1101316-02		. . LIGHT ASSY used on 001A, 001B, 001C, 001D		001
-140A	F1000117-00		. . . LENS used on 130A		001
-150A	F1000118-00		. . . HOUSING used on 130A		001
-160A	356		. . . LAMP-INCANDESCENT used on 130A		001
-170A	E0429-01		. . . LAMP BUY PN EN2240-7070 used on 130A		001
180A	4913211080		. . LOUDSPEAKER used on 001A, 001B, 001C, 001D		001
190A	A392500305-000		. . MICROSWITCH used on 001A, 001B, 001C, 001D		001
200A	NAS514P832-7		. . SCREW used on 001A, 001B, 001C, 001D		002

- ITEM NOT ILLUSTRATED

FIG. ITEM	PART NUMBER	AIRLINE STOCK NUMBER	NOMENCLATURE 1234567	EFF CODE	UNITS PER ASSY
-210A	NSA935401-03		. . TIE-CABLE used on 001A, 001B, 001C, 001D		050
-220A	NSA935405-01		. . MOUNT used on 001A, 001B, 001C, 001D		025
230A	DCIN600-0510		. . STRAP-BONDING used on 001A, 001B, 001C, 001D		001
240A	DCIN600-0510		. . STRAP-BONDING used on 001A, 001B, 001C, 001D		001
250A	DCIN600-0510		. . STRAP-BONDING used on 001A, 001B, 001C, 001D		001
260A	DCIN600-1580		. . STRAP-BONDING used on 001A, 001B, 001C, 001D		001
270A	DCIN601-0620		. . STRAP-BONDING used on 001A, 001B, 001C, 001D		001
280A	NAS1096-3-16		. . SCREW BUY PN NAS1801-3-16 used on 001A, 001B, 001C, 001D		001
290A	ASNA0113-48ADL		. . WASHER used on 001A, 001B, 001C, 001D		002
300A	MS21042-3		. . NUT used on 001A, 001B, 001C, 001D		001
310A	NSA5575-7		. . CLAMP used on 001A, 001B, 001C, 001D		001
320A	NAS1149CN432R		. . WASHER used on 001A, 001B, 001C, 001D		008
330A	NAS1100-04-6		. . SCREW used on 001A, 001B, 001C, 001D		004

- ITEM NOT ILLUSTRATED

FIG. ITEM	PART NUMBER	AIRLINE STOCK NUMBER	NOMENCLATURE 1234567	EFF CODE	UNITS PER ASSY
340A	MS21042-04		. . NUT used on 001A, 001B, 001C, 001D		008
350A	A292901310-000		. . CABLE-CABIN ATTENDANT SEAT,AMI used on 001A, 001B, 001C, 001D		001
-360A	NSA938151PA2000		. . . CONTACT-PIN BUY PN EN3155-018M2018 used on 350A		026
-370A	NSA938152SA2000		. . . CONTACT-SOCKET BUY PN EN3155-019F2018 used on 350A		019
380A	E0052R14B19SNE		. . . CONNECTOR-PLUG used on 350A		001
390A	ABS0638B14		. . . BACKSHELL-CONNECTOR used on 350A		001
400A	ABS0364B26PC		. . . CONNECTOR-PLUG BUY PN ABS0364B26P used on 350A		001
-410A	ABS0364C		. . . BRACKET-CABLE used on 350A		001
-420A	ABS0364D		. . . CAP-PROTECTIVE used on 350A		001
430A	4056		. . INVERTER-MINI used on 001A, 001B, 001C, 001D		001
440A	NSA5527-03-01		. . SPACER used on 001A, 001B, 001C, 001D		004
450A	NAS1100-06-12		. . SCREW used on 001A, 001B, 001C, 001D		004

- ITEM NOT ILLUSTRATED

THIS PAGE IS INTENTIONALLY LEFT BLANK

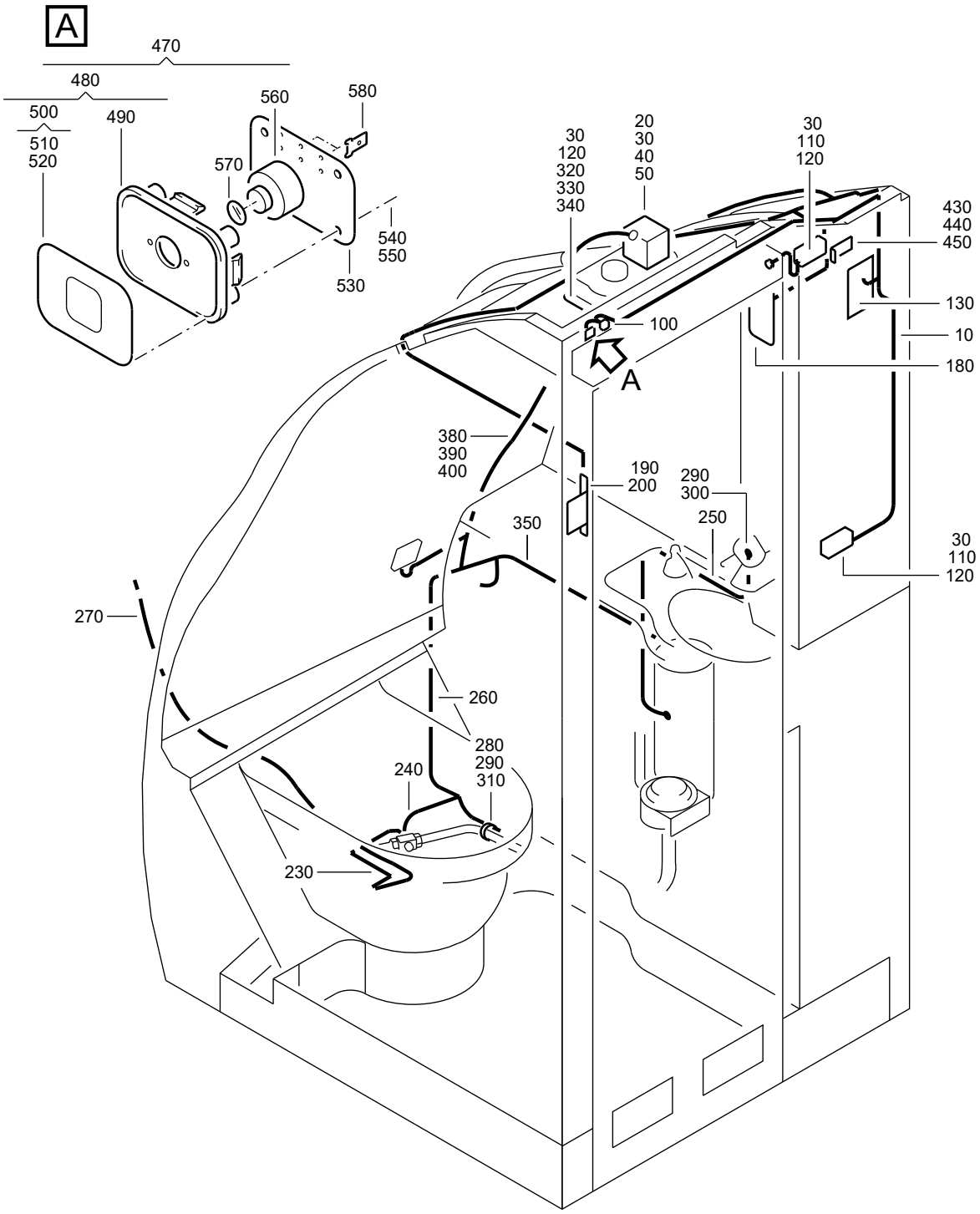

F_PL_254151_26_G_01_00

ELECTRICAL SYSTEM
Figure 26G/EN254151SHEET26G01

FIG. ITEM	PART NUMBER	AIRLINE STOCK NUMBER	NOMENCLATURE 1234567	EFF CODE	UNITS PER ASSY
26G					
-001A	D2549030602483		. ELECTRICAL SYSTEM NP used on 200D (25415141A), 200C (25415141D) SEE 25-41-51-41A FOR NHA SEE 25-41-51-41D FOR NHA		RF
010A	A292901303-000		. . HARNESS ASSY-CABLE used on 001A SEE 25-41-51-27B FOR DET		001
020A	PPA1201-00		. . DETECTOR-SMOKE used on 001A		001
030A	NAS1149CN832R		. . WASHER used on 001A		016
040A	NAS1100-08-8		. . SCREW used on 001A		004
050A	5L0064200100000		. . SEALING-SMOKE DETECTOR used on 001A		001
100A	10-1358-1		. . LIGHT-CALL used on 001A		001
110A	A292500300-200		. . BRACKET used on 001A		002
120A	NAS1096-2-7		. . SCREW BUY PN NAS1801-08-7 used on 001A		016
130A	F1101316-02		. . LIGHT ASSY used on 001A		001
-140A	F1000117-00		. . . LENS used on 130A		001

- ITEM NOT ILLUSTRATED

FIG. ITEM	PART NUMBER	AIRLINE STOCK NUMBER	NOMENCLATURE 1234567	EFF CODE	UNITS PER ASSY
-150A	F1000118-00		. . . HOUSING used on 130A		001
-160A	356		. . . LAMP-INCANDESCENT used on 130A		001
-170A	E0429-01		. . . LAMP BUY PN EN2240-7070 used on 130A		001
180A	4913211080		. . LOUDSPEAKER used on 001A		001
190A	A392500305-000		. . MICROSWITCH used on 001A		001
200A	NAS514P832-7		. . SCREW used on 001A		002
-210A	NSA935401-03		. . TIE-CABLE used on 001A		050
-220A	NSA935405-01		. . MOUNT used on 001A		025
230A	DCIN600-0510		. . STRAP-BONDING used on 001A		001
240A	DCIN600-0510		. . STRAP-BONDING used on 001A		001
250A	DCIN600-0510		. . STRAP-BONDING used on 001A		001
260A	DCIN600-1580		. . STRAP-BONDING used on 001A		001
270A	DCIN601-0620		. . STRAP-BONDING used on 001A		001

- ITEM NOT ILLUSTRATED

FIG. ITEM	PART NUMBER	AIRLINE STOCK NUMBER	NOMENCLATURE 1234567	EFF CODE	UNITS PER ASSY
280A	NAS1096-3-16		. . SCREW BUY PN NAS1801-3-16 used on 001A		001
290A	ASNA0113-48ADL		. . WASHER used on 001A		002
300A	MS21042-3		. . NUT used on 001A		001
310A	NSA5575-7		. . CLAMP used on 001A		001
320A	NAS1149CN432R		. . WASHER used on 001A		008
330A	NAS1100-04-6		. . SCREW used on 001A		004
340A	MS21042-04		. . NUT used on 001A		008
350A	A292901310-000		. . CABLE-CABIN ATTENDANT SEAT,AMI used on 001A		001
-360A	NSA938151PA2000		. . . CONTACT-PIN BUY PN EN3155-018M2018 used on 350A		026
-370A	NSA938152SA2000		. . . CONTACT-SOCKET BUY PN EN3155-019F2018 used on 350A		019
380A	E0052R14B19SNE		. . . CONNECTOR-PLUG used on 350A		001
390A	ABS0638B14		. . . BACKSHELL-CONNECTOR used on 350A		001

- ITEM NOT ILLUSTRATED

FIG. ITEM	PART NUMBER	AIRLINE STOCK NUMBER	NOMENCLATURE 1234567	EFF CODE	UNITS PER ASSY
400A	ABS0364B26PC		. . . CONNECTOR-PLUG BUY PN ABS0364B26P used on 350A		001
-410A	ABS0364C		. . . BRACKET-CABLE used on 350A		001
-420A	ABS0364D		. . . CAP-PROTECTIVE used on 350A		001
430A	4056		. . INVERTER-MINI used on 001A		001
440A	NSA5527-03-01		. . SPACER used on 001A		004
450A	NAS1100-06-12		. . SCREW used on 001A		004
470A	D9259036500200		. . PANEL-SWITCH,2065VU used on 001A		001
480A	D9259018203400		. . . HOUSING ASSY-SWITCH used on 470A		001
490A	D9259018400800		. . . . HOUSING-SWITCH used on 480A		001
500A	D9259024203400		. . . . FOIL ASSY used on 480A		001
510A	D9259024223400		. . . . . FOIL used on 500A		001
520A	D9259018220200		. . . . . FILM-ADHESIVE used on 500A		001
530A	D9259023820600		. . . PCB-PRINTED CIRCUIT BOARD used on 470A		001

- ITEM NOT ILLUSTRATED

FIG. ITEM	PART NUMBER	AIRLINE STOCK NUMBER	NOMENCLATURE 1234567	EFF CODE	UNITS PER ASSY
540A	NAS1100E04-5		. . . SCREW used on 470A		004
550A	DIN137A3B2C		. . . WASHER-SPRING BUY PN DIN137B3B2C used on 470A		004
560A	811215100		. . . SWITCH-BUTTON,SWITCH used on 470A		001
570A	800003511		. . . LENS-PROTECTIVE used on 470A		001
580A	726388-3		. . . PLUG used on 470A		002

- ITEM NOT ILLUSTRATED

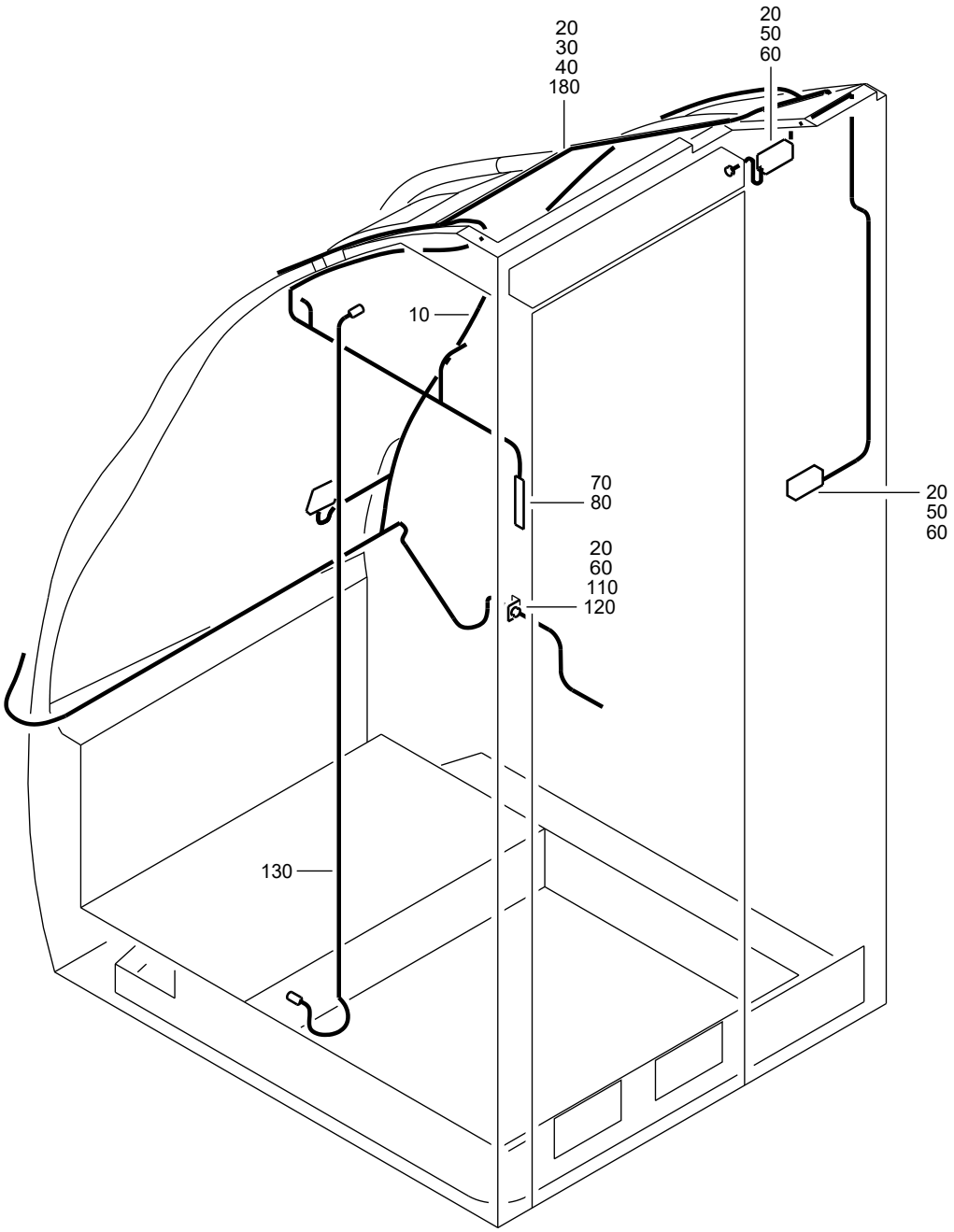

F_PL_254151_26_H_01_00

ELECTRICAL SYSTEM
Figure 26H/EN254151SHEET26H01

FIG. ITEM	PART NUMBER	AIRLINE STOCK NUMBER	NOMENCLATURE 1234567	EFF CODE	UNITS PER ASSY
26H					
-001A	D2549020712083		. ELECTRICAL SYSTEM NP used on 120A (25415141E) SEE 25-41-51-41E FOR NHA		RF
010A	A292901301-002		. . HARNESS ASSY-CABLE used on 001A SEE 25-41-51-27A FOR DET		001
020A	NAS1149CN832R		. . WASHER used on 001A		016
030A	NAS1100-08-10		. . SCREW used on 001A		004
040A	MS21042-06		. . NUT used on 001A		001
050A	A292500300-200		. . BRACKET used on 001A		002
060A	NAS1096-2-7		. . SCREW BUY PN NAS1801-08-7 used on 001A		016
070A	A392500305-000		. . MICROSWITCH used on 001A		001
080A	NAS514P832-7		. . SCREW used on 001A		002
-090A	NSA935401-03		. . TIE-CABLE used on 001A		050
-100A	NSA935405-01		. . MOUNT used on 001A		025
110A	NAS1149CN432R		. . WASHER used on 001A		008

- ITEM NOT ILLUSTRATED

FIG. ITEM	PART NUMBER	AIRLINE STOCK NUMBER	NOMENCLATURE 1234567	EFF CODE	UNITS PER ASSY
120A	MS21042-04		. . NUT used on 001A		008
130A	A292901310-000		. . CABLE-CABIN ATTENDANT SEAT,AMI used on 001A		001
180A	F1101316-02		. . LIGHT ASSY used on 001A		001

- ITEM NOT ILLUSTRATED

THIS PAGE IS INTENTIONALLY LEFT BLANK

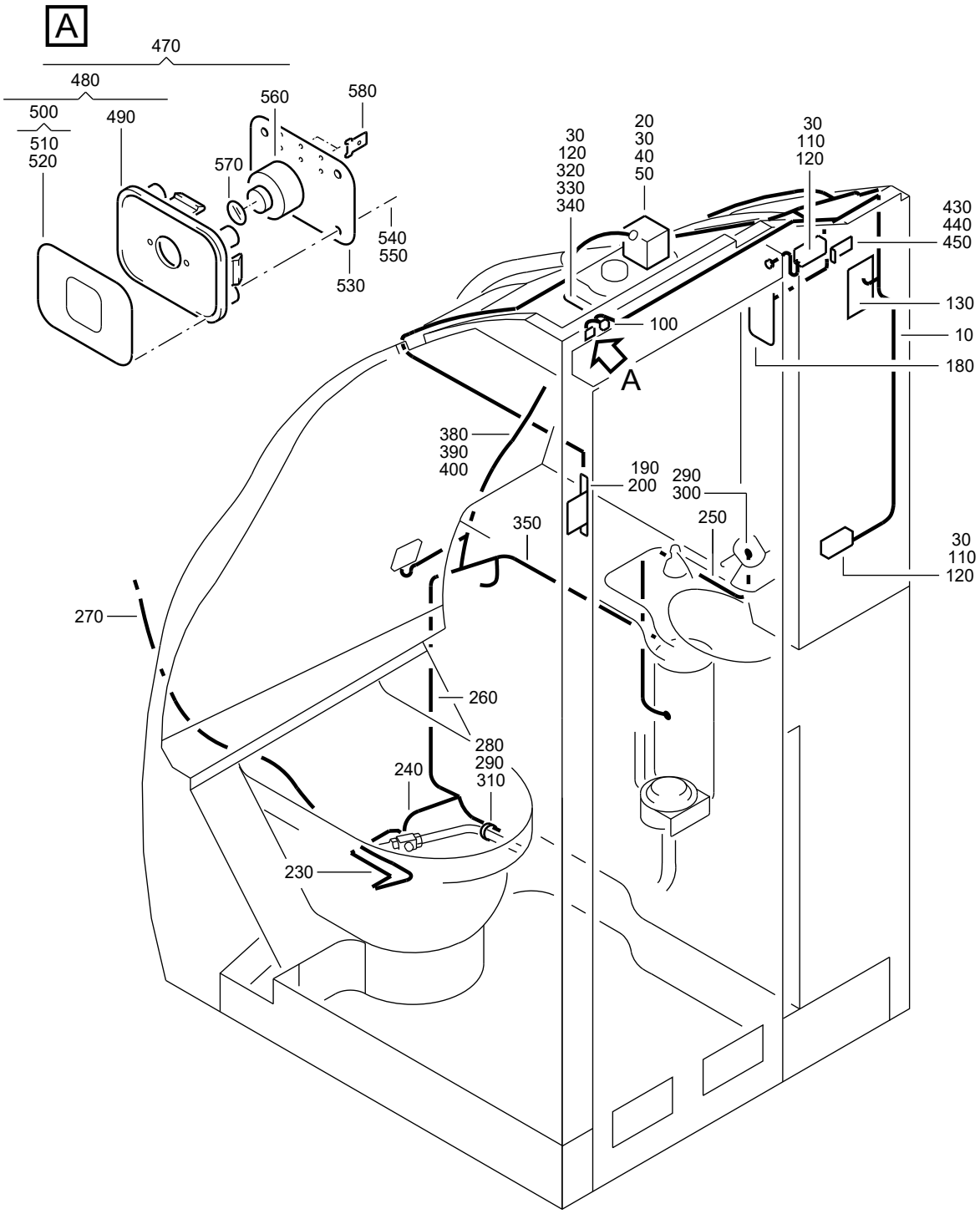

F_PL_254151_26_J_01_00

ELECTRICAL SYSTEM
Figure 26J/EN254151SHEET26J01

FIG. ITEM	PART NUMBER	AIRLINE STOCK NUMBER	NOMENCLATURE 1234567	EFF CODE	UNITS PER ASSY
26J					
-001A	D2549020713883		. ELECTRICAL SYSTEM NP used on 200E (25415141A) SEE 25-41-51-41A FOR NHA		RF
-001B	D2549030606483		. ELECTRICAL SYSTEM NP POST SB 26-1058 used on 200G (25415141A), 200C (25415141G) SEE 25-41-51-41A FOR NHA SEE 25-41-51-41G FOR NHA		RF
010A	A292901305-006		. . HARNESS ASSY-CABLE used on 001A, 001B SEE 25-41-51-27C FOR DET		001
020A	PPA1201-00		. . DETECTOR-SMOKE used on 001A		001
-020B	PPA1202-00		. . DETECTOR-SMOKE POST SB 26-1058 used on 001A, 001B		001
030A	NAS1149CN832R		. . WASHER used on 001A, 001B		016
040A	NAS1100-08-8		. . SCREW used on 001A, 001B		004
050A	5L0064200100000		. . SEALING-SMOKE DETECTOR used on 001A, 001B		001
100A	10-1358-1		. . LIGHT-CALL used on 001A, 001B		001
110A	A292500300-200		. . BRACKET used on 001A, 001B		002

- ITEM NOT ILLUSTRATED

FIG. ITEM	PART NUMBER	AIRLINE STOCK NUMBER	NOMENCLATURE 1234567	EFF CODE	UNITS PER ASSY
120A	NAS1096-2-7		. . SCREW BUY PN NAS1801-08-7 used on 001A, 001B		016
130A	F1101316-02		. . LIGHT ASSY used on 001A, 001B		001
-140A	F1000117-00		. . . LENS used on 130A		001
-150A	F1000118-00		. . . HOUSING used on 130A		001
-160A	356		. . . LAMP-INCANDESCENT used on 130A		001
-170A	E0429-01		. . . LAMP BUY PN EN2240-7070 used on 130A		001
180A	4913211080		. . LOUDSPEAKER used on 001A, 001B		001
190A	A392500305-000		. . MICROSWITCH used on 001A, 001B		001
200A	NAS514P832-7		. . SCREW used on 001A, 001B		002
-210A	NSA935401-03		. . TIE-CABLE used on 001A, 001B		050
-220A	NSA935405-01		. . MOUNT used on 001A, 001B		025
230A	DCIN600-0510		. . STRAP-BONDING used on 001A, 001B		001
240A	DCIN600-0510		. . STRAP-BONDING used on 001A, 001B		001

- ITEM NOT ILLUSTRATED

FIG. ITEM	PART NUMBER	AIRLINE STOCK NUMBER	NOMENCLATURE 1234567	EFF CODE	UNITS PER ASSY
250A	DCIN600-0510		. . STRAP-BONDING used on 001A, 001B		001
260A	DCIN600-1580		. . STRAP-BONDING used on 001A, 001B		001
270A	DCIN601-0620		. . STRAP-BONDING used on 001A, 001B		001
280A	NAS1096-3-16		. . SCREW BUY PN NAS1801-3-16 used on 001A, 001B		001
290A	ASNA0113-48ADL		. . WASHER used on 001A, 001B		002
300A	MS21042-3		. . NUT used on 001A, 001B		001
310A	NSA5575-7		. . CLAMP used on 001A, 001B		001
320A	NAS1149CN432R		. . WASHER used on 001A, 001B		008
330A	NAS1100-04-6		. . SCREW used on 001A, 001B		004
340A	MS21042-04		. . NUT used on 001A, 001B		008
350A	A292901310-000		. . CABLE-CABIN ATTENDANT SEAT,AMI used on 001A, 001B		001
-360A	NSA938151PA2000		. . . CONTACT-PIN BUY PN EN3155-018M2018 used on 350A		026

- ITEM NOT ILLUSTRATED

FIG. ITEM	PART NUMBER	AIRLINE STOCK NUMBER	NOMENCLATURE 1234567	EFF CODE	UNITS PER ASSY
-370A	NSA938152SA2000		. . . CONTACT-SOCKET BUY PN EN3155-019F2018 used on 350A		019
380A	E0052R14B19SNE		. . . CONNECTOR-PLUG used on 350A		001
390A	ABS0638B14		. . . BACKSHELL-CONNECTOR used on 350A		001
400A	ABS0364B26PC		. . . CONNECTOR-PLUG BUY PN ABS0364B26P used on 350A		001
-410A	ABS0364C		. . . BRACKET-CABLE used on 350A		001
-420A	ABS0364D		. . . CAP-PROTECTIVE used on 350A		001
430A	4056		. . INVERTER-MINI used on 001A, 001B		001
440A	NSA5527-03-01		. . SPACER used on 001A, 001B		004
450A	NAS1100-06-12		. . SCREW used on 001A, 001B		004
470A	D9259036500200		. . PANEL-SWITCH,2065VU used on 001A, 001B		001
480A	D9259018203400		. . . HOUSING ASSY-SWITCH used on 470A		001
490A	D9259018400800		. . . . HOUSING-SWITCH used on 480A		001
500A	D9259024203400		. . . . FOIL ASSY used on 480A		001

- ITEM NOT ILLUSTRATED

FIG. ITEM	PART NUMBER	AIRLINE STOCK NUMBER	NOMENCLATURE 1234567	EFF CODE	UNITS PER ASSY
510A	D9259024223400		. . . . . FOIL used on 500A		001
520A	D9259018220200		. . . . . FILM-ADHESIVE used on 500A		001
530A	D9259023820600		. . . PCB-PRINTED CIRCUIT BOARD used on 470A		001
540A	NAS1100E04-5		. . . SCREW used on 470A		004
550A	DIN137A3B2C		. . . WASHER-SPRING BUY PN DIN137B3B2C used on 470A		004
560A	811215100		. . . SWITCH-BUTTON,SWITCH used on 470A		001
570A	800003511		. . . LENS-PROTECTIVE used on 470A		001
580A	726388-3		. . . PLUG used on 470A		002

- ITEM NOT ILLUSTRATED

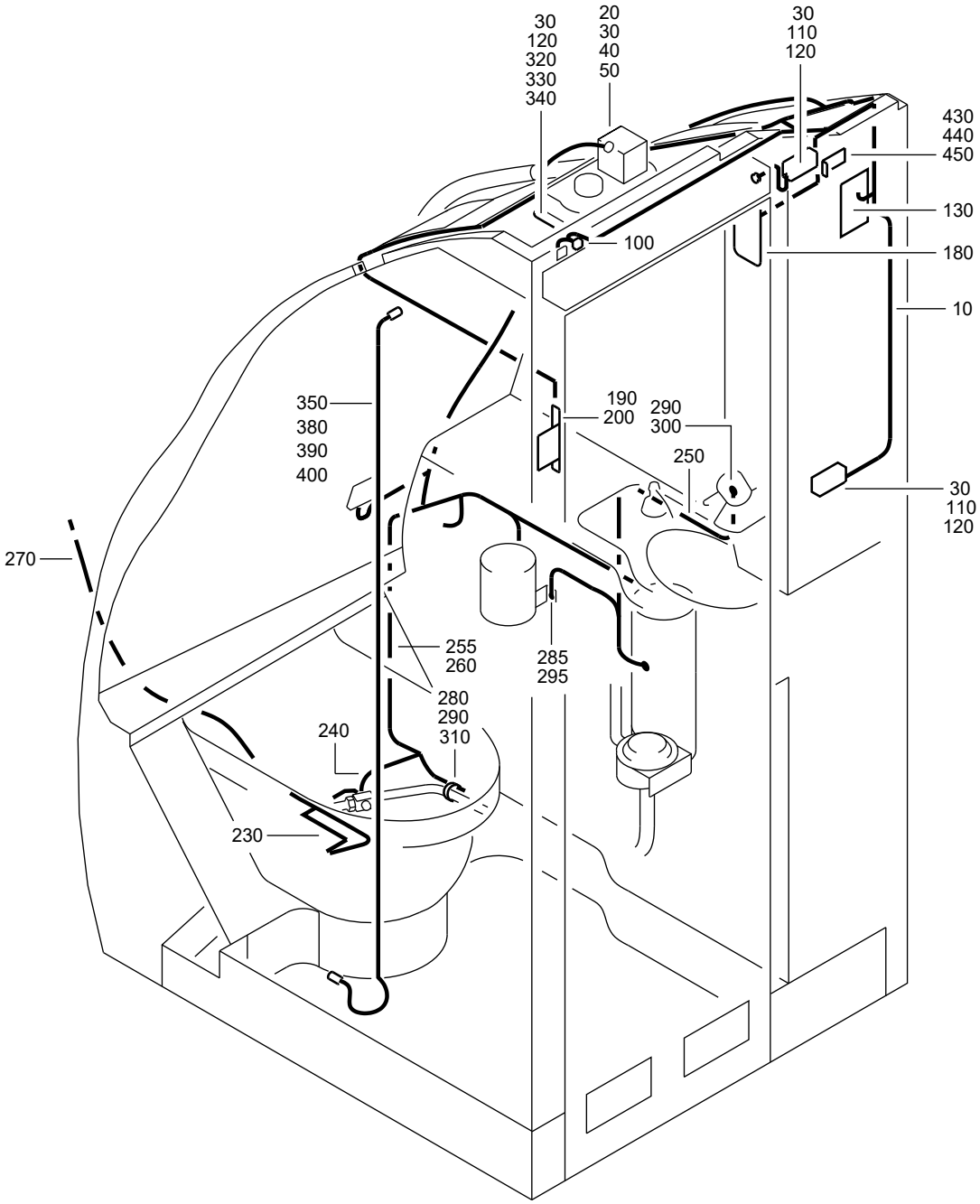

F_PL_254151_26_K_01_00

ELECTRICAL SYSTEM
Figure 26K/EN254151SHEET26K01

FIG. ITEM	PART NUMBER	AIRLINE STOCK NUMBER	NOMENCLATURE 1234567		EFF CODE	UNITS PER ASSY
26K						
-001A	D2549020710683		. ELECTRICAL SYSTEM PRE VSB A2-254-25-130 used on 200C (25415141C), 200B (25415141F), 200A (25415141G), 200A (25415141H), 200A (25415141J), 200A(25415141K), 200A (25415141L), 200A (25415141M), 200B(25415141S) SEE 25-41-51-41C FOR NHA SEE 25-41-51-41F FOR NHA SEE 25-41-51-41G FOR NHA SEE 25-41-51-41H FOR NHA SEE 25-41-51-41J FOR NHA SEE 25-41-51-41K FOR NHA SEE 25-41-51-41L FOR NHA SEE 25-41-51-41M FOR NHA SEE 25-41-51-41S FOR NHA	NP		RF
-001B	D2549020508283		. ELECTRICAL SYSTEM POST SB 26-1058 used on 200E (25415141G), 200D (25415141J), 200D (25415141K), 200G (25415141M) SEE 25-41-51-41G FOR NHA SEE 25-41-51-41J FOR NHA SEE 25-41-51-41K FOR NHA SEE 25-41-51-41M FOR NHA	NP		RF
-001C	D2549030607483		. ELECTRICAL SYSTEM used on 200D (25415141G), 200C (25415141H) SEE 25-41-51-41G FOR NHA SEE 25-41-51-41H FOR NHA	NP		RF

- ITEM NOT ILLUSTRATED

FIG. ITEM	PART NUMBER	AIRLINE STOCK NUMBER	NOMENCLATURE 1234567		EFF CODE	UNITS PER ASSY
-001D	D2549020509683		. ELECTRICAL SYSTEM used on 200B (25415141G), 200B (25415141J), 200B (25415141K) SEE 25-41-51-41G FOR NHA SEE 25-41-51-41J FOR NHA SEE 25-41-51-41K FOR NHA	NP		RF
-001E	D2549010606483		. ELECTRICAL SYSTEM used on 200B (25415141H) SEE 25-41-51-41H FOR NHA	NP		RF
-001F	D2549020512883		. ELECTRICAL SYSTEM used on 200A (25415141R) SEE 25-41-51-41R FOR NHA	NP		RF
-001G	D2549030402083		. ELECTRICAL SYSTEM used on 200C (25415141N), 200C (25415141T), 200C (25415141W), 200B (25415141X) SEE 25-41-51-41N FOR NHA SEE 25-41-51-41T FOR NHA SEE 25-41-51-41W FOR NHA SEE 25-41-51-41X FOR NHA	NP		RF
-001H	R22540119604883		. ELECTRICAL SYSTEM POST VSB A2-254-25-130 used on 200E (25415141K) SEE 25-41-51-41K FOR NHA	NP		RF
010A	A292901305-000		. . HARNESS ASSY-CABLE used on 001A, 001B, 001C, 001F, 001G, 001H SEE 25-41-51-27C FOR DET			001
-010B	A292901305-008		. . HARNESS ASSY-CABLE used on 001D SEE 25-41-51-27C FOR DET			001

- ITEM NOT ILLUSTRATED

FIG. ITEM	PART NUMBER	AIRLINE STOCK NUMBER	NOMENCLATURE 1234567	EFF CODE	UNITS PER ASSY
-010C	A292901305-006		. . HARNESS ASSY-CABLE used on 001E SEE 25-41-51-27C FOR DET		001
020A	PPA1201-00		. . DETECTOR-SMOKE used on 001A, 001C, 001E, 001F, 001H		001
-020B	PPA1202-00		. . DETECTOR-SMOKE POST SB 26-1058 used on 001A, 001B, 001C, 001D, 001E, 001F, 001G, 001H		001
030A	NAS1149CN832R		. . WASHER used on 001A, 001B, 001C, 001D, 001E, 001F, 001G, 001H		016
040A	NAS1100-08-8		. . SCREW used on 001A, 001B, 001C, 001D, 001E, 001F, 001G, 001H		004
050A	5L0064200100000		. . SEALING-SMOKE DETECTOR used on 001A, 001B, 001C, 001D, 001E, 001F, 001G, 001H		001
100A	10-1358-1		. . LIGHT-CALL used on 001A, 001B, 001C, 001D, 001E, 001F, 001G, 001H		001
110A	A292500300-200		. . BRACKET used on 001A, 001B, 001C, 001D, 001E, 001F, 001G, 001H		002
120A	NAS1096-2-7		. . SCREW BUY PN NAS1801-08-7 used on 001A, 001B, 001C, 001D, 001E, 001F, 001G, 001H		016

- ITEM NOT ILLUSTRATED

FIG. ITEM	PART NUMBER	AIRLINE STOCK NUMBER	NOMENCLATURE 1234567	EFF CODE	UNITS PER ASSY
130A	F1101316-02		. . LIGHT ASSY used on 001A, 001B, 001C, 001D, 001E, 001H		001
-130B	F1000270-00		. . LIGHT ASSY used on 001F, 001G		001
-140A	F1000117-00		. . . LENS used on 130A		001
-150A	F1000118-00		. . . HOUSING used on 130A		001
-160A	356		. . . LAMP-INCANDESCENT used on 130A		001
-170A	E0429-01		. . . LAMP BUY PN EN2240-7070 used on 130A		001
180A	4913211080		. . LOUDSPEAKER used on 001A, 001B, 001C, 001D, 001E, 001F, 001G, 001H		001
190A	A392500305-000		. . MICROSWITCH used on 001A, 001B, 001C, 001D, 001E, 001F, 001G, 001H		001
200A	NAS514P832-7		. . SCREW used on 001A, 001B, 001C, 001D, 001E, 001F, 001G, 001H		002
-210A	NSA935401-03		. . TIE-CABLE used on 001A, 001B, 001C, 001D, 001E, 001F, 001G, 001H		050
-220A	NSA935405-01		. . MOUNT used on 001A, 001B, 001C, 001D, 001E, 001F, 001G, 001H		025

- ITEM NOT ILLUSTRATED

FIG. ITEM	PART NUMBER	AIRLINE STOCK NUMBER	NOMENCLATURE 1234567	EFF CODE	UNITS PER ASSY
230A	DCIN600-0510		. . STRAP-BONDING used on 001A, 001B, 001C, 001D, 001E, 001F, 001G, 001H		001
240A	DCIN600-0510		. . STRAP-BONDING used on 001A, 001B, 001C, 001D, 001E, 001F, 001G, 001H		001
250A	DCIN600-0510		. . STRAP-BONDING used on 001A, 001B, 001C, 001D, 001E, 001F, 001G, 001H		001
-253A	DCIN600-0280		. . STRAP-BONDING POST VSB A2-254-25-130 used on 001H		001
255A	DCIN600-0510		. . STRAP-BONDING used on 001C		001
260A	DCIN600-1580		. . STRAP-BONDING used on 001A, 001B, 001C, 001D, 001E, 001F, 001G, 001H		001
270A	DCIN601-0620		. . STRAP-BONDING used on 001A, 001B, 001C, 001D, 001E, 001F, 001G, 001H		001
280A	NAS1096-3-16		. . SCREW BUY PN NAS1801-3-16 used on 001A, 001B, 001C, 001D, 001E, 001F, 001G, 001H		001
285A	NAS1096-2-16		. . SCREW BUY PN NAS1801-08-16 used on 001C		001
290A	ASNA0113-48ADL		. . WASHER used on 001A, 001B, 001C, 001D, 001E, 001F, 001G, 001H		002

- ITEM NOT ILLUSTRATED

FIG. ITEM	PART NUMBER	AIRLINE STOCK NUMBER	NOMENCLATURE 1234567	EFF CODE	UNITS PER ASSY
-292A	ASNA0113-40ADL		. . WASHER POST VSB A2-254-25-130 used on 001H		001
295A	ASNA0113-48ADL		. . WASHER used on 001C		001
300A	MS21042-3		. . NUT used on 001A, 001B, 001C, 001D, 001E, 001F, 001G, 001H		001
-305A	MS21042-08		. . NUT POST VSB A2-254-25-130 used on 001H		001
310A	NSA5575-7		. . CLAMP used on 001A, 001B, 001C, 001D, 001E, 001F, 001G, 001H		001
320A	NAS1149CN432R		. . WASHER used on 001A, 001B, 001C, 001D, 001E, 001F, 001G, 001H		008
330A	NAS1100-04-6		. . SCREW used on 001A, 001B, 001C, 001D, 001E, 001F, 001G, 001H		004
340A	MS21042-04		. . NUT used on 001A, 001B, 001C, 001D, 001E, 001F, 001G, 001H		008
350A	A292901310-000		. . CABLE-CABIN ATTENDANT SEAT,AMI used on 001A, 001B, 001C, 001D, 001E, 001F, 001G, 001H		001
-360A	NSA938151PA2000		. . . CONTACT-PIN BUY PN EN3155-018M2018 used on 350A		026

- ITEM NOT ILLUSTRATED

FIG. ITEM	PART NUMBER	AIRLINE STOCK NUMBER	NOMENCLATURE 1234567	EFF CODE	UNITS PER ASSY
-370A	NSA938152SA2000		. . . CONTACT-SOCKET BUY PN EN3155-019F2018 used on 350A		019
380A	E0052R14B19SNE		. . . CONNECTOR-PLUG used on 350A		001
390A	ABS0638B14		. . . BACKSHELL-CONNECTOR used on 350A		001
400A	ABS0364B26PC		. . . CONNECTOR-PLUG BUY PN ABS0364B26P used on 350A		001
-410A	ABS0364C		. . . BRACKET-CABLE used on 350A		001
-420A	ABS0364D		. . . CAP-PROTECTIVE used on 350A		001
430A	4056		. . INVERTER-MINI used on 001A, 001B, 001C, 001D, 001E, 001F, 001G, 001H		001
440A	NSA5527-03-01		. . SPACER used on 001A, 001B, 001C, 001D, 001E, 001F, 001G, 001H		004
450A	NAS1100-06-12		. . SCREW used on 001A, 001B, 001C, 001D, 001E, 001F, 001G, 001H		004

- ITEM NOT ILLUSTRATED

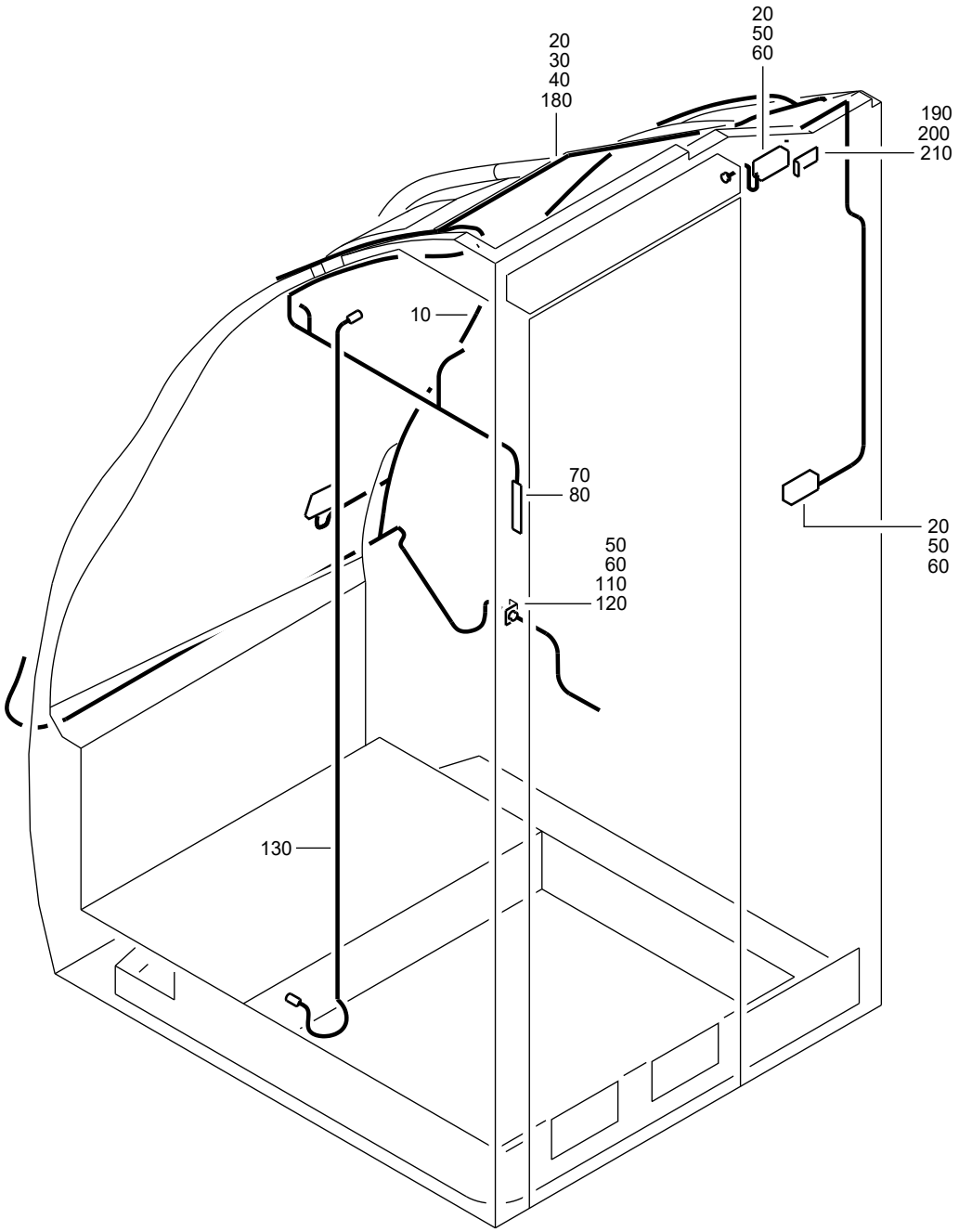

F_PL_254151_26_L_01_00

ELECTRICAL SYSTEM
Figure 26L/EN254151SHEET26L01

FIG. ITEM	PART NUMBER	AIRLINE STOCK NUMBER	NOMENCLATURE 1234567	EFF CODE	UNITS PER ASSY
26L					
-001A	D2549020712683		. ELECTRICAL SYSTEM NP used on 120B (25415141E) SEE 25-41-51-41E FOR NHA		RF
010A	A292901303-002		. . HARNESS ASSY-CABLE used on 001A SEE 25-41-51-27B FOR DET		001
020A	NAS1149CN832R		. . WASHER used on 001A		016
030A	NAS1100-08-10		. . SCREW used on 001A		004
040A	MS21042-06		. . NUT used on 001A		001
050A	A292500300-200		. . BRACKET used on 001A		002
060A	NAS1096-2-7		. . SCREW BUY PN NAS1801-08-7 used on 001A		016
070A	A392500305-000		. . MICROSWITCH used on 001A		001
080A	NAS514P832-7		. . SCREW used on 001A		002
-090A	NSA935401-03		. . TIE-CABLE used on 001A		050
-100A	NSA935405-01		. . MOUNT used on 001A		025
110A	NAS1149CN432R		. . WASHER used on 001A		008

- ITEM NOT ILLUSTRATED

FIG. ITEM	PART NUMBER	AIRLINE STOCK NUMBER	NOMENCLATURE 1234567	EFF CODE	UNITS PER ASSY
120A	MS21042-04		. . NUT used on 001A		008
130A	A292901310-000		. . CABLE-CABIN ATTENDANT SEAT,AMI used on 001A		001
180A	F1101316-02		. . LIGHT ASSY used on 001A		001
190A	4056		. . INVERTER-MINI used on 001A		001
200A	NSA5527-03-01		. . SPACER used on 001A		004
210A	NAS1100-06-12		. . SCREW used on 001A		004

- ITEM NOT ILLUSTRATED

THIS PAGE IS INTENTIONALLY LEFT BLANK

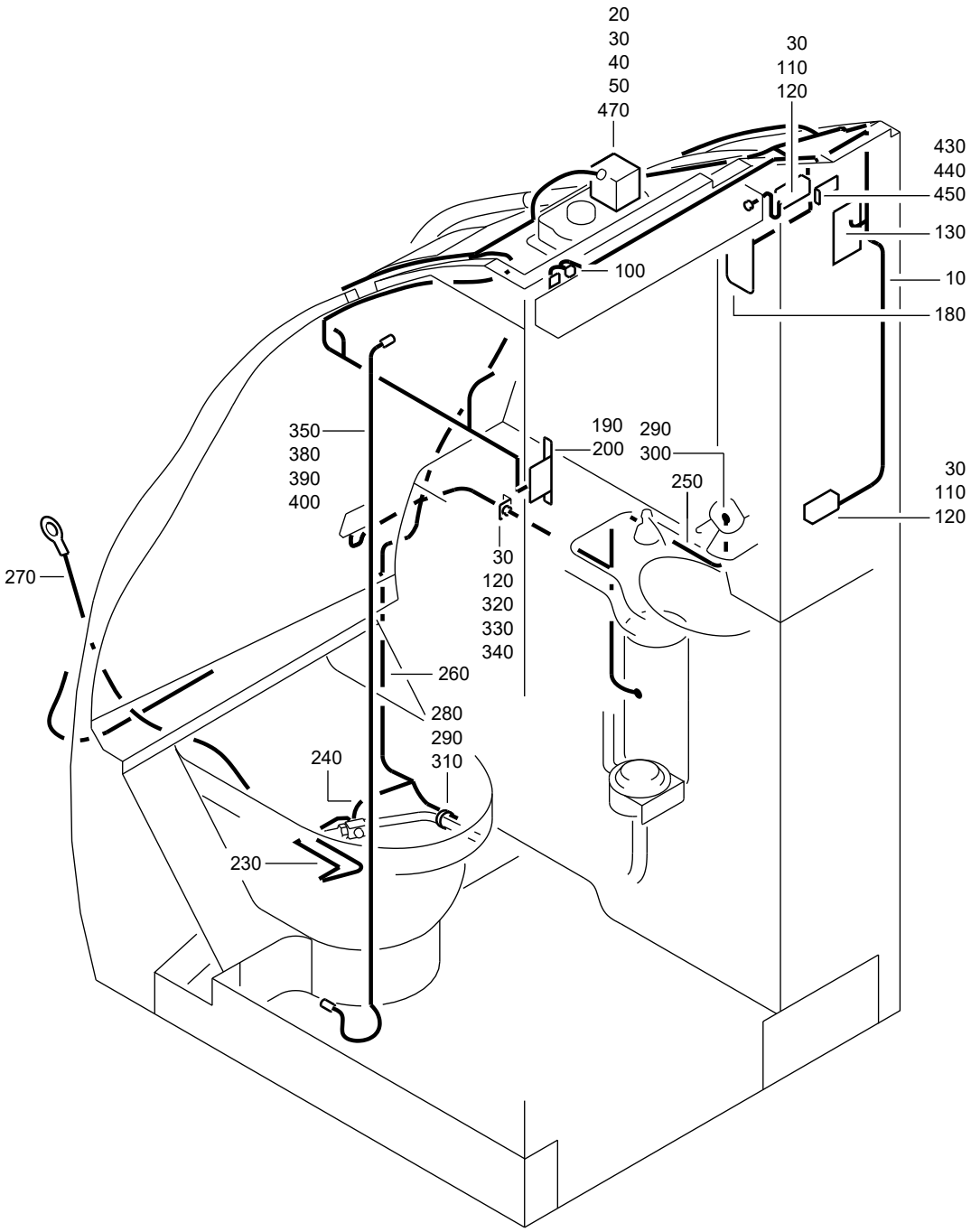

F_PL_254151_26_M_01_01

ELECTRICAL SYSTEM
Figure 26M/EN254151SHEET26M01

FIG. ITEM	PART NUMBER	AIRLINE STOCK NUMBER	NOMENCLATURE 1234567	EFF CODE	UNITS PER ASSY
26M -001A	D2549020513083		. ELECTRICAL SYSTEM NP PRE VSB A2-254-25-130 used on 200C (25415141J), 200C (25415141K), 200B(25415141L), 200E (25415141M), 200A (25415141N), 200B(25415141P), 210A (25415141Q), 200C (25415141R), 200A(25415141S), 200A (25415141T), 200A (25415141U), 200A(25415141V), 200B (25415141W), 200A (25415141X), 200A(25415141Y), 200A (25415141Z), 200B (254151420), 200A(25415142A), 200A (25415142B), 200A (25415142C), 200D(25415142D), 200A (25415142E) SEE 25-41-51-41J FOR NHA SEE 25-41-51-41K FOR NHA SEE 25-41-51-41L FOR NHA SEE 25-41-51-41M FOR NHA SEE 25-41-51-41N FOR NHA SEE 25-41-51-41P FOR NHA SEE 25-41-51-41Q FOR NHA SEE 25-41-51-41R FOR NHA SEE 25-41-51-41S FOR NHA SEE 25-41-51-41T FOR NHA SEE 25-41-51-41U FOR NHA SEE 25-41-51-41V FOR NHA SEE 25-41-51-41W FOR NHA SEE 25-41-51-41X FOR NHA SEE 25-41-51-41Y FOR NHA SEE 25-41-51-41Z FOR NHA SEE 25-41-51-420 FOR NHA SEE 25-41-51-42A FOR NHA SEE 25-41-51-42B FOR NHA SEE 25-41-51-42C FOR NHA SEE 25-41-51-42D FOR NHA SEE 25-41-51-42E FOR NHA		RF

- ITEM NOT ILLUSTRATED

FIG. ITEM	PART NUMBER	AIRLINE STOCK NUMBER	NOMENCLATURE 1234567		EFF CODE	UNITS PER ASSY
-001B	D2549010607883		. ELECTRICAL SYSTEM used on 200B (25415141M), 200B (25415141N) SEE 25-41-51-41M FOR NHA SEE 25-41-51-41N FOR NHA	NP		RF
-001C	D2549030611683		. ELECTRICAL SYSTEM used on 200C (25415141M), 200B (25415141R), 200B (25415141T) SEE 25-41-51-41M FOR NHA SEE 25-41-51-41R FOR NHA SEE 25-41-51-41T FOR NHA	NP		RF
-001D	D2549030611483		. ELECTRICAL SYSTEM used on 200D (25415141M), 200D (25415141W) SEE 25-41-51-41M FOR NHA SEE 25-41-51-41W FOR NHA	NP		RF
-001E	D2549010607283		. ELECTRICAL SYSTEM POST SB 26-1058 used on 200E (25415141J), 200F (25415141M), 200D(25415141R), 200C (25415141V), 200E (25415141X), 200E(25415141Y), 200C (25415141Z), 200D (25415142C) SEE 25-41-51-41J FOR NHA SEE 25-41-51-41M FOR NHA SEE 25-41-51-41R FOR NHA SEE 25-41-51-41V FOR NHA SEE 25-41-51-41X FOR NHA SEE 25-41-51-41Y FOR NHA SEE 25-41-51-41Z FOR NHA SEE 25-41-51-42C FOR NHA	NP		RF
-001F	D2549020810083		. ELECTRICAL SYSTEM used on 200C (25415141Y) SEE 25-41-51-41Y FOR NHA	NP		RF

- ITEM NOT ILLUSTRATED

FIG. ITEM	PART NUMBER	AIRLINE STOCK NUMBER	NOMENCLATURE 1234567	EFF CODE	UNITS PER ASSY
-001G	D2549020812283		. ELECTRICAL SYSTEM NP used on 200E (25415142A), 200C (25415142B) SEE 25-41-51-42A FOR NHA SEE 25-41-51-42B FOR NHA		RF
-001H	R22540119605083		. ELECTRICAL SYSTEM NP POST VSB A2-254-25-130 used on 200D (25415141N), 200E (25415141R) SEE 25-41-51-41N FOR NHA SEE 25-41-51-41R FOR NHA		RF
010A	A292901305-000		. . HARNESS ASSY-CABLE used on 001A, 001E, 001H SEE 25-41-51-27C FOR DET		001
-010B	A292901305-006		. . HARNESS ASSY-CABLE used on 001B SEE 25-41-51-27C FOR DET		001
-010C	A292901305-008		. . HARNESS ASSY-CABLE used on 001C, 001G SEE 25-41-51-27C FOR DET		001
-010D	A292901305-012		. . HARNESS ASSY-CABLE used on 001D SEE 25-41-51-27C FOR DET		001
-010E	A292901305-010		. . HARNESS ASSY-CABLE used on 001F SEE 25-41-51-27C FOR DET		001
020A	PPA1201-00		. . DETECTOR-SMOKE used on 001A, 001B, 001D, 001H		001
-020B	PPA1202-00		. . DETECTOR-SMOKE POST SB 26-1058 used on 001A, 001B, 001C, 001D, 001E, 001F, 001G, 001H		001

- ITEM NOT ILLUSTRATED

FIG. ITEM	PART NUMBER	AIRLINE STOCK NUMBER	NOMENCLATURE 1234567	EFF CODE	UNITS PER ASSY
030A	NAS1149CN832R		. . WASHER used on 001A, 001B, 001C, 001D, 001E, 001F, 001G, 001H		016
040A	NAS1100-08-8		. . SCREW used on 001A, 001B, 001C, 001D, 001E, 001F, 001G, 001H		004
050A	5L0064200100000		. . SEALING-SMOKE DETECTOR used on 001A, 001B, 001C, 001D, 001E, 001F, 001G, 001H		001
100A	F1000240-01		. . LIGHT-CALL used on 001A, 001B, 001C, 001D, 001E, 001F, 001G, 001H		001
110A	A292500300-200		. . BRACKET used on 001A, 001B, 001C, 001D, 001E, 001F, 001G, 001H		002
120A	NAS1096-2-7		. . SCREW BUY PN NAS1801-08-7 used on 001A, 001B, 001C, 001D, 001E, 001F, 001G, 001H		016
130A	F1000270-00		. . LIGHT ASSY used on 001A, 001B, 001C, 001D, 001E, 001F, 001G, 001H		001
180A	4913211080		. . LOUDSPEAKER used on 001A, 001B, 001C, 001D, 001E, 001F, 001G, 001H		001
190A	A392500305-000		. . MICROSWITCH used on 001A, 001B, 001C, 001D, 001E, 001F, 001G, 001H		001

- ITEM NOT ILLUSTRATED

FIG. ITEM	PART NUMBER	AIRLINE STOCK NUMBER	NOMENCLATURE 1234567	EFF CODE	UNITS PER ASSY
200A	NAS514P832-7		. . SCREW used on 001A, 001B, 001C, 001D, 001E, 001F, 001G, 001H		002
-210A	NSA935401-03		. . TIE-CABLE used on 001A, 001B, 001C, 001D, 001E, 001F, 001G, 001H		050
-220A	NSA935405-01		. . MOUNT used on 001A, 001B, 001C, 001D, 001E, 001F, 001G, 001H		025
230A	DCIN600-0510		. . STRAP-BONDING used on 001A, 001B, 001C, 001D, 001E, 001F, 001G, 001H		001
240A	DCIN600-0510		. . STRAP-BONDING used on 001A, 001B, 001C, 001D, 001E, 001F, 001G, 001H		001
250A	DCIN600-0510		. . STRAP-BONDING used on 001A, 001B, 001C, 001D, 001E, 001F, 001G, 001H		001
-255A	DCIN600-0280		. . STRAP-BONDING POST VSB A2-254-25-130 used on 001H		001
260A	DCIN600-1580		. . STRAP-BONDING used on 001A, 001B, 001C, 001D, 001E, 001F, 001G, 001H		001
270A	DCIN601-0620		. . STRAP-BONDING used on 001A, 001B, 001C, 001D, 001E, 001F, 001G, 001H		001
280A	NAS1096-3-16		. . SCREW BUY PN NAS1801-3-16 used on 001A, 001B, 001C, 001D, 001E, 001F, 001G, 001H		001

- ITEM NOT ILLUSTRATED

FIG. ITEM	PART NUMBER	AIRLINE STOCK NUMBER	NOMENCLATURE 1234567	EFF CODE	UNITS PER ASSY
290A	ASNA0113-48ADL		. . WASHER used on 001A, 001B, 001C, 001D, 001E, 001F, 001G, 001H		002
-295A	ASNA0113-40ADL		. . WASHER POST VSB A2-254-25-130 used on 001H		001
300A	MS21042-3		. . NUT used on 001A, 001B, 001C, 001D, 001E, 001F, 001G, 001H		001
-305A	MS21042-08		. . NUT POST VSB A2-254-25-130 used on 001H		001
310A	NSA5575-7		. . CLAMP used on 001A, 001B, 001C, 001D, 001E, 001F, 001G, 001H		001
320A	NAS1149CN432R		. . WASHER used on 001A, 001B, 001C, 001D, 001E, 001F, 001G, 001H		008
330A	NAS1100-04-6		. . SCREW used on 001A, 001B, 001C, 001D, 001E, 001F, 001G, 001H		004
340A	MS21042-04		. . NUT used on 001A, 001B, 001C, 001D, 001E, 001F, 001G, 001H		008
350A	A292901310-000		. . CABLE-CABIN ATTENDANT SEAT,AMI used on 001A, 001B, 001C, 001D, 001E, 001F, 001G, 001H		001
-360A	NSA938151PA2000		. . . CONTACT-PIN BUY PN EN3155-018M2018 used on 350A		026

- ITEM NOT ILLUSTRATED

FIG. ITEM	PART NUMBER	AIRLINE STOCK NUMBER	NOMENCLATURE 1234567	EFF CODE	UNITS PER ASSY
-370A	NSA938152SA2000		. . . CONTACT-SOCKET BUY PN EN3155-019F2018 used on 350A		019
380A	E0052R14B19SNE		. . . CONNECTOR-PLUG used on 350A		001
390A	ABS0638B14		. . . BACKSHELL-CONNECTOR used on 350A		001
400A	ABS0364B26PC		. . . CONNECTOR-PLUG BUY PN ABS0364B26P used on 350A		001
-410A	ABS0364C		. . . BRACKET-CABLE used on 350A		001
-420A	ABS0364D		. . . CAP-PROTECTIVE used on 350A		001
430A	4056		. . INVERTER-MINI used on 001A, 001B, 001C, 001E, 001F, 001G, 001H		001
440A	NSA5527-03-01		. . SPACER used on 001A, 001B, 001C, 001E, 001F, 001G, 001H		004
450A	NAS1100-06-12		. . SCREW used on 001A, 001B, 001C, 001E, 001F, 001G, 001H		004
470A	MS21042-08		. . NUT used on 001A, 001B, 001C, 001D, 001E, 001F, 001G, 001H		004

- ITEM NOT ILLUSTRATED

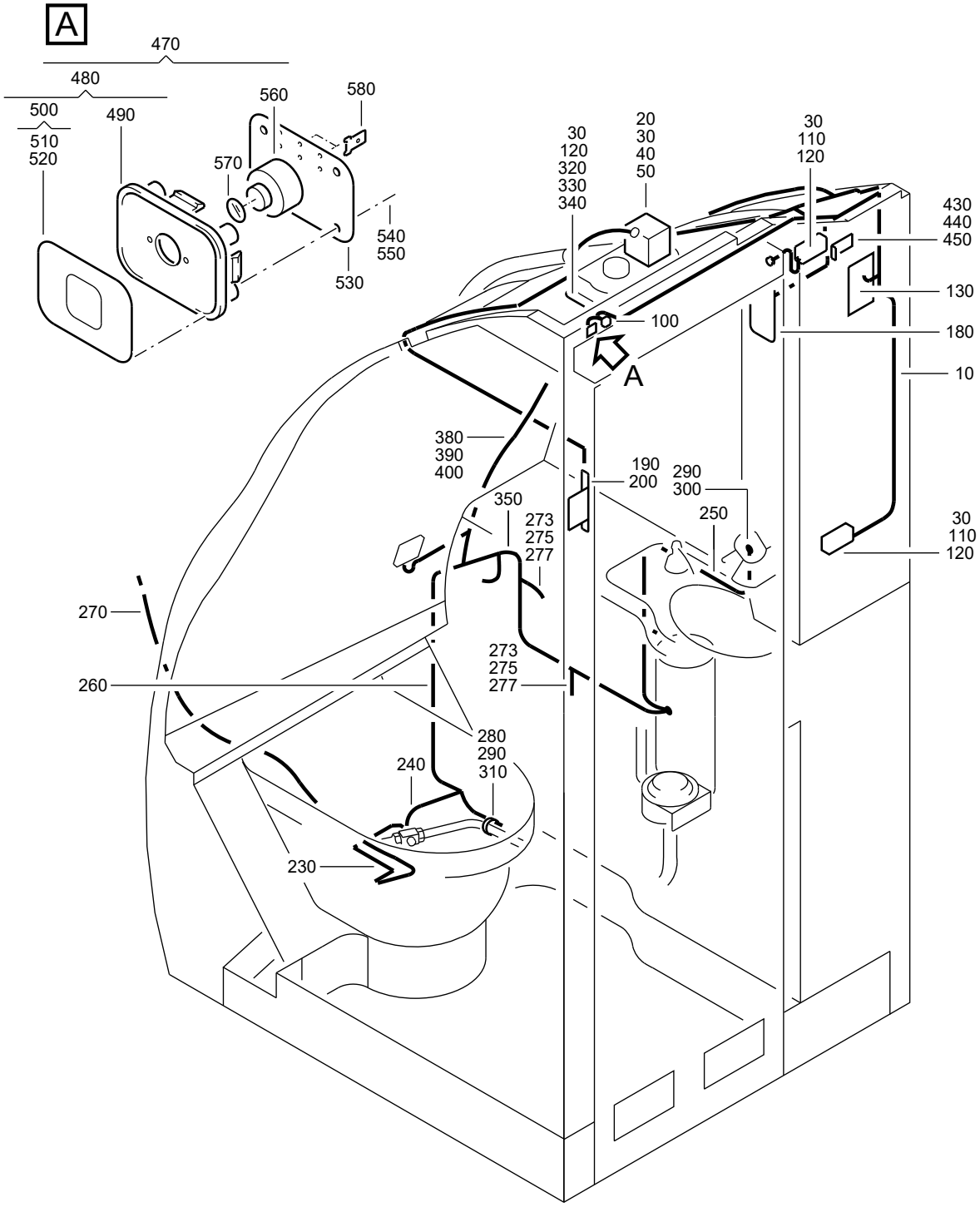

F_PL_254151_26_N_01_00

FIG. ITEM	PART NUMBER	AIRLINE STOCK NUMBER	NOMENCLATURE 1234567		EFF CODE	UNITS PER ASSY
26N						
-001A	D2549020514883		. ELECTRICAL SYSTEM used on 200A (25415141P), 200B (25415141V), 200B (25415141Y), 200B (25415141Z), 200D (25415142A), 200B (25415142C), 200B (25415142D) SEE 25-41-51-41P FOR NHA SEE 25-41-51-41V FOR NHA SEE 25-41-51-41Y FOR NHA SEE 25-41-51-41Z FOR NHA SEE 25-41-51-42A FOR NHA SEE 25-41-51-42C FOR NHA SEE 25-41-51-42D FOR NHA	NP		RF
-001B	D2549020510483		. ELECTRICAL SYSTEM used on 200C (25415141P), 200A (25415141W), 200D (254151420), 200B (25415142A), 200C (25415142E) SEE 25-41-51-41P FOR NHA SEE 25-41-51-41W FOR NHA SEE 25-41-51-420 FOR NHA SEE 25-41-51-42A FOR NHA SEE 25-41-51-42E FOR NHA	NP		RF
-001C	D2549030613783		. ELECTRICAL SYSTEM POST SB 26-1058 used on 200D (25415141P), 200G (25415141W), 200E (254151420), 200F (25415142A) SEE 25-41-51-41P FOR NHA SEE 25-41-51-41W FOR NHA SEE 25-41-51-420 FOR NHA SEE 25-41-51-42A FOR NHA	NP		RF
010A	A292901305-002		. . HARNESS ASSY-CABLE used on 001A SEE 25-41-51-27C FOR DET			001

- ITEM NOT ILLUSTRATED

FIG. ITEM	PART NUMBER	AIRLINE STOCK NUMBER	NOMENCLATURE 1234567	EFF CODE	UNITS PER ASSY
-010B	A292901305-006		. . HARNESS ASSY-CABLE used on 001B, 001C SEE 25-41-51-27C FOR DET		001
020A	PPA1201-00		. . DETECTOR-SMOKE used on 001A, 001B		001
-020B	PPA1202-00		. . DETECTOR-SMOKE POST SB 26-1058 used on 001A, 001B, 001C		001
030A	NAS1149CN832R		. . WASHER used on 001A, 001B, 001C		016
040A	NAS1100-08-8		. . SCREW used on 001A, 001B, 001C		004
050A	5L0064200100000		. . SEALING-SMOKE DETECTOR used on 001A, 001B, 001C		001
100A	F1000240-01		. . LIGHT-CALL POST SB 25-1554 used on 001A, 001B, 001C		001
110A	A292500300-200		. . BRACKET used on 001A, 001B, 001C		002
120A	NAS1096-2-7		. . SCREW BUY PN NAS1801-08-7 used on 001A, 001B, 001C		016
130A	F1000270-00		. . LIGHT ASSY POST SB 25-1554 used on 001A, 001B, 001C		001
180A	4913211080		. . LOUDSPEAKER used on 001A, 001B, 001C		001

- ITEM NOT ILLUSTRATED

FIG. ITEM	PART NUMBER	AIRLINE STOCK NUMBER	NOMENCLATURE 1234567	EFF CODE	UNITS PER ASSY
190A	A392500305-000		. . MICROSWITCH used on 001A, 001B, 001C		001
200A	NAS514P832-7		. . SCREW used on 001A, 001B, 001C		002
-210A	NSA935401-03		. . TIE-CABLE used on 001A, 001B, 001C		050
-220A	NSA935405-01		. . MOUNT used on 001A, 001B, 001C		025
230A	DCIN600-0510		. . STRAP-BONDING used on 001A, 001B, 001C		001
240A	DCIN600-0510		. . STRAP-BONDING used on 001A, 001B, 001C		001
250A	DCIN600-0510		. . STRAP-BONDING used on 001A, 001B, 001C		001
260A	DCIN600-1580		. . STRAP-BONDING used on 001A, 001B, 001C		001
270A	DCIN601-0620		. . STRAP-BONDING used on 001A, 001B, 001C		001
273A	DCIN600-0650		. . STRAP-BONDING used on 001B, 001C		002
275A	NAS1096-2-7		. . SCREW BUY PN NAS1801-08-7 used on 001B, 001C		002
277A	NAS1149CN832R		. . WASHER used on 001B, 001C		002
280A	NAS1096-3-16		. . SCREW BUY PN NAS1801-3-16 used on 001A, 001B, 001C		001

- ITEM NOT ILLUSTRATED

FIG. ITEM	PART NUMBER	AIRLINE STOCK NUMBER	NOMENCLATURE 1234567	EFF CODE	UNITS PER ASSY
290A	ASNA0113-48ADL		. . WASHER used on 001A, 001B, 001C		002
300A	MS21042-3		. . NUT used on 001A, 001B, 001C		001
310A	NSA5575-7		. . CLAMP used on 001A, 001B, 001C		001
320A	NAS1149CN432R		. . WASHER used on 001A, 001B, 001C		008
330A	NAS1100-04-6		. . SCREW used on 001A, 001B, 001C		004
340A	MS21042-04		. . NUT used on 001A, 001B, 001C		008
350A	A292901310-000		. . CABLE-CABIN ATTENDANT SEAT,AMI used on 001A, 001B, 001C		001
-360A	NSA938151PA2000		. . . CONTACT-PIN BUY PN EN3155-018M2018 used on 350A		026
-370A	NSA938152SA2000		. . . CONTACT-SOCKET BUY PN EN3155-019F2018 used on 350A		019
380A	E0052R14B19SNE		. . . CONNECTOR-PLUG used on 350A		001
390A	ABS0638B14		. . . BACKSHELL-CONNECTOR used on 350A		001
400A	ABS0364B26PC		. . . CONNECTOR-PLUG BUY PN ABS0364B26P used on 350A		001

- ITEM NOT ILLUSTRATED

FIG. ITEM	PART NUMBER	AIRLINE STOCK NUMBER	NOMENCLATURE 1234567	EFF CODE	UNITS PER ASSY
-410A	ABS0364C		. . . BRACKET-CABLE used on 350A		001
-420A	ABS0364D		. . . CAP-PROTECTIVE used on 350A		001
430A	4056		. . INVERTER-MINI used on 001A, 001B, 001C		001
440A	NSA5527-03-01		. . SPACER used on 001A, 001B, 001C		004
450A	NAS1100-06-12		. . SCREW used on 001A, 001B, 001C		004
470A	D9259036500200		. . PANEL-SWITCH,2065VU used on 001A, 001B, 001C		001
480A	D9259018203400		. . . HOUSING ASSY-SWITCH used on 470A		001
490A	D9259018400800		. . . . HOUSING-SWITCH used on 480A		001
500A	D9259024203400		. . . . FOIL ASSY used on 480A		001
510A	D9259024223400		. . . . . FOIL used on 500A		001
520A	D9259018220200		. . . . . FILM-ADHESIVE used on 500A		001
530A	D9259023820600		. . . PCB-PRINTED CIRCUIT BOARD used on 470A		001
540A	NAS1100E04-5		. . . SCREW used on 470A		004

- ITEM NOT ILLUSTRATED

FIG. ITEM	PART NUMBER	AIRLINE STOCK NUMBER	NOMENCLATURE 1234567	EFF CODE	UNITS PER ASSY
550A	DIN137A3B2C		. . . WASHER-SPRING BUY PN DIN137B3B2C used on 470A		004
560A	811215100		. . . SWITCH-BUTTON,SWITCH used on 470A		001
570A	800003511		. . . LENS-PROTECTIVE used on 470A		001
580A	726388-3		. . . PLUG used on 470A		002

- ITEM NOT ILLUSTRATED

THIS PAGE IS INTENTIONALLY LEFT BLANK

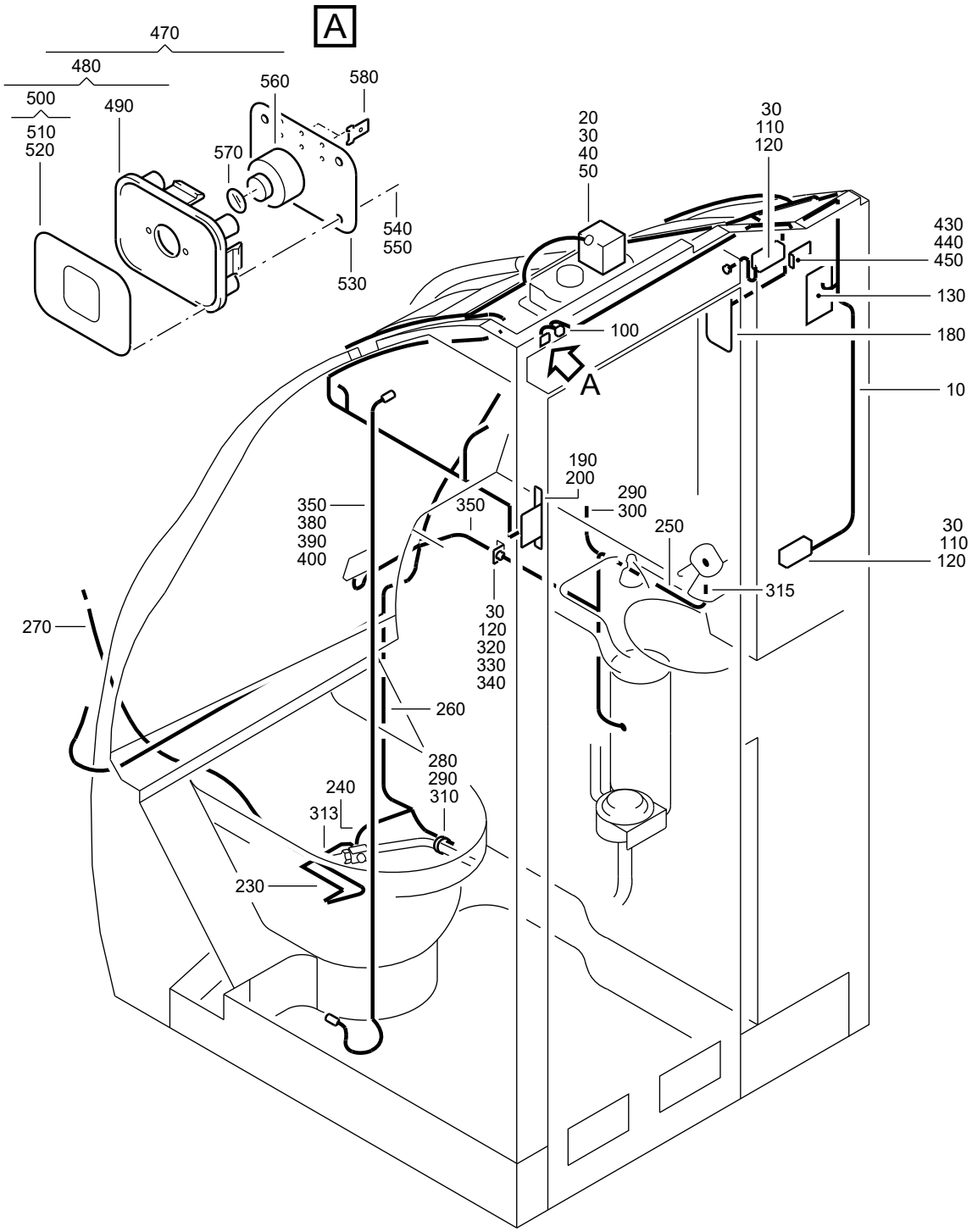

F_PL_254151_26_P_01_00

ELECTRICAL SYSTEM
Figure 26P/EN254151SHEET26P01

FIG. ITEM	PART NUMBER	AIRLINE STOCK NUMBER	NOMENCLATURE 1234567		EFF CODE	UNITS PER ASSY
26P						
-001A	D2549020810283		. ELECTRICAL SYSTEM PRE VSB A2-254-25-130 used on 200E (25415141W), 200D (25415141X), 200D (25415141Y), 200C (254151420), 200C (25415142A), 200D (25415142B), 200C (25415142C), 200A (25415142D), 200B(25415142E), 200C (25415142F), 200D (25415142G) SEE 25-41-51-41W FOR NHA SEE 25-41-51-41X FOR NHA SEE 25-41-51-41Y FOR NHA SEE 25-41-51-420 FOR NHA SEE 25-41-51-42A FOR NHA SEE 25-41-51-42B FOR NHA SEE 25-41-51-42C FOR NHA SEE 25-41-51-42D FOR NHA SEE 25-41-51-42E FOR NHA SEE 25-41-51-42F FOR NHA SEE 25-41-51-42G FOR NHA	NP		RF
-001B	D2549030404483		. ELECTRICAL SYSTEM used on 200F (25415141W), 200C (25415141X), 200D (25415142E) SEE 25-41-51-41W FOR NHA SEE 25-41-51-41X FOR NHA SEE 25-41-51-42E FOR NHA	NP		RF
-001C	D2549030404683		. ELECTRICAL SYSTEM used on 200A (254151420) SEE 25-41-51-420 FOR NHA	NP		RF

- ITEM NOT ILLUSTRATED

FIG. ITEM	PART NUMBER	AIRLINE STOCK NUMBER	NOMENCLATURE 1234567		EFF CODE	UNITS PER ASSY
-001D	D2549030408283		. ELECTRICAL SYSTEM used on 200C (25415142D), 200A (25415142F), 200E (25415142G), 200C (25415142K) SEE 25-41-51-42D FOR NHA SEE 25-41-51-42F FOR NHA SEE 25-41-51-42G FOR NHA SEE 25-41-51-42K FOR NHA	NP		RF
-001E	D2549020404483		. EQUIPMENT INSTL-Z120 used on 200B (25415142F) SEE 25-41-51-42F FOR NHA	NP		RF
-001F	R22540119605483		. ELECTRICAL SYSTEM POST VSB A2-254-25-130 used on 200H (25415141W), 200F (25415141X), 200F (254151420) SEE 25-41-51-41W FOR NHA SEE 25-41-51-41X FOR NHA SEE 25-41-51-420 FOR NHA	NP		RF
010A	A292901305-000		. . HARNESS ASSY-CABLE used on 001A, 001C, 001E, 001F SEE 25-41-51-27C FOR DET			001
-010B	A292901305-012		. . HARNESS ASSY-CABLE used on 001B SEE 25-41-51-27C FOR DET			001
-010C	A292901305-002		. . HARNESS ASSY-CABLE used on 001D SEE 25-41-51-27C FOR DET			001
020A	PPA1202-00		. . DETECTOR-SMOKE used on 001A, 001B, 001C, 001D, 001E, 001F			001
030A	NAS1149CN832R		. . WASHER used on 001A, 001B, 001C, 001D, 001E, 001F			016

- ITEM NOT ILLUSTRATED

FIG. ITEM	PART NUMBER	AIRLINE STOCK NUMBER	NOMENCLATURE 1234567	EFF CODE	UNITS PER ASSY
040A	NAS1100-08-12		. . SCREW used on 001A, 001B, 001E, 001F		004
-040B	NAS1100-08-8		. . SCREW used on 001C, 001D		004
050A	5L0064200100000		. . SEALING-SMOKE DETECTOR used on 001A, 001B, 001C, 001D, 001E, 001F		001
100A	F1000240-01		. . LIGHT-CALL used on 001A, 001B, 001D, 001E, 001F		001
-100B	10-1358-1		. . LIGHT-CALL used on 001C		001
110A	A292500300-200		. . BRACKET used on 001A, 001B, 001C, 001D, 001E, 001F		002
120A	NAS1096-2-7		. . SCREW BUY PN NAS1801-08-7 used on 001A, 001B, 001C, 001D, 001E, 001F		016
130A	F1000270-00		. . LIGHT ASSY used on 001A, 001B, 001C, 001D, 001E, 001F		001
180A	4913211080		. . LOUDSPEAKER used on 001A, 001B, 001C, 001D, 001E, 001F		001
190A	A392500305-000		. . MICROSWITCH used on 001A, 001B, 001C, 001D, 001E, 001F		001

- ITEM NOT ILLUSTRATED

FIG. ITEM	PART NUMBER	AIRLINE STOCK NUMBER	NOMENCLATURE 1234567	EFF CODE	UNITS PER ASSY
200A	NAS514P832-7		. . SCREW used on 001A, 001B, 001C, 001D, 001E, 001F		002
-210A	NSA935401-03		. . TIE-CABLE used on 001A, 001B, 001C, 001D, 001E, 001F		050
-220A	NSA935405-01		. . MOUNT used on 001A, 001B, 001C, 001D, 001E, 001F		025
230A	DCIN600-0510		. . STRAP-BONDING used on 001A, 001B, 001C, 001D, 001E, 001F		001
240A	DCIN600-0510		. . STRAP-BONDING used on 001A, 001B, 001C, 001D, 001E, 001F		001
250A	DCIN600-0510		. . STRAP-BONDING used on 001A, 001B, 001C, 001D, 001E, 001F		001
-255A	DCIN600-0280		. . STRAP-BONDING POST VSB A2-254-25-130 used on 001F		001
260A	DCIN600-1580		. . STRAP-BONDING used on 001A, 001B, 001C, 001D, 001E, 001F		001
270A	DCIN601-0620		. . STRAP-BONDING used on 001A, 001B, 001C, 001D, 001E, 001F		001
280A	NAS1096-3-16		. . SCREW BUY PN NAS1801-3-16 used on 001A, 001B, 001C, 001D, 001E, 001F		001

- ITEM NOT ILLUSTRATED

FIG. ITEM	PART NUMBER	AIRLINE STOCK NUMBER	NOMENCLATURE 1234567	EFF CODE	UNITS PER ASSY
290A	ASNA0113-48ADL		. . WASHER used on 001A, 001B, 001C, 001D, 001E, 001F		002
-295A	ASNA0113-40ADL		. . WASHER POST VSB A2-254-25-130 used on 001F		001
300A	MS21042-3		. . NUT used on 001A, 001B, 001C, 001D, 001E, 001F		001
-305A	MS21042-08		. . NUT POST VSB A2-254-25-130 used on 001F		001
310A	NSA5575-7		. . CLAMP used on 001A, 001B, 001C, 001D, 001E, 001F		001
313A	DCIN600-0510		. . STRAP-BONDING used on 001A, 001B, 001C, 001D, 001E, 001F		001
315A	DCIN600-0950		. . STRAP-BONDING used on 001D, 001E		001
-317A	NSA935805-04		. . ELECTRICAL CONDUIT REQUIRED LENGTH 200 MM used on 001D, 001E		001
320A	NAS1149CN432R		. . WASHER used on 001A, 001B, 001C, 001D, 001E, 001F		008
330A	NAS1100-04-6		. . SCREW used on 001A, 001B, 001C, 001D, 001E, 001F		004

- ITEM NOT ILLUSTRATED

FIG. ITEM	PART NUMBER	AIRLINE STOCK NUMBER	NOMENCLATURE 1234567	EFF CODE	UNITS PER ASSY
340A	MS21042-04		. . NUT used on 001A, 001B, 001C, 001D, 001E, 001F		008
350A	A292901310-000		. . CABLE-CABIN ATTENDANT SEAT,AMI used on 001A, 001B, 001C, 001D, 001E, 001F		001
-360A	NSA938151PA2000		. . . CONTACT-PIN BUY PN EN3155-018M2018 used on 350A		026
-370A	NSA938152SA2000		. . . CONTACT-SOCKET BUY PN EN3155-019F2018 used on 350A		019
380A	E0052R14B19SNE		. . . CONNECTOR-PLUG used on 350A		001
390A	ABS0638B14		. . . BACKSHELL-CONNECTOR used on 350A		001
400A	ABS0364B26PC		. . . CONNECTOR-PLUG BUY PN ABS0364B26P used on 350A		001
-410A	ABS0364C		. . . BRACKET-CABLE used on 350A		001
-420A	ABS0364D		. . . CAP-PROTECTIVE used on 350A		001
430A	4056		. . INVERTER-MINI used on 001A, 001C, 001D, 001E, 001F		001
440A	NSA5527-03-01		. . SPACER used on 001A, 001C, 001D, 001E, 001F		004

- ITEM NOT ILLUSTRATED

FIG. ITEM	PART NUMBER	AIRLINE STOCK NUMBER	NOMENCLATURE 1234567	EFF CODE	UNITS PER ASSY
450A	NAS1100-06-12		. . SCREW used on 001A, 001C, 001D, 001E, 001F		004
470A	D9259036500200		. . PANEL-SWITCH,2065VU used on 001D		001
480A	D9259018203400		. . . HOUSING ASSY-SWITCH used on 470A		001
490A	D9259018400800		. . . . HOUSING-SWITCH used on 480A		001
500A	D9259024203400		. . . . FOIL ASSY used on 480A		001
510A	D9259024223400		. . . . . FOIL used on 500A		001
520A	D9259018220200		. . . . . FILM-ADHESIVE used on 500A		001
530A	D9259023820600		. . . PCB-PRINTED CIRCUIT BOARD used on 470A		001
540A	NAS1100E04-5		. . . SCREW used on 470A		004
550A	DIN137A3B2C		. . . WASHER-SPRING BUY PN DIN137B3B2C used on 470A		004
560A	811215100		. . . SWITCH-BUTTON,SWITCH used on 470A		001
570A	800003511		. . . LENS-PROTECTIVE used on 470A		001
580A	726388-3		. . . PLUG used on 470A		002

- ITEM NOT ILLUSTRATED

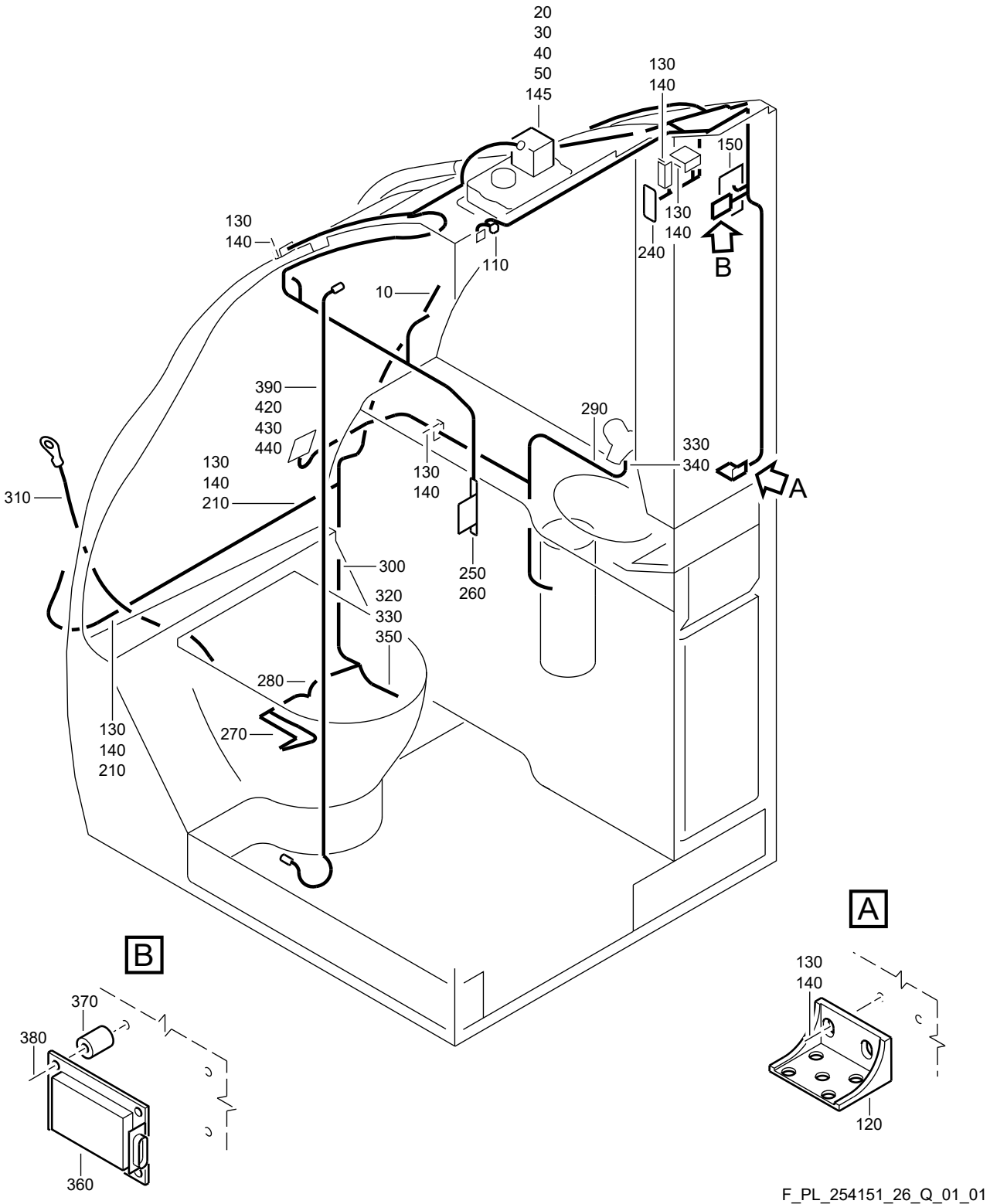

F_PL_254151_26_Q_01_01

ELECTRICAL SYSTEM
Figure 26Q/EN254151SHEET26Q01

FIG. ITEM	PART NUMBER	AIRLINE STOCK NUMBER	NOMENCLATURE 1234567	EFF CODE	UNITS PER ASSY
26Q					
-001A	D2549040500283		. ELECTRICAL SYSTEM NP used on 200B (25415142B), 200C (25415142H) SEE 25-41-51-42B FOR NHA SEE 25-41-51-42H FOR NHA		RF
-001B	D2549040500683		. ELECTRICAL SYSTEM NP used on 200C (25415142G), 200D (25415142H), 200G (25415142K) SEE 25-41-51-42G FOR NHA SEE 25-41-51-42H FOR NHA SEE 25-41-51-42K FOR NHA		RF
-001C	F2547160007483		. ELECTRICAL SYSTEM NP POST SB 25-1640 used on 200E (25415101H), 200C (25415101L), 200D (25415141F), 200D (25415141H), 200F (25415142B) SEE 25-41-51-01H FOR NHA SEE 25-41-51-01L FOR NHA SEE 25-41-51-41F FOR NHA SEE 25-41-51-41H FOR NHA SEE 25-41-51-42B FOR NHA		RF
010A	A292901307-000		. . HARNESS ASSY-CABLE POST SB 25-1640 used on 001A, 001C SEE 25-41-51-27D FOR DET		001
-010B	A292901307-002		. . HARNESS ASSY-CABLE used on 001B SEE 25-41-51-27D FOR DET		001
020A	PPC1200-00		. . DETECTOR-SMOKE used on 001A, 001B, 001C		001

- ITEM NOT ILLUSTRATED

FIG. ITEM	PART NUMBER	AIRLINE STOCK NUMBER	NOMENCLATURE 1234567	EFF CODE	UNITS PER ASSY
030A	5L0064200100000		. . SEALING-SMOKE DETECTOR used on 001A, 001B, 001C		001
040A	NAS1100-08-8		. . SCREW used on 001A, 001B, 001C		004
050A	MS21042-08		. . NUT used on 001A, 001B, 001C		004
110A	F1000240-01		. . LIGHT-CALL used on 001A, 001B, 001C		001
120A	A292500300-200		. . BRACKET used on 001A, 001B, 001C		001
130A	NAS1801-08-4		. . SCREW POST SB 25-1640 used on 001A, 001B, 001C		012
140A	NAS1149CN832R		. . WASHER used on 001A, 001B, 001C		012
145A	NAS1149CN832R		. . WASHER POST SB 25-1640 used on 001C		004
150A	F1000270-00		. . LIGHT ASSY used on 001A, 001B, 001C		001
-200A	NSA935401-04		. . TIE-CABLE used on 001A, 001B, 001C		012
210A	NSA935504-01		. . BRACKET used on 001A, 001B, 001C		002
-220A	NSA935401-03		. . TIE-CABLE used on 001A, 001B, 001C		030

- ITEM NOT ILLUSTRATED

FIG. ITEM	PART NUMBER	AIRLINE STOCK NUMBER	NOMENCLATURE 1234567	EFF CODE	UNITS PER ASSY
-230A	NSA935405-01		. . MOUNT used on 001A, 001B, 001C		025
240A	4913211082		. . LOUDSPEAKER used on 001A, 001B, 001C		001
250A	A392500305-000		. . MICROSWITCH used on 001A, 001B, 001C		001
260A	NAS514P832-7		. . SCREW used on 001A, 001B, 001C		002
270A	DCIN600-0510		. . STRAP-BONDING used on 001A, 001B, 001C		001
280A	DCIN600-0510		. . STRAP-BONDING used on 001A, 001B, 001C		001
290A	DCIN600-0510		. . STRAP-BONDING used on 001A, 001B, 001C		001
300A	DCIN600-1580		. . STRAP-BONDING used on 001A, 001B, 001C		001
310A	DCIN601-0620		. . STRAP-BONDING used on 001A, 001B, 001C		001
320A	NAS1096-3-16		. . SCREW BUY PN NAS1801-3-16 used on 001A, 001B, 001C		001
330A	ASNA0113-48ADL		. . WASHER used on 001A, 001B, 001C		002
340A	MS21042-3		. . NUT used on 001A, 001B, 001C		001
350A	NSA5575-7		. . CLAMP used on 001A, 001B, 001C		001

- ITEM NOT ILLUSTRATED

FIG. ITEM	PART NUMBER	AIRLINE STOCK NUMBER	NOMENCLATURE 1234567	EFF CODE	UNITS PER ASSY
360A	4056		. . INVERTER-MINI used on 001A, 001B, 001C		001
370A	NSA5527-03-01		. . SPACER used on 001A, 001B, 001C		004
380A	NAS1100-06-12		. . SCREW used on 001A, 001B, 001C		004
390A	A292901310-000		. . CABLE-CABIN ATTENDANT SEAT,AMI used on 001A		001
-390B	A292901310-002		. . CABLE-CABIN ATTENDANT SEAT,AMI POST SB 25-1640 used on 001B, 001C		001
-400A	NSA938151PA2000		. . . CONTACT-PIN BUY PN EN3155-018M2018 used on 390A, 390B		026
-410A	NSA938152SA2000		. . . CONTACT-SOCKET BUY PN EN3155-019F2018 used on 390A, 390B		019
420A	E0052R14B19SNE		. . . CONNECTOR-PLUG used on 390A, 390B		001
430A	ABS0638B14		. . . BACKSHELL-CONNECTOR used on 390A, 390B		001
440A	ABS0364B26PC		. . . CONNECTOR-PLUG BUY PN ABS0364B26P used on 390A, 390B		001
-450A	ABS0364C		. . . BRACKET-CABLE used on 390A, 390B		001

- ITEM NOT ILLUSTRATED

FIG. ITEM	PART NUMBER	AIRLINE STOCK NUMBER	NOMENCLATURE 1234567	EFF CODE	UNITS PER ASSY
-460A	ABS0364D		. . . CAP-PROTECTIVE used on 390A, 390B		001
-470A	E0718-01		. . TUBING-HEAT-SHRINKABLE USE AS REQUIRED POST SB 25-1640 used on 001A, 001B, 001C		AR
-480A	E0718-02		. . TUBING-HEAT-SHRINKABLE USE AS REQUIRED POST SB 25-1640 used on 001A, 001B, 001C		AR
-490A	3416404		. . SOCKET POST SB 25-1640 used on 001C		003

- ITEM NOT ILLUSTRATED

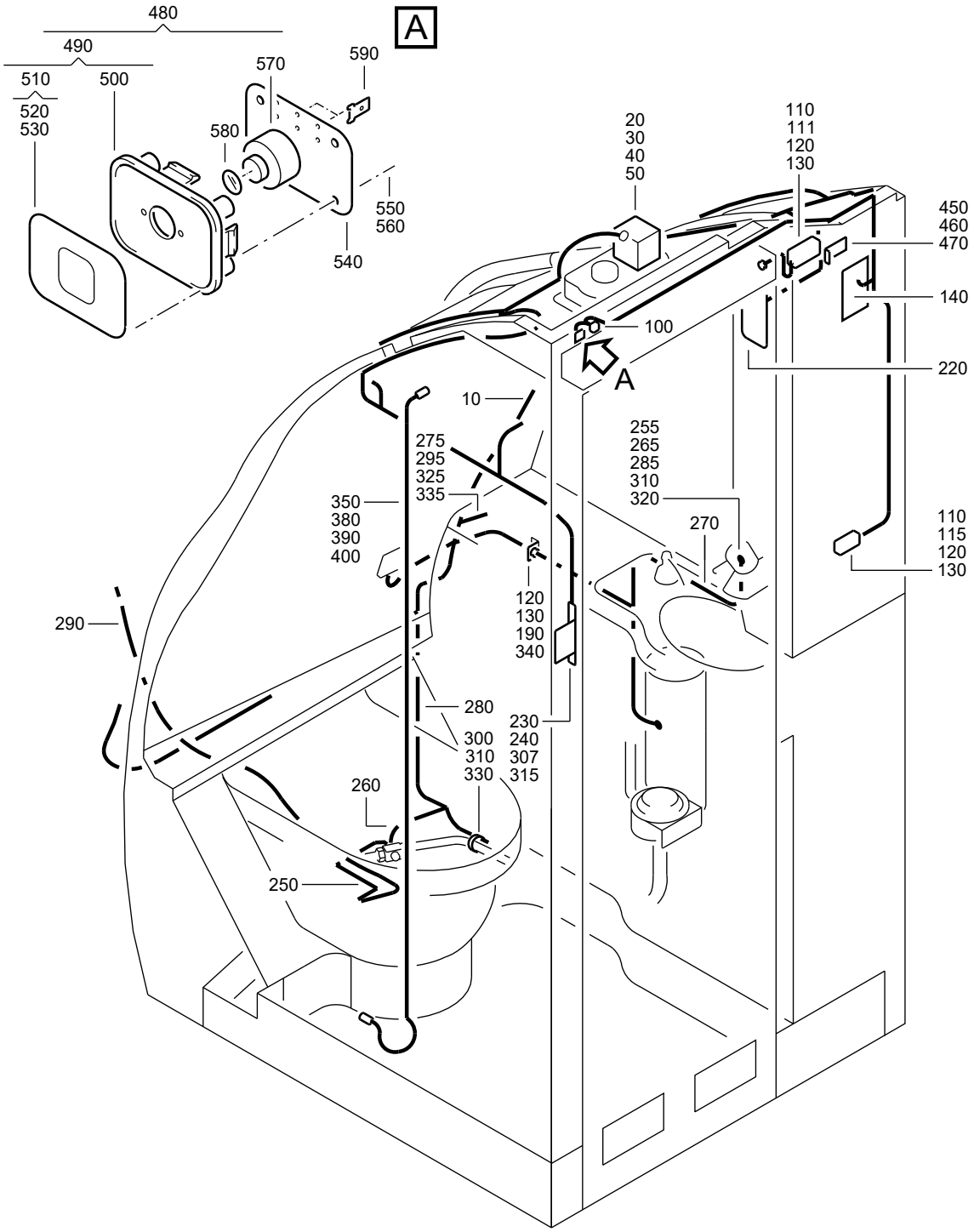

F_PL_254151_26_R_01_00

FIG. ITEM	PART NUMBER	AIRLINE STOCK NUMBER	NOMENCLATURE 1234567	EFF CODE	UNITS PER ASSY
26R -001A	D2549030410283		. ELECTRICAL SYSTEM NP PRE VSB A2-254-25-130 used on 200F (25415142E), 200D (25415142F), 200A (25415142G), 200B (25415142H), 200A (25415142J), 200B(25415142K), 200A (25415142L), 200A (25415142M), 200C (25415142N), 200A (25415142P), 200D (25415142Q), 200C(25415142R), 200C (25415142S), 200B (25415142T), 200C(25415142U) SEE 25-41-51-42E FOR NHA SEE 25-41-51-42F FOR NHA SEE 25-41-51-42G FOR NHA SEE 25-41-51-42H FOR NHA SEE 25-41-51-42J FOR NHA SEE 25-41-51-42K FOR NHA SEE 25-41-51-42L FOR NHA SEE 25-41-51-42M FOR NHA SEE 25-41-51-42N FOR NHA SEE 25-41-51-42P FOR NHA SEE 25-41-51-42Q FOR NHA SEE 25-41-51-42R FOR NHA SEE 25-41-51-42S FOR NHA SEE 25-41-51-42T FOR NHA SEE 25-41-51-42U FOR NHA		RF

- ITEM NOT ILLUSTRATED

FIG. ITEM	PART NUMBER	AIRLINE STOCK NUMBER	NOMENCLATURE 1234567		EFF CODE	UNITS PER ASSY
-001B	D2549020400883		. ELECTRICAL SYSTEM used on 200F (25415142G), 200A (25415142H), 200D (25415142K), 200C (25415142L), 200C (25415142M), 200A (25415142Q), 200B (25415142R), 200A (25415142S), 200D(25415142T), 200B (25415142U) SEE 25-41-51-42G FOR NHA SEE 25-41-51-42H FOR NHA SEE 25-41-51-42K FOR NHA SEE 25-41-51-42L FOR NHA SEE 25-41-51-42M FOR NHA SEE 25-41-51-42Q FOR NHA SEE 25-41-51-42R FOR NHA SEE 25-41-51-42S FOR NHA SEE 25-41-51-42T FOR NHA SEE 25-41-51-42U FOR NHA	NP		RF
-001C	D2549020401283		. ELECTRICAL SYSTEM used on 200E (25415142E), 200B (25415142P) SEE 25-41-51-42E FOR NHA SEE 25-41-51-42P FOR NHA	NP		RF
-001D	D2549020402283		. ELECTRICAL SYSTEM used on 200G (25415142G), 200B (25415142J), 200E (25415142K) SEE 25-41-51-42G FOR NHA SEE 25-41-51-42J FOR NHA SEE 25-41-51-42K FOR NHA	NP		RF

- ITEM NOT ILLUSTRATED

FIG. ITEM	PART NUMBER	AIRLINE STOCK NUMBER	NOMENCLATURE 1234567		EFF CODE	UNITS PER ASSY
-001E	D2549010610683		. ELECTRICAL SYSTEM used on 200G (25415142E), 200D (25415142J), 200H (25415142K), 200B (25415142N), 200E (25415142R) SEE 25-41-51-42E FOR NHA SEE 25-41-51-42J FOR NHA SEE 25-41-51-42K FOR NHA SEE 25-41-51-42N FOR NHA SEE 25-41-51-42R FOR NHA	NP		RF
-001F	D2549030409083		. ELECTRICAL SYSTEM used on 200H (25415142E) SEE 25-41-51-42E FOR NHA	NP		RF
-001G	D2549020406883		. ELECTRICAL SYSTEM used on 200A (25415142K) SEE 25-41-51-42K FOR NHA	NP		RF
-001H	D2549030412283		. ELECTRICAL SYSTEM used on 200B (25415142L), 200F (25415142S) SEE 25-41-51-42L FOR NHA SEE 25-41-51-42S FOR NHA	NP		RF
-001J	D2549010401683		. ELECTRICAL SYSTEM used on 200C (25415142J) SEE 25-41-51-42J FOR NHA	NP		RF
-001K	D2549010403483		. ELECTRICAL SYSTEM used on 200E (25415142L), 200E (25415142N), 200F(25415142T) SEE 25-41-51-42L FOR NHA SEE 25-41-51-42N FOR NHA SEE 25-41-51-42T FOR NHA	NP		RF

- ITEM NOT ILLUSTRATED

FIG. ITEM	PART NUMBER	AIRLINE STOCK NUMBER	NOMENCLATURE 1234567		EFF CODE	UNITS PER ASSY
-001L	D2549020409883		. ELECTRICAL SYSTEM used on 200E (25415142B), 200E (25415142M), 200A(25415142N), 200D (25415142S), 200E (25415142T) SEE 25-41-51-42B FOR NHA SEE 25-41-51-42M FOR NHA SEE 25-41-51-42N FOR NHA SEE 25-41-51-42S FOR NHA SEE 25-41-51-42T FOR NHA	NP		RF
-001M	D2549030413483		. ELECTRICAL SYSTEM used on 200F (25415142N), 200G (25415142T) SEE 25-41-51-42N FOR NHA SEE 25-41-51-42T FOR NHA	NP		RF
-001N	R22540119606483		. ELECTRICAL SYSTEM POST VSB A2-254-25-130 used on 200J (25415142E), 200E (25415142J), 200D (25415142P) SEE 25-41-51-42E FOR NHA SEE 25-41-51-42J FOR NHA SEE 25-41-51-42P FOR NHA	NP		RF
010A	A292901309-000		. . HARNESS ASSY-CABLE used on 001A, 001J, 001K, 001L, 001N SEE 25-41-51-27E FOR DET			001
-010B	A292901309-002		. . HARNESS ASSY-CABLE used on 001B, 001H SEE 25-41-51-27E FOR DET			001
-010C	A292901309-008		. . HARNESS ASSY-CABLE used on 001C SEE 25-41-51-27E FOR DET			001
-010D	A292901309-004		. . HARNESS ASSY-CABLE used on 001D, 001E, 001M SEE 25-41-51-27E FOR DET			001

- ITEM NOT ILLUSTRATED

FIG. ITEM	PART NUMBER	AIRLINE STOCK NUMBER	NOMENCLATURE 1234567	EFF CODE	UNITS PER ASSY
-010E	A292901309-012		. . HARNESS ASSY-CABLE used on 001F SEE 25-41-51-27E FOR DET		001
-010F	A292901309-010		. . HARNESS ASSY-CABLE used on 001G SEE 25-41-51-27E FOR DET		001
020A	PPA1202-00		. . DETECTOR-SMOKE used on 001A, 001B, 001C, 001D, 001E, 001F, 001G, 001H, 001J, 001K, 001L, 001M, 001N		001
030A	5L0064200100000		. . SEALING-SMOKE DETECTOR used on 001A, 001B, 001C, 001D, 001E, 001F, 001G, 001H, 001J, 001K, 001L, 001M, 001N		001
040A	NAS1100-08-8		. . SCREW used on 001A, 001B, 001C, 001D, 001E, 001F, 001G, 001H, 001J, 001K, 001L, 001M, 001N		004
050A	MS21042-08		. . NUT used on 001A, 001B, 001C, 001D, 001E, 001F, 001G, 001H, 001J, 001K, 001L, 001M, 001N		004
100A	F1000240-01		. . LIGHT-CALL POST SB 25-1554 used on 001A, 001B, 001C, 001D, 001E, 001G, 001H, 001J, 001K, 001L, 001M, 001N		001
-100B	10-1358-1		. . LIGHT-CALL used on 001F		001

- ITEM NOT ILLUSTRATED

FIG. ITEM	PART NUMBER	AIRLINE STOCK NUMBER	NOMENCLATURE 1234567	EFF CODE	UNITS PER ASSY
110A	A292500300-200		. . BRACKET used on 001A, 001B, 001C, 001D, 001E, 001F, 001G, 001H, 001J, 001L, 001M, 001N		002
111A	A292500300-200		. . BRACKET used on 001K		001
115A	A292500300-220		. . BRACKET used on 001K		001
120A	NAS1096-2-4		. . SCREW BUY PN NAS1801-08-4 used on 001A, 001B, 001C, 001D, 001E, 001F, 001G, 001H, 001J, 001K, 001L, 001M, 001N		014
130A	NAS1149CN832R		. . WASHER used on 001A, 001B, 001C, 001D, 001E, 001F, 001G, 001H, 001J, 001K, 001L, 001M, 001N		020
140A	F1000270-00		. . LIGHT ASSY POST SB 25-1554 used on 001A, 001B, 001C, 001D, 001E, 001F, 001G, 001H, 001J, 001K, 001L, 001M, 001N		001
190A	NSA935401-04		. . TIE-CABLE used on 001A, 001B, 001C, 001D, 001E, 001F, 001G, 001H, 001J, 001K, 001L, 001M, 001N		010
-200A	NSA935401-03		. . TIE-CABLE used on 001A, 001B, 001C, 001D, 001E, 001F, 001G, 001H, 001J, 001K, 001L, 001M, 001N		030

- ITEM NOT ILLUSTRATED

FIG. ITEM	PART NUMBER	AIRLINE STOCK NUMBER	NOMENCLATURE 1234567	EFF CODE	UNITS PER ASSY
-210A	NSA935405-01		. . MOUNT used on 001A, 001B, 001C, 001D, 001E, 001F, 001G, 001H, 001J, 001K, 001L, 001M, 001N		032
220A	4913211080		. . LOUDSPEAKER used on 001A, 001B, 001C, 001D, 001E, 001F, 001G, 001H, 001J, 001K, 001L, 001M, 001N		001
230A	A392500305-000		. . MICROSWITCH used on 001A, 001B, 001C, 001D, 001E, 001F, 001G, 001H, 001J, 001K, 001L, 001M, 001N		001
240A	NAS514P832-7		. . SCREW used on 001A, 001B, 001C, 001D, 001E, 001F, 001G, 001H, 001J, 001K, 001L, 001M, 001N		002
-245A	NSA935401-03		. . TIE-CABLE used on 001M		020
250A	DCIN600-0510		. . STRAP-BONDING used on 001A, 001B, 001C, 001D, 001E, 001F, 001G, 001H, 001J, 001K, 001L, 001M, 001N		001
255A	DCIN600-1400		. . STRAP-BONDING used on 001M		001
260A	DCIN600-0510		. . STRAP-BONDING used on 001A, 001B, 001C, 001D, 001E, 001F, 001G, 001H, 001J, 001K, 001L, 001N		001
265A	DCIN600-0950		. . STRAP-BONDING used on 001M		001

- ITEM NOT ILLUSTRATED

FIG. ITEM	PART NUMBER	AIRLINE STOCK NUMBER	NOMENCLATURE 1234567	EFF CODE	UNITS PER ASSY
270A	DCIN600-0510		. . STRAP-BONDING used on 001A, 001B, 001C, 001D, 001E, 001F, 001G, 001H, 001J, 001K, 001L, 001N		001
-273A	DCIN600-0280		. . STRAP-BONDING POST VSB A2-254-25-130 used on 001N		001
275A	DCIN600-0540		. . STRAP-BONDING used on 001M		001
280A	DCIN600-1580		. . STRAP-BONDING used on 001A, 001B, 001C, 001D, 001E, 001F, 001G, 001H, 001J, 001K, 001L, 001M, 001N		001
285A	DCIN600-1730		. . STRAP-BONDING used on 001M		001
290A	DCIN601-0620		. . STRAP-BONDING used on 001A, 001B, 001C, 001D, 001E, 001F, 001G, 001H, 001J, 001K, 001L, 001N		001
290B	DCIN601-1000		. . STRAP-BONDING used on 001M		001
295A	DCIN600-0650		. . STRAP-BONDING used on 001D, 001E		001
-295B	DCIN600-0950		. . STRAP-BONDING used on 001H, 001L, 001M		001
-295C	DCIN600-0510		. . STRAP-BONDING used on 001J		001

- ITEM NOT ILLUSTRATED

FIG. ITEM	PART NUMBER	AIRLINE STOCK NUMBER	NOMENCLATURE 1234567	EFF CODE	UNITS PER ASSY
300A	NAS1096-3-16		. . SCREW BUY PN NAS1801-3-16 used on 001A, 001B, 001C, 001D, 001E, 001F, 001G, 001H, 001J, 001K, 001L, 001M, 001N		001
-305A	NSA935805-04		. . ELECTRICAL CONDUIT REQUIRED LENGTH 200 MM used on 001H, 001L		001
307A	NAS1096-2-16		. . SCREW BUY PN NAS1801-08-16 used on 001J		001
310A	ASNA0113-48ADL		. . WASHER used on 001A, 001B, 001C, 001D, 001E, 001F, 001G, 001H, 001J, 001K, 001L, 001M, 001N		002
-312A	ASNA0113-40ADL		. . WASHER POST VSB A2-254-25-130 used on 001N		001
315A	ASNA0113-48ADL		. . WASHER used on 001J		001
320A	MS21042-3		. . NUT used on 001A, 001B, 001C, 001D, 001E, 001F, 001G, 001H, 001J, 001K, 001L, 001M, 001N		001
-322A	MS21042-08		. . NUT POST VSB A2-254-25-130 used on 001N		001
325A	NAS1096-2-7		. . SCREW BUY PN NAS1801-08-7 used on 001D, 001E, 001M		002

- ITEM NOT ILLUSTRATED

FIG. ITEM	PART NUMBER	AIRLINE STOCK NUMBER	NOMENCLATURE 1234567	EFF CODE	UNITS PER ASSY
330A	NSA5575-7		. . CLAMP used on 001A, 001B, 001C, 001D, 001E, 001F, 001G, 001H, 001J, 001K, 001L, 001M, 001N		001
335A	NAS1149CN832R		. . WASHER used on 001D, 001E, 001M		002
340A	NAS1096-2-7		. . SCREW BUY PN NAS1801-08-7 used on 001A, 001B, 001C, 001D, 001E, 001F, 001G, 001H, 001J, 001K, 001L, 001M, 001N		004
350A	A292901310-000		. . CABLE-CABIN ATTENDANT SEAT,AMI used on 001A, 001B, 001C, 001D, 001E, 001F, 001G, 001H, 001J, 001K, 001L, 001M, 001N		001
-360A	NSA938151PA2000		. . . CONTACT-PIN BUY PN EN3155-018M2018 used on 350A		026
-370A	NSA938152SA2000		. . . CONTACT-SOCKET BUY PN EN3155-019F2018 used on 350A		019
380A	E0052R14B19SNE		. . . CONNECTOR-PLUG used on 350A		001
390A	ABS0638B14		. . . BACKSHELL-CONNECTOR used on 350A		001
400A	ABS0364B26PC		. . . CONNECTOR-PLUG BUY PN ABS0364B26P used on 350A		001
-410A	ABS0364C		. . . BRACKET-CABLE used on 350A		001

- ITEM NOT ILLUSTRATED

FIG. ITEM	PART NUMBER	AIRLINE STOCK NUMBER	NOMENCLATURE 1234567	EFF CODE	UNITS PER ASSY
-420A	ABS0364D		. . . CAP-PROTECTIVE used on 350A		001
-430A	NSA937494-01		. . TUBING-HEAT-SHRINKABLE USE AS REQUIRED REQUIRED LENGTH 300 MM used on 001A, 001B, 001C, 001D, 001E, 001F, 001G, 001H, 001J, 001K, 001L, 001M, 001N		AR
-440A	NSA937494-02		. . TUBING-HEAT-SHRINKABLE USE AS REQUIRED REQUIRED LENGTH 300 MM used on 001A, 001B, 001C, 001D, 001E, 001F, 001G, 001H, 001J, 001K, 001L, 001M, 001N		AR
450A	4056		. . INVERTER-MINI used on 001A, 001B, 001D, 001E, 001F, 001G, 001H, 001K, 001L, 001M, 001N		001
460A	NAS1100-06-12		. . SCREW used on 001A, 001B, 001D, 001E, 001F, 001G, 001H, 001K, 001L, 001M, 001N		004
470A	NSA5527-03-01		. . SPACER used on 001A, 001B, 001D, 001E, 001F, 001G, 001H, 001K, 001L, 001M, 001N		004
480A	D9259036500200		. . PANEL-SWITCH,2065VU used on 001B, 001D, 001H, 001M		001
490A	D9259018203400		. . . HOUSING ASSY-SWITCH used on 480A		001
500A	D9259018400800		. . . . HOUSING-SWITCH used on 490A		001

- ITEM NOT ILLUSTRATED

FIG. ITEM	PART NUMBER	AIRLINE STOCK NUMBER	NOMENCLATURE 1234567	EFF CODE	UNITS PER ASSY
510A	D9259024203400		. . . . FOIL ASSY used on 490A		001
520A	D9259024223400		. . . . . FOIL used on 510A		001
530A	D9259018220200		. . . . . FILM-ADHESIVE used on 510A		001
540A	D9259023820600		. . . PCB-PRINTED CIRCUIT BOARD used on 480A		001
550A	NAS1100E04-5		. . . SCREW used on 480A		004
560A	DIN137A3B2C		. . . WASHER-SPRING BUY PN DIN137B3B2C used on 480A		004
570A	811215100		. . . SWITCH-BUTTON,SWITCH used on 480A		001
580A	800003511		. . . LENS-PROTECTIVE used on 480A		001
590A	726388-3		. . . PLUG used on 480A		002

- ITEM NOT ILLUSTRATED

THIS PAGE IS INTENTIONALLY LEFT BLANK

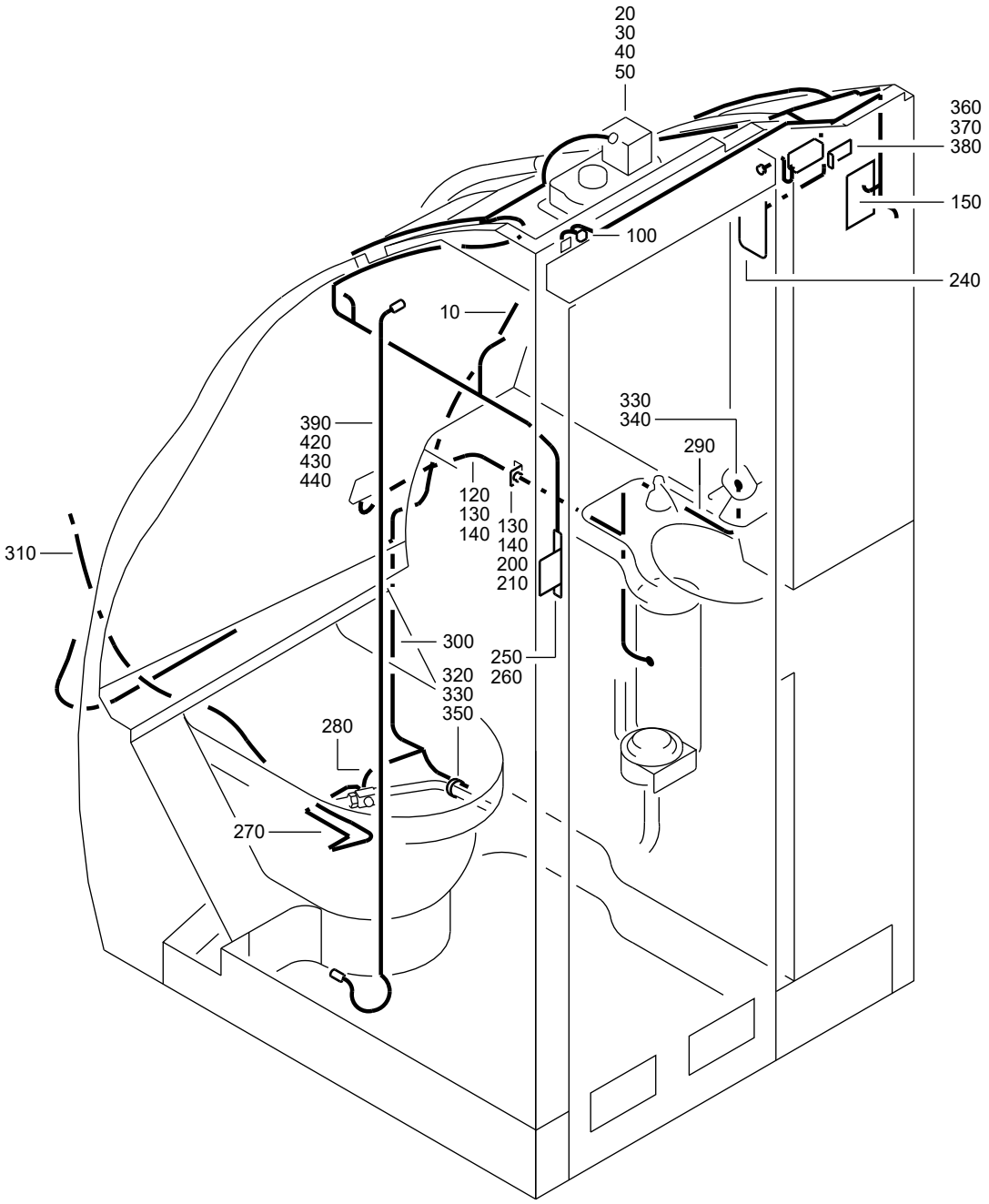

F_PL_254151_26_S_01_00

ELECTRICAL SYSTEM
Figure 26S/EN254151SHEET26S01

FIG. ITEM	PART NUMBER	AIRLINE STOCK NUMBER	NOMENCLATURE 1234567	EFF CODE	UNITS PER ASSY
26S					
-001A	D2549030409683		. ELECTRICAL SYSTEM NP used on 200B (25415142G), 200F (25415142K) SEE 25-41-51-42G FOR NHA SEE 25-41-51-42K FOR NHA		RF
010A	A292901307-000		. . HARNESS ASSY-CABLE used on 001A SEE 25-41-51-27D FOR DET		001
020A	PPC1200-00		. . DETECTOR-SMOKE used on 001A		001
030A	5L0064200100000		. . SEALING-SMOKE DETECTOR used on 001A		001
040A	NAS1100-08-8		. . SCREW used on 001A		004
050A	MS21042-08		. . NUT used on 001A		004
110A	F1000240-01		. . LIGHT-CALL used on 001A		001
120A	A292500300-200		. . BRACKET used on 001A		002
130A	NAS1096-2-4		. . SCREW BUY PN NAS1801-08-4 used on 001A		011
140A	NAS1149CN832R		. . WASHER used on 001A		020
150A	F1000270-00		. . LIGHT ASSY used on 001A		001

- ITEM NOT ILLUSTRATED

FIG. ITEM	PART NUMBER	AIRLINE STOCK NUMBER	NOMENCLATURE 1234567	EFF CODE	UNITS PER ASSY
200A	NSA935401-04		. . TIE-CABLE used on 001A		012
210A	NSA935504-01		. . BRACKET used on 001A		001
-220A	NSA935401-03		. . TIE-CABLE used on 001A		030
-230A	NSA935405-01		. . MOUNT used on 001A		025
240A	4913211082		. . LOUDSPEAKER used on 001A		001
250A	A392500305-000		. . MICROSWITCH used on 001A		001
260A	NAS514P832-7		. . SCREW used on 001A		002
270A	DCIN600-0510		. . STRAP-BONDING used on 001A		001
280A	DCIN600-0510		. . STRAP-BONDING used on 001A		001
290A	DCIN600-0510		. . STRAP-BONDING used on 001A		001
300A	DCIN600-1580		. . STRAP-BONDING used on 001A		001
310A	DCIN601-0620		. . STRAP-BONDING used on 001A		001
320A	NAS1096-3-16		. . SCREW BUY PN NAS1801-3-16 used on 001A		001
330A	ASNA0113-48ADL		. . WASHER used on 001A		002

- ITEM NOT ILLUSTRATED

FIG. ITEM	PART NUMBER	AIRLINE STOCK NUMBER	NOMENCLATURE 1234567	EFF CODE	UNITS PER ASSY
340A	MS21042-3		. . NUT used on 001A		001
350A	NSA5575-7		. . CLAMP used on 001A		001
360A	4056		. . INVERTER-MINI used on 001A		001
370A	NSA5527-03-01		. . SPACER used on 001A		004
380A	NAS1100-06-12		. . SCREW used on 001A		004
390A	A292901310-002		. . CABLE-CABIN ATTENDANT SEAT,AMI used on 001A		001
-400A	NSA938151PA2000		. . . CONTACT-PIN BUY PN EN3155-018M2018 used on 390A		026
-410A	NSA938152SA2000		. . . CONTACT-SOCKET BUY PN EN3155-019F2018 used on 390A		019
420A	E0052R14B19SNE		. . . CONNECTOR-PLUG used on 390A		001
430A	ABS0638B14		. . . BACKSHELL-CONNECTOR used on 390A		001
440A	ABS0364B26PC		. . . CONNECTOR-PLUG BUY PN ABS0364B26P used on 390A		001
-450A	ABS0364C		. . . BRACKET-CABLE used on 390A		001
-460A	ABS0364D		. . . CAP-PROTECTIVE used on 390A		001

- ITEM NOT ILLUSTRATED

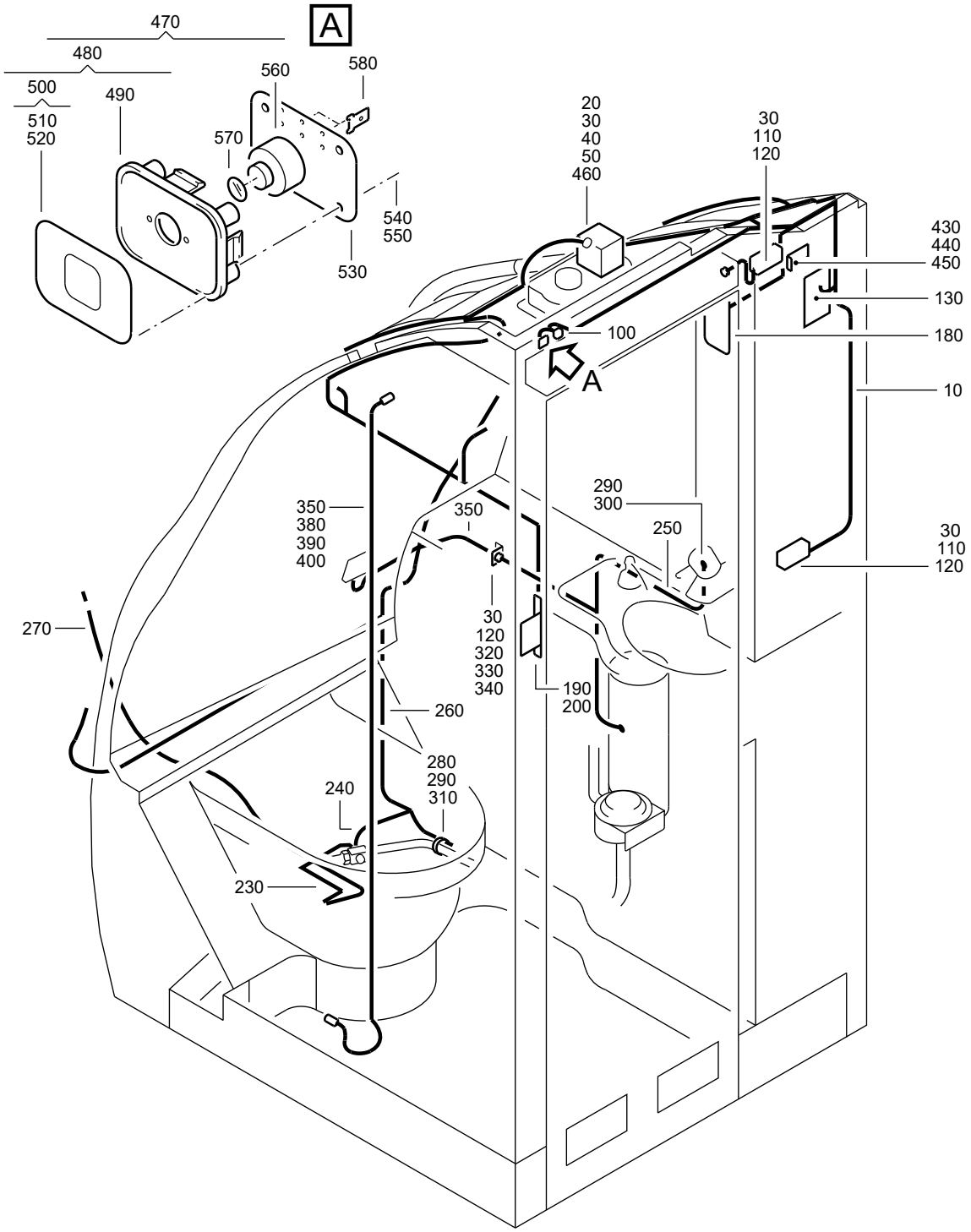

F_PL_254151_26_T_01_00

ELECTRICAL SYSTEM
Figure 26T/EN254151SHEET26T01

FIG. ITEM	PART NUMBER	AIRLINE STOCK NUMBER	NOMENCLATURE 1234567	EFF CODE	UNITS PER ASSY
26T					
-001A	D2549010400083		. ELECTRICAL SYSTEM NP used on 200E (25415142D) SEE 25-41-51-42D FOR NHA		RF
010A	A292901305-002		. . HARNESS ASSY-CABLE used on 001A SEE 25-41-51-27C FOR DET		001
020A	PPA1201-00		. . DETECTOR-SMOKE used on 001A		001
030A	NAS1149CN832R		. . WASHER used on 001A		016
040A	NAS1100-08-12		. . SCREW used on 001A		004
050A	5L0064200100000		. . SEALING-SMOKE DETECTOR used on 001A		001
100A	F1000240-01		. . LIGHT-CALL used on 001A		001
110A	A292500300-200		. . BRACKET used on 001A		002
120A	NAS1096-2-7		. . SCREW BUY PN NAS1801-08-7 used on 001A		016
130A	F1000270-00		. . LIGHT ASSY used on 001A		001
180A	4913211080		. . LOUDSPEAKER used on 001A		001
190A	A392500305-000		. . MICROSWITCH used on 001A		001

- ITEM NOT ILLUSTRATED

FIG. ITEM	PART NUMBER	AIRLINE STOCK NUMBER	NOMENCLATURE 1234567	EFF CODE	UNITS PER ASSY
200A	NAS514P832-7		. . SCREW used on 001A		002
-210A	NSA935401-03		. . TIE-CABLE used on 001A		050
-220A	NSA935405-01		. . MOUNT used on 001A		025
230A	DCIN600-0510		. . STRAP-BONDING used on 001A		001
240A	DCIN600-0510		. . STRAP-BONDING used on 001A		001
250A	DCIN600-0510		. . STRAP-BONDING used on 001A		001
260A	DCIN600-1580		. . STRAP-BONDING used on 001A		001
270A	DCIN601-0620		. . STRAP-BONDING used on 001A		001
280A	NAS1096-3-16		. . SCREW BUY PN NAS1801-3-16 used on 001A		001
290A	ASNA0113-48ADL		. . WASHER used on 001A		002
300A	MS21042-3		. . NUT used on 001A		001
310A	NSA5575-7		. . CLAMP used on 001A		001
320A	NAS1149CN432R		. . WASHER used on 001A		008
330A	NAS1100-04-6		. . SCREW used on 001A		004

- ITEM NOT ILLUSTRATED

FIG. ITEM	PART NUMBER	AIRLINE STOCK NUMBER	NOMENCLATURE 1234567	EFF CODE	UNITS PER ASSY
340A	MS21042-04		. . NUT used on 001A		008
350A	A292901310-000		. . CABLE-CABIN ATTENDANT SEAT,AMI used on 001A		001
-360A	NSA938151PA2000		. . . CONTACT-PIN BUY PN EN3155-018M2018 used on 350A		026
-370A	NSA938152SA2000		. . . CONTACT-SOCKET BUY PN EN3155-019F2018 used on 350A		019
380A	E0052R14B19SNE		. . . CONNECTOR-PLUG used on 350A		001
390A	ABS0638B14		. . . BACKSHELL-CONNECTOR used on 350A		001
400A	ABS0364B26PC		. . . CONNECTOR-PLUG BUY PN ABS0364B26P used on 350A		001
-410A	ABS0364C		. . . BRACKET-CABLE used on 350A		001
-420A	ABS0364D		. . . CAP-PROTECTIVE used on 350A		001
430A	4056		. . INVERTER-MINI used on 001A		001
440A	NSA5527-03-01		. . SPACER used on 001A		004
450A	NAS1100-06-12		. . SCREW used on 001A		004
460A	MS21042-08		. . NUT used on 001A		004

- ITEM NOT ILLUSTRATED

FIG. ITEM	PART NUMBER	AIRLINE STOCK NUMBER	NOMENCLATURE 1234567	EFF CODE	UNITS PER ASSY
470A	D9259036500200		. . PANEL-SWITCH,2065VU used on 001A		001
480A	D9259018203400		. . . HOUSING ASSY-SWITCH used on 470A		001
490A	D9259018400800		. . . . HOUSING-SWITCH used on 480A		001
500A	D9259024203400		. . . . FOIL ASSY used on 480A		001
510A	D9259024223400		. . . . . FOIL used on 500A		001
520A	D9259018220200		. . . . . FILM-ADHESIVE used on 500A		001
530A	D9259023820600		. . . PCB-PRINTED CIRCUIT BOARD used on 470A		001
540A	NAS1100E04-5		. . . SCREW used on 470A		004
550A	DIN137A3B2C		. . . WASHER-SPRING BUY PN DIN137B3B2C used on 470A		004
560A	811215100		. . . SWITCH-BUTTON,SWITCH used on 470A		001
570A	800003511		. . . LENS-PROTECTIVE used on 470A		001
580A	726388-3		. . . PLUG used on 470A		002

- ITEM NOT ILLUSTRATED

THIS PAGE IS INTENTIONALLY LEFT BLANK

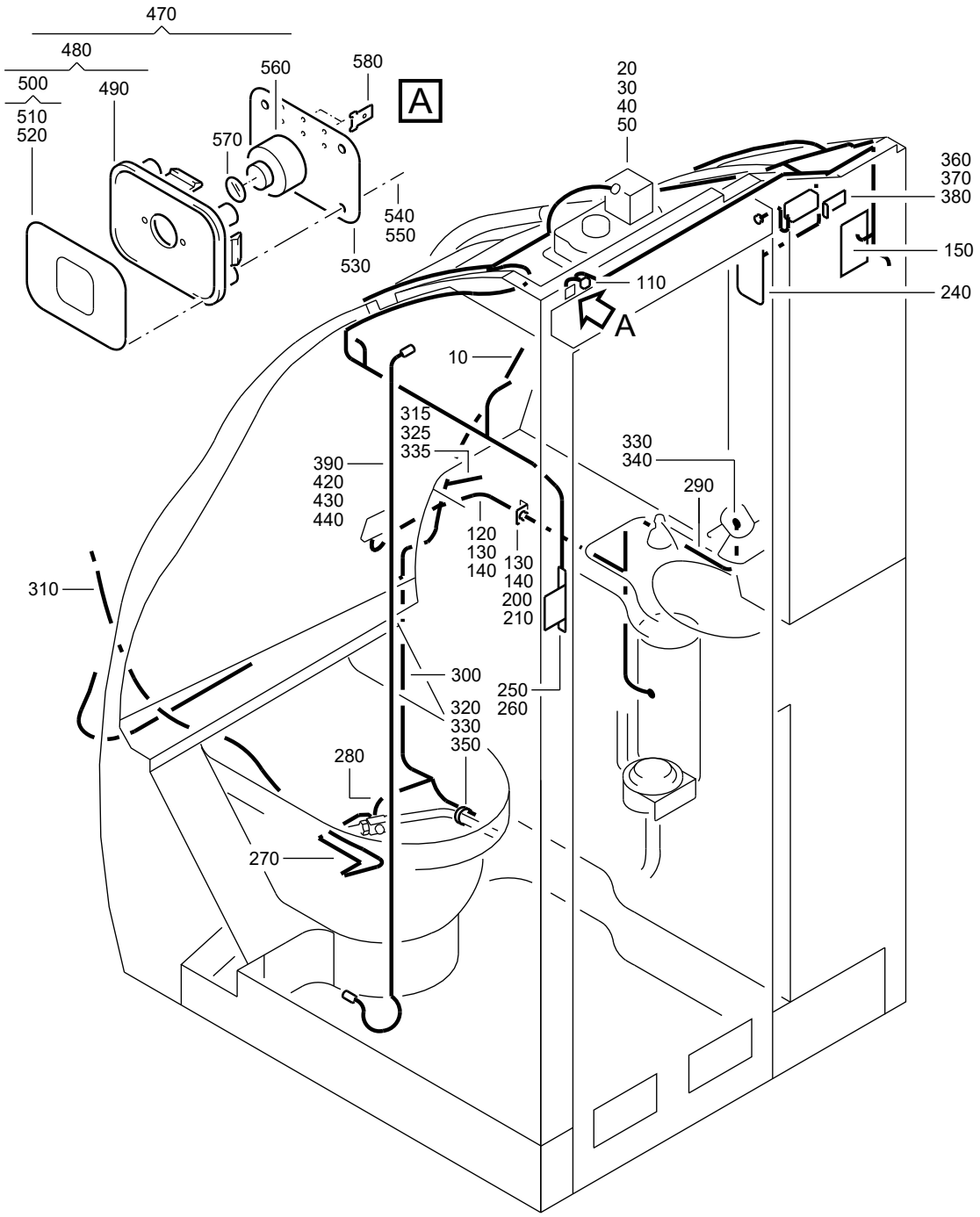

F_PL_254151_26_U_01_00

ELECTRICAL SYSTEM
Figure 26U/EN254151SHEET26U01

FIG. ITEM	PART NUMBER	AIRLINE STOCK NUMBER	NOMENCLATURE 1234567		EFF CODE	UNITS PER ASSY
26U						
-001A	D2549030414283		. ELECTRICAL SYSTEM used on 200D (25415142L), 200B (25415142M), 200D (25415142N), 200C (25415142P), 200C (25415142Q), 200A(25415142R), 200B (25415142S), 200C (25415142T), 200A(25415142U) SEE 25-41-51-42L FOR NHA SEE 25-41-51-42M FOR NHA SEE 25-41-51-42N FOR NHA SEE 25-41-51-42P FOR NHA SEE 25-41-51-42Q FOR NHA SEE 25-41-51-42R FOR NHA SEE 25-41-51-42S FOR NHA SEE 25-41-51-42T FOR NHA SEE 25-41-51-42U FOR NHA	NP		RF
-001B	D2549030413083		. ELECTRICAL SYSTEM used on 200D (25415142M), 200G (25415142N), 200E (25415142Q), 200D (25415142R), 200E (25415142S) SEE 25-41-51-42M FOR NHA SEE 25-41-51-42N FOR NHA SEE 25-41-51-42Q FOR NHA SEE 25-41-51-42R FOR NHA SEE 25-41-51-42S FOR NHA	NP		RF
-001C	D2549030700683		. ELECTRICAL SYSTEM used on 200B (25415142Q) SEE 25-41-51-42Q FOR NHA	NP		RF
-001D	D2549020414683		. ELECTRICAL SYSTEM used on 200A (25415142T) SEE 25-41-51-42T FOR NHA	NP		RF

- ITEM NOT ILLUSTRATED

FIG. ITEM	PART NUMBER	AIRLINE STOCK NUMBER	NOMENCLATURE 1234567	EFF CODE	UNITS PER ASSY
-001E	D2549020301683		. ELECTRICAL SYSTEM NP used on 200D (25415142U) SEE 25-41-51-42U FOR NHA		RF
-001F	D2549030703283		. ELECTRICAL SYSTEM NP used on 200E (25415142U) SEE 25-41-51-42U FOR NHA		RF
010A	A292901307-000		. . HARNESS ASSY-CABLE used on 001A, 001E SEE 25-41-51-27D FOR DET		001
-010B	A292901307-002		. . HARNESS ASSY-CABLE used on 001B SEE 25-41-51-27D FOR DET		001
-010C	A292901307-006		. . HARNESS ASSY-CABLE used on 001C SEE 25-41-51-27D FOR DET		001
-010D	A292901307-008		. . HARNESS ASSY-CABLE used on 001D, 001F SEE 25-41-51-27D FOR DET		001
020A	PPC1200-00		. . DETECTOR-SMOKE used on 001A, 001B, 001C, 001D, 001E, 001F		001
030A	5L0064200100000		. . SEALING-SMOKE DETECTOR used on 001A, 001B, 001C, 001D, 001E, 001F		001
040A	NAS1100-08-8		. . SCREW used on 001A, 001B, 001C, 001D, 001E, 001F		004
050A	MS21042-08		. . NUT used on 001A, 001B, 001C, 001D, 001E, 001F		004

- ITEM NOT ILLUSTRATED

FIG. ITEM	PART NUMBER	AIRLINE STOCK NUMBER	NOMENCLATURE 1234567	EFF CODE	UNITS PER ASSY
110A	F1000240-01		. . LIGHT-CALL used on 001A, 001B, 001C, 001D, 001E, 001F		001
120A	A292500300-200		. . BRACKET used on 001A, 001B, 001C, 001D, 001E, 001F		001
130A	NAS1096-2-4		. . SCREW BUY PN NAS1801-08-4 used on 001A, 001B, 001C, 001D, 001E, 001F		011
140A	NAS1149CN832R		. . WASHER used on 001A, 001B, 001C, 001D, 001E, 001F		020
150A	F1000270-00		. . LIGHT ASSY used on 001A, 001B, 001C, 001D, 001E, 001F		001
-200A	NSA935401-04		. . TIE-CABLE used on 001A, 001B, 001C, 001D, 001E, 001F		012
210A	NSA935504-01		. . BRACKET used on 001A, 001B, 001C, 001D		002
220A	NSA935401-03		. . TIE-CABLE used on 001A, 001B, 001C, 001D, 001E, 001F		030
-230A	NSA935405-01		. . MOUNT used on 001A, 001B, 001C, 001D, 001E, 001F		025
240A	4913211082		. . LOUDSPEAKER used on 001A, 001B, 001C, 001D		001

- ITEM NOT ILLUSTRATED

FIG. ITEM	PART NUMBER	AIRLINE STOCK NUMBER	NOMENCLATURE 1234567	EFF CODE	UNITS PER ASSY
-240B	4913211080		. . LOUDSPEAKER used on 001E, 001F		001
250A	A392500305-000		. . MICROSWITCH used on 001A, 001B, 001C, 001D, 001E, 001F		001
260A	NAS514P832-7		. . SCREW used on 001A, 001B, 001C, 001D, 001E, 001F		002
270A	DCIN600-0510		. . STRAP-BONDING used on 001A, 001B, 001C, 001D, 001E, 001F		001
280A	DCIN600-0510		. . STRAP-BONDING used on 001A, 001B, 001C, 001D, 001E, 001F		001
290A	DCIN600-0510		. . STRAP-BONDING used on 001A, 001B, 001C, 001D, 001E, 001F		001
300A	DCIN600-1580		. . STRAP-BONDING used on 001A, 001B, 001C, 001D, 001E, 001F		001
310A	DCIN601-0620		. . STRAP-BONDING used on 001A, 001B, 001C, 001D, 001E, 001F		001
315A	DCIN600-0650		. . STRAP-BONDING used on 001C		002
320A	NAS1096-3-16		. . SCREW BUY PN NAS1801-3-16 used on 001A, 001B, 001C, 001D, 001E, 001F		001

- ITEM NOT ILLUSTRATED

FIG. ITEM	PART NUMBER	AIRLINE STOCK NUMBER	NOMENCLATURE 1234567	EFF CODE	UNITS PER ASSY
325A	NAS1096-2-7		. . SCREW BUY PN NAS1801-08-7 used on 001C		002
330A	ASNA0113-48ADL		. . WASHER used on 001A, 001B, 001C, 001D, 001E, 001F		002
335A	NAS1149CN832R		. . WASHER used on 001C		002
340A	MS21042-3		. . NUT used on 001A, 001B, 001C, 001D, 001E, 001F		001
350A	NSA5575-7		. . CLAMP used on 001A, 001B, 001C, 001D, 001E, 001F		001
360A	4056		. . INVERTER-MINI used on 001A, 001B, 001C, 001D, 001E, 001F		001
370A	NSA5527-03-01		. . SPACER used on 001A, 001B, 001C, 001D, 001E, 001F		004
380A	NAS1100-06-12		. . SCREW used on 001A, 001B, 001C, 001D, 001E, 001F		004
390A	A292901310-002		. . CABLE-CABIN ATTENDANT SEAT,AMI used on 001A, 001B, 001C, 001D, 001E, 001F		001
-400A	NSA938151PA2000		. . . CONTACT-PIN BUY PN EN3155-018M2018 used on 390A		026

- ITEM NOT ILLUSTRATED

FIG. ITEM	PART NUMBER	AIRLINE STOCK NUMBER	NOMENCLATURE 1234567	EFF CODE	UNITS PER ASSY
-410A	NSA938152SA2000		. . . CONTACT-SOCKET BUY PN EN3155-019F2018 used on 390A		019
420A	E0052R14B19SNE		. . . CONNECTOR-PLUG used on 390A		001
430A	ABS0638B14		. . . BACKSHELL-CONNECTOR used on 390A		001
440A	ABS0364B26PC		. . . CONNECTOR-PLUG BUY PN ABS0364B26P used on 390A		001
-450A	ABS0364C		. . . BRACKET-CABLE used on 390A		001
-460A	ABS0364D		. . . CAP-PROTECTIVE used on 390A		001
470A	D9259036500200		. . PANEL-SWITCH,2065VU used on 001F		001
480A	D9259018203400		. . . HOUSING ASSY-SWITCH used on 470A		001
490A	D9259018400800		. . . . HOUSING-SWITCH used on 480A		001
500A	D9259024203400		. . . . FOIL ASSY used on 480A		001
510A	D9259024223400		. . . . . FOIL used on 500A		001
520A	D9259018220200		. . . . . FILM-ADHESIVE used on 500A		001
530A	D9259023820600		. . . PCB-PRINTED CIRCUIT BOARD used on 470A		001

- ITEM NOT ILLUSTRATED

FIG. ITEM	PART NUMBER	AIRLINE STOCK NUMBER	NOMENCLATURE 1234567	EFF CODE	UNITS PER ASSY
540A	NAS1100E04-5		. . . SCREW used on 470A		004
550A	DIN137A3B2C		. . . WASHER-SPRING BUY PN DIN137B3B2C used on 470A		004
560A	811215100		. . . SWITCH-BUTTON,SWITCH used on 470A		001
570A	800003511		. . . LENS-PROTECTIVE used on 470A		001
580A	726388-3		. . . PLUG used on 470A		002

- ITEM NOT ILLUSTRATED

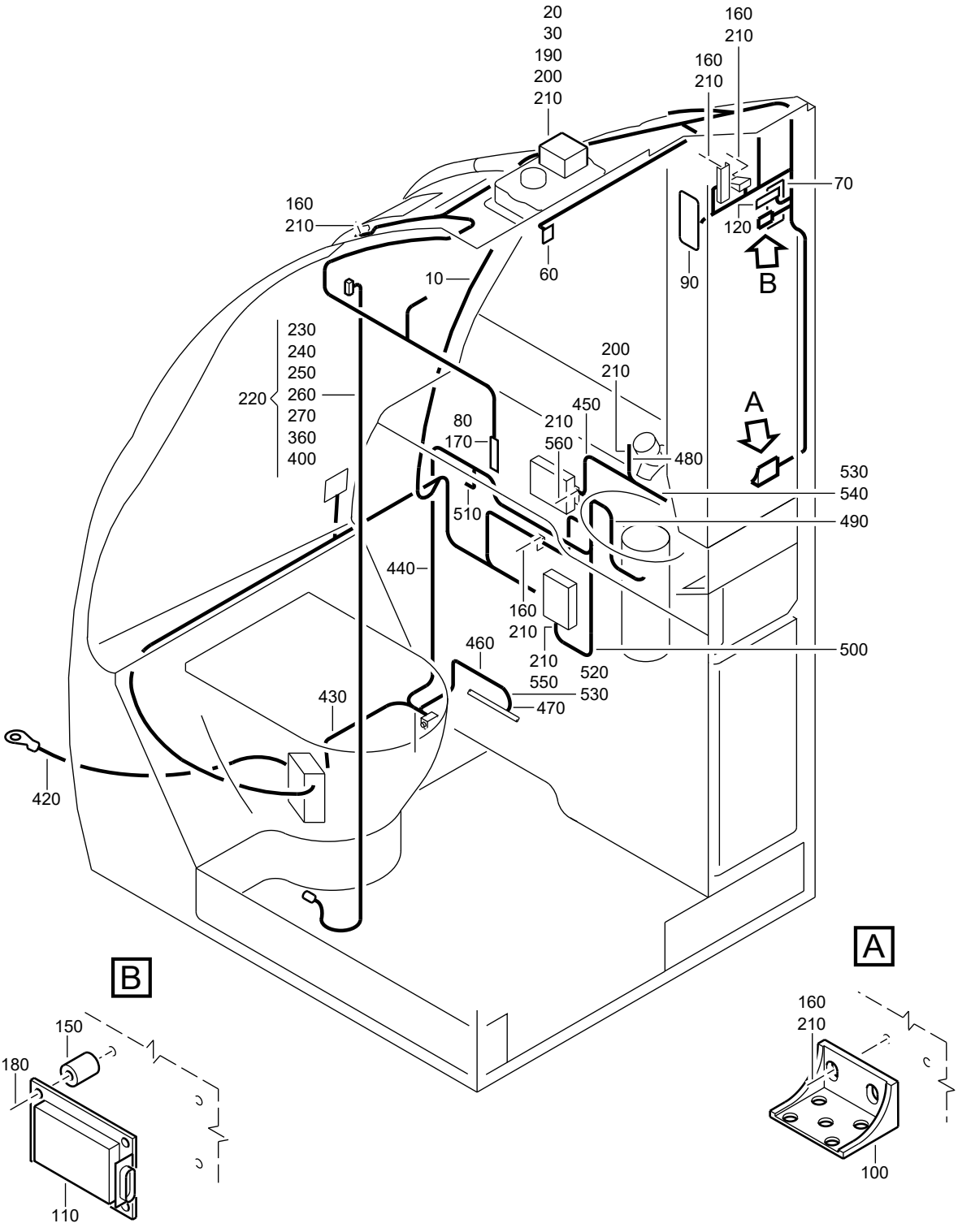

F_PL_254151_26_V_01_00

ELECTRICAL SYSTEM
Figure 26V/EN254151SHEET26V01

FIG. ITEM	PART NUMBER	AIRLINE STOCK NUMBER	NOMENCLATURE 1234567	EFF CODE	UNITS PER ASSY
26V					
-001A	D2547161202883		. ELECTRICAL SYSTEM NP POST SB 25-1674 used on 200H (25415141M), 200H (25415142N) SEE 25-41-51-41M FOR NHA SEE 25-41-51-42N FOR NHA		RF
010A	A292901307-006		. . HARNESS ASSY-CABLE used on 001A		001
020A	PPC1200-00		. . DETECTOR-SMOKE POST SB 25-1674 used on 001A		001
030A	5L0064200100000		. . SEALING-SMOKE DETECTOR used on 001A		001
-040A	E0718-01		. . TUBING-HEAT-SHRINKABLE USE AS REQUIRED POST SB 25-1674 used on 001A		AR
-050A	E0718-02		. . TUBING-HEAT-SHRINKABLE USE AS REQUIRED POST SB 25-1674 used on 001A		AR
060A	F1000240-01		. . LIGHT-CALL used on 001A		001
070A	F1000270-00		. . LIGHT ASSY used on 001A		001
080A	A392500305-000		. . MICROSWITCH used on 001A		001
090A	4913211080		. . LOUDSPEAKER used on 001A		001

- ITEM NOT ILLUSTRATED

FIG. ITEM	PART NUMBER	AIRLINE STOCK NUMBER	NOMENCLATURE 1234567	EFF CODE	UNITS PER ASSY
100A	A292500300-200		. . BRACKET used on 001A		001
110A	4056		. . INVERTER-MINI used on 001A		001
120A	0-112-002400000		. . PROFILE-SEALING USE AS REQUIRED POST SB 25-1674 used on 001A		AR
-130A	NSA935401-03		. . TIE-CABLE POST SB 25-1674 used on 001A		070
-140A	NSA935405-01		. . MOUNT POST SB 25-1674 used on 001A		065
150A	NSA5527-03-01		. . SPACER POST SB 25-1674 used on 001A		004
160A	NAS1801-08-4		. . SCREW POST SB 25-1674 used on 001A		010
170A	NAS514P832-7		. . SCREW POST SB 25-1674 used on 001A		002
180A	NAS1100-06-12		. . SCREW POST SB 25-1674 used on 001A		004
190A	NAS6604-2		. . BOLT POST SB 25-1674 used on 001A		004

- ITEM NOT ILLUSTRATED

FIG. ITEM	PART NUMBER	AIRLINE STOCK NUMBER	NOMENCLATURE 1234567	EFF CODE	UNITS PER ASSY
200A	MS21042-08		. . NUT POST SB 25-1674 used on 001A		005
210A	NAS1149CN832R		. . WASHER POST SB 25-1674 used on 001A		017
220A	A292901310-002		. . CABLE-CABIN ATTENDANT SEAT,AMI POST SB 25-1674 used on 001A		001
230A	E0052R14B19SNE		. . . CONNECTOR-PLUG used on 220A		001
240A	ABS0638B14		. . . BACKSHELL-CONNECTOR used on 220A		001
250A	ABS0364B26PC		. . . CONNECTOR-PLUG BUY PN ABS0364B26P used on 220A		001
260A	ABS0364C		. . . BRACKET-CABLE used on 220A		001
270A	ABS0364D		. . . CAP-PROTECTIVE used on 220A		001
-280A	NSA938151PA2000		. . . CONTACT-PIN BUY PN EN3155-018M2018 used on 220A		026
-290A	NSA938152SA2000		. . . CONTACT-SOCKET BUY PN EN3155-019F2018 used on 220A		019
-300A	NSA935805-09		. . . ELECTRICAL CONDUIT USE AS REQUIRED used on 220A		AR

- ITEM NOT ILLUSTRATED

FIG. ITEM	PART NUMBER	AIRLINE STOCK NUMBER	NOMENCLATURE 1234567	EFF CODE	UNITS PER ASSY
-310A	E0126-05B		. . . TUBING-HEAT-SHRINKABLE USE AS REQUIRED used on 220A		AR
-320A	E0261CF20U		. . . CABLE USE AS REQUIRED BUY PN EN2267-010A006S used on 220A		AR
-330A	E0261CF22U		. . . CABLE USE AS REQUIRED BUY PN EN2267-010A004S used on 220A		AR
-340A	E0272TK24U		. . . CABLE USE AS REQUIRED used on 220A		AR
-350A	E0264PF24		. . . CABLE USE AS REQUIRED BUY PN EN2267-009B002P used on 220A		AR
360A	E0616BB2000		. . . PLUG used on 220A		025
-370A	NSA935401-03		. . . TIE-CABLE used on 220A		004
-380A	NSA935401-04		. . . TIE-CABLE used on 220A		002
-390A	ABS0237-02		. . . SLEEVE-SOLDER used on 220A		002
400A	E0248A2-4H9		. . . LABEL used on 220A		002
-410A	TMS3-4-10-9		. . . SLEEVE-IDENTIFICATION used on 220A		001

- ITEM NOT ILLUSTRATED

FIG. ITEM	PART NUMBER	AIRLINE STOCK NUMBER	NOMENCLATURE 1234567	EFF CODE	UNITS PER ASSY
-415A	TMS1-8-10-9		. . . SLEEVE-IDENTIFICATION used on 220A		006
420A	DCIN603-1000		. . STRAP-BONDING POST SB 25-1674 used on 001A		001
430A	DCIN600-0510		. . STRAP-BONDING used on 001A		001
440A	DCIN600-1000		. . STRAP-BONDING POST SB 25-1674 used on 001A		001
450A	DCIN600-0270		. . STRAP-BONDING POST SB 25-1674 used on 001A		001
460A	DCIN600-0510		. . STRAP-BONDING used on 001A		001
470A	NSA5575-7		. . CLAMP used on 001A		001
480A	DCIN600-0130		. . STRAP-BONDING POST SB 25-1674 used on 001A		001
490A	DCIN600-0360		. . STRAP-BONDING POST SB 25-1674 used on 001A		001
500A	DCIN600-0700		. . STRAP-BONDING POST SB 25-1674 used on 001A		001
510A	DCIN600-0950		. . STRAP-BONDING POST SB 25-1674 used on 001A		001

- ITEM NOT ILLUSTRATED

FIG. ITEM	PART NUMBER	AIRLINE STOCK NUMBER	NOMENCLATURE 1234567	EFF CODE	UNITS PER ASSY
520A	NAS1801-3-16		. . SCREW used on 001A		001
530A	ASNA0113-48ADL		. . WASHER used on 001A		002
540A	MS21042-3		. . NUT used on 001A		001
550A	NAS1801-08-5		. . SCREW POST SB 25-1674 used on 001A		001
560A	NAS1801-08-6		. . SCREW POST SB 25-1674 used on 001A		001

- ITEM NOT ILLUSTRATED

THIS PAGE IS INTENTIONALLY LEFT BLANK

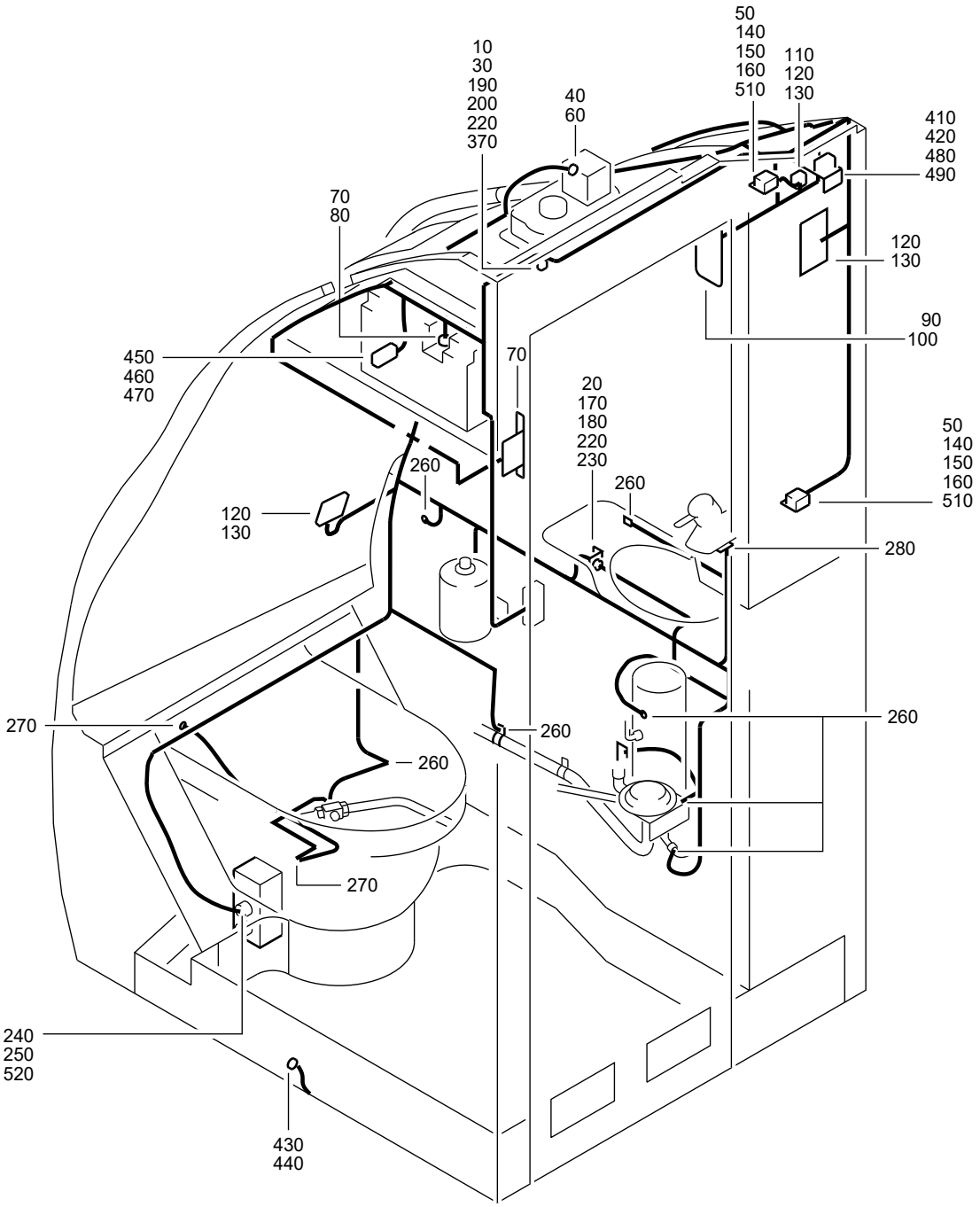

F_PL_254151_27_0_01_00

HARNESS-CABLE
Figure 27/EN254151SHEET27001

FIG. ITEM	PART NUMBER	AIRLINE STOCK NUMBER	NOMENCLATURE 1234567	EFF CODE	UNITS PER ASSY
27					
-001A	A292901200-000		. HARNESS-CABLE NP used on 010A (254151260), 010F (25415126A) SEE 25-41-51-260 FOR NHA SEE 25-41-51-26A FOR NHA		RF
-001B	A292901200-004		. HARNESS-CABLE NP used on 010A (25415126A) SEE 25-41-51-26A FOR NHA		RF
-001C	A292901200-006		. HARNESS-CABLE NP used on 010B (254151260) SEE 25-41-51-260 FOR NHA		RF
-001D	A292901200-010		. HARNESS-CABLE NP used on 010C (254151260), 010A (25415126B) SEE 25-41-51-260 FOR NHA SEE 25-41-51-26B FOR NHA		RF
-001E	A292901200-012		. HARNESS-CABLE NP used on 010D (254151260) SEE 25-41-51-260 FOR NHA		RF
-001F	A292901200-008		. HARNESS-CABLE NP used on 010H (254151260), 010B (25415126A) SEE 25-41-51-260 FOR NHA SEE 25-41-51-26A FOR NHA		RF
-001G	A292901201-002		. HARNESS ASSY-CABLE NP used on 010F (254151260), 010B (25415126B) SEE 25-41-51-260 FOR NHA SEE 25-41-51-26B FOR NHA		RF
-001H	A292901201-000		. HARNESS ASSY-CABLE NP used on 010C (25415126A) SEE 25-41-51-26A FOR NHA		RF

- ITEM NOT ILLUSTRATED

FIG. ITEM	PART NUMBER	AIRLINE STOCK NUMBER	NOMENCLATURE 1234567	EFF CODE	UNITS PER ASSY
-001J	A292901201-004		. HARNESS ASSY-CABLE NP used on 010E (254151260), 010D (25415126A) SEE 25-41-51-260 FOR NHA SEE 25-41-51-26A FOR NHA		RF
-001K	A292901201-006		. HARNESS ASSY-CABLE NP used on 010G (254151260) SEE 25-41-51-260 FOR NHA		RF
-001L	A292901201-008		. HARNESS ASSY-CABLE NP used on 010E (25415126A) SEE 25-41-51-26A FOR NHA		RF
010A	E0053R22B55PNE		. . CONNECTOR-RECEPTACLE used on 001A, 001B, 001C, 001D, 001E, 001F, 001G, 001H, 001J, 001K, 001L		001
020A	NAS1102-04-6		. . SCREW used on 001A, 001B, 001C, 001D, 001E, 001F, 001G, 001H, 001J, 001K, 001L		002
030A	ABS0638C22		. . BACKSHELL-CONNECTOR used on 001A, 001B, 001C, 001D, 001E, 001F, 001G, 001H, 001J, 001K, 001L		001
040A	E0052R12B10SNE		. . CONNECTOR-PLUG used on 001A, 001B, 001C, 001D, 001E, 001F, 001G, 001H, 001J, 001K, 001L		001
050A	NSA938152SA2000		. . CONTACT-SOCKET BUY PN EN3155-019F2018 used on 001A, 001B, 001C, 001D, 001E, 001F, 001G, 001H, 001J, 001K, 001L		010

- ITEM NOT ILLUSTRATED

FIG. ITEM	PART NUMBER	AIRLINE STOCK NUMBER	NOMENCLATURE 1234567	EFF CODE	UNITS PER ASSY
060A	ABS0638A12		. . BACKSHELL-CONNECTOR used on 001A, 001B, 001C, 001D, 001E, 001F, 001G, 001H, 001J, 001K, 001L		001
070A	NSA936830-20		. . SPLICE used on 001A, 001B, 001C, 001D, 001E, 001F, 001G, 001H, 001J, 001K, 001L		004
080A	NSA937910EA2000		. . CONTACT-PIN used on 001A, 001B, 001C, 001D, 001E, 001F, 001G, 001H, 001J, 001K, 001L		004
090A	DAN387-01		. . TERMINAL-CABLE used on 001A, 001B, 001C, 001D, 001E, 001F, 001G, 001H, 001J, 001K, 001L		002
100A	DAN387-02		. . INSULATION used on 001A, 001B, 001C, 001D, 001E, 001F, 001G, 001H, 001J, 001K, 001L		002
110A	320559		. . SPLICE used on 001A, 001B, 001C, 001D, 001E, 001F, 001G, 001H, 001J, 001K, 001L		003
120A	170324-2		. . TERMINAL-CABLE used on 001A, 001B, 001C, 001D, 001E, 001F, 001G, 001H, 001J, 001K, 001L		008
130A	928083-1		. . HOUSING used on 001A, 001B, 001C, 001D, 001E, 001F, 001G, 001H, 001J, 001K, 001L		008

- ITEM NOT ILLUSTRATED

FIG. ITEM	PART NUMBER	AIRLINE STOCK NUMBER	NOMENCLATURE 1234567	EFF CODE	UNITS PER ASSY
140A	ABS0364A10S		. . CONNECTOR-RECEPTACLE used on 001A, 001B, 001C, 001D, 001E, 001F, 001G, 001H, 001J, 001K, 001L		002
150A	ABS0364C		. . BRACKET-CABLE used on 001A, 001B, 001C, 001D, 001E, 001F, 001G, 001H, 001J, 001K, 001L		002
160A	ABS0364D		. . CAP-PROTECTIVE used on 001A, 001B, 001C, 001D, 001E, 001F, 001G, 001H, 001J, 001K, 001L		002
170A	E0053R10B6SNE		. . CONNECTOR-RECEPTACLE used on 001A, 001B, 001C, 001D, 001E, 001F, 001G, 001H, 001J, 001K, 001L		001
180A	ABS0638C10		. . BACKSHELL-CONNECTOR used on 001A, 001B, 001C, 001D, 001E, 001F, 001G, 001H, 001J, 001K, 001L		001
190A	A292500300-204		. . BRACKET used on 001A, 001B, 001C, 001D, 001E, 001F, 001G, 001H, 001J, 001K, 001L		001
200A	NAS1100-04-5		. . SCREW used on 001A, 001B, 001C, 001D, 001E, 001F, 001G, 001H, 001J, 001K, 001L		002
-210A	E0261CF10		. . CABLE USE AS REQUIRED used on 001A, 001B, 001C		AR

- ITEM NOT ILLUSTRATED

FIG. ITEM	PART NUMBER	AIRLINE STOCK NUMBER	NOMENCLATURE 1234567	EFF CODE	UNITS PER ASSY
220A	MS21042-04		. . NUT used on 001A, 001B, 001C, 001D, 001E, 001F, 001G, 001H, 001J, 001K, 001L		004
230A	A292500300-202		. . BRACKET used on 001A, 001B, 001C, 001D, 001E, 001F, 001G, 001H, 001J, 001K, 001L		001
240A	E0052R14B12SNE		. . CONNECTOR-PLUG used on 001A, 001B, 001C, 001D, 001E, 001F, 001G, 001H, 001J, 001K, 001L		001
250A	ABS0638A14		. . BACKSHELL-CONNECTOR used on 001A, 001B, 001C, 001D, 001E, 001F, 001G, 001H, 001J, 001K, 001L		001
260A	NSA936501TA1004		. . TERMINAL-PRE-INSULATED used on 001A, 001B, 001C		010
270A	NSA936504TC0805		. . TERMINAL-CABLE used on 001A, 001B, 001C		002
280A	NSA936501TA1005		. . TERMINAL-PRE-INSULATED used on 001A, 001B, 001C		002
-290A	E0248A2-4H9		. . LABEL USE AS REQUIRED used on 001A, 001B, 001C, 001D, 001E, 001F, 001G, 001H, 001J, 001K, 001L		AR

- ITEM NOT ILLUSTRATED

FIG. ITEM	PART NUMBER	AIRLINE STOCK NUMBER	NOMENCLATURE 1234567	EFF CODE	UNITS PER ASSY
-300A	NSA935805-04		. . ELECTRICAL CONDUIT USE AS REQUIRED REQUIRED LENGTH 2000 MM used on 001A, 001B, 001C, 001D, 001E, 001F, 001G, 001H, 001J, 001K, 001L		AR
-310A	NSA935805-06		. . ELECTRICAL CONDUIT USE AS REQUIRED REQUIRED LENGTH 3500 MM used on 001A, 001B, 001C, 001D, 001E, 001F, 001G, 001H, 001J, 001K, 001L		AR
-320A	NSA935805-09		. . ELECTRICAL CONDUIT USE AS REQUIRED REQUIRED LENGTH 3000 MM used on 001A, 001B, 001C, 001D, 001E, 001F, 001G, 001H, 001J, 001K, 001L		AR
-330A	NSA935805-12		. . ELECTRICAL CONDUIT USE AS REQUIRED REQUIRED LENGTH 1000 MM used on 001A, 001B, 001C, 001D, 001E, 001F, 001G, 001H, 001J, 001K, 001L		AR
-340A	RNF100-1-8-9		. . TUBING-HEAT-SHRINKABLE USE AS REQUIRED REQUIRED LENGTH 2500 MM used on 001A, 001B, 001C, 001D, 001E, 001F, 001G, 001H, 001J, 001K, 001L		AR

- ITEM NOT ILLUSTRATED

FIG. ITEM	PART NUMBER	AIRLINE STOCK NUMBER	NOMENCLATURE 1234567	EFF CODE	UNITS PER ASSY
-350A	TSTMNR502-0		. . CONDUIT USE AS REQUIRED REQUIRED LENGTH 2000 MM used on 001A, 001B, 001C, 001D, 001E, 001F, 001G, 001H, 001J, 001K, 001L		AR
-360A	E0126-05B		. . TUBING-HEAT-SHRINKABLE USE AS REQUIRED REQUIRED LENGTH 5000 MM used on 001A, 001B, 001C, 001D, 001E, 001F, 001G, 001H, 001J, 001K, 001L		AR
370A	NSA937201ME0400		. . SLEEVE-IDENTIFICATION USE AS REQUIRED used on 001A, 001B, 001C, 001D, 001E, 001F, 001G, 001H, 001J, 001K, 001L		AR
-380A	NSA937790-00		. . SLEEVE-SHRINKABLE USE AS REQUIRED used on 001A, 001B, 001C, 001D, 001E, 001F, 001G, 001H, 001J, 001K, 001L		AR
-390A	NSA935401-03		. . TIE-CABLE used on 001A, 001B, 001C, 001D, 001E, 001F, 001G, 001H, 001J, 001K, 001L		050
-400A	811215100		. . SWITCH-BUTTON,SWITCH used on 001C, 001E, 001J		001
410A	MS27212-1-5		. . BOARD ASSY-TERMINAL used on 001A, 001B, 001C, 001D, 001E, 001F, 001G, 001H, 001J, 001K, 001L		001

- ITEM NOT ILLUSTRATED

FIG. ITEM	PART NUMBER	AIRLINE STOCK NUMBER	NOMENCLATURE 1234567	EFF CODE	UNITS PER ASSY
420A	MS18029-1S5		. . COVER ASSY used on 001A, 001B, 001C, 001D, 001E, 001F, 001G, 001H, 001J, 001K, 001L		001
430A	E0052R14B19SNE		. . CONNECTOR-PLUG used on 001A, 001B, 001C, 001D, 001E, 001F, 001G, 001H, 001J, 001K, 001L		001
440A	ABS0638B14		. . BACKSHELL-CONNECTOR used on 001A, 001B, 001C, 001D, 001E, 001F, 001G, 001H, 001J, 001K, 001L		001
450A	ABS0364B26P		. . CONNECTOR-PLUG used on 001A, 001B, 001C, 001D, 001E, 001F, 001G, 001H, 001J, 001K		001
-450B	ABS0364B26PC		. . CONNECTOR-PLUG BUY PN ABS0364B26P used on 001L		001
460A	ABS0364C		. . BRACKET-CABLE used on 001A, 001B, 001C, 001D, 001E, 001F, 001G, 001H, 001J, 001K, 001L		001
470A	ABS0364D		. . CAP-PROTECTIVE used on 001A, 001B, 001C, 001D, 001E, 001F, 001G, 001H, 001J, 001K, 001L		001
480A	NSA936501TA2003		. . TERMINAL-PRE-INSULATED used on 001A, 001B, 001C, 001D, 001E, 001F, 001G, 001H, 001J, 001K, 001L		006

- ITEM NOT ILLUSTRATED

FIG. ITEM	PART NUMBER	AIRLINE STOCK NUMBER	NOMENCLATURE 1234567	EFF CODE	UNITS PER ASSY
490A	NSA936501TA2204		. . TERMINAL-PRE-INSULATED used on 001A, 001B, 001C, 001D, 001E, 001F, 001G, 001H, 001J, 001K, 001L		002
-500A	E0262DK8		. . CABLE USE AS REQUIRED BUY PN EN2267-008A090P used on 001A, 001B, 001C		AR
510A	E0616BB2000		. . PLUG used on 001A, 001B, 001C, 001D, 001E, 001F, 001G, 001H, 001J, 001K		020
-510B	E0052R8B33SNE		. . CONNECTOR-PLUG used on 001L		020
520A	E0616BB1600		. . PLUG used on 001A, 001B, 001C, 001D, 001E, 001F, 001G, 001H, 001J, 001K		001
-520B	ABS0638B08		. . BACKSHELL-CONNECTOR used on 001L		001
-530A	NSA938151PA2000		. . CONTACT-PIN BUY PN EN3155-018M2018 used on 001A, 001B, 001C, 001D, 001E, 001F, 001G, 001H, 001J, 001K, 001L		075
-540A	E0261CF10		. . CABLE USE AS REQUIRED used on 001A, 001B, 001C		AR
-550A	E0262DK8		. . CABLE USE AS REQUIRED BUY PN EN2267-008A090P used on 001A, 001B, 001C		AR

- ITEM NOT ILLUSTRATED

FIG. ITEM	PART NUMBER	AIRLINE STOCK NUMBER	NOMENCLATURE 1234567	EFF CODE	UNITS PER ASSY
-560A	E0274UD22		. . CABLE USE AS REQUIRED used on 001A, 001B, 001C, 001D, 001E, 001F		AR
-570A	E0261CF20		. . CABLE USE AS REQUIRED BUY PN EN2267-010A006S used on 001A, 001B, 001C, 001D, 001E, 001F, 001G, 001H, 001J, 001K, 001L		AR
-580A	E0261CF18		. . CABLE USE AS REQUIRED BUY PN EN2267-010A010S used on 001A, 001B, 001C, 001D, 001E, 001F, 001G, 001H, 001J, 001K, 001L		AR
-590A	E0261CF22		. . CABLE USE AS REQUIRED BUY PN EN2267-010A004S used on 001A, 001B, 001C, 001D, 001E, 001F, 001G, 001H, 001J, 001K, 001L		AR
-600A	E0272TK22		. . CABLE USE AS REQUIRED used on 001A, 001B, 001C, 001D, 001E, 001F, 001G, 001H, 001J, 001K, 001L		AR

- ITEM NOT ILLUSTRATED

THIS PAGE IS INTENTIONALLY LEFT BLANK

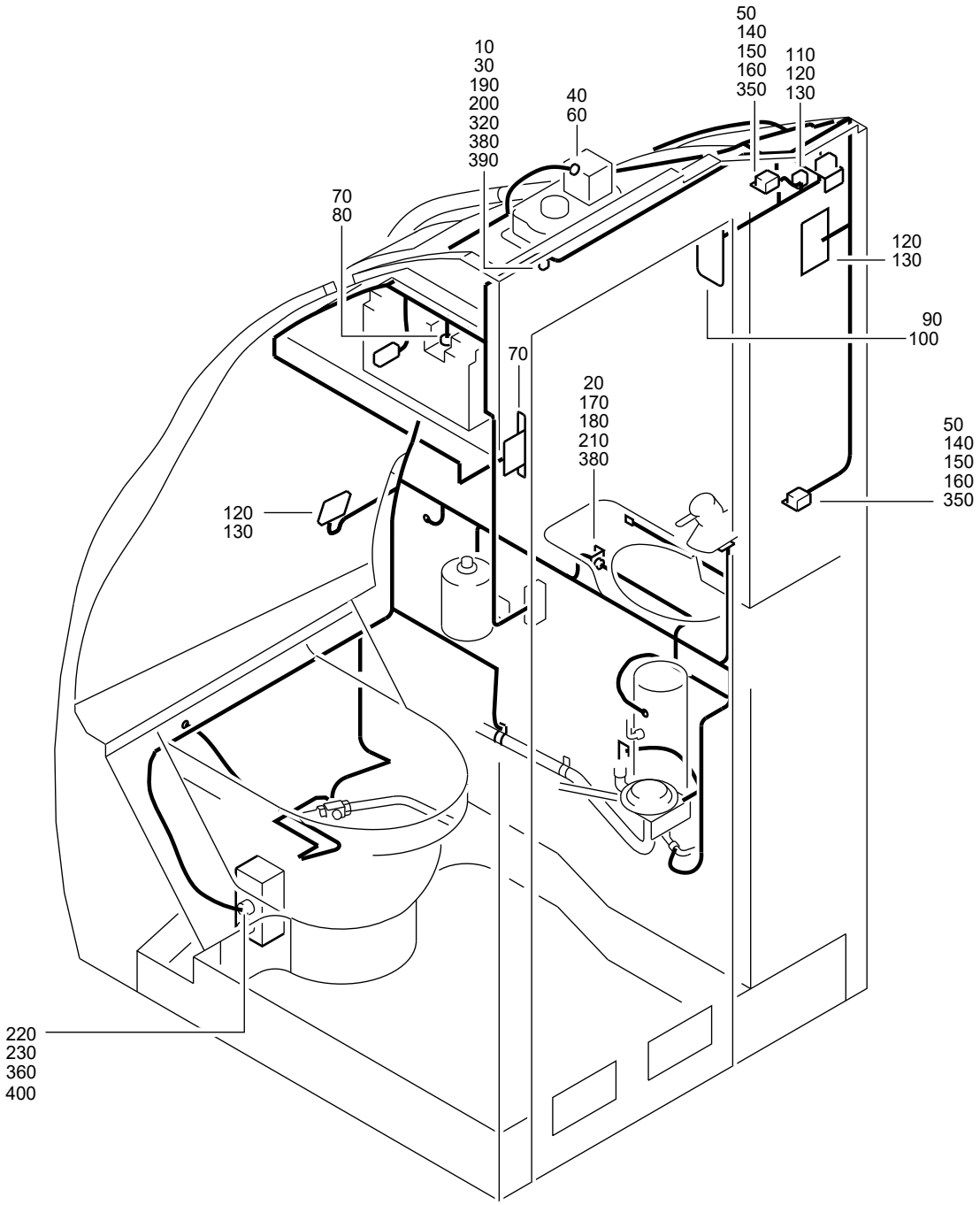

F_PL_254151_27_A_01_00

HARNESS ASSY-CABLE
Figure 27A/EN254151SHEET27A01

FIG. ITEM	PART NUMBER	AIRLINE STOCK NUMBER	NOMENCLATURE 1234567		EFF CODE	UNITS PER ASSY
27A						
-001A	A292901301-000		. HARNESS ASSY-CABLE used on 010A (25415126C), 010B (25415126D), 010A (25415126E) SEE 25-41-51-26C FOR NHA SEE 25-41-51-26D FOR NHA SEE 25-41-51-26E FOR NHA	NP		RF
-001B	A292901301-006		. HARNESS ASSY-CABLE used on 010B (25415126C), 010C (25415126D), 010B (25415126E) SEE 25-41-51-26C FOR NHA SEE 25-41-51-26D FOR NHA SEE 25-41-51-26E FOR NHA	NP		RF
-001C	A292901301-008		. HARNESS ASSY-CABLE used on 010C (25415126C), 010A (25415126D), 010C (25415126E) SEE 25-41-51-26C FOR NHA SEE 25-41-51-26D FOR NHA SEE 25-41-51-26E FOR NHA	NP		RF
-001D	A292901301-002		. HARNESS ASSY-CABLE used on 010A (25415126H) SEE 25-41-51-26H FOR NHA	NP		RF
010A	E0053R22B55PNE		. . CONNECTOR-RECEPTACLE used on 001A, 001B, 001C, 001D			001
020A	NAS1102-04-6		. . SCREW used on 001A, 001B, 001C, 001D			002
030A	ABS0638C22		. . BACKSHELL-CONNECTOR used on 001A, 001B, 001C, 001D			001
040A	E0052R12B10SNE		. . CONNECTOR-PLUG used on 001A, 001B, 001C, 001D			001

- ITEM NOT ILLUSTRATED

FIG. ITEM	PART NUMBER	AIRLINE STOCK NUMBER	NOMENCLATURE 1234567	EFF CODE	UNITS PER ASSY
050A	NSA938152SA2000		. . CONTACT-SOCKET BUY PN EN3155-019F2018 used on 001A, 001B, 001C, 001D		043
060A	ABS0638A12		. . BACKSHELL-CONNECTOR used on 001A, 001B, 001C, 001D		001
070A	NSA936830-20		. . SPLICE used on 001A, 001B, 001C, 001D		009
080A	NSA937910EA2000		. . CONTACT-PIN used on 001A, 001B, 001C, 001D		014
090A	DAN387-01		. . TERMINAL-CABLE used on 001A, 001B, 001C, 001D		002
100A	DAN387-02		. . INSULATION used on 001A, 001B, 001C, 001D		002
110A	320559		. . SPLICE used on 001A, 001B, 001C, 001D		005
120A	170324-2		. . TERMINAL-CABLE used on 001A, 001B, 001C, 001D		008
130A	928083-1		. . HOUSING used on 001A, 001B, 001C, 001D		008
140A	ABS0364A10S		. . CONNECTOR-RECEPTACLE used on 001A, 001B, 001C, 001D		002
150A	ABS0364C		. . BRACKET-CABLE used on 001A, 001B, 001C, 001D		002
160A	ABS0364D		. . CAP-PROTECTIVE used on 001A, 001B, 001C, 001D		002
170A	E0053R10B6SNE		. . CONNECTOR-RECEPTACLE used on 001A, 001B, 001C, 001D		001

- ITEM NOT ILLUSTRATED

FIG. ITEM	PART NUMBER	AIRLINE STOCK NUMBER	NOMENCLATURE 1234567	EFF CODE	UNITS PER ASSY
180A	ABS0638C10		. . BACKSHELL-CONNECTOR used on 001A, 001B, 001C, 001D		001
190A	A292500300-204		. . BRACKET used on 001A, 001B, 001C, 001D		001
200A	NAS1100-04-5		. . SCREW used on 001A, 001B, 001C, 001D		002
210A	A292500300-202		. . BRACKET used on 001A, 001B, 001C, 001D		001
220A	E0052R14B12SNE		. . CONNECTOR-PLUG used on 001A, 001B, 001C, 001D		001
230A	ABS0638A14		. . BACKSHELL-CONNECTOR used on 001A, 001B, 001C, 001D		001
-240A	E0248A2-4H9		. . LABEL used on 001A, 001B, 001C, 001D		003
-250A	RNF100-1-3-16-9		. . TUBING-HEAT-SHRINKABLE USE AS REQUIRED REQUIRED LENGTH 1200 MM used on 001A, 001B, 001C, 001D		AR
-260A	NSA935805-06		. . ELECTRICAL CONDUIT USE AS REQUIRED REQUIRED LENGTH 400 MM used on 001A, 001B, 001C, 001D		AR
-270A	NSA935805-09		. . ELECTRICAL CONDUIT USE AS REQUIRED REQUIRED LENGTH 1800 MM used on 001A, 001B, 001C, 001D		AR
-280A	NSA935805-12		. . ELECTRICAL CONDUIT USE AS REQUIRED REQUIRED LENGTH 300 MM used on 001A, 001B, 001C, 001D		AR

- ITEM NOT ILLUSTRATED

FIG. ITEM	PART NUMBER	AIRLINE STOCK NUMBER	NOMENCLATURE 1234567	EFF CODE	UNITS PER ASSY
-290A	TMS1-8ME500		. . SPOUT used on 001A, 001B, 001C, 001D		018
-300A	TMS1-8ME400		. . SLEEVE-IDENTIFICATION used on 001A, 001B, 001C, 001D		047
-310A	E0126-05B		. . TUBING-HEAT-SHRINKABLE USE AS REQUIRED REQUIRED LENGTH 1400 MM used on 001A, 001B, 001C, 001D		AR
320A	TMS3-4		. . SLEEVE-IDENTIFICATION used on 001A, 001B, 001C, 001D		001
-330A	NSA937790-00		. . SLEEVE-SHRINKABLE used on 001A, 001B, 001C, 001D		006
-340A	NSA935401-03		. . TIE-CABLE used on 001A, 001B, 001C, 001D		100
350A	NSA935402-51		. . TIE-IDENTIFICATION used on 001A, 001B, 001C, 001D		025
360A	NSA935401-04		. . TIE-CABLE used on 001A, 001B, 001C, 001D		006
-370A	NSA938151PA2000		. . CONTACT-PIN BUY PN EN3155-018M2018 used on 001A, 001B, 001C, 001D		081
380A	MS21042-04		. . NUT used on 001A, 001B, 001C, 001D		004
390A	E0616BB2000		. . PLUG used on 001A, 001B, 001C, 001D		057
400A	E0616BB1600		. . PLUG used on 001A, 001B, 001C, 001D		001

- ITEM NOT ILLUSTRATED

FIG. ITEM	PART NUMBER	AIRLINE STOCK NUMBER	NOMENCLATURE 1234567	EFF CODE	UNITS PER ASSY
-410A	E0261CF20		. . CABLE USE AS REQUIRED BUY PN EN2267-010A006S used on 001A, 001B, 001C, 001D		AR
-420A	E0261CF18		. . CABLE USE AS REQUIRED BUY PN EN2267-010A010S used on 001A, 001B, 001C, 001D		AR
-430A	E0261CF22		. . CABLE USE AS REQUIRED BUY PN EN2267-010A004S used on 001A, 001B, 001C, 001D		AR
-440A	E0272TK22		. . CABLE USE AS REQUIRED used on 001A, 001B, 001C, 001D		AR

- ITEM NOT ILLUSTRATED

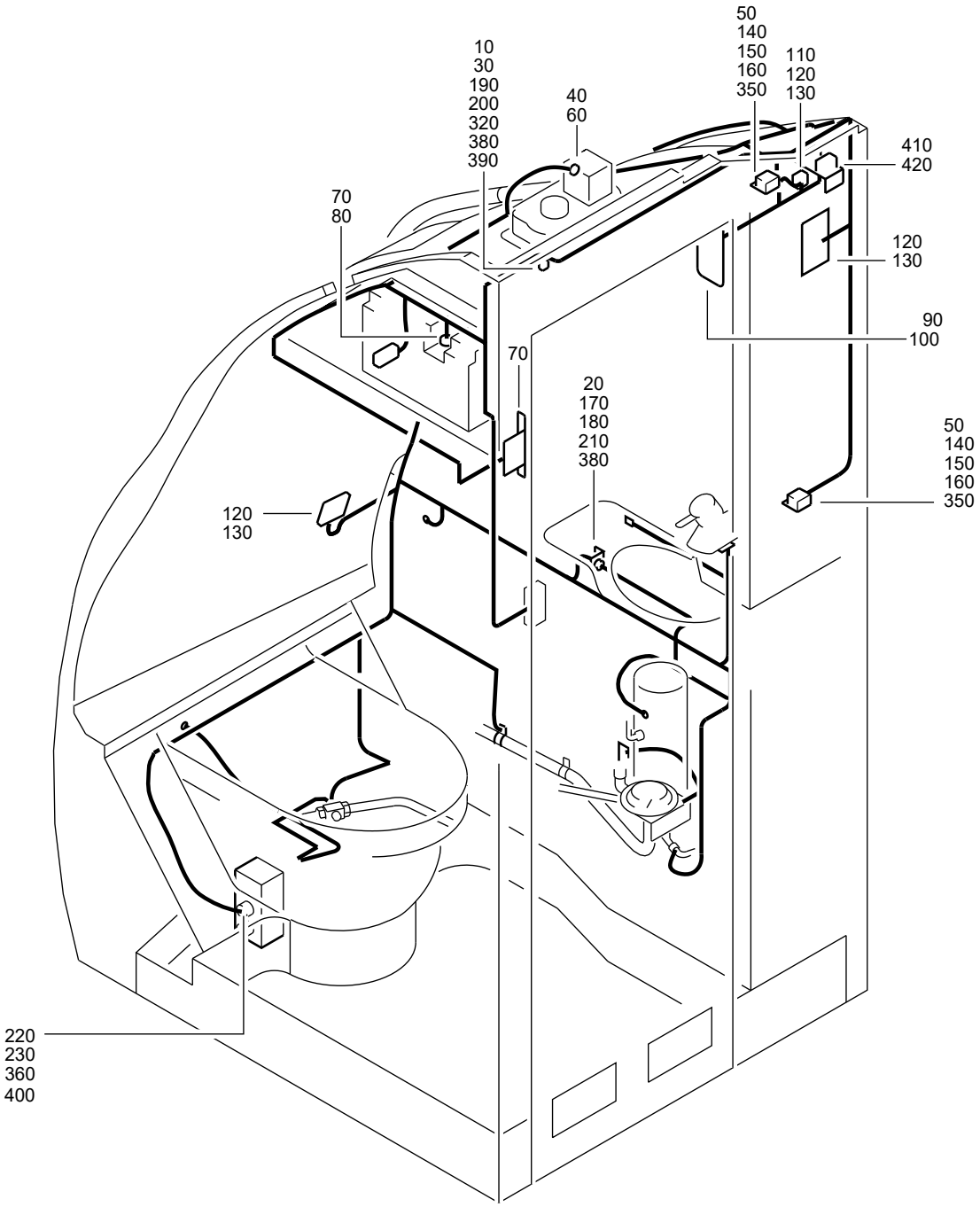

F_PL_254151_27_B_01_00

HARNESS ASSY-CABLE
Figure 27B/EN254151SHEET27B01

FIG. ITEM	PART NUMBER	AIRLINE STOCK NUMBER	NOMENCLATURE 1234567	EFF CODE	UNITS PER ASSY
27B					
-001A	A292901303-000		. HARNESS ASSY-CABLE NP used on 010A (25415126F), 010A (25415126G) SEE 25-41-51-26F FOR NHA SEE 25-41-51-26G FOR NHA		RF
-001B	A292901303-008		. HARNESS ASSY-CABLE NP used on 010B (25415126F) SEE 25-41-51-26F FOR NHA		RF
-001C	A292901303-002		. HARNESS ASSY-CABLE NP used on 010A (25415126L) SEE 25-41-51-26L FOR NHA		RF
010A	E0053R22B55PNE		. . CONNECTOR-RECEPTACLE used on 001A, 001B, 001C		001
020A	NAS1102-04-6		. . SCREW used on 001A, 001B, 001C		002
030A	ABS0638C22		. . BACKSHELL-CONNECTOR used on 001A, 001B, 001C		001
040A	E0052R12B10SNE		. . CONNECTOR-PLUG used on 001A, 001B, 001C		001
050A	NSA938152SA2000		. . CONTACT-SOCKET BUY PN EN3155-019F2018 used on 001A, 001B, 001C		043
060A	ABS0638A12		. . BACKSHELL-CONNECTOR used on 001A, 001B, 001C		001
070A	NSA936830-20		. . SPLICE used on 001A, 001B, 001C		009
080A	NSA937910EA2000		. . CONTACT-PIN used on 001A, 001B, 001C		014

- ITEM NOT ILLUSTRATED

FIG. ITEM	PART NUMBER	AIRLINE STOCK NUMBER	NOMENCLATURE 1234567	EFF CODE	UNITS PER ASSY
090A	DAN387-01		. . TERMINAL-CABLE used on 001A, 001B, 001C		002
100A	DAN387-02		. . INSULATION used on 001A, 001B, 001C		002
110A	320559		. . SPLICE used on 001A, 001B, 001C		005
120A	170324-2		. . TERMINAL-CABLE used on 001A, 001B, 001C		008
130A	928083-1		. . HOUSING used on 001A, 001B, 001C		008
140A	ABS0364A10S		. . CONNECTOR-RECEPTACLE used on 001A, 001B, 001C		002
150A	ABS0364C		. . BRACKET-CABLE used on 001A, 001B, 001C		002
160A	ABS0364D		. . CAP-PROTECTIVE used on 001A, 001B, 001C		002
170A	E0053R10B6SNE		. . CONNECTOR-RECEPTACLE used on 001A, 001B, 001C		001
180A	ABS0638C10		. . BACKSHELL-CONNECTOR used on 001A, 001B, 001C		001
190A	A292500300-204		. . BRACKET used on 001A, 001B, 001C		001
200A	NAS1100-04-5		. . SCREW used on 001A, 001B, 001C		002
210A	A292500300-202		. . BRACKET used on 001A, 001B, 001C		001

- ITEM NOT ILLUSTRATED

FIG. ITEM	PART NUMBER	AIRLINE STOCK NUMBER	NOMENCLATURE 1234567	EFF CODE	UNITS PER ASSY
220A	E0052R14B12SNE		. . CONNECTOR-PLUG used on 001A, 001B, 001C		001
230A	ABS0638A14		. . BACKSHELL-CONNECTOR used on 001A, 001B, 001C		001
-240A	E0248A2-4H9		. . LABEL used on 001A, 001B, 001C		003
-250A	RNF100-1-3-16-9		. . TUBING-HEAT-SHRINKABLE USE AS REQUIRED REQUIRED LENGTH 1200 MM used on 001A, 001B, 001C		AR
-260A	NSA935805-06		. . ELECTRICAL CONDUIT USE AS REQUIRED REQUIRED LENGTH 400 MM used on 001A, 001B, 001C		AR
-270A	NSA935805-09		. . ELECTRICAL CONDUIT USE AS REQUIRED REQUIRED LENGTH 1800 MM used on 001A, 001B, 001C		AR
-280A	NSA935805-12		. . ELECTRICAL CONDUIT USE AS REQUIRED REQUIRED LENGTH 300 MM used on 001A, 001B, 001C		AR
-290A	TMS1-8ME500		. . SPOUT used on 001A, 001B, 001C		018
-300A	TMS1-8ME400		. . SLEEVE-IDENTIFICATION used on 001A, 001B, 001C		047
-310A	E0126-05B		. . TUBING-HEAT-SHRINKABLE USE AS REQUIRED REQUIRED LENGTH 1400 MM used on 001A, 001B, 001C		AR

- ITEM NOT ILLUSTRATED

FIG. ITEM	PART NUMBER	AIRLINE STOCK NUMBER	NOMENCLATURE 1234567	EFF CODE	UNITS PER ASSY
320A	TMS3-4		. . SLEEVE-IDENTIFICATION used on 001A, 001B, 001C		001
-330A	NSA937790-00		. . SLEEVE-SHRINKABLE used on 001A, 001B, 001C		006
-340A	NSA935401-03		. . TIE-CABLE used on 001A, 001B, 001C		100
350A	NSA935402-51		. . TIE-IDENTIFICATION used on 001A, 001B, 001C		025
360A	NSA935401-04		. . TIE-CABLE used on 001A, 001B, 001C		006
-370A	NSA938151PA2000		. . CONTACT-PIN BUY PN EN3155-018M2018 used on 001A, 001B, 001C		081
380A	MS21042-04		. . NUT used on 001A, 001B, 001C		004
390A	E0616BB2000		. . PLUG used on 001A, 001B, 001C		057
400A	E0616BB1600		. . PLUG used on 001A, 001B, 001C		001
410A	E0237E09S03A		. . CONNECTOR BUY PN E0237E09S03B used on 001A, 001B, 001C		001
420A	ABS0656A1B1		. . LATCH-SPRING used on 001A, 001B, 001C		001
-430A	E0261CF20		. . CABLE USE AS REQUIRED BUY PN EN2267-010A006S used on 001A, 001B, 001C		AR

- ITEM NOT ILLUSTRATED

FIG. ITEM	PART NUMBER	AIRLINE STOCK NUMBER	NOMENCLATURE 1234567	EFF CODE	UNITS PER ASSY
-440A	E0261CF18		. . CABLE USE AS REQUIRED BUY PN EN2267-010A010S used on 001A, 001B, 001C		AR
-450A	E0261CF22		. . CABLE USE AS REQUIRED BUY PN EN2267-010A004S used on 001A, 001B, 001C		AR
-460A	E0272TK22		. . CABLE USE AS REQUIRED used on 001A, 001B, 001C		AR

- ITEM NOT ILLUSTRATED

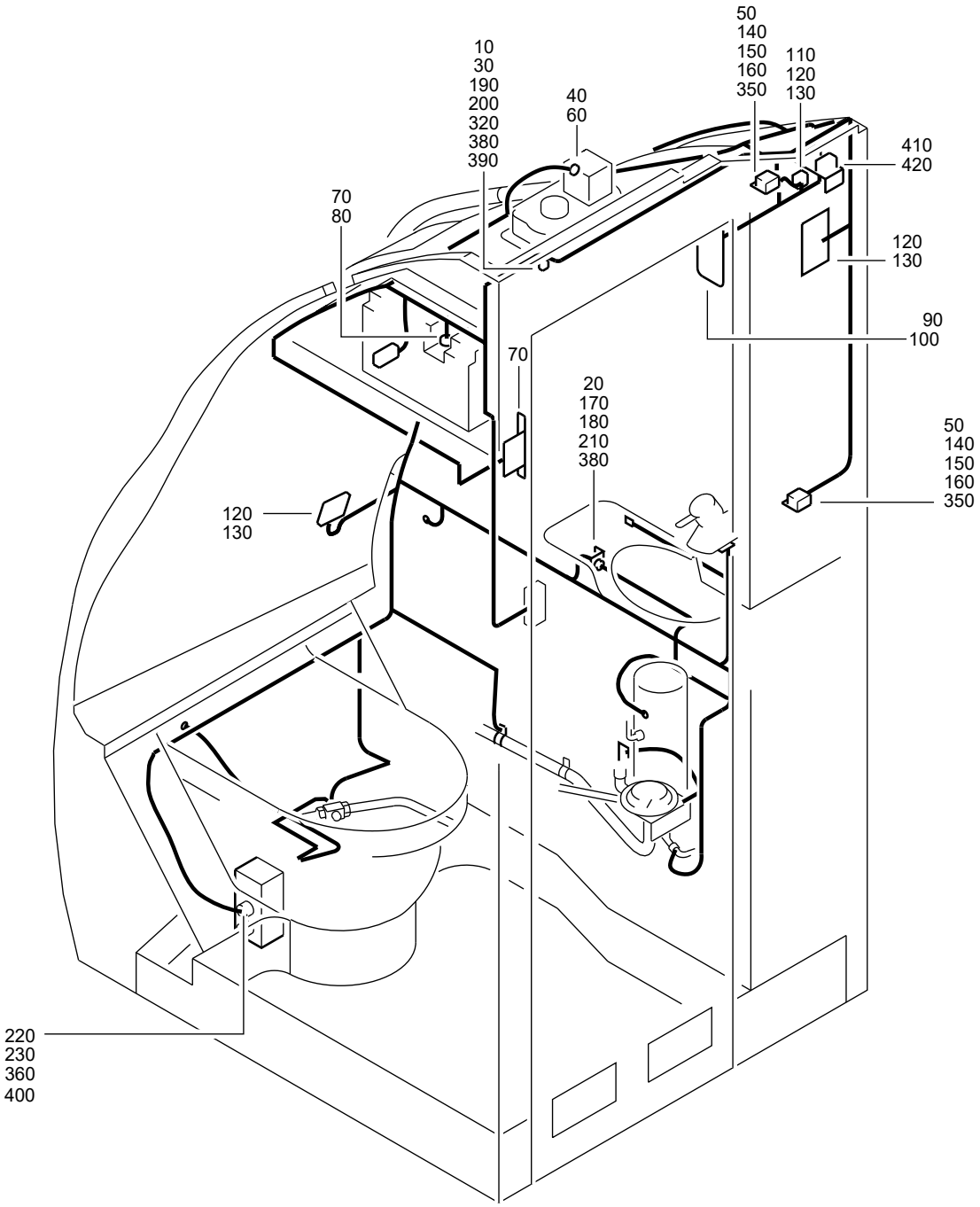

F_PL_254151_27_C_01_00

HARNESS ASSY-CABLE
Figure 27C/EN254151SHEET27C01

FIG. ITEM	PART NUMBER	AIRLINE STOCK NUMBER	NOMENCLATURE 1234567		EFF CODE	UNITS PER ASSY
27C						
-001A	A292901305-006		. HARNESS ASSY-CABLE used on 010A (25415126J), 010C (25415126K), 010B(25415126M), 010B (25415126N) SEE 25-41-51-26J FOR NHA SEE 25-41-51-26K FOR NHA SEE 25-41-51-26M FOR NHA SEE 25-41-51-26N FOR NHA	NP		RF
-001B	A292901305-000		. HARNESS ASSY-CABLE used on 010A (25415126K), 010A (25415126M), 010A(25415126P) SEE 25-41-51-26K FOR NHA SEE 25-41-51-26M FOR NHA SEE 25-41-51-26P FOR NHA	NP		RF
-001C	A292901305-008		. HARNESS ASSY-CABLE used on 010B (25415126K), 010C (25415126M) SEE 25-41-51-26K FOR NHA SEE 25-41-51-26M FOR NHA	NP		RF
-001D	A292901305-012		. HARNESS ASSY-CABLE used on 010D (25415126M), 010B (25415126P) SEE 25-41-51-26M FOR NHA SEE 25-41-51-26P FOR NHA	NP		RF
-001E	A292901305-002		. HARNESS ASSY-CABLE used on 010A (25415126N), 010C (25415126P), 010A (25415126T) SEE 25-41-51-26N FOR NHA SEE 25-41-51-26P FOR NHA SEE 25-41-51-26T FOR NHA	NP		RF
-001F	A292901305-010		. HARNESS ASSY-CABLE used on 010E (25415126M) SEE 25-41-51-26M FOR NHA	NP		RF

- ITEM NOT ILLUSTRATED

FIG. ITEM	PART NUMBER	AIRLINE STOCK NUMBER	NOMENCLATURE 1234567	EFF CODE	UNITS PER ASSY
010A	E0053R22B55PNE		. . CONNECTOR-RECEPTACLE used on 001A, 001B, 001C, 001D, 001E, 001F		001
020A	NAS1102-04-6		. . SCREW used on 001A, 001B, 001C, 001D, 001E, 001F		002
030A	ABS0638C22		. . BACKSHELL-CONNECTOR used on 001A, 001B, 001C, 001D, 001E, 001F		001
040A	E0052R12B10SNE		. . CONNECTOR-PLUG used on 001A, 001B, 001C, 001D, 001E, 001F		001
050A	NSA938152SA2000		. . CONTACT-SOCKET BUY PN EN3155-019F2018 used on 001A, 001B, 001C, 001D, 001E, 001F		043
060A	ABS0638A12		. . BACKSHELL-CONNECTOR used on 001A, 001B, 001C, 001D, 001E, 001F		001
070A	NSA936830-20		. . SPLICE used on 001A, 001B, 001C, 001D, 001E, 001F		009
080A	NSA937910EA2000		. . CONTACT-PIN used on 001A, 001B, 001C, 001D, 001E, 001F		014
090A	DAN387-01		. . TERMINAL-CABLE used on 001A, 001B, 001C, 001D, 001E, 001F		002
100A	DAN387-02		. . INSULATION used on 001A, 001B, 001C, 001D, 001E, 001F		002

- ITEM NOT ILLUSTRATED

FIG. ITEM	PART NUMBER	AIRLINE STOCK NUMBER	NOMENCLATURE 1234567	EFF CODE	UNITS PER ASSY
110A	320559		. . SPLICE used on 001A, 001B, 001C, 001D, 001E, 001F		005
120A	170324-2		. . TERMINAL-CABLE used on 001A, 001B, 001C, 001D, 001E, 001F		008
130A	928083-1		. . HOUSING used on 001A, 001B, 001C, 001D, 001E, 001F		008
140A	ABS0364A10S		. . CONNECTOR-RECEPTACLE used on 001A, 001B, 001C, 001D, 001E, 001F		002
150A	ABS0364C		. . BRACKET-CABLE used on 001A, 001B, 001C, 001D, 001E, 001F		002
160A	ABS0364D		. . CAP-PROTECTIVE used on 001A, 001B, 001C, 001D, 001E, 001F		002
170A	E0053R10B6SNE		. . CONNECTOR-RECEPTACLE used on 001A, 001B, 001C, 001D, 001E, 001F		001
180A	ABS0638C10		. . BACKSHELL-CONNECTOR used on 001A, 001B, 001C, 001D, 001E, 001F		001
190A	A292500300-204		. . BRACKET used on 001A, 001B, 001C, 001D, 001E, 001F		001
200A	NAS1100-04-5		. . SCREW used on 001A, 001B, 001C, 001D, 001E, 001F		002

- ITEM NOT ILLUSTRATED

FIG. ITEM	PART NUMBER	AIRLINE STOCK NUMBER	NOMENCLATURE 1234567	EFF CODE	UNITS PER ASSY
210A	A292500300-202		. . BRACKET used on 001A, 001B, 001C, 001D, 001E, 001F		001
220A	E0052R14B12SNE		. . CONNECTOR-PLUG used on 001A, 001B, 001C, 001D, 001E, 001F		001
230A	ABS0638A14		. . BACKSHELL-CONNECTOR used on 001A, 001B, 001C, 001D, 001E, 001F		001
-240A	E0248A2-4H9		. . LABEL used on 001A, 001B, 001C, 001D, 001E, 001F		003
-250A	RNF100-1-3-16-9		. . TUBING-HEAT-SHRINKABLE USE AS REQUIRED REQUIRED LENGTH 1200 MM used on 001A, 001B, 001C, 001D, 001E, 001F		AR
-260A	NSA935805-06		. . ELECTRICAL CONDUIT USE AS REQUIRED REQUIRED LENGTH 400 MM used on 001A, 001B, 001C, 001D, 001E, 001F		AR
-270A	NSA935805-09		. . ELECTRICAL CONDUIT USE AS REQUIRED REQUIRED LENGTH 1800 MM used on 001A, 001B, 001C, 001D, 001E, 001F		AR
-280A	NSA935805-12		. . ELECTRICAL CONDUIT USE AS REQUIRED REQUIRED LENGTH 300 MM used on 001A, 001B, 001C, 001D, 001E, 001F		AR

- ITEM NOT ILLUSTRATED

FIG. ITEM	PART NUMBER	AIRLINE STOCK NUMBER	NOMENCLATURE 1234567	EFF CODE	UNITS PER ASSY
-290A	TMS1-8ME500		. . SPOUT used on 001A, 001B, 001C, 001D, 001E, 001F		018
-300A	TMS1-8ME400		. . SLEEVE-IDENTIFICATION used on 001A, 001B, 001C, 001D, 001E, 001F		047
-310A	E0126-05B		. . TUBING-HEAT-SHRINKABLE USE AS REQUIRED REQUIRED LENGTH 1400 MM used on 001A, 001B, 001C, 001D, 001E, 001F		AR
320A	TMS3-4		. . SLEEVE-IDENTIFICATION used on 001A, 001B, 001C, 001D, 001E, 001F		001
-330A	NSA937790-00		. . SLEEVE-SHRINKABLE used on 001A, 001B, 001C, 001D, 001E, 001F		006
-340A	NSA935401-03		. . TIE-CABLE used on 001A, 001B, 001C, 001D, 001E, 001F		100
350A	NSA935402-51		. . TIE-IDENTIFICATION used on 001A, 001B, 001C, 001D, 001E, 001F		025
360A	NSA935401-04		. . TIE-CABLE used on 001A, 001B, 001C, 001D, 001E, 001F		006
-370A	NSA938151PA2000		. . CONTACT-PIN BUY PN EN3155-018M2018 used on 001A, 001B, 001C, 001D, 001E, 001F		081

- ITEM NOT ILLUSTRATED

FIG. ITEM	PART NUMBER	AIRLINE STOCK NUMBER	NOMENCLATURE 1234567	EFF CODE	UNITS PER ASSY
380A	MS21042-04		. . NUT used on 001A, 001B, 001C, 001D, 001E, 001F		004
390A	E0616BB2000		. . PLUG used on 001A, 001B, 001C, 001D, 001E, 001F		057
400A	E0616BB1600		. . PLUG used on 001A, 001B, 001C, 001D, 001E, 001F		001
410A	E0237E09S03A		. . CONNECTOR BUY PN E0237E09S03B used on 001A, 001B, 001C, 001D, 001E, 001F		001
420A	ABS0656A1B1		. . LATCH-SPRING used on 001A, 001B, 001C, 001D, 001E, 001F		001
-430A	E0261CF20		. . CABLE USE AS REQUIRED BUY PN EN2267-010A006S used on 001A, 001B, 001C, 001D, 001E, 001F		AR
-440A	E0261CF18		. . CABLE USE AS REQUIRED BUY PN EN2267-010A010S used on 001A, 001B, 001C, 001D, 001E, 001F		AR
-450A	E0261CF22		. . CABLE USE AS REQUIRED BUY PN EN2267-010A004S used on 001A, 001B, 001C, 001D, 001E, 001F		AR

- ITEM NOT ILLUSTRATED

FIG. ITEM	PART NUMBER	AIRLINE STOCK NUMBER	NOMENCLATURE 1234567	EFF CODE	UNITS PER ASSY
-460A	E0272TK22		. . CABLE USE AS REQUIRED used on 001A, 001B, 001C, 001D, 001E, 001F		AR

- ITEM NOT ILLUSTRATED

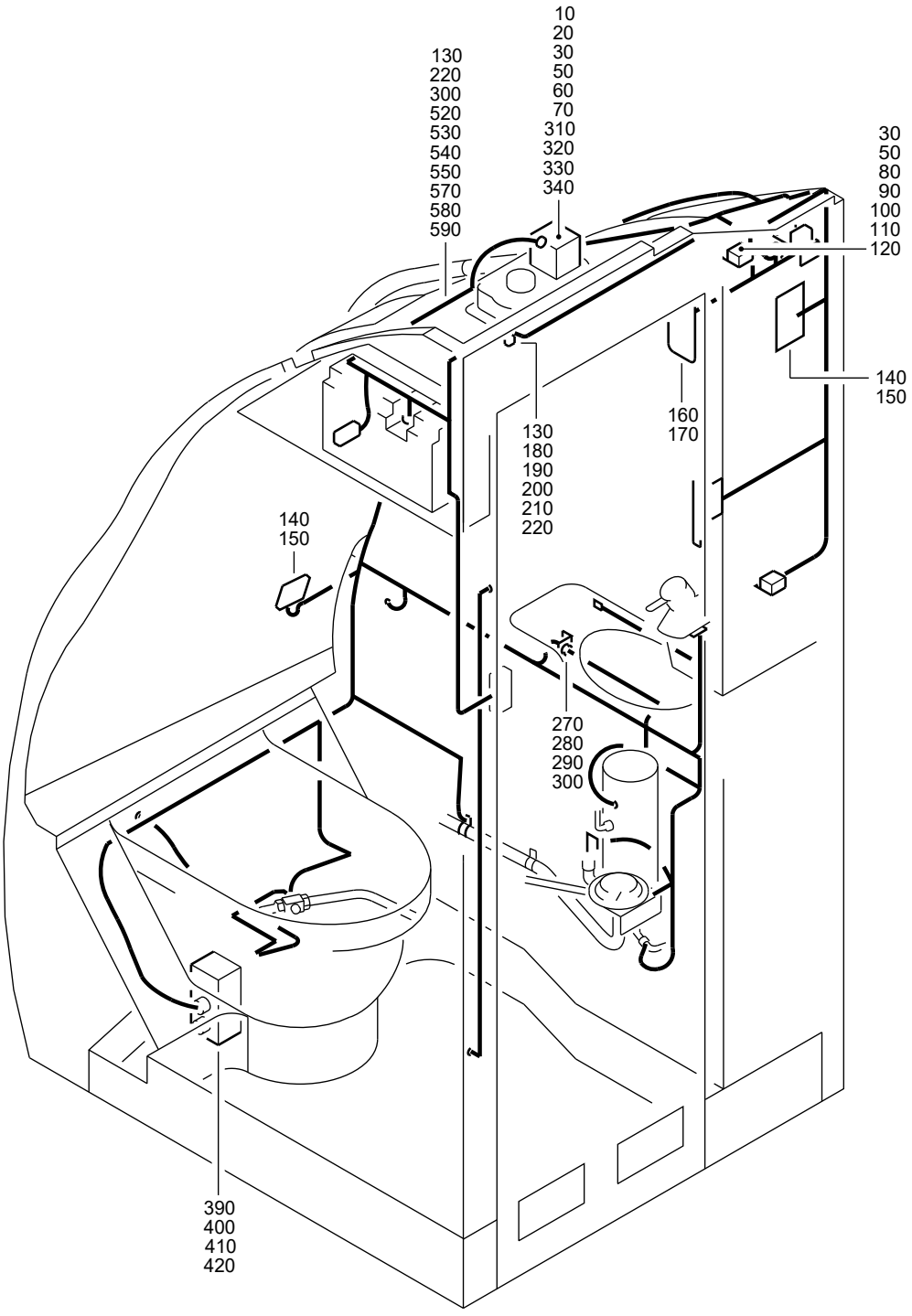

F_PL_254151_27_D_01_00

HARNESS ASSY-CABLE
Figure 27D/EN254151SHEET27D01

FIG. ITEM	PART NUMBER	AIRLINE STOCK NUMBER	NOMENCLATURE 1234567		EFF CODE	UNITS PER ASSY
27D						
-001A	A292901307-000		. HARNESS ASSY-CABLE POST SB 25-1640 used on 010A (25415126Q), 010A (25415126S), 010A (25415126U) SEE 25-41-51-26Q FOR NHA SEE 25-41-51-26S FOR NHA SEE 25-41-51-26U FOR NHA	NP		RF
-001B	A292901307-002		. HARNESS ASSY-CABLE used on 010B (25415126Q), 010B (25415126U) SEE 25-41-51-26Q FOR NHA SEE 25-41-51-26U FOR NHA	NP		RF
-001C	A292901307-006		. HARNESS ASSY-CABLE used on 010C (25415126U) SEE 25-41-51-26U FOR NHA	NP		RF
-001D	A292901307-008		. HARNESS ASSY-CABLE used on 010D (25415126U) SEE 25-41-51-26U FOR NHA	NP		RF
010A	NSA936830-20		. . SPLICE used on 001A, 001B, 001C, 001D			012
020A	NSA937910EA2000		. . CONTACT-PIN used on 001A, 001B, 001D			025
-020B	EN3155-016M2018		. . CONTACT used on 001C			025
030A	NSA935402-51		. . TIE-IDENTIFICATION used on 001A, 001B, 001C, 001D			014
-040A	ABS0237-03		. . SLEEVE-SOLDER used on 001A, 001B, 001C, 001D			006

- ITEM NOT ILLUSTRATED

FIG. ITEM	PART NUMBER	AIRLINE STOCK NUMBER	NOMENCLATURE 1234567	EFF CODE	UNITS PER ASSY
050A	NSA938152SA2000		. . CONTACT-SOCKET BUY PN EN3155-019F2018 used on 001A, 001B, 001C, 001D		040
060A	ABS0638A14		. . BACKSHELL-CONNECTOR used on 001A, 001B, 001C, 001D		001
070A	E0052R14B19SNE		. . CONNECTOR-PLUG used on 001A, 001B, 001C, 001D		001
080A	E0237E09S03A		. . CONNECTOR BUY PN E0237E09S03B used on 001A, 001B, 001C, 001D		001
090A	ABS0656A1B1		. . LATCH-SPRING used on 001A, 001B, 001C, 001D		002
100A	ABS0364A10S		. . CONNECTOR-RECEPTACLE used on 001A, 001B, 001C, 001D		001
110A	ABS0364C		. . BRACKET-CABLE used on 001A, 001B, 001C, 001D		001
120A	ABS0364D		. . CAP-PROTECTIVE used on 001A, 001B, 001C, 001D		001
130A	TMS1-8-10-9		. . SLEEVE-IDENTIFICATION used on 001A, 001B, 001C, 001D		004
140A	170324-2		. . TERMINAL-CABLE used on 001A, 001B, 001C, 001D		008
150A	928083-1		. . HOUSING used on 001A, 001B, 001C, 001D		008
160A	DAN387-01		. . TERMINAL-CABLE used on 001A, 001B, 001C, 001D		002
170A	DAN387-02		. . INSULATION used on 001A, 001B, 001C, 001D		002

- ITEM NOT ILLUSTRATED

FIG. ITEM	PART NUMBER	AIRLINE STOCK NUMBER	NOMENCLATURE 1234567	EFF CODE	UNITS PER ASSY
180A	NSA937901M20-11		. . MODULE used on 001A, 001B, 001C, 001D		003
190A	NSA937901M20-08		. . MODULE used on 001A, 001B, 001C, 001D		002
200A	NSA937901R0060		. . RAIL used on 001A, 001B, 001C, 001D		001
210A	NSA937901S		. . CLAMP-END used on 001A, 001B, 001C, 001D		002
220A	E0616BB2000		. . PLUG used on 001A, 001B, 001C, 001D		039
-230A	ABS1019-003ASC		. . CONNECTOR-PLUG BUY PN ABS1019-003AS used on 001A, 001B, 001C, 001D		001
-240A	ABS1019-005A		. . CLAMP-CABLE used on 001A, 001B, 001C, 001D		001
-250A	E0396DV2001		. . CONTACT-SOCKET used on 001A, 001B, 001D		012
-250B	EN3155-015F2018		. . CONTACT used on 001C		012
-260A	E0396DV2200		. . CONTACT-SOCKET BUY PN EN3155-003F2222 used on 001A, 001B, 001C, 001D		006
270A	E0053R10B6SNE		. . CONNECTOR-RECEPTACLE used on 001A, 001B, 001D		001
-270B	EN3646A01006BN		. . CONNECTOR-RECEPTACLE BUY PN EN3646A01006DN used on 001C		001

- ITEM NOT ILLUSTRATED

FIG. ITEM	PART NUMBER	AIRLINE STOCK NUMBER	NOMENCLATURE 1234567	EFF CODE	UNITS PER ASSY
280A	ABS0638C10		. . BACKSHELL-CONNECTOR used on 001A, 001B, 001C, 001D		001
290A	A292500300-202		. . BRACKET used on 001A, 001B, 001C, 001D		001
300A	MS21042-04		. . NUT used on 001A, 001B, 001C, 001D		004
310A	E0245-28A0		. . RELAY BUY PN E0670D28A0 used on 001A, 001B, 001C, 001D		001
320A	E0250A0		. . BASE used on 001A, 001B, 001C, 001D		001
330A	E0252DK1601		. . CONTACT-SOCKET BUY PN EN3155-017F1620 used on 001A, 001B, 001C, 001D		008
340A	A292500301-200		. . ANGLE used on 001A, 001B, 001C, 001D		001
-350A	ABS0386WF24		. . CABLE REQUIRED LENGTH 2500 MM used on 001A, 001B, 001C, 001D		001
-360A	ABS0388B09A		. . BACKSHELL used on 001A, 001B, 001C, 001D		001
-370A	TMS3-32-10-9		. . SLEEVE-IDENTIFICATION used on 001A, 001B, 001C, 001D		054
-380A	TMS3-16-10-9		. . SLEEVE-IDENTIFICATION used on 001A, 001B, 001C, 001D		004
390A	E0616BB1600		. . PLUG used on 001A, 001B, 001C, 001D		002

- ITEM NOT ILLUSTRATED

FIG. ITEM	PART NUMBER	AIRLINE STOCK NUMBER	NOMENCLATURE 1234567	EFF CODE	UNITS PER ASSY
400A	NSA935401-04		. . TIE-CABLE used on 001A, 001B, 001C, 001D		008
410A	E0052R14B12SNE		. . CONNECTOR-PLUG used on 001A, 001B, 001C, 001D		001
420A	ABS0638A14		. . BACKSHELL-CONNECTOR used on 001A, 001B, 001C, 001D		001
-430A	NSA935805-04		. . ELECTRICAL CONDUIT REQUIRED LENGTH 300 MM used on 001A, 001B, 001C, 001D		001
-440A	NSA935805-06		. . ELECTRICAL CONDUIT REQUIRED LENGTH 300 MM used on 001A, 001B, 001C, 001D		001
-450A	NSA935805-09		. . ELECTRICAL CONDUIT REQUIRED LENGTH 3700 MM used on 001A, 001B, 001C, 001D		001
-460A	NSA935805-12		. . ELECTRICAL CONDUIT REQUIRED LENGTH 1200 MM used on 001A, 001B, 001C, 001D		001
-470A	NSA935805-16		. . ELECTRICAL CONDUIT REQUIRED LENGTH 300 MM used on 001A, 001B, 001C, 001D		001
-480A	E0126-04B		. . TUBING-HEAT-SHRINKABLE REQUIRED LENGTH 1000 MM used on 001A, 001B, 001C, 001D		001
-490A	RNF100-1-3-16-9		. . TUBING-HEAT-SHRINKABLE REQUIRED LENGTH 3700 MM used on 001A, 001B, 001C, 001D		001
-500A	E0126-05B		. . TUBING-HEAT-SHRINKABLE REQUIRED LENGTH 750 MM used on 001A, 001B, 001C, 001D		001

- ITEM NOT ILLUSTRATED

FIG. ITEM	PART NUMBER	AIRLINE STOCK NUMBER	NOMENCLATURE 1234567	EFF CODE	UNITS PER ASSY
-510A	NSA938151PA2000		. . CONTACT-PIN BUY PN EN3155-018M2018 used on 001A, 001B, 001C, 001D		055
520A	E0053R22B55PNE		. . CONNECTOR-RECEPTACLE used on 001A, 001B, 001C, 001D		001
530A	ABS0638C22		. . BACKSHELL-CONNECTOR used on 001A, 001B, 001C, 001D		001
540A	A292500300-204		. . BRACKET used on 001A, 001B, 001C, 001D		001
550A	NAS1100-04-5		. . SCREW used on 001A, 001B, 001C, 001D		004
-560A	E0264PF22		. . CABLE REQUIRED LENGTH 3550 MM used on 001A, 001B, 001C, 001D		001
570A	E0248A2-4H9		. . LABEL used on 001A, 001B, 001C, 001D		002
580A	TMS3-4-10-9		. . SLEEVE-IDENTIFICATION used on 001A, 001B, 001D		001
590A	NSA935401-03		. . TIE-CABLE used on 001A, 001B, 001C, 001D		040
-600A	E0261CF18U		. . CABLE REQUIRED LENGTH 31500 MM BUY PN EN2267-010A010S used on 001A, 001B, 001C, 001D		001
-610A	E0261CF20U		. . CABLE REQUIRED LENGTH 27000 MM BUY PN EN2267-010A006S used on 001A, 001B, 001C, 001D		001

- ITEM NOT ILLUSTRATED

FIG. ITEM	PART NUMBER	AIRLINE STOCK NUMBER	NOMENCLATURE 1234567	EFF CODE	UNITS PER ASSY
-620A	E0261CF22		. . CABLE REQUIRED LENGTH 52000 MM BUY PN EN2267-010A004S used on 001A, 001B, 001C, 001D		001
-630A	E0272TK22U		. . CABLE REQUIRED LENGTH 8700 MM used on 001A, 001B, 001C, 001D		001
-640A	172234-1		. . CONNECTOR-RECEPTACLE POST SB 25-1640 used on 001A		001

- ITEM NOT ILLUSTRATED

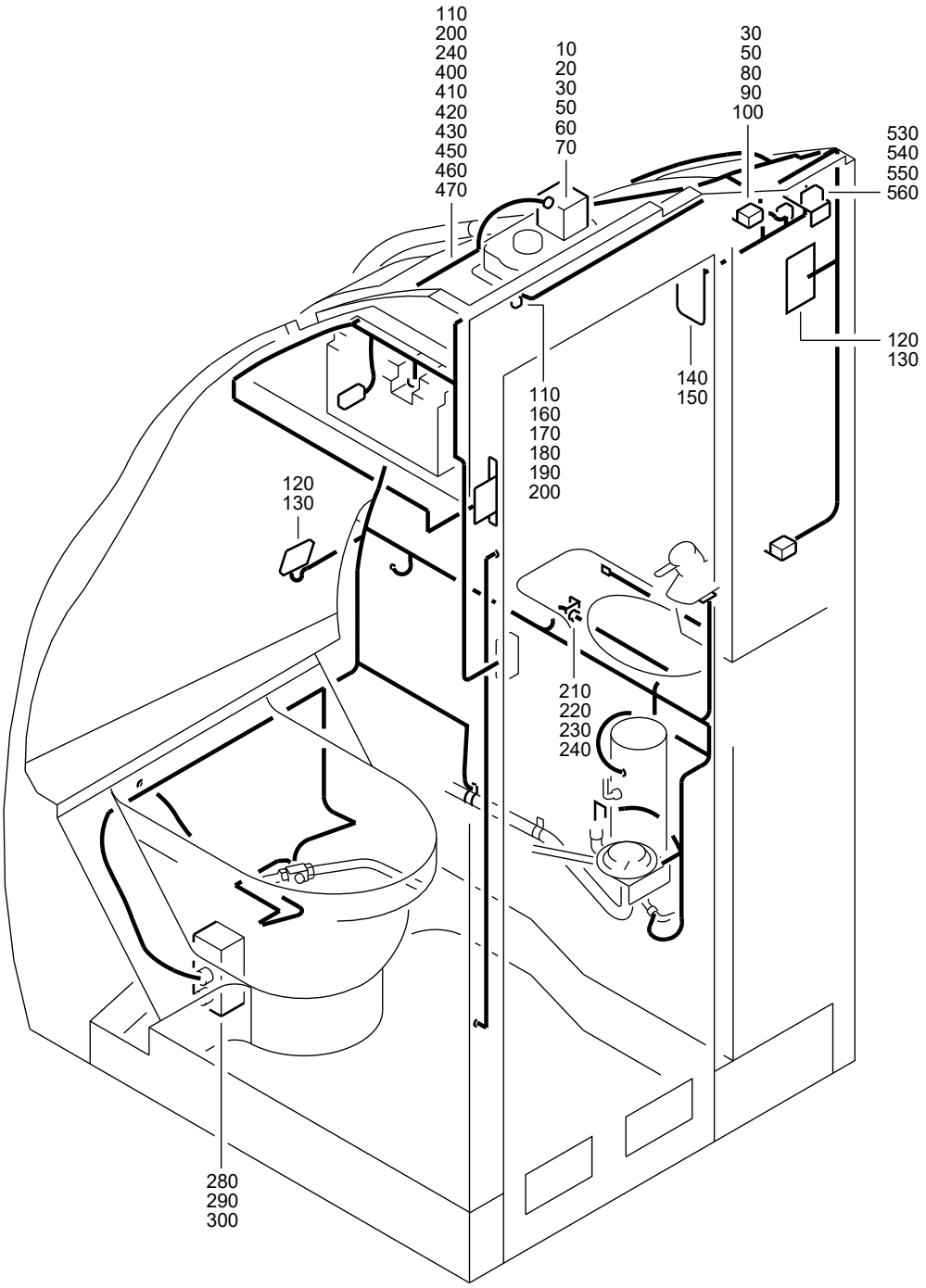

F_PL_254151_27_E_01_00

HARNESS ASSY-CABLE
Figure 27E/EN254151SHEET27E01

FIG. ITEM	PART NUMBER	AIRLINE STOCK NUMBER	NOMENCLATURE 1234567		EFF CODE	UNITS PER ASSY
27E						
-001A	A292901309-000		. HARNESS ASSY-CABLE used on 010A (25415126R) SEE 25-41-51-26R FOR NHA	NP		RF
-001B	A292901309-002		. HARNESS ASSY-CABLE used on 010B (25415126R) SEE 25-41-51-26R FOR NHA	NP		RF
-001C	A292901309-008		. HARNESS ASSY-CABLE used on 010C (25415126R) SEE 25-41-51-26R FOR NHA	NP		RF
-001D	A292901309-004		. HARNESS ASSY-CABLE used on 010D (25415126R) SEE 25-41-51-26R FOR NHA	NP		RF
-001E	A292901309-012		. HARNESS ASSY-CABLE used on 010E (25415126R) SEE 25-41-51-26R FOR NHA	NP		RF
-001F	A292901309-010		. HARNESS ASSY-CABLE used on 010F (25415126R) SEE 25-41-51-26R FOR NHA	NP		RF
010A	NSA936830-20		. . SPLICE used on 001A, 001B, 001C, 001D, 001E, 001F			005
020A	NSA937910EA2000		. . CONTACT-PIN used on 001A, 001B, 001C, 001D, 001E, 001F			018
030A	NSA935402-51		. . TIE-IDENTIFICATION used on 001A, 001B, 001C, 001D, 001E, 001F			014
-040A	ABS0237-03		. . SLEEVE-SOLDER used on 001A, 001B, 001C, 001D, 001E, 001F			004

- ITEM NOT ILLUSTRATED

FIG. ITEM	PART NUMBER	AIRLINE STOCK NUMBER	NOMENCLATURE 1234567	EFF CODE	UNITS PER ASSY
050A	NSA938152SA2000		. . CONTACT-SOCKET BUY PN EN3155-019F2018 used on 001A, 001B, 001C, 001D, 001E, 001F		037
060A	ABS0638A12		. . BACKSHELL-CONNECTOR used on 001A, 001B, 001C, 001D, 001E, 001F		001
070A	E0052R12B10SNE		. . CONNECTOR-PLUG used on 001A, 001B, 001C, 001D, 001E, 001F		001
080A	ABS0364A10S		. . CONNECTOR-RECEPTACLE used on 001A, 001B, 001C, 001D, 001E, 001F		001
090A	ABS0364C		. . BRACKET-CABLE used on 001A, 001B, 001C, 001D, 001E, 001F		001
100A	ABS0364D		. . CAP-PROTECTIVE used on 001A, 001B, 001C, 001D, 001E, 001F		001
110A	TMS1-8-10-9		. . SLEEVE-IDENTIFICATION used on 001A, 001B, 001C, 001D, 001E, 001F		004
120A	170324-2		. . TERMINAL-CABLE used on 001A, 001B, 001C, 001D, 001E, 001F		008
130A	928083-1		. . HOUSING used on 001A, 001B, 001C, 001D, 001E, 001F		008
140A	DAN387-01		. . TERMINAL-CABLE used on 001A, 001B, 001C, 001D, 001E, 001F		002

- ITEM NOT ILLUSTRATED

FIG. ITEM	PART NUMBER	AIRLINE STOCK NUMBER	NOMENCLATURE 1234567	EFF CODE	UNITS PER ASSY
150A	DAN387-02		. . INSULATION used on 001A, 001B, 001C, 001D, 001E, 001F		002
160A	NSA937901M20-11		. . MODULE used on 001A, 001B, 001C, 001D, 001E, 001F		002
170A	NSA937901M20-08		. . MODULE used on 001A, 001B, 001C, 001D, 001E, 001F		001
180A	NSA937901R0060		. . RAIL used on 001A, 001B, 001C, 001D, 001E, 001F		001
190A	NSA937901S		. . CLAMP-END used on 001A, 001B, 001C, 001D, 001E, 001F		002
200A	E0616BB2000		. . PLUG used on 001A, 001B, 001C, 001D, 001E, 001F		035
210A	E0053R10B6SNE		. . CONNECTOR-RECEPTACLE used on 001A, 001B, 001C, 001D, 001E, 001F		001
220A	ABS0638C10		. . BACKSHELL-CONNECTOR used on 001A, 001B, 001C, 001D, 001E, 001F		001
230A	A292500300-202		. . BRACKET used on 001A, 001B, 001C, 001D, 001E, 001F		001
240A	MS21042-04		. . NUT used on 001A, 001B, 001C, 001D, 001E, 001F		004

- ITEM NOT ILLUSTRATED

FIG. ITEM	PART NUMBER	AIRLINE STOCK NUMBER	NOMENCLATURE 1234567	EFF CODE	UNITS PER ASSY
-250A	E0274UD22U		. . CABLE REQUIRED LENGTH 2500 MM used on 001A, 001B, 001C, 001D, 001E, 001F		001
-260A	TMS3-32-10-9		. . SLEEVE-IDENTIFICATION used on 001A, 001B, 001C, 001D, 001E, 001F		054
-270A	TMS3-16-10-9		. . SLEEVE-IDENTIFICATION used on 001A, 001B, 001C, 001D, 001E, 001F		004
280A	NSA935401-04		. . TIE-CABLE used on 001A, 001B, 001C, 001D, 001E, 001F		008
290A	E0052R14B12SNE		. . CONNECTOR-PLUG used on 001A, 001B, 001C, 001D, 001E, 001F		001
300A	ABS0638A14		. . BACKSHELL-CONNECTOR used on 001A, 001B, 001C, 001D, 001E, 001F		001
-310A	NSA935805-04		. . ELECTRICAL CONDUIT REQUIRED LENGTH 300 MM used on 001A, 001B, 001C, 001D, 001E, 001F		001
-320A	NSA935805-06		. . ELECTRICAL CONDUIT REQUIRED LENGTH 300 MM used on 001A, 001B, 001C, 001D, 001E, 001F		001
-330A	NSA935805-09		. . ELECTRICAL CONDUIT REQUIRED LENGTH 3700 MM used on 001A, 001B, 001C, 001D, 001E, 001F		001

- ITEM NOT ILLUSTRATED

FIG. ITEM	PART NUMBER	AIRLINE STOCK NUMBER	NOMENCLATURE 1234567	EFF CODE	UNITS PER ASSY
-340A	NSA935805-12		. . ELECTRICAL CONDUIT REQUIRED LENGTH 1200 MM used on 001A, 001B, 001C, 001D, 001E, 001F		001
-350A	NSA935805-16		. . ELECTRICAL CONDUIT REQUIRED LENGTH 300 MM used on 001A, 001B, 001C, 001D, 001E, 001F		001
-360A	E0126-04B		. . TUBING-HEAT-SHRINKABLE REQUIRED LENGTH 1000 MM used on 001A, 001B, 001C, 001D, 001E, 001F		001
-370A	RNF100-1-3-16-9		. . TUBING-HEAT-SHRINKABLE REQUIRED LENGTH 3700 MM used on 001A, 001B, 001C, 001D, 001E, 001F		001
-380A	E0126-05B		. . TUBING-HEAT-SHRINKABLE REQUIRED LENGTH 750 MM used on 001A, 001B, 001C, 001D, 001E, 001F		001
-390A	NSA938151PA2000		. . CONTACT-PIN BUY PN EN3155-018M2018 used on 001A, 001B, 001C, 001D, 001E, 001F		055
400A	E0053R22B55PNE		. . CONNECTOR-RECEPTACLE used on 001A, 001B, 001C, 001D, 001E, 001F		001
410A	ABS0638C22		. . BACKSHELL-CONNECTOR used on 001A, 001B, 001C, 001D, 001E, 001F		001

- ITEM NOT ILLUSTRATED

FIG. ITEM	PART NUMBER	AIRLINE STOCK NUMBER	NOMENCLATURE 1234567	EFF CODE	UNITS PER ASSY
420A	A292500300-204		. . BRACKET used on 001A, 001B, 001C, 001D, 001E, 001F		001
430A	NAS1100-04-5		. . SCREW used on 001A, 001B, 001C, 001D, 001E, 001F		004
-440A	E0264PF22		. . CABLE REQUIRED LENGTH 3550 MM used on 001A, 001B, 001C, 001D, 001E, 001F		001
450A	E0248A2-4H9		. . LABEL used on 001A, 001B, 001C, 001D, 001E, 001F		002
460A	TMS3-4-10-9		. . SLEEVE-IDENTIFICATION used on 001A, 001B, 001C, 001D, 001E, 001F		001
470A	NSA935401-03		. . TIE-CABLE used on 001A, 001B, 001C, 001D, 001E, 001F		040
-480A	E0261CF18U		. . CABLE REQUIRED LENGTH 31500 MM BUY PN EN2267-010A010S used on 001A, 001B, 001C, 001D, 001E, 001F		001
-490A	E0261CF20U		. . CABLE REQUIRED LENGTH 27000 MM BUY PN EN2267-010A006S used on 001A, 001B, 001C, 001D, 001E, 001F		001

- ITEM NOT ILLUSTRATED

FIG. ITEM	PART NUMBER	AIRLINE STOCK NUMBER	NOMENCLATURE 1234567	EFF CODE	UNITS PER ASSY
-500A	E0261CF22		. . CABLE REQUIRED LENGTH 52000 MM BUY PN EN2267-010A004S used on 001A, 001B, 001C, 001D, 001E, 001F		001
-510A	E0272TK22U		. . CABLE REQUIRED LENGTH 8700 MM used on 001A, 001B, 001C, 001D, 001E, 001F		001
-520A	NSA936603CC0100		. . CAP used on 001A, 001C, 001E, 001F		002
530A	E0237E09S03A		. . CONNECTOR BUY PN E0237E09S03B used on 001B, 001D, 001E, 001F		001
540A	ABS0656A1B1		. . LATCH-SPRING used on 001B, 001D, 001E, 001F		002
550A	ABS0388B09A		. . BACKSHELL used on 001B, 001D, 001E, 001F		001
560A	E0396DV2001		. . CONTACT-SOCKET used on 001B, 001D, 001E, 001F		009

- ITEM NOT ILLUSTRATED

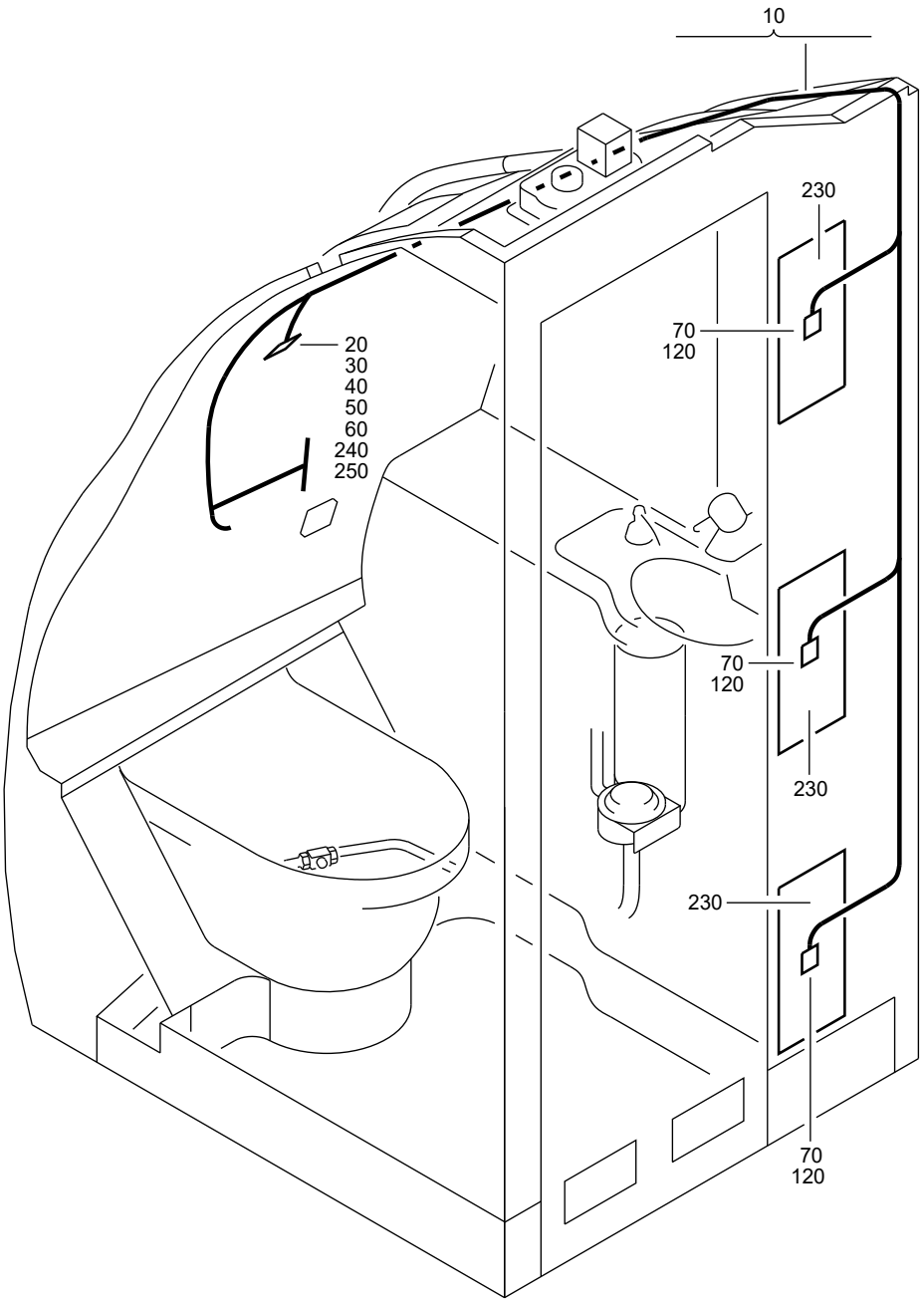

F_PL_254151_31_0_01_00

ELECTRICAL SYSTEM-COCKPIT DOOR LOCKING
Figure 31/EN254151SHEET31001

FIG. ITEM	PART NUMBER	AIRLINE STOCK NUMBER	NOMENCLATURE 1234567	EFF CODE	UNITS PER ASSY
31 -001A	D9250000000085		. ELECTRICAL SYSTEM-COCK-PIT DOOR LOCKING NP used on 210A (25415141V), 210A (25415141W), 210A (25415141X), 210A (25415141Y), 210A (25415141Z), 210A (254151420), 210A (25415142A) SEE 25-41-51-41V FOR NHA SEE 25-41-51-41W FOR NHA SEE 25-41-51-41X FOR NHA SEE 25-41-51-41Y FOR NHA SEE 25-41-51-41Z FOR NHA SEE 25-41-51-420 FOR NHA SEE 25-41-51-42A FOR NHA		RF
010A	A292901304-002		. . HARNESS ASSY-CABLE used on 001A		001
020A	E0053R16B26PNF		. . . CONNECTOR-RECEPTACLE BUY PN E0053R16B26PNE used on 010A		001
030A	A292500300-222		. . . BRACKET used on 010A		001
040A	NAS1102-04-6		. . . SCREW used on 010A		002
050A	MS21042-04		. . . NUT used on 010A		002
060A	ABS0638C16		. . . BACKSHELL-CONNECTOR used on 010A		001
070A	NSA935402-51		. . . TIE-IDENTIFICATION used on 010A		003

- ITEM NOT ILLUSTRATED

FIG. ITEM	PART NUMBER	AIRLINE STOCK NUMBER	NOMENCLATURE 1234567	EFF CODE	UNITS PER ASSY
-080A	E0126-04B		. . . TUBING-HEAT-SHRINKABLE USE AS REQUIRED REQUIRED LENGTH 1900 MM used on 010A		AR
-090A	E0126-05B		. . . TUBING-HEAT-SHRINKABLE USE AS REQUIRED REQUIRED LENGTH 1200 MM used on 010A		AR
-100A	ABS0237-03		. . . SLEEVE-SOLDER used on 010A		003
-110A	TMS1-8-10-9		. . . SLEEVE-IDENTIFICATION USE AS REQUIRED used on 010A		AR
120A	TMS1-2-10-9		. . . SLEEVE-IDENTIFICATION used on 010A		003
230A	D2528641122200		. . SHEET-SPRING used on 001A		033
240A	NAS1096-2-7		. . SCREW BUY PN NAS1801-08-7 used on 001A		002
250A	NAS1149CN832R		. . WASHER used on 001A		002

- ITEM NOT ILLUSTRATED

THIS PAGE IS INTENTIONALLY LEFT BLANK

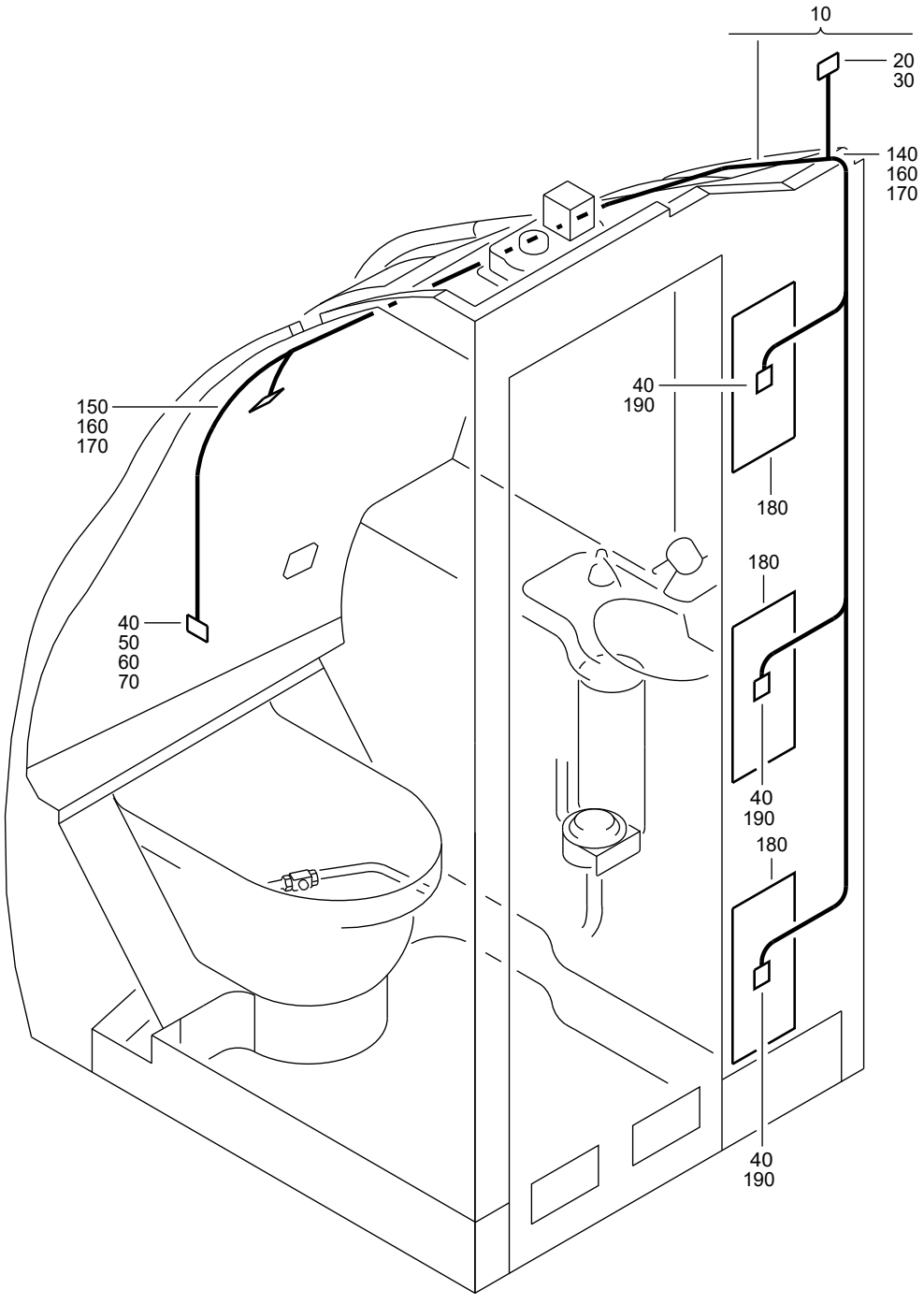

F_PL_254151_31_A_01_00

ELECTRICAL SYSTEM-COCKPIT DOOR LOCKING
Figure 31A/EN254151SHEET31A01

FIG. ITEM	PART NUMBER	AIRLINE STOCK NUMBER	NOMENCLATURE 1234567	EFF CODE	UNITS PER ASSY
31A					
-001A	D9250000000185		. ELECTRICAL SYSTEM-COCK- NP PIT DOOR LOCKING used on 210B (25415141Z), 210B (254151420), 210B(25415142A), 210A (25415142B), 210A (25415142C), 210A(25415142D), 210A (25415142E), 210A (25415142F), 210B(25415142G), 210B (25415142K) SEE 25-41-51-41Z FOR NHA SEE 25-41-51-420 FOR NHA SEE 25-41-51-42A FOR NHA SEE 25-41-51-42B FOR NHA SEE 25-41-51-42C FOR NHA SEE 25-41-51-42D FOR NHA SEE 25-41-51-42E FOR NHA SEE 25-41-51-42F FOR NHA SEE 25-41-51-42G FOR NHA SEE 25-41-51-42K FOR NHA		RF
010A	A292901390-000		. . HARNESS ASSY-CABLE used on 001A		001
020A	E0052R20B41PNE		. . . CONNECTOR-PLUG used on 010A		001
030A	ABS0638A20		. . . BACKSHELL-CONNECTOR used on 010A		001
040A	NSA935401-03		. . . TIE-CABLE used on 010A		033
050A	E0237E15S03A		. . . CONNECTOR-RECEPTACLE BUY PN E0237E15S03B used on 010A		001
060A	ABS0388B15A		. . . BACKSHELL used on 010A		001

- ITEM NOT ILLUSTRATED

FIG. ITEM	PART NUMBER	AIRLINE STOCK NUMBER	NOMENCLATURE 1234567	EFF CODE	UNITS PER ASSY
070A	NSA938421-07		. . . SCREW-COUPLING used on 010A		002
-080A	E0126-04B		. . . TUBING-HEAT-SHRINKABLE USE AS REQUIRED REQUIRED LENGTH 1950 MM used on 010A		AR
-090A	E0126-05B		. . . TUBING-HEAT-SHRINKABLE USE AS REQUIRED REQUIRED LENGTH 2110 MM used on 010A		AR
-100A	ABS0237-03		. . . SLEEVE-SOLDER used on 010A		003
-110A	TMS3-32-10-9		. . . SLEEVE-IDENTIFICATION used on 010A		052
-120A	TMS3-4-10-9		. . . SLEEVE-IDENTIFICATION used on 010A		001
-130A	TMS1-8-10-9		. . . SLEEVE-IDENTIFICATION used on 010A		010
140A	NSA935807-16		. . CLAMP used on 001A		001
150A	MS21919WCH6		. . CLAMP BUY PN AS21919WCH06 used on 001A		001
160A	NAS1096-2-4		. . SCREW BUY PN NAS1801-08-4 used on 001A		002
170A	NAS1149CN832R		. . WASHER used on 001A		002
180A	D2528641124000		. . SHEET-SPRING used on 001A		033

- ITEM NOT ILLUSTRATED

FIG. ITEM	PART NUMBER	AIRLINE STOCK NUMBER	NOMENCLATURE 1234567	EFF CODE	UNITS PER ASSY
190A	TMS1-2-10-9		. . SLEEVE-IDENTIFICATION used on 001A		003

- ITEM NOT ILLUSTRATED

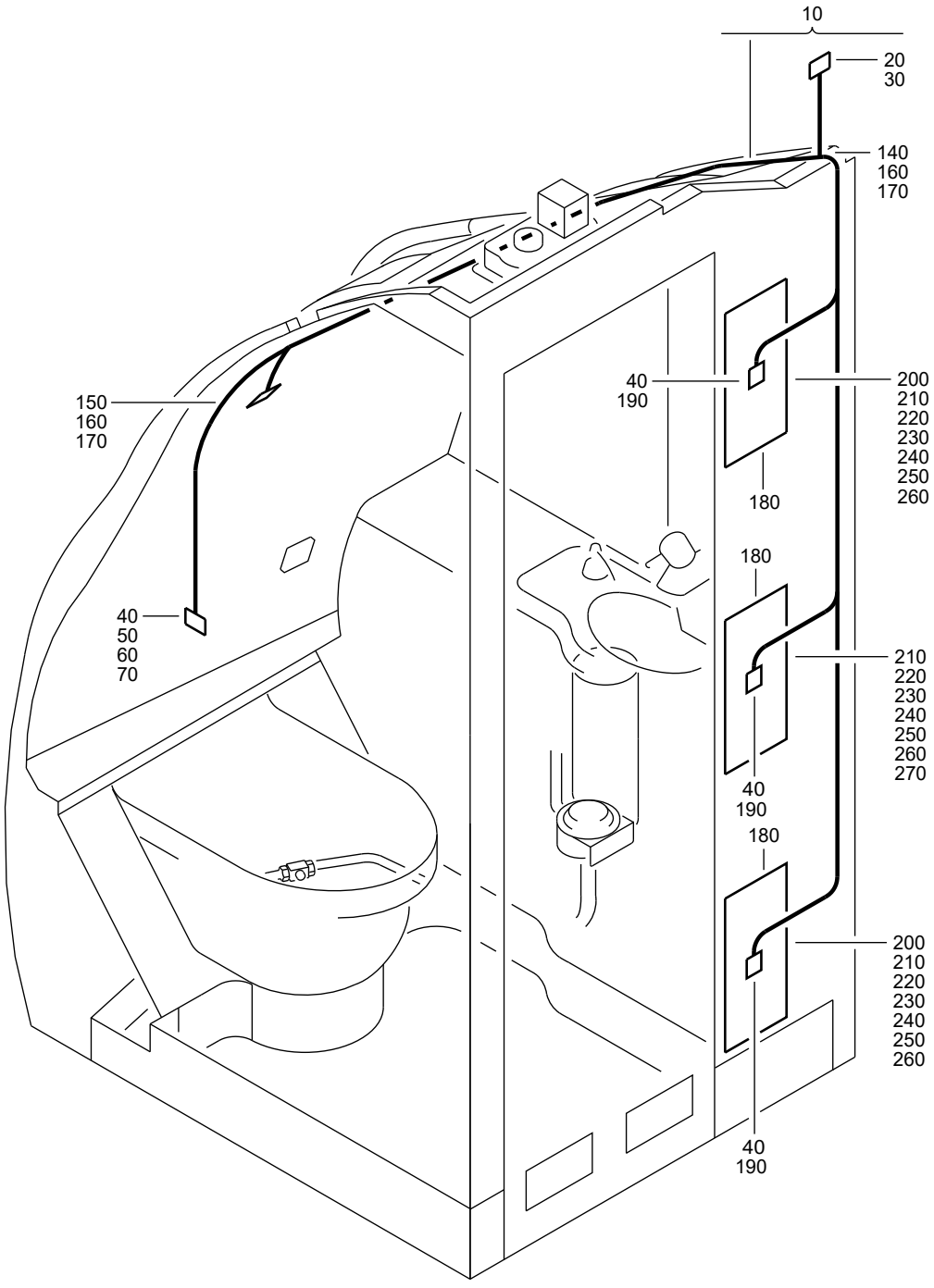

F_PL_254151_31_B_01_00

ELECTRICAL SYSTEM-COCKPIT DOOR LOCKING
Figure 31B/EN254151SHEET31B01

FIG. ITEM	PART NUMBER	AIRLINE STOCK NUMBER	NOMENCLATURE 1234567	EFF CODE	UNITS PER ASSY
31B					
-001A	D9250000000285		. ELECTRICAL SYSTEM-COCK-PIT DOOR LOCKING NP used on 210A (25415141M), 210B (25415142B), 210B (25415142E), 210B (25415142F), 210A (25415142G), 210A (25415142H), 210A (25415142J), 210A (25415142K), 210A (25415142L), 210A (25415142M), 210A (25415142N), 210A(25415142P), 210A (25415142Q), 210A (25415142R), 210B(25415142S), 210A (25415142T), 210B (25415142U) SEE 25-41-51-41M FOR NHA SEE 25-41-51-42B FOR NHA SEE 25-41-51-42E FOR NHA SEE 25-41-51-42F FOR NHA SEE 25-41-51-42G FOR NHA SEE 25-41-51-42H FOR NHA SEE 25-41-51-42J FOR NHA SEE 25-41-51-42K FOR NHA SEE 25-41-51-42L FOR NHA SEE 25-41-51-42M FOR NHA SEE 25-41-51-42N FOR NHA SEE 25-41-51-42P FOR NHA SEE 25-41-51-42Q FOR NHA SEE 25-41-51-42R FOR NHA SEE 25-41-51-42S FOR NHA SEE 25-41-51-42T FOR NHA SEE 25-41-51-42U FOR NHA		RF
010A	A292901390-000		. . HARNESS ASSY-CABLE used on 001A		001
020A	E0052R20B41PNE		. . . CONNECTOR-PLUG used on 010A		001

- ITEM NOT ILLUSTRATED

FIG. ITEM	PART NUMBER	AIRLINE STOCK NUMBER	NOMENCLATURE 1234567	EFF CODE	UNITS PER ASSY
030A	ABS0638A20		. . . BACKSHELL-CONNECTOR used on 010A		001
040A	NSA935401-03		. . . TIE-CABLE used on 010A		033
050A	E0237E15S03A		. . . CONNECTOR-RECEPTACLE BUY PN E0237E15S03B used on 010A		001
060A	ABS0388B15A		. . . BACKSHELL used on 010A		001
070A	NSA938421-07		. . . SCREW-COUPLING used on 010A		002
-080A	E0126-04B		. . . TUBING-HEAT-SHRINKABLE USE AS REQUIRED REQUIRED LENGTH 1950 MM used on 010A		AR
-090A	E0126-05B		. . . TUBING-HEAT-SHRINKABLE USE AS REQUIRED REQUIRED LENGTH 2110 MM used on 010A		AR
-100A	ABS0237-03		. . . SLEEVE-SOLDER used on 010A		003
-110A	TMS3-32-10-9		. . . SLEEVE-IDENTIFICATION used on 010A		052
-120A	TMS3-4-10-9		. . . SLEEVE-IDENTIFICATION used on 010A		001
-130A	TMS1-8-10-9		. . . SLEEVE-IDENTIFICATION used on 010A		010
140A	NSA935807-16		. . CLAMP used on 001A		001

- ITEM NOT ILLUSTRATED

FIG. ITEM	PART NUMBER	AIRLINE STOCK NUMBER	NOMENCLATURE 1234567	EFF CODE	UNITS PER ASSY
150A	MS21919WCH6		. . CLAMP BUY PN AS21919WCH06 used on 001A		001
160A	NAS1096-2-4		. . SCREW BUY PN NAS1801-08-4 used on 001A		002
170A	NAS1149CN832R		. . WASHER used on 001A		002
180A	D2528641124000		. . SHEET-SPRING used on 001A		033
200A	AR4714-1		. . STRIKE-ELECTRIC used on 001A		002
210A	A225401237-222		. . SHEET used on 001A		003
220A	A225401237-224		. . SHEET used on 001A		003
230A	EN6049-006-08-5		. . SLEEVE-PROTECTIVE USE AS REQUIRED REQUIRED LENGTH 3000 MM used on 001A		AR
240A	NAS1102-3-12		. . SCREW used on 001A		006
250A	NAS1102-3-8		. . SCREW used on 001A		003
260A	MS35489-33		. . GROMMET used on 001A		003
270A	AR4714-3		. . STRIKE-ELECTRIC,CTR used on 001A		001

- ITEM NOT ILLUSTRATED

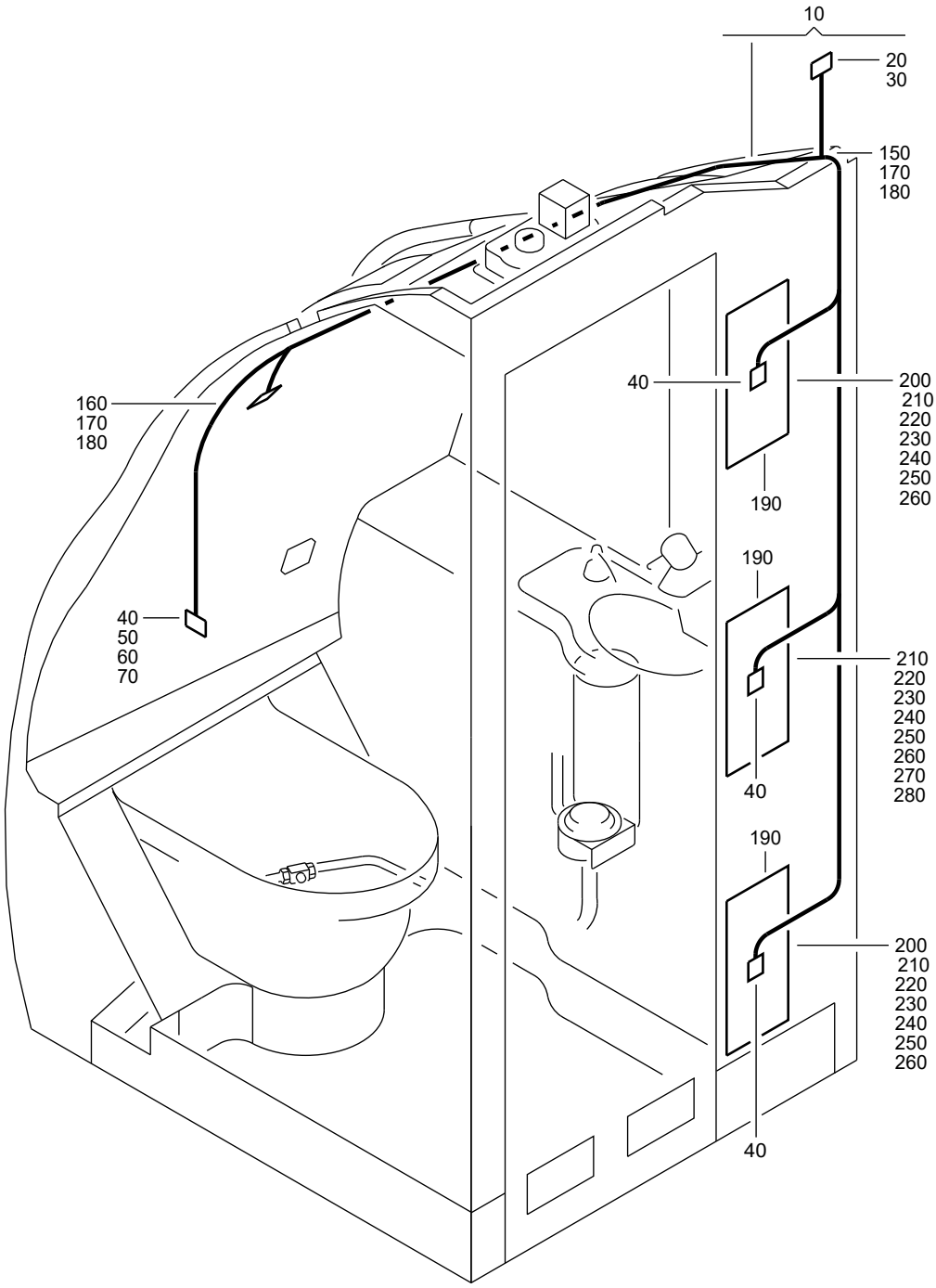

F_PL_254151_31_C_01_00

ELECTRICAL SYSTEM-COCKPIT DOOR LOCKING
Figure 31C/EN254151SHEET31C01

FIG. ITEM	PART NUMBER	AIRLINE STOCK NUMBER	NOMENCLATURE 1234567	EFF CODE	UNITS PER ASSY
31C					
-001A	D9250000000385		. ELECTRICAL SYSTEM-COCK-PIT DOOR LOCKING NP used on 210C (25415142K) SEE 25-41-51-42K FOR NHA		RF
-001B	D9250000000485		. ELECTRICAL SYSTEM-COCK-PIT DOOR LOCKING NP used on 210B (25415142Q) SEE 25-41-51-42Q FOR NHA		RF
-001C	D9250000000585		. ELECTRICAL SYSTEM-COCK-PIT DOOR LOCKING NP used on 210D (25415142K), 210B (25415142P), 210C (25415142Q), 210B (25415142R), 210A (25415142S), 210B(25415142T), 210A (25415142U) SEE 25-41-51-42K FOR NHA SEE 25-41-51-42P FOR NHA SEE 25-41-51-42Q FOR NHA SEE 25-41-51-42R FOR NHA SEE 25-41-51-42S FOR NHA SEE 25-41-51-42T FOR NHA SEE 25-41-51-42U FOR NHA		RF
-001D	D9250000000685		. ELECTRICAL SYSTEM-COCK-PIT DOOR LOCKING NP used on 210C (25415142G), 210D (25415142Q), 210C (25415142R) SEE 25-41-51-42G FOR NHA SEE 25-41-51-42Q FOR NHA SEE 25-41-51-42R FOR NHA		RF

- ITEM NOT ILLUSTRATED

FIG. ITEM	PART NUMBER	AIRLINE STOCK NUMBER	NOMENCLATURE 1234567	EFF CODE	UNITS PER ASSY
-001E	D2528641500485		. ELECTRICAL SYSTEM-COCK- PIT DOOR LOCKING NP POST SB 25-1473 used on 210C (25415142S) SEE 25-41-51-42S FOR NHA		RF
010A	A292901390-004		. . HARNESS ASSY-CABLE used on 001A		001
010B	A292901390-000		. . HARNESS ASSY-CABLE used on 001B, 001C, 001D, 001E		001
020A	E0052R20B41PNE		. . . CONNECTOR-PLUG used on 010A, 010B		001
030A	ABS0638A20		. . . BACKSHELL-CONNECTOR used on 010A, 010B		001
040A	NSA935401-03		. . . TIE-CABLE used on 010A, 010B		033
050A	E0237E15S03A		. . . CONNECTOR-RECEPTACLE BUY PN E0237E15S03B used on 010A, 010B		001
060A	ABS0388B15A		. . . BACKSHELL used on 010A, 010B		001
070A	NSA938421-07		. . . SCREW-COUPLING used on 010A, 010B		002
-080A	E0126-04B		. . . TUBING-HEAT-SHRINKABLE USE AS REQUIRED used on 010A, 010B		AR
-090A	E0126-05B		. . . TUBING-HEAT-SHRINKABLE USE AS REQUIRED used on 010A, 010B		AR

- ITEM NOT ILLUSTRATED

FIG. ITEM	PART NUMBER	AIRLINE STOCK NUMBER	NOMENCLATURE 1234567	EFF CODE	UNITS PER ASSY
-100A	ABS0237-03		. . . SLEEVE-SOLDER used on 010A, 010B		009
-110A	TMS3-16-10-9		. . . SLEEVE-IDENTIFICATION used on 010A, 010B		003
-120A	TMS3-4-10-9		. . . SLEEVE-IDENTIFICATION used on 010A, 010B		001
-130A	TMS1-8-10-9		. . . SLEEVE-IDENTIFICATION used on 010A, 010B		004
-140A	TMS3-8-10-9		. . . SLEEVE-IDENTIFICATION used on 010A, 010B		006
150A	NSA935807-16		. . CLAMP used on 001A, 001B, 001C, 001D, 001E		001
160A	MS21919WCH6		. . CLAMP BUY PN AS21919WCH06 used on 001A, 001B, 001C, 001D, 001E		001
170A	NAS1096-2-4		. . SCREW BUY PN NAS1801-08-4 used on 001A, 001B, 001C, 001D, 001E		002
180A	NAS1149CN832R		. . WASHER used on 001A, 001B, 001C, 001D, 001E		002
190A	D2528641124000		. . SHEET-SPRING used on 001A, 001B, 001C, 001D, 001E		033
200A	AR4714-1		. . STRIKE-ELECTRIC used on 001A, 001B, 001C, 001D, 001E		002

- ITEM NOT ILLUSTRATED

FIG. ITEM	PART NUMBER	AIRLINE STOCK NUMBER	NOMENCLATURE 1234567	EFF CODE	UNITS PER ASSY
210A	A225401237-222		. . SHEET used on 001A, 001B, 001C, 001D, 001E		003
220A	A225401237-224		. . SHEET used on 001A, 001B, 001C, 001D, 001E		003
230A	EN6049-006-08-5		. . SLEEVE-PROTECTIVE USE AS REQUIRED used on 001A, 001B, 001C, 001D, 001E		AR
240A	NAS1102-3-12		. . SCREW used on 001A, 001B, 001C, 001D, 001E		006
250A	NAS1102-3-8		. . SCREW used on 001A, 001B, 001C, 001D, 001E		003
260A	MS35489-33		. . GROMMET used on 001A, 001B, 001C, 001D, 001E		003
270A	AR4714-3		. . STRIKE-ELECTRIC,CTR used on 001A, 001B, 001C, 001D, 001E		001
280A	D2528641500000		. . BOLT ASSY-DEAD used on 001A, 001B		001
-280B	D2528641500200		. . BOLT ASSY-DEAD used on 001C		001
-280C	D2528641500400		. . BOLT ASSY-DEAD POST SB 25-1473 used on 001C, 001D, 001E		001

- ITEM NOT ILLUSTRATED

FIG. ITEM	PART NUMBER	AIRLINE STOCK NUMBER	NOMENCLATURE 1234567	EFF CODE	UNITS PER ASSY
-290A	D2528641200800		. . . SLIDER-CDLS used on 280A, 280B		001
-290B	D2528641201600		. . . SLIDER-CDLS used on 280C		001
-300A	D2528641201000		. . . BAR-LOCK used on 280A		001
-300B	D2528641201400		. . . BAR-LOCK used on 280B, 280C		001
-310A	D2528641201200		. . . BOLT-DEAD used on 280A, 280B, 280C		001
-320A	D2528641224400		. . . BUSHING used on 280A, 280B, 280C		001
-330A	D2528641225200		. . . WASHER used on 280A, 280B, 280C		001
-340A	D2528641224600		. . . PIN used on 280A, 280B, 280C		001
-350A	MS21042-3		. . . NUT used on 280A, 280B, 280C		001
-360A	NAS1149D0332K		. . . WASHER used on 280A, 280B, 280C		001
-370A	6TBD101761		. . . SPRINGDIN2098-0-8X6-3X15-5 used on 280A, 280B, 280C		001
-380A	NAS1102-3-12		. . . SCREW used on 280A, 280B, 280C		001
-390A	D2528874820000		. . . SPRING used on 280A, 280B, 280C		001

- ITEM NOT ILLUSTRATED

FIG. ITEM	PART NUMBER	AIRLINE STOCK NUMBER	NOMENCLATURE 1234567	EFF CODE	UNITS PER ASSY
-400A	D2528641225000		. . . SCREW used on 280A, 280B, 280C		001

- ITEM NOT ILLUSTRATED

THIS PAGE IS INTENTIONALLY LEFT BLANK

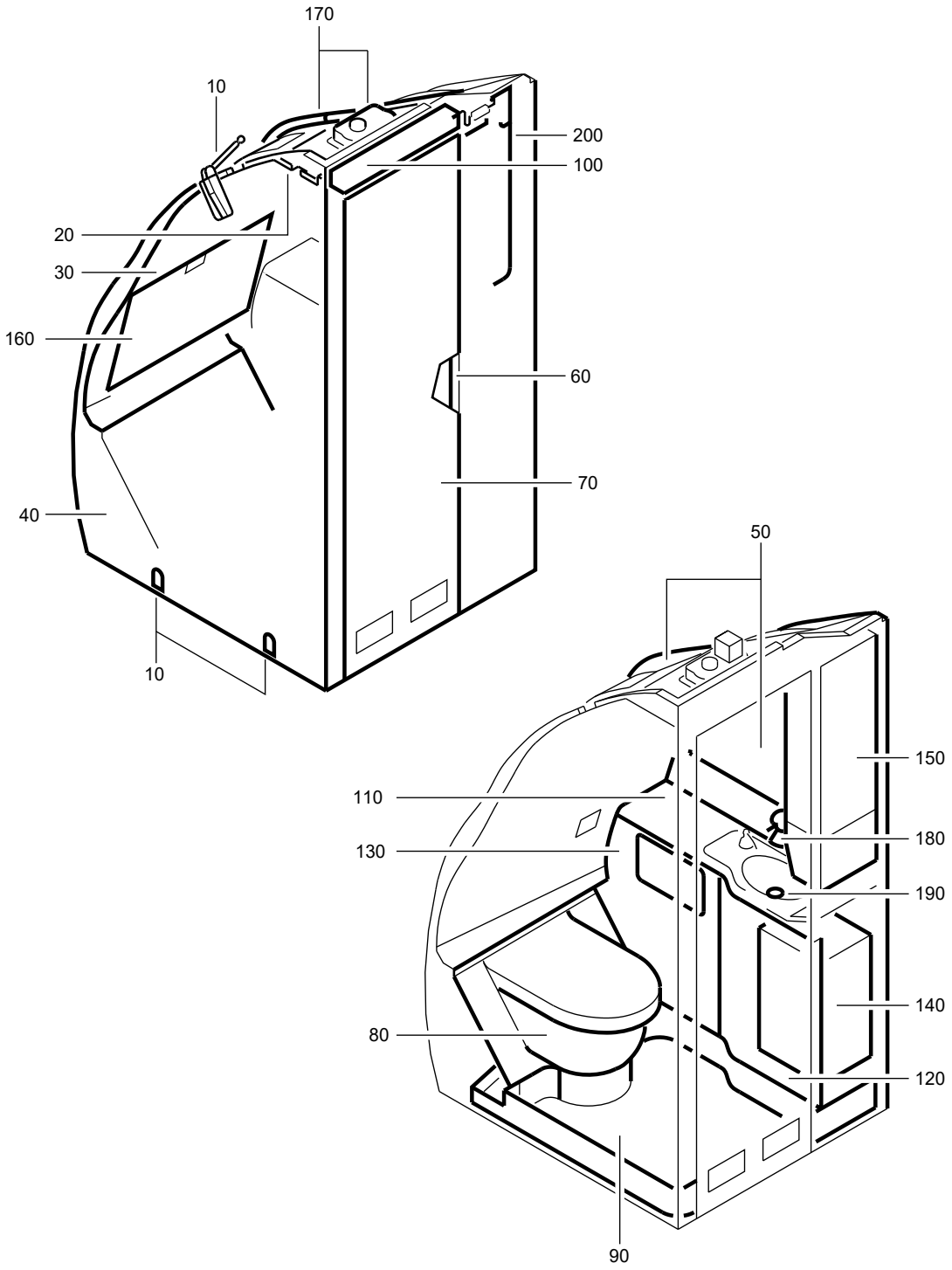

F_PL_254151_41_0_01_00

LAVATORY A ASSY
Figure 41/EN254151SHEET41001

FIG. ITEM	PART NUMBER	AIRLINE STOCK NUMBER	NOMENCLATURE 1234567	EFF CODE	UNITS PER ASSY
41					
-001A	D2549020707800		. LAVATORY A ASSY SEE SIL 25-117 FOR DET		RF
-001B	D2549020705200		. LAVATORY A ASSY PRE VSB A2-254-25-042 SEE SIL 25-117 FOR DET		RF
-001C	D2549020707200		. LAVATORY A ASSY SEE SIL 25-117 FOR DET		RF
-001D	D2549020706400		. LAVATORY A ASSY SEE SIL 25-117 FOR DET VSB A2-254-25-032		RF
-001E	D2549010603200		. LAVATORY A ASSY SEE SIL 25-117 FOR DET		RF
-001F	D2549010603600		. LAVATORY A ASSY SEE SIL 25-117 FOR DET		RF
-001G	D2549020707400		. LAVATORY A ASSY SEE SIL 25-117 FOR DET		RF
-001H	D2549020702400		. LAVATORY A ASSY PRE VSB A2-254-25-131 SEE SIL 25-117 FOR DET		RF
-001J	D2549030601000		. LAVATORY A ASSY SEE SIL 25-117 FOR DET		RF
-001K	D2549030514800		. LAVATORY A ASSY SEE SIL 25-117 FOR DET		RF
-001L	D2549020600400		. LAVATORY A ASSY SEE SIL 25-117 FOR DET PRE VSB A2-254-25-036		RF
-001M	D2549020611600		. LAVATORY A ASSY SEE SIL 25-117 FOR DET		RF

- ITEM NOT ILLUSTRATED

FIG. ITEM	PART NUMBER	AIRLINE STOCK NUMBER	NOMENCLATURE 1234567		EFF CODE	UNITS PER ASSY
-001N	D2549030514800		. LAVATORY A ASSY SEE SIL 25-117 FOR DET			RF
-001P	R225401196-000		. LAVATORY A ASSY PRE VSB A2-254-25-130 POST VSB A2-254-25-042 SEE SIL 25-117 FOR DET			RF
-001Q	R225401128-000		. LAVATORY A ASSY SEE SIL 25-117 FOR DET POST VSB A2-254-25-036			RF
-001R	R225401137-014		. LAVATORY A ASSY POST VSB A2-254-25-131			RF
-001S	R225401196-046		. LAVATORY A ASSY POST VSB A2-254-25-130 SEE SIL 25-117 FOR DET			RF
010A	D2549030514661		. . ATTACHMENT-LAVATORY used on 001A, 001C, 001E, 001J SEE 25-41-51-02A FOR DET	NP		001
-010B	D2549020700461		. . ATTACHMENT-LAVATORY PRE VSB A2-254-25-130 used on 001B, 001H, 001P, 001R SEE 25-41-51-02A FOR DET	NP		001
-010C	D2549020700061		. . ATTACHMENT-LAVATORY used on 001G SEE 25-41-51-02A FOR DET	NP		001
-010D	D2549030514861		. . ATTACHMENT-LAVATORY used on 001K, 001N SEE 25-41-51-02A FOR DET	NP		001
-010E	D2549020600461		. . ATTACHMENT-LAVATORY used on 001L, 001Q SEE 25-41-51-020 FOR DET	NP		001

- ITEM NOT ILLUSTRATED

FIG. ITEM	PART NUMBER	AIRLINE STOCK NUMBER	NOMENCLATURE 1234567		EFF CODE	UNITS PER ASSY
-010F	D2549020610061		. . ATTACHMENT-LAVATORY used on 001M SEE 25-41-51-02D FOR DET	NP		001
-010G	D2549020705861		. . ATTACHMENT-LAVATORY POST SB 25-1312 used on 001F SEE 25-41-51-02D FOR DET	NP		001
-010H	D2549010610061		. . ATTACHMENT-LAVATORY POST SB 25-1289 used on 001D SEE 25-41-51-02D FOR DET	NP		001
-010J	R22540119604661		. . ATTACHMENT-LAVATORY POST VSB A2-254-25-130 used on 001S SEE 25-41-51-02A FOR DET	NP		001
020A	D2549020602663		. . PANEL-CEILING PRE VSB A2-254-25-130 used on 001A, 001B, 001C, 001D, 001E, 001F, 001H, 001J, 001K, 001M, 001N, 001P, 001R SEE 25-41-51-040 FOR DET	NP		001
-020B	D2549020610263		. . PANEL-CEILING used on 001G SEE 25-41-51-040 FOR DET	NP		001
-020C	D2549020600463		. . PANEL-CEILING used on 001L, 001Q SEE 25-41-51-040 FOR DET	NP		001
-020D	R22540119604663		. . PANEL-CEILING POST VSB A2-254-25-130 used on 001S SEE 25-41-51-040 FOR DET	NP		001

- ITEM NOT ILLUSTRATED

FIG. ITEM	PART NUMBER	AIRLINE STOCK NUMBER	NOMENCLATURE 1234567	EFF CODE	UNITS PER ASSY
030A	D2549010512664		. . WALL-REAR NP PRE VSB A2-254-25-130 used on 001A, 001B, 001C, 001F, 001H, 001J, 001K, 001N, 001P, 001R SEE 25-41-51-05B FOR DET		001
-030B	D2549020614864		. . WALL-REAR NP used on 001E SEE 25-41-51-05D FOR DET		001
-030C	D2549020612264		. . WALL-REAR NP used on 001G SEE 25-41-51-05C FOR DET		001
-030D	D2549020600464		. . WALL-REAR NP used on 001L, 001Q SEE 25-41-51-05A FOR DET		001
-030E	D2549020611664		. . WALL-REAR NP used on 001D, 001M SEE 25-41-51-05A FOR DET		001
-030F	R22540119604664		. . WALL-REAR NP POST VSB A2-254-25-130 used on 001S SEE 25-41-51-05B FOR DET		001
040A	D2549020700465		. . WALL-SIDE NP used on 001J SEE 25-41-51-06N FOR DET		001
-040B	D2549020703465		. . WALL-SIDE NP PRE VSB A2-254-25-042 used on 001B SEE 25-41-51-06P FOR DET		001
-040C	D2549020707265		. . WALL-SIDE NP used on 001C SEE 25-41-51-06Q FOR DET		001

- ITEM NOT ILLUSTRATED

FIG. ITEM	PART NUMBER	AIRLINE STOCK NUMBER	NOMENCLATURE 1234567	EFF CODE	UNITS PER ASSY
-040D	D2549010514265		. . WALL-SIDE NP POST SB 25-1289 PRE VSB A2-254-25-032 used on 001D SEE 25-41-51-48E FOR DET		001
-040E	D2549010601265		. . WALL-SIDE NP used on 001E SEE 25-41-51-06M FOR DET		001
-040F	D2549010603665		. . WALL-SIDE NP used on 001F SEE 25-41-51-06Q FOR DET		001
-040G	D2549020612265		. . WALL-SIDE NP used on 001G SEE 25-41-51-06L FOR DET		001
-040H	D2549020703265		. . WALL-SIDE NP used on 001H, 001R SEE 25-41-51-06M FOR DET		001
-040J	D2549030511065		. . WALL-SIDE NP used on 001K, 001N SEE 25-41-51-06N FOR DET		001
-040K	D2549020600465		. . WALL-SIDE NP used on 001L SEE 25-41-51-06C FOR DET PRE VSB A2-254-25-036		001
-040L	D2549020611665		. . WALL-SIDE NP used on 001M SEE 25-41-51-06J FOR DET		001
-040M	D2549020707865		. . WALL-SIDE NP used on 001A SEE 25-41-51-06N FOR DET		001

- ITEM NOT ILLUSTRATED

FIG. ITEM	PART NUMBER	AIRLINE STOCK NUMBER	NOMENCLATURE 1234567		EFF CODE	UNITS PER ASSY
-040N	R22540115200065		. . WALL-SIDE PRE VSB A2-254-25-130 POST VSB A2-254-25-042 used on 001P SEE 25-41-51-06P FOR DET	NP		001
-040P	D2549010514265		. . WALL-SIDE used on 001D SEE 25-41-51-48E FOR DET POST VSB A2-254-25-032	NP		001
-040Q	R22540112800065		. . WALL-SIDE used on 001Q SEE 25-41-51-06C FOR DET POST VSB A2-254-25-036	NP		001
-040R	R22540119604665		. . WALL-SIDE POST VSB A2-254-25-130 used on 001S SEE 25-41-51-06P FOR DET	NP		001
050A	D2549020607066		. . HOUSING used on 001J SEE 25-41-51-07Y FOR DET	NP		001
-050B	D2549020703466		. . HOUSING PRE VSB A2-254-25-130 used on 001B, 001P SEE 25-41-51-07G FOR DET	NP		001
-050C	D2549020707266		. . HOUSING used on 001C SEE 25-41-51-07G FOR DET	NP		001
-050D	D2549010601266		. . HOUSING used on 001E SEE 25-41-51-07F FOR DET	NP		001
-050E	D2549010603666		. . HOUSING used on 001F SEE 25-41-51-07G FOR DET	NP		001

- ITEM NOT ILLUSTRATED

FIG. ITEM	PART NUMBER	AIRLINE STOCK NUMBER	NOMENCLATURE 1234567		EFF CODE	UNITS PER ASSY
-050F	D2549020610266		. . HOUSING used on 001G SEE 25-41-51-07E FOR DET	NP		001
-050G	D2549030505266		. . HOUSING used on 001H, 001R SEE 25-41-51-07B FOR DET	NP		001
-050H	D2549030511066		. . HOUSING used on 001K, 001N SEE 25-41-51-07F FOR DET	NP		001
-050J	D2549020600466		. . HOUSING used on 001L, 001Q SEE 25-41-51-07A FOR DET	NP		001
-050K	D2549020611666		. . HOUSING used on 001M SEE 25-41-51-07E FOR DET	NP		001
-050L	D2549020706466		. . HOUSING used on 001D SEE 25-41-51-49C FOR DET	NP		001
-050M	D2549020708866		. . HOUSING used on 001A SEE 25-41-51-49B FOR DET	NP		001
-050N	R22540119604666		. . HOUSING POST VSB A2-254-25-130 used on 001S SEE 25-41-51-07G FOR DET	NP		001
060A	D2549010500069		. . DOOR INSTL used on 001B, 001C, 001E, 001F, 001G, 001H, 001J, 001K, 001L, 001M, 001N, 001P, 001Q, 001R, 001S SEE 25-41-51-100 FOR DET	NP		001

- ITEM NOT ILLUSTRATED

FIG. ITEM	PART NUMBER	AIRLINE STOCK NUMBER	NOMENCLATURE 1234567	EFF CODE	UNITS PER ASSY
-060B	D2549020401269		. . DOOR INSTL NP used on 001A, 001D SEE 25-41-51-10A FOR DET		001
070A	A225400276-942		. . DOOR ASSY-SINGLE used on 001J SEE 25-41-51-11F FOR DET		001
-070B	A225400276-952		. . DOOR ASSY-SINGLE PRE VSB A2-254-25-130 used on 001B, 001P SEE 25-41-51-11G FOR DET		001
-070C	A225400276-584		. . DOOR ASSY-SINGLE used on 001C SEE 25-41-51-11F FOR DET		001
-070D	A2254002768574		. . DOOR ASSY-SINGLE PRE VSB A2-254-25-032 used on 001D SEE 25-41-51-11N FOR DET		001
-070E	A225400276-924		. . DOOR ASSY-SINGLE used on 001E SEE 25-41-51-11E FOR DET		001
-070F	A225400276-596		. . DOOR ASSY-SINGLE used on 001F SEE 25-41-51-11G FOR DET		001
-070G	A225400276-940		. . DOOR ASSY-SINGLE used on 001G SEE 25-41-51-11F FOR DET		001
-070H	A225400276-586		. . DOOR ASSY-SINGLE used on 001H, 001R SEE 25-41-51-11E FOR DET		001
-070J	A225400276-580		. . DOOR ASSY-SINGLE used on 001K, 001N SEE 25-41-51-11F FOR DET		001

- ITEM NOT ILLUSTRATED

FIG. ITEM	PART NUMBER	AIRLINE STOCK NUMBER	NOMENCLATURE 1234567		EFF CODE	UNITS PER ASSY
-070K	A225400270-524		. . DOOR ASSY-SINGLE used on 001L, 001Q SEE 25-41-51-11A FOR DET			001
-070L	A225400276-554		. . DOOR ASSY-SINGLE used on 001M SEE 25-41-51-11D FOR DET			001
-070M	A2254002768942		. . DOOR ASSY-SINGLE used on 001A, 001J SEE 25-41-51-11F FOR DET			001
-070N	A2254002768574		. . DOOR ASSY-SINGLE POST VSB A2-254-25-032 used on 001D SEE 25-41-51-11N FOR DET			001
-070P	A225400263-990		. . DOOR ASSY-SINGLE POST VSB A2-254-25-130 used on 001S SEE 25-41-51-11G FOR DET			001
080A	D2549020607671		. . TOILET UNIT AND TOILET SHROUD used on 001A, 001J SEE 25-41-51-12C FOR DET	NP		001
-080B	D2549020604271		. . TOILET UNIT AND TOILET SHROUD PRE VSB A2-254-25-130 used on 001B, 001C, 001D, 001H, 001K, 001M, 001N, 001P, 001R SEE 25-41-51-12C FOR DET	NP		001
-080C	D2549010510471		. . TOILET UNIT AND TOILET SHROUD used on 001E SEE 25-41-51-12C FOR DET	NP		001

- ITEM NOT ILLUSTRATED

FIG. ITEM	PART NUMBER	AIRLINE STOCK NUMBER	NOMENCLATURE 1234567		EFF CODE	UNITS PER ASSY
-080D	D2549010603671		. . TOILET UNIT AND TOILET SHROUD used on 001F SEE 25-41-51-12E FOR DET	NP		001
-080E	D2549020610271		. . TOILET UNIT AND TOILET SHROUD used on 001G SEE 25-41-51-12C FOR DET	NP		001
-080F	D2549020600471		. . TOILET UNIT AND TOILET SHROUD used on 001L, 001Q SEE 25-41-51-12A FOR DET	NP		001
-080G	R22540119604671		. . TOILET UNIT AND TOILET SHROUD POST VSB A2-254-25-130 used on 001S SEE 25-41-51-12C FOR DET	NP		001
090A	D2549020604872		. . PAN-FLOOR used on 001J SEE 25-41-51-13C FOR DET	NP		001
-090B	D2549020704272		. . PAN-FLOOR PRE VSB A2-254-25-130 used on 001B, 001P SEE 25-41-51-13D FOR DET	NP		001
-090C	D2549030504072		. . PAN-FLOOR used on 001C SEE 25-41-51-13B FOR DET	NP		001
-090D	D2549010514272		. . PAN-FLOOR POST SB 25-1289 used on 001A, 001D SEE 25-41-51-13T FOR DET	NP		001

- ITEM NOT ILLUSTRATED

FIG. ITEM	PART NUMBER	AIRLINE STOCK NUMBER	NOMENCLATURE 1234567		EFF CODE	UNITS PER ASSY
-090E	D2549010601272		. . PAN-FLOOR used on 001E SEE 25-41-51-13D FOR DET	NP		001
-090F	D2549020611672		. . PAN-FLOOR used on 001F, 001M SEE 25-41-51-13C FOR DET	NP		001
-090G	D2549020700072		. . PAN-FLOOR used on 001G SEE 25-41-51-13D FOR DET	NP		001
-090H	D2549020610672		. . PAN-FLOOR PRE VSB A2-254-25-131 used on 001H SEE 25-41-51-13C FOR DET	NP		001
-090J	D2549020600472		. . PAN-FLOOR used on 001L, 001Q SEE 25-41-51-130 FOR DET	NP		001
-090K	D2549030511072		. . PAN-FLOOR used on 001K, 001N SEE 25-41-51-13C FOR DET	NP		001
-090L	R22540113700072		. . PAN-FLOOR POST VSB A2-254-25-131 used on 001R SEE 25-41-51-13C FOR DET	NP		001
-090M	R22540119604672		. . PAN-FLOOR POST VSB A2-254-25-130 used on 001S SEE 25-41-51-13D FOR DET	NP		001
100A	D2549010512673		. . LIGHT-DOOR PRE VSB A2-254-25-130 used on 001A, 001B, 001C, 001D, 001E, 001F, 001H, 001J, 001K, 001N, 001P, 001R SEE 25-41-51-140 FOR DET	NP		001

- ITEM NOT ILLUSTRATED

FIG. ITEM	PART NUMBER	AIRLINE STOCK NUMBER	NOMENCLATURE 1234567		EFF CODE	UNITS PER ASSY
-100B	D2549020612273		. . LIGHT-DOOR used on 001G SEE 25-41-51-14A FOR DET	NP		001
-100C	D2549020600473		. . LIGHT-DOOR used on 001L, 001Q SEE 25-41-51-140 FOR DET	NP		001
-100D	D2549020602673		. . LIGHT-DOOR used on 001M SEE 25-41-51-140 FOR DET	NP		001
-100E	R22540119604673		. . LIGHT-DOOR POST VSB A2-254-25-130 used on 001S SEE 25-41-51-14C FOR DET	NP		001
110A	D2549030514674		. . WASHBASIN UNIT PRE VSB A2-254-25-130 used on 001A, 001B, 001C, 001J, 001P SEE 25-41-51-15G FOR DET	NP		001
-110B	D2549030506074		. . WASHBASIN UNIT used on 001D SEE 25-41-51-15C FOR DET	NP		001
-110C	D2549010603274		. . WASHBASIN UNIT used on 001E, 001K, 001N SEE 25-41-51-15F FOR DET	NP		001
-110D	D2549010603674		. . WASHBASIN UNIT used on 001F SEE 25-41-51-15C FOR DET	NP		001
-110E	D2549020704674		. . WASHBASIN UNIT used on 001G, 001H, 001R SEE 25-41-51-15G FOR DET	NP		001

- ITEM NOT ILLUSTRATED

FIG. ITEM	PART NUMBER	AIRLINE STOCK NUMBER	NOMENCLATURE 1234567		EFF CODE	UNITS PER ASSY
-110F	D2549020600474		. . WASHBASIN UNIT used on 001L, 001Q SEE 25-41-51-150 FOR DET	NP		001
-110G	D2549020611674		. . WASHBASIN UNIT used on 001M SEE 25-41-51-15C FOR DET	NP		001
-110H	R22540119604674		. . WASHBASIN UNIT POST VSB A2-254-25-130 used on 001S SEE 25-41-51-15G FOR DET	NP		001
120A	D2549020607675		. . DOOR ASSY-WASHBASIN UNIT used on 001A, 001J SEE 25-41-51-16C FOR DET	NP		001
-120B	D2549030505475		. . DOOR ASSY-WASHBASIN UNIT PRE VSB A2-254-25-130 used on 001B, 001P SEE 25-41-51-16B FOR DET	NP		001
-120C	D2549020607075		. . DOOR ASSY-WASHBASIN UNIT used on 001C, 001D, 001H, 001K, 001M, 001N, 001R SEE 25-41-51-16B FOR DET	NP		001
-120D	D2549010510475		. . DOOR ASSY-WASHBASIN UNIT used on 001E SEE 25-41-51-16B FOR DET	NP		001
-120E	D2549010603675		. . DOOR ASSY-WASHBASIN UNIT used on 001F SEE 25-41-51-16C FOR DET	NP		001

- ITEM NOT ILLUSTRATED

FIG. ITEM	PART NUMBER	AIRLINE STOCK NUMBER	NOMENCLATURE 1234567		EFF CODE	UNITS PER ASSY
-120F	D2549020610275		. . DOOR ASSY-WASHBASIN UNIT used on 001G SEE 25-41-51-16B FOR DET	NP		001
-120G	D2549020600475		. . DOOR ASSY-WASHBASIN UNIT used on 001L, 001Q SEE 25-41-51-160 FOR DET	NP		001
-120H	R22540119604675		. . DOOR ASSY-WASHBASIN UNIT POST VSB A2-254-25-130 used on 001S SEE 25-41-51-16B FOR DET	NP		001
130A	D2549020607676		. . PANEL ASSY-WASHBASIN UNIT used on 001A, 001J SEE 25-41-51-17C FOR DET	NP		001
-130B	D2549030504876		. . PANEL ASSY-WASHBASIN UNIT PRE VSB A2-254-25-130 used on 001B, 001C, 001D, 001H, 001P, 001R SEE 25-41-51-17C FOR DET	NP		001
-130C	D2549010604876		. . PANEL ASSY-WASHBASIN UNIT used on 001E SEE 25-41-51-17D FOR DET	NP		001
-130D	D2549010603676		. . PANEL ASSY-WASHBASIN UNIT used on 001F SEE 25-41-51-17D FOR DET	NP		001

- ITEM NOT ILLUSTRATED

FIG. ITEM	PART NUMBER	AIRLINE STOCK NUMBER	NOMENCLATURE 1234567		EFF CODE	UNITS PER ASSY
-130E	D2549020610276		. . PANEL ASSY-WASHBASIN UNIT used on 001G SEE 25-41-51-17C FOR DET	NP		001
-130F	D2549030511076		. . PANEL ASSY-WASHBASIN UNIT used on 001K, 001N SEE 25-41-51-17D FOR DET	NP		001
-130G	D2549020600476		. . PANEL ASSY-WASHBASIN UNIT used on 001L, 001Q SEE 25-41-51-17A FOR DET	NP		001
-130H	D2549020611676		. . PANEL ASSY-WASHBASIN UNIT used on 001M SEE 25-41-51-17C FOR DET	NP		001
-130J	R22540119604676		. . PANEL ASSY-WASHBASIN UNIT POST VSB A2-254-25-130 used on 001S SEE 25-41-51-17C FOR DET	NP		001
140A	D2549030504877		. . BIN-WASTE,CHUTE-WASTE AND EXTINGUISHER-FIRE used on 001A, 001B, 001C, 001D, 001E, 001F, 001H, 001J, 001K, 001M, 001N, 001P, 001R, 001S SEE 25-41-51-180 FOR DET	NP		001
-140B	D2549010509477		. . BIN-WASTE,CHUTE-WASTE AND EXTINGUISHER-FIRE used on 001G SEE 25-41-51-180 FOR DET	NP		001

- ITEM NOT ILLUSTRATED

FIG. ITEM	PART NUMBER	AIRLINE STOCK NUMBER	NOMENCLATURE 1234567		EFF CODE	UNITS PER ASSY
-140C	D2549020600477		. . BIN-WASTE,CHUTE-WASTE AND EXTINGUISHER-FIRE used on 001L, 001Q SEE 25-41-51-180 FOR DET	NP		001
150A	D2549030504878		. . CABINET-SERVICE PRE VSB A2-254-25-042 PRE VSB A2-254-25-032 used on 001A, 001B, 001C, 001D, 001F, 001J, 001K, 001M, 001N SEE 25-41-51-19E FOR DET	NP		001
-150B	D2549030504078		. . CABINET-SERVICE used on 001E SEE 25-41-51-19E FOR DET	NP		001
-150C	D2549020610278		. . CABINET-SERVICE used on 001G SEE 25-41-51-19F FOR DET	NP		001
-150D	D2549030505278		. . CABINET-SERVICE used on 001H, 001R SEE 25-41-51-19E FOR DET	NP		001
-150E	D2549020600478		. . CABINET-SERVICE PRE VSB A2-254-25-036 used on 001L SEE 25-41-51-19A FOR DET	NP		001
-150F	R22540114200078		. . CABINET-SERVICE PRE VSB A2-254-25-130 POST VSB A2-254-25-042 used on 001P SEE 25-41-51-19E FOR DET	NP		001
-150G	D2549030504878		. . CABINET-SERVICE POST VSB A2-254-25-032 used on 001D SEE 25-41-51-19E FOR DET	NP		001

- ITEM NOT ILLUSTRATED

FIG. ITEM	PART NUMBER	AIRLINE STOCK NUMBER	NOMENCLATURE 1234567		EFF CODE	UNITS PER ASSY
-150H	R22540112800078		. . CABINET-SERVICE POST VSB A2-254-25-036 used on 001Q SEE 25-41-51-19A FOR DET	NP		001
-150J	R22540119604678		. . CABINET-SERVICE POST VSB A2-254-25-130 used on 001S SEE 25-41-51-19E FOR DET	NP		001
160A	D2549010510679		. . TABLE-NURSING used on 001A, 001C, 001D, 001E, 001F, 001J, 001K, 001M, 001N SEE 25-41-51-20A FOR DET	NP		001
-160B	D2549010512679		. . TABLE-NURSING PRE VSB A2-254-25-130 used on 001B, 001H, 001P, 001R SEE 25-41-51-20A FOR DET	NP		001
-160C	D2549020612279		. . TABLE-NURSING used on 001G SEE 25-41-51-20A FOR DET	NP		001
-160D	D2549020600479		. . TABLE-NURSING used on 001L, 001Q SEE 25-41-51-20A FOR DET	NP		001
-160E	R22540119604679		. . TABLE-NURSING POST VSB A2-254-25-130 used on 001S SEE 25-41-51-20A FOR DET	NP		001
170A	D2549010514280		. . VENTILATION SYSTEM PRE VSB A2-254-25-130 used on 001A, 001B, 001C, 001D, 001E, 001F, 001H, 001J, 001K, 001N, 001P, 001R SEE 25-41-51-21A FOR DET	NP		001

- ITEM NOT ILLUSTRATED

FIG. ITEM	PART NUMBER	AIRLINE STOCK NUMBER	NOMENCLATURE 1234567		EFF CODE	UNITS PER ASSY
-170B	D2549020707480		. . VENTILATION SYSTEM used on 001G SEE 25-41-51-21A FOR DET	NP		001
-170C	D2549020600480		. . VENTILATION SYSTEM used on 001L, 001Q SEE 25-41-51-210 FOR DET	NP		001
-170D	D2549030504880		. . VENTILATION SYSTEM used on 001M SEE 25-41-51-210 FOR DET	NP		001
-170E	R22540119604680		. . VENTILATION SYSTEM POST VSB A2-254-25-130 used on 001S SEE 25-41-51-21A FOR DET	NP		001
180A	D2549030504881		. . WATER SYSTEM-POTABLE used on 001A, 001B, 001C, 001D, 001F, 001G, 001H, 001J, 001M, 001P, 001R SEE 25-41-51-22D FOR DET	NP		001
-180B	D2549010510481		. . WATER SYSTEM-POTABLE used on 001E SEE 25-41-51-22F FOR DET	NP		001
-180C	D2549010513681		. . WATER SYSTEM-POTABLE used on 001K, 001N SEE 25-41-51-22H FOR DET			001
-180D	D2549010501881		. . WATER SYSTEM-POTABLE used on 001L, 001Q SEE 25-41-51-220 FOR DET			001
-180E	R22540119604681		. . WATER SYSTEM-POTABLE used on 001S SEE 25-41-51-22D FOR DET	NP		001

- ITEM NOT ILLUSTRATED

FIG. ITEM	PART NUMBER	AIRLINE STOCK NUMBER	NOMENCLATURE 1234567	EFF CODE	UNITS PER ASSY
190A	D2549010511082		. . WATER SYSTEM-WASTE used on 001A, 001B, 001C, 001E, 001F, 001J, 001M, 001P, 001Q, 001S SEE 25-41-51-23B FOR DET		001
-190B	D2549030504882		. . WATER SYSTEM-WASTE used on 001D, 001G, 001H, 001R SEE 25-41-51-23B FOR DET		001
-190C	D2549030504082		. . WATER SYSTEM-WASTE used on 001K, 001N SEE 25-41-51-23B FOR DET		001
-190D	D2549020600482		. . WATER SYSTEM-WASTE used on 001L, 001Q SEE 25-41-51-23C FOR DET		001
200A	D2549030508083		. . ELECTRICAL SYSTEM used on 001H, 001R SEE 25-41-51-26C FOR DET		001
-200B	D2549010603683		. . ELECTRICAL SYSTEM used on 001E SEE 25-41-51-26E FOR DET		001
-200C	D2549030604683		. . ELECTRICAL SYSTEM used on 001G SEE 25-41-51-26E FOR DET		001
-200D	D2549030514883		. . ELECTRICAL SYSTEM used on 001K SEE 25-41-51-26E FOR DET		001
-200E	D2549020600483		. . ELECTRICAL SYSTEM used on 001L, 001Q SEE 25-41-51-260 FOR DET		001
-200F	D2549030504883		. . ELECTRICAL SYSTEM used on 001M SEE 25-41-51-26C FOR DET		001

- ITEM NOT ILLUSTRATED

FIG. ITEM	PART NUMBER	AIRLINE STOCK NUMBER	NOMENCLATURE 1234567	EFF CODE	UNITS PER ASSY
-200G	D2549010603883		. . ELECTRICAL SYSTEM PRE VSB A2-254-25-130 used on 001A, 001B, 001C, 001D, 001F, 001J, 001P SEE 25-41-51-26E FOR DET		001
-200H	D2549030514983		. . ELECTRICAL SYSTEM used on 001N SEE 25-41-51-26E FOR DET		001
-200J	R22540119604683		. . ELECTRICAL SYSTEM POST VSB A2-254-25-130 used on 001S SEE 25-41-51-26E FOR DET		001

- ITEM NOT ILLUSTRATED

THIS PAGE IS INTENTIONALLY LEFT BLANK

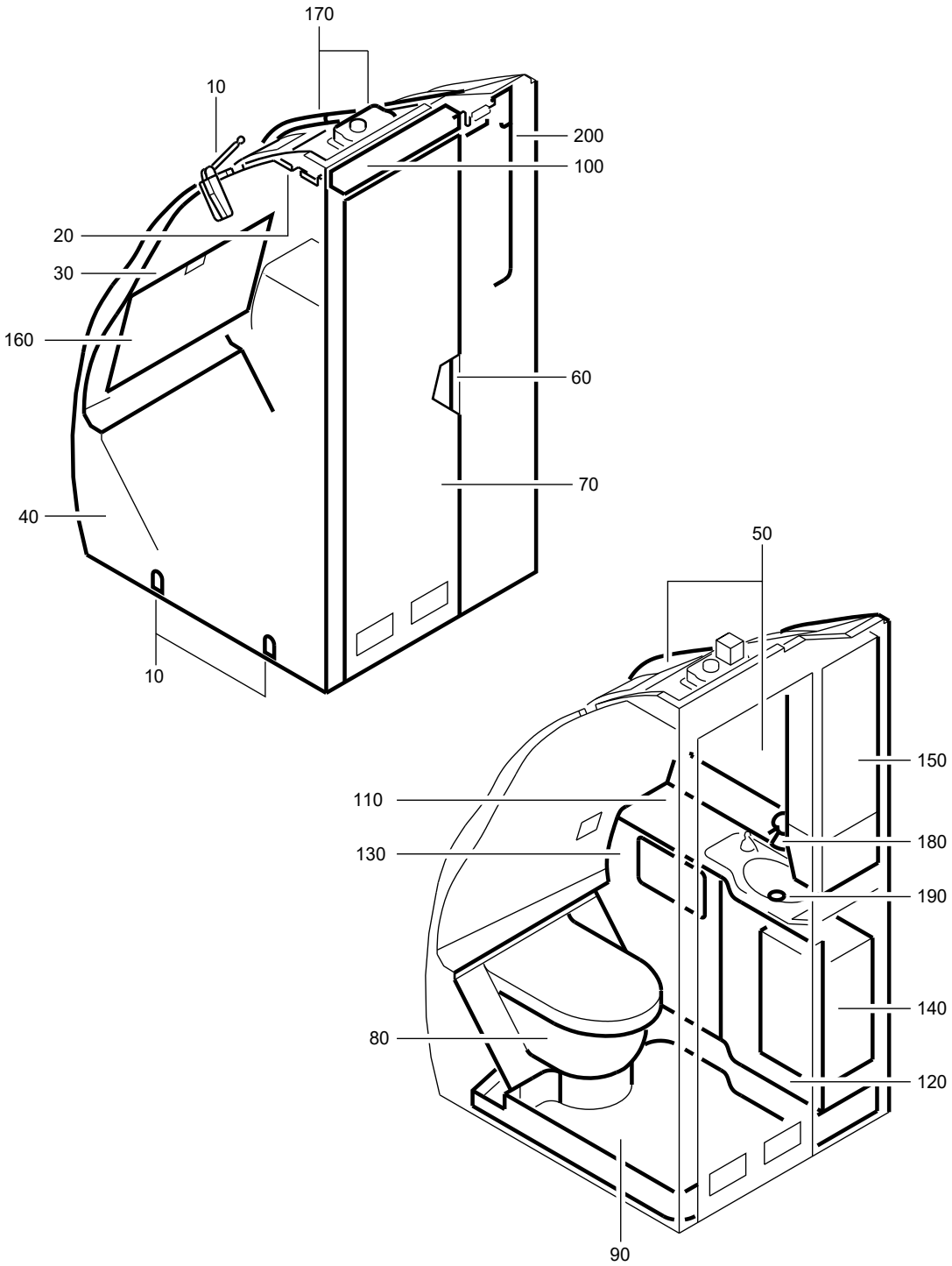

F_PL_254151_41_A_01_00

LAVATORY A ASSY
Figure 41A/EN254151SHEET41A01

FIG. ITEM	PART NUMBER	AIRLINE STOCK NUMBER	NOMENCLATURE 1234567	EFF CODE	UNITS PER ASSY
41A					
-001A	D2549010603800		. LAVATORY A ASSY PRE VSB A2-254-25-131 SEE SIL 25-117 FOR DET		RF
-001B	D2549020710000		. LAVATORY A ASSY SEE SIL 25-117 FOR DET		RF
-001C	D2549020710800		. LAVATORY A ASSY SEE SIL 25-117 FOR DET		RF
-001D	D2549010604800		. LAVATORY A ASSY PRE VSB A2-254-25-047 SEE SIL 25-117 FOR DET		RF
-001E	D2549020712400		. LAVATORY A ASSY SEE SIL 25-117 FOR DET		RF
-001F	D2549010604200		. LAVATORY A ASSY PRE VSB A2-254-25-131 SEE SIL 25-117 FOR DET		RF
-001G	D2549020712800		. LAVATORY A ASSY SEE SIL 25-117 FOR DET		RF
-001H	D2549020713600		. LAVATORY A ASSY SEE SIL 25-117 FOR DET		RF
-001J	D2549010605600		. LAVATORY A ASSY SEE SIL 25-117 FOR DET		RF
-001K	D2549020713800		. LAVATORY A ASSY SEE SIL 25-117 FOR DET		RF
-001L	D2549020714400		. LAVATORY A ASSY SEE SIL 25-117 FOR DET		RF
-001M	D2549020701600		. LAVATORY A ASSY SEE SIL 25-117 FOR DET		RF

- ITEM NOT ILLUSTRATED

FIG. ITEM	PART NUMBER	AIRLINE STOCK NUMBER	NOMENCLATURE 1234567	EFF CODE	UNITS PER ASSY
-001N	D2549020713800		. LAVATORY A ASSY SEE SIL 25-117 FOR DET		RF
-001P	R225401603-000		. LAVATORY A ASSY POST VSB A2-254-25-047		RF
-001Q	R225401600-000		. LAVATORY A ASSY POST VSB A2-254-25-131 SEE SIL 25-117 FOR DET		RF
-001R	R225401600-002		. LAVATORY A ASSY POST VSB A2-254-25-131 SEE SIL 25-117 FOR DET		RF
010A	D2549030514661		. . ATTACHMENT-LAVATORY NP used on 001A, 001F, 001Q, 001R SEE 25-41-51-02A FOR DET		001
-010B	D2549020710061		. . ATTACHMENT-LAVATORY NP used on 001B SEE 25-41-51-02A FOR DET		001
-010C	D2549030514861		. . ATTACHMENT-LAVATORY NP used on 001C, 001D, 001H, 001J, 001K, 001M, 001N, 001P SEE 25-41-51-02A FOR DET		001
-010D	D2549020709461		. . ATTACHMENT-LAVATORY NP used on 001L SEE 25-41-51-02B FOR DET		001
-010E	D2549020705861		. . ATTACHMENT-LAVATORY NP used on 001E, 001G SEE 25-41-51-02D FOR DET		001
020A	D2549020602663		. . PANEL-CEILING NP used on 001A, 001C, 001D, 001E, 001F, 001G, 001H, 001J, 001K, 001M, 001N, 001P, 001Q, 001R SEE 25-41-51-040 FOR DET		001

- ITEM NOT ILLUSTRATED

FIG. ITEM	PART NUMBER	AIRLINE STOCK NUMBER	NOMENCLATURE 1234567		EFF CODE	UNITS PER ASSY
-020B	D2549020710063		. . PANEL-CEILING used on 001B SEE 25-41-51-040 FOR DET	NP		001
-020C	D2549010513863		. . PANEL-CEILING used on 001L SEE 25-41-51-040 FOR DET	NP		001
030A	D2549010512664		. . WALL-REAR used on 001A, 001C, 001E, 001F, 001G, 001H, 001J, 001K, 001M, 001N, 001Q, 001R SEE 25-41-51-05B FOR DET	NP		001
-030B	D2549020710064		. . WALL-REAR used on 001B SEE 25-41-51-05C FOR DET	NP		001
-030C	D2549020614864		. . WALL-REAR used on 001D, 001P SEE 25-41-51-05D FOR DET	NP		001
-030D	D2549010600264		. . WALL-REAR used on 001L SEE 25-41-51-05D FOR DET	NP		001
040A	D2549020703265		. . WALL-SIDE used on 001A, 001F, 001Q, 001R SEE 25-41-51-06M FOR DET	NP		001
-040B	D2549020710065		. . WALL-SIDE used on 001B SEE 25-41-51-06Q FOR DET	NP		001
-040C	D2549020710865		. . WALL-SIDE used on 001C SEE 25-41-51-06Q FOR DET	NP		001
-040D	D2549010601265		. . WALL-SIDE used on 001D, 001P SEE 25-41-51-06M FOR DET	NP		001

- ITEM NOT ILLUSTRATED

FIG. ITEM	PART NUMBER	AIRLINE STOCK NUMBER	NOMENCLATURE 1234567	EFF CODE	UNITS PER ASSY
-040E	D2549010603665		. . WALL-SIDE NP used on 001E, 001G SEE 25-41-51-06Q FOR DET		001
-040F	D2549020713665		. . WALL-SIDE NP used on 001H SEE 25-41-51-06T FOR DET		001
-040G	D2549030602465		. . WALL-SIDE NP used on 001J SEE 25-41-51-06R FOR DET		001
-040H	D2549030511065		. . WALL-SIDE NP used on 001K, 001N SEE 25-41-51-06N FOR DET		001
-040J	D2549030511865		. . WALL-SIDE NP used on 001L SEE 25-41-51-06M FOR DET		001
-040K	D2549020701665		. . WALL-SIDE NP used on 001M SEE 25-41-51-06T FOR DET		001
050A	D2549030505266		. . HOUSING NP used on 001A, 001F, 001Q, 001R SEE 25-41-51-07B FOR DET		001
-050B	D2549020710066		. . HOUSING NP used on 001B SEE 25-41-51-07G FOR DET		001
-050C	D2549020607666		. . HOUSING NP used on 001C, 001H SEE 25-41-51-07D FOR DET		001
-050D	D2549010601266		. . HOUSING NP used on 001D, 001P SEE 25-41-51-07F FOR DET		001

- ITEM NOT ILLUSTRATED

FIG. ITEM	PART NUMBER	AIRLINE STOCK NUMBER	NOMENCLATURE 1234567		EFF CODE	UNITS PER ASSY
-050E	D2549010603666		. . HOUSING used on 001E, 001G SEE 25-41-51-07G FOR DET	NP		001
-050F	D2549030511666		. . HOUSING used on 001J SEE 25-41-51-07G FOR DET	NP		001
-050G	D2549030511066		. . HOUSING used on 001K, 001N SEE 25-41-51-07F FOR DET	NP		001
-050H	D2549030607266		. . HOUSING used on 001L SEE 25-41-51-07J FOR DET	NP		001
-050J	D2549020701666		. . HOUSING used on 001M SEE 25-41-51-07J FOR DET	NP		001
060A	D2549010500069		. . DOOR INSTL used on 001A, 001B, 001C, 001D, 001E, 001F, 001G, 001H, 001J, 001K, 001L, 001M, 001N, 001P, 001Q, 001R SEE 25-41-51-100 FOR DET	NP		001
070A	A225400276-586		. . DOOR ASSY-SINGLE used on 001A, 001F, 001Q, 001R SEE 25-41-51-11E FOR DET			001
-070B	A225400276-954		. . DOOR ASSY-SINGLE used on 001B SEE 25-41-51-11G FOR DET			001
-070C	A225400278-502		. . DOOR ASSY-SINGLE used on 001C SEE 25-41-51-11H FOR DET			001

- ITEM NOT ILLUSTRATED

FIG. ITEM	PART NUMBER	AIRLINE STOCK NUMBER	NOMENCLATURE 1234567		EFF CODE	UNITS PER ASSY
-070D	A225400276-924		. . DOOR ASSY-SINGLE used on 001D, 001P SEE 25-41-51-11E FOR DET			001
-070E	A225400276-596		. . DOOR ASSY-SINGLE used on 001E, 001G SEE 25-41-51-11G FOR DET			001
-070F	A225400276-958		. . DOOR ASSY-SINGLE used on 001H SEE 25-41-51-11J FOR DET			001
-070G	A225400276-928		. . DOOR ASSY-SINGLE used on 001J SEE 25-41-51-11F FOR DET			001
-070H	A225400276-580		. . DOOR ASSY-SINGLE used on 001K SEE 25-41-51-11F FOR DET			001
-070J	A225400276-578		. . DOOR ASSY-SINGLE used on 001L SEE 25-41-51-11F FOR DET			001
-070K	A225400276-948		. . DOOR ASSY-SINGLE used on 001M, 001N SEE 25-41-51-11G FOR DET			001
080A	D2549020604271		. . TOILET UNIT AND TOILET SHROUD used on 001A, 001F, 001K, 001L, 001M, 001N, 001Q, 001R SEE 25-41-51-12C FOR DET	NP		001
-080B	D2549020710071		. . TOILET UNIT AND TOILET SHROUD used on 001B SEE 25-41-51-12D FOR DET	NP		001

- ITEM NOT ILLUSTRATED

FIG. ITEM	PART NUMBER	AIRLINE STOCK NUMBER	NOMENCLATURE 1234567		EFF CODE	UNITS PER ASSY
-080C	D2549020607671		. . TOILET UNIT AND TOILET SHROUD used on 001C, 001H SEE 25-41-51-12C FOR DET	NP		001
-080D	D2549010510471		. . TOILET UNIT AND TOILET SHROUD used on 001D, 001P SEE 25-41-51-12C FOR DET	NP		001
-080E	D2549020712471		. . TOILET UNIT AND TOILET SHROUD used on 001E, 001G SEE 25-41-51-12D FOR DET	NP		001
-080F	D2549030511671		. . TOILET UNIT AND TOILET SHROUD used on 001J SEE 25-41-51-12D FOR DET	NP		001
090A	D2549020610672		. . PAN-FLOOR PRE VSB A2-254-25-131 used on 001A, 001F SEE 25-41-51-13C FOR DET	NP		001
-090B	D2549020710072		. . PAN-FLOOR used on 001B SEE 25-41-51-13E FOR DET	NP		001
-090C	D2549020710872		. . PAN-FLOOR used on 001C SEE 25-41-51-13E FOR DET	NP		001
-090D	D2549010510472		. . PAN-FLOOR used on 001D, 001P SEE 25-41-51-13B FOR DET	NP		001
-090E	D2549020611672		. . PAN-FLOOR used on 001E, 001G SEE 25-41-51-13C FOR DET	NP		001

- ITEM NOT ILLUSTRATED

FIG. ITEM	PART NUMBER	AIRLINE STOCK NUMBER	NOMENCLATURE 1234567		EFF CODE	UNITS PER ASSY
-090F	D2549020713672		. . PAN-FLOOR used on 001H SEE 25-41-51-13E FOR DET	NP		001
-090G	D2549010605672		. . PAN-FLOOR used on 001J SEE 25-41-51-13E FOR DET	NP		001
-090H	D2549030511072		. . PAN-FLOOR used on 001K, 001N SEE 25-41-51-13C FOR DET	NP		001
-090J	D2549030603072		. . PAN-FLOOR used on 001L SEE 25-41-51-13E FOR DET	NP		001
-090K	D2549020702272		. . PAN-FLOOR used on 001M SEE 25-41-51-13D FOR DET	NP		001
-090L	R22540113700072		. . PAN-FLOOR POST VSB A2-254-25-131 used on 001Q, 001R SEE 25-41-51-13C FOR DET	NP		001
100A	D2549010512673		. . LIGHT-DOOR used on 001A, 001C, 001D, 001E, 001F, 001G, 001H, 001J, 001K, 001M, 001N, 001P, 001Q, 001R SEE 25-41-51-140 FOR DET	NP		001
-100B	D2549020710073		. . LIGHT-DOOR used on 001B SEE 25-41-51-14A FOR DET	NP		001
-100C	D2549010600273		. . LIGHT-DOOR used on 001L SEE 25-41-51-14A FOR DET	NP		001

- ITEM NOT ILLUSTRATED

FIG. ITEM	PART NUMBER	AIRLINE STOCK NUMBER	NOMENCLATURE 1234567		EFF CODE	UNITS PER ASSY
110A	D2549020704674		. . WASHBASIN UNIT used on 001A, 001F, 001Q, 001R SEE 25-41-51-15G FOR DET	NP		001
-110B	D2549030506074		. . WASHBASIN UNIT used on 001B, 001C SEE 25-41-51-15C FOR DET	NP		001
-110C	D2549010604874		. . WASHBASIN UNIT used on 001D, 001P SEE 25-41-51-15H FOR DET	NP		001
-110D	D2549010603674		. . WASHBASIN UNIT used on 001E, 001G, 001J SEE 25-41-51-15C FOR DET	NP		001
-110E	D2549020704674		. . WASHBASIN UNIT used on 001H SEE 25-41-51-15G FOR DET	NP		001
-110F	D2549010603274		. . WASHBASIN UNIT used on 001K, 001N SEE 25-41-51-15F FOR DET	NP		001
-110G	D2549030514674		. . WASHBASIN UNIT used on 001L, 001M SEE 25-41-51-15G FOR DET	NP		001
120A	D2549020607075		. . DOOR ASSY-WASHBASIN UNIT used on 001A, 001F, 001J, 001K, 001L, 001M, 001N, 001Q, 001R SEE 25-41-51-16B FOR DET	NP		001
-120B	D2549020710075		. . DOOR ASSY-WASHBASIN UNIT used on 001B SEE 25-41-51-16C FOR DET	NP		001

- ITEM NOT ILLUSTRATED

FIG. ITEM	PART NUMBER	AIRLINE STOCK NUMBER	NOMENCLATURE 1234567	EFF CODE	UNITS PER ASSY
-120C	D2549020607675		. . DOOR ASSY-WASHBASIN UNIT NP used on 001C, 001H SEE 25-41-51-16C FOR DET		001
-120D	D2549010510475		. . DOOR ASSY-WASHBASIN UNIT NP used on 001D, 001P SEE 25-41-51-16B FOR DET		001
-120E	D2549010603675		. . DOOR ASSY-WASHBASIN UNIT NP used on 001E, 001G SEE 25-41-51-16C FOR DET		001
130A	D2549030504876		. . PANEL ASSY-WASHBASIN UNIT NP used on 001A, 001F, 001J, 001L, 001M, 001Q, 001R SEE 25-41-51-17C FOR DET		001
-130B	D2549020710076		. . PANEL ASSY-WASHBASIN UNIT NP used on 001B SEE 25-41-51-17D FOR DET		001
-130C	D2549020607676		. . PANEL ASSY-WASHBASIN UNIT NP used on 001C, 001H SEE 25-41-51-17C FOR DET		001
-130D	D2549010604876		. . PANEL ASSY-WASHBASIN UNIT NP used on 001D, 001P SEE 25-41-51-17D FOR DET		001
-130E	D2549010603676		. . PANEL ASSY-WASHBASIN UNIT NP used on 001E, 001G SEE 25-41-51-17D FOR DET		001

- ITEM NOT ILLUSTRATED

FIG. ITEM	PART NUMBER	AIRLINE STOCK NUMBER	NOMENCLATURE 1234567		EFF CODE	UNITS PER ASSY
-130F	D2549030511076		. . PANEL ASSY-WASHBASIN UNIT used on 001K, 001N SEE 25-41-51-17D FOR DET	NP		001
140A	D2549030504877		. . BIN-WASTE,CHUTE-WASTE AND EXTINGUISHER-FIRE used on 001A, 001B, 001C, 001D, 001E, 001F, 001G, 001H, 001J, 001K, 001L, 001M, 001N, 001P, 001Q, 001R SEE 25-41-51-180 FOR DET	NP		001
150A	D2549030505278		. . CABINET-SERVICE used on 001A, 001F, 001Q, 001R SEE 25-41-51-19E FOR DET	NP		001
-150B	D2549020710078		. . CABINET-SERVICE used on 001B SEE 25-41-51-19F FOR DET	NP		001
-150C	D2549030504878		. . CABINET-SERVICE used on 001C, 001D, 001E, 001G, 001H, 001J, 001K, 001M, 001N, 001P SEE 25-41-51-19E FOR DET	NP		001
-150D	D2549010513878		. . CABINET-SERVICE used on 001L SEE 25-41-51-19F FOR DET	NP		001
160A	D2549010512679		. . TABLE-NURSING used on 001A, 001F, 001Q, 001R SEE 25-41-51-20A FOR DET	NP		001
-160B	D2549020710079		. . TABLE-NURSING used on 001B SEE 25-41-51-20B FOR DET	NP		001

- ITEM NOT ILLUSTRATED

FIG. ITEM	PART NUMBER	AIRLINE STOCK NUMBER	NOMENCLATURE 1234567		EFF CODE	UNITS PER ASSY
-160C	D2549010510679		. . TABLE-NURSING used on 001C, 001D, 001E, 001G, 001H, 001J, 001K, 001M, 001N, 001P SEE 25-41-51-20A FOR DET	NP		001
-160D	D2549010600279		. . TABLE-NURSING used on 001L SEE 25-41-51-20A FOR DET	NP		001
170A	D2549010514280		. . VENTILATION SYSTEM used on 001A, 001C, 001D, 001E, 001F, 001G, 001H, 001J, 001K, 001M, 001N, 001P, 001Q, 001R SEE 25-41-51-21A FOR DET	NP		001
-170B	D2549020710080		. . VENTILATION SYSTEM used on 001B SEE 25-41-51-21A FOR DET	NP		001
-170C	D2549030507680		. . VENTILATION SYSTEM used on 001L SEE 25-41-51-21A FOR DET	NP		001
180A	D2549030504881		. . WATER SYSTEM-POTABLE used on 001A, 001B, 001C, 001E, 001F, 001H, 001J, 001L, 001M, 001Q, 001R SEE 25-41-51-22D FOR DET	NP		001
-180B	D2549020713881		. . WATER SYSTEM-POTABLE used on 001K, 001N SEE 25-41-51-22H FOR DET	NP		001
-180C	D2549010604881		. . WATER SYSTEM-POTABLE used on 001D, 001P SEE 25-41-51-22F FOR DET	NP		001

- ITEM NOT ILLUSTRATED

FIG. ITEM	PART NUMBER	AIRLINE STOCK NUMBER	NOMENCLATURE 1234567		EFF CODE	UNITS PER ASSY
-180D	D2549010606081		. . WATER SYSTEM-POTABLE used on 001G SEE 25-41-51-22D FOR DET	NP		001
190A	D2549030504882		. . WATER SYSTEM-WASTE used on 001A, 001B, 001C, 001D, 001F, 001H, 001P, 001Q, 001R SEE 25-41-51-23B FOR DET	NP		001
-190B	D2549010511082		. . WATER SYSTEM-WASTE used on 001E, 001G, 001J, 001L, 001M SEE 25-41-51-23B FOR DET	NP		001
-190C	D2549020507282		. . WATER SYSTEM-WASTE used on 001K, 001N SEE 25-41-51-23B FOR DET	NP		001
200A	D2549010603883		. . ELECTRICAL SYSTEM used on 001A, 001C, 001E, 001Q SEE 25-41-51-26E FOR DET	NP		001
-200B	D2549010603683		. . ELECTRICAL SYSTEM used on 001D, 001P SEE 25-41-51-26E FOR DET	NP		001
-200C	D2549030605283		. . ELECTRICAL SYSTEM used on 001F, 001G, 001H, 001L, 001M, 001R SEE 25-41-51-26F FOR DET	NP		001
-200D	D2549030602483		. . ELECTRICAL SYSTEM used on 001J SEE 25-41-51-26G FOR DET	NP		001
-200E	D2549020713883		. . ELECTRICAL SYSTEM used on 001K SEE 25-41-51-26J FOR DET	NP		001

- ITEM NOT ILLUSTRATED

FIG. ITEM	PART NUMBER	AIRLINE STOCK NUMBER	NOMENCLATURE 1234567	EFF CODE	UNITS PER ASSY
-200F	D2549030604883		. . ELECTRICAL SYSTEM NP used on 001B SEE 25-41-51-26E FOR DET		001
-200G	D2549030606483		. . ELECTRICAL SYSTEM NP used on 001N SEE 25-41-51-26J FOR DET		001

- ITEM NOT ILLUSTRATED

THIS PAGE IS INTENTIONALLY LEFT BLANK

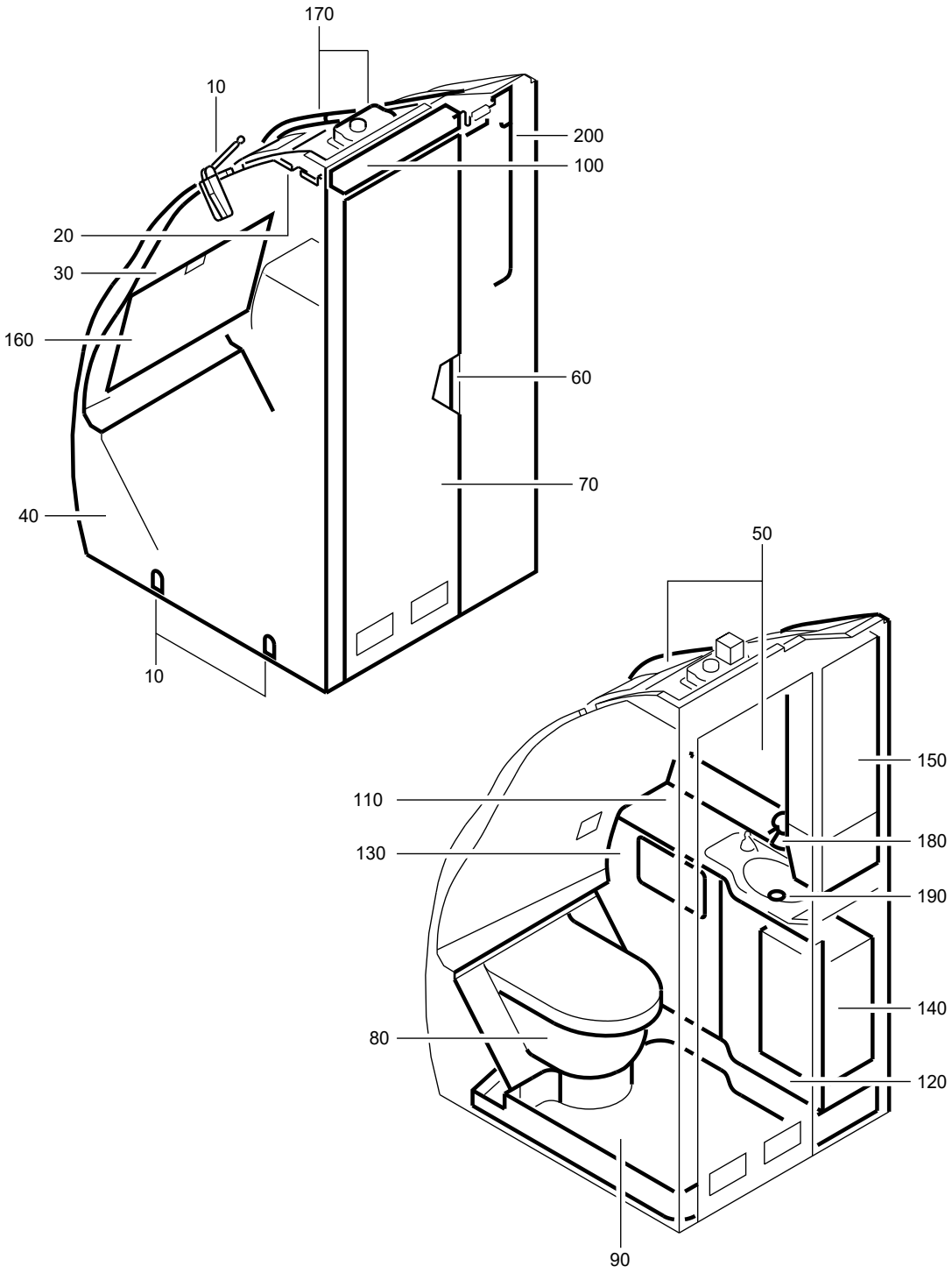

F_PL_254151_41_B_01_00

LAVATORY A ASSY
Figure 41B/EN254151SHEET41B01

FIG. ITEM	PART NUMBER	AIRLINE STOCK NUMBER	NOMENCLATURE 1234567	EFF CODE	UNITS PER ASSY
41B					
-001A	D2549010513800		. LAVATORY A ASSY PRE VSB A2-254-25-037 SEE SIL 25-117 FOR DET		RF
-001B	D2549010506800		. LAVATORY A ASSY SEE SIL 25-117 FOR DET		RF
-001C	D2549030506000		. LAVATORY A ASSY PRE VSB A2-254-25-100 SEE SIL 25-117 FOR DET		RF
-001D	D2549020609200		. LAVATORY A ASSY SEE SIL 25-117 FOR DET		RF
-001E	D2549010512000		. LAVATORY A ASSY SEE SIL 25-117 FOR DET		RF
-001F	D2549010513600		. LAVATORY A ASSY SEE SIL 25-117 FOR DET		RF
-001G	D2549010509800		. LAVATORY A ASSY SEE SIL 25-117 FOR DET		RF
-001H	D2549030604600		. LAVATORY A ASSY SEE SIL 25-117 FOR DET		RF
-001J	D2549030603800		. LAVATORY A ASSY SEE SIL 25-117 FOR DET		RF
-001K	D2549030604800		. LAVATORY A ASSY PRE VSB A2-254-25-046 SEE SIL 25-117 FOR DET		RF
-001L	D2549030604400		. LAVATORY A ASSY SEE SIL 25-117 FOR DET		RF
-001M	D2549030605200		. LAVATORY A ASSY SEE SIL 25-117 FOR DET		RF

- ITEM NOT ILLUSTRATED

FIG. ITEM	PART NUMBER	AIRLINE STOCK NUMBER	NOMENCLATURE 1234567		EFF CODE	UNITS PER ASSY
-001N	D2549010513600		. LAVATORY A ASSY SEE SIL 25-117 FOR DET			RF
-001P	R225401175-000		. LAVATORY A ASSY POST VSB A2-254-25-037 SEE SIL 25-117 FOR DET			RF
-001Q	R225401134-020		. LAVATORY A ASSY POST VSB A2-254-25-046			RF
-001R	R225401160-002		. LAVATORY A ASSY POST VSB A2-254-25-100			RF
010A	D2549010513861		. . ATTACHMENT-LAVATORY used on 001A, 001P SEE 25-41-51-020 FOR DET	NP		001
-010B	D2549020602661		. . ATTACHMENT-LAVATORY used on 001B, 001E, 001F, 001G, 001N SEE 25-41-51-020 FOR DET	NP		001
-010C	D2549030506061		. . ATTACHMENT-LAVATORY used on 001C, 001D, 001R SEE 25-41-51-020 FOR DET	NP		001
-010D	D2549020705861		. . ATTACHMENT-LAVATORY used on 001H, 001M SEE 25-41-51-02D FOR DET	NP		001
-010E	D2549030513861		. . ATTACHMENT-LAVATORY used on 001J SEE 25-41-51-02A FOR DET	NP		001
-010F	D2549030513061		. . ATTACHMENT-LAVATORY used on 001K, 001Q SEE 25-41-51-02A FOR DET	NP		001
-010G	D2549030510061		. . ATTACHMENT-LAVATORY used on 001L SEE 25-41-51-02A FOR DET	NP		001

- ITEM NOT ILLUSTRATED

FIG. ITEM	PART NUMBER	AIRLINE STOCK NUMBER	NOMENCLATURE 1234567	EFF CODE	UNITS PER ASSY
020A	D2549010513863		. . PANEL-CEILING NP used on 001A, 001P SEE 25-41-51-040 FOR DET		001
-020B	D2549020602663		. . PANEL-CEILING NP used on 001B, 001E, 001F, 001G, 001H, 001M, 001N SEE 25-41-51-040 FOR DET		001
-020C	D2549030506063		. . PANEL-CEILING NP used on 001C, 001D, 001L, 001R SEE 25-41-51-040 FOR DET		001
-020D	D2549020602863		. . PANEL-CEILING NP used on 001J, 001K, 001Q SEE 25-41-51-040 FOR DET		001
030A	D2549010513864		. . WALL-REAR NP used on 001A, 001P SEE 25-41-51-05A FOR DET		001
-030B	D2549010513264		. . WALL-REAR NP used on 001B, 001E, 001F, 001G, 001N SEE 25-41-51-050 FOR DET		001
-030C	D2549030506064		. . WALL-REAR NP used on 001C, 001D, 001R SEE 25-41-51-050 FOR DET		001
-030D	D2549010512664		. . WALL-REAR NP used on 001H, 001M SEE 25-41-51-05B FOR DET		001
-030E	D2549030509464		. . WALL-REAR NP used on 001J SEE 25-41-51-05D FOR DET		001
-030F	D2549020613664		. . WALL-REAR NP used on 001K, 001Q SEE 25-41-51-05B FOR DET		001

- ITEM NOT ILLUSTRATED

FIG. ITEM	PART NUMBER	AIRLINE STOCK NUMBER	NOMENCLATURE 1234567	EFF CODE	UNITS PER ASSY
-030G	D2549030601464		. . WALL-REAR NP used on 001L SEE 25-41-51-05C FOR DET		001
040A	D2549010513865		. . WALL-SIDE NP PRE VSB A2-254-25-037 used on 001A SEE 25-41-51-06J FOR DET		001
-040B	D2549010506865		. . WALL-SIDE NP used on 001B SEE 25-41-51-06E FOR DET		001
-040C	D2549030506065		. . WALL-SIDE NP used on 001C, 001D, 001R SEE 25-41-51-06F FOR DET		001
-040D	D2549010512065		. . WALL-SIDE NP used on 001E SEE 25-41-51-06G FOR DET		001
-040E	D2549010513665		. . WALL-SIDE NP used on 001F, 001N SEE 25-41-51-06H FOR DET		001
-040F	D2549010509865		. . WALL-SIDE NP used on 001G SEE 25-41-51-06G FOR DET		001
-040G	D2549030511665		. . WALL-SIDE NP used on 001H SEE 25-41-51-06N FOR DET		001
-040H	D2549030513865		. . WALL-SIDE NP used on 001J SEE 25-41-51-06P FOR DET		001
-040J	D2549020613665		. . WALL-SIDE NP used on 001K, 001Q SEE 25-41-51-06K FOR DET		001

- ITEM NOT ILLUSTRATED

FIG. ITEM	PART NUMBER	AIRLINE STOCK NUMBER	NOMENCLATURE 1234567	EFF CODE	UNITS PER ASSY
-040K	D2549030601465		. . WALL-SIDE NP used on 001L SEE 25-41-51-06Q FOR DET		001
-040L	D2549020614465		. . WALL-SIDE NP used on 001M SEE 25-41-51-06L FOR DET		001
-040M	R22540117500065		. . WALL-SIDE NP POST VSB A2-254-25-037 used on 001P SEE 25-41-51-06J FOR DET		001
050A	D2549010513866		. . HOUSING NP used on 001A, 001P SEE 25-41-51-07E FOR DET		001
-050B	D2549010506866		. . HOUSING NP used on 001B SEE 25-41-51-07C FOR DET		001
-050C	D2549030506066		. . HOUSING NP used on 001C, 001D, 001L, 001R SEE 25-41-51-07C FOR DET		001
-050D	D2549010509866		. . HOUSING NP used on 001E SEE 25-41-51-07D FOR DET		001
-050E	D2549010513666		. . HOUSING NP used on 001F, 001N SEE 25-41-51-07E FOR DET		001
-050F	D2549010509866		. . HOUSING NP used on 001G SEE 25-41-51-07D FOR DET		001
-050G	D2549030511666		. . HOUSING NP used on 001H SEE 25-41-51-07G FOR DET		001

- ITEM NOT ILLUSTRATED

FIG. ITEM	PART NUMBER	AIRLINE STOCK NUMBER	NOMENCLATURE 1234567		EFF CODE	UNITS PER ASSY
-050H	D2549020506266		. . HOUSING used on 001J SEE 25-41-51-07D FOR DET	NP		001
-050J	D2549020605666		. . HOUSING used on 001K, 001Q SEE 25-41-51-07D FOR DET	NP		001
-050K	D2549030505866		. . HOUSING used on 001M SEE 25-41-51-07D FOR DET	NP		001
060A	D2549010500069		. . DOOR INSTL used on 001A, 001B, 001E, 001F, 001G, 001H, 001J, 001K, 001M, 001N, 001P, 001Q SEE 25-41-51-100 FOR DET	NP		001
-060B	D2549020401269		. . DOOR INSTL POST SB 25-1314 used on 001C, 001D, 001L, 001R SEE 25-41-51-10A FOR DET	NP		001
070A	A225400276-564		. . DOOR ASSY-SINGLE used on 001A, 001P SEE 25-41-51-11E FOR DET			001
-070B	A225400270-502		. . DOOR ASSY-SINGLE used on 001B SEE 25-41-51-110 FOR DET			001
-070C	A2254002768912		. . DOOR ASSY-SINGLE POST SB 25-1314 used on 001C, 001D, 001R SEE 25-41-51-11N FOR DET			001
-070D	A225400276-502		. . DOOR ASSY-SINGLE used on 001E, 001G SEE 25-41-51-11B FOR DET			001

- ITEM NOT ILLUSTRATED

FIG. ITEM	PART NUMBER	AIRLINE STOCK NUMBER	NOMENCLATURE 1234567	EFF CODE	UNITS PER ASSY
-070E	A225400276-552		. . DOOR ASSY-SINGLE used on 001F, 001N SEE 25-41-51-11C FOR DET		001
-070G	A225400276-928		. . DOOR ASSY-SINGLE used on 001H SEE 25-41-51-11F FOR DET		001
-070H	A225400276-590		. . DOOR ASSY-SINGLE used on 001J SEE 25-41-51-11E FOR DET		001
-070J	A225400276-570		. . DOOR ASSY-SINGLE used on 001K, 001Q SEE 25-41-51-11E FOR DET		001
-070K	A2254002768930		. . DOOR ASSY-SINGLE POST SB 25-1314 used on 001L SEE 25-41-51-11N FOR DET		001
-070L	A225400276-588		. . DOOR ASSY-SINGLE used on 001M SEE 25-41-51-11F FOR DET		001
080A	D2549020604271		. . TOILET UNIT AND TOILET SHROUD NP used on 001A, 001E, 001F, 001G, 001M, 001N, 001P SEE 25-41-51-12C FOR DET		001
-080B	D2549010507471		. . TOILET UNIT AND TOILET SHROUD NP used on 001B SEE 25-41-51-12A FOR DET		001
-080C	D2549030506071		. . TOILET UNIT AND TOILET SHROUD NP used on 001C, 001D, 001L, 001R SEE 25-41-51-12C FOR DET		001

- ITEM NOT ILLUSTRATED

FIG. ITEM	PART NUMBER	AIRLINE STOCK NUMBER	NOMENCLATURE 1234567	EFF CODE	UNITS PER ASSY
-080D	D2549030511671		. . TOILET UNIT AND TOILET SHROUD NP used on 001H SEE 25-41-51-12D FOR DET		001
-080E	D2549020506271		. . TOILET UNIT AND TOILET SHROUD NP used on 001J, 001K, 001Q SEE 25-41-51-12C FOR DET		001
090A	D2549010513872		. . PAN-FLOOR NP used on 001A, 001P SEE 25-41-51-13C FOR DET		001
-090B	D2549020500272		. . PAN-FLOOR NP used on 001B SEE 25-41-51-130 FOR DET		001
-090C	D2549030411672		. . PAN-FLOOR NP used on 001C, 001D, 001L, 001R SEE 25-41-51-13R FOR DET		001
-090D	D2549030504072		. . PAN-FLOOR NP used on 001E, 001G SEE 25-41-51-13B FOR DET		001
-090E	D2549010513672		. . PAN-FLOOR NP used on 001F, 001N SEE 25-41-51-13D FOR DET		001
-090F	D2549030511672		. . PAN-FLOOR NP used on 001H SEE 25-41-51-13T FOR DET		001
-090G	D2549020506272		. . PAN-FLOOR NP used on 001J SEE 25-41-51-13B FOR DET		001
-090H	D2549020605672		. . PAN-FLOOR NP used on 001K, 001Q SEE 25-41-51-13B FOR DET		001

- ITEM NOT ILLUSTRATED

FIG. ITEM	PART NUMBER	AIRLINE STOCK NUMBER	NOMENCLATURE 1234567		EFF CODE	UNITS PER ASSY
-090J	D2549020604872		. . PAN-FLOOR used on 001M SEE 25-41-51-13C FOR DET	NP		001
100A	D2549010513873		. . LIGHT-DOOR used on 001A, 001P SEE 25-41-51-140 FOR DET	NP		001
-100B	D2549020602673		. . LIGHT-DOOR used on 001B, 001E, 001F, 001G, 001N SEE 25-41-51-140 FOR DET	NP		001
-100C	D2549030506073		. . LIGHT-DOOR used on 001C, 001D, 001R SEE 25-41-51-140 FOR DET	NP		001
-100D	D2549010512673		. . LIGHT-DOOR used on 001H, 001M SEE 25-41-51-140 FOR DET	NP		001
-100E	D2549020613673		. . LIGHT-DOOR used on 001J, 001K, 001Q SEE 25-41-51-140 FOR DET	NP		001
-100F	D2549030508473		. . LIGHT-DOOR used on 001L SEE 25-41-51-140 FOR DET	NP		001
110A	D2549010511074		. . WASHBASIN UNIT used on 001A, 001P SEE 25-41-51-15C FOR DET	NP		001
-110B	D2549020500274		. . WASHBASIN UNIT used on 001B SEE 25-41-51-150 FOR DET	NP		001
-110C	D2549030506074		. . WASHBASIN UNIT used on 001C, 001D, 001R SEE 25-41-51-15C FOR DET	NP		001

- ITEM NOT ILLUSTRATED

FIG. ITEM	PART NUMBER	AIRLINE STOCK NUMBER	NOMENCLATURE 1234567	EFF CODE	UNITS PER ASSY
-110D	D2549010509874		. . WASHBASIN UNIT NP used on 001E, 001G SEE 25-41-51-15D FOR DET		001
-110E	D2549010510474		. . WASHBASIN UNIT NP used on 001F, 001N SEE 25-41-51-15C FOR DET		001
-110F	D2549010603674		. . WASHBASIN UNIT NP used on 001H SEE 25-41-51-15C FOR DET		001
-110G	D2549030513874		. . WASHBASIN UNIT NP used on 001J SEE 25-41-51-15F FOR DET		001
-110H	D2549020613674		. . WASHBASIN UNIT NP used on 001K, 001Q SEE 25-41-51-15F FOR DET		001
-110J	D2549020704674		. . WASHBASIN UNIT NP used on 001L SEE 25-41-51-15G FOR DET		001
-110K	D2549020614474		. . WASHBASIN UNIT NP used on 001M SEE 25-41-51-15F FOR DET		001
120A	D2549020607075		. . DOOR ASSY-WASHBASIN UNIT NP used on 001A, 001E, 001F, 001H, 001M, 001N, 001P SEE 25-41-51-16B FOR DET		001
-120B	D2549020603075		. . DOOR ASSY-WASHBASIN UNIT NP used on 001B SEE 25-41-51-16A FOR DET		001

- ITEM NOT ILLUSTRATED

FIG. ITEM	PART NUMBER	AIRLINE STOCK NUMBER	NOMENCLATURE 1234567		EFF CODE	UNITS PER ASSY
-120C	D2549030506075		. . DOOR ASSY-WASHBASIN UNIT used on 001C, 001D, 001L, 001R SEE 25-41-51-16B FOR DET	NP		001
-120D	D2549030504875		. . DOOR ASSY-WASHBASIN UNIT used on 001G SEE 25-41-51-16B FOR DET	NP		001
-120E	D2549030505475		. . DOOR ASSY-WASHBASIN UNIT used on 001J, 001K, 001Q SEE 25-41-51-16B FOR DET	NP		001
130A	D2549030504876		. . PANEL ASSY-WASHBASIN UNIT used on 001A, 001E, 001F, 001G, 001H, 001M, 001N, 001P SEE 25-41-51-17C FOR DET	NP		001
-130B	D2549010506876		. . PANEL ASSY-WASHBASIN UNIT used on 001B SEE 25-41-51-17B FOR DET	NP		001
-130C	D2549030506076		. . PANEL ASSY-WASHBASIN UNIT used on 001C, 001D, 001L, 001R SEE 25-41-51-17C FOR DET	NP		001
-130D	D2549020506276		. . PANEL ASSY-WASHBASIN UNIT used on 001J, 001K, 001Q SEE 25-41-51-17C FOR DET	NP		001

- ITEM NOT ILLUSTRATED

FIG. ITEM	PART NUMBER	AIRLINE STOCK NUMBER	NOMENCLATURE 1234567		EFF CODE	UNITS PER ASSY
140A	D2549030504877		. . BIN-WASTE,CHUTE-WASTE AND EXTINGUISHER-FIRE used on 001A, 001C, 001D, 001E, 001F, 001G, 001H, 001K, 001L, 001M, 001N, 001P, 001Q, 001R SEE 25-41-51-180 FOR DET	NP		001
-140B	D2549020600477		. . BIN-WASTE,CHUTE-WASTE AND EXTINGUISHER-FIRE used on 001B SEE 25-41-51-180 FOR DET	NP		001
-140C	D2549020506277		. . BIN-WASTE,CHUTE-WASTE AND EXTINGUISHER-FIRE used on 001J SEE 25-41-51-180 FOR DET	NP		001
150A	D2549010513878		. . CABINET-SERVICE PRE VSB A2-254-25-037 used on 001A SEE 25-41-51-19F FOR DET	NP		001
-150B	D2549020601078		. . CABINET-SERVICE used on 001B SEE 25-41-51-19B FOR DET	NP		001
-150C	D2549030506078		. . CABINET-SERVICE used on 001C, 001D, 001L, 001R SEE 25-41-51-19E FOR DET	NP		001
-150D	D2549030504078		. . CABINET-SERVICE used on 001E, 001G SEE 25-41-51-19E FOR DET	NP		001
-150E	D2549030504878		. . CABINET-SERVICE used on 001F, 001H, 001N SEE 25-41-51-19E FOR DET	NP		001

- ITEM NOT ILLUSTRATED

FIG. ITEM	PART NUMBER	AIRLINE STOCK NUMBER	NOMENCLATURE 1234567	EFF CODE	UNITS PER ASSY
-150F	D2549030505478		. . CABINET-SERVICE NP used on 001J SEE 25-41-51-19E FOR DET		001
-150G	D2549020605678		. . CABINET-SERVICE NP used on 001K, 001Q SEE 25-41-51-19E FOR DET		001
-150H	D2549030505878		. . CABINET-SERVICE NP used on 001M SEE 25-41-51-19E FOR DET		001
-150J	R22540117500278		. . CABINET-SERVICE NP POST VSB A2-254-25-037 used on 001P SEE 25-41-51-19F FOR DET		001
160A	D2549010513879		. . TABLE-NURSING NP used on 001A, 001P SEE 25-41-51-20A FOR DET		001
-160B	D2549010512679		. . TABLE-NURSING NP used on 001B, 001E, 001G, 001M SEE 25-41-51-20A FOR DET		001
-160C	D2549030508479		. . TABLE-NURSING NP used on 001C, 001D, 001L, 001R SEE 25-41-51-20A FOR DET		001
-160D	D2549010510679		. . TABLE-NURSING NP used on 001F, 001H, 001N SEE 25-41-51-20A FOR DET		001
-160E	D2549020613679		. . TABLE-NURSING NP used on 001J, 001K, 001Q SEE 25-41-51-20A FOR DET		001
170A	D2549010513880		. . VENTILATION SYSTEM NP used on 001A, 001P SEE 25-41-51-210 FOR DET		001

- ITEM NOT ILLUSTRATED

FIG. ITEM	PART NUMBER	AIRLINE STOCK NUMBER	NOMENCLATURE 1234567		EFF CODE	UNITS PER ASSY
-170B	D2549010500080		. . VENTILATION SYSTEM used on 001B SEE 25-41-51-210 FOR DET	NP		001
-170C	D2549030506080		. . VENTILATION SYSTEM used on 001C, 001D, 001R SEE 25-41-51-210 FOR DET	NP		001
-170D	D2549030504880		. . VENTILATION SYSTEM used on 001E, 001F, 001G, 001N SEE 25-41-51-210 FOR DET	NP		001
-170E	D2549010514280		. . VENTILATION SYSTEM used on 001H, 001M SEE 25-41-51-21A FOR DET	NP		001
-170F	D2549020507080		. . VENTILATION SYSTEM used on 001J, 001K, 001Q SEE 25-41-51-21A FOR DET	NP		001
-170G	D2549030508480		. . VENTILATION SYSTEM used on 001L SEE 25-41-51-21A FOR DET	NP		001
180A	D2549030504881		. . WATER SYSTEM-POTABLE used on 001A, 001E, 001G, 001H, 001M, 001P SEE 25-41-51-22D FOR DET	NP		001
-180B	D2549010506881		. . WATER SYSTEM-POTABLE used on 001B SEE 25-41-51-220 FOR DET	NP		001
-180C	D2549030504081		. . WATER SYSTEM-POTABLE used on 001C, 001D, 001K, 001L, 001Q, 001R SEE 25-41-51-22G FOR DET	NP		001
-180D	D2549010513681		. . WATER SYSTEM-POTABLE used on 001F, 001N SEE 25-41-51-22H FOR DET	NP		001

- ITEM NOT ILLUSTRATED

FIG. ITEM	PART NUMBER	AIRLINE STOCK NUMBER	NOMENCLATURE 1234567		EFF CODE	UNITS PER ASSY
-180E	D2549020506281		. . WATER SYSTEM-POTABLE used on 001J SEE 25-41-51-22E FOR DET	NP		001
190A	D2549010511082		. . WATER SYSTEM-WASTE used on 001A, 001E, 001G, 001H, 001P SEE 25-41-51-23B FOR DET	NP		001
-190B	D2549010506882		. . WATER SYSTEM-WASTE used on 001B SEE 25-41-51-23C FOR DET	NP		001
-190C	D2549030506082		. . WATER SYSTEM-WASTE used on 001C, 001D, 001K, 001L, 001Q, 001R SEE 25-41-51-23B FOR DET	NP		001
-190D	D2549030504082		. . WATER SYSTEM-WASTE used on 001F, 001N SEE 25-41-51-23B FOR DET	NP		001
-190E	D2549020506282		. . WATER SYSTEM-WASTE used on 001J SEE 25-41-51-23B FOR DET	NP		001
-190F	D2549030504882		. . WATER SYSTEM-WASTE used on 001M SEE 25-41-51-23B FOR DET	NP		001
200A	D2549030504883		. . ELECTRICAL SYSTEM used on 001A, 001C, 001D, 001E, 001G, 001P, 001R SEE 25-41-51-26C FOR DET	NP		001
-200B	D2549020600483		. . ELECTRICAL SYSTEM used on 001B SEE 25-41-51-260 FOR DET	NP		001

- ITEM NOT ILLUSTRATED

FIG. ITEM	PART NUMBER	AIRLINE STOCK NUMBER	NOMENCLATURE 1234567		EFF CODE	UNITS PER ASSY
-200C	D2549010601483		. . ELECTRICAL SYSTEM used on 001F SEE 25-41-51-26D FOR DET	NP		001
-200D	D2549030604683		. . ELECTRICAL SYSTEM used on 001H SEE 25-41-51-26E FOR DET	NP		001
-200E	D2549030603883		. . ELECTRICAL SYSTEM used on 001J, 001L SEE 25-41-51-26E FOR DET	NP		001
-200F	D2549030604883		. . ELECTRICAL SYSTEM used on 001K, 001Q SEE 25-41-51-26E FOR DET	NP		001
-200G	D2549030605283		. . ELECTRICAL SYSTEM used on 001M SEE 25-41-51-26F FOR DET	NP		001
-200H	D2549010513783		. . ELECTRICAL SYSTEM used on 001N SEE 25-41-51-26D FOR DET	NP		001

- ITEM NOT ILLUSTRATED

THIS PAGE IS INTENTIONALLY LEFT BLANK

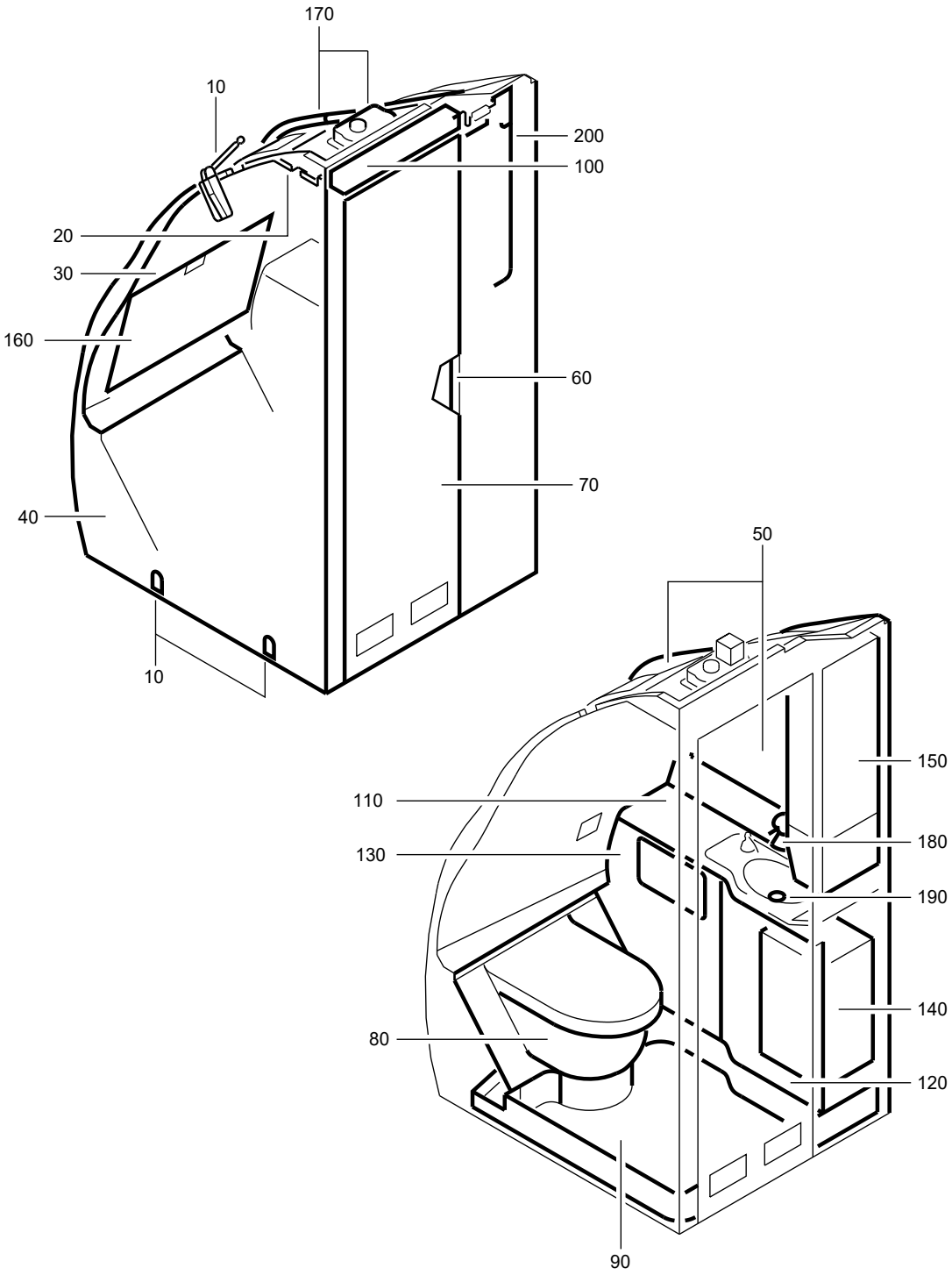

F_PL_254151_41_C_01_00

LAVATORY A ASSY
Figure 41C/EN254151SHEET41C01

FIG. ITEM	PART NUMBER	AIRLINE STOCK NUMBER	NOMENCLATURE 1234567	EFF CODE	UNITS PER ASSY
41C					
-001A	D2549020711200		. LAVATORY A ASSY SEE SIL 25-117 FOR DET		RF
-001B	D2549020712200		. LAVATORY A ASSY SEE SIL 25-117 FOR DET		RF
-001C	D2549030605000		. LAVATORY A ASSY PRE VSB A2-254-25-080 SEE SIL 25-117 FOR DET		RF
-001D	D2549020711000		. LAVATORY A ASSY SEE SIL 25-117 FOR DET		RF
-001E	D2549020711400		. LAVATORY A ASSY PRE VSB A2-254-25-042 SEE SIL 25-117 FOR DET		RF
-001F	D2549030603600		. LAVATORY A ASSY SEE SIL 25-117 FOR DET PRE VSB A2-254-25-054		RF
-001G	D2549010604600		. LAVATORY A ASSY SEE SIL 25-117 FOR DET		RF
-001H	D2549010604400		. LAVATORY A ASSY PRE VSB A2-254-25-108 SEE SIL 25-117 FOR DET		RF
-001J	D2549020706200		. LAVATORY A ASSY SEE SIL 25-117 FOR DET		RF
-001K	D2549020710200		. LAVATORY A ASSY PRE VSB A2-254-25-069 PRE VSB A2-254-25-100 SEE SIL 25-117 FOR DET		RF
-001L	D2549030603400		. LAVATORY A ASSY SEE SIL 25-117 FOR DET		RF

- ITEM NOT ILLUSTRATED

FIG. ITEM	PART NUMBER	AIRLINE STOCK NUMBER	NOMENCLATURE 1234567		EFF CODE	UNITS PER ASSY
-001M	D2549020709600		. LAVATORY A ASSY SEE SIL 25-117 FOR DET			RF
-001N	R225401152-002		. LAVATORY A ASSY POST VSB A2-254-25-042 SEE SIL 25-117 FOR DET			RF
-001P	R225401168-018		. LAVATORY A ASSY SEE SIL 25-117 FOR DET POST VSB A2-254-25-054			RF
-001Q	R225401172-010		. LAVATORY A ASSY POST VSB A2-254-25-080 SEE SIL 25-117 FOR DET			RF
-001R	R225401136-010		. LAVATORY A ASSY POST VSB A2-254-25-069			RF
-001S	R225401136-020		. LAVATORY A ASSY POST VSB A2-254-25-100			RF
-001T	R225401145-012		. LAVATORY A ASSY POST VSB A2-254-25-108			RF
010A	D2549030514661		. . ATTACHMENT-LAVATORY used on 001A, 001B SEE 25-41-51-02A FOR DET	NP		001
-010B	D2549030514861		. . ATTACHMENT-LAVATORY used on 001C, 001J, 001K, 001Q, 001R, 001S SEE 25-41-51-02A FOR DET	NP		001
-010C	D2549020700461		. . ATTACHMENT-LAVATORY used on 001E, 001G, 001H, 001N, 001T SEE 25-41-51-02A FOR DET	NP		001
-010D	D2549030510261		. . ATTACHMENT-LAVATORY used on 001F, 001P SEE 25-41-51-02A FOR DET	NP		001

- ITEM NOT ILLUSTRATED

FIG. ITEM	PART NUMBER	AIRLINE STOCK NUMBER	NOMENCLATURE 1234567		EFF CODE	UNITS PER ASSY
-010E	D2549020705861		. . ATTACHMENT-LAVATORY used on 001D, 001L, 001M SEE 25-41-51-02D FOR DET	NP		001
020A	D2549020602663		. . PANEL-CEILING used on 001A, 001B, 001C, 001D, 001E, 001G, 001H, 001J, 001K, 001L, 001M, 001N, 001Q, 001R, 001S, 001T SEE 25-41-51-040 FOR DET	NP		001
-020B	D2549030507263		. . PANEL-CEILING used on 001F, 001P SEE 25-41-51-040 FOR DET	NP		001
030A	D2549010512664		. . WALL-REAR used on 001A, 001B, 001C, 001D, 001E, 001G, 001J, 001K, 001L, 001M, 001N, 001Q, 001R, 001S SEE 25-41-51-05B FOR DET	NP		001
-030B	D2549030508664		. . WALL-REAR used on 001F, 001P SEE 25-41-51-05B FOR DET	NP		001
-030C	D2549010514464		. . WALL-REAR used on 001H, 001T SEE 25-41-51-05B FOR DET	NP		001
040A	D2549030509065		. . WALL-SIDE used on 001A, 001B SEE 25-41-51-06K FOR DET	NP		001
-040B	D2549030509865		. . WALL-SIDE PRE VSB A2-254-25-080 used on 001C SEE 25-41-51-06N FOR DET	NP		001

- ITEM NOT ILLUSTRATED

FIG. ITEM	PART NUMBER	AIRLINE STOCK NUMBER	NOMENCLATURE 1234567	EFF CODE	UNITS PER ASSY
-040C	D2549020614465		. . WALL-SIDE NP used on 001D, 001L, 001M SEE 25-41-51-06L FOR DET		001
-040D	D2549020703465		. . WALL-SIDE NP PRE VSB A2-254-25-042 used on 001E SEE 25-41-51-06P FOR DET		001
-040E	D2549030510265		. . WALL-SIDE NP PRE VSB A2-254-25-054 used on 001F SEE 25-41-51-06N FOR DET		001
-040F	D2549010602065		. . WALL-SIDE NP used on 001G SEE 25-41-51-06N FOR DET		001
-040G	D2549010514665		. . WALL-SIDE NP used on 001H, 001T SEE 25-41-51-06N FOR DET		001
-040H	D2549020706265		. . WALL-SIDE NP used on 001J SEE 25-41-51-06M FOR DET		001
-040J	D2549030510865		. . WALL-SIDE NP used on 001K, 001R, 001S SEE 25-41-51-06M FOR DET		001
-040K	R22540115200065		. . WALL-SIDE NP POST VSB A2-254-25-042 used on 001N SEE 25-41-51-06P FOR DET		001
-040L	R22540116800465		. . WALL-SIDE NP POST VSB A2-254-25-054 used on 001P SEE 25-41-51-06N FOR DET		001

- ITEM NOT ILLUSTRATED

FIG. ITEM	PART NUMBER	AIRLINE STOCK NUMBER	NOMENCLATURE 1234567	EFF CODE	UNITS PER ASSY
-040M	R22540117200665		. . WALL-SIDE NP POST VSB A2-254-25-080 used on 001Q SEE 25-41-51-06N FOR DET		001
050A	D2549020607666		. . HOUSING NP used on 001A, 001B, 001J SEE 25-41-51-07D FOR DET		001
-050B	D2549020607066		. . HOUSING NP used on 001C, 001H, 001Q, 001T SEE 25-41-51-07Y FOR DET		001
-050C	D2549030505866		. . HOUSING NP used on 001D, 001L, 001M SEE 25-41-51-07D FOR DET		001
-050D	D2549020703466		. . HOUSING NP used on 001E, 001N SEE 25-41-51-07G FOR DET		001
-050E	D2549030507266		. . HOUSING NP used on 001F, 001P SEE 25-41-51-07E FOR DET		001
-050F	D2549010602066		. . HOUSING NP used on 001G SEE 25-41-51-07F FOR DET		001
-050G	D2549030510866		. . HOUSING NP used on 001K, 001R, 001S SEE 25-41-51-07F FOR DET		001
060A	D2549010500069		. . DOOR INSTL NP used on 001A, 001B, 001C, 001D, 001E, 001F, 001G, 001H, 001J, 001K, 001L, 001M, 001N, 001P, 001Q, 001R, 001S, 001T SEE 25-41-51-100 FOR DET		001

- ITEM NOT ILLUSTRATED

FIG. ITEM	PART NUMBER	AIRLINE STOCK NUMBER	NOMENCLATURE 1234567	EFF CODE	UNITS PER ASSY
070A	A225400276-592		. . DOOR ASSY-SINGLE used on 001A, 001B, 001H, 001T SEE 25-41-51-11E FOR DET		001
-070B	A225400276-934		. . DOOR ASSY-SINGLE used on 001C, 001Q SEE 25-41-51-11F FOR DET		001
-070C	A225400276-588		. . DOOR ASSY-SINGLE used on 001D, 001L, 001M SEE 25-41-51-11F FOR DET		001
-070D	A225400276-946		. . DOOR ASSY-SINGLE used on 001E, 001N SEE 25-41-51-11G FOR DET		001
-070E	A225400276-932		. . DOOR ASSY-SINGLE used on 001F, 001P SEE 25-41-51-11D FOR DET		001
-070F	A225400276-582		. . DOOR ASSY-SINGLE used on 001G SEE 25-41-51-11F FOR DET		001
-070G	A225400276-942		. . DOOR ASSY-SINGLE used on 001J SEE 25-41-51-11F FOR DET		001
-070H	A225400276-576		. . DOOR ASSY-SINGLE used on 001K, 001R, 001S SEE 25-41-51-11E FOR DET		001
080A	D2549010510271		. . TOILET UNIT AND TOILET SHROUD NP used on 001A, 001B SEE 25-41-51-12C FOR DET		001

- ITEM NOT ILLUSTRATED

FIG. ITEM	PART NUMBER	AIRLINE STOCK NUMBER	NOMENCLATURE 1234567		EFF CODE	UNITS PER ASSY
-080B	D2549020604271		. . TOILET UNIT AND TOILET SHROUD used on 001C, 001D, 001E, 001H, 001K, 001L, 001M, 001N, 001Q, 001R, 001S, 001T SEE 25-41-51-12C FOR DET	NP		001
-080C	D2549030507271		. . TOILET UNIT AND TOILET SHROUD used on 001F, 001P SEE 25-41-51-12D FOR DET	NP		001
-080D	D2549010602071		. . TOILET UNIT AND TOILET SHROUD used on 001G SEE 25-41-51-12D FOR DET	NP		001
-080E	D2549020607671		. . TOILET UNIT AND TOILET SHROUD used on 001J SEE 25-41-51-12C FOR DET	NP		001
090A	D2549020606072		. . PAN-FLOOR used on 001A SEE 25-41-51-13C FOR DET	NP		001
-090B	D2549020611672		. . PAN-FLOOR used on 001B SEE 25-41-51-13C FOR DET	NP		001
-090C	D2549030507072		. . PAN-FLOOR used on 001C, 001Q SEE 25-41-51-13C FOR DET	NP		001
-090D	D2549030514072		. . PAN-FLOOR used on 001D, 001L, 001M SEE 25-41-51-13D FOR DET	NP		001
-090E	D2549020704272		. . PAN-FLOOR used on 001E, 001N SEE 25-41-51-13D FOR DET	NP		001

- ITEM NOT ILLUSTRATED

FIG. ITEM	PART NUMBER	AIRLINE STOCK NUMBER	NOMENCLATURE 1234567	EFF CODE	UNITS PER ASSY
-090F	D2549020512472		. . PAN-FLOOR NP used on 001F, 001P SEE 25-41-51-13H FOR DET		001
-090G	D2549030504672		. . PAN-FLOOR NP used on 001G SEE 25-41-51-13B FOR DET		001
-090H	D2549010513072		. . PAN-FLOOR NP used on 001H, 001T SEE 25-41-51-13C FOR DET		001
-090J	D2549020604872		. . PAN-FLOOR NP used on 001J SEE 25-41-51-13C FOR DET		001
-090K	D2549020702272		. . PAN-FLOOR NP used on 001K, 001R, 001S SEE 25-41-51-13D FOR DET		001
100A	D2549010512673		. . LIGHT-DOOR NP used on 001A, 001B, 001C, 001D, 001E, 001G, 001H, 001J, 001K, 001L, 001M, 001N, 001Q, 001R, 001S, 001T SEE 25-41-51-140 FOR DET		001
-100B	D2549030508673		. . LIGHT-DOOR NP used on 001F, 001P SEE 25-41-51-14A FOR DET		001
110A	D2549030514674		. . WASHBASIN UNIT NP used on 001A, 001B, 001E, 001N SEE 25-41-51-15G FOR DET		001
-110B	D2549030509874		. . WASHBASIN UNIT NP used on 001C, 001H, 001Q, 001T SEE 25-41-51-15G FOR DET		001

- ITEM NOT ILLUSTRATED

FIG. ITEM	PART NUMBER	AIRLINE STOCK NUMBER	NOMENCLATURE 1234567		EFF CODE	UNITS PER ASSY
-110C	D2549020614474		. . WASHBASIN UNIT used on 001D, 001L, 001M SEE 25-41-51-15F FOR DET	NP		001
-110D	D2549030600874		. . WASHBASIN UNIT used on 001F, 001P SEE 25-41-51-15G FOR DET	NP		001
-110E	D2549010602074		. . WASHBASIN UNIT used on 001G SEE 25-41-51-15G FOR DET	NP		001
-110F	D2549020706274		. . WASHBASIN UNIT used on 001J SEE 25-41-51-15C FOR DET	NP		001
-110G	D2549020710274		. . WASHBASIN UNIT used on 001K, 001R, 001S SEE 25-41-51-15H FOR DET	NP		001
120A	D2549010509475		. . DOOR ASSY-WASHBASIN UNIT used on 001A, 001B SEE 25-41-51-16B FOR DET	NP		001
-120B	D2549020607075		. . DOOR ASSY-WASHBASIN UNIT used on 001C, 001D, 001E, 001H, 001K, 001L, 001M, 001N, 001Q, 001R, 001S, 001T SEE 25-41-51-16B FOR DET	NP		001
-120C	D2549030507275		. . DOOR ASSY-WASHBASIN UNIT used on 001F, 001P SEE 25-41-51-16C FOR DET	NP		001
-120D	D2549030504675		. . DOOR ASSY-WASHBASIN UNIT used on 001G SEE 25-41-51-16B FOR DET	NP		001

- ITEM NOT ILLUSTRATED

FIG. ITEM	PART NUMBER	AIRLINE STOCK NUMBER	NOMENCLATURE 1234567		EFF CODE	UNITS PER ASSY
-120E	D2549020607675		. . DOOR ASSY-WASHBASIN UNIT used on 001J SEE 25-41-51-16C FOR DET	NP		001
130A	D2549010509476		. . PANEL ASSY-WASHBASIN UNIT used on 001A, 001B SEE 25-41-51-17C FOR DET	NP		001
-130B	D2549030504876		. . PANEL ASSY-WASHBASIN UNIT used on 001C, 001D, 001E, 001H, 001K, 001L, 001M, 001N, 001Q, 001R, 001S, 001T SEE 25-41-51-17C FOR DET	NP		001
-130C	D2549030507276		. . PANEL ASSY-WASHBASIN UNIT used on 001F, 001P SEE 25-41-51-17D FOR DET	NP		001
-130D	D2549030504676		. . PANEL ASSY-WASHBASIN UNIT used on 001G SEE 25-41-51-17C FOR DET	NP		001
-130E	D2549020607676		. . PANEL ASSY-WASHBASIN UNIT used on 001J SEE 25-41-51-17C FOR DET	NP		001
140A	D2549030504877		. . BIN-WASTE,CHUTE-WASTE AND EXTINGUISHER-FIRE used on 001A, 001B, 001C, 001D, 001E, 001F, 001G, 001H, 001J, 001K, 001L, 001M, 001N, 001P, 001Q, 001R, 001S, 001T SEE 25-41-51-180 FOR DET	NP		001

- ITEM NOT ILLUSTRATED

FIG. ITEM	PART NUMBER	AIRLINE STOCK NUMBER	NOMENCLATURE 1234567		EFF CODE	UNITS PER ASSY
150A	D2549010510278		. . CABINET-SERVICE used on 001A, 001B SEE 25-41-51-19F FOR DET	NP		001
-150B	D2549030504878		. . CABINET-SERVICE PRE VSB A2-254-25-042 PRE VSB A2-254-25-080 PRE VSB A2-254-25-108 used on 001C, 001E, 001H, 001J, 001K, 001R, 001S SEE 25-41-51-19E FOR DET	NP		001
-150C	D2549030505878		. . CABINET-SERVICE used on 001D, 001L, 001M SEE 25-41-51-19E FOR DET	NP		001
-150D	D2549030507278		. . CABINET-SERVICE PRE VSB A2-254-25-054 used on 001F SEE 25-41-51-19F FOR DET	NP		001
-150E	D2549030504678		. . CABINET-SERVICE used on 001G SEE 25-41-51-19E FOR DET	NP		001
-150F	R22540114200078		. . CABINET-SERVICE POST VSB A2-254-25-042 used on 001N SEE 25-41-51-19E FOR DET	NP		001
-150G	R22540116800478		. . CABINET-SERVICE POST VSB A2-254-25-054 used on 001P SEE 25-41-51-19F FOR DET	NP		001
-150H	R22540114500278		. . CABINET-SERVICE POST VSB A2-254-25-080 used on 001Q SEE 25-41-51-19E FOR DET	NP		001

- ITEM NOT ILLUSTRATED

FIG. ITEM	PART NUMBER	AIRLINE STOCK NUMBER	NOMENCLATURE 1234567	EFF CODE	UNITS PER ASSY
-150J	R22540114501478		. . CABINET-SERVICE NP POST VSB A2-254-25-108 used on 001T SEE 25-41-51-19E FOR DET		001
160A	D2549010512679		. . TABLE-NURSING NP used on 001A, 001B, 001D, 001E, 001H, 001L, 001M, 001N, 001T SEE 25-41-51-20A FOR DET		001
-160B	D2549010510679		. . TABLE-NURSING NP used on 001C, 001J, 001K, 001Q, 001R, 001S SEE 25-41-51-20A FOR DET		001
-160C	D2549030508679		. . TABLE-NURSING NP used on 001F, 001P SEE 25-41-51-20A FOR DET		001
-160D	D2549010602079		. . TABLE-NURSING NP used on 001G SEE 25-41-51-20A FOR DET		001
170A	D2549010514280		. . VENTILATION SYSTEM NP used on 001A, 001B, 001C, 001D, 001E, 001G, 001H, 001J, 001K, 001L, 001M, 001N, 001Q, 001R, 001S, 001T SEE 25-41-51-21A FOR DET		001
-170B	D2549030508680		. . VENTILATION SYSTEM NP used on 001F, 001P SEE 25-41-51-21A FOR DET		001
180A	D2549030504881		. . WATER SYSTEM-POTABLE NP PRE VSB A2-254-25-108 used on 001A, 001B, 001C, 001D, 001E, 001F, 001G, 001H, 001J, 001K, 001L, 001N, 001P, 001Q, 001R, 001S SEE 25-41-51-22D FOR DET		001

- ITEM NOT ILLUSTRATED

FIG. ITEM	PART NUMBER	AIRLINE STOCK NUMBER	NOMENCLATURE 1234567		EFF CODE	UNITS PER ASSY
-180B	D2549010606081		. . WATER SYSTEM-POTABLE used on 001M SEE 25-41-51-22D FOR DET	NP		001
-180C	R22540114501281		. . WATER SYSTEM-POTABLE POST VSB A2-254-25-108 used on 001T SEE 25-41-51-22D FOR DET	NP		001
190A	D2549010511082		. . WATER SYSTEM-WASTE PRE VSB A2-254-25-108 used on 001A, 001B, 001C, 001E, 001F, 001G, 001H, 001J, 001K, 001N, 001P, 001Q, 001R, 001S SEE 25-41-51-23B FOR DET	NP		001
-190B	D2549030504882		. . WATER SYSTEM-WASTE used on 001D, 001L, 001M SEE 25-41-51-23B FOR DET	NP		001
-190C	R22540114501482		. . WATER SYSTEM-WASTE POST VSB A2-254-25-108 used on 001T SEE 25-41-51-23B FOR DET	NP		001
200A	D2549010603883		. . ELECTRICAL SYSTEM used on 001A, 001B, 001D, 001E, 001F, 001G, 001H, 001J, 001K, 001L, 001N, 001P, 001R, 001S, 001T SEE 25-41-51-26E FOR DET	NP		001
-200B	D2549030605083		. . ELECTRICAL SYSTEM used on 001C, 001Q SEE 25-41-51-26E FOR DET	NP		001
-200C	D2549020710683		. . ELECTRICAL SYSTEM used on 001M SEE 25-41-51-26K FOR DET	NP		001

- ITEM NOT ILLUSTRATED

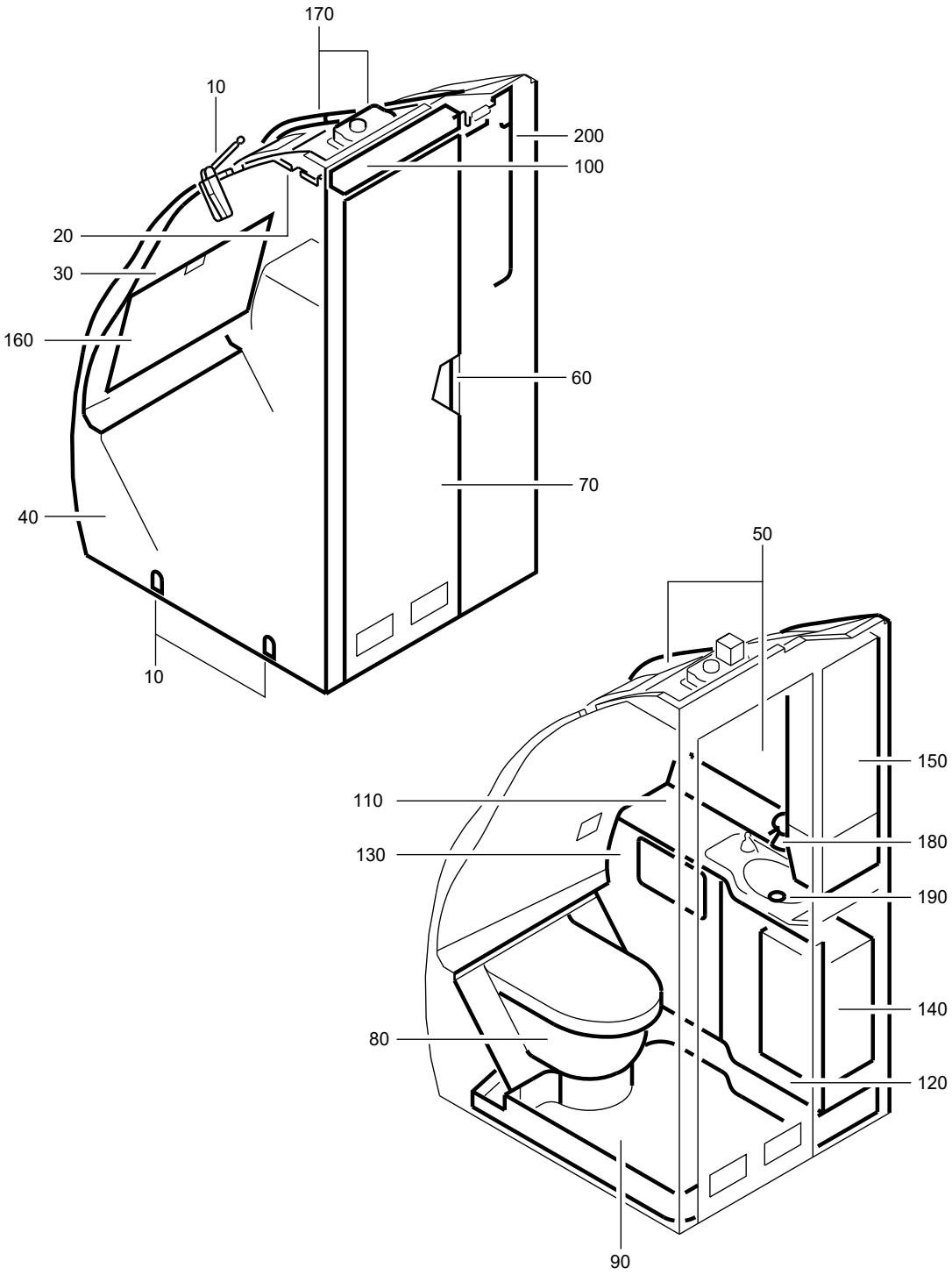

F_PL_254151_41_D_01_00

LAVATORY A ASSY
Figure 41D/EN254151SHEET41D01

FIG. ITEM	PART NUMBER	AIRLINE STOCK NUMBER	NOMENCLATURE 1234567	EFF CODE	UNITS PER ASSY
41D					
-001A	D2549020707000		. LAVATORY A ASSY SEE SIL 25-117 FOR DET		RF
-001B	D2549020706600		. LAVATORY A ASSY SEE SIL 25-117 FOR DET		RF
-001C	D2549020709000		. LAVATORY A ASSY SEE SIL 25-117 FOR DET		RF
-001D	D2549030605800		. LAVATORY A ASSY SEE SIL 25-117 FOR DET		RF
-001E	D2549030602600		. LAVATORY A ASSY SEE SIL 25-117 FOR DET		RF
-001F	D2549030602200		. LAVATORY A ASSY SEE SIL 25-117 FOR DET		RF
-001G	D2549030602400		. LAVATORY A ASSY SEE SIL 25-117 FOR DET		RF
-001H	D2549030603000		. LAVATORY A ASSY SEE SIL 25-117 FOR DET		RF
-001J	D2549030602800		. LAVATORY A ASSY PRE VSB A2-254-25-046 SEE SIL 25-117 FOR DET		RF
-001K	D2549030601800		. LAVATORY A ASSY SEE SIL 25-117 FOR DET		RF
-001L	D2549010604000		. LAVATORY A ASSY SEE SIL 25-117 FOR DET		RF
-001M	D2549020710400		. LAVATORY A ASSY SEE SIL 25-117 FOR DET		RF
-001N	D2549010604000		. LAVATORY A ASSY POST SB 25-1289 SEE SIL 25-117 FOR DET		RF

- ITEM NOT ILLUSTRATED

FIG. ITEM	PART NUMBER	AIRLINE STOCK NUMBER	NOMENCLATURE 1234567		EFF CODE	UNITS PER ASSY
-001P	R225401134-022		. LAVATORY A ASSY POST VSB A2-254-25-046			RF
010A	D2549030514861		. . ATTACHMENT-LAVATORY used on 001A, 001B, 001C, 001M SEE 25-41-51-02A FOR DET	NP		001
-010B	D2549020700461		. . ATTACHMENT-LAVATORY used on 001D, 001L, 001N SEE 25-41-51-02A FOR DET	NP		001
-010C	D2549030514661		. . ATTACHMENT-LAVATORY used on 001E SEE 25-41-51-02A FOR DET	NP		001
-010D	D2549030510061		. . ATTACHMENT-LAVATORY used on 001F SEE 25-41-51-02A FOR DET	NP		001
-010E	D2549030603061		. . ATTACHMENT-LAVATORY used on 001H SEE 25-41-51-02A FOR DET	NP		001
-010F	D2549030513061		. . ATTACHMENT-LAVATORY used on 001J, 001P SEE 25-41-51-02A FOR DET	NP		001
-010G	D2549030513861		. . ATTACHMENT-LAVATORY used on 001K SEE 25-41-51-02A FOR DET	NP		001
-010H	D2549020705861		. . ATTACHMENT-LAVATORY used on 001G SEE 25-41-51-02D FOR DET	NP		001
020A	D2549020602663		. . PANEL-CEILING used on 001A, 001B, 001C, 001D, 001E, 001G, 001L, 001M, 001N SEE 25-41-51-040 FOR DET	NP		001

- ITEM NOT ILLUSTRATED

FIG. ITEM	PART NUMBER	AIRLINE STOCK NUMBER	NOMENCLATURE 1234567		EFF CODE	UNITS PER ASSY
-020B	D2549030506063		. . PANEL-CEILING used on 001F SEE 25-41-51-040 FOR DET	NP		001
-020C	D2549010513863		. . PANEL-CEILING used on 001H SEE 25-41-51-040 FOR DET	NP		001
-020D	D2549020602863		. . PANEL-CEILING used on 001J, 001K, 001P SEE 25-41-51-040 FOR DET	NP		001
030A	D2549010512664		. . WALL-REAR used on 001A, 001B, 001C, 001D, 001E, 001G, 001L, 001M SEE 25-41-51-05B FOR DET	NP		001
-030B	D2549030601464		. . WALL-REAR used on 001F SEE 25-41-51-05C FOR DET	NP		001
-030C	D2549010600264		. . WALL-REAR used on 001H SEE 25-41-51-05D FOR DET	NP		001
-030D	D2549020613664		. . WALL-REAR used on 001J, 001P SEE 25-41-51-05B FOR DET	NP		001
-030E	D2549030509464		. . WALL-REAR used on 001K SEE 25-41-51-05D FOR DET	NP		001
-030F	D2549020611664		. . WALL-REAR used on 001N SEE 25-41-51-05A FOR DET	NP		001
040A	D2549020614665		. . WALL-SIDE used on 001A SEE 25-41-51-06L FOR DET	NP		001

- ITEM NOT ILLUSTRATED

FIG. ITEM	PART NUMBER	AIRLINE STOCK NUMBER	NOMENCLATURE 1234567	EFF CODE	UNITS PER ASSY
-040B	D2549020701465		. . WALL-SIDE NP used on 001B, 001C SEE 25-41-51-06M FOR DET		001
-040C	D2549030514265		. . WALL-SIDE NP used on 001D SEE 25-41-51-06P FOR DET		001
-040D	D2549020700465		. . WALL-SIDE NP used on 001E SEE 25-41-51-06N FOR DET		001
-040E	D2549030601465		. . WALL-SIDE NP used on 001F SEE 25-41-51-06Q FOR DET		001
-040F	D2549030602465		. . WALL-SIDE NP used on 001G SEE 25-41-51-06R FOR DET		001
-040G	D2549030511865		. . WALL-SIDE NP used on 001H SEE 25-41-51-06M FOR DET		001
-040H	D2549020613665		. . WALL-SIDE NP used on 001J, 001P SEE 25-41-51-06K FOR DET		001
-040J	D2549030513865		. . WALL-SIDE NP used on 001K SEE 25-41-51-06P FOR DET		001
-040K	D2549010601665		. . WALL-SIDE NP used on 001L SEE 25-41-51-06P FOR DET		001
-040L	D2549030510865		. . WALL-SIDE NP used on 001M SEE 25-41-51-06M FOR DET		001

- ITEM NOT ILLUSTRATED

FIG. ITEM	PART NUMBER	AIRLINE STOCK NUMBER	NOMENCLATURE 1234567	EFF CODE	UNITS PER ASSY
-040M	D2549010509065		. . WALL-SIDE NP used on 001N SEE 25-41-51-48E FOR DET		001
050A	D2549020614666		. . HOUSING NP used on 001A SEE 25-41-51-07F FOR DET		001
-050B	D2549020701466		. . HOUSING NP used on 001B, 001C SEE 25-41-51-07F FOR DET		001
-050C	D2549020604266		. . HOUSING NP used on 001D SEE 25-41-51-07D FOR DET		001
-050D	D2549020607066		. . HOUSING NP used on 001E SEE 25-41-51-07Y FOR DET		001
-050E	D2549030506066		. . HOUSING NP used on 001F SEE 25-41-51-07C FOR DET		001
-050F	D2549030511666		. . HOUSING NP used on 001G SEE 25-41-51-07G FOR DET		001
-050G	D2549010513866		. . HOUSING NP used on 001H SEE 25-41-51-07E FOR DET		001
-050H	D2549020605666		. . HOUSING NP used on 001J, 001P SEE 25-41-51-07D FOR DET		001
-050J	D2549020506266		. . HOUSING NP used on 001K SEE 25-41-51-07D FOR DET		001

- ITEM NOT ILLUSTRATED

FIG. ITEM	PART NUMBER	AIRLINE STOCK NUMBER	NOMENCLATURE 1234567		EFF CODE	UNITS PER ASSY
-050K	D2549010513266		. . HOUSING used on 001L SEE 25-41-51-07E FOR DET	NP		001
-050L	D2549030510866		. . HOUSING used on 001M SEE 25-41-51-07F FOR DET	NP		001
-050M	D2549010601066		. . HOUSING used on 001N SEE 25-41-51-07G FOR DET	NP		001
060A	D2549010500069		. . DOOR INSTL used on 001A, 001B, 001C, 001D, 001E, 001G, 001H, 001J, 001K, 001L, 001M, 001P SEE 25-41-51-100 FOR DET	NP		001
-060B	D2549020401269		. . DOOR INSTL POST SB 25-1314 used on 001F, 001N SEE 25-41-51-10A FOR DET	NP		001
070A	A225400276-934		. . DOOR ASSY-SINGLE used on 001A SEE 25-41-51-11F FOR DET			001
-070B	A225400276-926		. . DOOR ASSY-SINGLE used on 001B, 001C SEE 25-41-51-11E FOR DET			001
-070C	A225400276-936		. . DOOR ASSY-SINGLE used on 001D SEE 25-41-51-11G FOR DET			001
-070D	A225400276-942		. . DOOR ASSY-SINGLE used on 001E SEE 25-41-51-11F FOR DET			001

- ITEM NOT ILLUSTRATED

FIG. ITEM	PART NUMBER	AIRLINE STOCK NUMBER	NOMENCLATURE 1234567		EFF CODE	UNITS PER ASSY
-070E	A2254002768930		. . DOOR ASSY-SINGLE POST SB 25-1314 used on 001F SEE 25-41-51-11N FOR DET			001
-070F	A225400276-928		. . DOOR ASSY-SINGLE used on 001G SEE 25-41-51-11F FOR DET			001
-070G	A225400276-574		. . DOOR ASSY-SINGLE used on 001H SEE 25-41-51-11E FOR DET			001
-070H	A225400276-570		. . DOOR ASSY-SINGLE used on 001J, 001P SEE 25-41-51-11E FOR DET			001
-070J	A225400276-590		. . DOOR ASSY-SINGLE used on 001K SEE 25-41-51-11E FOR DET			001
-070K	A225400276-594		. . DOOR ASSY-SINGLE used on 001L SEE 25-41-51-11G FOR DET			001
-070L	A225400276-576		. . DOOR ASSY-SINGLE used on 001M SEE 25-41-51-11E FOR DET			001
-070M	A2254002768594		. . DOOR ASSY-SINGLE used on 001L, 001N SEE 25-41-51-11N FOR DET			001
080A	D2549020608671		. . TOILET UNIT AND TOILET SHROUD used on 001A SEE 25-41-51-12C FOR DET	NP		001

- ITEM NOT ILLUSTRATED

FIG. ITEM	PART NUMBER	AIRLINE STOCK NUMBER	NOMENCLATURE 1234567		EFF CODE	UNITS PER ASSY
-080B	D2549020607671		. . TOILET UNIT AND TOILET SHROUD used on 001B, 001C, 001E SEE 25-41-51-12C FOR DET	NP		001
-080C	D2549030506271		. . TOILET UNIT AND TOILET SHROUD used on 001D SEE 25-41-51-12C FOR DET	NP		001
-080D	D2549030506071		. . TOILET UNIT AND TOILET SHROUD used on 001F SEE 25-41-51-12C FOR DET	NP		001
-080E	D2549030511671		. . TOILET UNIT AND TOILET SHROUD used on 001G SEE 25-41-51-12D FOR DET	NP		001
-080F	D2549020604271		. . TOILET UNIT AND TOILET SHROUD used on 001H, 001M SEE 25-41-51-12C FOR DET	NP		001
-080G	D2549020506271		. . TOILET UNIT AND TOILET SHROUD used on 001J, 001K, 001P SEE 25-41-51-12C FOR DET	NP		001
-080H	D2549010510271		. . TOILET UNIT AND TOILET SHROUD used on 001L, 001N SEE 25-41-51-12C FOR DET	NP		001
090A	D2549020608672		. . PAN-FLOOR used on 001A SEE 25-41-51-13B FOR DET	NP		001

- ITEM NOT ILLUSTRATED

FIG. ITEM	PART NUMBER	AIRLINE STOCK NUMBER	NOMENCLATURE 1234567		EFF CODE	UNITS PER ASSY
-090B	D2549020610672		. . PAN-FLOOR used on 001B, 001C SEE 25-41-51-13C FOR DET	NP		001
-090C	D2549030505272		. . PAN-FLOOR used on 001D SEE 25-41-51-13A FOR DET	NP		001
-090D	D2549020604872		. . PAN-FLOOR used on 001E SEE 25-41-51-13C FOR DET	NP		001
-090E	D2549030411672		. . PAN-FLOOR used on 001F SEE 25-41-51-13R FOR DET	NP		001
-090F	D2549010605672		. . PAN-FLOOR used on 001G SEE 25-41-51-13E FOR DET	NP		001
-090G	D2549030602472		. . PAN-FLOOR used on 001H SEE 25-41-51-13T FOR DET	NP		001
-090H	D2549020605672		. . PAN-FLOOR used on 001J, 001P SEE 25-41-51-13B FOR DET	NP		001
-090J	D2549020506272		. . PAN-FLOOR used on 001K SEE 25-41-51-13B FOR DET	NP		001
-090K	D2549030504072		. . PAN-FLOOR used on 001L SEE 25-41-51-13B FOR DET	NP		001
-090L	D2549020603272		. . PAN-FLOOR used on 001M SEE 25-41-51-13U FOR DET	NP		001

- ITEM NOT ILLUSTRATED

FIG. ITEM	PART NUMBER	AIRLINE STOCK NUMBER	NOMENCLATURE 1234567	EFF CODE	UNITS PER ASSY
-090M	D2549010504472		. . PAN-FLOOR NP used on 001N SEE 25-41-51-13B FOR DET		001
100A	D2549010512673		. . LIGHT-DOOR NP used on 001A, 001B, 001C, 001D, 001E, 001G, 001L, 001M, 001N SEE 25-41-51-140 FOR DET		001
-100B	D2549030508473		. . LIGHT-DOOR NP used on 001F SEE 25-41-51-140 FOR DET		001
-100C	D2549010600273		. . LIGHT-DOOR NP used on 001H SEE 25-41-51-14A FOR DET		001
-100D	D2549020613673		. . LIGHT-DOOR NP used on 001J, 001K, 001P SEE 25-41-51-140 FOR DET		001
110A	D2549020707074		. . WASHBASIN UNIT NP used on 001A SEE 25-41-51-15H FOR DET		001
-110B	D2549020706674		. . WASHBASIN UNIT NP used on 001B, 001C SEE 25-41-51-15D FOR DET		001
-110C	D2549030605874		. . WASHBASIN UNIT NP used on 001D SEE 25-41-51-15J FOR DET		001
-110D	D2549030514674		. . WASHBASIN UNIT NP used on 001E, 001H, 001L, 001N SEE 25-41-51-15G FOR DET		001
-110E	D2549020704674		. . WASHBASIN UNIT NP used on 001F SEE 25-41-51-15G FOR DET		001

- ITEM NOT ILLUSTRATED

FIG. ITEM	PART NUMBER	AIRLINE STOCK NUMBER	NOMENCLATURE 1234567		EFF CODE	UNITS PER ASSY
-110F	D2549020700674		. . WASHBASIN UNIT used on 001G SEE 25-41-51-15G FOR DET	NP		001
-110G	D2549020613674		. . WASHBASIN UNIT used on 001J, 001P SEE 25-41-51-15F FOR DET	NP		001
-110H	D2549030513874		. . WASHBASIN UNIT used on 001K SEE 25-41-51-15F FOR DET	NP		001
-110J	D2549020710274		. . WASHBASIN UNIT used on 001M SEE 25-41-51-15H FOR DET	NP		001
120A	D2549020607075		. . DOOR ASSY-WASHBASIN UNIT used on 001A, 001G, 001H, 001M SEE 25-41-51-16B FOR DET	NP		001
-120B	D2549020607675		. . DOOR ASSY-WASHBASIN UNIT used on 001B, 001C, 001E SEE 25-41-51-16C FOR DET	NP		001
-120C	D2549030506275		. . DOOR ASSY-WASHBASIN UNIT used on 001D SEE 25-41-51-16C FOR DET	NP		001
-120D	D2549030506075		. . DOOR ASSY-WASHBASIN UNIT used on 001F SEE 25-41-51-16B FOR DET	NP		001
-120E	D2549030505475		. . DOOR ASSY-WASHBASIN UNIT used on 001J, 001K, 001P SEE 25-41-51-16B FOR DET	NP		001

- ITEM NOT ILLUSTRATED

FIG. ITEM	PART NUMBER	AIRLINE STOCK NUMBER	NOMENCLATURE 1234567	EFF CODE	UNITS PER ASSY
-120F	D2549010509475		. . DOOR ASSY-WASHBASIN UNIT NP used on 001L, 001N SEE 25-41-51-16B FOR DET		001
130A	D2549030504876		. . PANEL ASSY-WASHBASIN UNIT NP used on 001A, 001G, 001H, 001M SEE 25-41-51-17C FOR DET		001
-130B	D2549020607676		. . PANEL ASSY-WASHBASIN UNIT NP used on 001B, 001C, 001E SEE 25-41-51-17C FOR DET		001
-130C	D2549030506276		. . PANEL ASSY-WASHBASIN UNIT NP used on 001D SEE 25-41-51-17C FOR DET		001
-130D	D2549030506076		. . PANEL ASSY-WASHBASIN UNIT NP used on 001F SEE 25-41-51-17C FOR DET		001
-130E	D2549020506276		. . PANEL ASSY-WASHBASIN UNIT NP used on 001J, 001K, 001P SEE 25-41-51-17C FOR DET		001
-130F	D2549010509476		. . PANEL ASSY-WASHBASIN UNIT NP used on 001L, 001N SEE 25-41-51-17C FOR DET		001
140A	D2549030504877		. . BIN-WASTE,CHUTE-WASTE AND EXTINGUISHER-FIRE NP used on 001A, 001B, 001C, 001D, 001E, 001F, 001G, 001H, 001J, 001L, 001M, 001N, 001P SEE 25-41-51-180 FOR DET		001

- ITEM NOT ILLUSTRATED

FIG. ITEM	PART NUMBER	AIRLINE STOCK NUMBER	NOMENCLATURE 1234567		EFF CODE	UNITS PER ASSY
-140B	D2549020506277		. . BIN-WASTE,CHUTE-WASTE AND EXTINGUISHER-FIRE used on 001K SEE 25-41-51-180 FOR DET	NP		001
150A	D2549030504078		. . CABINET-SERVICE used on 001A, 001L, 001N SEE 25-41-51-19E FOR DET	NP		001
-150B	D2549030504878		. . CABINET-SERVICE used on 001B, 001C, 001D, 001E, 001G, 001M SEE 25-41-51-19E FOR DET	NP		001
-150C	D2549030506078		. . CABINET-SERVICE used on 001F SEE 25-41-51-19E FOR DET	NP		001
-150D	D2549010513878		. . CABINET-SERVICE used on 001H SEE 25-41-51-19F FOR DET	NP		001
-150E	D2549020605678		. . CABINET-SERVICE used on 001J, 001P SEE 25-41-51-19E FOR DET	NP		001
-150F	D2549030505478		. . CABINET-SERVICE used on 001K SEE 25-41-51-19E FOR DET	NP		001
160A	D2549010510679		. . TABLE-NURSING used on 001A, 001B, 001C, 001D, 001E, 001G, 001M SEE 25-41-51-20A FOR DET	NP		001
-160B	D2549030508479		. . TABLE-NURSING used on 001F SEE 25-41-51-20A FOR DET	NP		001

- ITEM NOT ILLUSTRATED

FIG. ITEM	PART NUMBER	AIRLINE STOCK NUMBER	NOMENCLATURE 1234567		EFF CODE	UNITS PER ASSY
-160C	D2549010600279		. . TABLE-NURSING used on 001H SEE 25-41-51-20A FOR DET	NP		001
-160D	D2549020613679		. . TABLE-NURSING used on 001J, 001K, 001P SEE 25-41-51-20A FOR DET	NP		001
-160E	D2549010512679		. . TABLE-NURSING used on 001L, 001N SEE 25-41-51-20A FOR DET	NP		001
170A	D2549010514280		. . VENTILATION SYSTEM used on 001A, 001B, 001C, 001D, 001E, 001G, 001L, 001M, 001N SEE 25-41-51-21A FOR DET	NP		001
-170B	D2549030508480		. . VENTILATION SYSTEM used on 001F SEE 25-41-51-21A FOR DET	NP		001
-170C	D2549030507680		. . VENTILATION SYSTEM used on 001H SEE 25-41-51-21A FOR DET	NP		001
-170D	D2549020507080		. . VENTILATION SYSTEM used on 001J, 001K, 001P SEE 25-41-51-21A FOR DET	NP		001
180A	D2549030504881		. . WATER SYSTEM-POTABLE used on 001A, 001B, 001C, 001D, 001E, 001G, 001H, 001L, 001M, 001N SEE 25-41-51-22D FOR DET	NP		001
-180B	D2549030504081		. . WATER SYSTEM-POTABLE used on 001F, 001J, 001P SEE 25-41-51-22G FOR DET	NP		001

- ITEM NOT ILLUSTRATED

FIG. ITEM	PART NUMBER	AIRLINE STOCK NUMBER	NOMENCLATURE 1234567		EFF CODE	UNITS PER ASSY
-180C	D2549020506281		. . WATER SYSTEM-POTABLE used on 001K SEE 25-41-51-22E FOR DET	NP		001
190A	D2549010511082		. . WATER SYSTEM-WASTE used on 001A, 001B, 001C, 001E, 001G, 001H, 001K, 001L, 001M, 001N SEE 25-41-51-23B FOR DET	NP		001
-190B	D2549030504882		. . WATER SYSTEM-WASTE used on 001D SEE 25-41-51-23B FOR DET	NP		001
-190C	D2549030506082		. . WATER SYSTEM-WASTE used on 001F, 001J, 001P SEE 25-41-51-23B FOR DET	NP		001
200A	D2549010603883		. . ELECTRICAL SYSTEM used on 001A, 001B, 001D SEE 25-41-51-26E FOR DET	NP		001
-200B	D2549030605283		. . ELECTRICAL SYSTEM used on 001C, 001E, 001F, 001H, 001K, 001L, 001M, 001N SEE 25-41-51-26F FOR DET	NP		001
-200C	D2549030602483		. . ELECTRICAL SYSTEM used on 001G SEE 25-41-51-26G FOR DET	NP		001
-200D	D2549030602883		. . ELECTRICAL SYSTEM used on 001J, 001P SEE 25-41-51-26F FOR DET	NP		001

- ITEM NOT ILLUSTRATED

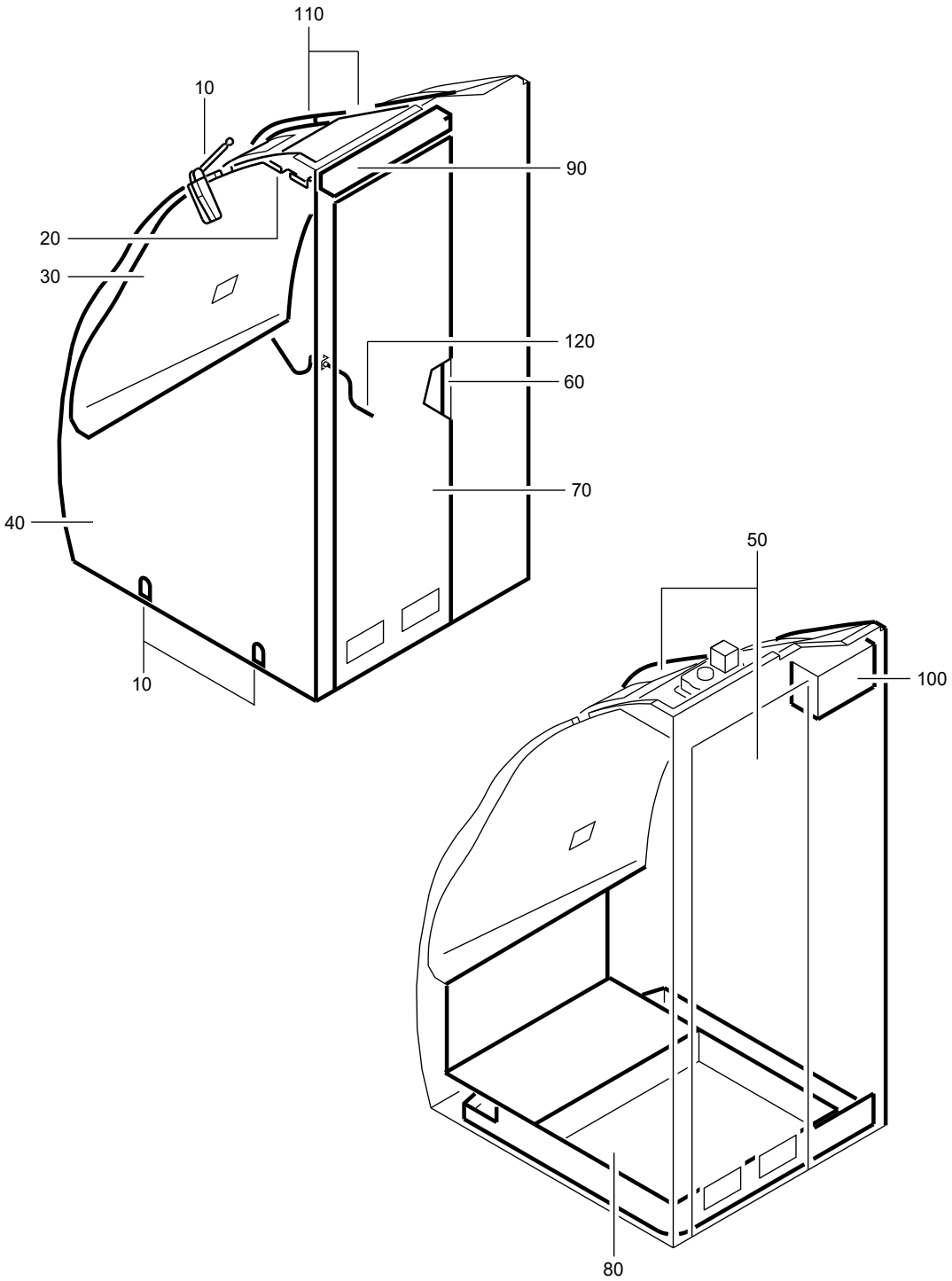

F_PL_254151_41_E_01_00

LAVATORY A ASSY
Figure 41E/EN254151SHEET41E01

FIG. ITEM	PART NUMBER	AIRLINE STOCK NUMBER	NOMENCLATURE 1234567		EFF CODE	UNITS PER ASSY
41E						
-001A	D2549020712000		. LAVATORY A ASSY SEE SIL 25-117 FOR DET			RF
-001B	D2549020712600		. LAVATORY A ASSY SEE SIL 25-117 FOR DET			RF
010A	D2549030514861		. . ATTACHMENT-LAVATORY used on 001A, 001B SEE 25-41-51-02A FOR DET	NP		001
020A	D2549020602663		. . PANEL-CEILING used on 001A, 001B SEE 25-41-51-040 FOR DET	NP		001
030A	D2549020712064		. . WALL-REAR used on 001A, 001B SEE 25-41-51-05E FOR DET	NP		001
040A	D2549020712065		. . WALL-SIDE used on 001A, 001B SEE 25-41-51-06S FOR DET	NP		001
050A	D2549020712066		. . HOUSING used on 001A, 001B SEE 25-41-51-07H FOR DET	NP		001
060A	D2549020712069		. . DOOR INSTL used on 001A, 001B SEE 25-41-51-100 FOR DET	NP		001
070A	A225400278-504		. . DOOR ASSY-SINGLE used on 001A, 001B SEE 25-41-51-11H FOR DET			001
080A	D2549020712072		. . PAN-FLOOR used on 001A, 001B SEE 25-41-51-13F FOR DET	NP		001

- ITEM NOT ILLUSTRATED

FIG. ITEM	PART NUMBER	AIRLINE STOCK NUMBER	NOMENCLATURE 1234567		EFF CODE	UNITS PER ASSY
090A	D2549010512673		. . LIGHT-DOOR used on 001A, 001B SEE 25-41-51-140 FOR DET	NP		001
100A	D2549020712078		. . CABINET-SERVICE used on 001A, 001B SEE 25-41-51-19G FOR DET	NP		001
110A	D2549010514280		. . VENTILATION SYSTEM used on 001A, 001B SEE 25-41-51-21A FOR DET	NP		001
120A	D2549020712083		. . ELECTRICAL SYSTEM used on 001A SEE 25-41-51-26H FOR DET	NP		001
-120B	D2549020712683		. . ELECTRICAL SYSTEM used on 001B SEE 25-41-51-26L FOR DET	NP		001

- ITEM NOT ILLUSTRATED

THIS PAGE IS INTENTIONALLY LEFT BLANK

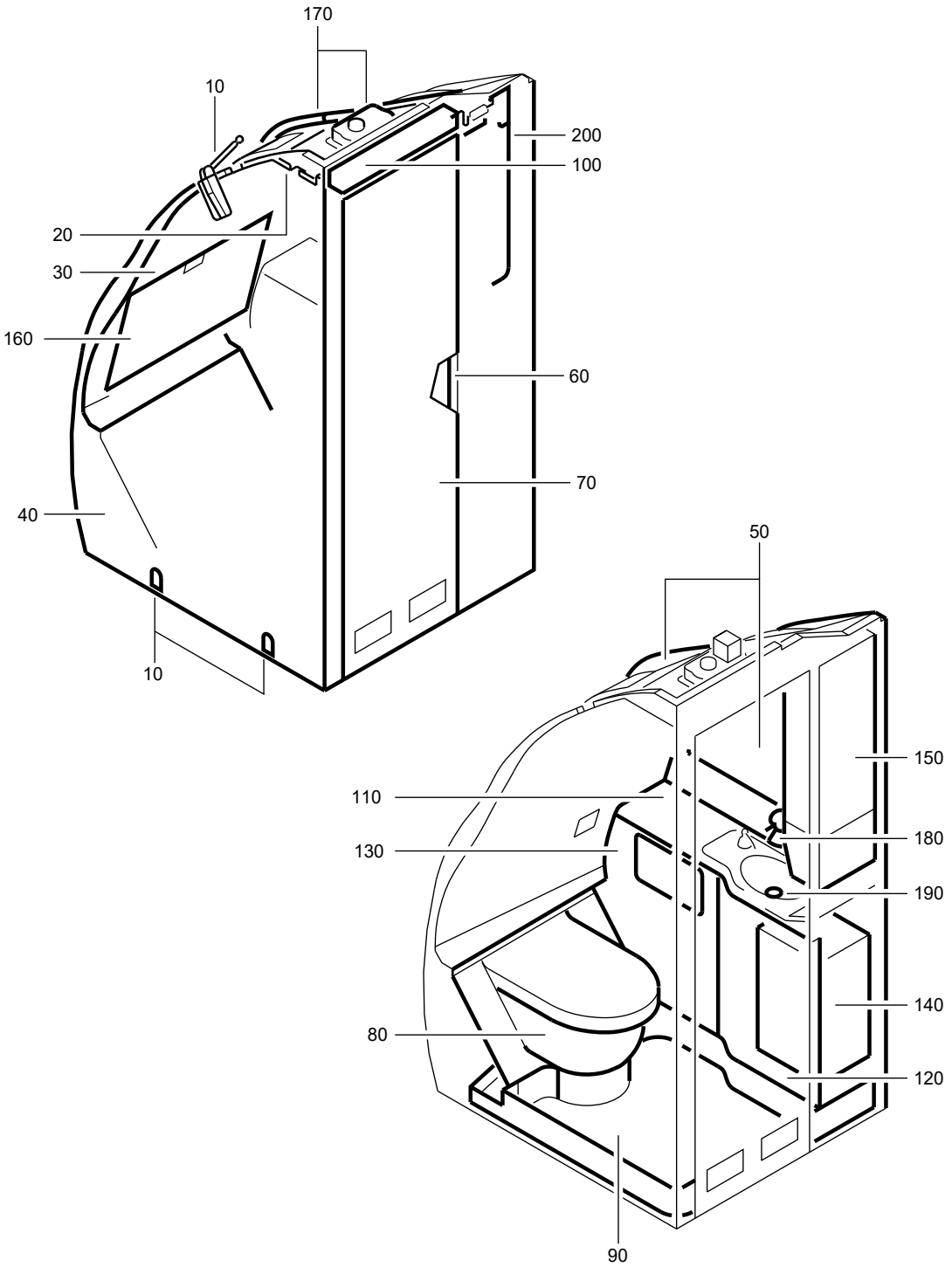

F_PL_254151_41_F_01_00

LAVATORY A ASSY
Figure 41F/EN254151SHEET41F01

FIG. ITEM	PART NUMBER	AIRLINE STOCK NUMBER	NOMENCLATURE 1234567	EFF CODE	UNITS PER ASSY
41F					
-001A	D2549030601600		. LAVATORY A ASSY PRE VSB A2-254-25-100 SEE SIL 25-117 FOR DET PRE VSB A2-254-25-054		RF
-001B	D2549020709400		. LAVATORY A ASSY SEE SIL 25-117 FOR DET		RF
-001C	D2549020713400		. LAVATORY A ASSY SEE SIL 25-117 FOR DET		RF
-001D	D2549020708400		. LAVATORY A ASSY POST SB 25-1640 SEE SIL 25-117 FOR DET		RF
-001E	D2549020708800		. LAVATORY A ASSY SEE SIL 25-117 FOR DET		RF
-001F	D2549020708200		. LAVATORY A ASSY SEE SIL 25-117 FOR DET		RF
-001G	D2549020708600		. LAVATORY A ASSY SEE SIL 25-117 FOR DET		RF
-001H	D2549020709200		. LAVATORY A ASSY SEE SIL 25-117 FOR DET		RF
-001J	D2549020709800		. LAVATORY A ASSY PRE VSB A2-254-25-042 SEE SIL 25-117 FOR DET		RF
-001K	D2549020710600		. LAVATORY A ASSY SEE SIL 25-117 FOR DET		RF
-001L	D2549010606000		. LAVATORY A ASSY SEE SIL 25-117 FOR DET		RF
-001M	D2549010605800		. LAVATORY A ASSY SEE SIL 25-117 FOR DET		RF

- ITEM NOT ILLUSTRATED

FIG. ITEM	PART NUMBER	AIRLINE STOCK NUMBER	NOMENCLATURE 1234567		EFF CODE	UNITS PER ASSY
-001N	D2549010606000		. LAVATORY A ASSY POST SB 25-1312 SEE SIL 25-117 FOR DET			RF
-001P	D2549020708200		. LAVATORY A ASSY SEE SIL 25-117 FOR DET			RF
-001Q	D2549010606000		. LAVATORY A ASSY SEE SIL 25-117 FOR DET			RF
-001R	D2549020709200		. LAVATORY A ASSY SEE SIL 25-117 FOR DET			RF
-001S	R225401152-004		. LAVATORY A ASSY POST VSB A2-254-25-042 SEE SIL 25-117 FOR DET			RF
-001T	R225401168-014		. LAVATORY A ASSY SEE SIL 25-117 FOR DET POST VSB A2-254-25-054			RF
-001U	R225401168-028		. LAVATORY A ASSY POST VSB A2-254-25-100			RF
010A	D2549020512461		. . ATTACHMENT-LAVATORY used on 001A, 001T, 001U SEE 25-41-51-02C FOR DET	NP		001
-010B	D2549020709461		. . ATTACHMENT-LAVATORY used on 001B SEE 25-41-51-02B FOR DET	NP		001
-010C	D2549030514861		. . ATTACHMENT-LAVATORY used on 001C, 001E, 001F, 001G, 001J, 001K, 001L, 001M, 001P, 001Q, 001S SEE 25-41-51-02A FOR DET	NP		001

- ITEM NOT ILLUSTRATED

FIG. ITEM	PART NUMBER	AIRLINE STOCK NUMBER	NOMENCLATURE 1234567	EFF CODE	UNITS PER ASSY
-010D	D2549020705861		. . ATTACHMENT-LAVATORY NP POST SB 25-1312 used on 001H, 001N, 001R SEE 25-41-51-02D FOR DET		001
-010E	D2547160007061		. . ATTACHMENT-LAVATORY NP POST SB 25-1640 used on 001D SEE 25-41-51-02D FOR DET		001
020A	D2549030507263		. . PANEL-CEILING NP used on 001A, 001T, 001U SEE 25-41-51-040 FOR DET		001
-020B	D2549010513863		. . PANEL-CEILING NP used on 001B SEE 25-41-51-040 FOR DET		001
-020C	D2549020602663		. . PANEL-CEILING NP used on 001C, 001E, 001F, 001G, 001H, 001J, 001K, 001L, 001M, 001N, 001P, 001Q, 001R, 001S SEE 25-41-51-040 FOR DET		001
-020D	D2549030401463		. . PANEL-CEILING NP POST SB 25-1640 used on 001D SEE 25-41-51-040 FOR DET		001
030A	D2549030601664		. . WALL-REAR NP used on 001A, 001T, 001U SEE 25-41-51-05C FOR DET		001
-030B	D2549010600264		. . WALL-REAR NP used on 001B SEE 25-41-51-05D FOR DET		001

- ITEM NOT ILLUSTRATED

FIG. ITEM	PART NUMBER	AIRLINE STOCK NUMBER	NOMENCLATURE 1234567	EFF CODE	UNITS PER ASSY
-030C	D2549010512664		. . WALL-REAR NP used on 001C, 001D, 001E, 001F, 001G, 001J, 001K, 001M, 001P, 001S SEE 25-41-51-05B FOR DET		001
-030D	D2549020614864		. . WALL-REAR NP used on 001H, 001L, 001N, 001Q, 001R SEE 25-41-51-05D FOR DET		001
040A	D2549030510265		. . WALL-SIDE NP PRE VSB A2-254-25-054 used on 001A, 001U SEE 25-41-51-06N FOR DET		001
-040B	D2549020702065		. . WALL-SIDE NP used on 001B SEE 25-41-51-06H FOR DET		001
-040C	D2549020713465		. . WALL-SIDE NP used on 001C SEE 25-41-51-06Q FOR DET		001
-040D	D2549020708465		. . WALL-SIDE NP used on 001D SEE 25-41-51-06Q FOR DET		001
-040E	D2549020708865		. . WALL-SIDE NP used on 001E SEE 25-41-51-06Q FOR DET		001
-040F	D2549010600665		. . WALL-SIDE NP used on 001F, 001P SEE 25-41-51-06M FOR DET		001
-040G	D2549020707265		. . WALL-SIDE NP used on 001G SEE 25-41-51-06Q FOR DET		001

- ITEM NOT ILLUSTRATED

FIG. ITEM	PART NUMBER	AIRLINE STOCK NUMBER	NOMENCLATURE 1234567		EFF CODE	UNITS PER ASSY
-040H	D2549030509065		. . WALL-SIDE used on 001L, 001Q SEE 25-41-51-06K FOR DET	NP		001
-040J	D2549020703465		. . WALL-SIDE PRE VSB A2-254-25-042 used on 001J SEE 25-41-51-06P FOR DET	NP		001
-040K	D2549030511265		. . WALL-SIDE used on 001K SEE 25-41-51-06N FOR DET	NP		001
-040L	D2549020700465		. . WALL-SIDE used on 001M SEE 25-41-51-06N FOR DET	NP		001
-040M	D2549020614865		. . WALL-SIDE used on 001H, 001N, 001R SEE 25-41-51-06K FOR DET	NP		001
-040N	R22540115200065		. . WALL-SIDE POST VSB A2-254-25-042 used on 001S SEE 25-41-51-06P FOR DET	NP		001
-040P	R22540116800465		. . WALL-SIDE POST VSB A2-254-25-054 used on 001T SEE 25-41-51-06N FOR DET	NP		001
050A	D2549030507266		. . HOUSING used on 001A, 001T, 001U SEE 25-41-51-07E FOR DET	NP		001
-050B	D2549010513866		. . HOUSING used on 001B SEE 25-41-51-07E FOR DET	NP		001

- ITEM NOT ILLUSTRATED

FIG. ITEM	PART NUMBER	AIRLINE STOCK NUMBER	NOMENCLATURE 1234567	EFF CODE	UNITS PER ASSY
-050C	D2549020607066		. . HOUSING NP used on 001C, 001H, 001R SEE 25-41-51-07Y FOR DET		001
-050D	D2547160007066		. . HOUSING NP POST SB 25-1640 used on 001D SEE 25-41-51-07E FOR DET		001
-050E	D2549010511066		. . HOUSING NP used on 001F, 001P SEE 25-41-51-07B FOR DET		001
-050F	D2549020707266		. . HOUSING NP used on 001G SEE 25-41-51-07G FOR DET		001
-050G	D2549020703466		. . HOUSING NP used on 001J, 001S SEE 25-41-51-07G FOR DET		001
-050H	D2549030511266		. . HOUSING NP used on 001K SEE 25-41-51-07G FOR DET		001
-050J	D2549010606066		. . HOUSING NP used on 001L, 001M, 001N, 001Q SEE 25-41-51-07G FOR DET		001
-050K	D2549020708866		. . HOUSING NP used on 001E SEE 25-41-51-49B FOR DET		001
060A	D2549010500069		. . DOOR INSTL NP used on 001A, 001B, 001C, 001D, 001F, 001G, 001H, 001J, 001K, 001L, 001M, 001N, 001P, 001Q, 001R, 001S, 001T, 001U SEE 25-41-51-100 FOR DET		001

- ITEM NOT ILLUSTRATED

FIG. ITEM	PART NUMBER	AIRLINE STOCK NUMBER	NOMENCLATURE 1234567	EFF CODE	UNITS PER ASSY
-060B	D2549020401269		. . DOOR INSTL NP used on 001E SEE 25-41-51-10A FOR DET		001
070A	A225400276-932		. . DOOR ASSY-SINGLE used on 001A, 001T, 001U SEE 25-41-51-11D FOR DET		001
-070B	A225400276-574		. . DOOR ASSY-SINGLE used on 001B, 001K SEE 25-41-51-11E FOR DET		001
-070C	A225400276-956		. . DOOR ASSY-SINGLE used on 001C SEE 25-41-51-11G FOR DET		001
-070D	A225400276-598		. . DOOR ASSY-SINGLE used on 001D SEE 25-41-51-11G FOR DET		001
-070E	A225400276-942		. . DOOR ASSY-SINGLE used on 001M SEE 25-41-51-11F FOR DET		001
-070F	A225400276-584		. . DOOR ASSY-SINGLE used on 001F, 001G, 001P SEE 25-41-51-11F FOR DET		001
-070G	A225400276-592		. . DOOR ASSY-SINGLE used on 001H, 001R SEE 25-41-51-11E FOR DET		001
-070H	A225400276-946		. . DOOR ASSY-SINGLE used on 001J, 001S SEE 25-41-51-11G FOR DET		001
-070J	A225400278-506		. . DOOR ASSY-SINGLE used on 001L, 001N, 001Q SEE 25-41-51-11H FOR DET		001

- ITEM NOT ILLUSTRATED

FIG. ITEM	PART NUMBER	AIRLINE STOCK NUMBER	NOMENCLATURE 1234567		EFF CODE	UNITS PER ASSY
-070K	A2254002768942		. . DOOR ASSY-SINGLE used on 001E, 001M SEE 25-41-51-11F FOR DET			001
080A	D2549030507271		. . TOILET UNIT AND TOILET SHROUD used on 001A, 001T, 001U SEE 25-41-51-12D FOR DET	NP		001
-080B	D2549020604271		. . TOILET UNIT AND TOILET SHROUD used on 001B, 001C, 001D, 001F, 001G, 001H, 001J, 001K, 001L, 001N, 001P, 001Q, 001R, 001S SEE 25-41-51-12C FOR DET	NP		001
-080C	D2549020607671		. . TOILET UNIT AND TOILET SHROUD used on 001E, 001M SEE 25-41-51-12C FOR DET	NP		001
090A	D2549020512472		. . PAN-FLOOR used on 001A, 001T, 001U SEE 25-41-51-13H FOR DET	NP		001
-090B	D2549030603072		. . PAN-FLOOR used on 001B SEE 25-41-51-13E FOR DET	NP		001
-090C	D2549020713472		. . PAN-FLOOR used on 001C SEE 25-41-51-13E FOR DET	NP		001
-090D	D2549030504672		. . PAN-FLOOR used on 001D SEE 25-41-51-13B FOR DET	NP		001
-090E	D2549020604872		. . PAN-FLOOR used on 001F, 001M, 001P SEE 25-41-51-13C FOR DET	NP		001

- ITEM NOT ILLUSTRATED

FIG. ITEM	PART NUMBER	AIRLINE STOCK NUMBER	NOMENCLATURE 1234567		EFF CODE	UNITS PER ASSY
-090F	D2549030504072		. . PAN-FLOOR used on 001G SEE 25-41-51-13B FOR DET	NP		001
-090G	D2549010510272		. . PAN-FLOOR used on 001H SEE 25-41-51-13B FOR DET	NP		001
-090H	D2549020704272		. . PAN-FLOOR used on 001J, 001S SEE 25-41-51-13D FOR DET	NP		001
-090J	D2549030511272		. . PAN-FLOOR used on 001K SEE 25-41-51-13D FOR DET	NP		001
-090K	D2549020606072		. . PAN-FLOOR used on 001L, 001N SEE 25-41-51-13C FOR DET	NP		001
-090L	D2549010514272		. . PAN-FLOOR used on 001E SEE 25-41-51-13T FOR DET	NP		001
-090M	D2549010606072		. . PAN-FLOOR POST SB 25-1289 used on 001Q SEE 25-41-51-13V FOR DET	NP		001
-090N	D2549020508472		. . PAN-FLOOR POST SB 25-1289 used on 001R SEE 25-41-51-13V FOR DET	NP		001
100A	D2549030508673		. . LIGHT-DOOR used on 001A, 001T, 001U SEE 25-41-51-14A FOR DET	NP		001
-100B	D2549010600273		. . LIGHT-DOOR used on 001B SEE 25-41-51-14A FOR DET	NP		001

- ITEM NOT ILLUSTRATED

FIG. ITEM	PART NUMBER	AIRLINE STOCK NUMBER	NOMENCLATURE 1234567	EFF CODE	UNITS PER ASSY
-100C	D2549010512673		. . LIGHT-DOOR NP used on 001C, 001E, 001F, 001G, 001H, 001J, 001K, 001L, 001M, 001N, 001P, 001Q, 001R, 001S SEE 25-41-51-140 FOR DET		001
-100D	D2547160007473		. . LIGHT-DOOR NP POST SB 25-1640 used on 001D SEE 25-41-51-14A FOR DET		001
110A	D2549030600874		. . WASHBASIN UNIT NP used on 001A, 001T, 001U SEE 25-41-51-15G FOR DET		001
-110B	D2549030514674		. . WASHBASIN UNIT NP used on 001B, 001C, 001E, 001F, 001G, 001J, 001P, 001S SEE 25-41-51-15G FOR DET		001
-110C	D2549020605874		. . WASHBASIN UNIT NP used on 001D SEE 25-41-51-15C FOR DET		001
-110D	D2549020705674		. . WASHBASIN UNIT NP used on 001H, 001L, 001N, 001Q, 001R SEE 25-41-51-15H FOR DET		001
-110E	D2549020710674		. . WASHBASIN UNIT NP used on 001K SEE 25-41-51-15H FOR DET		001
-110F	D2549020706274		. . WASHBASIN UNIT NP used on 001M SEE 25-41-51-15C FOR DET		001
120A	D2549030507275		. . DOOR ASSY-WASHBASIN UNIT NP used on 001A, 001T, 001U SEE 25-41-51-16C FOR DET		001

- ITEM NOT ILLUSTRATED

FIG. ITEM	PART NUMBER	AIRLINE STOCK NUMBER	NOMENCLATURE 1234567	EFF CODE	UNITS PER ASSY
-120B	D2549020607075		. . DOOR ASSY-WASHBASIN UNIT NP used on 001B, 001C, 001D, 001F, 001G, 001H, 001J, 001K, 001L, 001N, 001P, 001Q, 001R, 001S SEE 25-41-51-16B FOR DET		001
-120C	D2549020607675		. . DOOR ASSY-WASHBASIN UNIT NP used on 001E, 001M SEE 25-41-51-16C FOR DET		001
130A	D2549030507276		. . PANEL ASSY-WASHBASIN UNIT NP used on 001A, 001T, 001U SEE 25-41-51-17D FOR DET		001
-130B	D2549030504876		. . PANEL ASSY-WASHBASIN UNIT NP used on 001B, 001C, 001D, 001G, 001H, 001J, 001K, 001L, 001N, 001Q, 001R, 001S SEE 25-41-51-17C FOR DET		001
-130C	D2549020607676		. . PANEL ASSY-WASHBASIN UNIT NP used on 001E, 001M SEE 25-41-51-17C FOR DET		001
-130D	D2549010510876		. . PANEL ASSY-WASHBASIN UNIT NP used on 001F, 001P SEE 25-41-51-17C FOR DET		001

- ITEM NOT ILLUSTRATED

FIG. ITEM	PART NUMBER	AIRLINE STOCK NUMBER	NOMENCLATURE 1234567	EFF CODE	UNITS PER ASSY
140A	D2549030504877		. . BIN-WASTE,CHUTE-WASTE AND EXTINGUISHER-FIRE NP used on 001A, 001B, 001C, 001D, 001E, 001F, 001G, 001H, 001J, 001K, 001L, 001M, 001N, 001P, 001Q, 001R, 001S, 001T, 001U SEE 25-41-51-180 FOR DET		001
150A	D2549030507278		. . CABINET-SERVICE NP PRE VSB A2-254-25-054 used on 001A, 001U SEE 25-41-51-19F FOR DET		001
-150B	D2549010513878		. . CABINET-SERVICE NP used on 001B SEE 25-41-51-19F FOR DET		001
-150C	D2549030504878		. . CABINET-SERVICE NP PRE VSB A2-254-25-042 used on 001C, 001E, 001F, 001G, 001H, 001J, 001K, 001M, 001P, 001R SEE 25-41-51-19E FOR DET		001
-150D	D2549020605878		. . CABINET-SERVICE NP used on 001D, 001L, 001Q SEE 25-41-51-19F FOR DET		001
-150F	D2549010511878		. . CABINET-SERVICE NP used on 001N SEE 25-41-51-19F FOR DET		001
-150G	R22540114200078		. . CABINET-SERVICE NP POST VSB A2-254-25-042 used on 001S SEE 25-41-51-19E FOR DET		001

- ITEM NOT ILLUSTRATED

FIG. ITEM	PART NUMBER	AIRLINE STOCK NUMBER	NOMENCLATURE 1234567		EFF CODE	UNITS PER ASSY
-150H	R22540116800478		. . CABINET-SERVICE POST VSB A2-254-25-054 used on 001T SEE 25-41-51-19F FOR DET	NP		001
160A	D2549030508679		. . TABLE-NURSING used on 001A, 001T, 001U SEE 25-41-51-20A FOR DET	NP		001
-160B	D2549010600279		. . TABLE-NURSING used on 001B SEE 25-41-51-20A FOR DET	NP		001
-160C	D2549010510679		. . TABLE-NURSING used on 001C, 001D, 001E, 001G, 001M SEE 25-41-51-20A FOR DET	NP		001
-160D	D2549010512679		. . TABLE-NURSING used on 001F, 001H, 001J, 001K, 001L, 001N, 001P, 001Q, 001R, 001S SEE 25-41-51-20A FOR DET	NP		001
170A	D2549030508680		. . VENTILATION SYSTEM used on 001A, 001T, 001U SEE 25-41-51-21A FOR DET	NP		001
-170B	D2549030507680		. . VENTILATION SYSTEM used on 001B SEE 25-41-51-21A FOR DET	NP		001
-170C	D2549010514280		. . VENTILATION SYSTEM used on 001C, 001E, 001F, 001G, 001H, 001J, 001K, 001L, 001M, 001N, 001P, 001Q, 001R, 001S SEE 25-41-51-21A FOR DET	NP		001
-170D	D2549030504880		. . VENTILATION SYSTEM used on 001D SEE 25-41-51-210 FOR DET	NP		001

- ITEM NOT ILLUSTRATED

FIG. ITEM	PART NUMBER	AIRLINE STOCK NUMBER	NOMENCLATURE 1234567	EFF CODE	UNITS PER ASSY
180A	D2549030504881		. . WATER SYSTEM-POTABLE NP used on 001A, 001B, 001C, 001D, 001E, 001F, 001G, 001H, 001J, 001P, 001R, 001S, 001T, 001U SEE 25-41-51-22D FOR DET		001
-180B	D2549010606081		. . WATER SYSTEM-POTABLE NP used on 001K, 001L, 001M, 001N, 001Q SEE 25-41-51-22D FOR DET		001
190A	D2549010511082		. . WATER SYSTEM-WASTE NP used on 001A, 001B, 001C, 001E, 001F, 001G, 001J, 001M, 001P, 001S, 001T, 001U SEE 25-41-51-23B FOR DET		001
-190B	D2549030504882		. . WATER SYSTEM-WASTE NP used on 001D, 001H, 001K, 001L, 001N, 001Q, 001R SEE 25-41-51-23B FOR DET		001
200A	D2549030605283		. . ELECTRICAL SYSTEM NP used on 001A, 001B, 001C, 001E, 001F, 001G, 001H, 001J, 001R, 001S, 001T, 001U SEE 25-41-51-26F FOR DET		001
-200B	D2549020710683		. . ELECTRICAL SYSTEM NP used on 001K, 001L, 001M, 001N, 001Q SEE 25-41-51-26K FOR DET		001
-200C	D2549030413083		. . ELECTRICAL SYSTEM NP POST SB 26-1058 used on 001P SEE 25-41-51-26F FOR DET		001

- ITEM NOT ILLUSTRATED

FIG. ITEM	PART NUMBER	AIRLINE STOCK NUMBER	NOMENCLATURE 1234567		EFF CODE	UNITS PER ASSY
-200D	F2547160007483		. . ELECTRICAL SYSTEM POST SB 25-1640 used on 001D SEE 25-41-51-26Q FOR DET	NP		001

- ITEM NOT ILLUSTRATED

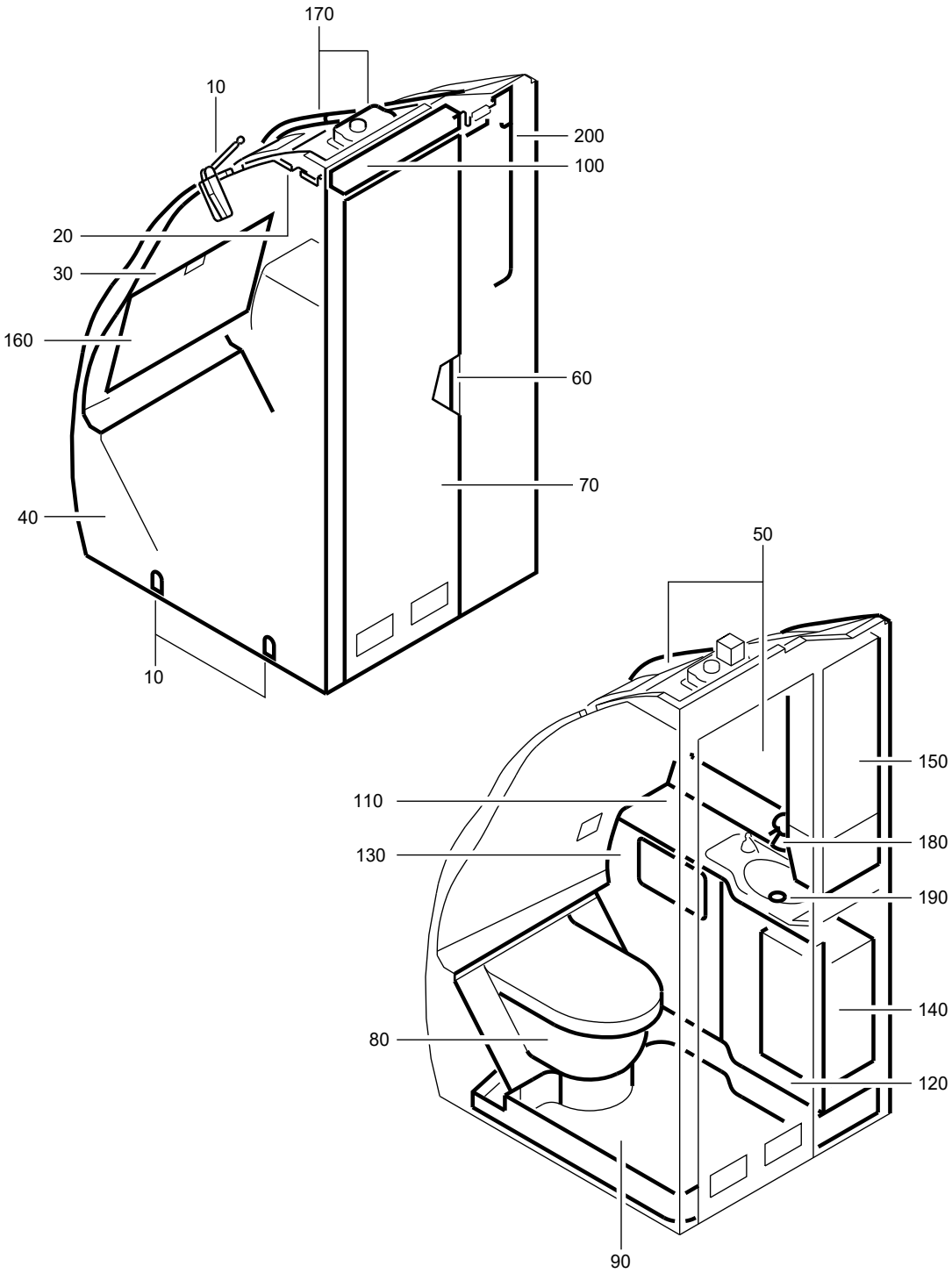

F_PL_254151_41_G_01_00

LAVATORY A ASSY
Figure 41G/EN254151SHEET41G01

FIG. ITEM	PART NUMBER	AIRLINE STOCK NUMBER	NOMENCLATURE 1234567	EFF CODE	UNITS PER ASSY
41G					
-001A	D2549030604200		. LAVATORY A ASSY SEE SIL 25-117 FOR DET		RF
-001B	D2549030608200		. LAVATORY A ASSY SEE SIL 25-117 FOR DET		RF
-001C	D2549030606200		. LAVATORY A ASSY PRE VSB A2-254-25-080 SEE SIL 25-117 FOR DET		RF
-001D	D2549030605400		. LAVATORY A ASSY SEE SIL 25-117 FOR DET		RF
-001E	D2549010605000		. LAVATORY A ASSY PRE VSB A2-254-25-080 SEE SIL 25-117 FOR DET		RF
-001F	D2549010606200		. LAVATORY A ASSY SEE SIL 25-117 FOR DET		RF
-001G	D2549030606400		. LAVATORY A ASSY SEE SIL 25-117 FOR DET		RF
-001H	D2549030607400		. LAVATORY A ASSY SEE SIL 25-117 FOR DET		RF
-001J	D2549030607000		. LAVATORY A ASSY PRE VSB A2-254-25-046 SEE SIL 25-117 FOR DET		RF
-001K	D2549020509200		. LAVATORY A ASSY SEE SIL 25-117 FOR DET		RF
-001L	D2549020708000		. LAVATORY A ASSY SEE SIL 25-117 FOR DET		RF
-001M	D2549030605600		. LAVATORY A ASSY SEE SIL 25-117 FOR DET		RF

- ITEM NOT ILLUSTRATED

FIG. ITEM	PART NUMBER	AIRLINE STOCK NUMBER	NOMENCLATURE 1234567	EFF CODE	UNITS PER ASSY
-001N	D2549010606200		. LAVATORY A ASSY SEE SIL 25-117 FOR DET		RF
-001P	D2549010606200		. LAVATORY A ASSY SEE SIL 25-117 FOR DET		RF
-001Q	D2549030605600		. LAVATORY A ASSY		RF
-001R	R225401145-004		. LAVATORY A ASSY POST VSB A2-254-25-080 SEE SIL 25-117 FOR DET		RF
-001S	R225401172-012		. LAVATORY A ASSY POST VSB A2-254-25-080 SEE SIL 25-117 FOR DET		RF
-001T	R225401134-024		. LAVATORY A ASSY POST VSB A2-254-25-046		RF
010A	D2549030604261		. . ATTACHMENT-LAVATORY NP used on 001A SEE 25-41-51-02B FOR DET		001
-010B	D2549030608261		. . ATTACHMENT-LAVATORY NP used on 001B SEE 25-41-51-02B FOR DET		001
-010C	D2549030514861		. . ATTACHMENT-LAVATORY NP used on 001C, 001E, 001F, 001K, 001M, 001N, 001P, 001Q, 001R, 001S SEE 25-41-51-02A FOR DET		001
-010D	D2549030607461		. . ATTACHMENT-LAVATORY NP used on 001H, 001J, 001T SEE 25-41-51-02B FOR DET		001
-010E	D2549020708061		. . ATTACHMENT-LAVATORY NP used on 001L SEE 25-41-51-02B FOR DET		001

- ITEM NOT ILLUSTRATED

FIG. ITEM	PART NUMBER	AIRLINE STOCK NUMBER	NOMENCLATURE 1234567	EFF CODE	UNITS PER ASSY
-010F	D2549020705861		. . ATTACHMENT-LAVATORY NP used on 001D, 001G SEE 25-41-51-02D FOR DET		001
020A	D2549030505663		. . PANEL-CEILING NP used on 001A SEE 25-41-51-040 FOR DET		001
-020B	D2549030506063		. . PANEL-CEILING NP used on 001B SEE 25-41-51-040 FOR DET		001
-020C	D2549020602663		. . PANEL-CEILING NP used on 001C, 001D, 001E, 001F, 001G, 001K, 001M, 001N, 001P, 001Q, 001R, 001S SEE 25-41-51-040 FOR DET		001
-020D	D2549020602863		. . PANEL-CEILING NP used on 001H, 001J, 001T SEE 25-41-51-040 FOR DET		001
-020E	D2549020610263		. . PANEL-CEILING NP used on 001L SEE 25-41-51-040 FOR DET		001
030A	D2549010514064		. . WALL-REAR NP used on 001A SEE 25-41-51-05B FOR DET		001
-030B	D2549030601464		. . WALL-REAR NP used on 001B SEE 25-41-51-05C FOR DET		001
-030C	D2549010512664		. . WALL-REAR NP used on 001C, 001D, 001F, 001G, 001K, 001M, 001N, 001P, 001Q, 001S SEE 25-41-51-05B FOR DET		001

- ITEM NOT ILLUSTRATED

FIG. ITEM	PART NUMBER	AIRLINE STOCK NUMBER	NOMENCLATURE 1234567		EFF CODE	UNITS PER ASSY
-030D	D2549010514464		. . WALL-REAR used on 001E, 001R SEE 25-41-51-05B FOR DET	NP		001
-030E	D2549030509464		. . WALL-REAR used on 001H SEE 25-41-51-05D FOR DET	NP		001
-030F	D2549020613664		. . WALL-REAR used on 001J, 001T SEE 25-41-51-05B FOR DET	NP		001
-030G	D2549020612264		. . WALL-REAR used on 001L SEE 25-41-51-05C FOR DET	NP		001
040A	D2549020702665		. . WALL-SIDE used on 001A SEE 25-41-51-06P FOR DET	NP		001
-040B	D2549030601465		. . WALL-SIDE used on 001B SEE 25-41-51-06Q FOR DET	NP		001
-040C	D2549030509865		. . WALL-SIDE PRE VSB A2-254-25-080 used on 001C SEE 25-41-51-06N FOR DET	NP		001
-040D	D2549020614465		. . WALL-SIDE used on 001D SEE 25-41-51-06L FOR DET	NP		001
-040E	D2549010514665		. . WALL-SIDE PRE VSB A2-254-25-080 used on 001E SEE 25-41-51-06N FOR DET	NP		001
-040F	D2549010606265		. . WALL-SIDE used on 001F, 001P SEE 25-41-51-06P FOR DET	NP		001

- ITEM NOT ILLUSTRATED

FIG. ITEM	PART NUMBER	AIRLINE STOCK NUMBER	NOMENCLATURE 1234567	EFF CODE	UNITS PER ASSY
-040G	D2549030602465		. . WALL-SIDE NP used on 001G SEE 25-41-51-06R FOR DET		001
-040H	D2549030513865		. . WALL-SIDE NP used on 001H SEE 25-41-51-06P FOR DET		001
-040J	D2549020613665		. . WALL-SIDE NP used on 001J, 001T SEE 25-41-51-06K FOR DET		001
-040K	D2549010600665		. . WALL-SIDE NP used on 001K SEE 25-41-51-06M FOR DET		001
-040L	D2549020612265		. . WALL-SIDE NP used on 001L SEE 25-41-51-06L FOR DET		001
-040M	D2549030514665		. . WALL-SIDE NP used on 001M, 001Q SEE 25-41-51-06P FOR DET		001
-040N	D2547160005665		. . WALL-SIDE NP POST SB 25-1574 used on 001N SEE 25-41-51-06P FOR DET		001
-040P	R22540114500265		. . WALL-SIDE NP POST VSB A2-254-25-080 used on 001R SEE 25-41-51-06N FOR DET		001
-040Q	R22540117200665		. . WALL-SIDE NP POST VSB A2-254-25-080 used on 001S SEE 25-41-51-06N FOR DET		001

- ITEM NOT ILLUSTRATED

FIG. ITEM	PART NUMBER	AIRLINE STOCK NUMBER	NOMENCLATURE 1234567	EFF CODE	UNITS PER ASSY
050A	D2549030604266		. . HOUSING NP used on 001A SEE 25-41-51-07G FOR DET		001
-050B	D2549030506066		. . HOUSING NP used on 001B SEE 25-41-51-07C FOR DET		001
-050C	D2549020607666		. . HOUSING NP used on 001C, 001E, 001R, 001S SEE 25-41-51-07D FOR DET		001
-050D	D2549030505866		. . HOUSING NP used on 001D SEE 25-41-51-07D FOR DET		001
-050E	D2549010513266		. . HOUSING NP used on 001F, 001P SEE 25-41-51-07E FOR DET		001
-050F	D2549030606466		. . HOUSING NP used on 001G SEE 25-41-51-07G FOR DET		001
-050G	D2549020506266		. . HOUSING NP used on 001H SEE 25-41-51-07D FOR DET		001
-050H	D2549020605666		. . HOUSING NP used on 001J, 001T SEE 25-41-51-07D FOR DET		001
-050J	D2549010511066		. . HOUSING NP used on 001K SEE 25-41-51-07B FOR DET		001
-050K	D2549020610266		. . HOUSING NP used on 001L SEE 25-41-51-07E FOR DET		001

- ITEM NOT ILLUSTRATED

FIG. ITEM	PART NUMBER	AIRLINE STOCK NUMBER	NOMENCLATURE 1234567		EFF CODE	UNITS PER ASSY
-050L	D2549030510666		. . HOUSING used on 001M, 001Q SEE 25-41-51-07F FOR DET	NP		001
-050M	D2547160005666		. . HOUSING POST SB 25-1574 used on 001N SEE 25-41-51-07B FOR DET	NP		001
060A	D2549010500069		. . DOOR INSTL used on 001A, 001C, 001D, 001E, 001F, 001G, 001H, 001J, 001K, 001L, 001M, 001N, 001P, 001Q, 001R, 001S, 001T SEE 25-41-51-100 FOR DET	NP		001
-060B	D2549020401269		. . DOOR INSTL POST SB 25-1314 used on 001B SEE 25-41-51-10A FOR DET	NP		001
070A	A225400278-508		. . DOOR ASSY-SINGLE used on 001A SEE 25-41-51-11H FOR DET			001
-070B	A2254002768930		. . DOOR ASSY-SINGLE POST SB 25-1314 used on 001B SEE 25-41-51-11N FOR DET			001
-070C	A225400276-934		. . DOOR ASSY-SINGLE used on 001C, 001S SEE 25-41-51-11F FOR DET			001
-070D	A225400276-588		. . DOOR ASSY-SINGLE used on 001D SEE 25-41-51-11F FOR DET			001
-070E	A225400276-592		. . DOOR ASSY-SINGLE used on 001E, 001R SEE 25-41-51-11E FOR DET			001

- ITEM NOT ILLUSTRATED

FIG. ITEM	PART NUMBER	AIRLINE STOCK NUMBER	NOMENCLATURE 1234567	EFF CODE	UNITS PER ASSY
-070F	A225400276-594		. . DOOR ASSY-SINGLE used on 001F, 001P SEE 25-41-51-11G FOR DET		001
-070G	A225400276-928		. . DOOR ASSY-SINGLE used on 001G SEE 25-41-51-11F FOR DET		001
-070H	A225400276-590		. . DOOR ASSY-SINGLE used on 001H SEE 25-41-51-11E FOR DET		001
-070J	A225400276-570		. . DOOR ASSY-SINGLE used on 001J, 001T SEE 25-41-51-11E FOR DET		001
-070K	A225400276-584		. . DOOR ASSY-SINGLE used on 001K SEE 25-41-51-11F FOR DET		001
-070L	A225400276-940		. . DOOR ASSY-SINGLE used on 001L SEE 25-41-51-11F FOR DET		001
-070M	A225400276-574		. . DOOR ASSY-SINGLE used on 001M, 001Q SEE 25-41-51-11E FOR DET		001
-070N	A225400278-574		. . DOOR ASSY-SINGLE POST SB 25-1574 used on 001N SEE 25-41-51-11H FOR DET		001
080A	D2549010510271		. . TOILET UNIT AND TOILET SHROUD NP used on 001A, 001F, 001N, 001P SEE 25-41-51-12C FOR DET		001

- ITEM NOT ILLUSTRATED

FIG. ITEM	PART NUMBER	AIRLINE STOCK NUMBER	NOMENCLATURE 1234567		EFF CODE	UNITS PER ASSY
-080B	D2549030506071		. . TOILET UNIT AND TOILET SHROUD used on 001B SEE 25-41-51-12C FOR DET	NP		001
-080C	D2549020604271		. . TOILET UNIT AND TOILET SHROUD used on 001C, 001D, 001E, 001K, 001M, 001Q, 001R, 001S SEE 25-41-51-12C FOR DET	NP		001
-080D	D2549030511671		. . TOILET UNIT AND TOILET SHROUD used on 001G SEE 25-41-51-12D FOR DET	NP		001
-080E	D2549020506271		. . TOILET UNIT AND TOILET SHROUD used on 001H, 001J, 001T SEE 25-41-51-12C FOR DET	NP		001
-080F	D2549020610271		. . TOILET UNIT AND TOILET SHROUD used on 001L SEE 25-41-51-12C FOR DET	NP		001
090A	D2549030604272		. . PAN-FLOOR used on 001A SEE 25-41-51-13E FOR DET	NP		001
-090B	D2549030411672		. . PAN-FLOOR used on 001B SEE 25-41-51-13R FOR DET	NP		001
-090C	D2549030507072		. . PAN-FLOOR used on 001C, 001S SEE 25-41-51-13C FOR DET	NP		001
-090D	D2549030514072		. . PAN-FLOOR used on 001D SEE 25-41-51-13D FOR DET	NP		001

- ITEM NOT ILLUSTRATED

FIG. ITEM	PART NUMBER	AIRLINE STOCK NUMBER	NOMENCLATURE 1234567	EFF CODE	UNITS PER ASSY
-090E	D2549010513072		. . PAN-FLOOR NP used on 001E, 001R SEE 25-41-51-13C FOR DET		001
-090F	D2549030504072		. . PAN-FLOOR NP used on 001F, 001M, 001N, 001Q SEE 25-41-51-13B FOR DET		001
-090G	D2549030602472		. . PAN-FLOOR NP used on 001G SEE 25-41-51-13T FOR DET		001
-090H	D2549020506272		. . PAN-FLOOR NP used on 001H SEE 25-41-51-13B FOR DET		001
-090J	D2549020605672		. . PAN-FLOOR NP used on 001J, 001T SEE 25-41-51-13B FOR DET		001
-090K	D2549020604872		. . PAN-FLOOR NP used on 001K SEE 25-41-51-13C FOR DET		001
-090L	D2549020708072		. . PAN-FLOOR NP used on 001L SEE 25-41-51-13G FOR DET		001
-090M	D2549010601672		. . PAN-FLOOR NP POST SB 25-1289 used on 001P SEE 25-41-51-13V FOR DET		001
100A	D2549010514073		. . LIGHT-DOOR NP used on 001A SEE 25-41-51-14A FOR DET		001
-100B	D2549030508473		. . LIGHT-DOOR NP used on 001B SEE 25-41-51-140 FOR DET		001

- ITEM NOT ILLUSTRATED

FIG. ITEM	PART NUMBER	AIRLINE STOCK NUMBER	NOMENCLATURE 1234567	EFF CODE	UNITS PER ASSY
-100C	D2549010512673		. . LIGHT-DOOR NP used on 001C, 001D, 001E, 001F, 001G, 001K, 001M, 001N, 001P, 001Q, 001R, 001S SEE 25-41-51-140 FOR DET		001
-100D	D2549020613673		. . LIGHT-DOOR NP used on 001H, 001J, 001T SEE 25-41-51-140 FOR DET		001
-100E	D2549020612273		. . LIGHT-DOOR NP used on 001L SEE 25-41-51-14A FOR DET		001
110A	D2549020706274		. . WASHBASIN UNIT NP used on 001A, 001F, 001K, 001N, 001P SEE 25-41-51-15C FOR DET		001
-110B	D2549020704674		. . WASHBASIN UNIT NP used on 001B, 001L SEE 25-41-51-15G FOR DET		001
-110C	D2549030509874		. . WASHBASIN UNIT NP used on 001C, 001E, 001R, 001S SEE 25-41-51-15G FOR DET		001
-110D	D2549020614474		. . WASHBASIN UNIT NP used on 001D SEE 25-41-51-15F FOR DET		001
-110E	D2549010603674		. . WASHBASIN UNIT NP used on 001G SEE 25-41-51-15C FOR DET		001
-110F	D2549030513874		. . WASHBASIN UNIT NP used on 001H SEE 25-41-51-15F FOR DET		001

- ITEM NOT ILLUSTRATED

FIG. ITEM	PART NUMBER	AIRLINE STOCK NUMBER	NOMENCLATURE 1234567		EFF CODE	UNITS PER ASSY
-110G	D2549020613674		. . WASHBASIN UNIT used on 001J, 001T SEE 25-41-51-15F FOR DET	NP		001
-110H	D2549030514674		. . WASHBASIN UNIT used on 001M, 001Q SEE 25-41-51-15G FOR DET	NP		001
120A	D2549010509475		. . DOOR ASSY-WASHBASIN UNIT used on 001A, 001F, 001P SEE 25-41-51-16B FOR DET	NP		001
-120B	D2549030506075		. . DOOR ASSY-WASHBASIN UNIT used on 001B SEE 25-41-51-16B FOR DET	NP		001
-120C	D2549020607075		. . DOOR ASSY-WASHBASIN UNIT used on 001C, 001D, 001E, 001G, 001K, 001M, 001Q, 001R, 001S SEE 25-41-51-16B FOR DET	NP		001
-120D	D2549030505475		. . DOOR ASSY-WASHBASIN UNIT used on 001H, 001J, 001T SEE 25-41-51-16B FOR DET	NP		001
-120E	D2549020610275		. . DOOR ASSY-WASHBASIN UNIT used on 001L SEE 25-41-51-16B FOR DET	NP		001
-120F	D2547160005675		. . DOOR ASSY-WASHBASIN UNIT POST SB 25-1574 used on 001N SEE 25-41-51-160 FOR DET	NP		001

- ITEM NOT ILLUSTRATED

FIG. ITEM	PART NUMBER	AIRLINE STOCK NUMBER	NOMENCLATURE 1234567	EFF CODE	UNITS PER ASSY
130A	D2549010509476		. . PANEL ASSY-WASHBASIN UNIT NP used on 001A, 001F, 001P SEE 25-41-51-17C FOR DET		001
-130B	D2549030506076		. . PANEL ASSY-WASHBASIN UNIT NP used on 001B SEE 25-41-51-17C FOR DET		001
-130C	D2549030504876		. . PANEL ASSY-WASHBASIN UNIT NP used on 001C, 001D, 001E, 001G, 001M, 001Q, 001R, 001S SEE 25-41-51-17C FOR DET		001
-130D	D2549020506276		. . PANEL ASSY-WASHBASIN UNIT NP used on 001H, 001J, 001T SEE 25-41-51-17C FOR DET		001
-130E	D2549010510876		. . PANEL ASSY-WASHBASIN UNIT NP used on 001K SEE 25-41-51-17C FOR DET		001
-130F	D2549020610276		. . PANEL ASSY-WASHBASIN UNIT NP used on 001L SEE 25-41-51-17C FOR DET		001
-130G	D2547160005676		. . PANEL ASSY-WASHBASIN UNIT NP POST SB 25-1574 used on 001N SEE 25-41-51-17C FOR DET		001

- ITEM NOT ILLUSTRATED

FIG. ITEM	PART NUMBER	AIRLINE STOCK NUMBER	NOMENCLATURE 1234567		EFF CODE	UNITS PER ASSY
140A	D2549030504877		. . BIN-WASTE,CHUTE-WASTE AND EXTINGUISHER-FIRE used on 001A, 001B, 001C, 001D, 001E, 001F, 001G, 001J, 001K, 001M, 001N, 001P, 001Q, 001R, 001S, 001T SEE 25-41-51-180 FOR DET	NP		001
-140B	D2549020506277		. . BIN-WASTE,CHUTE-WASTE AND EXTINGUISHER-FIRE used on 001H SEE 25-41-51-180 FOR DET	NP		001
-140C	D2549010509477		. . BIN-WASTE,CHUTE-WASTE AND EXTINGUISHER-FIRE used on 001L SEE 25-41-51-180 FOR DET	NP		001
150A	D2549030505678		. . CABINET-SERVICE used on 001A SEE 25-41-51-19E FOR DET	NP		001
-150B	D2549030506078		. . CABINET-SERVICE used on 001B SEE 25-41-51-19E FOR DET	NP		001
-150C	D2549030504878		. . CABINET-SERVICE PRE VSB A2-254-25-080 used on 001C, 001E, 001G, 001K, 001M, 001Q SEE 25-41-51-19E FOR DET	NP		001
-150D	D2549030505878		. . CABINET-SERVICE used on 001D SEE 25-41-51-19E FOR DET	NP		001
-150E	D2549030504078		. . CABINET-SERVICE used on 001F, 001N, 001P SEE 25-41-51-19E FOR DET	NP		001

- ITEM NOT ILLUSTRATED

FIG. ITEM	PART NUMBER	AIRLINE STOCK NUMBER	NOMENCLATURE 1234567		EFF CODE	UNITS PER ASSY
-150F	D2549030505478		. . CABINET-SERVICE used on 001H SEE 25-41-51-19E FOR DET	NP		001
-150G	D2549020605678		. . CABINET-SERVICE used on 001J, 001T SEE 25-41-51-19E FOR DET	NP		001
-150H	D2549020708078		. . CABINET-SERVICE used on 001L SEE 25-41-51-19F FOR DET	NP		001
-150J	R22540114500278		. . CABINET-SERVICE POST VSB A2-254-25-080 used on 001R, 001S SEE 25-41-51-19E FOR DET	NP		001
160A	D2549020702679		. . TABLE-NURSING used on 001A SEE 25-41-51-20A FOR DET	NP		001
-160B	D2549030508479		. . TABLE-NURSING used on 001B SEE 25-41-51-20A FOR DET	NP		001
-160C	D2549010510679		. . TABLE-NURSING used on 001C, 001G, 001S SEE 25-41-51-20A FOR DET	NP		001
-160D	D2549010512679		. . TABLE-NURSING used on 001D, 001E, 001F, 001K, 001M, 001N, 001P, 001Q, 001R SEE 25-41-51-20A FOR DET	NP		001
-160E	D2549020613679		. . TABLE-NURSING used on 001H, 001J, 001T SEE 25-41-51-20A FOR DET	NP		001
-160F	D2549020612279		. . TABLE-NURSING used on 001L SEE 25-41-51-20A FOR DET	NP		001

- ITEM NOT ILLUSTRATED

FIG. ITEM	PART NUMBER	AIRLINE STOCK NUMBER	NOMENCLATURE 1234567		EFF CODE	UNITS PER ASSY
170A	D2549010514080		. . VENTILATION SYSTEM used on 001A SEE 25-41-51-21A FOR DET	NP		001
-170B	D2549030508480		. . VENTILATION SYSTEM used on 001B SEE 25-41-51-21A FOR DET	NP		001
-170C	D2549010514280		. . VENTILATION SYSTEM used on 001C, 001D, 001E, 001F, 001G, 001K, 001M, 001N, 001P, 001Q, 001R, 001S SEE 25-41-51-21A FOR DET	NP		001
-170D	D2549020507080		. . VENTILATION SYSTEM used on 001H, 001J, 001T SEE 25-41-51-21A FOR DET	NP		001
-170E	D2549020707480		. . VENTILATION SYSTEM used on 001L SEE 25-41-51-21A FOR DET	NP		001
180A	D2549010606081		. . WATER SYSTEM-POTABLE used on 001A, 001C, 001D, 001E, 001F, 001G, 001K, 001L, 001N, 001P, 001R, 001S SEE 25-41-51-22D FOR DET	NP		001
-180B	D2549030608281		. . WATER SYSTEM-POTABLE used on 001B, 001M, 001Q SEE 25-41-51-22G FOR DET	NP		001
-180C	D2549030607481		. . WATER SYSTEM-POTABLE used on 001H SEE 25-41-51-22E FOR DET	NP		001
-180D	D2549030607081		. . WATER SYSTEM-POTABLE used on 001J, 001T SEE 25-41-51-22D FOR DET	NP		001

- ITEM NOT ILLUSTRATED

FIG. ITEM	PART NUMBER	AIRLINE STOCK NUMBER	NOMENCLATURE 1234567		EFF CODE	UNITS PER ASSY
190A	D2549010511082		. . WATER SYSTEM-WASTE used on 001A, 001C, 001E, 001F, 001G, 001K, 001N, 001P, 001R, 001S SEE 25-41-51-23B FOR DET	NP		001
-190B	D2549030506082		. . WATER SYSTEM-WASTE used on 001B SEE 25-41-51-23B FOR DET	NP		001
-190C	D2549030504882		. . WATER SYSTEM-WASTE used on 001D, 001L SEE 25-41-51-23B FOR DET	NP		001
-190D	D2549020506282		. . WATER SYSTEM-WASTE used on 001H SEE 25-41-51-23B FOR DET	NP		001
-190E	D2549020605682		. . WATER SYSTEM-WASTE used on 001J, 001T SEE 25-41-51-23B FOR DET	NP		001
-190F	D2549020507282		. . WATER SYSTEM-WASTE used on 001M, 001Q SEE 25-41-51-23B FOR DET	NP		001
200A	D2549020710683		. . ELECTRICAL SYSTEM used on 001A, 001B, 001D, 001F, 001K, 001M, 001N, 001P SEE 25-41-51-26K FOR DET	NP		001
-200B	D2549020509683		. . ELECTRICAL SYSTEM used on 001C, 001S SEE 25-41-51-26K FOR DET	NP		001
-200C	D2549030606483		. . ELECTRICAL SYSTEM used on 001G, 001L SEE 25-41-51-26J FOR DET	NP		001

- ITEM NOT ILLUSTRATED

FIG. ITEM	PART NUMBER	AIRLINE STOCK NUMBER	NOMENCLATURE 1234567	EFF CODE	UNITS PER ASSY
-200D	D2549030607483		. . ELECTRICAL SYSTEM NP used on 001H SEE 25-41-51-26K FOR DET		001
-200E	D2549020508283		. . ELECTRICAL SYSTEM NP used on 001E, 001J, 001Q, 001R, 001T SEE 25-41-51-26K FOR DET		001

- ITEM NOT ILLUSTRATED

THIS PAGE IS INTENTIONALLY LEFT BLANK

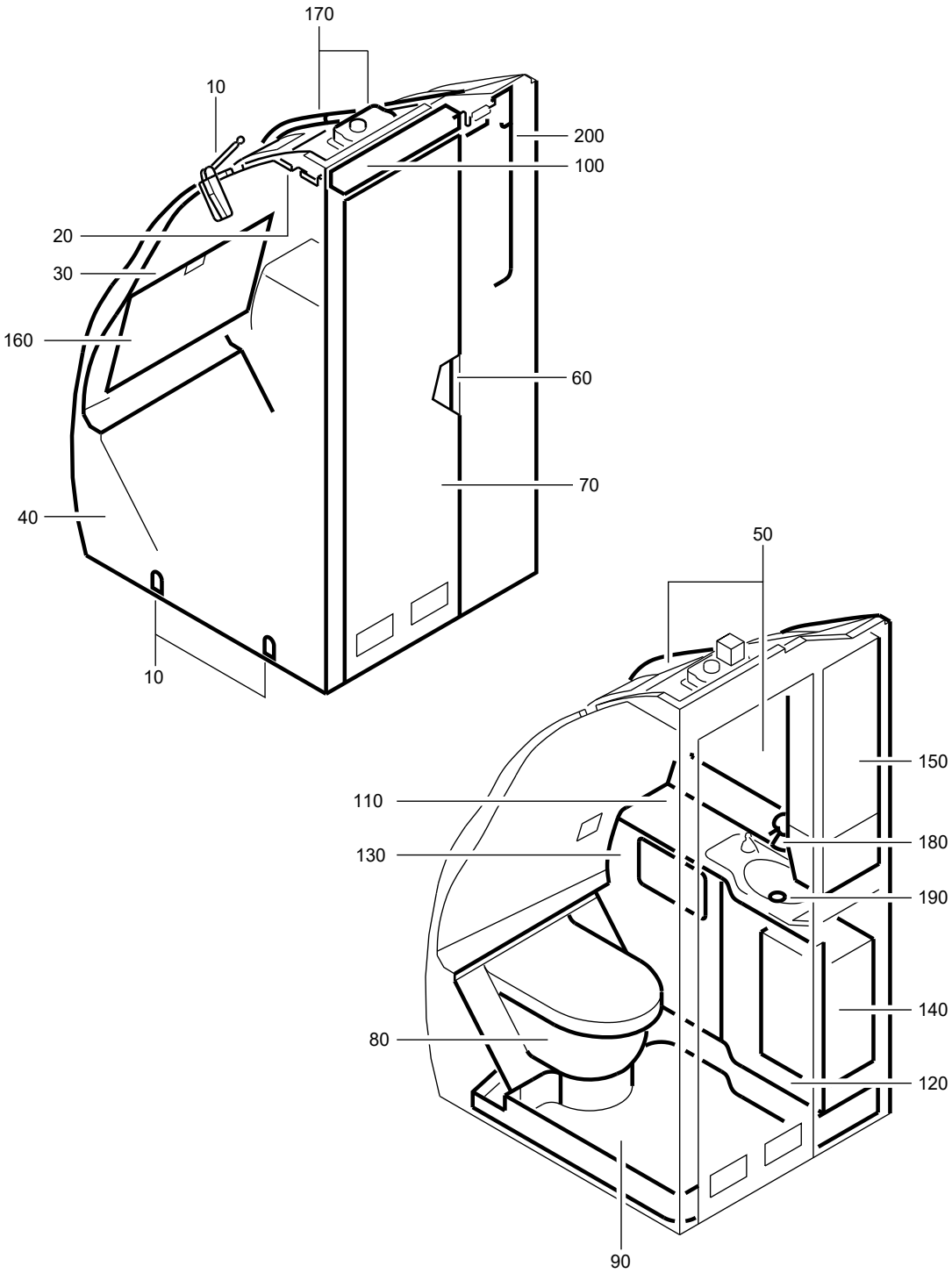

F_PL_254151_41_H_01_00

LAVATORY A ASSY
Figure 41H/EN254151SHEET41H01

FIG. ITEM	PART NUMBER	AIRLINE STOCK NUMBER	NOMENCLATURE 1234567	EFF CODE	UNITS PER ASSY
41H					
-001A	D2549020507400		. LAVATORY A ASSY SEE SIL 25-117 FOR DET PRE VSB A2-254-25-054		RF
-001B	D2549020507800		. LAVATORY A ASSY POST SB 25-1640 SEE SIL 25-117 FOR DET		RF
-001C	D2549010606400		. LAVATORY A ASSY PRE VSB A2-254-25-047 SEE SIL 25-117 FOR DET		RF
-001D	D2549030607600		. LAVATORY A ASSY SEE SIL 25-117 FOR DET		RF
-001E	D2549030607200		. LAVATORY A ASSY SEE SIL 25-117 FOR DET		RF
-001F	D2549030608800		. LAVATORY A ASSY SEE SIL 25-117 FOR DET		RF
-001G	D2549020508400		. LAVATORY A ASSY SEE SIL 25-117 FOR DET		RF
-001H	D2549020508600		. LAVATORY A ASSY PRE VSB A2-254-25-039 PRE VSB A2-254-25-100 SEE SIL 25-117 FOR DET		RF
-001J	D2549030607800		. LAVATORY A ASSY PRE VSB A2-254-25-039 SEE SIL 25-117 FOR DET PRE VSB A2-254-25-054		RF
-001K	D2549030608400		. LAVATORY A ASSY PRE VSB A2-254-25-045 SEE SIL 25-117 FOR DET		RF
-001L	D2549020507600		. LAVATORY A ASSY SEE SIL 25-117 FOR DET		RF

- ITEM NOT ILLUSTRATED

FIG. ITEM	PART NUMBER	AIRLINE STOCK NUMBER	NOMENCLATURE 1234567	EFF CODE	UNITS PER ASSY
-001M	D2549020508800		. LAVATORY A ASSY PRE VSB A2-254-25-042 SEE SIL 25-117 FOR DET		RF
-001N	D2549020508400		. LAVATORY A ASSY POST SB 25-1312 SEE SIL 25-117 FOR DET		RF
-001P	D2549020508400		. LAVATORY A ASSY SEE SIL 25-117 FOR DET		RF
-001Q	R225401168-000		. LAVATORY A ASSY POST VSB A2-254-25-039 SEE SIL 25-117 FOR DET		RF
-001R	R225401136-000		. LAVATORY A ASSY POST VSB A2-254-25-039 SEE SIL 25-117 FOR DET		RF
-001S	R225401152-006		. LAVATORY A ASSY POST VSB A2-254-25-042 SEE SIL 25-117 FOR DET		RF
-001T	R225401115-000		. LAVATORY A ASSY POST VSB A2-254-25-054 SEE SIL 25-117 FOR DET		RF
-001U	R225401168-020		. LAVATORY A ASSY POST VSB A2-254-25-054 SEE SIL 25-117 FOR DET		RF
-001V	R225401199-002		. LAVATORY A ASSY POST VSB A2-254-25-045 SEE SIL 25-117 FOR DET		RF
-001W	R225401183-008		. LAVATORY A ASSY POST VSB A2-254-25-047		RF
-001X	R225401136-022		. LAVATORY A ASSY POST VSB A2-254-25-100		RF

- ITEM NOT ILLUSTRATED

FIG. ITEM	PART NUMBER	AIRLINE STOCK NUMBER	NOMENCLATURE 1234567		EFF CODE	UNITS PER ASSY
010A	D2549030514861		. . ATTACHMENT-LAVATORY used on 001A, 001C, 001G, 001H, 001L, 001M, 001P, 001R, 001S, 001T, 001W, 001X SEE 25-41-51-02A FOR DET	NP		001
-010B	D2549030603061		. . ATTACHMENT-LAVATORY used on 001E SEE 25-41-51-02A FOR DET	NP		001
-010C	D2549030607461		. . ATTACHMENT-LAVATORY used on 001F SEE 25-41-51-02B FOR DET	NP		001
-010D	D2549020512461		. . ATTACHMENT-LAVATORY used on 001J, 001Q, 001U SEE 25-41-51-02C FOR DET	NP		001
-010E	D2549020705861		. . ATTACHMENT-LAVATORY used on 001D, 001K, 001N, 001V SEE 25-41-51-02D FOR DET	NP		001
-010F	D2547160007061		. . ATTACHMENT-LAVATORY POST SB 25-1640 used on 001B SEE 25-41-51-02D FOR DET	NP		001
020A	D2549020602663		. . PANEL-CEILING used on 001A, 001C, 001D, 001G, 001H, 001K, 001L, 001M, 001N, 001P, 001R, 001S, 001T, 001V, 001W, 001X SEE 25-41-51-040 FOR DET	NP		001
-020B	D2549010513863		. . PANEL-CEILING used on 001E SEE 25-41-51-040 FOR DET	NP		001
-020C	D2549020602863		. . PANEL-CEILING used on 001F SEE 25-41-51-040 FOR DET	NP		001

- ITEM NOT ILLUSTRATED

FIG. ITEM	PART NUMBER	AIRLINE STOCK NUMBER	NOMENCLATURE 1234567	EFF CODE	UNITS PER ASSY
-020D	D2549030507263		. . PANEL-CEILING NP used on 001J, 001Q, 001U SEE 25-41-51-040 FOR DET		001
-020E	D2549030401463		. . PANEL-CEILING NP POST SB 25-1640 used on 001B SEE 25-41-51-040 FOR DET		001
030A	D2549010512664		. . WALL-REAR NP used on 001A, 001B, 001D, 001H, 001L, 001M, 001R, 001S, 001T, 001X SEE 25-41-51-05B FOR DET		001
-030B	D2549020614864		. . WALL-REAR NP used on 001C, 001G, 001N, 001P, 001W SEE 25-41-51-05D FOR DET		001
-030C	D2549010600264		. . WALL-REAR NP used on 001E SEE 25-41-51-05D FOR DET		001
-030D	D2549030509464		. . WALL-REAR NP used on 001F SEE 25-41-51-05D FOR DET		001
-030E	D2549030601664		. . WALL-REAR NP used on 001J, 001Q, 001U SEE 25-41-51-05C FOR DET		001
-030F	D2549030606064		. . WALL-REAR NP used on 001K, 001V SEE 25-41-51-05G FOR DET		001
040A	D2549020507465		. . WALL-SIDE NP PRE VSB A2-254-25-054 used on 001A SEE 25-41-51-06T FOR DET		001

- ITEM NOT ILLUSTRATED

FIG. ITEM	PART NUMBER	AIRLINE STOCK NUMBER	NOMENCLATURE 1234567	EFF CODE	UNITS PER ASSY
-040B	D2549020708465		. . WALL-SIDE NP used on 001B SEE 25-41-51-06Q FOR DET		001
-040C	D2549010601265		. . WALL-SIDE NP used on 001C, 001W SEE 25-41-51-06M FOR DET		001
-040D	D2549020614465		. . WALL-SIDE NP used on 001D SEE 25-41-51-06L FOR DET		001
-040E	D2549030511865		. . WALL-SIDE NP used on 001E SEE 25-41-51-06M FOR DET		001
-040F	D2549030513865		. . WALL-SIDE NP used on 001F SEE 25-41-51-06P FOR DET		001
-040G	D2549030509065		. . WALL-SIDE NP used on 001G, 001P SEE 25-41-51-06K FOR DET		001
-040H	D2549030510865		. . WALL-SIDE NP used on 001H, 001R, 001X SEE 25-41-51-06M FOR DET		001
-040J	D2549030510265		. . WALL-SIDE NP PRE VSB A2-254-25-054 used on 001J, 001Q SEE 25-41-51-06N FOR DET		001
-040K	D2549030606065		. . WALL-SIDE NP PRE VSB A2-254-25-045 used on 001K SEE 25-41-51-48A FOR DET		001
-040L	D2549020707265		. . WALL-SIDE NP used on 001L SEE 25-41-51-06Q FOR DET		001

- ITEM NOT ILLUSTRATED

FIG. ITEM	PART NUMBER	AIRLINE STOCK NUMBER	NOMENCLATURE 1234567	EFF CODE	UNITS PER ASSY
-040M	D2549020703465		. . WALL-SIDE NP PRE VSB A2-254-25-042 used on 001M SEE 25-41-51-06P FOR DET		001
-040N	D2549020614865		. . WALL-SIDE NP used on 001N SEE 25-41-51-06K FOR DET		001
-040P	R22540115200065		. . WALL-SIDE NP POST VSB A2-254-25-042 used on 001S SEE 25-41-51-06P FOR DET		001
-040Q	R22540111500065		. . WALL-SIDE NP POST VSB A2-254-25-054 used on 001T SEE 25-41-51-06T FOR DET		001
-040R	R22540116800465		. . WALL-SIDE NP POST VSB A2-254-25-054 used on 001U SEE 25-41-51-06N FOR DET		001
-040S	R22540119900265		. . WALL-SIDE NP POST VSB A2-254-25-045 used on 001V SEE 25-41-51-48A FOR DET		001
050A	D2549010606066		. . HOUSING NP used on 001A, 001G, 001N, 001P, 001T SEE 25-41-51-07G FOR DET		001
-050B	D2547160007066		. . HOUSING NP POST SB 25-1640 used on 001B SEE 25-41-51-07E FOR DET		001

- ITEM NOT ILLUSTRATED

FIG. ITEM	PART NUMBER	AIRLINE STOCK NUMBER	NOMENCLATURE 1234567	EFF CODE	UNITS PER ASSY
-050C	D2549010601266		. . HOUSING NP used on 001C, 001W SEE 25-41-51-07F FOR DET		001
-050D	D2549030505866		. . HOUSING NP used on 001D SEE 25-41-51-07D FOR DET		001
-050E	D2549030607266		. . HOUSING NP used on 001E SEE 25-41-51-07J FOR DET		001
-050F	D2549020506266		. . HOUSING NP used on 001F SEE 25-41-51-07D FOR DET		001
-050G	D2549030510866		. . HOUSING NP used on 001H, 001R, 001X SEE 25-41-51-07F FOR DET		001
-050H	D2549030607866		. . HOUSING NP used on 001J, 001Q, 001U SEE 25-41-51-07J FOR DET		001
-050J	D2549030608466		. . HOUSING NP used on 001K, 001V SEE 25-41-51-07R FOR DET		001
-050K	D2549020707266		. . HOUSING NP used on 001L SEE 25-41-51-07G FOR DET		001
-050L	D2549020703466		. . HOUSING NP used on 001M, 001S SEE 25-41-51-07G FOR DET		001

- ITEM NOT ILLUSTRATED

FIG. ITEM	PART NUMBER	AIRLINE STOCK NUMBER	NOMENCLATURE 1234567	EFF CODE	UNITS PER ASSY
060A	D2549010500069		. . DOOR INSTL NP used on 001A, 001B, 001C, 001D, 001E, 001F, 001G, 001H, 001J, 001K, 001L, 001M, 001N, 001P, 001Q, 001R, 001S, 001T, 001U, 001V, 001W, 001X SEE 25-41-51-100 FOR DET		001
070A	A225400276-594		. . DOOR ASSY-SINGLE used on 001A, 001T SEE 25-41-51-11G FOR DET		001
-070B	A225400276-598		. . DOOR ASSY-SINGLE used on 001B SEE 25-41-51-11G FOR DET		001
-070C	A225400276-924		. . DOOR ASSY-SINGLE used on 001C, 001W SEE 25-41-51-11E FOR DET		001
-070D	A225400276-588		. . DOOR ASSY-SINGLE used on 001D SEE 25-41-51-11F FOR DET		001
-070E	A225400276-574		. . DOOR ASSY-SINGLE used on 001E SEE 25-41-51-11E FOR DET		001
-070F	A225400276-590		. . DOOR ASSY-SINGLE used on 001F SEE 25-41-51-11E FOR DET		001
-070G	A225400276-592		. . DOOR ASSY-SINGLE used on 001G, 001N, 001P SEE 25-41-51-11E FOR DET		001
-070H	A225400276-576		. . DOOR ASSY-SINGLE PRE VSB A2-254-25-039 used on 001H, 001X SEE 25-41-51-11E FOR DET		001

- ITEM NOT ILLUSTRATED

FIG. ITEM	PART NUMBER	AIRLINE STOCK NUMBER	NOMENCLATURE 1234567		EFF CODE	UNITS PER ASSY
-070J	A225400276-932		. . DOOR ASSY-SINGLE PRE VSB A2-254-25-039 used on 001J, 001U SEE 25-41-51-11D FOR DET			001
-070K	A225400276-960		. . DOOR ASSY-SINGLE used on 001K, 001V SEE 25-41-51-11J FOR DET			001
-070L	A225400276-584		. . DOOR ASSY-SINGLE used on 001L SEE 25-41-51-11F FOR DET			001
-070M	A225400276-946		. . DOOR ASSY-SINGLE used on 001M, 001S SEE 25-41-51-11G FOR DET			001
-070N	A225400276-990		. . DOOR ASSY-SINGLE POST VSB A2-254-25-039 used on 001Q SEE 25-41-51-11D FOR DET			001
-070P	A225400276-992		. . DOOR ASSY-SINGLE POST VSB A2-254-25-039 used on 001R SEE 25-41-51-11E FOR DET			001
080A	D2549020507471		. . TOILET UNIT AND TOILET SHROUD used on 001A, 001T SEE 25-41-51-12D FOR DET	NP		001
-080B	D2549020604271		. . TOILET UNIT AND TOILET SHROUD used on 001B, 001D, 001E, 001G, 001H, 001K, 001L, 001M, 001N, 001P, 001R, 001S, 001V, 001X SEE 25-41-51-12C FOR DET	NP		001

- ITEM NOT ILLUSTRATED

FIG. ITEM	PART NUMBER	AIRLINE STOCK NUMBER	NOMENCLATURE 1234567		EFF CODE	UNITS PER ASSY
-080C	D2549010510471		. . TOILET UNIT AND TOILET SHROUD used on 001C, 001W SEE 25-41-51-12C FOR DET	NP		001
-080D	D2549020506271		. . TOILET UNIT AND TOILET SHROUD used on 001F SEE 25-41-51-12C FOR DET	NP		001
-080E	D2549030507271		. . TOILET UNIT AND TOILET SHROUD used on 001J, 001Q, 001U SEE 25-41-51-12D FOR DET	NP		001
090A	D2549020608672		. . PAN-FLOOR used on 001A, 001T SEE 25-41-51-13B FOR DET	NP		001
-090B	D2549030504672		. . PAN-FLOOR used on 001B SEE 25-41-51-13B FOR DET	NP		001
-090C	D2549010510472		. . PAN-FLOOR used on 001C, 001W SEE 25-41-51-13B FOR DET	NP		001
-090D	D2549030514072		. . PAN-FLOOR used on 001D SEE 25-41-51-13D FOR DET	NP		001
-090E	D2549030603072		. . PAN-FLOOR used on 001E SEE 25-41-51-13E FOR DET	NP		001
-090F	D2549030608872		. . PAN-FLOOR used on 001F SEE 25-41-51-13E FOR DET	NP		001

- ITEM NOT ILLUSTRATED

FIG. ITEM	PART NUMBER	AIRLINE STOCK NUMBER	NOMENCLATURE 1234567	EFF CODE	UNITS PER ASSY
-090G	D2549010510272		. . PAN-FLOOR NP used on 001G, 001N, 001P SEE 25-41-51-13B FOR DET		001
-090H	D2549020702272		. . PAN-FLOOR NP PRE VSB A2-254-25-039 used on 001H, 001X SEE 25-41-51-13D FOR DET		001
-090J	D2549020512472		. . PAN-FLOOR NP PRE VSB A2-254-25-039 used on 001J, 001U SEE 25-41-51-13H FOR DET		001
-090K	D2549030606072		. . PAN-FLOOR NP used on 001K, 001V SEE 25-41-51-13E FOR DET		001
-090L	D2549030504072		. . PAN-FLOOR NP used on 001L SEE 25-41-51-13B FOR DET		001
-090M	D2549020704272		. . PAN-FLOOR NP used on 001M, 001S SEE 25-41-51-13D FOR DET		001
-090N	R22540116800072		. . PAN-FLOOR NP POST VSB A2-254-25-039 used on 001Q SEE 25-41-51-13H FOR DET		001
-090P	R22540113600072		. . PAN-FLOOR NP POST VSB A2-254-25-039 used on 001R SEE 25-41-51-13D FOR DET		001

- ITEM NOT ILLUSTRATED

FIG. ITEM	PART NUMBER	AIRLINE STOCK NUMBER	NOMENCLATURE 1234567	EFF CODE	UNITS PER ASSY
100A	D2549010512673		. . LIGHT-DOOR NP used on 001A, 001C, 001D, 001G, 001H, 001K, 001L, 001M, 001N, 001P, 001R, 001S, 001T, 001V, 001W, 001X SEE 25-41-51-140 FOR DET		001
-100B	D2549010600273		. . LIGHT-DOOR NP used on 001E SEE 25-41-51-14A FOR DET		001
-100C	D2549020613673		. . LIGHT-DOOR NP used on 001F SEE 25-41-51-140 FOR DET		001
-100D	D2549030508673		. . LIGHT-DOOR NP used on 001J, 001Q, 001U SEE 25-41-51-14A FOR DET		001
-100E	D2547160007473		. . LIGHT-DOOR NP POST SB 25-1640 used on 001B SEE 25-41-51-14A FOR DET		001
110A	D2549030514674		. . WASHBASIN UNIT NP used on 001A, 001L, 001M, 001S, 001T SEE 25-41-51-15G FOR DET		001
-110B	D2549020605874		. . WASHBASIN UNIT NP used on 001B SEE 25-41-51-15C FOR DET		001
-110C	D2549010603274		. . WASHBASIN UNIT NP used on 001C, 001W SEE 25-41-51-15F FOR DET		001
-110D	D2549020614474		. . WASHBASIN UNIT NP used on 001D SEE 25-41-51-15F FOR DET		001

- ITEM NOT ILLUSTRATED

FIG. ITEM	PART NUMBER	AIRLINE STOCK NUMBER	NOMENCLATURE 1234567		EFF CODE	UNITS PER ASSY
-110E	D2549020706274		. . WASHBASIN UNIT used on 001E, 001K, 001V SEE 25-41-51-15C FOR DET	NP		001
-110F	D2549030513874		. . WASHBASIN UNIT used on 001F SEE 25-41-51-15F FOR DET	NP		001
-110G	D2549020705674		. . WASHBASIN UNIT used on 001G, 001N, 001P SEE 25-41-51-15H FOR DET	NP		001
-110H	D2549020710274		. . WASHBASIN UNIT PRE VSB A2-254-25-039 used on 001H, 001X SEE 25-41-51-15H FOR DET	NP		001
-110J	D2549030600874		. . WASHBASIN UNIT PRE VSB A2-254-25-039 used on 001J, 001U SEE 25-41-51-15G FOR DET	NP		001
-110K	R22540116800074		. . WASHBASIN UNIT POST VSB A2-254-25-039 used on 001Q SEE 25-41-51-15G FOR DET	NP		001
-110L	R22540113600074		. . WASHBASIN UNIT POST VSB A2-254-25-039 used on 001R SEE 25-41-51-15H FOR DET	NP		001
120A	D2549010509475		. . DOOR ASSY-WASHBASIN UNIT used on 001A, 001T SEE 25-41-51-16B FOR DET	NP		001

- ITEM NOT ILLUSTRATED

FIG. ITEM	PART NUMBER	AIRLINE STOCK NUMBER	NOMENCLATURE 1234567	EFF CODE	UNITS PER ASSY
-120B	D2549020607075		. . DOOR ASSY-WASHBASIN UNIT NP used on 001B, 001D, 001E, 001G, 001H, 001L, 001M, 001N, 001P, 001R, 001S, 001X SEE 25-41-51-16B FOR DET		001
-120C	D2549010510475		. . DOOR ASSY-WASHBASIN UNIT NP used on 001C, 001W SEE 25-41-51-16B FOR DET		001
-120D	D2549030505475		. . DOOR ASSY-WASHBASIN UNIT NP used on 001F SEE 25-41-51-16B FOR DET		001
-120E	D2549030507275		. . DOOR ASSY-WASHBASIN UNIT NP used on 001J, 001Q, 001U SEE 25-41-51-16C FOR DET		001
-120F	D2549030606075		. . DOOR ASSY-WASHBASIN UNIT NP used on 001K, 001V SEE 25-41-51-16E FOR DET		001
130A	D2549010509476		. . PANEL ASSY-WASHBASIN UNIT NP used on 001A, 001T SEE 25-41-51-17C FOR DET		001
-130B	D2549030504876		. . PANEL ASSY-WASHBASIN UNIT NP used on 001B, 001D, 001E, 001G, 001H, 001K, 001L, 001M, 001N, 001P, 001R, 001S, 001V, 001X SEE 25-41-51-17C FOR DET		001

- ITEM NOT ILLUSTRATED

FIG. ITEM	PART NUMBER	AIRLINE STOCK NUMBER	NOMENCLATURE 1234567		EFF CODE	UNITS PER ASSY
-130C	D2549010604876		. . PANEL ASSY-WASHBASIN UNIT used on 001C, 001W SEE 25-41-51-17D FOR DET	NP		001
-130D	D2549020506276		. . PANEL ASSY-WASHBASIN UNIT used on 001F SEE 25-41-51-17C FOR DET	NP		001
-130E	D2549030507276		. . PANEL ASSY-WASHBASIN UNIT used on 001J, 001Q, 001U SEE 25-41-51-17D FOR DET	NP		001
140A	D2549030504877		. . BIN-WASTE,CHUTE-WASTE AND EXTINGUISHER-FIRE used on 001A, 001B, 001C, 001D, 001E, 001G, 001H, 001J, 001K, 001L, 001M, 001N, 001P, 001Q, 001R, 001S, 001T, 001U, 001V, 001W, 001X SEE 25-41-51-180 FOR DET	NP		001
-140B	D2549020506277		. . BIN-WASTE,CHUTE-WASTE AND EXTINGUISHER-FIRE used on 001F SEE 25-41-51-180 FOR DET	NP		001
150A	D2549030504078		. . CABINET-SERVICE PRE VSB A2-254-25-054 used on 001A SEE 25-41-51-19E FOR DET	NP		001
-150B	D2549020605878		. . CABINET-SERVICE used on 001B SEE 25-41-51-19F FOR DET	NP		001

- ITEM NOT ILLUSTRATED

FIG. ITEM	PART NUMBER	AIRLINE STOCK NUMBER	NOMENCLATURE 1234567		EFF CODE	UNITS PER ASSY
-150C	D2549030504878		. . CABINET-SERVICE PRE VSB A2-254-25-039 PRE VSB A2-254-25-042 PRE VSB A2-254-25-045 used on 001C, 001G, 001H, 001K, 001L, 001M, 001N, 001P, 001W, 001X SEE 25-41-51-19E FOR DET	NP		001
-150D	D2549030505878		. . CABINET-SERVICE used on 001D SEE 25-41-51-19E FOR DET	NP		001
-150E	D2549010513878		. . CABINET-SERVICE used on 001E SEE 25-41-51-19F FOR DET	NP		001
-150F	D2549030505478		. . CABINET-SERVICE used on 001F SEE 25-41-51-19E FOR DET	NP		001
-150G	D2549030507278		. . CABINET-SERVICE PRE VSB A2-254-25-039 PRE VSB A2-254-25-054 used on 001J SEE 25-41-51-19F FOR DET	NP		001
-150H	R22540163900078		. . CABINET-SERVICE POST VSB A2-254-25-039 POST VSB A2-254-25-042 used on 001R, 001S SEE 25-41-51-19E FOR DET	NP		001
-150J	R22540116800078		. . CABINET-SERVICE POST VSB A2-254-25-039 used on 001Q SEE 25-41-51-19F FOR DET	NP		001

- ITEM NOT ILLUSTRATED

FIG. ITEM	PART NUMBER	AIRLINE STOCK NUMBER	NOMENCLATURE 1234567		EFF CODE	UNITS PER ASSY
-150K	R22540111500078		. . CABINET-SERVICE POST VSB A2-254-25-054 used on 001T SEE 25-41-51-19E FOR DET	NP		001
-150L	R22540116800478		. . CABINET-SERVICE POST VSB A2-254-25-054 used on 001U SEE 25-41-51-19F FOR DET	NP		001
-150M	R22540119900278		. . CABINET-SERVICE POST VSB A2-254-25-045 used on 001V SEE 25-41-51-19E FOR DET	NP		001
160A	D2549010512679		. . TABLE-NURSING used on 001A, 001D, 001G, 001M, 001N, 001P, 001S, 001T SEE 25-41-51-20A FOR DET	NP		001
-160B	D2549010510679		. . TABLE-NURSING used on 001B, 001C, 001H, 001K, 001L, 001R, 001V, 001W, 001X SEE 25-41-51-20A FOR DET	NP		001
-160C	D2549010600279		. . TABLE-NURSING used on 001E SEE 25-41-51-20A FOR DET	NP		001
-160D	D2549020613679		. . TABLE-NURSING used on 001F SEE 25-41-51-20A FOR DET	NP		001
-160E	D2549030508679		. . TABLE-NURSING used on 001J, 001Q, 001U SEE 25-41-51-20A FOR DET	NP		001

- ITEM NOT ILLUSTRATED

FIG. ITEM	PART NUMBER	AIRLINE STOCK NUMBER	NOMENCLATURE 1234567		EFF CODE	UNITS PER ASSY
170A	D2549010514280		. . VENTILATION SYSTEM used on 001A, 001B, 001C, 001D, 001G, 001H, 001K, 001L, 001M, 001N, 001P, 001R, 001S, 001T, 001V, 001W, 001X SEE 25-41-51-21A FOR DET	NP		001
-170B	D2549030507680		. . VENTILATION SYSTEM used on 001E SEE 25-41-51-21A FOR DET	NP		001
-170C	D2549020507080		. . VENTILATION SYSTEM used on 001F SEE 25-41-51-21A FOR DET	NP		001
-170D	D2549030508680		. . VENTILATION SYSTEM used on 001J, 001Q, 001U SEE 25-41-51-21A FOR DET	NP		001
180A	D2549010606081		. . WATER SYSTEM-POTABLE used on 001A, 001B, 001D, 001E, 001G, 001H, 001J, 001K, 001L, 001M, 001N, 001P, 001Q, 001R, 001S, 001T, 001U, 001V, 001X SEE 25-41-51-22D FOR DET	NP		001
-180B	D2549010606481		. . WATER SYSTEM-POTABLE used on 001C, 001W SEE 25-41-51-22F FOR DET	NP		001
-180C	D2549030607481		. . WATER SYSTEM-POTABLE used on 001F SEE 25-41-51-22E FOR DET	NP		001
190A	D2549010511082		. . WATER SYSTEM-WASTE used on 001A, 001C, 001E, 001H, 001J, 001K, 001L, 001M, 001Q, 001R, 001S, 001T, 001U, 001V, 001W, 001X SEE 25-41-51-23B FOR DET	NP		001

- ITEM NOT ILLUSTRATED

FIG. ITEM	PART NUMBER	AIRLINE STOCK NUMBER	NOMENCLATURE 1234567		EFF CODE	UNITS PER ASSY
-190B	D2549030504882		. . WATER SYSTEM-WASTE used on 001B, 001D, 001G, 001N, 001P SEE 25-41-51-23B FOR DET	NP		001
-190C	D2549020506282		. . WATER SYSTEM-WASTE used on 001F SEE 25-41-51-23B FOR DET	NP		001
200A	D2549020710683		. . ELECTRICAL SYSTEM used on 001A, 001D, 001E, 001G, 001H, 001J, 001K, 001L, 001M, 001N, 001P, 001Q, 001R, 001S, 001T, 001U, 001V, 001X SEE 25-41-51-26K FOR DET	NP		001
-200B	D2549010606483		. . ELECTRICAL SYSTEM used on 001C, 001W SEE 25-41-51-26K FOR DET	NP		001
-200C	D2549030607483		. . ELECTRICAL SYSTEM used on 001F SEE 25-41-51-26K FOR DET	NP		001
-200D	F2547160007483		. . ELECTRICAL SYSTEM POST SB 25-1640 used on 001B SEE 25-41-51-26Q FOR DET	NP		001

- ITEM NOT ILLUSTRATED

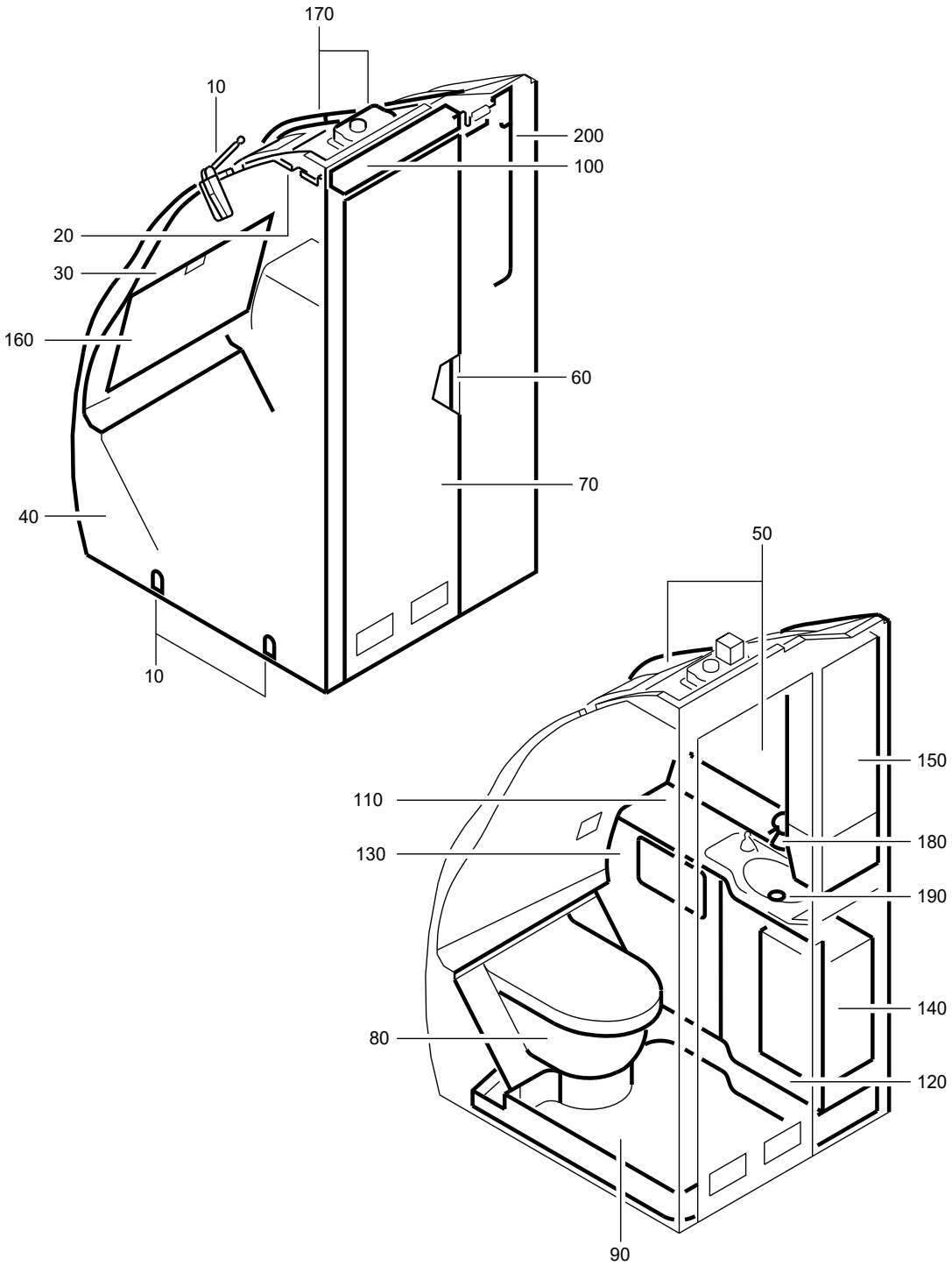

F_PL_254151_41_J_01_00

LAVATORY A ASSY
Figure 41J/EN254151SHEET41J01

FIG. ITEM	PART NUMBER	AIRLINE STOCK NUMBER	NOMENCLATURE 1234567	EFF CODE	UNITS PER ASSY
41J					
-001A	D2549030606000		. LAVATORY A ASSY PRE VSB A2-254-25-045 SEE SIL 25-117 FOR DET		RF
-001B	D2549020713000		. LAVATORY A ASSY SEE SIL 25-117 FOR DET		RF
-001C	D2549020509000		. LAVATORY A ASSY SEE SIL 25-117 FOR DET		RF
-001D	D2549020714600		. LAVATORY A ASSY SEE SIL 25-117 FOR DET		RF
-001E	D2549030600200		. LAVATORY A ASSY SEE SIL 25-117 FOR DET		RF
-001F	D2549020509800		. LAVATORY A ASSY PRE VSB A2-254-25-020 SEE SIL 25-117 FOR DET		RF
-001G	D2549020509600		. LAVATORY A ASSY PRE VSB A2-254-25-080 SEE SIL 25-117 FOR DET		RF
-001H	D2549010606600		. LAVATORY A ASSY SEE SIL 25-117 FOR DET		RF
-001J	D2549020705800		. LAVATORY A ASSY SEE SIL 25-117 FOR DET		RF
-001K	D2549020513000		. LAVATORY A ASSY SEE SIL 25-117 FOR DET		RF
-001L	D2549020514400		. LAVATORY A ASSY PRE VSB A2-254-25-154 SEE SIL 25-117 FOR DET		RF
-001M	D2549010606800		. LAVATORY A ASSY SEE SIL 25-117 FOR DET		RF

- ITEM NOT ILLUSTRATED

FIG. ITEM	PART NUMBER	AIRLINE STOCK NUMBER	NOMENCLATURE 1234567	EFF CODE	UNITS PER ASSY
-001N	D2549010607000		. LAVATORY A ASSY SEE SIL 25-117 FOR DET		RF
-001P	D2549030600200		. LAVATORY A ASSY SEE SIL 25-117 FOR DET		RF
-001Q	D2549020513000		. LAVATORY A ASSY SEE SIL 25-117 FOR DET		RF
-001R	D2549030606000		. LAVATORY A ASSY SEE SIL 25-117 FOR DET		RF
-001S	R225401605000		. LAVATORY A ASSY POST VSB A2-254-25-020 SEE SIL 25-117 FOR DET		RF
-001T	R225401613-000		. LAVATORY A ASSY POST VSB A2-254-25-080 SEE SIL 25-117 FOR DET		RF
-001U	R225401611-008		. LAVATORY A ASSY POST VSB A2-254-25-045 SEE SIL 25-117 FOR DET		RF
-001V	R225401619-000		. LAVATORY A ASSY POST VSB A2-254-25-154 SEE SIL 25-117 FOR DET		RF
010A	D2549030514861		. . ATTACHMENT-LAVATORY NP used on 001D, 001E, 001F, 001G, 001H, 001L, 001M, 001N, 001S, 001T, 001V SEE 25-41-51-02A FOR DET		001
-010B	D2549020710061		. . ATTACHMENT-LAVATORY NP used on 001B SEE 25-41-51-02A FOR DET		001
-010C	D2549030603061		. . ATTACHMENT-LAVATORY NP used on 001C SEE 25-41-51-02A FOR DET		001

- ITEM NOT ILLUSTRATED

FIG. ITEM	PART NUMBER	AIRLINE STOCK NUMBER	NOMENCLATURE 1234567		EFF CODE	UNITS PER ASSY
-010D	D2549020705861		. . ATTACHMENT-LAVATORY used on 001A, 001J, 001K, 001Q, 001R, 001U SEE 25-41-51-02D FOR DET	NP		001
-010E	D2549030514861		. . ATTACHMENT-LAVATORY used on 001P SEE 25-41-51-02A FOR DET	NP		001
020A	D2549020602663		. . PANEL-CEILING used on 001A, 001D, 001E, 001F, 001G, 001H, 001J, 001K, 001L, 001M, 001N, 001P, 001Q, 001R, 001S, 001T, 001U, 001V SEE 25-41-51-040 FOR DET	NP		001
-020B	D2549020710063		. . PANEL-CEILING used on 001B SEE 25-41-51-040 FOR DET	NP		001
-020C	D2549010513863		. . PANEL-CEILING used on 001C SEE 25-41-51-040 FOR DET	NP		001
030A	D2549010514464		. . WALL-REAR used on 001D, 001F, 001S SEE 25-41-51-05B FOR DET	NP		001
-030B	D2549020710064		. . WALL-REAR used on 001B SEE 25-41-51-05C FOR DET	NP		001
-030C	D2549010600264		. . WALL-REAR used on 001C SEE 25-41-51-05D FOR DET	NP		001
-030D	D2549010512664		. . WALL-REAR used on 001E, 001H, 001L, 001V SEE 25-41-51-05B FOR DET	NP		001

- ITEM NOT ILLUSTRATED

FIG. ITEM	PART NUMBER	AIRLINE STOCK NUMBER	NOMENCLATURE 1234567	EFF CODE	UNITS PER ASSY
-030E	D2549030609264		. . WALL-REAR NP used on 001G, 001M, 001N, 001T SEE 25-41-51-05C FOR DET		001
-030F	D2549020614864		. . WALL-REAR NP used on 001J, 001K, 001Q SEE 25-41-51-05D FOR DET		001
-030G	D2549030606064		. . WALL-REAR NP used on 001A, 001R, 001U SEE 25-41-51-05G FOR DET		001
-030H	D2549010512664		. . WALL-REAR NP used on 001P SEE 25-41-51-05B FOR DET		001
040A	D2549030606065		. . WALL-SIDE NP PRE VSB A2-254-25-045 used on 001A SEE 25-41-51-48A FOR DET		001
-040B	D2549020802465		. . WALL-SIDE NP used on 001B SEE 25-41-51-06Z FOR DET		001
-040C	D2549030511865		. . WALL-SIDE NP used on 001C SEE 25-41-51-06M FOR DET		001
-040D	D2549020714665		. . WALL-SIDE NP PRE VSB A2-254-25-020 used on 001D, 001F SEE 25-41-51-06T FOR DET		001
-040E	D2549030600265		. . WALL-SIDE NP used on 001E SEE 25-41-51-06T FOR DET		001

- ITEM NOT ILLUSTRATED

FIG. ITEM	PART NUMBER	AIRLINE STOCK NUMBER	NOMENCLATURE 1234567		EFF CODE	UNITS PER ASSY
-040F	D2549020509665		. . WALL-SIDE PRE VSB A2-254-25-080 used on 001G SEE 25-41-51-06T FOR DET	NP		001
-040G	D2549010606665		. . WALL-SIDE used on 001H SEE 25-41-51-06T FOR DET	NP		001
-040H	D2549020705865		. . WALL-SIDE used on 001J, 001K, 001Q SEE 25-41-51-06T FOR DET	NP		001
-040J	D2549020700465		. . WALL-SIDE used on 001L, 001V SEE 25-41-51-06N FOR DET	NP		001
-040K	D2549010606865		. . WALL-SIDE used on 001M, 001N SEE 25-41-51-06U FOR DET	NP		001
-040L	D2549030600265		. . WALL-SIDE used on 001P SEE 25-41-51-06T FOR DET	NP		001
-040M	D2549030606165		. . WALL-SIDE used on 001R SEE 25-41-51-060 FOR DET	NP		001
-040N	R22540160500065		. . WALL-SIDE POST VSB A2-254-25-020 used on 001S SEE 25-41-51-06T FOR DET	NP		001
-040P	R22540161300065		. . WALL-SIDE POST VSB A2-254-25-080 used on 001T SEE 25-41-51-06T FOR DET	NP		001

- ITEM NOT ILLUSTRATED

FIG. ITEM	PART NUMBER	AIRLINE STOCK NUMBER	NOMENCLATURE 1234567		EFF CODE	UNITS PER ASSY
-040Q	R22540119900265		. . WALL-SIDE POST VSB A2-254-25-045 used on 001U SEE 25-41-51-048A FOR DET	NP		001
050A	D2549030608466		. . HOUSING used on 001A, 001U SEE 25-41-51-07R FOR DET	NP		001
-050B	D2549020713066		. . HOUSING used on 001B SEE 25-41-51-07J FOR DET	NP		001
-050C	D2549030607266		. . HOUSING used on 001C SEE 25-41-51-07J FOR DET	NP		001
-050D	D2549020607666		. . HOUSING used on 001D, 001F, 001S SEE 25-41-51-07D FOR DET	NP		001
-050E	D2549030600266		. . HOUSING used on 001E, 001P SEE 25-41-51-07J FOR DET	NP		001
-050F	D2549020509666		. . HOUSING used on 001G, 001T SEE 25-41-51-07J FOR DET	NP		001
-050G	D2549010606666		. . HOUSING used on 001H SEE 25-41-51-07J FOR DET	NP		001
-050H	D2549020705866		. . HOUSING used on 001J, 001K, 001Q SEE 25-41-51-07J FOR DET	NP		001
-050J	D2549020607066		. . HOUSING used on 001L, 001V SEE 25-41-51-07Y FOR DET	NP		001

- ITEM NOT ILLUSTRATED

FIG. ITEM	PART NUMBER	AIRLINE STOCK NUMBER	NOMENCLATURE 1234567		EFF CODE	UNITS PER ASSY
-050K	D2549010606866		. . HOUSING used on 001M, 001N SEE 25-41-51-07J FOR DET	NP		001
-050L	D2549030606166		. . HOUSING used on 001R SEE 25-41-51-07R FOR DET	NP		001
060A	D2549010500069		. . DOOR INSTL used on 001A, 001B, 001C, 001D, 001E, 001F, 001G, 001H, 001J, 001K, 001L, 001M, 001N, 001P, 001Q, 001S, 001T, 001U, 001V SEE 25-41-51-100 FOR DET	NP		001
-060B	D2549020401269		. . DOOR INSTL used on 001R SEE 25-41-51-10A FOR DET	NP		001
070A	A225400276-960		. . DOOR ASSY-SINGLE used on 001A, 001U SEE 25-41-51-11J FOR DET			001
-070B	A225400276-982		. . DOOR ASSY-SINGLE used on 001B SEE 25-41-51-11J FOR DET			001
-070C	A225400276-578		. . DOOR ASSY-SINGLE used on 001C SEE 25-41-51-11F FOR DET			001
-070D	A225400276-958		. . DOOR ASSY-SINGLE used on 001D, 001F, 001S SEE 25-41-51-11J FOR DET			001
-070E	A225400276-848		. . DOOR ASSY-SINGLE used on 001E, 001P SEE 25-41-51-11J FOR DET			001

- ITEM NOT ILLUSTRATED

FIG. ITEM	PART NUMBER	AIRLINE STOCK NUMBER	NOMENCLATURE 1234567	EFF CODE	UNITS PER ASSY
-070F	A225400276-934		. . DOOR ASSY-SINGLE used on 001G, 001T SEE 25-41-51-11F FOR DET		001
-070G	A225400278-510		. . DOOR ASSY-SINGLE used on 001H SEE 25-41-51-11H FOR DET		001
-070H	A225400276-966		. . DOOR ASSY-SINGLE used on 001J, 001K, 001Q SEE 25-41-51-11J FOR DET		001
-070J	A225400276-968		. . DOOR ASSY-SINGLE used on 001L, 001V SEE 25-41-51-11J FOR DET		001
-070K	A225400278-800		. . DOOR ASSY-SINGLE used on 001M, 001N SEE 25-41-51-11H FOR DET		001
-070L	A2254002768960		. . DOOR ASSY-SINGLE used on 001A, 001R SEE 25-41-51-11J FOR DET		001
080A	D2549020604271		. . TOILET UNIT AND TOILET SHROUD NP used on 001A, 001C, 001E, 001G, 001H, 001M, 001P, 001R, 001T, 001U SEE 25-41-51-12C FOR DET		001
-080B	D2549020710071		. . TOILET UNIT AND TOILET SHROUD NP used on 001B SEE 25-41-51-12D FOR DET		001
-080C	D2549020607671		. . TOILET UNIT AND TOILET SHROUD NP used on 001D, 001F, 001L, 001S, 001V SEE 25-41-51-12C FOR DET		001

- ITEM NOT ILLUSTRATED

FIG. ITEM	PART NUMBER	AIRLINE STOCK NUMBER	NOMENCLATURE 1234567		EFF CODE	UNITS PER ASSY
-080D	D2549020605471		. . TOILET UNIT AND TOILET SHROUD used on 001J SEE 25-41-51-12D FOR DET	NP		001
-080E	D2549020513071		. . TOILET UNIT AND TOILET SHROUD used on 001K, 001Q SEE 25-41-51-12D FOR DET	NP		001
-080F	D2549010607071		. . TOILET UNIT AND TOILET SHROUD used on 001N SEE 25-41-51-12D FOR DET	NP		001
090A	D2549030606072		. . PAN-FLOOR used on 001A, 001U SEE 25-41-51-13E FOR DET	NP		001
-090B	D2549020806472		. . PAN-FLOOR used on 001B SEE 25-41-51-13L FOR DET	NP		001
-090C	D2549030603072		. . PAN-FLOOR used on 001C SEE 25-41-51-13E FOR DET	NP		001
-090D	D2549020713672		. . PAN-FLOOR used on 001D, 001F, 001S SEE 25-41-51-13E FOR DET	NP		001
-090E	D2549030604272		. . PAN-FLOOR used on 001E SEE 25-41-51-13E FOR DET	NP		001
-090F	D2549020509672		. . PAN-FLOOR used on 001G, 001T SEE 25-41-51-13E FOR DET	NP		001

- ITEM NOT ILLUSTRATED

FIG. ITEM	PART NUMBER	AIRLINE STOCK NUMBER	NOMENCLATURE 1234567	EFF CODE	UNITS PER ASSY
-090G	D2549010606872		. . PAN-FLOOR NP used on 001M, 001N SEE 25-41-51-13G FOR DET		001
-090H	D2549020702272		. . PAN-FLOOR NP used on 001H, 001J, 001K, 001Q SEE 25-41-51-13D FOR DET		001
-090J	D2549020604872		. . PAN-FLOOR NP used on 001L, 001V SEE 25-41-51-13C FOR DET		001
-090K	D2549020701072		. . PAN-FLOOR NP POST SB 25-1289 used on 001P SEE 25-41-51-13V FOR DET		001
-090L	D2549010514272		. . PAN-FLOOR NP used on 001R SEE 25-41-51-13T FOR DET		001
100A	D2549010512673		. . LIGHT-DOOR NP used on 001A, 001D, 001E, 001F, 001G, 001H, 001J, 001K, 001L, 001M, 001N, 001P, 001Q, 001R, 001S, 001T, 001U, 001V SEE 25-41-51-140 FOR DET		001
-100B	D2549020710073		. . LIGHT-DOOR NP used on 001B SEE 25-41-51-14A FOR DET		001
-100C	D2549010600273		. . LIGHT-DOOR NP used on 001C SEE 25-41-51-14A FOR DET		001
110A	D2549020706274		. . WASHBASIN UNIT NP used on 001A, 001C, 001E, 001M, 001N, 001P, 001R, 001U SEE 25-41-51-15C FOR DET		001

- ITEM NOT ILLUSTRATED

FIG. ITEM	PART NUMBER	AIRLINE STOCK NUMBER	NOMENCLATURE 1234567		EFF CODE	UNITS PER ASSY
-110B	D2549030506074		. . WASHBASIN UNIT used on 001B, 001J, 001K, 001Q SEE 25-41-51-15C FOR DET	NP		001
-110C	D2549020704674		. . WASHBASIN UNIT used on 001D, 001F, 001H, 001S SEE 25-41-51-15G FOR DET	NP		001
-110D	D2549030509874		. . WASHBASIN UNIT used on 001G, 001T SEE 25-41-51-15G FOR DET	NP		001
-110E	D2549030514674		. . WASHBASIN UNIT used on 001L, 001V SEE 25-41-51-15G FOR DET	NP		001
120A	D2549020607075		. . DOOR ASSY-WASHBASIN UNIT used on 001C, 001E, 001G, 001H, 001M, 001N, 001P, 001T SEE 25-41-51-16B FOR DET	NP		001
-120B	D2549020710075		. . DOOR ASSY-WASHBASIN UNIT used on 001B SEE 25-41-51-16C FOR DET	NP		001
-120C	D2549020607675		. . DOOR ASSY-WASHBASIN UNIT used on 001D, 001F, 001L, 001S, 001V SEE 25-41-51-16C FOR DET	NP		001
-120D	D2549020605475		. . DOOR ASSY-WASHBASIN UNIT used on 001J, 001K, 001Q SEE 25-41-51-16C FOR DET	NP		001

- ITEM NOT ILLUSTRATED

FIG. ITEM	PART NUMBER	AIRLINE STOCK NUMBER	NOMENCLATURE 1234567		EFF CODE	UNITS PER ASSY
-120E	D2549030606075		. . DOOR ASSY-WASHBASIN UNIT used on 001A, 001R, 001U SEE 25-41-51-16E FOR DET	NP		001
130A	D2549030504876		. . PANEL ASSY-WASHBASIN UNIT used on 001A, 001C, 001E, 001G, 001H, 001M, 001N, 001P, 001R, 001T, 001U SEE 25-41-51-17C FOR DET	NP		001
-130B	D2549020710076		. . PANEL ASSY-WASHBASIN UNIT used on 001B SEE 25-41-51-17D FOR DET	NP		001
-130C	D2549020607676		. . PANEL ASSY-WASHBASIN UNIT used on 001D, 001F, 001L, 001S, 001V SEE 25-41-51-17C FOR DET	NP		001
-130D	D2549020605476		. . PANEL ASSY-WASHBASIN UNIT used on 001J, 001K, 001Q SEE 25-41-51-17D FOR DET	NP		001
140A	D2549030504877		. . BIN-WASTE,CHUTE-WASTE AND EXTINGUISHER-FIRE used on 001A, 001B, 001C, 001D, 001E, 001F, 001G, 001H, 001J, 001K, 001L, 001M, 001N, 001P, 001Q, 001R, 001S, 001T, 001U, 001V SEE 25-41-51-180 FOR DET	NP		001

- ITEM NOT ILLUSTRATED

FIG. ITEM	PART NUMBER	AIRLINE STOCK NUMBER	NOMENCLATURE 1234567	EFF CODE	UNITS PER ASSY
150A	D2549030504878		. . CABINET-SERVICE NP PRE VSB A2-254-25-020 PRE VSB A2-254-25-045 PRE VSB A2-254-25-080 used on 001A, 001D, 001F, 001G, 001J, 001K, 001L, 001Q, 001R, 001V SEE 25-41-51-19E FOR DET		001
-150B	D2549020710078		. . CABINET-SERVICE NP used on 001B SEE 25-41-51-19F FOR DET		001
-150C	D2549010513878		. . CABINET-SERVICE NP used on 001C SEE 25-41-51-19F FOR DET		001
-150D	D2549030504078		. . CABINET-SERVICE NP used on 001E, 001M, 001N, 001P SEE 25-41-51-19E FOR DET		001
-150E	D2549030505278		. . CABINET-SERVICE NP used on 001H SEE 25-41-51-19E FOR DET		001
-150F	R22540163900078		. . CABINET-SERVICE NP POST VSB A2-254-25-020 used on 001S SEE 25-41-51-19E FOR DET		001
-150G	R22540114500278		. . CABINET-SERVICE NP POST VSB A2-254-25-080 used on 001T SEE 25-41-51-19E FOR DET		001
-150H	R22540119900278		. . CABINET-SERVICE NP POST VSB A2-254-25-045 used on 001U SEE 25-41-51-19E FOR DET		001

- ITEM NOT ILLUSTRATED

FIG. ITEM	PART NUMBER	AIRLINE STOCK NUMBER	NOMENCLATURE 1234567	EFF CODE	UNITS PER ASSY
160A	D2549030606079		. . TABLE-NURSING NP used on 001A, 001R, 001U SEE 25-41-51-20A FOR DET		001
-160B	D2549020710079		. . TABLE-NURSING NP used on 001B SEE 25-41-51-20B FOR DET		001
-160C	D2549010600279		. . TABLE-NURSING NP used on 001C SEE 25-41-51-20A FOR DET		001
-160D	D2549010510679		. . TABLE-NURSING NP used on 001D, 001E, 001F, 001J, 001K, 001L, 001M, 001N, 001P, 001Q, 001S, 001V SEE 25-41-51-20A FOR DET		001
-160E	D2549020509679		. . TABLE-NURSING NP used on 001G, 001T SEE 25-41-51-20B FOR DET		001
-160F	D2549010512679		. . TABLE-NURSING NP used on 001H SEE 25-41-51-20A FOR DET		001
170A	D2549010514280		. . VENTILATION SYSTEM NP used on 001A, 001D, 001E, 001F, 001G, 001H, 001J, 001K, 001L, 001M, 001N, 001P, 001Q, 001R, 001S, 001T, 001U, 001V SEE 25-41-51-21A FOR DET		001
-170B	D2549020710080		. . VENTILATION SYSTEM NP used on 001B SEE 25-41-51-21A FOR DET		001
-170C	D2549030507680		. . VENTILATION SYSTEM NP used on 001C SEE 25-41-51-21A FOR DET		001

- ITEM NOT ILLUSTRATED

FIG. ITEM	PART NUMBER	AIRLINE STOCK NUMBER	NOMENCLATURE 1234567	EFF CODE	UNITS PER ASSY
180A	D2549010606081		. . WATER SYSTEM-POTABLE NP used on 001A, 001B, 001C, 001D, 001F, 001G, 001H, 001J, 001K, 001L, 001Q, 001R, 001S, 001T, 001U SEE 25-41-51-22D FOR DET		001
-180B	D2549030608281		. . WATER SYSTEM-POTABLE NP used on 001E, 001M, 001N, 001P SEE 25-41-51-22G FOR DET		001
-180C	R22540161900081		. . WATER SYSTEM-POTABLE NP used on 001V SEE 25-41-51-22D FOR DET		001
190A	D2549010511082		. . WATER SYSTEM-WASTE NP used on 001A, 001C, 001G, 001L, 001R, 001T, 001U, 001V SEE 25-41-51-23B FOR DET		001
-190B	D2549030504882		. . WATER SYSTEM-WASTE NP used on 001B, 001D, 001F, 001H, 001J, 001K, 001Q, 001S SEE 25-41-51-23B FOR DET		001
-190C	D2549020507282		. . WATER SYSTEM-WASTE NP used on 001E, 001M, 001N, 001P SEE 25-41-51-23B FOR DET		001
200A	D2549020710683		. . ELECTRICAL SYSTEM NP used on 001A, 001C, 001D, 001E, 001F, 001H, 001J, 001L, 001M, 001P, 001R, 001S, 001U, 001V SEE 25-41-51-26K FOR DET		001
-200B	D2549020509683		. . ELECTRICAL SYSTEM NP used on 001G, 001T SEE 25-41-51-26K FOR DET		001

- ITEM NOT ILLUSTRATED

FIG. ITEM	PART NUMBER	AIRLINE STOCK NUMBER	NOMENCLATURE 1234567		EFF CODE	UNITS PER ASSY
-200C	D2549020513083		. . ELECTRICAL SYSTEM used on 001K, 001N SEE 25-41-51-26M FOR DET	NP		001
-200D	D2549020508283		. . ELECTRICAL SYSTEM used on 001B SEE 25-41-51-26K FOR DET	NP		001
-200E	D2549010607283		. . ELECTRICAL SYSTEM used on 001Q SEE 25-41-51-26M FOR DET	NP		001

- ITEM NOT ILLUSTRATED

THIS PAGE IS INTENTIONALLY LEFT BLANK

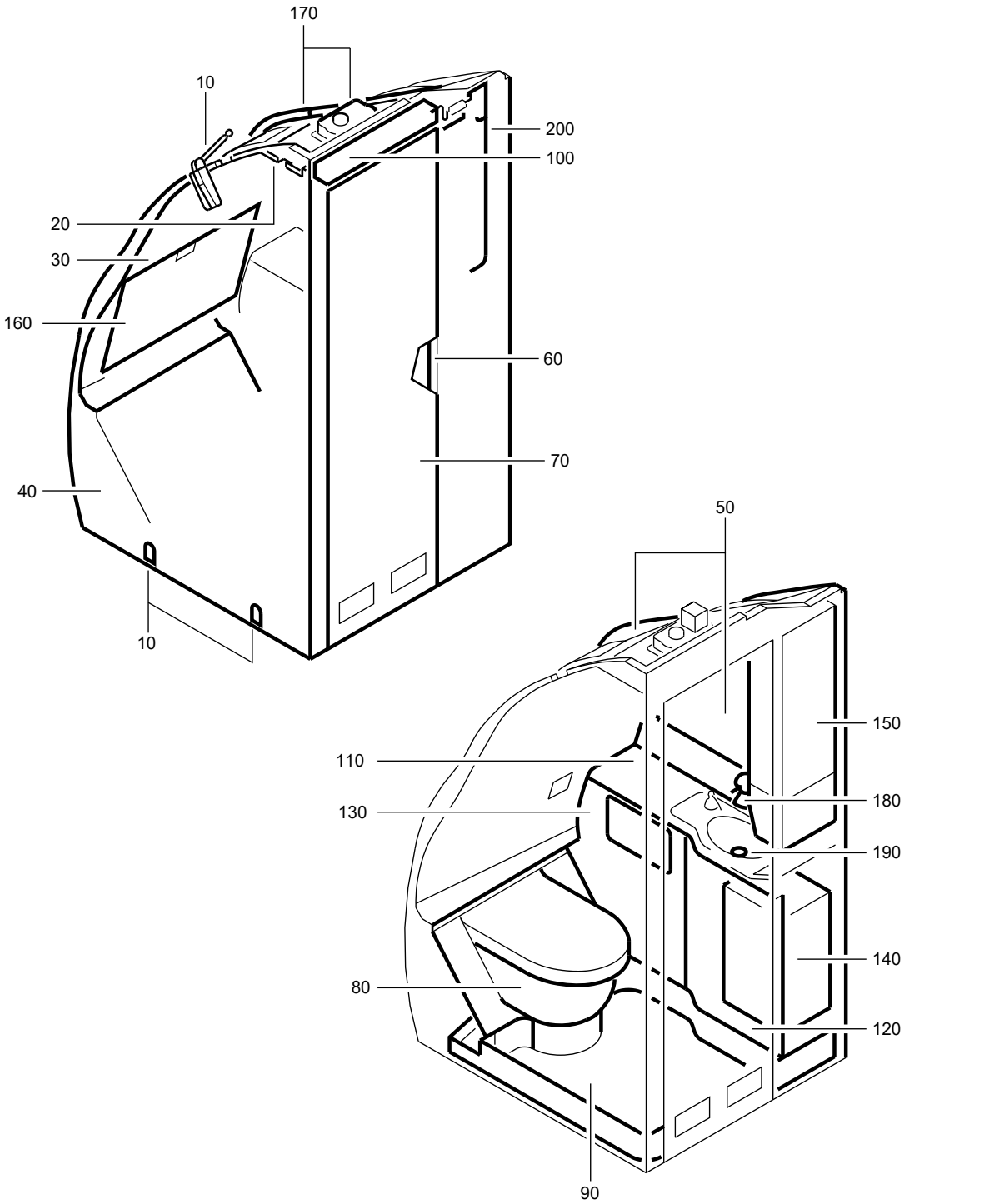

F_PL_254151_41_K_01_00

LAVATORY A ASSY
Figure 41K/EN254151SHEET41K01

FIG. ITEM	PART NUMBER	AIRLINE STOCK NUMBER	NOMENCLATURE 1234567	EFF CODE	UNITS PER ASSY
41K					
-001A	D2549030606600		. LAVATORY A ASSY SEE SIL 25-117 FOR DET		RF
-001B	D2549010605200		. LAVATORY A ASSY SEE SIL 25-117 FOR DET		RF
-001C	D2549020508000		. LAVATORY A ASSY SEE SIL 25-117 FOR DET		RF
-001D	D2549020713200		. LAVATORY A ASSY PRE VSB A2-254-25-042 PRE VSB A2-254-25-054 SEE SIL 25-117 FOR DET		RF
-001E	D2549030608600		. LAVATORY A ASSY SEE SIL 25-117 FOR DET		RF
-001F	D2549030609200		. LAVATORY A ASSY PRE VSB A2-254-25-080 SEE SIL 25-117 FOR DET		RF
-001G	D2549020508200		. LAVATORY A ASSY PRE VSB A2-254-25-046 SEE SIL 25-117 FOR DET		RF
-001H	D2549020510000		. LAVATORY A ASSY PRE VSB A2-254-25-083 SEE SIL 25-117 FOR DET		RF
-001J	D2549030503800		. LAVATORY A ASSY SEE SIL 25-117 FOR DET		RF
-001K	D2549030606800		. LAVATORY A ASSY PRE VSB A2-254-25-069 PRE VSB A2-254-25-070 SEE SIL 25-117 FOR DET		RF
-001L	D2549020502200		. LAVATORY A ASSY SEE SIL 25-117 FOR DET		RF

- ITEM NOT ILLUSTRATED

FIG. ITEM	PART NUMBER	AIRLINE STOCK NUMBER	NOMENCLATURE 1234567	EFF CODE	UNITS PER ASSY
-001M	D2549020511000		. LAVATORY A ASSY SEE SIL 25-117 FOR DET		RF
-001N	R225401196-002		. LAVATORY A ASSY PRE VSB A2-254-25-130 POST VSB A2-254-25-042 SEE SIL 25-117 FOR DET		RF
-001P	R225401196-034		. LAVATORY A ASSY POST VSB A2-254-25-054 SEE SIL 25-117 FOR DET		RF
-001Q	R225401172-014		. LAVATORY A ASSY POST VSB A2-254-25-080 SEE SIL 25-117 FOR DET		RF
-001R	R225401134-008		. LAVATORY A ASSY POST VSB A2-254-25-046		RF
-001S	R225401618-000		. LAVATORY A ASSY POST VSB A2-254-25-069		RF
-001T	R225401192-000		. LAVATORY A ASSY POST VSB A2-254-25-083		RF
-001U	R225401618-002		. LAVATORY A ASSY POST VSB A2-254-25-070		RF
-001V	R225401196-048		. LAVATORY A ASSY POST VSB A2-254-25-130 SEE SIL 25-117 FOR DET		RF
010A	D2549030514661		. . ATTACHMENT-LAVATORY NP used on 001A SEE 25-41-51-02A FOR DET		001

- ITEM NOT ILLUSTRATED

FIG. ITEM	PART NUMBER	AIRLINE STOCK NUMBER	NOMENCLATURE 1234567		EFF CODE	UNITS PER ASSY
-010B	D2549030514861		. . ATTACHMENT-LAVATORY PRE VSB A2-254-25-130 used on 001B, 001C, 001D, 001E, 001F, 001H, 001J, 001K, 001L, 001M, 001N, 001P, 001Q, 001S, 001T, 001U SEE 25-41-51-02A FOR DET	NP		001
-010C	D2549030607461		. . ATTACHMENT-LAVATORY used on 001G, 001R SEE 25-41-51-02B FOR DET	NP		001
-010D	R22540119604861		. . ATTACHMENT-LAVATORY POST VSB A2-254-25-130 used on 001V SEE 25-41-51-02A FOR DET	NP		001
020A	D2549020602663		. . PANEL-CEILING PRE VSB A2-254-25-130 used on 001A, 001B, 001C, 001D, 001E, 001F, 001H, 001J, 001K, 001L, 001M, 001N, 001P, 001Q, 001S, 001T, 001U SEE 25-41-51-040 FOR DET	NP		001
-020B	D2549020602863		. . PANEL-CEILING used on 001G, 001R SEE 25-41-51-040 FOR DET	NP		001
-020C	R22540119604663		. . PANEL-CEILING POST VSB A2-254-25-130 used on 001V SEE 25-41-51-040 FOR DET	NP		001
030A	D2549010512664		. . WALL-REAR PRE VSB A2-254-25-130 used on 001A, 001C, 001D, 001E, 001H, 001J, 001K, 001L, 001M, 001N, 001P, 001S, 001T, 001U SEE 25-41-51-05B FOR DET	NP		001

- ITEM NOT ILLUSTRATED

FIG. ITEM	PART NUMBER	AIRLINE STOCK NUMBER	NOMENCLATURE 1234567		EFF CODE	UNITS PER ASSY
-030B	D2549010514464		. . WALL-REAR used on 001B SEE 25-41-51-05B FOR DET	NP		001
-030C	D2549030609264		. . WALL-REAR used on 001F, 001Q SEE 25-41-51-05C FOR DET	NP		001
-030D	D2549020613664		. . WALL-REAR used on 001G, 001R SEE 25-41-51-05B FOR DET	NP		001
-030E	R22540119604664		. . WALL-REAR POST VSB A2-254-25-130 used on 001V SEE 25-41-51-05B FOR DET	NP		001
040A	D2549020700465		. . WALL-SIDE used on 001A SEE 25-41-51-06N FOR DET	NP		001
-040B	D2549010605265		. . WALL-SIDE used on 001B SEE 25-41-51-06T FOR DET	NP		001
-040C	D2549020701465		. . WALL-SIDE used on 001C SEE 25-41-51-06M FOR DET	NP		001
-040D	D2549020703465		. . WALL-SIDE PRE VSB A2-254-25-042 PRE VSB A2-254-25-054 used on 001D SEE 25-41-51-06P FOR DET	NP		001
-040E	D2549030510865		. . WALL-SIDE used on 001E SEE 25-41-51-06M FOR DET	NP		001

- ITEM NOT ILLUSTRATED

FIG. ITEM	PART NUMBER	AIRLINE STOCK NUMBER	NOMENCLATURE 1234567		EFF CODE	UNITS PER ASSY
-040F	D2549030509865		. . WALL-SIDE PRE VSB A2-254-25-080 used on 001F SEE 25-41-51-06N FOR DET	NP		001
-040G	D2549020613665		. . WALL-SIDE used on 001G, 001R SEE 25-41-51-06K FOR DET	NP		001
-040H	D2549020510065		. . WALL-SIDE used on 001H, 001T SEE 25-41-51-06U FOR DET	NP		001
-040J	D2549030503865		. . WALL-SIDE used on 001J SEE 25-41-51-06V FOR DET	NP		001
-040K	D2549030606865		. . WALL-SIDE used on 001K, 001S, 001U SEE 25-41-51-06U FOR DET	NP		001
-040L	D2549020710865		. . WALL-SIDE used on 001L, 001M SEE 25-41-51-06Q FOR DET	NP		001
-040M	R22540115200065		. . WALL-SIDE PRE VSB A2-254-25-130 POST VSB A2-254-25-042 used on 001N SEE 25-41-51-06P FOR DET	NP		001
-040N	R22540119603465		. . WALL-SIDE POST VSB A2-254-25-054 used on 001P SEE 25-41-51-06P FOR DET	NP		001
-040P	R22540117200665		. . WALL-SIDE POST VSB A2-254-25-080 used on 001Q SEE 25-41-51-06N FOR DET	NP		001

- ITEM NOT ILLUSTRATED

FIG. ITEM	PART NUMBER	AIRLINE STOCK NUMBER	NOMENCLATURE 1234567	EFF CODE	UNITS PER ASSY
-040Q	R22540119604665		. . WALL-SIDE NP POST VSB A2-254-25-130 used on 001V SEE 25-41-51-06P FOR DET		001
050A	D2549010606066		. . HOUSING NP used on 001A SEE 25-41-51-07G FOR DET		001
-050B	D2549010605266		. . HOUSING NP used on 001B SEE 25-41-51-07J FOR DET		001
-050C	D2549020701466		. . HOUSING NP used on 001C SEE 25-41-51-07F FOR DET		001
-050D	D2549030606066		. . HOUSING NP PRE VSB A2-254-25-130 used on 001D, 001K, 001N, 001P, 001S, 001U SEE 25-41-51-07G FOR DET		001
-050E	D2549030510866		. . HOUSING NP used on 001E SEE 25-41-51-07F FOR DET		001
-050F	D2549020607666		. . HOUSING NP used on 001F, 001Q SEE 25-41-51-07D FOR DET		001
-050G	D2549020605666		. . HOUSING NP used on 001G, 001R SEE 25-41-51-07D FOR DET		001
-050H	D2549020700466		. . HOUSING NP used on 001H, 001T SEE 25-41-51-07Y FOR DET		001

- ITEM NOT ILLUSTRATED

FIG. ITEM	PART NUMBER	AIRLINE STOCK NUMBER	NOMENCLATURE 1234567	EFF CODE	UNITS PER ASSY
-050J	D2549030503866		. . HOUSING NP used on 001J SEE 25-41-51-07J FOR DET		001
-050K	D2549010606666		. . HOUSING NP used on 001L, 001M SEE 25-41-51-07J FOR DET		001
-050L	R22540119604666		. . HOUSING NP POST VSB A2-254-25-130 used on 001V SEE 25-41-51-07G FOR DET		001
060A	D2549010500069		. . DOOR INSTL NP used on 001A, 001B, 001C, 001D, 001E, 001F, 001G, 001J, 001K, 001L, 001M, 001N, 001P, 001Q, 001R, 001S, 001U, 001V SEE 25-41-51-100 FOR DET		001
-060B	D2549020401269		. . DOOR INSTL NP used on 001H, 001T SEE 25-41-51-10A FOR DET		001
070A	A225400276-942		. . DOOR ASSY-SINGLE used on 001A SEE 25-41-51-11F FOR DET		001
-070B	A225400276-562		. . DOOR ASSY-SINGLE used on 001B SEE 25-41-51-11D FOR DET		001
-070C	A225400276-926		. . DOOR ASSY-SINGLE used on 001C SEE 25-41-51-11E FOR DET		001
-070D	A225400276-952		. . DOOR ASSY-SINGLE PRE VSB A2-254-25-130 used on 001D, 001N, 001P SEE 25-41-51-11G FOR DET		001

- ITEM NOT ILLUSTRATED

FIG. ITEM	PART NUMBER	AIRLINE STOCK NUMBER	NOMENCLATURE 1234567	EFF CODE	UNITS PER ASSY
-070E	A225400276-576		. . DOOR ASSY-SINGLE used on 001E SEE 25-41-51-11E FOR DET		001
-070F	A225400276-934		. . DOOR ASSY-SINGLE used on 001F, 001Q SEE 25-41-51-11F FOR DET		001
-070G	A225400276-570		. . DOOR ASSY-SINGLE used on 001G, 001R SEE 25-41-51-11E FOR DET		001
-070H	A225400276-594		. . DOOR ASSY-SINGLE used on 001J SEE 25-41-51-11G FOR DET		001
-070J	A225400276-964		. . DOOR ASSY-SINGLE used on 001K, 001S, 001U SEE 25-41-51-11J FOR DET		001
-070K	A225400278-502		. . DOOR ASSY-SINGLE used on 001L, 001M SEE 25-41-51-11H FOR DET		001
-070L	A2254002768942		. . DOOR ASSY-SINGLE used on 001A, 001H, 001T SEE 25-41-51-11N FOR DET		001
-070M	A225400263-990		. . DOOR ASSY-SINGLE POST VSB A2-254-25-130 used on 001V SEE 25-41-51-11G FOR DET		001
080A	D2549020607671		. . TOILET UNIT AND TOILET SHROUD NP used on 001A, 001C, 001H, 001L, 001T SEE 25-41-51-12C FOR DET		001

- ITEM NOT ILLUSTRATED

FIG. ITEM	PART NUMBER	AIRLINE STOCK NUMBER	NOMENCLATURE 1234567		EFF CODE	UNITS PER ASSY
-080B	D2549030506271		. . TOILET UNIT AND TOILET SHROUD used on 001B SEE 25-41-51-12C FOR DET	NP		001
-080C	D2549020604271		. . TOILET UNIT AND TOILET SHROUD PRE VSB A2-254-25-130 used on 001D, 001E, 001F, 001J, 001K, 001N, 001P, 001Q, 001S, 001U SEE 25-41-51-12C FOR DET	NP		001
-080D	D2549020506271		. . TOILET UNIT AND TOILET SHROUD used on 001G, 001R SEE 25-41-51-12C FOR DET	NP		001
-080E	D2549020514671		. . TOILET UNIT AND TOILET SHROUD used on 001M SEE 25-41-51-12E FOR DET	NP		001
-080F	R22540119604671		. . TOILET UNIT AND TOILET SHROUD POST VSB A2-254-25-130 used on 001V SEE 25-41-51-12C FOR DET	NP		001
090A	D2549020604872		. . PAN-FLOOR used on 001A SEE 25-41-51-13C FOR DET	NP		001
-090B	D2549010605272		. . PAN-FLOOR used on 001B SEE 25-41-51-13E FOR DET	NP		001
-090C	D2549020610672		. . PAN-FLOOR used on 001C SEE 25-41-51-13C FOR DET	NP		001

- ITEM NOT ILLUSTRATED

FIG. ITEM	PART NUMBER	AIRLINE STOCK NUMBER	NOMENCLATURE 1234567	EFF CODE	UNITS PER ASSY
-090D	D2549020704272		. . PAN-FLOOR NP PRE VSB A2-254-25-130 used on 001D, 001N, 001P SEE 25-41-51-13D FOR DET		001
-090E	D2549020702272		. . PAN-FLOOR NP used on 001E, 001K, 001S, 001U SEE 25-41-51-13D FOR DET		001
-090F	D2549030507072		. . PAN-FLOOR NP used on 001F, 001Q SEE 25-41-51-13C FOR DET		001
-090G	D2549020605672		. . PAN-FLOOR NP used on 001G, 001R SEE 25-41-51-13B FOR DET		001
-090H	D2549030503872		. . PAN-FLOOR NP used on 001J SEE 25-41-51-13G FOR DET		001
-090J	D2549020511072		. . PAN-FLOOR NP used on 001M SEE 25-41-51-13H FOR DET		001
-090K	D2549020710872		. . PAN-FLOOR NP used on 001L SEE 25-41-51-13E FOR DET		001
-090L	D2549020700472		. . PAN-FLOOR NP used on 001H, 001T SEE 25-41-51-13V FOR DET		001
-090M	R22540119604672		. . PAN-FLOOR NP POST VSB A2-254-25-130 used on 001V SEE 25-41-51-13D FOR DET		001

- ITEM NOT ILLUSTRATED

FIG. ITEM	PART NUMBER	AIRLINE STOCK NUMBER	NOMENCLATURE 1234567		EFF CODE	UNITS PER ASSY
100A	D2549010512673		. . LIGHT-DOOR PRE VSB A2-254-25-130 used on 001A, 001B, 001C, 001D, 001E, 001F, 001H, 001J, 001K, 001L, 001M, 001N, 001P, 001Q, 001S, 001T, 001U SEE 25-41-51-140 FOR DET	NP		001
-100B	D2549020613673		. . LIGHT-DOOR used on 001G, 001R SEE 25-41-51-140 FOR DET	NP		001
-100C	R22540119604673		. . LIGHT-DOOR POST VSB A2-254-25-130 used on 001V SEE 25-41-51-14C FOR DET	NP		001
110A	D2549020706274		. . WASHBASIN UNIT used on 001A, 001K, 001S, 001U SEE 25-41-51-15C FOR DET	NP		001
-110B	D2549030605874		. . WASHBASIN UNIT used on 001B SEE 25-41-51-15J FOR DET	NP		001
-110C	D2549020706674		. . WASHBASIN UNIT used on 001C SEE 25-41-51-15D FOR DET	NP		001
-110D	D2549030514674		. . WASHBASIN UNIT PRE VSB A2-254-25-130 used on 001D, 001H, 001N, 001P, 001T SEE 25-41-51-15G FOR DET	NP		001
-110E	D2549020710274		. . WASHBASIN UNIT used on 001E SEE 25-41-51-15H FOR DET	NP		001

- ITEM NOT ILLUSTRATED

FIG. ITEM	PART NUMBER	AIRLINE STOCK NUMBER	NOMENCLATURE 1234567	EFF CODE	UNITS PER ASSY
-110F	D2549030509874		. . WASHBASIN UNIT NP used on 001F, 001Q SEE 25-41-51-15G FOR DET		001
-110G	D2549020613674		. . WASHBASIN UNIT NP used on 001G, 001R SEE 25-41-51-15F FOR DET		001
-110H	D2549030503874		. . WASHBASIN UNIT NP used on 001J SEE 25-41-51-15H FOR DET		001
-110J	D2549030506074		. . WASHBASIN UNIT NP used on 001L, 001M SEE 25-41-51-15C FOR DET		001
-110K	R22540119604674		. . WASHBASIN UNIT NP POST VSB A2-254-25-130 used on 001V SEE 25-41-51-15G FOR DET		001
120A	D2549020607675		. . DOOR ASSY-WASHBASIN UNIT NP used on 001A, 001C, 001H, 001L, 001M, 001T SEE 25-41-51-16C FOR DET		001
-120B	D2549030506275		. . DOOR ASSY-WASHBASIN UNIT NP used on 001B SEE 25-41-51-16C FOR DET		001
-120C	D2549030505475		. . DOOR ASSY-WASHBASIN UNIT NP PRE VSB A2-254-25-130 used on 001D, 001G, 001N, 001P, 001R SEE 25-41-51-16B FOR DET		001

- ITEM NOT ILLUSTRATED

FIG. ITEM	PART NUMBER	AIRLINE STOCK NUMBER	NOMENCLATURE 1234567		EFF CODE	UNITS PER ASSY
-120D	D2549020607075		. . DOOR ASSY-WASHBASIN UNIT used on 001E, 001F, 001J, 001K, 001Q, 001S, 001U SEE 25-41-51-16B FOR DET	NP		001
-120E	R22540119604675		. . DOOR ASSY-WASHBASIN UNIT POST VSB A2-254-25-130 used on 001V SEE 25-41-51-16B FOR DET	NP		001
130A	D2549020607676		. . PANEL ASSY-WASHBASIN UNIT used on 001A, 001C, 001H, 001L, 001M, 001T SEE 25-41-51-17C FOR DET	NP		001
-130B	D2549030506276		. . PANEL ASSY-WASHBASIN UNIT used on 001B SEE 25-41-51-17C FOR DET	NP		001
-130C	D2549030504876		. . PANEL ASSY-WASHBASIN UNIT PRE VSB A2-254-25-130 used on 001D, 001E, 001F, 001J, 001K, 001N, 001P, 001Q, 001S, 001U SEE 25-41-51-17C FOR DET	NP		001
-130D	D2549020506276		. . PANEL ASSY-WASHBASIN UNIT used on 001G, 001R SEE 25-41-51-17C FOR DET	NP		001
-130E	R22540119604676		. . PANEL ASSY-WASHBASIN UNIT POST VSB A2-254-25-130 used on 001V SEE 25-41-51-17C FOR DET	NP		001

- ITEM NOT ILLUSTRATED

FIG. ITEM	PART NUMBER	AIRLINE STOCK NUMBER	NOMENCLATURE 1234567		EFF CODE	UNITS PER ASSY
140A	D2549030504877		. . BIN-WASTE,CHUTE-WASTE AND EXTINGUISHER-FIRE used on 001A, 001B, 001C, 001D, 001E, 001F, 001G, 001H, 001J, 001K, 001L, 001M, 001N, 001P, 001Q, 001R, 001S, 001T, 001U, 001V SEE 25-41-51-180 FOR DET	NP		001
150A	D2549030504878		. . CABINET-SERVICE PRE VSB A2-254-25-042 PRE VSB A2-254-25-054 PRE VSB A2-254-25-080 used on 001A, 001B, 001C, 001D, 001E, 001F, 001H, 001J, 001K, 001L, 001M, 001S, 001T, 001U SEE 25-41-51-19E FOR DET	NP		001
-150B	D2549020605678		. . CABINET-SERVICE used on 001G, 001R SEE 25-41-51-19E FOR DET	NP		001
-150C	R22540114200078		. . CABINET-SERVICE PRE VSB A2-254-25-130 POST VSB A2-254-25-042 used on 001N SEE 25-41-51-19E FOR DET	NP		001
-150D	R22540119500078		. . CABINET-SERVICE POST VSB A2-254-25-054 used on 001P SEE 25-41-51-19E FOR DET	NP		001
-150E	R22540114500278		. . CABINET-SERVICE POST VSB A2-254-25-080 used on 001Q SEE 25-41-51-19E FOR DET	NP		001

- ITEM NOT ILLUSTRATED

FIG. ITEM	PART NUMBER	AIRLINE STOCK NUMBER	NOMENCLATURE 1234567		EFF CODE	UNITS PER ASSY
-150F	R22540119604678		. . CABINET-SERVICE POST VSB A2-254-25-130 used on 001V SEE 25-41-51-19E FOR DET	NP		001
160A	D2549010510679		. . TABLE-NURSING used on 001A, 001C, 001E, 001F, 001H, 001J, 001K, 001L, 001M, 001Q, 001S, 001T, 001U SEE 25-41-51-20A FOR DET	NP		001
-160B	D2549010512679		. . TABLE-NURSING PRE VSB A2-254-25-130 used on 001B, 001D, 001N, 001P SEE 25-41-51-20A FOR DET	NP		001
-160C	D2549020613679		. . TABLE-NURSING used on 001G, 001R SEE 25-41-51-20A FOR DET	NP		001
-160D	R22540119604679		. . TABLE-NURSING POST VSB A2-254-25-130 used on 001V SEE 25-41-51-20A FOR DET	NP		001
170A	D2549010514280		. . VENTILATION SYSTEM PRE VSB A2-254-25-130 used on 001A, 001B, 001C, 001D, 001E, 001F, 001H, 001J, 001K, 001L, 001M, 001N, 001P, 001Q, 001S, 001T, 001U SEE 25-41-51-21A FOR DET	NP		001
-170B	D2549020507080		. . VENTILATION SYSTEM used on 001G, 001R SEE 25-41-51-21A FOR DET	NP		001
-170C	R22540119604680		. . VENTILATION SYSTEM POST VSB A2-254-25-130 used on 001V SEE 25-41-51-21A FOR DET	NP		001

- ITEM NOT ILLUSTRATED

FIG. ITEM	PART NUMBER	AIRLINE STOCK NUMBER	NOMENCLATURE 1234567	EFF CODE	UNITS PER ASSY
180A	D2549010606081		. . WATER SYSTEM-POTABLE NP used on 001A, 001B, 001C, 001D, 001E, 001F, 001H, 001J, 001L, 001M, 001N, 001P, 001Q, 001T SEE 25-41-51-22D FOR DET		001
-180B	D2549030607081		. . WATER SYSTEM-POTABLE NP used on 001G, 001R SEE 25-41-51-22D FOR DET		001
-180C	D2549030608281		. . WATER SYSTEM-POTABLE NP used on 001K, 001S, 001U SEE 25-41-51-22G FOR DET		001
-180D	R22540161900081		. . WATER SYSTEM-POTABLE NP used on 001V SEE 25-41-51-22D FOR DET		001
190A	D2549010511082		. . WATER SYSTEM-WASTE NP used on 001A, 001C, 001D, 001E, 001F, 001H, 001J, 001N, 001P, 001Q, 001T, 001V SEE 25-41-51-23B FOR DET		001
-190B	D2549030504882		. . WATER SYSTEM-WASTE NP used on 001B, 001L, 001M SEE 25-41-51-23B FOR DET		001
-190C	D2549030506082		. . WATER SYSTEM-WASTE NP used on 001G, 001R SEE 25-41-51-23B FOR DET		001
-190D	D2549020507282		. . WATER SYSTEM-WASTE NP used on 001K, 001S, 001U SEE 25-41-51-23B FOR DET		001

- ITEM NOT ILLUSTRATED

FIG. ITEM	PART NUMBER	AIRLINE STOCK NUMBER	NOMENCLATURE 1234567		EFF CODE	UNITS PER ASSY
200A	D2549020710683		. . ELECTRICAL SYSTEM PRE VSB A2-254-25-130 used on 001A, 001B, 001C, 001D, 001E, 001H, 001J, 001K, 001L, 001N, 001P, 001S, 001T, 001U SEE 25-41-51-26K FOR DET	NP		001
-200B	D2549020509683		. . ELECTRICAL SYSTEM used on 001F, 001Q SEE 25-41-51-26K FOR DET	NP		001
-200C	D2549020513083		. . ELECTRICAL SYSTEM used on 001M SEE 25-41-51-26M FOR DET	NP		001
-200D	D2549020508283		. . ELECTRICAL SYSTEM used on 001G, 001R SEE 25-41-51-26K FOR DET	NP		001
-200E	R22540119604883		. . ELECTRICAL SYSTEM POST VSB A2-254-25-130 used on 001V SEE 25-41-51-26K FOR DET	NP		001

- ITEM NOT ILLUSTRATED

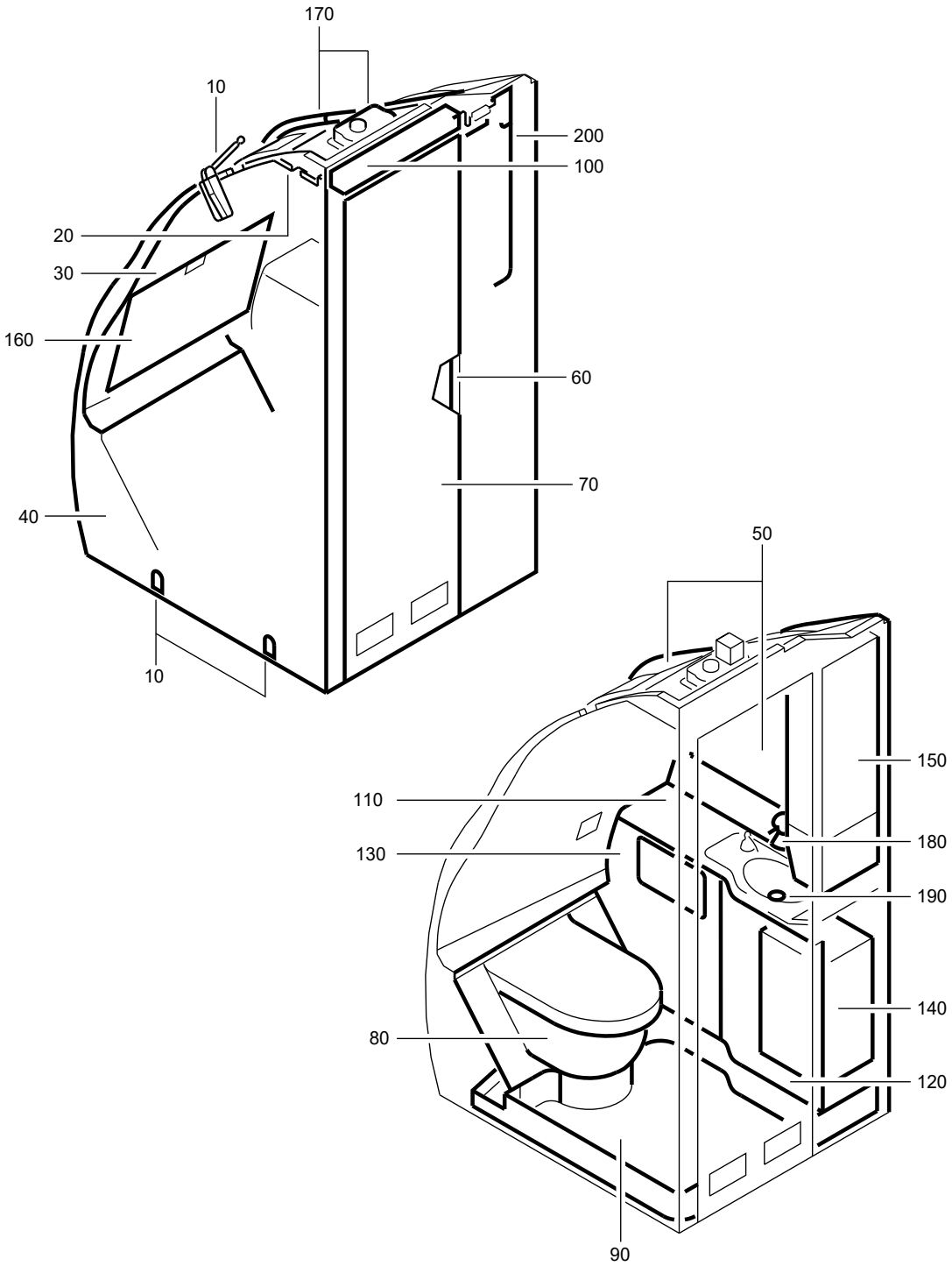

F_PL_254151_41_L_01_00

LAVATORY A ASSY
Figure 41L/EN254151SHEET41L01

FIG. ITEM	PART NUMBER	AIRLINE STOCK NUMBER	NOMENCLATURE 1234567	EFF CODE	UNITS PER ASSY
41L					
-001A	D2549020514200		. LAVATORY A ASSY SEE SIL 25-117 FOR DET		RF
-001B	D2549020514600		. LAVATORY A ASSY PRE VSB A2-254-25-154 SEE SIL 25-117 FOR DET		RF
-001C	D2549010608400		. LAVATORY A ASSY SEE SIL 25-117 FOR DET		RF
-001D	D2549030609000		. LAVATORY A ASSY SEE SIL 25-117 FOR DET		RF
-001E	D2549020512200		. LAVATORY A ASSY SEE SIL 25-117 FOR DET		RF
-001F	D2549020505600		. LAVATORY A ASSY SEE SIL 25-117 FOR DET		RF
-001G	D2549030614200		. LAVATORY A ASSY SEE SIL 25-117 FOR DET		RF
-001H	D2549030614400		. LAVATORY A ASSY PRE VSB A2-254-25-070 SEE SIL 25-117 FOR DET		RF
-001J	D2549030611800		. LAVATORY A ASSY SEE SIL 25-117 FOR DET		RF
-001K	D2549030608000		. LAVATORY A ASSY PRE VSB A2-254-25-131 SEE SIL 25-117 FOR DET		RF
-001L	D2549030613400		. LAVATORY A ASSY SEE SIL 25-117 FOR DET		RF
-001M	D2549020802000		. LAVATORY A ASSY POST SB 25-1314 SEE SIL 25-117 FOR DET		RF

- ITEM NOT ILLUSTRATED

FIG. ITEM	PART NUMBER	AIRLINE STOCK NUMBER	NOMENCLATURE 1234567		EFF CODE	UNITS PER ASSY
-001N	R225401625-000		. LAVATORY A ASSY POST VSB A2-254-25-070			RF
-001P	R225401614-000		. LAVATORY A ASSY POST VSB A2-254-25-131			RF
-001Q	R225401619-002		. LAVATORY A ASSY POST VSB A2-254-25-154 SEE SIL 25-117 FOR DET			RF
010A	D2549030514861		. . ATTACHMENT-LAVATORY used on 001A, 001B, 001C, 001D, 001F, 001J, 001Q SEE 25-41-51-02A FOR DET	NP		001
-010B	D2549030603061		. . ATTACHMENT-LAVATORY used on 001G, 001H, 001N SEE 25-41-51-02A FOR DET	NP		001
-010C	D2549030608061		. . ATTACHMENT-LAVATORY used on 001K, 001L, 001M, 001P SEE 25-41-51-02C FOR DET	NP		001
-010D	D2549020705861		. . ATTACHMENT-LAVATORY used on 001E SEE 25-41-51-02D FOR DET	NP		001
020A	D2549020602663		. . PANEL-CEILING used on 001A, 001B, 001C, 001D, 001E, 001F, 001J, 001K, 001L, 001M, 001P, 001Q SEE 25-41-51-040 FOR DET	NP		001
-020B	D2549010513863		. . PANEL-CEILING used on 001G, 001H, 001N SEE 25-41-51-040 FOR DET	NP		001
030A	D2549010512664		. . WALL-REAR used on 001A, 001B, 001D, 001E, 001F, 001J, 001Q SEE 25-41-51-05B FOR DET	NP		001

- ITEM NOT ILLUSTRATED

FIG. ITEM	PART NUMBER	AIRLINE STOCK NUMBER	NOMENCLATURE 1234567		EFF CODE	UNITS PER ASSY
-030B	D2549010514464		. . WALL-REAR used on 001C SEE 25-41-51-05B FOR DET	NP		001
-030C	D2549010600264		. . WALL-REAR used on 001G, 001H, 001N SEE 25-41-51-05D FOR DET	NP		001
-030D	D2549030608064		. . WALL-REAR used on 001K, 001P SEE 25-41-51-05C FOR DET	NP		001
-030E	D2549030613464		. . WALL-REAR used on 001L, 001M SEE 25-41-51-05C FOR DET	NP		001
040A	D2549020613265		. . WALL-SIDE used on 001A, 001B, 001Q SEE 25-41-51-06M FOR DET	NP		001
-040B	D2549010608465		. . WALL-SIDE used on 001C SEE 25-41-51-06V FOR DET	NP		001
-040C	D2549030600265		. . WALL-SIDE used on 001D SEE 25-41-51-06T FOR DET	NP		001
-040D	D2549010603665		. . WALL-SIDE used on 001E SEE 25-41-51-06Q FOR DET	NP		001
-040E	D2549020505665		. . WALL-SIDE used on 001F SEE 25-41-51-06U FOR DET	NP		001
-040F	D2549030614265		. . WALL-SIDE used on 001G, 001H, 001N SEE 25-41-51-06U FOR DET	NP		001

- ITEM NOT ILLUSTRATED

FIG. ITEM	PART NUMBER	AIRLINE STOCK NUMBER	NOMENCLATURE 1234567	EFF CODE	UNITS PER ASSY
-040G	D2549030611865		. . WALL-SIDE NP used on 001J SEE 25-41-51-06V FOR DET		001
-040H	D2549030608065		. . WALL-SIDE NP PRE VSB A2-254-25-131 used on 001K SEE 25-41-51-06U FOR DET		001
-040J	D2549030613465		. . WALL-SIDE NP used on 001L SEE 25-41-51-06U FOR DET		001
-040K	D2549010500065		. . WALL-SIDE NP used on 001M SEE 25-41-51-06A FOR DET		001
-040L	R22540161400065		. . WALL-SIDE NP POST VSB A2-254-25-131 used on 001P SEE 25-41-51-06U FOR DET		001
050A	D2549010606066		. . HOUSING NP used on 001A, 001B, 001Q SEE 25-41-51-07G FOR DET		001
-050B	D2549020509666		. . HOUSING NP used on 001C SEE 25-41-51-07J FOR DET		001
-050C	D2549030600266		. . HOUSING NP used on 001D SEE 25-41-51-07J FOR DET		001
-050D	D2549010603666		. . HOUSING NP used on 001E SEE 25-41-51-07G FOR DET		001
-050E	D2549020505666		. . HOUSING NP used on 001F SEE 25-41-51-07J FOR DET		001

- ITEM NOT ILLUSTRATED

FIG. ITEM	PART NUMBER	AIRLINE STOCK NUMBER	NOMENCLATURE 1234567		EFF CODE	UNITS PER ASSY
-050F	D2549030607266		. . HOUSING used on 001G, 001H, 001N SEE 25-41-51-07J FOR DET	NP		001
-050G	D2549010606666		. . HOUSING used on 001J SEE 25-41-51-07J FOR DET	NP		001
-050H	D2549030608066		. . HOUSING PRE VSB A2-254-25-131 used on 001K SEE 25-41-51-07K FOR DET	NP		001
-050J	D2549030613466		. . HOUSING used on 001L SEE 25-41-51-07K FOR DET	NP		001
-050K	D2549020802066		. . HOUSING used on 001M SEE 25-41-51-07L FOR DET	NP		001
-050L	R22540161400066		. . HOUSING POST VSB A2-254-25-131 used on 001P SEE 25-41-51-07K FOR DET	NP		001
060A	D2549010500069		. . DOOR INSTL used on 001A, 001B, 001C, 001D, 001E, 001F, 001G, 001H, 001J, 001K, 001L, 001N, 001P, 001Q SEE 25-41-51-100 FOR DET	NP		001
-060B	D2549020401269		. . DOOR INSTL used on 001M SEE 25-41-51-10A FOR DET	NP		001
070A	A225400276-968		. . DOOR ASSY-SINGLE used on 001A, 001B, 001Q SEE 25-41-51-11J FOR DET			001

- ITEM NOT ILLUSTRATED

FIG. ITEM	PART NUMBER	AIRLINE STOCK NUMBER	NOMENCLATURE 1234567	EFF CODE	UNITS PER ASSY
-070B	A225400276-942		. . DOOR ASSY-SINGLE used on 001C SEE 25-41-51-11F FOR DET		001
-070C	A225400276-848		. . DOOR ASSY-SINGLE used on 001D SEE 25-41-51-11J FOR DET		001
-070D	A225400276-596		. . DOOR ASSY-SINGLE used on 001E SEE 25-41-51-11G FOR DET		001
-070E	A225400278-514		. . DOOR ASSY-SINGLE used on 001F SEE 25-41-51-11H FOR DET		001
-070F	A225400276-670		. . DOOR ASSY-SINGLE used on 001G, 001H, 001N SEE 25-41-51-11J FOR DET		001
-070G	A225400278-804		. . DOOR ASSY-SINGLE used on 001J, 001L SEE 25-41-51-11H FOR DET		001
-070H	A225400278-800		. . DOOR ASSY-SINGLE PRE VSB A2-254-25-131 used on 001K SEE 25-41-51-11H FOR DET		001
-070J	A2254002768942		. . DOOR ASSY-SINGLE POST SB 25-1314 used on 001C, 001M SEE 25-41-51-11N FOR DET		001
-070K	A225400278-932		. . DOOR ASSY-SINGLE POST VSB A2-254-25-13 used on 001P SEE 25-41-51-11H FOR DET		001

- ITEM NOT ILLUSTRATED

FIG. ITEM	PART NUMBER	AIRLINE STOCK NUMBER	NOMENCLATURE 1234567		EFF CODE	UNITS PER ASSY
080A	D2549020607671		. . TOILET UNIT AND TOILET SHROUD used on 001A, 001C SEE 25-41-51-12C FOR DET	NP		001
-080B	D2549020604271		. . TOILET UNIT AND TOILET SHROUD used on 001G SEE 25-41-51-12C FOR DET	NP		001
-080C	D2549020514671		. . TOILET UNIT AND TOILET SHROUD used on 001B, 001J, 001L, 001M, 001Q SEE 25-41-51-12E FOR DET	NP		001
-080D	D2549020512271		. . TOILET UNIT AND TOILET SHROUD used on 001E SEE 25-41-51-12D FOR DET	NP		001
-080E	D2549010607071		. . TOILET UNIT AND TOILET SHROUD used on 001D, 001F, 001H, 001K, 001N, 001P SEE 25-41-51-12D FOR DET	NP		001
090A	D2549020604872		. . PAN-FLOOR used on 001A SEE 25-41-51-13C FOR DET	NP		001
-090B	D2549020708072		. . PAN-FLOOR used on 001C SEE 25-41-51-13G FOR DET	NP		001
-090C	D2549030604272		. . PAN-FLOOR used on 001D SEE 25-41-51-13E FOR DET	NP		001

- ITEM NOT ILLUSTRATED

FIG. ITEM	PART NUMBER	AIRLINE STOCK NUMBER	NOMENCLATURE 1234567	EFF CODE	UNITS PER ASSY
-090D	D2549020512272		. . PAN-FLOOR NP used on 001E SEE 25-41-51-13H FOR DET		001
-090E	D2549020514672		. . PAN-FLOOR NP used on 001B, 001G, 001H, 001J, 001L, 001N, 001Q SEE 25-41-51-13H FOR DET		001
-090F	D2549020505672		. . PAN-FLOOR NP used on 001F SEE 25-41-51-13H FOR DET		001
-090G	D2549010606872		. . PAN-FLOOR NP PRE VSB A2-254-25-131 used on 001K SEE 25-41-51-13G FOR DET		001
-090H	D2549010514272		. . PAN-FLOOR NP used on 001M SEE 25-41-51-13T FOR DET		001
-090J	R22540161400072		. . PAN-FLOOR NP POST VSB A2-254-25-131 used on 001P SEE 25-41-51-13G FOR DET		001
100A	D2549010512673		. . LIGHT-DOOR NP used on 001A, 001B, 001C, 001D, 001E, 001F, 001J, 001K, 001L, 001M, 001P, 001Q SEE 25-41-51-140 FOR DET		001
-100B	D2549010600273		. . LIGHT-DOOR NP used on 001G, 001H, 001N SEE 25-41-51-14A FOR DET		001

- ITEM NOT ILLUSTRATED

FIG. ITEM	PART NUMBER	AIRLINE STOCK NUMBER	NOMENCLATURE 1234567		EFF CODE	UNITS PER ASSY
110A	D2549020706274		. . WASHBASIN UNIT used on 001A, 001B, 001C, 001D, 001F, 001G, 001H, 001J, 001K, 001L, 001N, 001P, 001Q SEE 25-41-51-15C FOR DET	NP		001
-110B	D2549010603674		. . WASHBASIN UNIT used on 001E SEE 25-41-51-15C FOR DET	NP		001
-110C	D2549030514674		. . WASHBASIN UNIT used on 001M SEE 25-41-51-15G FOR DET	NP		001
120A	D2549020607675		. . DOOR ASSY-WASHBASIN UNIT used on 001A, 001B, 001C, 001J, 001L, 001M, 001Q SEE 25-41-51-16C FOR DET	NP		001
-120B	D2549020607075		. . DOOR ASSY-WASHBASIN UNIT used on 001D, 001F, 001G, 001H, 001K, 001N, 001P SEE 25-41-51-16B FOR DET	NP		001
-120C	D2549010603675		. . DOOR ASSY-WASHBASIN UNIT used on 001E SEE 25-41-51-16C FOR DET	NP		001
130A	D2549020607676		. . PANEL ASSY-WASHBASIN UNIT used on 001A, 001B, 001C, 001J, 001L, 001M, 001Q SEE 25-41-51-17C FOR DET	NP		001

- ITEM NOT ILLUSTRATED

FIG. ITEM	PART NUMBER	AIRLINE STOCK NUMBER	NOMENCLATURE 1234567		EFF CODE	UNITS PER ASSY
-130B	D2549030504876		. . PANEL ASSY-WASHBASIN UNIT used on 001D, 001F, 001G, 001H, 001K, 001P, 001N, 001P SEE 25-41-51-17C FOR DET	NP		001
-130C	D2549010603676		. . PANEL ASSY-WASHBASIN UNIT used on 001E SEE 25-41-51-17D FOR DET	NP		001
140A	D2549030504877		. . BIN-WASTE,CHUTE-WASTE AND EXTINGUISHER-FIRE used on 001A, 001B, 001C, 001D, 001E, 001F, 001G, 001H, 001J, 001K, 001L, 001M, 001N, 001P, 001Q SEE 25-41-51-180 FOR DET	NP		001
150A	D2549030504878		. . CABINET-SERVICE used on 001A, 001B, 001C, 001E, 001F, 001J, 001L, 001M, 001Q SEE 25-41-51-19E FOR DET	NP		001
-150B	D2549030504078		. . CABINET-SERVICE used on 001D, 001K, 001P SEE 25-41-51-19E FOR DET	NP		001
-150C	D2549010513878		. . CABINET-SERVICE used on 001G, 001H, 001N SEE 25-41-51-19F FOR DET	NP		001
160A	D2549010510679		. . TABLE-NURSING used on 001A, 001B, 001C, 001D, 001E, 001J, 001K, 001L, 001M, 001P, 001Q SEE 25-41-51-20A FOR DET	NP		001
-160B	D2549010512679		. . TABLE-NURSING used on 001F SEE 25-41-51-20A FOR DET	NP		001

- ITEM NOT ILLUSTRATED

FIG. ITEM	PART NUMBER	AIRLINE STOCK NUMBER	NOMENCLATURE 1234567		EFF CODE	UNITS PER ASSY
-160C	D2549010600279		. . TABLE-NURSING used on 001G, 001H, 001N SEE 25-41-51-20A FOR DET	NP		001
170A	D2549010514280		. . VENTILATION SYSTEM used on 001A, 001B, 001C, 001D, 001E, 001F, 001J, 001K, 001L, 001P, 001Q SEE 25-41-51-21A FOR DET	NP		001
-170B	D2549030507680		. . VENTILATION SYSTEM used on 001G, 001H, 001N SEE 25-41-51-21A FOR DET	NP		001
-170C	D2549020802680		. . VENTILATION SYSTEM used on 001M SEE 25-41-51-21B FOR DET	NP		001
180A	D2549010606081		. . WATER SYSTEM-POTABLE used on 001A, 001B, 001C, 001E, 001F, 001G, 001H, 001J, 001L, 001M, 001N SEE 25-41-51-22D FOR DET	NP		001
-180B	D2549030608281		. . WATER SYSTEM-POTABLE used on 001D, 001K, 001P SEE 25-41-51-22G FOR DET	NP		001
-180C	R22540161900081		. . WATER SYSTEM-POTABLE used on 001Q SEE 25-41-51-22D FOR DET	NP		001
190A	D2549010511082		. . WATER SYSTEM-WASTE used on 001A, 001B, 001C, 001E, 001F, 001G, 001H, 001J, 001L, 001M, 001N, 001Q SEE 25-41-51-23B FOR DET	NP		001
-190B	D2549020507282		. . WATER SYSTEM-WASTE used on 001D, 001K, 001P SEE 25-41-51-23B FOR DET	NP		001

- ITEM NOT ILLUSTRATED

FIG. ITEM	PART NUMBER	AIRLINE STOCK NUMBER	NOMENCLATURE 1234567		EFF CODE	UNITS PER ASSY
200A	D2549020710683		. . ELECTRICAL SYSTEM used on 001A, 001C, 001G SEE 25-41-51-26K FOR DET	NP		001
-200B	D2549020513083		. . ELECTRICAL SYSTEM used on 001B, 001D, 001E, 001F, 001H, 001J, 001K, 001L, 001M, 001N, 001P, 001Q SEE 25-41-51-26M FOR DET	NP		001

- ITEM NOT ILLUSTRATED

THIS PAGE IS INTENTIONALLY LEFT BLANK

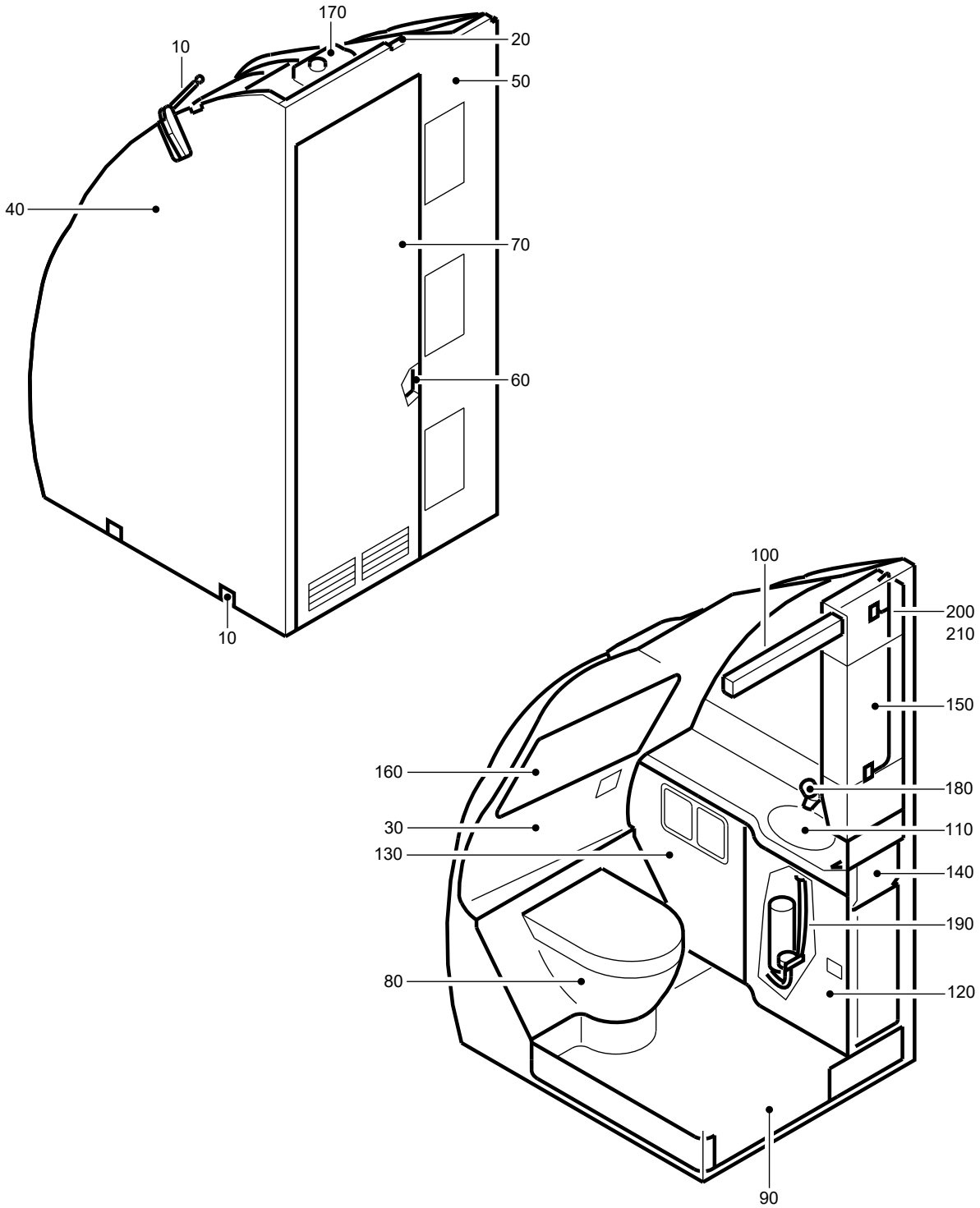

F_PL_254151_41_M_01_01

LAVATORY A ASSY
Figure 41M/EN254151SHEET41M01

FIG. ITEM	PART NUMBER	AIRLINE STOCK NUMBER	NOMENCLATURE 1234567	EFF CODE	UNITS PER ASSY
41M					
-001A	D2549010608200		. LAVATORY A ASSY SEE SIL 25-117 FOR DET		RF
-001B	D2549010607800		. LAVATORY A ASSY PRE VSB A2-254-25-047 SEE SIL 25-117 FOR DET		RF
-001C	D2549020512600		. LAVATORY A ASSY SEE SIL 25-117 FOR DET		RF
-001D	D2549030611600		. LAVATORY A ASSY PRE VSB A2-254-25-080 SEE SIL 25-117 FOR DET		RF
-001E	D2549030611400		. LAVATORY A ASSY SEE SIL 25-117 FOR DET		RF
-001F	D2549030611200		. LAVATORY A ASSY SEE SIL 25-117 FOR DET		RF
-001G	D2549010607200		. LAVATORY A ASSY PRE VSB A2-254-25-080 SEE SIL 25-117 FOR DET		RF
-001H	D2549030610600		. LAVATORY A ASSY PRE VSB A2-254-25-046 SEE SIL 25-117 FOR DET		RF
-001J	D2549030612800		. LAVATORY A ASSY PRE VSB A2-254-25-046 SEE SIL 25-117 FOR DET		RF
-001K	D2549030610200		. LAVATORY A ASSY SEE SIL 25-117 FOR DET		RF
-001L	D2549010607400		. LAVATORY A ASSY SEE SIL 25-117 FOR DET		RF

- ITEM NOT ILLUSTRATED

FIG. ITEM	PART NUMBER	AIRLINE STOCK NUMBER	NOMENCLATURE 1234567		EFF CODE	UNITS PER ASSY
-001M	D2549030610200		. LAVATORY A ASSY POST SB 25-1312 SEE SIL 25-117 FOR DET			RF
-001N	D2549030610200		. LAVATORY A ASSY			RF
-001P	R225401145-006		. LAVATORY A ASSY POST VSB A2-254-25-080 SEE SIL 25-117 FOR DET			RF
-001Q	R225401172-016		. LAVATORY A ASSY POST VSB A2-254-25-080 SEE SIL 25-117 FOR DET			RF
-001R	R225401134-026		. LAVATORY A ASSY POST VSB A2-254-25-046			RF
-001S	R225401134-028		. LAVATORY A ASSY POST VSB A2-254-25-046			RF
-001T	R225401183-000		. LAVATORY A ASSY POST VSB A2-254-25-047			RF
010A	D2549030514861		. . ATTACHMENT-LAVATORY used on 001A, 001B, 001C, 001D, 001G, 001K, 001P, 001Q, 001T SEE 25-41-51-02A FOR DET	NP		001
-010B	D2549030607461		. . ATTACHMENT-LAVATORY used on 001F, 001H, 001R SEE 25-41-51-02B FOR DET	NP		001
-010C	D2549030612861		. . ATTACHMENT-LAVATORY used on 001J, 001S SEE 25-41-51-02C FOR DET	NP		001
-010D	D2549030608261		. . ATTACHMENT-LAVATORY used on 001L SEE 25-41-51-02B FOR DET	NP		001

- ITEM NOT ILLUSTRATED

FIG. ITEM	PART NUMBER	AIRLINE STOCK NUMBER	NOMENCLATURE 1234567		EFF CODE	UNITS PER ASSY
-010E	D2549020705861		. . ATTACHMENT-LAVATORY used on 001E, 001M SEE 25-41-51-02D FOR DET	NP		001
-010F	D2547161202861		. . ATTACHMENT-LAVATORY used on 001N	NP		001
020A	D2549020602663		. . PANEL-CEILING used on 001A, 001B, 001C, 001D, 001E, 001G, 001K, 001M, 001P, 001Q, 001T SEE 25-41-51-040 FOR DET	NP		001
-020B	D2549020602863		. . PANEL-CEILING used on 001F, 001H, 001J, 001R, 001S SEE 25-41-51-040 FOR DET	NP		001
-020C	D2549030506063		. . PANEL-CEILING used on 001L SEE 25-41-51-040 FOR DET	NP		001
-020D	D2549030409663		. . PANEL-CEILING used on 001N SEE 25-41-51-04A FOR DET	NP		001
030A	D2549010512664		. . WALL-REAR used on 001A, 001C, 001E, 001K SEE 25-41-51-05B FOR DET	NP		001
-030B	D2549020614864		. . WALL-REAR used on 001B, 001M, 001T SEE 25-41-51-05D FOR DET	NP		001
-030C	D2549030609264		. . WALL-REAR used on 001D, 001Q SEE 25-41-51-05C FOR DET	NP		001
-030D	D2549030509464		. . WALL-REAR used on 001F SEE 25-41-51-05D FOR DET	NP		001

- ITEM NOT ILLUSTRATED

FIG. ITEM	PART NUMBER	AIRLINE STOCK NUMBER	NOMENCLATURE 1234567		EFF CODE	UNITS PER ASSY
-030E	D2549010514464		. . WALL-REAR used on 001G, 001P SEE 25-41-51-05B FOR DET	NP		001
-030F	D2549020613664		. . WALL-REAR used on 001H, 001R SEE 25-41-51-05B FOR DET	NP		001
-030G	D2549030612864		. . WALL-REAR used on 001J, 001S SEE 25-41-51-05C FOR DET	NP		001
-030H	D2549030601464		. . WALL-REAR used on 001L SEE 25-41-51-05C FOR DET	NP		001
-030J	D2547161202864		. . WALL-REAR used on 001N SEE 25-41-51-05F FOR DET	NP		001
040A	D2549010608265		. . WALL-SIDE used on 001A SEE 25-41-51-06V FOR DET	NP		001
-040B	D2549010601265		. . WALL-SIDE used on 001B, 001T SEE 25-41-51-06M FOR DET	NP		001
-040C	D2549020701465		. . WALL-SIDE used on 001C SEE 25-41-51-06M FOR DET	NP		001
-040D	D2549030509865		. . WALL-SIDE PRE VSB A2-254-25-080 used on 001D SEE 25-41-51-06N FOR DET	NP		001
-040E	D2549020614465		. . WALL-SIDE used on 001E SEE 25-41-51-06L FOR DET	NP		001

- ITEM NOT ILLUSTRATED

FIG. ITEM	PART NUMBER	AIRLINE STOCK NUMBER	NOMENCLATURE 1234567		EFF CODE	UNITS PER ASSY
-040F	D2549030513865		. . WALL-SIDE used on 001F SEE 25-41-51-06P FOR DET	NP		001
-040G	D2549010514665		. . WALL-SIDE PRE VSB A2-254-25-080 used on 001G SEE 25-41-51-06N FOR DET	NP		001
-040H	D2549020613665		. . WALL-SIDE used on 001H, 001R SEE 25-41-51-06K FOR DET	NP		001
-040J	D2549030612865		. . WALL-SIDE used on 001J, 001S SEE 25-41-51-06U FOR DET	NP		001
-040K	D2549030514665		. . WALL-SIDE used on 001K SEE 25-41-51-06P FOR DET	NP		001
-040L	D2549030601465		. . WALL-SIDE used on 001L SEE 25-41-51-06Q FOR DET	NP		001
-040M	D2549030610265		. . WALL-SIDE POST SB 25-1325 used on 001M SEE 25-41-51-06T FOR DET	NP		001
-040N	D2547161202865		. . WALL-SIDE used on 001N	NP		001
-040P	R22540114500265		. . WALL-SIDE POST VSB A2-254-25-080 used on 001P SEE 25-41-51-06N FOR DET	NP		001

- ITEM NOT ILLUSTRATED

FIG. ITEM	PART NUMBER	AIRLINE STOCK NUMBER	NOMENCLATURE 1234567	EFF CODE	UNITS PER ASSY
-040Q	R22540117200665		. . WALL-SIDE NP POST VSB A2-254-25-080 used on 001Q SEE 25-41-51-06N FOR DET		001
050A	D2549010606066		. . HOUSING NP used on 001A SEE 25-41-51-07G FOR DET		001
-050B	D2549010601266		. . HOUSING NP used on 001B, 001T SEE 25-41-51-07F FOR DET		001
-050C	D2549020701466		. . HOUSING NP used on 001C SEE 25-41-51-07F FOR DET		001
-050D	D2549030610266		. . HOUSING NP POST SB 25-1325 used on 001M SEE 25-41-51-07F FOR DET		001
-050E	D2549030611466		. . HOUSING NP used on 001E SEE 25-41-51-07K FOR DET		001
-050F	D2549030611266		. . HOUSING NP used on 001F SEE 25-41-51-07K FOR DET		001
-050G	D2549010607266		. . HOUSING NP used on 001D, 001G, 001P, 001Q SEE 25-41-51-07K FOR DET		001
-050H	D2549030610666		. . HOUSING NP used on 001H, 001R SEE 25-41-51-07K FOR DET		001
-050J	D2549030612866		. . HOUSING NP used on 001J, 001S SEE 25-41-51-07K FOR DET		001

- ITEM NOT ILLUSTRATED

FIG. ITEM	PART NUMBER	AIRLINE STOCK NUMBER	NOMENCLATURE 1234567		EFF CODE	UNITS PER ASSY
-050K	D2549030510666		. . HOUSING used on 001K SEE 25-41-51-07F FOR DET	NP		001
-050L	D2549030506066		. . HOUSING used on 001L SEE 25-41-51-07C FOR DET	NP		001
-050M	D2547161202866		. . HOUSING used on 001N	NP		001
060A	D2549010500069		. . DOOR INSTL used on 001A, 001B, 001C, 001D, 001E, 001F, 001G, 001H, 001J, 001K, 001M, 001N, 001P, 001Q, 001R, 001S, 001T SEE 25-41-51-100 FOR DET	NP		001
-060B	D2549020401269		. . DOOR INSTL POST SB 25-1314 used on 001L SEE 25-41-51-10A FOR DET	NP		001
070A	A225400278-802		. . DOOR ASSY-SINGLE used on 001A SEE 25-41-51-11H FOR DET			001
-070B	A225400276-924		. . DOOR ASSY-SINGLE used on 001B, 001T SEE 25-41-51-11E FOR DET			001
-070C	A225400276-926		. . DOOR ASSY-SINGLE used on 001C SEE 25-41-51-11E FOR DET			001
-070D	A225400276-934		. . DOOR ASSY-SINGLE used on 001D, 001Q SEE 25-41-51-11F FOR DET			001

- ITEM NOT ILLUSTRATED

FIG. ITEM	PART NUMBER	AIRLINE STOCK NUMBER	NOMENCLATURE 1234567	EFF CODE	UNITS PER ASSY
-070E	A225400276-588		. . DOOR ASSY-SINGLE used on 001E SEE 25-41-51-11F FOR DET		001
-070F	A225400276-590		. . DOOR ASSY-SINGLE used on 001F SEE 25-41-51-11E FOR DET		001
-070G	A225400276-592		. . DOOR ASSY-SINGLE used on 001G, 001P SEE 25-41-51-11E FOR DET		001
-070H	A225400276-570		. . DOOR ASSY-SINGLE used on 001H, 001J, 001R, 001S SEE 25-41-51-11E FOR DET		001
-070J	A225400276-574		. . DOOR ASSY-SINGLE used on 001K SEE 25-41-51-11E FOR DET		001
-070K	A2254002768930		. . DOOR ASSY-SINGLE POST SB 25-1314 used on 001L SEE 25-41-51-11N FOR DET		001
-070L	A225400278-534		. . DOOR ASSY-SINGLE POST SB 25-1325 used on 001M SEE 25-41-51-11M FOR DET		001
-070M	A225400263-902		. . DOOR ASSY-SINGLE used on 001N SEE 25-41-51-11R FOR DET		001
080A	D2549020607671		. . TOILET UNIT AND TOILET SHROUD NP used on 001A SEE 25-41-51-12C FOR DET		001

- ITEM NOT ILLUSTRATED

FIG. ITEM	PART NUMBER	AIRLINE STOCK NUMBER	NOMENCLATURE 1234567		EFF CODE	UNITS PER ASSY
-080B	D2549010607871		. . TOILET UNIT AND TOILET SHROUD used on 001B, 001T SEE 25-41-51-12E FOR DET	NP		001
-080C	D2549020514671		. . TOILET UNIT AND TOILET SHROUD used on 001C SEE 25-41-51-12E FOR DET	NP		001
-080D	D2549030611271		. . TOILET UNIT AND TOILET SHROUD used on 001F, 001H, 001J, 001R, 001S SEE 25-41-51-12E FOR DET	NP		001
-080E	D2549010607071		. . TOILET UNIT AND TOILET SHROUD used on 001D, 001E, 001G, 001K, 001M, 001P, 001Q SEE 25-41-51-12D FOR DET	NP		001
-080F	D2549010607471		. . TOILET UNIT AND TOILET SHROUD used on 001L SEE 25-41-51-12E FOR DET	NP		001
-080G	D2547161202871		. . TOILET UNIT AND TOILET SHROUD used on 001N SEE 25-41-51-12D FOR DET	NP		001
090A	D2549020702272		. . PAN-FLOOR used on 001A SEE 25-41-51-13D FOR DET	NP		001
-090B	D2549010607872		. . PAN-FLOOR used on 001B, 001T SEE 25-41-51-13H FOR DET	NP		001

- ITEM NOT ILLUSTRATED

FIG. ITEM	PART NUMBER	AIRLINE STOCK NUMBER	NOMENCLATURE 1234567	EFF CODE	UNITS PER ASSY
-090C	D2549020512672		. . PAN-FLOOR NP used on 001C SEE 25-41-51-13H FOR DET		001
-090D	D2549030611672		. . PAN-FLOOR NP used on 001D, 001Q SEE 25-41-51-13H FOR DET		001
-090E	D2549030611472		. . PAN-FLOOR NP used on 001E SEE 25-41-51-13H FOR DET		001
-090F	D2549030611272		. . PAN-FLOOR NP used on 001F SEE 25-41-51-13H FOR DET		001
-090G	D2549010607272		. . PAN-FLOOR NP used on 001G, 001P SEE 25-41-51-13H FOR DET		001
-090H	D2549030610672		. . PAN-FLOOR NP used on 001H, 001J, 001R, 001S SEE 25-41-51-13H FOR DET		001
-090J	D2549030504072		. . PAN-FLOOR NP used on 001K, 001M SEE 25-41-51-13B FOR DET		001
-090K	D2549030411672		. . PAN-FLOOR NP used on 001L SEE 25-41-51-13R FOR DET		001
-090L	D2547161202872		. . PAN-FLOOR NP used on 001N SEE 25-41-51-13W FOR DET		001
100A	D2549010512673		. . LIGHT-DOOR NP used on 001A, 001B, 001C, 001D, 001E, 001G, 001K, 001M, 001P, 001Q, 001T SEE 25-41-51-140 FOR DET		001

- ITEM NOT ILLUSTRATED

FIG. ITEM	PART NUMBER	AIRLINE STOCK NUMBER	NOMENCLATURE 1234567	EFF CODE	UNITS PER ASSY
-100B	D2549020613673		. . LIGHT-DOOR NP used on 001F, 001H, 001J, 001R, 001S SEE 25-41-51-140 FOR DET		001
-100C	D2549030508473		. . LIGHT-DOOR NP used on 001L SEE 25-41-51-140 FOR DET		001
-100D	D2547161202873		. . LIGHT-DOOR NP used on 001N SEE 25-41-51-14B FOR DET		001
110A	D2549020706274		. . WASHBASIN UNIT NP used on 001A, 001K, 001M SEE 25-41-51-15C FOR DET		001
-110B	D2549010603274		. . WASHBASIN UNIT NP used on 001B, 001T SEE 25-41-51-15F FOR DET		001
-110C	D2549020706674		. . WASHBASIN UNIT NP used on 001C SEE 25-41-51-15D FOR DET		001
-110D	D2549030509874		. . WASHBASIN UNIT NP used on 001D, 001G, 001P, 001Q SEE 25-41-51-15G FOR DET		001
-110E	D2549020614474		. . WASHBASIN UNIT NP used on 001E SEE 25-41-51-15F FOR DET		001
-110F	D2549030513874		. . WASHBASIN UNIT NP used on 001F SEE 25-41-51-15F FOR DET		001
-110G	D2549020613674		. . WASHBASIN UNIT NP used on 001H, 001J, 001R, 001S SEE 25-41-51-15F FOR DET		001

- ITEM NOT ILLUSTRATED

FIG. ITEM	PART NUMBER	AIRLINE STOCK NUMBER	NOMENCLATURE 1234567		EFF CODE	UNITS PER ASSY
-110H	D2549020704674		. . WASHBASIN UNIT used on 001L SEE 25-41-51-15G FOR DET	NP		001
-110J	D2547161202874		. . WASHBASIN UNIT used on 001N SEE 25-41-51-15T FOR DET	NP		001
120A	D2549020607675		. . DOOR ASSY-WASHBASIN UNIT used on 001A, 001C SEE 25-41-51-16C FOR DET	NP		001
-120B	D2549010510475		. . DOOR ASSY-WASHBASIN UNIT used on 001B, 001T SEE 25-41-51-16B FOR DET	NP		001
-120C	D2549020607075		. . DOOR ASSY-WASHBASIN UNIT used on 001D, 001E, 001G, 001K, 001M, 001P, 001Q SEE 25-41-51-16B FOR DET	NP		001
-120D	D2549030505475		. . DOOR ASSY-WASHBASIN UNIT used on 001F, 001H, 001J, 001R, 001S SEE 25-41-51-16B FOR DET	NP		001
-120E	D2549030506075		. . DOOR ASSY-WASHBASIN UNIT used on 001L SEE 25-41-51-16B FOR DET	NP		001
-120F	D2547161202875		. . DOOR ASSY-WASHBASIN UNIT used on 001N SEE 25-41-51-16F FOR DET	NP		001

- ITEM NOT ILLUSTRATED

FIG. ITEM	PART NUMBER	AIRLINE STOCK NUMBER	NOMENCLATURE 1234567		EFF CODE	UNITS PER ASSY
130A	D2549020607676		. . PANEL ASSY-WASHBASIN UNIT used on 001A, 001C SEE 25-41-51-17C FOR DET	NP		001
-130B	D2549010604876		. . PANEL ASSY-WASHBASIN UNIT used on 001B, 001T SEE 25-41-51-17D FOR DET	NP		001
-130C	D2549030504876		. . PANEL ASSY-WASHBASIN UNIT used on 001D, 001E, 001G, 001K, 001M, 001P, 001Q SEE 25-41-51-17C FOR DET	NP		001
-130D	D2549020506276		. . PANEL ASSY-WASHBASIN UNIT used on 001F, 001H, 001J, 001R, 001S SEE 25-41-51-17C FOR DET	NP		001
-130E	D2549030506076		. . PANEL ASSY-WASHBASIN UNIT used on 001L SEE 25-41-51-17C FOR DET	NP		001
-130F	D2547161202876		. . PANEL ASSY-WASHBASIN UNIT used on 001N SEE 25-41-51-17G FOR DET	NP		001
140A	D2549030504877		. . BIN-WASTE,CHUTE-WASTE AND EXTINGUISHER-FIRE used on 001A, 001B, 001C, 001D, 001E, 001G, 001H, 001J, 001K, 001L, 001M, 001P, 001Q, 001R, 001S, 001T SEE 25-41-51-180 FOR DET	NP		001

- ITEM NOT ILLUSTRATED

FIG. ITEM	PART NUMBER	AIRLINE STOCK NUMBER	NOMENCLATURE 1234567		EFF CODE	UNITS PER ASSY
-140B	D2549020506277		. . BIN-WASTE,CHUTE-WASTE AND EXTINGUISHER-FIRE used on 001F SEE 25-41-51-180 FOR DET	NP		001
-140C	D2547161202877		. . BIN-WASTE,CHUTE-WASTE AND EXTINGUISHER-FIRE used on 001N SEE 25-41-51-180 FOR DET	NP		001
150A	D2549030504878		. . CABINET-SERVICE PRE VSB A2-254-25-080 used on 001A, 001C, 001D, 001G, 001K, 001M SEE 25-41-51-19E FOR DET	NP		001
-150B	D2549030505878		. . CABINET-SERVICE used on 001E SEE 25-41-51-19E FOR DET	NP		001
-150C	D2549030505478		. . CABINET-SERVICE used on 001F SEE 25-41-51-19E FOR DET	NP		001
-150D	D2549020605678		. . CABINET-SERVICE used on 001H, 001J, 001R, 001S SEE 25-41-51-19E FOR DET	NP		001
-150E	D2549030506078		. . CABINET-SERVICE used on 001L SEE 25-41-51-19E FOR DET	NP		001
-150F	D2549030504078		. . CABINET-SERVICE used on 001B, 001T SEE 25-41-51-19E FOR DET	NP		001
-150G	D2547161202878		. . CABINET-SERVICE used on 001N SEE 25-41-51-19K FOR DET	NP		001

- ITEM NOT ILLUSTRATED

FIG. ITEM	PART NUMBER	AIRLINE STOCK NUMBER	NOMENCLATURE 1234567		EFF CODE	UNITS PER ASSY
-150H	R22540114500278		. . CABINET-SERVICE POST VSB A2-254-25-080 used on 001P, 001Q SEE 25-41-51-19E FOR DET	NP		001
160A	D2549010510679		. . TABLE-NURSING used on 001A, 001B, 001C, 001D, 001Q, 001T SEE 25-41-51-20A FOR DET	NP		001
-160B	D2549010512679		. . TABLE-NURSING used on 001E, 001G, 001K, 001M, 001P SEE 25-41-51-20A FOR DET	NP		001
-160C	D2549020613679		. . TABLE-NURSING used on 001F, 001H, 001J, 001R, 001S SEE 25-41-51-20A FOR DET	NP		001
-160D	D2549030508479		. . TABLE-NURSING used on 001L SEE 25-41-51-20A FOR DET	NP		001
-160E	D2549030614679		. . TABLE-NURSING used on 001N SEE 25-41-51-20B FOR DET	NP		001
170A	D2549010514280		. . VENTILATION SYSTEM used on 001A, 001B, 001C, 001D, 001E, 001G, 001K, 001M, 001P, 001Q, 001T SEE 25-41-51-21A FOR DET	NP		001
-170B	D2549020507080		. . VENTILATION SYSTEM used on 001F, 001H, 001J, 001R, 001S SEE 25-41-51-21A FOR DET	NP		001

- ITEM NOT ILLUSTRATED

FIG. ITEM	PART NUMBER	AIRLINE STOCK NUMBER	NOMENCLATURE 1234567		EFF CODE	UNITS PER ASSY
-170C	D2549030508480		. . VENTILATION SYSTEM used on 001L SEE 25-41-51-21A FOR DET	NP		001
-170D	D2549020707480		. . VENTILATION SYSTEM used on 001N SEE 25-41-51-21A FOR DET	NP		001
180A	D2549010606081		. . WATER SYSTEM-POTABLE used on 001A, 001C, 001D, 001E, 001G, 001P, 001Q SEE 25-41-51-22D FOR DET	NP		001
-180B	D2549010606481		. . WATER SYSTEM-POTABLE used on 001B, 001T SEE 25-41-51-22F FOR DET	NP		001
-180C	D2549030608281		. . WATER SYSTEM-POTABLE used on 001K, 001L, 001M SEE 25-41-51-22G FOR DET	NP		001
-180D	D2549030607481		. . WATER SYSTEM-POTABLE used on 001F SEE 25-41-51-22E FOR DET	NP		001
-180E	D2549030607081		. . WATER SYSTEM-POTABLE used on 001H, 001J, 001R, 001S SEE 25-41-51-22D FOR DET	NP		001
-180F	D2547161202881		. . WATER SYSTEM-POTABLE used on 001N	NP		001
190A	D2549010511082		. . WATER SYSTEM-WASTE used on 001A, 001B, 001C, 001D, 001G, 001P, 001Q, 001T SEE 25-41-51-23B FOR DET	NP		001
-190B	D2549020507282		. . WATER SYSTEM-WASTE used on 001K, 001M SEE 25-41-51-23B FOR DET	NP		001

- ITEM NOT ILLUSTRATED

FIG. ITEM	PART NUMBER	AIRLINE STOCK NUMBER	NOMENCLATURE 1234567	EFF CODE	UNITS PER ASSY
-190C	D2549030504882		. . WATER SYSTEM-WASTE NP used on 001E SEE 25-41-51-23B FOR DET		001
-190D	D2549020506282		. . WATER SYSTEM-WASTE NP used on 001F SEE 25-41-51-23B FOR DET		001
-190E	D2549020605682		. . WATER SYSTEM-WASTE NP used on 001H, 001J, 001L, 001N, 001R, 001S SEE 25-41-51-23B FOR DET		001
200A	D2549020710683		. . ELECTRICAL SYSTEM NP used on 001A, 001C SEE 25-41-51-26K FOR DET		001
-200B	D2549010607883		. . ELECTRICAL SYSTEM NP used on 001B, 001T SEE 25-41-51-26M FOR DET		001
-200C	D2549030611683		. . ELECTRICAL SYSTEM NP used on 001D, 001Q SEE 25-41-51-26M FOR DET		001
-200D	D2549030611483		. . ELECTRICAL SYSTEM NP used on 001E SEE 25-41-51-26M FOR DET		001
-200E	D2549020513083		. . ELECTRICAL SYSTEM NP used on 001F, 001K, 001L, 001M SEE 25-41-51-26M FOR DET		001
-200F	D2549010607283		. . ELECTRICAL SYSTEM NP used on 001G, 001P SEE 25-41-51-26M FOR DET		001
-200G	D2549020508283		. . ELECTRICAL SYSTEM NP used on 001H, 001J, 001R, 001S SEE 25-41-51-26K FOR DET		001

- ITEM NOT ILLUSTRATED

FIG. ITEM	PART NUMBER	AIRLINE STOCK NUMBER	NOMENCLATURE 1234567		EFF CODE	UNITS PER ASSY
-200H	D2547161202883		. . ELECTRICAL SYSTEM used on 001N	NP		001
210A	D9250000000285		. . ELECTRICAL SYSTEM-COCKPIT DOOR LOCKING used on 001N SEE 25-41-51-31B FOR DET	NP		001

- ITEM NOT ILLUSTRATED

THIS PAGE IS INTENTIONALLY LEFT BLANK

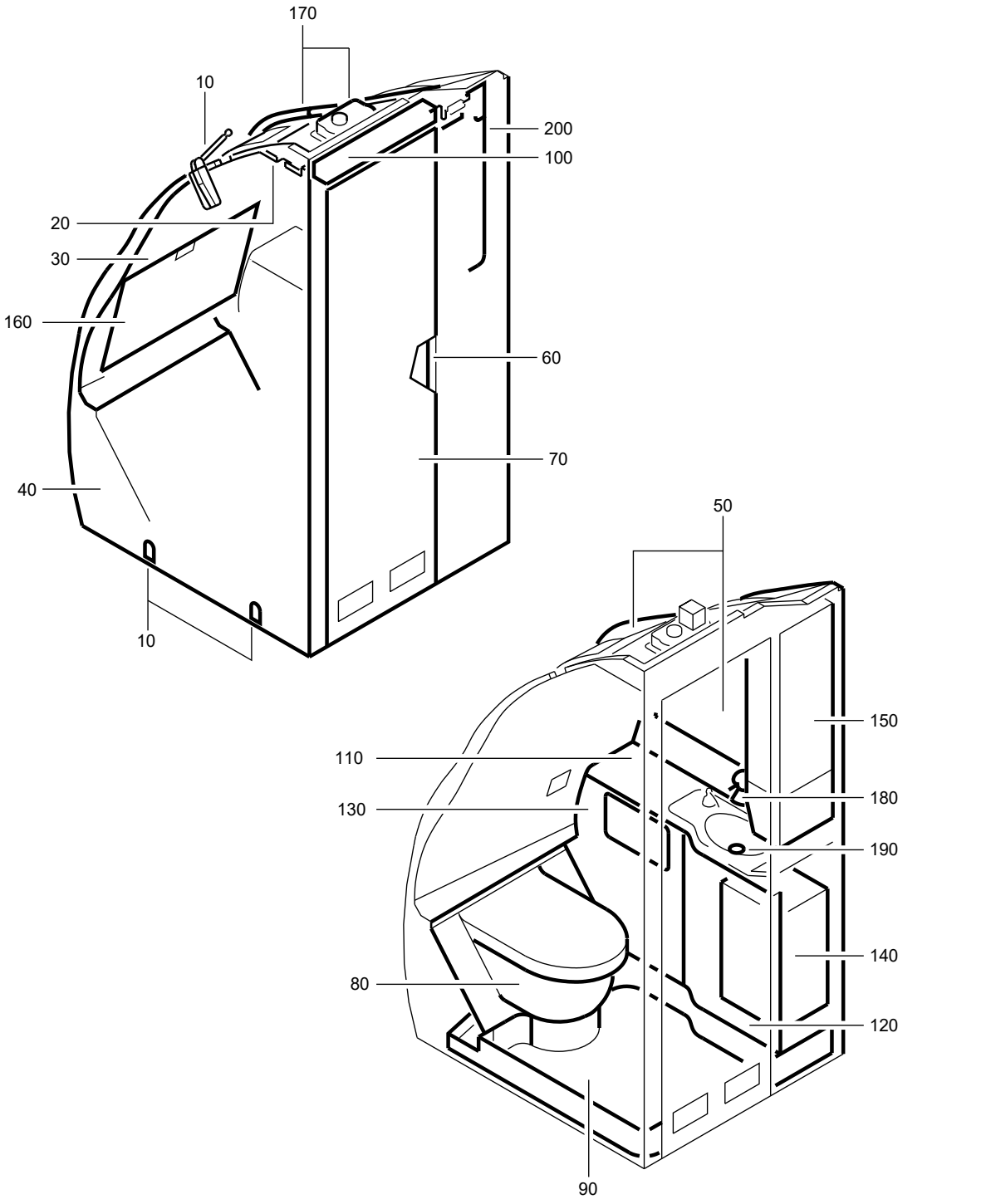

F_PL_254151_41_N_01_00

LAVATORY A ASSY
Figure 41N/EN254151SHEET41N01

FIG. ITEM	PART NUMBER	AIRLINE STOCK NUMBER	NOMENCLATURE 1234567	EFF CODE	UNITS PER ASSY
41N					
-001A	D2549010609000		. LAVATORY A ASSY SEE SIL 25-117 FOR DET		RF
-001B	D2549010609400		. LAVATORY A ASSY PRE VSB A2-254-25-047 SEE SIL 25-117 FOR DET		RF
-001C	D2549020512800		. LAVATORY A ASSY PRE VSB A2-254-25-046 SEE SIL 25-117 FOR DET		RF
-001D	D2549030613200		. LAVATORY A ASSY SEE SIL 25-117 FOR DET		RF
-001E	D2549020514000		. LAVATORY A ASSY SEE SIL 25-117 FOR DET		RF
-001F	D2549020512000		. LAVATORY A ASSY PRE VSB A2-254-25-042 PRE VSB A2-254-25-054 SEE SIL 25-117 FOR DET		RF
-001G	D2549020711600		. LAVATORY A ASSY SEE SIL 25-117 FOR DET		RF
-001H	D2549020512400		. LAVATORY A ASSY PRE VSB A2-254-25-039 PRE VSB A2-254-25-054 SEE SIL 25-117 FOR DET		RF
-001J	D2549020801600		. LAVATORY A ASSY SEE SIL 25-117 FOR DET		RF
-001K	D2549020511200		. LAVATORY A ASSY SEE SIL 25-117 FOR DET		RF
-001L	D2549010610200		. LAVATORY A ASSY SEE SIL 25-117 FOR DET		RF

- ITEM NOT ILLUSTRATED

FIG. ITEM	PART NUMBER	AIRLINE STOCK NUMBER	NOMENCLATURE 1234567		EFF CODE	UNITS PER ASSY
-001M	R225401168-002		. LAVATORY A ASSY POST VSB A2-254-25-039 SEE SIL 25-117 FOR DET			RF
-001N	R225401196-004		. LAVATORY A ASSY PRE VSB A2-254-25-130 POST VSB A2-254-25-042 SEE SIL 25-117 FOR DET			RF
-001P	R225401196-036		. LAVATORY A ASSY POST VSB A2-254-25-054 SEE SIL 25-117 FOR DET			RF
-001Q	R225401168-022		. LAVATORY A ASSY POST VSB A2-254-25-054 SEE SIL 25-117 FOR DET			RF
-001R	R225401134-010		. LAVATORY A ASSY POST VSB A2-254-25-046			RF
-001S	R225401183-002		. LAVATORY A ASSY POST VSB A2-254-25-047			RF
-001T	R225401196-050		. LAVATORY A ASSY POST VSB A2-254-25-130 SEE SIL 25-117 FOR DET			RF
010A	D2549010609061		. . ATTACHMENT-LAVATORY used on 001A SEE 25-41-51-02C FOR DET	NP		001
-010B	D2549030514861		. . ATTACHMENT-LAVATORY PRE VSB A2-254-25-130 used on 001B, 001F, 001N, 001P, 001S SEE 25-41-51-02A FOR DET	NP		001
-010C	D2549030612861		. . ATTACHMENT-LAVATORY used on 001C, 001D, 001R SEE 25-41-51-02C FOR DET	NP		001

- ITEM NOT ILLUSTRATED

FIG. ITEM	PART NUMBER	AIRLINE STOCK NUMBER	NOMENCLATURE 1234567		EFF CODE	UNITS PER ASSY
-010D	D2549030608061		. . ATTACHMENT-LAVATORY used on 001G, 001K SEE 25-41-51-02C FOR DET	NP		001
-010E	D2549020512461		. . ATTACHMENT-LAVATORY used on 001H, 001M, 001Q SEE 25-41-51-02C FOR DET	NP		001
-010F	D2549010610261		. . ATTACHMENT-LAVATORY used on 001L SEE 25-41-51-02C FOR DET	NP		001
-010G	D2549020705861		. . ATTACHMENT-LAVATORY used on 001E SEE 25-41-51-02D FOR DET	NP		001
-010H	D2549010610061		. . ATTACHMENT-LAVATORY used on 001J SEE 25-41-51-02D FOR DET	NP		001
-010J	R22540119604861		. . ATTACHMENT-LAVATORY POST VSB A2-254-25-130 used on 001T SEE 25-41-51-02A FOR DET	NP		001
020A	D2549030506063		. . PANEL-CEILING used on 001A SEE 25-41-51-040 FOR DET	NP		001
-020B	D2549020602663		. . PANEL-CEILING PRE VSB A2-254-25-130 used on 001B, 001E, 001F, 001G, 001J, 001K, 001N, 001P, 001S SEE 25-41-51-040 FOR DET	NP		001
-020C	D2549020602863		. . PANEL-CEILING used on 001C, 001D, 001R SEE 25-41-51-040 FOR DET	NP		001

- ITEM NOT ILLUSTRATED

FIG. ITEM	PART NUMBER	AIRLINE STOCK NUMBER	NOMENCLATURE 1234567	EFF CODE	UNITS PER ASSY
-020D	D2549030507263		. . PANEL-CEILING NP used on 001H, 001M, 001Q SEE 25-41-51-040 FOR DET		001
-020E	D2549030505663		. . PANEL-CEILING NP used on 001L SEE 25-41-51-040 FOR DET		001
-020F	R22540119604663		. . PANEL-CEILING NP POST VSB A2-254-25-130 used on 001T SEE 25-41-51-040 FOR DET		001
030A	D2549010609064		. . WALL-REAR NP used on 001A SEE 25-41-51-05C FOR DET		001
-030B	D2549010609464		. . WALL-REAR NP used on 001B, 001S SEE 25-41-51-05D FOR DET		001
-030C	D2549020613664		. . WALL-REAR NP used on 001C, 001R SEE 25-41-51-05B FOR DET		001
-030D	D2549030613264		. . WALL-REAR NP used on 001D SEE 25-41-51-05F FOR DET		001
-030E	D2549010512664		. . WALL-REAR NP PRE VSB A2-254-25-130 used on 001E, 001F, 001N, 001P SEE 25-41-51-05B FOR DET		001
-030F	D2549020711664		. . WALL-REAR NP used on 001G SEE 25-41-51-05D FOR DET		001
-030G	D2549020512464		. . WALL-REAR NP used on 001H, 001M, 001Q SEE 25-41-51-05C FOR DET		001

- ITEM NOT ILLUSTRATED

FIG. ITEM	PART NUMBER	AIRLINE STOCK NUMBER	NOMENCLATURE 1234567	EFF CODE	UNITS PER ASSY
-030H	D2549030613464		. . WALL-REAR NP used on 001J, 001K SEE 25-41-51-05C FOR DET		001
-030J	D2549010610264		. . WALL-REAR NP used on 001L SEE 25-41-51-05G FOR DET		001
-030K	R22540119604664		. . WALL-REAR NP POST VSB A2-254-25-130 used on 001T SEE 25-41-51-05B FOR DET		001
040A	D2549010609065		. . WALL-SIDE NP used on 001A SEE 25-41-51-06U FOR DET		001
-040B	D2549010609465		. . WALL-SIDE NP used on 001B, 001S SEE 25-41-51-06V FOR DET		001
-040C	D2549020613665		. . WALL-SIDE NP used on 001C, 001R SEE 25-41-51-06K FOR DET		001
-040D	D2549030613265		. . WALL-SIDE NP used on 001D SEE 25-41-51-06W FOR DET		001
-040E	D2549020614465		. . WALL-SIDE NP used on 001E SEE 25-41-51-06L FOR DET		001
-040F	D2549020703465		. . WALL-SIDE NP PRE VSB A2-254-25-042 PRE VSB A2-254-25-054 used on 001F SEE 25-41-51-06P FOR DET		001

- ITEM NOT ILLUSTRATED

FIG. ITEM	PART NUMBER	AIRLINE STOCK NUMBER	NOMENCLATURE 1234567	EFF CODE	UNITS PER ASSY
-040G	D2549020711665		. . WALL-SIDE NP used on 001G SEE 25-41-51-06W FOR DET		001
-040H	D2549020512465		. . WALL-SIDE NP PRE VSB A2-254-25-054 used on 001H, 001M SEE 25-41-51-06V FOR DET		001
-040J	D2549020801665		. . WALL-SIDE NP used on 001J SEE 25-41-51-06W FOR DET		001
-040K	D2549020511265		. . WALL-SIDE NP used on 001K SEE 25-41-51-06V FOR DET		001
-040L	D2549010610265		. . WALL-SIDE NP used on 001L SEE 25-41-51-06W FOR DET		001
-040M	R22540115200065		. . WALL-SIDE NP PRE VSB A2-254-25-130 POST VSB A2-254-25-042 used on 001N SEE 25-41-51-06P FOR DET		001
-040N	R22540116802265		. . WALL-SIDE NP POST VSB A2-254-25-054 used on 001Q SEE 25-41-51-06V FOR DET		001
-040P	R22540119603465		. . WALL-SIDE NP POST VSB A2-254-25-054 used on 001P SEE 25-41-51-06P FOR DET		001
-040Q	R22540119604665		. . WALL-SIDE NP POST VSB A2-254-25-130 used on 001T SEE 25-41-51-06P FOR DET		001

- ITEM NOT ILLUSTRATED

FIG. ITEM	PART NUMBER	AIRLINE STOCK NUMBER	NOMENCLATURE 1234567		EFF CODE	UNITS PER ASSY
050A	D2549010609066		. . HOUSING used on 001A SEE 25-41-51-07K FOR DET	NP		001
-050B	D2549010609466		. . HOUSING used on 001B, 001S SEE 25-41-51-07K FOR DET	NP		001
-050C	D2549020605666		. . HOUSING used on 001C, 001E, 001R SEE 25-41-51-07D FOR DET	NP		001
-050D	D2549030613266		. . HOUSING used on 001D SEE 25-41-51-07K FOR DET	NP		001
-050E	D2549030606066		. . HOUSING PRE VSB A2-254-25-130 used on 001F, 001N, 001P SEE 25-41-51-07G FOR DET	NP		001
-050F	D2549020711666		. . HOUSING used on 001G SEE 25-41-51-07Y FOR DET	NP		001
-050G	D2549020512466		. . HOUSING used on 001H, 001M, 001Q SEE 25-41-51-07L FOR DET	NP		001
-050H	D2549020801666		. . HOUSING used on 001J SEE 25-41-51-07L FOR DET	NP		001
-050J	D2549020511266		. . HOUSING used on 001K SEE 25-41-51-07L FOR DET	NP		001
-050K	D2549010610266		. . HOUSING used on 001L SEE 25-41-51-07L FOR DET	NP		001

- ITEM NOT ILLUSTRATED

FIG. ITEM	PART NUMBER	AIRLINE STOCK NUMBER	NOMENCLATURE 1234567	EFF CODE	UNITS PER ASSY
-050L	R22540119604666		. . HOUSING NP POST VSB A2-254-25-130 used on 001T SEE 25-41-51-07G FOR DET		001
060A	D2549010500069		. . DOOR INSTL NP used on 001B, 001C, 001D, 001E, 001F, 001G, 001H, 001J, 001K, 001L, 001M, 001N, 001P, 001Q, 001R, 001S, 001T SEE 25-41-51-100 FOR DET		001
-060B	D2549020401269		. . DOOR INSTL NP POST SB 25-1314 used on 001A SEE 25-41-51-10A FOR DET		001
070A	A2254002768930		. . DOOR ASSY-SINGLE POST SB 25-1314 used on 001A SEE 25-41-51-11N FOR DET		001
-070B	A225400276-924		. . DOOR ASSY-SINGLE used on 001B, 001S SEE 25-41-51-11E FOR DET		001
-070C	A225400276-570		. . DOOR ASSY-SINGLE used on 001C, 001R SEE 25-41-51-11E FOR DET		001
-070D	A225400276-590		. . DOOR ASSY-SINGLE used on 001D SEE 25-41-51-11E FOR DET		001
-070E	A225400276-588		. . DOOR ASSY-SINGLE used on 001E, 001J SEE 25-41-51-11F FOR DET		001

- ITEM NOT ILLUSTRATED

FIG. ITEM	PART NUMBER	AIRLINE STOCK NUMBER	NOMENCLATURE 1234567		EFF CODE	UNITS PER ASSY
-070F	A225400276-952		. . DOOR ASSY-SINGLE PRE VSB A2-254-25-130 used on 001F, 001N, 001P SEE 25-41-51-11G FOR DET			001
-070G	A225400276-942		. . DOOR ASSY-SINGLE used on 001G SEE 25-41-51-11F FOR DET			001
-070H	A225400276-932		. . DOOR ASSY-SINGLE PRE VSB A2-254-25-039 used on 001H, 001Q SEE 25-41-51-11D FOR DET			001
-070J	A225400276-584		. . DOOR ASSY-SINGLE used on 001K SEE 25-41-51-11F FOR DET			001
-070K	A225400278-808		. . DOOR ASSY-SINGLE used on 001L SEE 25-41-51-11H FOR DET			001
-070L	A225400276-990		. . DOOR ASSY-SINGLE POST VSB A2-254-25-039 used on 001M SEE 25-41-51-11D FOR DET			001
-070M	A225400263-990		. . DOOR ASSY-SINGLE POST VSB A2-254-25-130 used on 001T SEE 25-41-51-11G FOR DET			001
080A	D2549010607471		. . TOILET UNIT AND TOILET SHROUD used on 001A SEE 25-41-51-12E FOR DET	NP		001
-080B	D2549010607871		. . TOILET UNIT AND TOILET SHROUD used on 001B, 001S SEE 25-41-51-12E FOR DET	NP		001

- ITEM NOT ILLUSTRATED

FIG. ITEM	PART NUMBER	AIRLINE STOCK NUMBER	NOMENCLATURE 1234567		EFF CODE	UNITS PER ASSY
-080C	D2549030611271		. . TOILET UNIT AND TOILET SHROUD used on 001C, 001D, 001R SEE 25-41-51-12E FOR DET	NP		001
-080D	D2549010607071		. . TOILET UNIT AND TOILET SHROUD PRE VSB A2-254-25-130 used on 001E, 001F, 001J, 001K, 001L, 001N, 001P SEE 25-41-51-12D FOR DET	NP		001
-080E	D2549020514671		. . TOILET UNIT AND TOILET SHROUD used on 001G SEE 25-41-51-12E FOR DET	NP		001
-080F	D2549020512471		. . TOILET UNIT AND TOILET SHROUD used on 001H, 001M, 001Q SEE 25-41-51-12E FOR DET	NP		001
-080G	R22540119605071		. . TOILET UNIT AND TOILET SHROUD POST VSB A2-254-25-130 used on 001T SEE 25-41-51-12D FOR DET	NP		001
090A	D2549030411672		. . PAN-FLOOR used on 001A SEE 25-41-51-13R FOR DET	NP		001
-090B	D2549010607872		. . PAN-FLOOR used on 001B, 001S SEE 25-41-51-13H FOR DET	NP		001
-090C	D2549020605672		. . PAN-FLOOR used on 001C, 001R SEE 25-41-51-13B FOR DET	NP		001

- ITEM NOT ILLUSTRATED

FIG. ITEM	PART NUMBER	AIRLINE STOCK NUMBER	NOMENCLATURE 1234567		EFF CODE	UNITS PER ASSY
-090D	D2549030611272		. . PAN-FLOOR used on 001D SEE 25-41-51-13H FOR DET	NP		001
-090E	D2549030514072		. . PAN-FLOOR used on 001E, 001J SEE 25-41-51-13D FOR DET	NP		001
-090F	D2549020704272		. . PAN-FLOOR PRE VSB A2-254-25-130 used on 001F, 001N, 001P SEE 25-41-51-13D FOR DET	NP		001
-090G	D2549020514672		. . PAN-FLOOR used on 001G SEE 25-41-51-13H FOR DET	NP		001
-090H	D2549020512472		. . PAN-FLOOR PRE VSB A2-254-25-039 used on 001H, 001Q SEE 25-41-51-13H FOR DET	NP		001
-090J	D2549030504072		. . PAN-FLOOR used on 001K SEE 25-41-51-13B FOR DET	NP		001
-090K	D2549020512672		. . PAN-FLOOR used on 001L SEE 25-41-51-13H FOR DET	NP		001
-090L	R22540116800072		. . PAN-FLOOR POST VSB A2-254-25-039 used on 001M SEE 25-41-51-13H FOR DET	NP		001
-090M	R22540119604672		. . PAN-FLOOR POST VSB A2-254-25-130 used on 001T SEE 25-41-51-13D FOR DET	NP		001

- ITEM NOT ILLUSTRATED

FIG. ITEM	PART NUMBER	AIRLINE STOCK NUMBER	NOMENCLATURE 1234567	EFF CODE	UNITS PER ASSY
100A	D2549030508473		. . LIGHT-DOOR NP used on 001A SEE 25-41-51-140 FOR DET		001
-100B	D2549010512673		. . LIGHT-DOOR NP PRE VSB A2-254-25-130 used on 001B, 001E, 001F, 001G, 001J, 001K, 001N, 001P, 001S SEE 25-41-51-140 FOR DET		001
-100C	D2549020613673		. . LIGHT-DOOR NP used on 001C, 001D, 001R SEE 25-41-51-140 FOR DET		001
-100D	D2549030508673		. . LIGHT-DOOR NP used on 001H, 001M, 001Q SEE 25-41-51-14A FOR DET		001
-100E	D2549010514073		. . LIGHT-DOOR NP used on 001L SEE 25-41-51-14A FOR DET		001
-100F	R22540119604673		. . LIGHT-DOOR NP POST VSB A2-254-25-130 used on 001T SEE 25-41-51-14C FOR DET		001
110A	D2549020704674		. . WASHBASIN UNIT NP used on 001A SEE 25-41-51-15G FOR DET		001
-110B	D2549010603274		. . WASHBASIN UNIT NP used on 001B, 001S SEE 25-41-51-15F FOR DET		001
-110C	D2549020613674		. . WASHBASIN UNIT NP used on 001C, 001R SEE 25-41-51-15F FOR DET		001

- ITEM NOT ILLUSTRATED

FIG. ITEM	PART NUMBER	AIRLINE STOCK NUMBER	NOMENCLATURE 1234567		EFF CODE	UNITS PER ASSY
-110D	D2549030513874		. . WASHBASIN UNIT used on 001D SEE 25-41-51-15F FOR DET	NP		001
-110E	D2549020614474		. . WASHBASIN UNIT used on 001E, 001J SEE 25-41-51-15F FOR DET	NP		001
-110F	D2549030514674		. . WASHBASIN UNIT PRE VSB A2-254-25-130 used on 001F, 001G, 001K, 001N, 001P SEE 25-41-51-15G FOR DET	NP		001
-110G	D2549030600874		. . WASHBASIN UNIT PRE VSB A2-254-25-039 used on 001H, 001Q SEE 25-41-51-15G FOR DET	NP		001
-110H	D2549030506074		. . WASHBASIN UNIT used on 001L SEE 25-41-51-15C FOR DET	NP		001
-110J	R22540116800074		. . WASHBASIN UNIT POST VSB A2-254-25-039 used on 001M SEE 25-41-51-15G FOR DET	NP		001
-110K	R22540119604674		. . WASHBASIN UNIT POST VSB A2-254-25-130 used on 001T SEE 25-41-51-15G FOR DET	NP		001
120A	D2549030506075		. . DOOR ASSY-WASHBASIN UNIT used on 001A SEE 25-41-51-16B FOR DET	NP		001

- ITEM NOT ILLUSTRATED

FIG. ITEM	PART NUMBER	AIRLINE STOCK NUMBER	NOMENCLATURE 1234567	EFF CODE	UNITS PER ASSY
-120B	D2549010510475		. . DOOR ASSY-WASHBASIN UNIT NP used on 001B, 001S SEE 25-41-51-16B FOR DET		001
-120C	D2549030505475		. . DOOR ASSY-WASHBASIN UNIT NP used on 001C, 001D, 001R SEE 25-41-51-16B FOR DET		001
-120D	D2549020607075		. . DOOR ASSY-WASHBASIN UNIT NP PRE VSB A2-254-25-130 used on 001E, 001F, 001J, 001K, 001L, 001N, 001P SEE 25-41-51-16B FOR DET		001
-120E	D2549020607675		. . DOOR ASSY-WASHBASIN UNIT NP used on 001G SEE 25-41-51-16C FOR DET		001
-120F	D2549030507275		. . DOOR ASSY-WASHBASIN UNIT NP used on 001H, 001M, 001Q SEE 25-41-51-16C FOR DET		001
-120G	R22540119605075		. . DOOR ASSY-WASHBASIN UNIT NP POST VSB A2-254-25-130 used on 001T SEE 25-41-51-16B FOR DET		001
130A	D2549030506076		. . PANEL ASSY-WASHBASIN UNIT NP used on 001A SEE 25-41-51-17C FOR DET		001

- ITEM NOT ILLUSTRATED

FIG. ITEM	PART NUMBER	AIRLINE STOCK NUMBER	NOMENCLATURE 1234567		EFF CODE	UNITS PER ASSY
-130B	D2549010604876		. . PANEL ASSY-WASHBASIN UNIT used on 001B, 001S SEE 25-41-51-17D FOR DET	NP		001
-130C	D2549020506276		. . PANEL ASSY-WASHBASIN UNIT used on 001C, 001D, 001R SEE 25-41-51-17C FOR DET	NP		001
-130D	D2549030504876		. . PANEL ASSY-WASHBASIN UNIT PRE VSB A2-254-25-130 used on 001E, 001F, 001J, 001K, 001L, 001N, 001P SEE 25-41-51-17C FOR DET	NP		001
-130E	D2549020607676		. . PANEL ASSY-WASHBASIN UNIT used on 001G SEE 25-41-51-17C FOR DET	NP		001
-130F	D2549030507276		. . PANEL ASSY-WASHBASIN UNIT used on 001H, 001M, 001Q SEE 25-41-51-17D FOR DET	NP		001
-130G	R22540119604676		. . PANEL ASSY-WASHBASIN UNIT POST VSB A2-254-25-130 used on 001T SEE 25-41-51-17C FOR DET	NP		001
140A	D2549030504877		. . BIN-WASTE,CHUTE-WASTE AND EXTINGUISHER-FIRE used on 001A, 001B, 001C, 001E, 001F, 001G, 001H, 001J, 001K, 001L, 001M, 001N, 001P, 001Q, 001R, 001S, 001T SEE 25-41-51-180 FOR DET	NP		001

- ITEM NOT ILLUSTRATED

FIG. ITEM	PART NUMBER	AIRLINE STOCK NUMBER	NOMENCLATURE 1234567	EFF CODE	UNITS PER ASSY
-140B	D2549020506277		. . BIN-WASTE,CHUTE-WASTE AND EXTINGUISHER-FIRE NP used on 001D SEE 25-41-51-180 FOR DET		001
150A	D2549030506078		. . CABINET-SERVICE NP used on 001A SEE 25-41-51-19E FOR DET		001
-150B	D2549030504078		. . CABINET-SERVICE NP used on 001B, 001S SEE 25-41-51-19E FOR DET		001
-150C	D2549020605678		. . CABINET-SERVICE NP used on 001C, 001R SEE 25-41-51-19E FOR DET		001
-150D	D2549030505478		. . CABINET-SERVICE NP used on 001D SEE 25-41-51-19E FOR DET		001
-150E	D2549030505878		. . CABINET-SERVICE NP used on 001E, 001J SEE 25-41-51-19E FOR DET		001
-150F	D2549030504878		. . CABINET-SERVICE NP PRE VSB A2-254-25-042 PRE VSB A2-254-25-054 used on 001F, 001G, 001K SEE 25-41-51-19E FOR DET		001
-150G	D2549030507278		. . CABINET-SERVICE NP PRE VSB A2-254-25-039 PRE VSB A2-254-25-054 used on 001H SEE 25-41-51-19F FOR DET		001
-150H	D2549010514078		. . CABINET-SERVICE NP used on 001L SEE 25-41-51-19E FOR DET		001

- ITEM NOT ILLUSTRATED

FIG. ITEM	PART NUMBER	AIRLINE STOCK NUMBER	NOMENCLATURE 1234567		EFF CODE	UNITS PER ASSY
-150J	R22540114200078		. . CABINET-SERVICE PRE VSB A2-254-25-130 POST VSB A2-254-25-042 used on 001N SEE 25-41-51-19E FOR DET	NP		001
-150K	R22540116800078		. . CABINET-SERVICE POST VSB A2-254-25-039 used on 001M SEE 25-41-51-19F FOR DET	NP		001
-150L	R22540119500078		. . CABINET-SERVICE POST VSB A2-254-25-054 used on 001P SEE 25-41-51-19E FOR DET	NP		001
-150M	R22540116800478		. . CABINET-SERVICE POST VSB A2-254-25-054 used on 001Q SEE 25-41-51-19F FOR DET	NP		001
-150N	R22540119604678		. . CABINET-SERVICE POST VSB A2-254-25-130 used on 001T SEE 25-41-51-19E FOR DET	NP		001
160A	D2549030508479		. . TABLE-NURSING used on 001A SEE 25-41-51-20A FOR DET	NP		001
-160B	D2549010510679		. . TABLE-NURSING used on 001B, 001G, 001K, 001S SEE 25-41-51-20A FOR DET	NP		001
-160C	D2549020613679		. . TABLE-NURSING used on 001C, 001D, 001R SEE 25-41-51-20A FOR DET	NP		001

- ITEM NOT ILLUSTRATED

FIG. ITEM	PART NUMBER	AIRLINE STOCK NUMBER	NOMENCLATURE 1234567	EFF CODE	UNITS PER ASSY
-160D	D2549010512679		. . TABLE-NURSING NP PRE VSB A2-254-25-130 used on 001E, 001F, 001J, 001N, 001P SEE 25-41-51-20A FOR DET		001
-160E	D2549030508679		. . TABLE-NURSING NP used on 001H, 001M, 001Q SEE 25-41-51-20A FOR DET		001
-160F	D2549010514079		. . TABLE-NURSING NP used on 001L SEE 25-41-51-20A FOR DET		001
-160G	R22540119604679		. . TABLE-NURSING NP POST VSB A2-254-25-130 used on 001T SEE 25-41-51-20A FOR DET		001
170A	D2549030508480		. . VENTILATION SYSTEM NP used on 001A SEE 25-41-51-21A FOR DET		001
-170B	D2549010514280		. . VENTILATION SYSTEM NP PRE VSB A2-254-25-130 used on 001E, 001F, 001G, 001J, 001K, 001N, 001P SEE 25-41-51-21A FOR DET		001
-170C	D2549020507080		. . VENTILATION SYSTEM NP used on 001C, 001D, 001R SEE 25-41-51-21A FOR DET		001
-170D	D2549030508680		. . VENTILATION SYSTEM NP used on 001H, 001M, 001Q SEE 25-41-51-21A FOR DET		001
-170E	D2549010610280		. . VENTILATION SYSTEM NP used on 001L SEE 25-41-51-21B FOR DET		001

- ITEM NOT ILLUSTRATED

FIG. ITEM	PART NUMBER	AIRLINE STOCK NUMBER	NOMENCLATURE 1234567		EFF CODE	UNITS PER ASSY
-170F	D2549020802680		. . VENTILATION SYSTEM used on 001B, 001S SEE 25-41-51-21B FOR DET	NP		001
-170G	R22540119604680		. . VENTILATION SYSTEM POST VSB A2-254-25-130 used on 001T SEE 25-41-51-21A FOR DET	NP		001
180A	D2549030608281		. . WATER SYSTEM-POTABLE used on 001A, 001C, 001R SEE 25-41-51-22G FOR DET	NP		001
-180B	D2549010606481		. . WATER SYSTEM-POTABLE used on 001B, 001S SEE 25-41-51-22F FOR DET	NP		001
-180C	D2549030607481		. . WATER SYSTEM-POTABLE used on 001D, 001L SEE 25-41-51-22E FOR DET	NP		001
-180D	D2549010606081		. . WATER SYSTEM-POTABLE used on 001E, 001F, 001G, 001H, 001J, 001K, 001M, 001N, 001P, 001Q SEE 25-41-51-22D FOR DET	NP		001
-180E	R22540161900081		. . WATER SYSTEM-POTABLE used on 001T SEE 25-41-51-22D FOR DET	NP		001
190A	D2549020605682		. . WATER SYSTEM-WASTE used on 001A, 001C, 001R SEE 25-41-51-23B FOR DET	NP		001
-190B	D2549010511082		. . WATER SYSTEM-WASTE used on 001B, 001F, 001G, 001H, 001K, 001M, 001N, 001P, 001Q, 001S, 001T SEE 25-41-51-23B FOR DET	NP		001

- ITEM NOT ILLUSTRATED

FIG. ITEM	PART NUMBER	AIRLINE STOCK NUMBER	NOMENCLATURE 1234567		EFF CODE	UNITS PER ASSY
-190C	D2549020506282		. . WATER SYSTEM-WASTE used on 001D SEE 25-41-51-23B FOR DET	NP		001
-190D	D2549030504882		. . WATER SYSTEM-WASTE used on 001E, 001J SEE 25-41-51-23B FOR DET	NP		001
-190E	D2549010610282		. . WATER SYSTEM-WASTE used on 001L SEE 25-41-51-23B FOR DET	NP		001
200A	D2549020513083		. . ELECTRICAL SYSTEM PRE VSB A2-254-25-130 used on 001A, 001D, 001E, 001F, 001G, 001H, 001J, 001K, 001L, 001M, 001N, 001P, 001Q SEE 25-41-51-26M FOR DET	NP		001
-200B	D2549010607883		. . ELECTRICAL SYSTEM used on 001B, 001S SEE 25-41-51-26M FOR DET	NP		001
-200C	D2549030402083		. . ELECTRICAL SYSTEM used on 001C, 001R SEE 25-41-51-26K FOR DET	NP		001
-200D	R22540119605083		. . ELECTRICAL SYSTEM POST VSB A2-254-25-130 used on 001T SEE 25-41-51-26M FOR DET	NP		001

- ITEM NOT ILLUSTRATED

THIS PAGE IS INTENTIONALLY LEFT BLANK

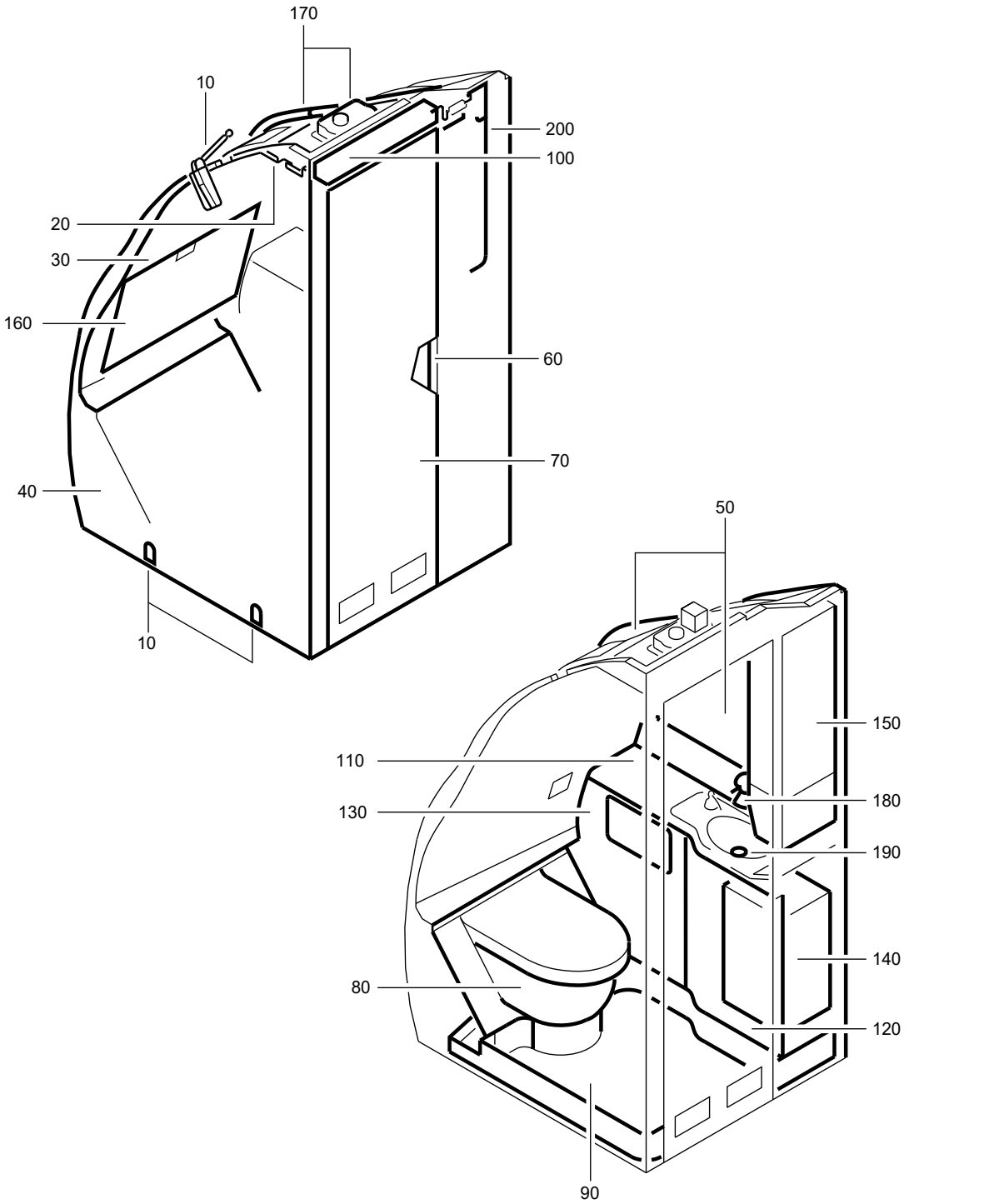

F_PL_254151_41_P_01_00

LAVATORY A ASSY
Figure 41P/EN254151SHEET41P01

FIG. ITEM	PART NUMBER	AIRLINE STOCK NUMBER	NOMENCLATURE 1234567	EFF CODE	UNITS PER ASSY
41P					
-001A	D2549020514800		. LAVATORY A ASSY SEE SIL 25-117 FOR DET		RF
-001B	D2549020511800		. LAVATORY A ASSY PRE VSB A2-254-25-131 SEE SIL 25-117 FOR DET		RF
-001C	D2549020802000		. LAVATORY A ASSY SEE SIL 25-117 FOR DET PRE VSB A2-254-25-054 PRE VSB A2-254-25-077		RF
-001D	D2549010609800		. LAVATORY A ASSY SEE SIL 25-117 FOR DET		RF
-001E	D2549010610000		. LAVATORY A ASSY VSB A2-254-25-013 SEE SIL 25-117 FOR DET		RF
-001F	D2549020802200		. LAVATORY A ASSY SEE SIL 25-117 FOR DET		RF
-001G	D2549030614600		. LAVATORY A ASSY SEE SIL 25-117 FOR DET		RF
-001H	D2549010610400		. LAVATORY A ASSY SEE SIL 25-117 FOR DET		RF
-001J	D2549020800800		. LAVATORY A ASSY SEE SIL 25-117 FOR DET		RF
-001K	D2549020510400		. LAVATORY A ASSY SEE SIL 25-117 FOR DET		RF
-001L	D2549020803800		. LAVATORY A ASSY SEE SIL 25-117 FOR DET		RF

- ITEM NOT ILLUSTRATED

FIG. ITEM	PART NUMBER	AIRLINE STOCK NUMBER	NOMENCLATURE 1234567		EFF CODE	UNITS PER ASSY
-001M	D2549010610000		. LAVATORY A ASSY POST SB 25-1312 VSB A2-254-25-013 SEE SIL 25-117 FOR DET			RF
-001N	D2549020514800		. LAVATORY A ASSY POST SB 25-1312 SEE SIL 25-117 FOR DET			RF
-001P	D2549020510400		. LAVATORY A ASSY SEE SIL 25-117 FOR DET			RF
-001Q	R225401629-002		. LAVATORY A ASSY SEE SIL 25-117 FOR DET POST VSB A2-254-25-077			RF
-001R	R225401629-000		. LAVATORY A ASSY SEE SIL 25-117 FOR DET POST VSB A2-254-25-054			RF
-001S	R225401605-002		. LAVATORY A ASSY POST VSB A2-254-25-131			RF
010A	D2549030608061		. . ATTACHMENT-LAVATORY PRE A2-254-25-013 used on 001A, 001C, 001D, 001E, 001F, 001H, 001K, 001P, 001Q, 001R SEE 25-41-51-02C FOR DET	NP		001
-010B	D2549030514861		. . ATTACHMENT-LAVATORY used on 001B, 001S SEE 25-41-51-02A FOR DET	NP		001
-010C	D2549030614661		. . ATTACHMENT-LAVATORY used on 001G SEE 25-41-51-02C FOR DET	NP		001

- ITEM NOT ILLUSTRATED

FIG. ITEM	PART NUMBER	AIRLINE STOCK NUMBER	NOMENCLATURE 1234567		EFF CODE	UNITS PER ASSY
-010D	D2549010610061		. . ATTACHMENT-LAVATORY POST SB 25-1312 PRE VSB A2-254-25-013 used on 001J, 001L, 001M, 001N SEE 25-41-51-02D FOR DET	NP		001
-010E	D2549030608061		. . ATTACHMENT-LAVATORY POST A2-254-25-013 used on 001E SEE 25-41-51-02C FOR DET	NP		001
-010F	D2549010610061		. . ATTACHMENT-LAVATORY POST VSB A2-254-25-013 used on 001M SEE 25-41-51-02D FOR DET	NP		001
020A	D2549020602663		. . PANEL-CEILING used on 001A, 001B, 001C, 001D, 001E, 001F, 001H, 001J, 001K, 001L, 001M, 001N, 001P, 001Q, 001R, 001S SEE 25-41-51-040 FOR DET	NP		001
-020B	D2549020610263		. . PANEL-CEILING used on 001G SEE 25-41-51-040 FOR DET	NP		001
030A	D2549030614664		. . WALL-REAR used on 001G SEE 25-41-51-05G FOR DET	NP		001
-030B	D2549030613464		. . WALL-REAR used on 001A, 001B, 001C, 001D, 001E, 001H, 001J, 001K, 001L, 001M, 001N, 001P, 001Q, 001R, 001S SEE 25-41-51-05C FOR DET	NP		001
-030C	D2549030608064		. . WALL-REAR used on 001F SEE 25-41-51-05C FOR DET	NP		001

- ITEM NOT ILLUSTRATED

FIG. ITEM	PART NUMBER	AIRLINE STOCK NUMBER	NOMENCLATURE 1234567	EFF CODE	UNITS PER ASSY
040A	D2549020514865		. . WALL-SIDE NP used on 001A, 001N SEE 25-41-51-06R FOR DET		001
-040B	D2549020511865		. . WALL-SIDE NP used on 001B, 001S SEE 25-41-51-06V FOR DET		001
-040C	D2549020802065		. . WALL-SIDE NP PRE VSB A2-254-25-054 used on 001C, 001Q SEE 25-41-51-06V FOR DET		001
-040D	D2549010609865		. . WALL-SIDE NP used on 001D SEE 25-41-51-06R FOR DET		001
-040E	D2549010610065		. . WALL-SIDE NP PRE VSB A2-254-25-013 used on 001E SEE 25-41-51-06W FOR DET		001
-040F	D2549020802265		. . WALL-SIDE NP used on 001F SEE 25-41-51-06W FOR DET		001
-040G	D2549030614665		. . WALL-SIDE NP used on 001G SEE 25-41-51-06V FOR DET		001
-040H	D2549010610465		. . WALL-SIDE NP used on 001H SEE 25-41-51-06W FOR DET		001
-040J	D2549020800865		. . WALL-SIDE NP used on 001J, 001L SEE 25-41-51-06W FOR DET		001
-040K	D2549020510465		. . WALL-SIDE NP used on 001K, 001P SEE 25-41-51-06W FOR DET		001

- ITEM NOT ILLUSTRATED

FIG. ITEM	PART NUMBER	AIRLINE STOCK NUMBER	NOMENCLATURE 1234567		EFF CODE	UNITS PER ASSY
-040L	D2549010610065		. . WALL-SIDE used on 001M SEE 25-41-51-06W FOR DET	NP		001
-040M	D2549010610065		. . WALL-SIDE POST VSB A2-254-25-013 used on 001E SEE 25-41-51-06W FOR DET	NP		001
-040N	R22540162900065		. . WALL-SIDE POST VSB A2-254-25-054 used on 001R SEE 25-41-51-06V FOR DET	NP		001
050A	D2549020514866		. . HOUSING used on 001A, 001D, 001N SEE 25-41-51-07L FOR DET	NP		001
-050B	D2549020511866		. . HOUSING used on 001B, 001C, 001H, 001Q, 001R, 001S SEE 25-41-51-07L FOR DET	NP		001
-050C	D2549030608066		. . HOUSING used on 001F SEE 25-41-51-07K FOR DET	NP		001
-050D	D2549020800066		. . HOUSING PRE VSB A2-254-25-013 used on 001E SEE 25-41-51-07Y FOR DET	NP		001
-050E	D2549030614666		. . HOUSING used on 001G SEE 25-41-51-07L FOR DET	NP		001
-050F	D2549020800866		. . HOUSING used on 001J SEE 25-41-51-07L FOR DET	NP		001

- ITEM NOT ILLUSTRATED

FIG. ITEM	PART NUMBER	AIRLINE STOCK NUMBER	NOMENCLATURE 1234567		EFF CODE	UNITS PER ASSY
-050G	D2549020510466		. . HOUSING used on 001K, 001P SEE 25-41-51-07L FOR DET	NP		001
-050H	D2549020803866		. . HOUSING used on 001L SEE 25-41-51-07N FOR DET	NP		001
-050J	D2549010610066		. . HOUSING PRE VSB A2-254-25-013 used on 001M SEE 25-41-51-49C FOR DET	NP		001
-050K	D2549020800066		. . HOUSING POST VSB A2-254-25-013 used on 001E SEE 25-41-51-07Y FOR DET	NP		001
-050L	D2549010610066		. . HOUSING POST VSB A2-254-25-013 used on 001M SEE 25-41-51-49C FOR DET	NP		001
060A	D2549010500069		. . DOOR INSTL used on 001A, 001B, 001C, 001D, 001F, 001G, 001H, 001J, 001K, 001L, 001N, 001P, 001Q, 001R, 001S SEE 25-41-51-100 FOR DET	NP		001
-060B	D2549020401269		. . DOOR INSTL used on 001E, 001M SEE 25-41-51-10A FOR DET	NP		001
070A	A225400278-806		. . DOOR ASSY-SINGLE used on 001A, 001D, 001N SEE 25-41-51-11H FOR DET			001
-070B	A225400276-958		. . DOOR ASSY-SINGLE used on 001B, 001S SEE 25-41-51-11J FOR DET			001

- ITEM NOT ILLUSTRATED

FIG. ITEM	PART NUMBER	AIRLINE STOCK NUMBER	NOMENCLATURE 1234567	EFF CODE	UNITS PER ASSY
-070C	A225400276-942		. . DOOR ASSY-SINGLE used on 001C, 001Q, 001R SEE 25-41-51-11F FOR DET		001
-070D	A2254002768574		. . DOOR ASSY-SINGLE used on 001E, 001M SEE 25-41-51-11N FOR DET		001
-070E	A225400278-800		. . DOOR ASSY-SINGLE used on 001F SEE 25-41-51-11H FOR DET		001
-070F	A225400276-940		. . DOOR ASSY-SINGLE used on 001G SEE 25-41-51-11F FOR DET		001
-070G	A225400278-502		. . DOOR ASSY-SINGLE used on 001H SEE 25-41-51-11H FOR DET		001
-070H	A225400276-596		. . DOOR ASSY-SINGLE used on 001J, 001L SEE 25-41-51-11G FOR DET		001
-070J	A225400278-516		. . DOOR ASSY-SINGLE used on 001K, 001P SEE 25-41-51-11K FOR DET		001
080A	D2549020514871		. . TOILET UNIT AND TOILET SHROUD NP used on 001A, 001D, 001N SEE 25-41-51-12E FOR DET		001
-080B	D2549020514671		. . TOILET UNIT AND TOILET SHROUD NP used on 001B, 001C, 001H, 001Q, 001R, 001S SEE 25-41-51-12E FOR DET		001

- ITEM NOT ILLUSTRATED

FIG. ITEM	PART NUMBER	AIRLINE STOCK NUMBER	NOMENCLATURE 1234567		EFF CODE	UNITS PER ASSY
-080C	D2549010607071		. . TOILET UNIT AND TOILET SHROUD used on 001E, 001F, 001K, 001M, 001P SEE 25-41-51-12D FOR DET	NP		001
-080D	D2549030614671		. . TOILET UNIT AND TOILET SHROUD used on 001G SEE 25-41-51-12E FOR DET	NP		001
-080E	D2549020512271		. . TOILET UNIT AND TOILET SHROUD used on 001J, 001L SEE 25-41-51-12D FOR DET	NP		001
090A	D2549010605672		. . PAN-FLOOR used on 001A SEE 25-41-51-13E FOR DET	NP		001
-090B	D2549020713672		. . PAN-FLOOR PRE VSB A2-254-25-131 used on 001B SEE 25-41-51-13E FOR DET	NP		001
-090C	D2549020708072		. . PAN-FLOOR used on 001C, 001G, 001Q, 001R SEE 25-41-51-13G FOR DET	NP		001
-090D	D2549010609872		. . PAN-FLOOR used on 001D SEE 25-41-51-13G FOR DET	NP		001
-090E	D2549010514272		. . PAN-FLOOR used on 001E, 001M SEE 25-41-51-13T FOR DET	NP		001
-090F	D2549010606872		. . PAN-FLOOR used on 001F SEE 25-41-51-13G FOR DET	NP		001

- ITEM NOT ILLUSTRATED

FIG. ITEM	PART NUMBER	AIRLINE STOCK NUMBER	NOMENCLATURE 1234567		EFF CODE	UNITS PER ASSY
-090G	D2549020511072		. . PAN-FLOOR used on 001H SEE 25-41-51-13H FOR DET	NP		001
-090H	D2549020512272		. . PAN-FLOOR used on 001J SEE 25-41-51-13H FOR DET	NP		001
-090J	D2549030511072		. . PAN-FLOOR used on 001K, 001P SEE 25-41-51-13C FOR DET	NP		001
-090K	D2549020611672		. . PAN-FLOOR used on 001L SEE 25-41-51-13C FOR DET	NP		001
-090L	D2549030602472		. . PAN-FLOOR used on 001N SEE 25-41-51-13T FOR DET	NP		001
-090M	R22540160500272		. . PAN-FLOOR POST VSB A2-254-25-131 used on 001S SEE 25-41-51-13E FOR DET	NP		001
100A	D2549010512673		. . LIGHT-DOOR used on 001A, 001B, 001C, 001D, 001E, 001F, 001H, 001J, 001K, 001L, 001M, 001N, 001P, 001Q, 001R, 001S SEE 25-41-51-140 FOR DET	NP		001
-100B	D2549020612273		. . LIGHT-DOOR used on 001G SEE 25-41-51-14A FOR DET	NP		001
110A	D2549020700674		. . WASHBASIN UNIT used on 001A, 001D, 001L, 001N SEE 25-41-51-15G FOR DET	NP		001

- ITEM NOT ILLUSTRATED

FIG. ITEM	PART NUMBER	AIRLINE STOCK NUMBER	NOMENCLATURE 1234567	EFF CODE	UNITS PER ASSY
-110B	D2549020704674		. . WASHBASIN UNIT NP used on 001B, 001G, 001H, 001S SEE 25-41-51-15G FOR DET		001
-110C	D2549030514674		. . WASHBASIN UNIT NP used on 001C, 001Q, 001R SEE 25-41-51-15G FOR DET		001
-110D	D2549010610074		. . WASHBASIN UNIT NP used on 001E, 001M SEE 25-41-51-15H FOR DET		001
-110E	D2549020706274		. . WASHBASIN UNIT NP used on 001F SEE 25-41-51-15C FOR DET		001
-110F	D2549010603674		. . WASHBASIN UNIT NP used on 001J SEE 25-41-51-15C FOR DET		001
-110G	D2549010603274		. . WASHBASIN UNIT NP used on 001K, 001P SEE 25-41-51-15F FOR DET		001
120A	D2549020607075		. . DOOR ASSY-WASHBASIN UNIT NP used on 001A, 001E, 001F, 001K, 001M, 001N, 001P SEE 25-41-51-16B FOR DET		001
-120B	D2549020607675		. . DOOR ASSY-WASHBASIN UNIT NP used on 001B, 001C, 001H, 001Q, 001R, 001S SEE 25-41-51-16C FOR DET		001
-120C	D2549010609875		. . DOOR ASSY-WASHBASIN UNIT NP used on 001D SEE 25-41-51-16C FOR DET		001

- ITEM NOT ILLUSTRATED

FIG. ITEM	PART NUMBER	AIRLINE STOCK NUMBER	NOMENCLATURE 1234567	EFF CODE	UNITS PER ASSY
-120D	D2549020610275		. . DOOR ASSY-WASHBASIN UNIT NP used on 001G SEE 25-41-51-16B FOR DET		001
-120E	D2549010603675		. . DOOR ASSY-WASHBASIN UNIT NP used on 001J, 001L SEE 25-41-51-16C FOR DET		001
130A	D2549030504876		. . PANEL ASSY-WASHBASIN UNIT NP used on 001A, 001E, 001F, 001M, 001N SEE 25-41-51-17C FOR DET		001
-130B	D2549020607676		. . PANEL ASSY-WASHBASIN UNIT NP used on 001B, 001C, 001H, 001Q, 001R, 001S SEE 25-41-51-17C FOR DET		001
-130C	D2549010609876		. . PANEL ASSY-WASHBASIN UNIT NP used on 001D SEE 25-41-51-17D FOR DET		001
-130D	D2549020610276		. . PANEL ASSY-WASHBASIN UNIT NP used on 001G SEE 25-41-51-17C FOR DET		001
-130E	D2549010603676		. . PANEL ASSY-WASHBASIN UNIT NP used on 001J, 001L SEE 25-41-51-17D FOR DET		001
-130F	D2549030511076		. . PANEL ASSY-WASHBASIN UNIT NP used on 001K, 001P SEE 25-41-51-17D FOR DET		001

- ITEM NOT ILLUSTRATED

FIG. ITEM	PART NUMBER	AIRLINE STOCK NUMBER	NOMENCLATURE 1234567		EFF CODE	UNITS PER ASSY
140A	D2549030504877		. . BIN-WASTE,CHUTE-WASTE AND EXTINGUISHER-FIRE used on 001A, 001B, 001C, 001D, 001E, 001F, 001G, 001H, 001J, 001K, 001L, 001M, 001N, 001P, 001Q, 001R, 001S SEE 25-41-51-180 FOR DET	NP		001
150A	D2549030504878		. . CABINET-SERVICE PRE VSB A2-254-25-054 PRE VSB A2-254-25-077 used on 001A, 001B, 001C, 001D, 001E, 001H, 001J, 001K, 001L, 001M, 001N, 001P, 001S SEE 25-41-51-19E FOR DET	NP		001
-150B	D2549030504078		. . CABINET-SERVICE used on 001F SEE 25-41-51-19E FOR DET	NP		001
-150C	D2549020708078		. . CABINET-SERVICE used on 001G SEE 25-41-51-19F FOR DET	NP		001
-150D	R22540162900278		. . CABINET-SERVICE POST VSB A2-254-25-077 used on 001Q SEE 25-41-51-19E FOR DET	NP		001
-150E	R22540119500078		. . CABINET-SERVICE POST VSB A2-254-25-054 used on 001R SEE 25-41-51-19E FOR DET	NP		001
160A	D2549010510679		. . TABLE-NURSING used on 001A, 001B, 001C, 001D, 001F, 001H, 001J, 001K, 001L, 001N, 001P, 001Q, 001R, 001S SEE 25-41-51-20A FOR DET	NP		001

- ITEM NOT ILLUSTRATED

FIG. ITEM	PART NUMBER	AIRLINE STOCK NUMBER	NOMENCLATURE 1234567		EFF CODE	UNITS PER ASSY
-160B	D2549010512679		. . TABLE-NURSING used on 001E, 001M SEE 25-41-51-20A FOR DET	NP		001
-160C	D2549030614679		. . TABLE-NURSING used on 001G SEE 25-41-51-20B FOR DET	NP		001
170A	D2549010514280		. . VENTILATION SYSTEM used on 001A, 001B, 001K, 001N, 001P, 001S SEE 25-41-51-21A FOR DET	NP		001
-170B	D2549030614680		. . VENTILATION SYSTEM used on 001G SEE 25-41-51-21B FOR DET	NP		001
-170C	D2549020802680		. . VENTILATION SYSTEM used on 001C, 001D, 001E, 001F, 001H, 001J, 001L, 001M, 001Q, 001R SEE 25-41-51-21B FOR DET	NP		001
180A	D2549010606081		. . WATER SYSTEM-POTABLE PRE VSB A2-254-25-077 used on 001A, 001B, 001C, 001D, 001E, 001G, 001H, 001J, 001L, 001M, 001N, 001R, 001S SEE 25-41-51-22D FOR DET	NP		001
-180B	D2549030608281		. . WATER SYSTEM-POTABLE used on 001F SEE 25-41-51-22G FOR DET	NP		001
-180C	D2549020713881		. . WATER SYSTEM-POTABLE used on 001K, 001P SEE 25-41-51-22H FOR DET	NP		001

- ITEM NOT ILLUSTRATED

FIG. ITEM	PART NUMBER	AIRLINE STOCK NUMBER	NOMENCLATURE 1234567		EFF CODE	UNITS PER ASSY
-180D	R22540162900281		. . WATER SYSTEM-POTABLE POST VSB A2-254-25-077 used on 001Q SEE 25-41-51-22D FOR DET	NP		001
190A	D2549010511082		. . WATER SYSTEM-WASTE PRE VSB A2-254-25-077 used on 001A, 001C, 001D, 001L, 001N, 001R SEE 25-41-51-23B FOR DET	NP		001
-190B	D2549030504882		. . WATER SYSTEM-WASTE used on 001B, 001E, 001M, 001S SEE 25-41-51-23B FOR DET	NP		001
-190C	D2549020507282		. . WATER SYSTEM-WASTE used on 001F, 001K, 001P SEE 25-41-51-23B FOR DET	NP		001
-190D	D2549030614682		. . WATER SYSTEM-WASTE used on 001G, 001H SEE 25-41-51-23D FOR DET	NP		001
-190E	D2549020800882		. . WATER SYSTEM-WASTE used on 001J SEE 25-41-51-23D FOR DET	NP		001
-190F	R22540162900282		. . WATER SYSTEM-WASTE POST VSB A2-254-25-077 used on 001Q SEE 25-41-51-23B FOR DET	NP		001
200A	D2549020514883		. . ELECTRICAL SYSTEM used on 001A, 001D, 001G, 001N SEE 25-41-51-26N FOR DET	NP		001
-200B	D2549020513083		. . ELECTRICAL SYSTEM used on 001B, 001C, 001E, 001F, 001H, 001J, 001L, 001M, 001Q, 001R, 001S SEE 25-41-51-26M FOR DET	NP		001

- ITEM NOT ILLUSTRATED

FIG. ITEM	PART NUMBER	AIRLINE STOCK NUMBER	NOMENCLATURE 1234567		EFF CODE	UNITS PER ASSY
-200C	D2549020510483		. . ELECTRICAL SYSTEM used on 001K SEE 25-41-51-26N FOR DET	NP		001
-200D	D2549030613783		. . ELECTRICAL SYSTEM used on 001P SEE 25-41-51-26N FOR DET	NP		001

- ITEM NOT ILLUSTRATED

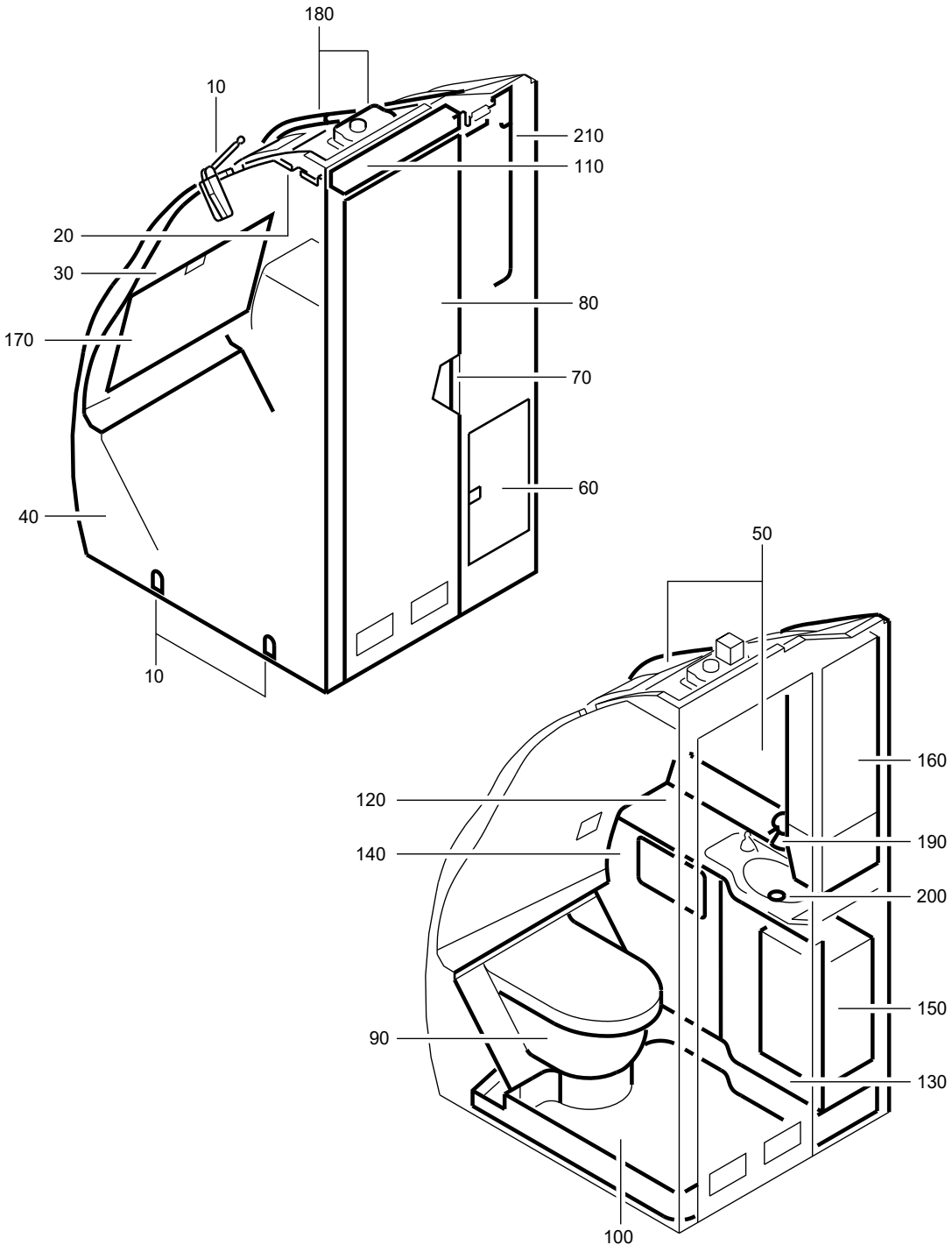

F_PL_254151_41_Q_01_00

LAVATORY A ASSY
Figure 41Q/EN254151SHEET41Q01

FIG. ITEM	PART NUMBER	AIRLINE STOCK NUMBER	NOMENCLATURE 1234567		EFF CODE	UNITS PER ASSY
41Q						
-001A	D2549020802800		. LAVATORY A ASSY SEE SIL 25-117 FOR DET			RF
010A	D2549030608061		. . ATTACHMENT-LAVATORY used on 001A SEE 25-41-51-02C FOR DET	NP		001
020A	D2549020602663		. . PANEL-CEILING used on 001A SEE 25-41-51-040 FOR DET	NP		001
030A	D2549010609464		. . WALL-REAR used on 001A SEE 25-41-51-05D FOR DET	NP		001
040A	D2549020802865		. . WALL-SIDE used on 001A SEE 25-41-51-06V FOR DET	NP		001
050A	D2549020802866		. . HOUSING used on 001A SEE 25-41-51-07M FOR DET	NP		001
060A	D2549020802868		. . DOOR-WASTE,EXTERNAL used on 001A SEE 25-41-51-090 FOR DET	NP		001
070A	D2549010500069		. . DOOR INSTL used on 001A SEE 25-41-51-100 FOR DET	NP		001
080A	A225400276-946		. . DOOR ASSY-SINGLE used on 001A SEE 25-41-51-11G FOR DET			001
090A	D2549010607071		. . TOILET UNIT AND TOILET SHROUD used on 001A SEE 25-41-51-12D FOR DET	NP		001

- ITEM NOT ILLUSTRATED

FIG. ITEM	PART NUMBER	AIRLINE STOCK NUMBER	NOMENCLATURE 1234567		EFF CODE	UNITS PER ASSY
100A	D2549020702272		. . PAN-FLOOR used on 001A SEE 25-41-51-13D FOR DET	NP		001
110A	D2549010512673		. . LIGHT-DOOR used on 001A SEE 25-41-51-140 FOR DET	NP		001
120A	D2549020704674		. . WASHBASIN UNIT used on 001A SEE 25-41-51-15G FOR DET	NP		001
130A	D2549020802875		. . DOOR ASSY-WASHBASIN UNIT used on 001A SEE 25-41-51-16D FOR DET	NP		001
140A	D2549030504876		. . PANEL ASSY-WASHBASIN UNIT used on 001A SEE 25-41-51-17C FOR DET	NP		001
150A	D2549030504877		. . BIN-WASTE,CHUTE-WASTE AND EXTINGUISHER-FIRE used on 001A SEE 25-41-51-180 FOR DET	NP		001
160A	D2549030504878		. . CABINET-SERVICE used on 001A SEE 25-41-51-19E FOR DET	NP		001
170A	D2549010510679		. . TABLE-NURSING used on 001A SEE 25-41-51-20A FOR DET	NP		001
180A	D2549010514280		. . VENTILATION SYSTEM used on 001A SEE 25-41-51-21A FOR DET	NP		001

- ITEM NOT ILLUSTRATED

FIG. ITEM	PART NUMBER	AIRLINE STOCK NUMBER	NOMENCLATURE 1234567		EFF CODE	UNITS PER ASSY
190A	D2549030608281		. . WATER SYSTEM-POTABLE used on 001A SEE 25-41-51-22G FOR DET	NP		001
200A	D2549020605682		. . WATER SYSTEM-WASTE used on 001A SEE 25-41-51-23B FOR DET	NP		001
210A	D2549020513083		. . ELECTRICAL SYSTEM used on 001A SEE 25-41-51-26M FOR DET	NP		001

- ITEM NOT ILLUSTRATED

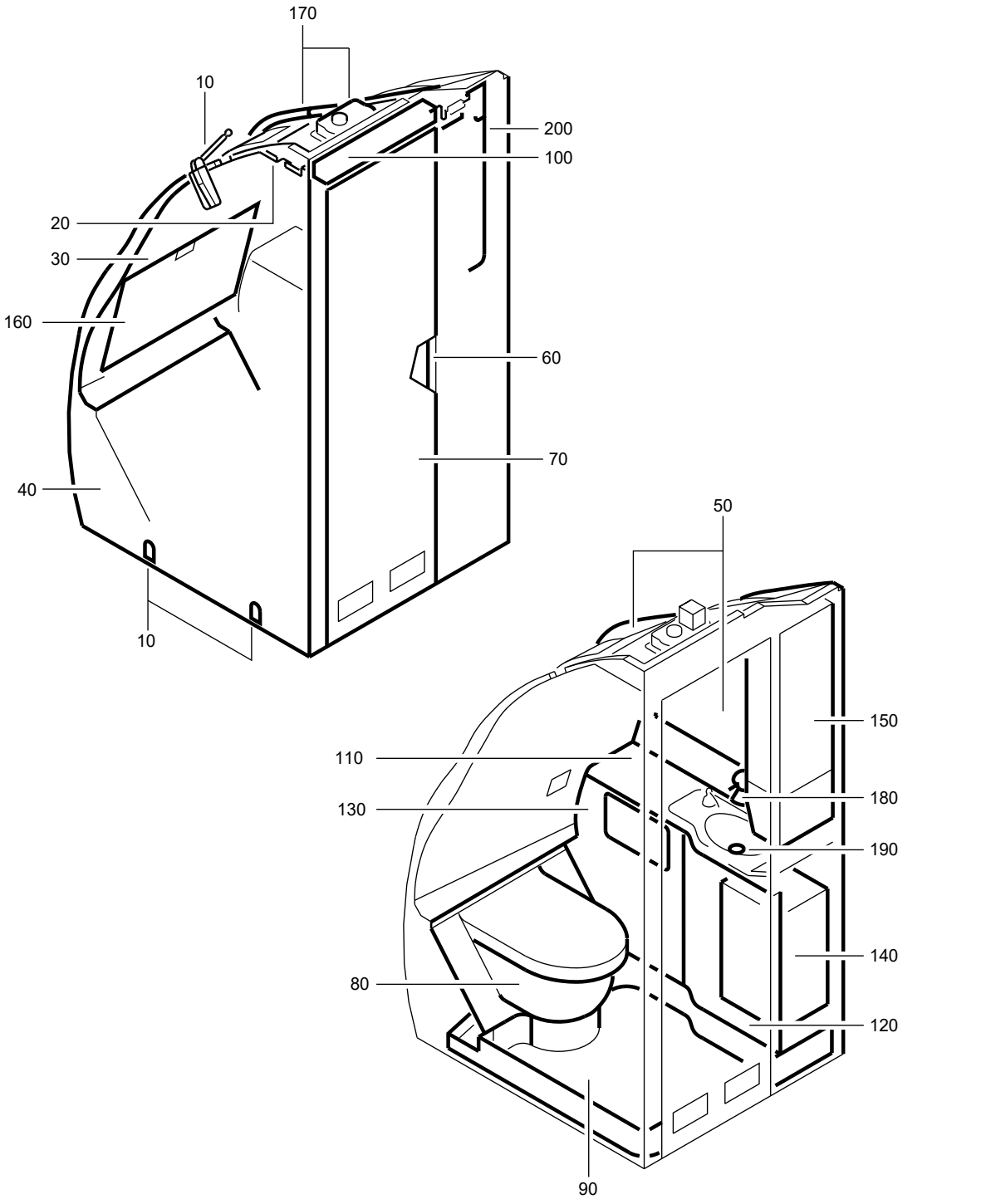

F_PL_254151_41_R_01_00

LAVATORY A ASSY
Figure 41R/EN254151SHEET41R01

FIG. ITEM	PART NUMBER	AIRLINE STOCK NUMBER	NOMENCLATURE 1234567	EFF CODE	UNITS PER ASSY
41R					
-001A	D2549020513600		. LAVATORY A ASSY SEE SIL 25-117 FOR DET		RF
-001B	D2549030613800		. LAVATORY A ASSY PRE VSB A2-254-25-080 SEE SIL 25-117 FOR DET		RF
-001C	D2549020800600		. LAVATORY A ASSY PRE VSB A2-254-25-042 PRE VSB A2-254-25-054 SEE SIL 25-117 FOR DET		RF
-001D	D2549030610000		. LAVATORY A ASSY PRE VSB A2-254-25-045 SEE SIL 25-117 FOR DET		RF
-001E	D2549020510600		. LAVATORY A ASSY SEE SIL 25-117 FOR DET		RF
-001F	D2549010608800		. LAVATORY A ASSY PRE VSB A2-254-25-080 SEE SIL 25-117 FOR DET		RF
-001G	D2549010607600		. LAVATORY A ASSY SEE SIL 25-117 FOR DET		RF
-001H	D2549020800000		. LAVATORY A ASSY SEE SIL 25-117 FOR DET VSB A2-254-25-032		RF
-001J	D2549020511600		. LAVATORY A ASSY SEE SIL 25-117 FOR DET		RF
-001K	D2549030610400		. LAVATORY A ASSY SEE SIL 25-117 FOR DET		RF
-001L	D2549030611000		. LAVATORY A ASSY SEE SIL 25-117 FOR DET		RF

- ITEM NOT ILLUSTRATED

FIG. ITEM	PART NUMBER	AIRLINE STOCK NUMBER	NOMENCLATURE 1234567	EFF CODE	UNITS PER ASSY
-001M	D2549020510800		. LAVATORY A ASSY SEE SIL 25-117 FOR DET		RF
-001N	D2549020800000		. LAVATORY A ASSY POST SB 25-1312 SEE SIL 25-117 FOR DET VSB A2-254-25-032		RF
-001P	R225401196-006		. LAVATORY A ASSY PRE VSB A2-254-25-130 POST VSB A2-254-25-042 SEE SIL 25-117 FOR DET		RF
-001Q	R225401196-038		. LAVATORY A ASSY SEE SIL 25-117 FOR DET POST VSB A2-254-25-054		RF
-001R	R225401145-008		. LAVATORY A ASSY POST VSB A2-254-25-080 PRE VSB A2-254-25-108 SEE SIL 25-117 FOR DET		RF
-001S	R225401172-018		. LAVATORY A ASSY POST VSB A2-254-25-080 SEE SIL 25-117 FOR DET		RF
-001T	R225401199-004		. LAVATORY A ASSY POST VSB A2-254-25-045 SEE SIL 25-117 FOR DET		RF
-001U	R225401145-014		. LAVATORY A ASSY POST VSB A2-254-25-108		RF
-001V	R225401196-052		. LAVATORY A ASSY POST VSB A2-254-25-130 SEE SIL 25-117 FOR DET		RF
010A	D2549020702661		. . ATTACHMENT-LAVATORY NP used on 001A SEE 25-41-51-02A FOR DET		001

- ITEM NOT ILLUSTRATED

FIG. ITEM	PART NUMBER	AIRLINE STOCK NUMBER	NOMENCLATURE 1234567		EFF CODE	UNITS PER ASSY
-010B	D2549030608061		. . ATTACHMENT-LAVATORY PRE VSB A2-254-25-130 used on 001B, 001C, 001F, 001G, 001H, 001J, 001K, 001L, 001P, 001Q, 001R, 001S, 001U SEE 25-41-51-02C FOR DET	NP		001
-010C	D2549010610261		. . ATTACHMENT-LAVATORY used on 001E SEE 25-41-51-02C FOR DET	NP		001
-010D	D2549020510861		. . ATTACHMENT-LAVATORY used on 001M SEE 25-41-51-020 FOR DET	NP		001
-010E	D2549010610061		. . ATTACHMENT-LAVATORY POST SB 25-1312 used on 001D, 001N, 001T SEE 25-41-51-02D FOR DET	NP		001
-010F	R22540119605261		. . ATTACHMENT-LAVATORY POST VSB A2-254-25-130 used on 001V SEE 25-41-51-02C FOR DET	NP		001
020A	D2549030505663		. . PANEL-CEILING used on 001A SEE 25-41-51-040 FOR DET	NP		001
-020B	D2549020602663		. . PANEL-CEILING PRE VSB A2-254-25-130 used on 001B, 001C, 001D, 001F, 001G, 001H, 001J, 001K, 001L, 001M, 001N, 001P, 001Q, 001R, 001S, 001T, 001U SEE 25-41-51-040 FOR DET	NP		001
-020C	D2549020710063		. . PANEL-CEILING used on 001E SEE 25-41-51-040 FOR DET	NP		001

- ITEM NOT ILLUSTRATED

FIG. ITEM	PART NUMBER	AIRLINE STOCK NUMBER	NOMENCLATURE 1234567		EFF CODE	UNITS PER ASSY
-020D	R22540119604663		. . PANEL-CEILING POST VSB A2-254-25-130 used on 001V SEE 25-41-51-040 FOR DET	NP		001
030A	D2549010610264		. . WALL-REAR used on 001A SEE 25-41-51-05G FOR DET	NP		001
-030B	D2549030613464		. . WALL-REAR PRE VSB A2-254-25-130 used on 001C, 001D, 001F, 001G, 001H, 001J, 001K, 001L, 001M, 001N, 001P, 001Q, 001R, 001T, 001U SEE 25-41-51-05C FOR DET	NP		001
-030C	D2549020510664		. . WALL-REAR used on 001E SEE 25-41-51-05G FOR DET	NP		001
-030D	D2549030608064		. . WALL-REAR used on 001B, 001S SEE 25-41-51-05C FOR DET	NP		001
-030E	R22540119605264		. . WALL-REAR POST VSB A2-254-25-130 used on 001V SEE 25-41-51-05C FOR DET	NP		001
040A	D2549020513665		. . WALL-SIDE used on 001A SEE 25-41-51-06W FOR DET	NP		001
-040B	D2549030613865		. . WALL-SIDE PRE VSB A2-254-25-080 used on 001B SEE 25-41-51-06W FOR DET	NP		001

- ITEM NOT ILLUSTRATED

FIG. ITEM	PART NUMBER	AIRLINE STOCK NUMBER	NOMENCLATURE 1234567		EFF CODE	UNITS PER ASSY
-040C	D2549020800665		. . WALL-SIDE PRE VSB A2-254-25-042 PRE VSB A2-254-25-054 used on 001C SEE 25-41-51-06X FOR DET	NP		001
-040D	D2549030610065		. . WALL-SIDE PRE VSB A2-254-25-045 used on 001D SEE 25-41-51-06X FOR DET	NP		001
-040E	D2549020510665		. . WALL-SIDE used on 001E SEE 25-41-51-06X FOR DET	NP		001
-040F	D2549010608865		. . WALL-SIDE PRE VSB A2-254-25-080 used on 001F SEE 25-41-51-06X FOR DET	NP		001
-040G	D2549010607665		. . WALL-SIDE used on 001G SEE 25-41-51-06X FOR DET	NP		001
-040H	D2549020800065		. . WALL-SIDE PRE VSB A2-254-25-032 used on 001H SEE 25-41-51-06X FOR DET	NP		001
-040J	D2549020511665		. . WALL-SIDE used on 001J SEE 25-41-51-06T FOR DET	NP		001
-040K	D2549030610465		. . WALL-SIDE used on 001K SEE 25-41-51-06W FOR DET	NP		001
-040L	D2549020513265		. . WALL-SIDE used on 001L SEE 25-41-51-06U FOR DET	NP		001

- ITEM NOT ILLUSTRATED

FIG. ITEM	PART NUMBER	AIRLINE STOCK NUMBER	NOMENCLATURE 1234567	EFF CODE	UNITS PER ASSY
-040M	D2549020510865		. . WALL-SIDE NP used on 001M SEE 25-41-51-06V FOR DET		001
-040N	D2549020800065		. . WALL-SIDE NP PRE VSB A2-254-25-032 used on 001N SEE 25-41-51-48A FOR DET		001
-040P	R22540119600665		. . WALL-SIDE NP PRE VSB A2-254-25-130 POST VSB A2-254-25-042 used on 001P SEE 25-41-51-06X FOR DET		001
-040Q	D2549020800065		. . WALL-SIDE NP POST VSB A2-254-25-032 used on 001H SEE 25-41-51-06X FOR DET		001
-040R	D2549020800065		. . WALL-SIDE NP POST VSB A2-254-25-032 used on 001N SEE 25-41-51-48A FOR DET		001
-040S	R22540119603865		. . WALL-SIDE NP POST VSB A2-254-25-054 used on 001Q SEE 25-41-51-06X FOR DET		001
-040T	R22540114500865		. . WALL-SIDE NP POST VSB A2-254-25-080 used on 001R, 001U SEE 25-41-51-06X FOR DET		001
-040U	R22540117201865		. . WALL-SIDE NP POST VSB A2-254-25-080 used on 001S SEE 25-41-51-06W FOR DET		001

- ITEM NOT ILLUSTRATED

FIG. ITEM	PART NUMBER	AIRLINE STOCK NUMBER	NOMENCLATURE 1234567	EFF CODE	UNITS PER ASSY
-040V	R22540119900465		. . WALL-SIDE NP POST VSB A2-254-25-045 used on 001T SEE 25-41-51-06X FOR DET		001
-040W	R22540119605265		. . WALL-SIDE NP POST VSB A2-254-25-130 used on 001V SEE 25-41-51-06X FOR DET		001
050A	D2549020513666		. . HOUSING NP used on 001A SEE 25-41-51-07L FOR DET		001
-050B	D2549030613866		. . HOUSING NP used on 001B, 001F, 001R, 001S, 001U SEE 25-41-51-07L FOR DET		001
-050C	D2549020800666		. . HOUSING NP PRE VSB A2-254-25-130 used on 001C, 001P, 001Q SEE 25-41-51-07N FOR DET		001
-050D	D2549030610066		. . HOUSING NP used on 001D, 001T SEE 25-41-51-07N FOR DET		001
-050E	D2549020510666		. . HOUSING NP used on 001E SEE 25-41-51-07N FOR DET		001
-050F	D2549010607666		. . HOUSING NP used on 001G SEE 25-41-51-07L FOR DET		001
-050G	D2549020800066		. . HOUSING NP used on 001H, 001J SEE 25-41-51-07Y FOR DET		001

- ITEM NOT ILLUSTRATED

FIG. ITEM	PART NUMBER	AIRLINE STOCK NUMBER	NOMENCLATURE 1234567		EFF CODE	UNITS PER ASSY
-050H	D2549030610466		. . HOUSING used on 001K SEE 25-41-51-07N FOR DET	NP		001
-050J	D2549030611066		. . HOUSING used on 001L SEE 25-41-51-07K FOR DET	NP		001
-050K	D2549020511866		. . HOUSING used on 001M SEE 25-41-51-07L FOR DET	NP		001
-050L	D2549010610066		. . HOUSING used on 001N SEE 25-41-51-49C FOR DET	NP		001
-050M	R22540119605266		. . HOUSING POST VSB A2-254-25-130 used on 001V SEE 25-41-51-07N FOR DET	NP		001
060A	D2549010500069		. . DOOR INSTL used on 001A, 001B, 001C, 001D, 001E, 001F, 001G, 001K, 001L, 001M, 001P, 001Q, 001R, 001S, 001T, 001U, 001V SEE 25-41-51-100 FOR DET	NP		001
-060B	D2549020401269		. . DOOR INSTL used on 001H, 001J, 001N SEE 25-41-51-10A FOR DET	NP		001
070A	A225400276-542		. . DOOR ASSY-SINGLE used on 001A SEE 25-41-51-11B FOR DET			001
-070B	A225400276-934		. . DOOR ASSY-SINGLE used on 001B, 001S SEE 25-41-51-11F FOR DET			001

- ITEM NOT ILLUSTRATED

FIG. ITEM	PART NUMBER	AIRLINE STOCK NUMBER	NOMENCLATURE 1234567	EFF CODE	UNITS PER ASSY
-070C	A225400276-952		. . DOOR ASSY-SINGLE PRE VSB A2-254-25-130 used on 001C, 001P, 001Q SEE 25-41-51-11G FOR DET		001
-070D	A225400276-960		. . DOOR ASSY-SINGLE used on 001D, 001T SEE 25-41-51-11J FOR DET		001
-070E	A225400278-518		. . DOOR ASSY-SINGLE used on 001E SEE 25-41-51-11K FOR DET		001
-070F	A225400276-592		. . DOOR ASSY-SINGLE used on 001F, 001R, 001U SEE 25-41-51-11E FOR DET		001
-070G	A225400276-562		. . DOOR ASSY-SINGLE used on 001G SEE 25-41-51-11D FOR DET		001
-070H	A2254002768574		. . DOOR ASSY-SINGLE PRE VSB A2-254-25-032 used on 001H, 001N SEE 25-41-51-11N FOR DET		001
-070J	A2254002768942		. . DOOR ASSY-SINGLE used on 001J SEE 25-41-51-11N FOR DET		001
-070K	A225400276-578		. . DOOR ASSY-SINGLE used on 001K SEE 25-41-51-11F FOR DET		001
-070L	A225400276-576		. . DOOR ASSY-SINGLE used on 001L SEE 25-41-51-11E FOR DET		001
-070M	A225400276-938		. . DOOR ASSY-SINGLE used on 001M SEE 25-41-51-11F FOR DET		001

- ITEM NOT ILLUSTRATED

FIG. ITEM	PART NUMBER	AIRLINE STOCK NUMBER	NOMENCLATURE 1234567		EFF CODE	UNITS PER ASSY
-070N	A2254002768574		. . DOOR ASSY-SINGLE POST VSB A2-254-25-032 used on 001H, 001N SEE 25-41-51-11N FOR DET			001
-070P	A225400263-990		. . DOOR ASSY-SINGLE POST VSB A2-254-25-130 used on 001V SEE 25-41-51-11G FOR DET			001
080A	D2549020513671		. . TOILET UNIT AND TOILET SHROUD used on 001A SEE 25-41-51-12E FOR DET	NP		001
-080B	D2549010607071		. . TOILET UNIT AND TOILET SHROUD PRE VSB A2-254-25-130 used on 001B, 001C, 001D, 001F, 001H, 001K, 001L, 001N, 001P, 001Q, 001R, 001S, 001T, 001U SEE 25-41-51-12D FOR DET	NP		001
-080C	D2549020510671		. . TOILET UNIT AND TOILET SHROUD used on 001E SEE 25-41-51-12E FOR DET	NP		001
-080D	D2549010607671		. . TOILET UNIT AND TOILET SHROUD used on 001G SEE 25-41-51-12E FOR DET	NP		001
-080E	D2549020514671		. . TOILET UNIT AND TOILET SHROUD used on 001J, 001M SEE 25-41-51-12E FOR DET	NP		001

- ITEM NOT ILLUSTRATED

FIG. ITEM	PART NUMBER	AIRLINE STOCK NUMBER	NOMENCLATURE 1234567		EFF CODE	UNITS PER ASSY
-080F	R22540119605071		. . TOILET UNIT AND TOILET SHROUD POST VSB A2-254-25-130 used on 001V SEE 25-41-51-12D FOR DET	NP		001
090A	D2549030504072		. . PAN-FLOOR used on 001A SEE 25-41-51-13B FOR DET	NP		001
-090B	D2549030611672		. . PAN-FLOOR used on 001B, 001S SEE 25-41-51-13H FOR DET	NP		001
-090C	D2549020704272		. . PAN-FLOOR PRE VSB A2-254-25-130 used on 001C, 001P, 001Q SEE 25-41-51-13D FOR DET	NP		001
-090D	D2549030606072		. . PAN-FLOOR used on 001D, 001T SEE 25-41-51-13E FOR DET	NP		001
-090E	D2549020510672		. . PAN-FLOOR used on 001E SEE 25-41-51-13J FOR DET	NP		001
-090F	D2549010513072		. . PAN-FLOOR used on 001F, 001R, 001U SEE 25-41-51-13C FOR DET	NP		001
-090G	D2549010605272		. . PAN-FLOOR used on 001G SEE 25-41-51-13E FOR DET	NP		001
-090H	D2549010514272		. . PAN-FLOOR used on 001H, 001J, 001N SEE 25-41-51-13T FOR DET	NP		001

- ITEM NOT ILLUSTRATED

FIG. ITEM	PART NUMBER	AIRLINE STOCK NUMBER	NOMENCLATURE 1234567	EFF CODE	UNITS PER ASSY
-090J	D2549020514672		. . PAN-FLOOR NP used on 001M SEE 25-41-51-13H FOR DET		001
-090K	D2549030511272		. . PAN-FLOOR NP used on 001K SEE 25-41-51-13D FOR DET		001
-090L	D2549020702272		. . PAN-FLOOR NP used on 001L SEE 25-41-51-13D FOR DET		001
-090M	R22540119604672		. . PAN-FLOOR NP POST VSB A2-254-25-130 used on 001V SEE 25-41-51-13D FOR DET		001
-100A	D2549010514073		. . LIGHT-DOOR NP used on 001A SEE 25-41-51-14A FOR DET		001
-100B	D2549010512673		. . LIGHT-DOOR NP PRE VSB A2-254-25-130 used on 001B, 001C, 001D, 001F, 001G, 001H, 001J, 001K, 001L, 001M, 001N, 001P, 001Q, 001R, 001S, 001T, 001U SEE 25-41-51-140 FOR DET		001
-100C	D2549020710073		. . LIGHT-DOOR NP used on 001E SEE 25-41-51-14A FOR DET		001
-100D	R22540119604673		. . LIGHT-DOOR NP POST VSB A2-254-25-130 used on 001V SEE 25-41-51-14C FOR DET		001

- ITEM NOT ILLUSTRATED

FIG. ITEM	PART NUMBER	AIRLINE STOCK NUMBER	NOMENCLATURE 1234567		EFF CODE	UNITS PER ASSY
110A	D2549030514674		. . WASHBASIN UNIT PRE VSB A2-254-25-130 used on 001A, 001C, 001E, 001J, 001P, 001Q SEE 25-41-51-15G FOR DET	NP		001
-110B	D2549030509874		. . WASHBASIN UNIT used on 001B, 001F, 001R, 001S, 001U SEE 25-41-51-15G FOR DET	NP		001
-110C	D2549020706274		. . WASHBASIN UNIT used on 001D, 001T SEE 25-41-51-15C FOR DET	NP		001
-110D	D2549030605874		. . WASHBASIN UNIT used on 001G SEE 25-41-51-15J FOR DET	NP		001
-110E	D2549020704674		. . WASHBASIN UNIT used on 001H, 001N SEE 25-41-51-15G FOR DET	NP		001
-110F	D2549030511274		. . WASHBASIN UNIT used on 001K SEE 25-41-51-15G FOR DET	NP		001
-110G	D2549020710274		. . WASHBASIN UNIT used on 001L SEE 25-41-51-15H FOR DET	NP		001
-110H	D2549020700674		. . WASHBASIN UNIT used on 001M SEE 25-41-51-15G FOR DET	NP		001
-110J	R22540119604674		. . WASHBASIN UNIT POST VSB A2-254-25-130 used on 001V SEE 25-41-51-15G FOR DET	NP		001

- ITEM NOT ILLUSTRATED

FIG. ITEM	PART NUMBER	AIRLINE STOCK NUMBER	NOMENCLATURE 1234567	EFF CODE	UNITS PER ASSY
120A	D2549010509475		. . DOOR ASSY-WASHBASIN UNIT NP used on 001A SEE 25-41-51-16B FOR DET		001
-120B	D2549020607075		. . DOOR ASSY-WASHBASIN UNIT NP PRE VSB A2-254-25-130 used on 001B, 001C, 001D, 001F, 001H, 001K, 001L, 001N, 001P, 001Q, 001R, 001S, 001T, 001U SEE 25-41-51-16B FOR DET		001
-120C	D2549020510675		. . DOOR ASSY-WASHBASIN UNIT NP used on 001E SEE 25-41-51-16D FOR DET		001
-120D	D2549030506275		. . DOOR ASSY-WASHBASIN UNIT NP used on 001G SEE 25-41-51-16C FOR DET		001
-120E	D2549020607675		. . DOOR ASSY-WASHBASIN UNIT NP used on 001J, 001M SEE 25-41-51-16C FOR DET		001
-120F	R22540119605075		. . DOOR ASSY-WASHBASIN UNIT NP POST VSB A2-254-25-130 used on 001V SEE 25-41-51-16B FOR DET		001
130A	D2549010509476		. . PANEL ASSY-WASHBASIN UNIT NP used on 001A SEE 25-41-51-17C FOR DET		001

- ITEM NOT ILLUSTRATED

FIG. ITEM	PART NUMBER	AIRLINE STOCK NUMBER	NOMENCLATURE 1234567		EFF CODE	UNITS PER ASSY
-130B	D2549030504876		. . PANEL ASSY-WASHBASIN UNIT PRE VSB A2-254-25-130 used on 001B, 001C, 001D, 001F, 001H, 001K, 001L, 001N, 001P, 001Q, 001R, 001S, 001T, 001U SEE 25-41-51-17C FOR DET	NP		001
-130C	D2549020510676		. . PANEL ASSY-WASHBASIN UNIT used on 001E SEE 25-41-51-17D FOR DET	NP		001
-130D	D2549030506276		. . PANEL ASSY-WASHBASIN UNIT used on 001G SEE 25-41-51-17C FOR DET	NP		001
-130E	D2549020607676		. . PANEL ASSY-WASHBASIN UNIT used on 001J, 001M SEE 25-41-51-17C FOR DET	NP		001
-130F	R22540119604676		. . PANEL ASSY-WASHBASIN UNIT POST VSB A2-254-25-130 used on 001V SEE 25-41-51-17C FOR DET	NP		001
140A	D2549030504877		. . BIN-WASTE,CHUTE-WASTE AND EXTINGUISHER-FIRE used on 001A, 001B, 001C, 001D, 001E, 001F, 001G, 001H, 001J, 001K, 001L, 001M, 001N, 001P, 001Q, 001R, 001S, 001T, 001U, 001V SEE 25-41-51-180 FOR DET	NP		001
150A	D2549030505678		. . CABINET-SERVICE used on 001A SEE 25-41-51-19E FOR DET	NP		001

- ITEM NOT ILLUSTRATED

FIG. ITEM	PART NUMBER	AIRLINE STOCK NUMBER	NOMENCLATURE 1234567	EFF CODE	UNITS PER ASSY
-150B	D2549030504878		. . CABINET-SERVICE NP PRE VSB A2-254-25-042 PRE VSB A2-254-25-032 PRE VSB A2-254-25-054 PRE VSB A2-254-25-045 PRE VSB A2-254-25-080 used on 001B, 001C, 001D, 001F, 001G, 001H, 001J, 001K, 001L, 001M, 001N SEE 25-41-51-19E FOR DET		001
-150C	D2549020510678		. . CABINET-SERVICE NP used on 001E SEE 25-41-51-19F FOR DET		001
-150D	R22540114200078		. . CABINET-SERVICE NP PRE VSB A2-254-25-130 POST VSB A2-254-25-042 used on 001P SEE 25-41-51-19E FOR DET		001
-150E	D2549030504878		. . CABINET-SERVICE NP POST VSB A2-254-25-032 used on 001H, 001N SEE 25-41-51-19E FOR DET		001
-150F	R22540119500078		. . CABINET-SERVICE NP POST VSB A2-254-25-054 used on 001Q SEE 25-41-51-19E FOR DET		001
-150G	R22540114500278		. . CABINET-SERVICE NP POST VSB A2-254-25-080 PRE VSB A2-254-25-108 used on 001R, 001S SEE 25-41-51-19E FOR DET		001
-150H	R22540119900278		. . CABINET-SERVICE NP POST VSB A2-254-25-045 used on 001T SEE 25-41-51-19E FOR DET		001

- ITEM NOT ILLUSTRATED

FIG. ITEM	PART NUMBER	AIRLINE STOCK NUMBER	NOMENCLATURE 1234567		EFF CODE	UNITS PER ASSY
-150J	R22540114501478		. . CABINET-SERVICE POST VSB A2-254-25-108 used on 001U SEE 25-41-51-19E FOR DET	NP		001
-150K	R22540119604678		. . CABINET-SERVICE POST VSB A2-254-25-130 used on 001V SEE 25-41-51-19E FOR DET	NP		001
160A	D2549020702679		. . TABLE-NURSING used on 001A SEE 25-41-51-20A FOR DET	NP		001
-160B	D2549010510679		. . TABLE-NURSING used on 001B, 001D, 001H, 001J, 001L, 001M, 001N, 001S, 001T SEE 25-41-51-20A FOR DET	NP		001
-160C	D2549010512679		. . TABLE-NURSING PRE VSB A2-254-25-130 used on 001C, 001F, 001G, 001K, 001P, 001Q, 001R, 001U SEE 25-41-51-20A FOR DET	NP		001
-160D	D2549020510679		. . TABLE-NURSING used on 001E SEE 25-41-51-20B FOR DET	NP		001
-160E	R22540119604679		. . TABLE-NURSING POST VSB A2-254-25-130 used on 001V SEE 25-41-51-20A FOR DET	NP		001
170A	D2549010610280		. . VENTILATION SYSTEM used on 001A SEE 25-41-51-21B FOR DET	NP		001

- ITEM NOT ILLUSTRATED

FIG. ITEM	PART NUMBER	AIRLINE STOCK NUMBER	NOMENCLATURE 1234567		EFF CODE	UNITS PER ASSY
-170B	D2549020802680		. . VENTILATION SYSTEM PRE VSB A2-254-25-130 used on 001B, 001C, 001D, 001F, 001G, 001H, 001J, 001K, 001L, 001M, 001N, 001P, 001Q, 001R, 001S, 001T, 001U SEE 25-41-51-21B FOR DET	NP		001
-170C	D2549020510680		. . VENTILATION SYSTEM used on 001E SEE 25-41-51-21B FOR DET	NP		001
-170D	R22540119605280		. . VENTILATION SYSTEM POST VSB A2-254-25-130 used on 001V SEE 25-41-51-21B FOR DET	NP		001
180A	D2549010606081		. . WATER SYSTEM-POTABLE PRE VSB A2-254-25-108 used on 001A, 001B, 001C, 001D, 001E, 001F, 001G, 001H, 001J, 001K, 001L, 001M, 001N, 001P, 001Q, 001R, 001S, 001T SEE 25-41-51-22D FOR DET	NP		001
-180B	R22540114501481		. . WATER SYSTEM-POTABLE POST VSB A2-254-25-108 used on 001U SEE 25-41-51-22D FOR DET	NP		001
-180C	R22540161900081		. . WATER SYSTEM-POTABLE used on 001V SEE 25-41-51-22D FOR DET	NP		001
190A	D2549020800882		. . WATER SYSTEM-WASTE used on 001A SEE 25-41-51-23D FOR DET	NP		001

- ITEM NOT ILLUSTRATED

FIG. ITEM	PART NUMBER	AIRLINE STOCK NUMBER	NOMENCLATURE 1234567		EFF CODE	UNITS PER ASSY
-190B	D2549010511082		. . WATER SYSTEM-WASTE PRE VSB A2-254-25-108 used on 001B, 001C, 001D, 001E, 001F, 001J, 001L, 001M, 001P, 001Q, 001R, 001S, 001T, 001V SEE 25-41-51-23B FOR DET	NP		001
-190C	D2549030504882		. . WATER SYSTEM-WASTE used on 001G, 001H, 001N SEE 25-41-51-23B FOR DET	NP		001
-190D	D2549030614682		. . WATER SYSTEM-WASTE used on 001K SEE 25-41-51-23D FOR DET	NP		001
-190E	R22540114501482		. . WATER SYSTEM-WASTE POST VSB A2-254-25-108 used on 001U SEE 25-41-51-23B FOR DET	NP		001
200A	D2549020512883		. . ELECTRICAL SYSTEM used on 001A SEE 25-41-51-26K FOR DET	NP		001
-200B	D2549030611683		. . ELECTRICAL SYSTEM used on 001B, 001S SEE 25-41-51-26M FOR DET	NP		001
-200C	D2549020513083		. . ELECTRICAL SYSTEM PRE VSB A2-254-25-130 used on 001C, 001D, 001E, 001G, 001H, 001J, 001K, 001L, 001M, 001N, 001P, 001Q, 001T SEE 25-41-51-26M FOR DET	NP		001
-200D	D2549010607283		. . ELECTRICAL SYSTEM used on 001F, 001R, 001U SEE 25-41-51-26M FOR DET	NP		001

- ITEM NOT ILLUSTRATED

FIG. ITEM	PART NUMBER	AIRLINE STOCK NUMBER	NOMENCLATURE 1234567	EFF CODE	UNITS PER ASSY
-200E	R22540119605083		. . ELECTRICAL SYSTEM NP POST VSB A2-254-25-130 used on 001V SEE 25-41-51-26M FOR DET		001

- ITEM NOT ILLUSTRATED

THIS PAGE IS INTENTIONALLY LEFT BLANK

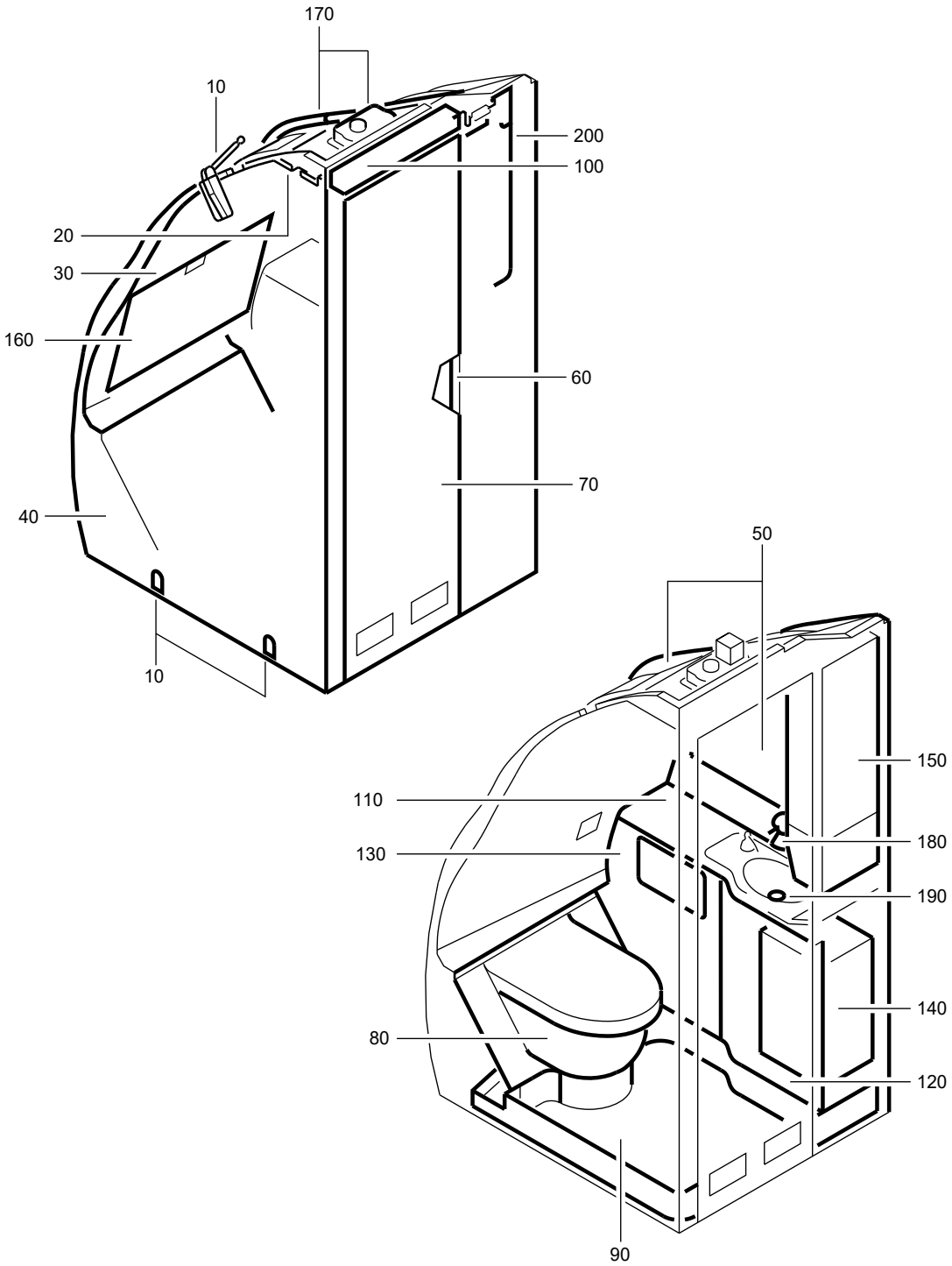

F_PL_254151_41_S_01_00

LAVATORY A ASSY
Figure 41S/EN254151SHEET41S01

FIG. ITEM	PART NUMBER	AIRLINE STOCK NUMBER	NOMENCLATURE 1234567	EFF CODE	UNITS PER ASSY
41S					
-001A	D2549020802600		. LAVATORY A ASSY SEE SIL 25-117 FOR DET		RF
-001B	D2549010609600		. LAVATORY A ASSY PRE VSB A2-254-25-131 SEE SIL 25-117 FOR DET		RF
-001C	D2549020803000		. LAVATORY A ASSY SEE SIL 25-117 FOR DET		RF
-001D	D2549030609800		. LAVATORY A ASSY SEE SIL 25-117 FOR DET		RF
-001E	D2549030400200		. LAVATORY A ASSY SEE SIL 25-117 FOR DET		RF
-001F	D2549010608600		. LAVATORY A ASSY SEE SIL 25-117 FOR DET		RF
-001G	D2549030614800		. LAVATORY A ASSY SEE SIL 25-117 FOR DET		RF
-001H	D2549020803400		. LAVATORY A ASSY SEE SIL 25-117 FOR DET		RF
-001J	D2549020803200		. LAVATORY A ASSY PRE VSB A2-254-25-083 SEE SIL 25-117 FOR DET		RF
-001K	D2549030612400		. LAVATORY A ASSY SEE SIL 25-117 FOR DET		RF
-001L	D2549020803600		. LAVATORY A ASSY SEE SIL 25-117 FOR DET		RF
-001M	D2549030400000		. LAVATORY A ASSY SEE SIL 25-117 FOR DET		RF

- ITEM NOT ILLUSTRATED

FIG. ITEM	PART NUMBER	AIRLINE STOCK NUMBER	NOMENCLATURE 1234567		EFF CODE	UNITS PER ASSY
-001N	D2549030400200		. LAVATORY A ASSY POST SB 25-1293 SEE SIL 25-117 FOR DET			RF
-001P	R225401693-000		. LAVATORY A ASSY POST VSB A2-254-25-083			RF
-001Q	R225401600-004		. LAVATORY A ASSY POST VSB A2-254-25-131 SEE SIL 25-117 FOR DET			RF
010A	D2549030608061		. . ATTACHMENT-LAVATORY used on 001A, 001B, 001C, 001D, 001E, 001F, 001G, 001H, 001J, 001K, 001L, 001M, 001N, 001P, 001Q SEE 25-41-51-02C FOR DET	NP		001
020A	D2549020602663		. . PANEL-CEILING used on 001A, 001B, 001C, 001D, 001E, 001F, 001G, 001H, 001J, 001K, 001L, 001M, 001N, 001P, 001Q SEE 25-41-51-040 FOR DET	NP		001
030A	D2549020802664		. . WALL-REAR used on 001A, 001D, 001E, 001G, 001J, 001K, 001L, 001M, 001N, 001P SEE 25-41-51-05C FOR DET	NP		001
-030B	D2549030613464		. . WALL-REAR used on 001B, 001C, 001H, 001Q SEE 25-41-51-05C FOR DET	NP		001
-030C	D2549030608064		. . WALL-REAR used on 001F SEE 25-41-51-05C FOR DET	NP		001

- ITEM NOT ILLUSTRATED

FIG. ITEM	PART NUMBER	AIRLINE STOCK NUMBER	NOMENCLATURE 1234567	EFF CODE	UNITS PER ASSY
040A	D2549020803465		. . WALL-SIDE NP used on 001H SEE 25-41-51-06X FOR DET		001
-040B	D2549010609665		. . WALL-SIDE NP used on 001B, 001Q SEE 25-41-51-06X FOR DET		001
-040C	D2549020711665		. . WALL-SIDE NP used on 001C SEE 25-41-51-06W FOR DET		001
-040D	D2549030609865		. . WALL-SIDE NP used on 001D, 001E, 001L SEE 25-41-51-06U FOR DET		001
-040E	D2549010608665		. . WALL-SIDE NP used on 001F SEE 25-41-51-06X FOR DET		001
-040F	D2549030614865		. . WALL-SIDE NP used on 001G SEE 25-41-51-06X FOR DET		001
-040G	D2549020803265		. . WALL-SIDE NP used on 001J, 001P SEE 25-41-51-06X FOR DET		001
-040H	D2549030612465		. . WALL-SIDE NP used on 001K SEE 25-41-51-06Y FOR DET		001
-040J	D2549030400065		. . WALL-SIDE NP used on 001M SEE 25-41-51-06X FOR DET		001
-040K	D2549030400265		. . WALL-SIDE NP used on 001N SEE 25-41-51-06U FOR DET		001

- ITEM NOT ILLUSTRATED

FIG. ITEM	PART NUMBER	AIRLINE STOCK NUMBER	NOMENCLATURE 1234567		EFF CODE	UNITS PER ASSY
-040L	D2549020802665		. . WALL-SIDE used on 001A SEE 25-41-51-48F FOR DET	NP		001
050A	D2549020802666		. . HOUSING used on 001A SEE 25-41-51-07K FOR DET	NP		001
-050B	D2549020801666		. . HOUSING used on 001B, 001Q SEE 25-41-51-07L FOR DET	NP		001
-050C	D2549020711666		. . HOUSING used on 001C SEE 25-41-51-07Y FOR DET	NP		001
-050D	D2549010607666		. . HOUSING used on 001D, 001E, 001N SEE 25-41-51-07L FOR DET	NP		001
-050E	D2549030608066		. . HOUSING used on 001F SEE 25-41-51-07K FOR DET	NP		001
-050F	D2549030614866		. . HOUSING used on 001G SEE 25-41-51-07N FOR DET	NP		001
-050G	D2549020803466		. . HOUSING used on 001H SEE 25-41-51-07N FOR DET	NP		001
-050H	D2549020803266		. . HOUSING used on 001J, 001P SEE 25-41-51-07N FOR DET	NP		001
-050J	D2549020800466		. . HOUSING used on 001K SEE 25-41-51-07N FOR DET	NP		001

- ITEM NOT ILLUSTRATED

FIG. ITEM	PART NUMBER	AIRLINE STOCK NUMBER	NOMENCLATURE 1234567	EFF CODE	UNITS PER ASSY
-050K	D2549020803666		. . HOUSING NP used on 001L SEE 25-41-51-07P FOR DET		001
-050L	D2549030400066		. . HOUSING NP used on 001M SEE 25-41-51-07P FOR DET		001
060A	D2549010500069		. . DOOR INSTL NP used on 001B, 001C, 001D, 001E, 001F, 001G, 001H, 001J, 001K, 001L, 001M, 001N, 001P, 001Q SEE 25-41-51-100 FOR DET		001
-060B	D2549020401269		. . DOOR INSTL NP used on 001A SEE 25-41-51-10A FOR DET		001
070A	A2254002768942		. . DOOR ASSY-SINGLE used on 001A SEE 25-41-51-11F FOR DET		001
-070B	A225400276-586		. . DOOR ASSY-SINGLE used on 001B, 001Q SEE 25-41-51-11E FOR DET		001
-070C	A225400276-968		. . DOOR ASSY-SINGLE used on 001C SEE 25-41-51-11J FOR DET		001
-070D	A225400276-946		. . DOOR ASSY-SINGLE used on 001D, 001E, 001N SEE 25-41-51-11G FOR DET		001
-070E	A225400278-800		. . DOOR ASSY-SINGLE used on 001F SEE 25-41-51-11H FOR DET		001

- ITEM NOT ILLUSTRATED

FIG. ITEM	PART NUMBER	AIRLINE STOCK NUMBER	NOMENCLATURE 1234567		EFF CODE	UNITS PER ASSY
-070F	A225400278-520		. . DOOR ASSY-SINGLE used on 001G SEE 25-41-51-11K FOR DET			001
-070G	A225400278-802		. . DOOR ASSY-SINGLE used on 001H SEE 25-41-51-11H FOR DET			001
-070H	A225400278-810		. . DOOR ASSY-SINGLE used on 001J, 001P SEE 25-41-51-11K FOR DET			001
-070J	A225400276-574		. . DOOR ASSY-SINGLE used on 001K SEE 25-41-51-11G FOR DET			001
-070K	A225400278-522		. . DOOR ASSY-SINGLE used on 001L SEE 25-41-51-11K FOR DET			001
-070L	A225400276-540		. . DOOR ASSY-SINGLE used on 001M SEE 25-41-51-11L FOR DET			001
080A	D2549020514671		. . TOILET UNIT AND TOILET SHROUD used on 001A, 001C, 001H, 001J, 001P SEE 25-41-51-12E FOR DET	NP		001
-080B	D2549010607071		. . TOILET UNIT AND TOILET SHROUD used on 001B, 001D, 001E, 001F, 001G, 001K, 001L, 001M, 001N, 001Q SEE 25-41-51-12D FOR DET	NP		001
-090A	D2549020514672		. . PAN-FLOOR used on 001C SEE 25-41-51-13H FOR DET	NP		001

- ITEM NOT ILLUSTRATED

FIG. ITEM	PART NUMBER	AIRLINE STOCK NUMBER	NOMENCLATURE 1234567	EFF CODE	UNITS PER ASSY
-090B	D2549020610672		. . PAN-FLOOR NP PRE VSB A2-254-25-131 used on 001B SEE 25-41-51-13C FOR DET		001
-090C	D2549020702272		. . PAN-FLOOR NP used on 001D, 001E, 001N SEE 25-41-51-13D FOR DET		001
-090D	D2549010606872		. . PAN-FLOOR NP used on 001F SEE 25-41-51-13G FOR DET		001
-090E	D2549020512472		. . PAN-FLOOR NP used on 001G SEE 25-41-51-13H FOR DET		001
-090F	D2549020803472		. . PAN-FLOOR NP used on 001H SEE 25-41-51-13G FOR DET		001
-090G	D2549020713672		. . PAN-FLOOR NP used on 001J, 001P SEE 25-41-51-13E FOR DET		001
-090H	D2549030612472		. . PAN-FLOOR NP used on 001K SEE 25-41-51-13G FOR DET		001
-090J	D2549020803672		. . PAN-FLOOR NP used on 001L SEE 25-41-51-13G FOR DET		001
-090K	D2549020505672		. . PAN-FLOOR NP used on 001M SEE 25-41-51-13H FOR DET		001
-090L	D2549010514272		. . PAN-FLOOR NP used on 001A SEE 25-41-51-13T FOR DET		001

- ITEM NOT ILLUSTRATED

FIG. ITEM	PART NUMBER	AIRLINE STOCK NUMBER	NOMENCLATURE 1234567		EFF CODE	UNITS PER ASSY
-090M	R22540113700072		. . PAN-FLOOR POST VSB A2-254-25-131 used on 001Q SEE 25-41-51-13C FOR DET	NP		001
100A	D2549010512673		. . LIGHT-DOOR used on 001A, 001B, 001C, 001D, 001E, 001F, 001G, 001H, 001J, 001K, 001L, 001M, 001N, 001P, 001Q SEE 25-41-51-140 FOR DET	NP		001
110A	D2549020802674		. . WASHBASIN UNIT used on 001A SEE 25-41-51-15K FOR DET	NP		001
-110B	D2549020704674		. . WASHBASIN UNIT used on 001B, 001J, 001P, 001Q SEE 25-41-51-15G FOR DET	NP		001
-110C	D2549030514674		. . WASHBASIN UNIT used on 001C, 001H, 001K, 001L, 001M SEE 25-41-51-15G FOR DET	NP		001
-110D	D2549020706274		. . WASHBASIN UNIT used on 001D, 001E, 001F, 001N SEE 25-41-51-15C FOR DET	NP		001
-110E	D2549010610074		. . WASHBASIN UNIT used on 001G SEE 25-41-51-15H FOR DET	NP		001
120A	D2549020607675		. . DOOR ASSY-WASHBASIN UNIT used on 001A, 001C, 001H, 001J, 001P SEE 25-41-51-16C FOR DET	NP		001

- ITEM NOT ILLUSTRATED

FIG. ITEM	PART NUMBER	AIRLINE STOCK NUMBER	NOMENCLATURE 1234567		EFF CODE	UNITS PER ASSY
-120B	D2549020607075		. . DOOR ASSY-WASHBASIN UNIT used on 001B, 001D, 001E, 001F, 001G, 001K, 001L, 001M, 001N, 001Q SEE 25-41-51-16B FOR DET	NP		001
130A	D2549020607676		. . PANEL ASSY-WASHBASIN UNIT used on 001A, 001C, 001H, 001J, 001P SEE 25-41-51-17C FOR DET	NP		001
-130B	D2549030504876		. . PANEL ASSY-WASHBASIN UNIT used on 001B, 001D, 001E, 001F, 001G, 001K, 001L, 001M, 001N, 001Q SEE 25-41-51-17C FOR DET	NP		001
140A	D2549030504877		. . BIN-WASTE,CHUTE-WASTE AND EXTINGUISHER-FIRE used on 001A, 001B, 001C, 001D, 001E, 001F, 001G, 001H, 001J, 001K, 001L, 001M, 001N, 001P, 001Q SEE 25-41-51-180 FOR DET	NP		001
150A	D2549030504878		. . CABINET-SERVICE used on 001A, 001C, 001D, 001E, 001G, 001H, 001J, 001K, 001L, 001N, 001P SEE 25-41-51-19E FOR DET	NP		001
-150B	D2549030505278		. . CABINET-SERVICE used on 001B, 001Q SEE 25-41-51-19E FOR DET	NP		001
-150C	D2549030504078		. . CABINET-SERVICE used on 001F, 001M SEE 25-41-51-19E FOR DET	NP		001

- ITEM NOT ILLUSTRATED

FIG. ITEM	PART NUMBER	AIRLINE STOCK NUMBER	NOMENCLATURE 1234567	EFF CODE	UNITS PER ASSY
160A	D2549010512679		. . TABLE-NURSING NP used on 001A, 001B, 001H, 001K, 001Q SEE 25-41-51-20A FOR DET		001
-160B	D2549010510679		. . TABLE-NURSING NP used on 001C, 001D, 001E, 001F, 001G, 001J, 001L, 001M, 001N, 001P SEE 25-41-51-20A FOR DET		001
170A	D2549020802680		. . VENTILATION SYSTEM NP used on 001A, 001B, 001C, 001D, 001E, 001F, 001G, 001H, 001J, 001K, 001L, 001M, 001N, 001P, 001Q SEE 25-41-51-21B FOR DET		001
180A	D2549010606081		. . WATER SYSTEM-POTABLE NP used on 001A, 001B, 001C, 001E, 001G, 001H, 001J, 001L, 001M, 001N, 001P, 001Q SEE 25-41-51-22D FOR DET		001
-180B	D2549030608281		. . WATER SYSTEM-POTABLE NP used on 001D, 001F, 001K SEE 25-41-51-22G FOR DET		001
190A	D2549010511082		. . WATER SYSTEM-WASTE NP used on 001A, 001C, 001E, 001H, 001L, 001M, 001N SEE 25-41-51-23B FOR DET		001
-190B	D2549030504882		. . WATER SYSTEM-WASTE NP used on 001B, 001G, 001J, 001P, 001Q SEE 25-41-51-23B FOR DET		001
-190C	D2549020507282		. . WATER SYSTEM-WASTE NP used on 001D, 001F, 001K SEE 25-41-51-23B FOR DET		001

- ITEM NOT ILLUSTRATED

FIG. ITEM	PART NUMBER	AIRLINE STOCK NUMBER	NOMENCLATURE 1234567		EFF CODE	UNITS PER ASSY
200A	D2549020513083		. . ELECTRICAL SYSTEM used on 001A, 001C, 001D, 001E, 001F, 001G, 001H, 001J, 001K, 001L, 001M, 001N, 001P SEE 25-41-51-26M FOR DET	NP		001
-200B	D2549020710683		. . ELECTRICAL SYSTEM used on 001B, 001Q SEE 25-41-51-26K FOR DET	NP		001

- ITEM NOT ILLUSTRATED

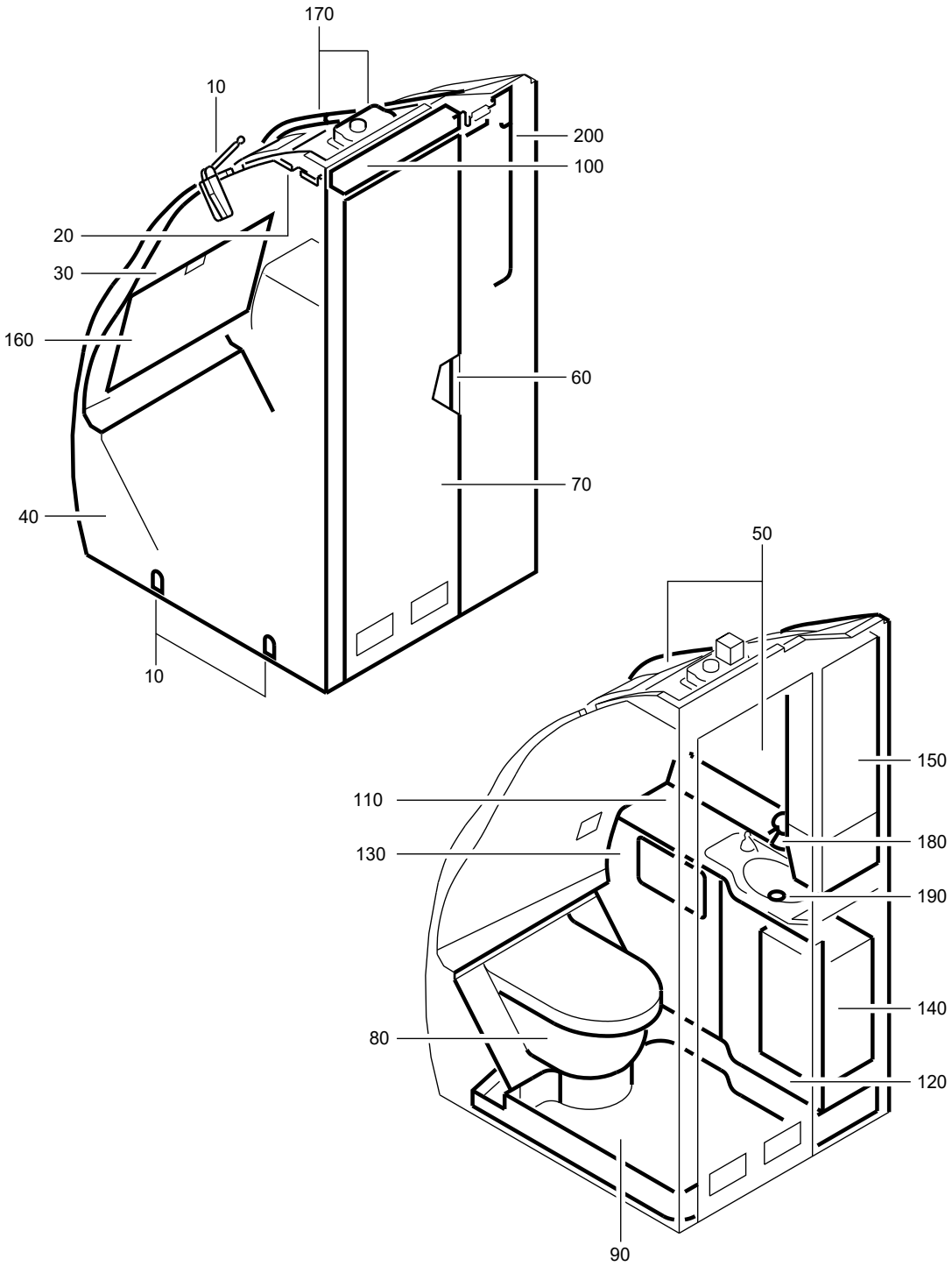

F_PL_254151_41_T_01_00

LAVATORY A ASSY
Figure 41T/EN254151SHEET41T01

FIG. ITEM	PART NUMBER	AIRLINE STOCK NUMBER	NOMENCLATURE 1234567	EFF CODE	UNITS PER ASSY
41T					
-001A	D2549020800400		. LAVATORY A ASSY SEE SIL 25-117 FOR DET		RF
-001B	D2549030403800		. LAVATORY A ASSY PRE VSB A2-254-25-080 SEE SIL 25-117 FOR DET		RF
-001C	D2549020801000		. LAVATORY A ASSY PRE VSB A2-254-25-046 SEE SIL 25-117 FOR DET		RF
-001D	D2549020513400		. LAVATORY A ASSY PRE VSB A2-254-25-131 SEE SIL 25-117 FOR DET		RF
-001E	D2549030612200		. LAVATORY A ASSY PRE VSB A2-254-25-045 SEE SIL 25-117 FOR DET		RF
-001F	D2549010501000		. LAVATORY A ASSY POST SB 25-1314 SEE SIL 25-117 FOR DET		RF
-001G	D2549010501000		. LAVATORY A ASSY POST SB 25-1314 SEE SIL 25-117 FOR DET		RF
-001H	D2549020500200		. LAVATORY A ASSY SEE SIL 25-117 FOR DET		RF
-001J	R225401172-000		. LAVATORY A ASSY POST VSB A2-254-25-080 SEE SIL 25-117 FOR DET		RF
-001K	R225401199-006		. LAVATORY A ASSY POST VSB A2-254-25-045 SEE SIL 25-117 FOR DET		RF
-001L	R225401134-012		. LAVATORY A ASSY POST VSB A2-254-25-046		RF

- ITEM NOT ILLUSTRATED

FIG. ITEM	PART NUMBER	AIRLINE STOCK NUMBER	NOMENCLATURE 1234567	EFF CODE	UNITS PER ASSY
-001M	R225401137-016		. LAVATORY A ASSY POST VSB A2-254-25-131		RF
010A	D2549030608061		. . ATTACHMENT-LAVATORY NP used on 001A, 001B, 001D, 001E, 001J, 001K, 001M SEE 25-41-51-02C FOR DET		001
-010B	D2549030612861		. . ATTACHMENT-LAVATORY NP used on 001C, 001L SEE 25-41-51-02C FOR DET		001
-010C	D2549020610061		. . ATTACHMENT-LAVATORY NP used on 001F, 001H SEE 25-41-51-02D FOR DET		001
-010D	D2549010500061		. . ATTACHMENT-LAVATORY NP used on 001G SEE 25-41-51-020 FOR DET		001
020A	D2549020602663		. . PANEL-CEILING NP used on 001A, 001B, 001D, 001E, 001J, 001K, 001M SEE 25-41-51-040 FOR DET		001
-020B	D2549020602863		. . PANEL-CEILING NP used on 001C, 001L SEE 25-41-51-040 FOR DET		001
-020C	D2549010500063		. . PANEL-CEILING NP used on 001F, 001G, 001H SEE 25-41-51-040 FOR DET		001
030A	D2549030613464		. . WALL-REAR NP used on 001A, 001D, 001E, 001K, 001M SEE 25-41-51-05C FOR DET		001
-030B	D2549030608064		. . WALL-REAR NP used on 001B, 001J SEE 25-41-51-05C FOR DET		001

- ITEM NOT ILLUSTRATED

FIG. ITEM	PART NUMBER	AIRLINE STOCK NUMBER	NOMENCLATURE 1234567		EFF CODE	UNITS PER ASSY
-030C	D2549030612864		. . WALL-REAR used on 001C, 001L SEE 25-41-51-05C FOR DET	NP		001
-030D	D2549010501064		. . WALL-REAR used on 001F SEE 25-41-51-05A FOR DET	NP		001
-030E	R254H155000664		. . WALL-REAR used on 001G SEE 25-41-51-05B FOR DET	NP		001
-030F	D2549010500064		. . WALL-REAR used on 001H SEE 25-41-51-050 FOR DET	NP		001
040A	D2549020800465		. . WALL-SIDE used on 001A SEE 25-41-51-06X FOR DET	NP		001
-040B	D2549030403865		. . WALL-SIDE PRE VSB A2-254-25-080 used on 001B SEE 25-41-51-06U FOR DET	NP		001
-040C	D2549030612865		. . WALL-SIDE used on 001C, 001L SEE 25-41-51-06U FOR DET	NP		001
-040D	D2549010609665		. . WALL-SIDE used on 001D, 001M SEE 25-41-51-06X FOR DET	NP		001
-040E	D2549030612265		. . WALL-SIDE PRE VSB A2-254-25-045 used on 001E SEE 25-41-51-06Y FOR DET	NP		001

- ITEM NOT ILLUSTRATED

FIG. ITEM	PART NUMBER	AIRLINE STOCK NUMBER	NOMENCLATURE 1234567		EFF CODE	UNITS PER ASSY
-040F	D2549010501065		. . WALL-SIDE POST SB 25-1314 used on 001F SEE 25-41-51-06B FOR DET	NP		001
-040G	D2549010501065		. . WALL-SIDE POST SB 25-1314 used on 001G SEE 25-41-51-48J FOR DET	NP		001
-040H	D2549020500265		. . WALL-SIDE used on 001H SEE 25-41-51-48J FOR DET	NP		001
-040J	R22540117200065		. . WALL-SIDE POST VSB A2-254-25-080 used on 001J SEE 25-41-51-06U FOR DET	NP		001
-040K	R22540119900665		. . WALL-SIDE POST VSB A2-254-25-045 used on 001K SEE 25-41-51-06Y FOR DET	NP		001
050A	D2549020800466		. . HOUSING used on 001A, 001E, 001K SEE 25-41-51-07N FOR DET	NP		001
-050B	D2549030403866		. . HOUSING used on 001B, 001J SEE 25-41-51-07N FOR DET	NP		001
-050C	D2549030612866		. . HOUSING used on 001C, 001L SEE 25-41-51-07K FOR DET	NP		001
-050D	D2549020801666		. . HOUSING used on 001D, 001M SEE 25-41-51-07L FOR DET	NP		001

- ITEM NOT ILLUSTRATED

FIG. ITEM	PART NUMBER	AIRLINE STOCK NUMBER	NOMENCLATURE 1234567		EFF CODE	UNITS PER ASSY
-050E	D2549010501066		. . HOUSING used on 001F SEE 25-41-51-07Y FOR DET	NP		001
-050F	D2549010501066		. . HOUSING POST SB 25-1314 used on 001G SEE 25-41-51-07A FOR DET	NP		001
-050G	D2549020500266		. . HOUSING used on 001H SEE 25-41-51-07B FOR DET	NP		001
060A	D2549010500069		. . DOOR INSTL used on 001A, 001B, 001C, 001D, 001E, 001J, 001K, 001L, 001M SEE 25-41-51-100 FOR DET	NP		001
-060B	D2549020401269		. . DOOR INSTL used on 001F, 001G, 001H SEE 25-41-51-10A FOR DET	NP		001
070A	A225400276-942		. . DOOR ASSY-SINGLE used on 001A, 001E, 001K SEE 25-41-51-11F FOR DET			001
-070B	A225400276-934		. . DOOR ASSY-SINGLE used on 001B, 001J SEE 25-41-51-11F FOR DET			001
-070C	A225400276-570		. . DOOR ASSY-SINGLE used on 001C, 001L SEE 25-41-51-11E FOR DET			001
-070D	A225400276-586		. . DOOR ASSY-SINGLE used on 001D, 001M SEE 25-41-51-11E FOR DET			001

- ITEM NOT ILLUSTRATED

FIG. ITEM	PART NUMBER	AIRLINE STOCK NUMBER	NOMENCLATURE 1234567		EFF CODE	UNITS PER ASSY
-070E	A2254002708510		. . DOOR ASSY-SINGLE used on 001F, 001G SEE 25-41-51-110 FOR DET			001
-070F	A2254002708506		. . DOOR ASSY-SINGLE used on 001H SEE 25-41-51-11Q FOR DET			001
080A	D2549020514671		. . TOILET UNIT AND TOILET SHROUD used on 001A, 001E, 001K SEE 25-41-51-12E FOR DET	NP		001
-080B	D2549010607071		. . TOILET UNIT AND TOILET SHROUD used on 001B, 001D, 001J, 001M SEE 25-41-51-12D FOR DET	NP		001
-080C	D2549030611271		. . TOILET UNIT AND TOILET SHROUD used on 001C, 001L SEE 25-41-51-12E FOR DET	NP		001
-080D	D2549010501071		. . TOILET UNIT AND TOILET SHROUD used on 001F, 001G SEE 25-41-51-12B FOR DET	NP		001
-080E	D2549020500271		. . TOILET UNIT AND TOILET SHROUD used on 001H SEE 25-41-51-12B FOR DET	NP		001
090A	D2549020514672		. . PAN-FLOOR used on 001A, 001E, 001K SEE 25-41-51-13H FOR DET	NP		001
-090B	D2549030507072		. . PAN-FLOOR used on 001B, 001J SEE 25-41-51-13C FOR DET	NP		001

- ITEM NOT ILLUSTRATED

FIG. ITEM	PART NUMBER	AIRLINE STOCK NUMBER	NOMENCLATURE 1234567	EFF CODE	UNITS PER ASSY
-090C	D2549030610672		. . PAN-FLOOR NP used on 001C, 001L SEE 25-41-51-13H FOR DET		001
-090D	D2549020512672		. . PAN-FLOOR NP PRE VSB A2-254-25-131 used on 001D SEE 25-41-51-13H FOR DET		001
-090E	D2549020603272		. . PAN-FLOOR NP used on 001F, 001G, 001H SEE 25-41-51-13U FOR DET		001
-090F	R22540113701672		. . PAN-FLOOR NP POST VSB A2-254-25-131 used on 001M SEE 25-41-51-13H FOR DET		001
100A	D2549010512673		. . LIGHT-DOOR NP used on 001A, 001B, 001D, 001E, 001J, 001K, 001M SEE 25-41-51-140 FOR DET		001
-100B	D2549020613673		. . LIGHT-DOOR NP used on 001C, 001L SEE 25-41-51-140 FOR DET		001
-100C	D2549010500073		. . LIGHT-DOOR NP used on 001F, 001G, 001H SEE 25-41-51-140 FOR DET		001
110A	D2549020802674		. . WASHBASIN UNIT NP used on 001A SEE 25-41-51-15K FOR DET		001
-110B	D2549030509874		. . WASHBASIN UNIT NP used on 001B, 001J SEE 25-41-51-15G FOR DET		001

- ITEM NOT ILLUSTRATED

FIG. ITEM	PART NUMBER	AIRLINE STOCK NUMBER	NOMENCLATURE 1234567	EFF CODE	UNITS PER ASSY
-110C	D2549020613674		. . WASHBASIN UNIT NP used on 001C, 001L SEE 25-41-51-15F FOR DET		001
-110D	D2549030506074		. . WASHBASIN UNIT NP used on 001D, 001M SEE 25-41-51-15C FOR DET		001
-110E	D2549020706274		. . WASHBASIN UNIT NP used on 001E, 001K SEE 25-41-51-15C FOR DET		001
-110F	D2549020500274		. . WASHBASIN UNIT NP used on 001F, 001G SEE 25-41-51-150 FOR DET		001
-110G	D2549020500274		. . WASHBASIN UNIT NP used on 001H SEE 25-41-51-150 FOR DET		001
120A	D2549020607675		. . DOOR ASSY-WASHBASIN UNIT NP used on 001A, 001E, 001K SEE 25-41-51-16C FOR DET		001
-120B	D2549020607075		. . DOOR ASSY-WASHBASIN UNIT NP used on 001B, 001D, 001J, 001M SEE 25-41-51-16B FOR DET		001
-120C	D2549030505475		. . DOOR ASSY-WASHBASIN UNIT NP used on 001C, 001L SEE 25-41-51-16B FOR DET		001
-120D	D2549010500475		. . DOOR ASSY-WASHBASIN UNIT NP used on 001F, 001G SEE 25-41-51-160 FOR DET		001

- ITEM NOT ILLUSTRATED

FIG. ITEM	PART NUMBER	AIRLINE STOCK NUMBER	NOMENCLATURE 1234567		EFF CODE	UNITS PER ASSY
-120E	D2549020500275		. . DOOR ASSY-WASHBASIN UNIT used on 001H SEE 25-41-51-160 FOR DET	NP		001
130A	D2549020607676		. . PANEL ASSY-WASHBASIN UNIT used on 001A, 001E, 001K SEE 25-41-51-17C FOR DET	NP		001
-130B	D2549030504876		. . PANEL ASSY-WASHBASIN UNIT used on 001B, 001D, 001J, 001M SEE 25-41-51-17C FOR DET	NP		001
-130C	D2549020506276		. . PANEL ASSY-WASHBASIN UNIT used on 001C, 001L SEE 25-41-51-17C FOR DET	NP		001
-130D	D2549010500476		. . PANEL ASSY-WASHBASIN UNIT used on 001F, 001G SEE 25-41-51-17A FOR DET	NP		001
-130E	D2549020500276		. . PANEL ASSY-WASHBASIN UNIT used on 001H SEE 25-41-51-17A FOR DET	NP		001
140A	D2549030504877		. . BIN-WASTE,CHUTE-WASTE AND EXTINGUISHER-FIRE used on 001A, 001B, 001C, 001D, 001E, 001J, 001K, 001L, 001M SEE 25-41-51-180 FOR DET	NP		001
-140B	D2549010500077		. . BIN-WASTE,CHUTE-WASTE AND EXTINGUISHER-FIRE used on 001F, 001G SEE 25-41-51-180 FOR DET	NP		001

- ITEM NOT ILLUSTRATED

FIG. ITEM	PART NUMBER	AIRLINE STOCK NUMBER	NOMENCLATURE 1234567	EFF CODE	UNITS PER ASSY
-140C	D2549020500077		. . BIN-WASTE,CHUTE-WASTE AND EXTINGUISHER-FIRE NP used on 001H SEE 25-41-51-180 FOR DET		001
150A	D2549030504878		. . CABINET-SERVICE NP PRE VSB A2-254-25-045 PRE VSB A2-254-25-080 used on 001A, 001B, 001E SEE 25-41-51-19E FOR DET		001
-150B	D2549020605678		. . CABINET-SERVICE NP used on 001C, 001L SEE 25-41-51-19E FOR DET		001
-150C	D2549030505278		. . CABINET-SERVICE NP used on 001D, 001M SEE 25-41-51-19E FOR DET		001
-150D	D2549010501078		. . CABINET-SERVICE NP used on 001F, 001G SEE 25-41-51-19C FOR DET		001
-150E	D2549020500278		. . CABINET-SERVICE NP used on 001H SEE 25-41-51-19A FOR DET		001
-150F	R22540114500278		. . CABINET-SERVICE NP POST VSB A2-254-25-080 used on 001J SEE 25-41-51-19E FOR DET		001
-150G	R22540119900278		. . CABINET-SERVICE NP POST VSB A2-254-25-045 used on 001K SEE 25-41-51-19E FOR DET		001
160A	D2549010510679		. . TABLE-NURSING NP used on 001A, 001B, 001E, 001J, 001K SEE 25-41-51-20A FOR DET		001

- ITEM NOT ILLUSTRATED

FIG. ITEM	PART NUMBER	AIRLINE STOCK NUMBER	NOMENCLATURE 1234567		EFF CODE	UNITS PER ASSY
-160B	D2549020613679		. . TABLE-NURSING used on 001C, 001L SEE 25-41-51-20A FOR DET	NP		001
-160C	D2549010512679		. . TABLE-NURSING used on 001D, 001F, 001G, 001M SEE 25-41-51-20A FOR DET	NP		001
-160D	D2549010500479		. . TABLE-NURSING used on 001H SEE 25-41-51-200 FOR DET	NP		001
170A	D2549020802680		. . VENTILATION SYSTEM used on 001A, 001B, 001D, 001E, 001J, 001K, 001M SEE 25-41-51-21B FOR DET	NP		001
-170B	D2549020801080		. . VENTILATION SYSTEM used on 001C, 001L SEE 25-41-51-21B FOR DET	NP		001
-170C	D2549010500080		. . VENTILATION SYSTEM used on 001F, 001G, 001H SEE 25-41-51-210 FOR DET	NP		001
180A	D2549010606081		. . WATER SYSTEM-POTABLE used on 001A, 001B, 001D, 001E, 001J, 001K, 001M SEE 25-41-51-22D FOR DET	NP		001
-180B	D2549030608281		. . WATER SYSTEM-POTABLE used on 001C, 001L SEE 25-41-51-22G FOR DET	NP		001
-180C	D2549010501081		. . WATER SYSTEM-POTABLE used on 001F, 001G SEE 25-41-51-220 FOR DET	NP		001
-180D	D2549010500081		. . WATER SYSTEM-POTABLE used on 001H SEE 25-41-51-220 FOR DET	NP		001

- ITEM NOT ILLUSTRATED

FIG. ITEM	PART NUMBER	AIRLINE STOCK NUMBER	NOMENCLATURE 1234567	EFF CODE	UNITS PER ASSY
190A	D2549010511082		. . WATER SYSTEM-WASTE NP used on 001A, 001B, 001E, 001J, 001K SEE 25-41-51-23B FOR DET		001
-190B	D2549020605682		. . WATER SYSTEM-WASTE NP used on 001C, 001L SEE 25-41-51-23B FOR DET		001
-190C	D2549030504882		. . WATER SYSTEM-WASTE NP used on 001D, 001M SEE 25-41-51-23B FOR DET		001
-190D	D2549010500082		. . WATER SYSTEM-WASTE NP used on 001F, 001G, 001H SEE 25-41-51-230 FOR DET		001
200A	D2549020513083		. . ELECTRICAL SYSTEM NP used on 001A, 001D, 001E, 001K, 001M SEE 25-41-51-26M FOR DET		001
-200B	D2549030611683		. . ELECTRICAL SYSTEM NP used on 001B, 001J SEE 25-41-51-26M FOR DET		001
-200C	D2549030402083		. . ELECTRICAL SYSTEM NP used on 001C, 001L SEE 25-41-51-26K FOR DET		001
-200D	D2549010501083		. . ELECTRICAL SYSTEM NP used on 001F, 001G SEE 25-41-51-260 FOR DET		001
-200E	D2549010500083		. . ELECTRICAL SYSTEM NP used on 001H SEE 25-41-51-260 FOR DET		001

- ITEM NOT ILLUSTRATED

THIS PAGE IS INTENTIONALLY LEFT BLANK

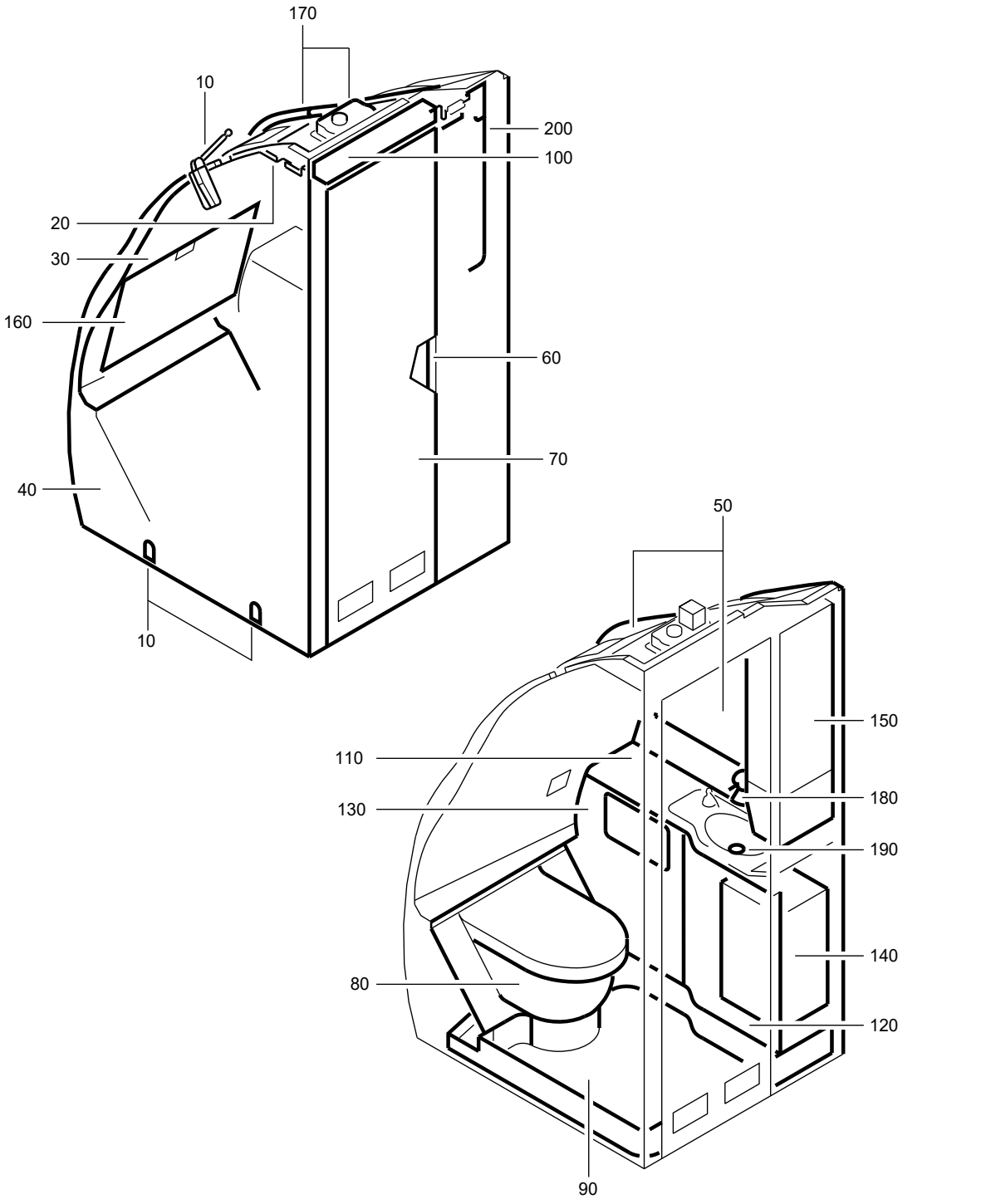

F_PL_254151_41_U_01_00

LAVATORY A ASSY
Figure 41U/EN254151SHEET41U01

FIG. ITEM	PART NUMBER	AIRLINE STOCK NUMBER	NOMENCLATURE 1234567		EFF CODE	UNITS PER ASSY
41U						
-001A	D2549020801200		. LAVATORY A ASSY SEE SIL 25-117 FOR DET			RF
-001B	D2549030612000		. LAVATORY A ASSY PRE VSB A2-254-25-045 SEE SIL 25-117 FOR DET			RF
-001C	D2549020800200		. LAVATORY A ASSY SEE SIL 25-117 FOR DET			RF
-001D	D2549010609200		. LAVATORY A ASSY SEE SIL 25-117 FOR DET			RF
-001E	D2549030400400		. LAVATORY A ASSY SEE SIL 25-117 FOR DET			RF
-001F	D2549030612000		. LAVATORY A ASSY SEE SIL 25-117 FOR DET			RF
-001G	R225401611-010		. LAVATORY A ASSY POST VSB A2-254-25-045 SEE SIL 25-117 FOR DET			RF
010A	D2549030608061		. . ATTACHMENT-LAVATORY used on 001C, 001D, 001E SEE 25-41-51-02C FOR DET	NP		001
-010B	D2549010610061		. . ATTACHMENT-LAVATORY used on 001A, 001B, 001F, 001G SEE 25-41-51-02D FOR DET	NP		001
020A	D2549020602663		. . PANEL-CEILING used on 001A, 001B, 001C, 001D, 001E, 001F, 001G SEE 25-41-51-040 FOR DET	NP		001
030A	D2549010609464		. . WALL-REAR used on 001A SEE 25-41-51-05D FOR DET	NP		001

- ITEM NOT ILLUSTRATED

FIG. ITEM	PART NUMBER	AIRLINE STOCK NUMBER	NOMENCLATURE 1234567	EFF CODE	UNITS PER ASSY
-030B	D2549020802664		. . WALL-REAR NP used on 001B, 001F, 001G SEE 25-41-51-05C FOR DET		001
-030C	D2549030613464		. . WALL-REAR NP used on 001C, 001D SEE 25-41-51-05C FOR DET		001
-030D	D2549030608064		. . WALL-REAR NP used on 001E SEE 25-41-51-05C FOR DET		001
040A	D2549020801265		. . WALL-SIDE NP used on 001A SEE 25-41-51-06Y FOR DET		001
-040B	D2549030612065		. . WALL-SIDE NP PRE VSB A2-254-25-045 used on 001B SEE 25-41-51-06Y FOR DET		001
-040C	D2549020800265		. . WALL-SIDE NP used on 001C SEE 25-41-51-06Y FOR DET		001
-040D	D2549010609265		. . WALL-SIDE NP used on 001D SEE 25-41-51-06Y FOR DET		001
-040E	D2549030608065		. . WALL-SIDE NP used on 001E SEE 25-41-51-06U FOR DET		001
-040F	D2549030612165		. . WALL-SIDE NP used on 001F SEE 25-41-51-06Y FOR DET		001
-040G	R22540161101065		. . WALL-SIDE NP POST VSB A2-254-25-045 used on 001G SEE 25-41-51-06Y FOR DET		001

- ITEM NOT ILLUSTRATED

FIG. ITEM	PART NUMBER	AIRLINE STOCK NUMBER	NOMENCLATURE 1234567		EFF CODE	UNITS PER ASSY
050A	D2549020801266		. . HOUSING used on 001A SEE 25-41-51-07P FOR DET	NP		001
-050B	D2549030612066		. . HOUSING used on 001B, 001G SEE 25-41-51-07N FOR DET	NP		001
-050C	D2549030400066		. . HOUSING used on 001C SEE 25-41-51-07P FOR DET	NP		001
-050D	D2549020511866		. . HOUSING used on 001D SEE 25-41-51-07L FOR DET	NP		001
-050E	D2549030400466		. . HOUSING used on 001E SEE 25-41-51-07P FOR DET	NP		001
-050F	D2549030612166		. . HOUSING used on 001F SEE 25-41-51-07N FOR DET	NP		001
060A	D2549010500069		. . DOOR INSTL used on 001A, 001B, 001C, 001D, 001E, 001G SEE 25-41-51-100 FOR DET	NP		001
-060B	D2549020401269		. . DOOR INSTL used on 001F SEE 25-41-51-10A FOR DET	NP		001
070A	A225400276-966		. . DOOR ASSY-SINGLE used on 001A SEE 25-41-51-11J FOR DET			001
-070B	A225400276-960		. . DOOR ASSY-SINGLE used on 001B, 001G SEE 25-41-51-11J FOR DET			001

- ITEM NOT ILLUSTRATED

FIG. ITEM	PART NUMBER	AIRLINE STOCK NUMBER	NOMENCLATURE 1234567		EFF CODE	UNITS PER ASSY
-070C	A225400278-502		. . DOOR ASSY-SINGLE used on 001C SEE 25-41-51-11H FOR DET			001
-070D	A225400278-510		. . DOOR ASSY-SINGLE used on 001D SEE 25-41-51-11H FOR DET			001
-070E	A225400278-800		. . DOOR ASSY-SINGLE used on 001E SEE 25-41-51-11H FOR DET			001
-070F	A2254002768960		. . DOOR ASSY-SINGLE used on 001B, 001F SEE 25-41-51-11J FOR DET			001
080A	D2549020513071		. . TOILET UNIT AND TOILET SHROUD used on 001A SEE 25-41-51-12D FOR DET	NP		001
-080B	D2549010607071		. . TOILET UNIT AND TOILET SHROUD used on 001B, 001D, 001E, 001F, 001G SEE 25-41-51-12D FOR DET	NP		001
-080C	D2549020514671		. . TOILET UNIT AND TOILET SHROUD used on 001C SEE 25-41-51-12E FOR DET	NP		001
090A	D2549020702272		. . PAN-FLOOR used on 001A, 001D SEE 25-41-51-13D FOR DET	NP		001
-090B	D2549030401472		. . PAN-FLOOR used on 001B, 001G SEE 25-41-51-13J FOR DET	NP		001

- ITEM NOT ILLUSTRATED

FIG. ITEM	PART NUMBER	AIRLINE STOCK NUMBER	NOMENCLATURE 1234567		EFF CODE	UNITS PER ASSY
-090C	D2549020511072		. . PAN-FLOOR used on 001C SEE 25-41-51-13H FOR DET	NP		001
-090D	D2549010606872		. . PAN-FLOOR used on 001E SEE 25-41-51-13G FOR DET	NP		001
-090E	D2549010514272		. . PAN-FLOOR used on 001F SEE 25-41-51-13T FOR DET	NP		001
100A	D2549010512673		. . LIGHT-DOOR used on 001A, 001B, 001C, 001D, 001E, 001F, 001G SEE 25-41-51-140 FOR DET	NP		001
110A	D2549030506074		. . WASHBASIN UNIT used on 001A, 001C SEE 25-41-51-15C FOR DET	NP		001
-110B	D2549020706274		. . WASHBASIN UNIT used on 001B, 001E, 001F, 001G SEE 25-41-51-15C FOR DET	NP		001
-110C	D2549020704674		. . WASHBASIN UNIT used on 001D SEE 25-41-51-15G FOR DET	NP		001
120A	D2549020605475		. . DOOR ASSY-WASHBASIN UNIT used on 001A SEE 25-41-51-16C FOR DET	NP		001
-120B	D2549020607075		. . DOOR ASSY-WASHBASIN UNIT used on 001B, 001D, 001E, 001F, 001G SEE 25-41-51-16B FOR DET	NP		001

- ITEM NOT ILLUSTRATED

FIG. ITEM	PART NUMBER	AIRLINE STOCK NUMBER	NOMENCLATURE 1234567		EFF CODE	UNITS PER ASSY
-120C	D2549020607675		. . DOOR ASSY-WASHBASIN UNIT used on 001C SEE 25-41-51-16C FOR DET	NP		001
130A	D2549020605476		. . PANEL ASSY-WASHBASIN UNIT used on 001A SEE 25-41-51-17D FOR DET	NP		001
-130B	D2549030504876		. . PANEL ASSY-WASHBASIN UNIT used on 001B, 001D, 001E, 001F, 001G SEE 25-41-51-17C FOR DET	NP		001
-130C	D2549020607676		. . PANEL ASSY-WASHBASIN UNIT used on 001C SEE 25-41-51-17C FOR DET	NP		001
140A	D2549030504877		. . BIN-WASTE,CHUTE-WASTE AND EXTINGUISHER-FIRE used on 001A, 001B, 001C, 001D, 001E, 001F, 001G SEE 25-41-51-180 FOR DET	NP		001
150A	D2549030504878		. . CABINET-SERVICE PRE VSB A2-254-25-045 used on 001A, 001B, 001C, 001F SEE 25-41-51-19E FOR DET	NP		001
-150B	D2549030505278		. . CABINET-SERVICE used on 001D SEE 25-41-51-19E FOR DET	NP		001
-150C	D2549030504078		. . CABINET-SERVICE used on 001E SEE 25-41-51-19E FOR DET	NP		001

- ITEM NOT ILLUSTRATED

FIG. ITEM	PART NUMBER	AIRLINE STOCK NUMBER	NOMENCLATURE 1234567		EFF CODE	UNITS PER ASSY
-150D	R22540119900278		. . CABINET-SERVICE POST VSB A2-254-25-045 used on 001G SEE 25-41-51-19E FOR DET	NP		001
160A	D2549010510679		. . TABLE-NURSING used on 001A, 001B, 001C, 001E, 001F, 001G SEE 25-41-51-20A FOR DET	NP		001
-160B	D2549010512679		. . TABLE-NURSING used on 001D SEE 25-41-51-20A FOR DET	NP		001
170A	D2549020802680		. . VENTILATION SYSTEM used on 001A, 001B, 001C, 001D, 001E, 001F, 001G SEE 25-41-51-21B FOR DET	NP		001
180A	D2549010606081		. . WATER SYSTEM-POTABLE used on 001A, 001B, 001C, 001D, 001F, 001G SEE 25-41-51-22D FOR DET	NP		001
-180B	D2549030608281		. . WATER SYSTEM-POTABLE used on 001E SEE 25-41-51-22G FOR DET	NP		001
190A	D2549030504882		. . WATER SYSTEM-WASTE used on 001A, 001C, 001D SEE 25-41-51-23B FOR DET	NP		001
-190B	D2549010511082		. . WATER SYSTEM-WASTE used on 001B, 001F, 001G SEE 25-41-51-23B FOR DET	NP		001
-190C	D2549020507282		. . WATER SYSTEM-WASTE used on 001E SEE 25-41-51-23B FOR DET	NP		001

- ITEM NOT ILLUSTRATED

FIG. ITEM	PART NUMBER	AIRLINE STOCK NUMBER	NOMENCLATURE 1234567	EFF CODE	UNITS PER ASSY
200A	D2549020513083		. . ELECTRICAL SYSTEM NP used on 001A, 001B, 001C, 001D, 001E, 001F, 001G SEE 25-41-51-26M FOR DET		001

- ITEM NOT ILLUSTRATED

THIS PAGE IS INTENTIONALLY LEFT BLANK

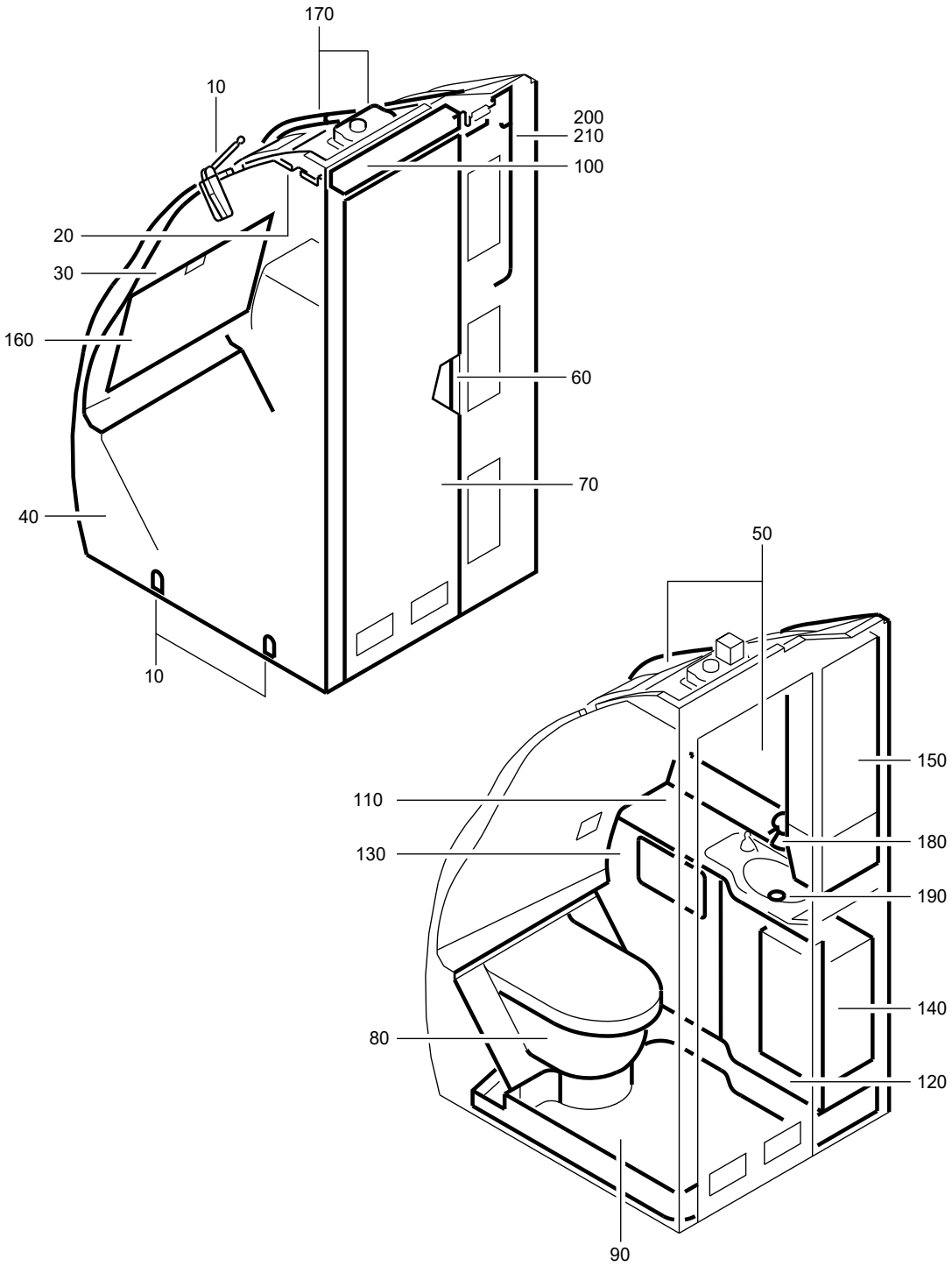

F_PL_254151_41_V_01_00

LAVATORY A ASSY
Figure 41V/EN254151SHEET41V01

FIG. ITEM	PART NUMBER	AIRLINE STOCK NUMBER	NOMENCLATURE 1234567	EFF CODE	UNITS PER ASSY
41V					
-001A	D2549030603200		. LAVATORY A ASSY SEE SIL 25-117 FOR DET		RF
-001B	D2549030402600		. LAVATORY A ASSY SEE SIL 25-117 FOR DET		RF
-001C	D2549030402800		. LAVATORY A ASSY SEE SIL 25-117 FOR DET		RF
-001D	D2549020801400		. LAVATORY A ASSY PRE VSB A2-254-25-039 SEE SIL 25-117 FOR DET		RF
-001E	D2549020809800		. LAVATORY A ASSY SEE SIL 25-117 FOR DET		RF
-001F	D2549020809000		. LAVATORY A ASSY SEE SIL 25-117 FOR DET		RF
-001G	D2549020804000		. LAVATORY A ASSY SEE SIL 25-117 FOR DET		RF
-001H	D2549010612200		. LAVATORY A ASSY SEE SIL 25-117 FOR DET		RF
-001J	D2549030401400		. LAVATORY A ASSY PRE VSB A2-254-25-035 SEE SIL 25-117 FOR DET		RF
-001K	D2549020802400		. LAVATORY A ASSY SEE SIL 25-117 FOR DET		RF
-001L	D2549020714000		. LAVATORY A ASSY SEE SIL 25-117 FOR DET		RF
-001M	D2549020808800		. LAVATORY A ASSY SEE SIL 25-117 FOR DET		RF
-001N	D2549030401400		. LAVATORY A ASSY SEE SIL 25-117 FOR DET		RF

- ITEM NOT ILLUSTRATED

FIG. ITEM	PART NUMBER	AIRLINE STOCK NUMBER	NOMENCLATURE 1234567		EFF CODE	UNITS PER ASSY
-001P	R225401622-000		. LAVATORY A ASSY POST VSB A2-254-25-039 SEE SIL 25-117 FOR DET			RF
-001Q	R225401611-004		. LAVATORY A ASSY POST VSB A2-254-25-035			RF
010A	D2549030608061		. . ATTACHMENT-LAVATORY used on 001A, 001B, 001C, 001D, 001F, 001G, 001H, 001P SEE 25-41-51-02C FOR DET	NP		001
-010B	D2549020802461		. . ATTACHMENT-LAVATORY used on 001K SEE 25-41-51-02C FOR DET	NP		001
-010C	D2549030401061		. . ATTACHMENT-LAVATORY used on 001L SEE 25-41-51-02D FOR DET	NP		001
-010D	D2549010610061		. . ATTACHMENT-LAVATORY used on 001E, 001J, 001M, 001N, 001Q SEE 25-41-51-02D FOR DET	NP		001
020A	D2549020602663		. . PANEL-CEILING used on 001A, 001B, 001C, 001D, 001E, 001F, 001H, 001L, 001P SEE 25-41-51-040 FOR DET	NP		001
-020B	D2549020710063		. . PANEL-CEILING used on 001K SEE 25-41-51-040 FOR DET	NP		001
-020C	D2549030401463		. . PANEL-CEILING used on 001G, 001J, 001M, 001N, 001Q SEE 25-41-51-040 FOR DET	NP		001

- ITEM NOT ILLUSTRATED

FIG. ITEM	PART NUMBER	AIRLINE STOCK NUMBER	NOMENCLATURE 1234567		EFF CODE	UNITS PER ASSY
030A	D2549030603264		. . WALL-REAR used on 001A, 001C, 001D, 001E, 001F, 001J, 001L, 001M, 001N, 001P, 001Q SEE 25-41-51-05G FOR DET	NP		001
-030B	D2549020804064		. . WALL-REAR used on 001B, 001G, 001H SEE 25-41-51-05G FOR DET	NP		001
-030C	D2549020802464		. . WALL-REAR used on 001K SEE 25-41-51-05G FOR DET	NP		001
040A	D2549030603265		. . WALL-SIDE used on 001A SEE 25-41-51-06Y FOR DET	NP		001
-040B	D2549030402665		. . WALL-SIDE used on 001B SEE 25-41-51-06Y FOR DET	NP		001
-040C	D2549030402865		. . WALL-SIDE used on 001C SEE 25-41-51-06Y FOR DET	NP		001
-040D	D2549020801465		. . WALL-SIDE used on 001D, 001P SEE 25-41-51-480 FOR DET	NP		001
-040E	D2549020809865		. . WALL-SIDE used on 001E SEE 25-41-51-06R FOR DET	NP		001
-040F	D2549020809065		. . WALL-SIDE used on 001F SEE 25-41-51-06Z FOR DET	NP		001
-040G	D2549020804065		. . WALL-SIDE used on 001G, 001H SEE 25-41-51-06Z FOR DET	NP		001

- ITEM NOT ILLUSTRATED

FIG. ITEM	PART NUMBER	AIRLINE STOCK NUMBER	NOMENCLATURE 1234567		EFF CODE	UNITS PER ASSY
-040H	D2549030401465		. . WALL-SIDE used on 001J, 001Q SEE 25-41-51-06Z FOR DET	NP		001
-040J	D2549020802465		. . WALL-SIDE used on 001K SEE 25-41-51-06Z FOR DET	NP		001
-040K	D2549020714065		. . WALL-SIDE used on 001L SEE 25-41-51-06Z FOR DET	NP		001
-040L	D2549010611065		. . WALL-SIDE used on 001M SEE 25-41-51-06Z FOR DET	NP		001
-040M	D2549030401565		. . WALL-SIDE used on 001N SEE 25-41-51-06Z FOR DET	NP		001
050A	D2549030603266		. . HOUSING used on 001A SEE 25-41-51-07Q FOR DET	NP		001
-050B	D2549030402666		. . HOUSING used on 001B, 001H SEE 25-41-51-07Q FOR DET	NP		001
-050C	D2549030402866		. . HOUSING used on 001C SEE 25-41-51-07Q FOR DET	NP		001
-050D	D2549020801466		. . HOUSING used on 001D, 001P SEE 25-41-51-07R FOR DET	NP		001
-050E	D2549020809866		. . HOUSING used on 001E SEE 25-41-51-07Q FOR DET	NP		001

- ITEM NOT ILLUSTRATED

FIG. ITEM	PART NUMBER	AIRLINE STOCK NUMBER	NOMENCLATURE 1234567		EFF CODE	UNITS PER ASSY
-050F	D2549020809066		. . HOUSING used on 001F SEE 25-41-51-07R FOR DET	NP		001
-050G	D2549020714066		. . HOUSING used on 001L SEE 25-41-51-07R FOR DET	NP		001
-050H	D2549020802466		. . HOUSING used on 001K SEE 25-41-51-07Q FOR DET	NP		001
-050J	D2549030401466		. . HOUSING used on 001J, 001Q SEE 25-41-51-07R FOR DET	NP		001
-050K	D2549020808866		. . HOUSING used on 001M SEE 25-41-51-07R FOR DET	NP		001
-050L	D2549020804066		. . HOUSING used on 001G SEE 25-41-51-07S FOR DET	NP		001
-050M	D2549030401566		. . HOUSING used on 001N SEE 25-41-51-07R FOR DET	NP		001
060A	D2549010500069		. . DOOR INSTL used on 001A, 001B, 001C, 001D, 001E, 001F, 001G, 001H, 001J, 001K, 001L, 001M, 001P, 001Q SEE 25-41-51-100 FOR DET	NP		001
-060B	D2549020401269		. . DOOR INSTL used on 001N SEE 25-41-51-10A FOR DET	NP		001

- ITEM NOT ILLUSTRATED

FIG. ITEM	PART NUMBER	AIRLINE STOCK NUMBER	NOMENCLATURE 1234567	EFF CODE	UNITS PER ASSY
070A	A225400276-540		. . DOOR ASSY-SINGLE used on 001A SEE 25-41-51-11L FOR DET		001
-070B	A225400278-800		. . DOOR ASSY-SINGLE used on 001B, 001G, 001H SEE 25-41-51-11H FOR DET		001
-070C	A225400276-574		. . DOOR ASSY-SINGLE used on 001C SEE 25-41-51-11E FOR DET		001
-070D	A225400278-514		. . DOOR ASSY-SINGLE PRE VSB A2-254-25-039 used on 001D SEE 25-41-51-11H FOR DET		001
-070E	A225400278-806		. . DOOR ASSY-SINGLE used on 001E SEE 25-41-51-11H FOR DET		001
-070F	A225400278-810		. . DOOR ASSY-SINGLE used on 001F SEE 25-41-51-11K FOR DET		001
-070G	A225400276-960		. . DOOR ASSY-SINGLE used on 001J, 001Q SEE 25-41-51-11J FOR DET		001
-070H	A225400276-982		. . DOOR ASSY-SINGLE used on 001K SEE 25-41-51-11J FOR DET		001
-070J	A225400276-948		. . DOOR ASSY-SINGLE used on 001L SEE 25-41-51-11G FOR DET		001
-070K	A225400276-596		. . DOOR ASSY-SINGLE used on 001M SEE 25-41-51-11G FOR DET		001

- ITEM NOT ILLUSTRATED

FIG. ITEM	PART NUMBER	AIRLINE STOCK NUMBER	NOMENCLATURE 1234567		EFF CODE	UNITS PER ASSY
-070L	A2254002768960		. . DOOR ASSY-SINGLE used on 001J, 001N, 001Q SEE 25-41-51-11J FOR DET			001
-070M	A225400278-578		. . DOOR ASSY-SINGLE POST VSB A2-254-25-039 used on 001P SEE 25-41-51-11H FOR DET			001
080A	D2549010607071		. . TOILET UNIT AND TOILET SHROUD used on 001A, 001B, 001C, 001D, 001G, 001H, 001J, 001L, 001N, 001P, 001Q SEE 25-41-51-12D FOR DET	NP		001
-080B	D2549020514871		. . TOILET UNIT AND TOILET SHROUD used on 001E SEE 25-41-51-12E FOR DET	NP		001
-080C	D2549020514671		. . TOILET UNIT AND TOILET SHROUD used on 001F SEE 25-41-51-12E FOR DET	NP		001
-080D	D2549020510671		. . TOILET UNIT AND TOILET SHROUD used on 001K SEE 25-41-51-12E FOR DET	NP		001
-080E	D2549020512271		. . TOILET UNIT AND TOILET SHROUD used on 001M SEE 25-41-51-12D FOR DET	NP		001
090A	D2549020505672		. . PAN-FLOOR PRE VSB A2-254-25-039 used on 001A, 001D SEE 25-41-51-13H FOR DET	NP		001

- ITEM NOT ILLUSTRATED

FIG. ITEM	PART NUMBER	AIRLINE STOCK NUMBER	NOMENCLATURE 1234567		EFF CODE	UNITS PER ASSY
-090B	D2549010606872		. . PAN-FLOOR used on 001B, 001G, 001H SEE 25-41-51-13G FOR DET	NP		001
-090C	D2549030612472		. . PAN-FLOOR used on 001C SEE 25-41-51-13G FOR DET	NP		001
-090D	D2549030602472		. . PAN-FLOOR used on 001E SEE 25-41-51-13T FOR DET	NP		001
-090E	D2549020713672		. . PAN-FLOOR used on 001F SEE 25-41-51-13E FOR DET	NP		001
-090F	D2549030401472		. . PAN-FLOOR used on 001J, 001Q SEE 25-41-51-13J FOR DET	NP		001
-090G	D2549020806472		. . PAN-FLOOR used on 001K SEE 25-41-51-13L FOR DET	NP		001
-090H	D2549020714072		. . PAN-FLOOR used on 001L SEE 25-41-51-13D FOR DET	NP		001
-090J	D2549020808872		. . PAN-FLOOR used on 001M SEE 25-41-51-13J FOR DET	NP		001
-090K	D2549010514272		. . PAN-FLOOR used on 001N SEE 25-41-51-13T FOR DET	NP		001
-090L	R22540162200072		. . PAN-FLOOR POST VSB A2-254-25-039 used on 001P SEE 25-41-51-13H FOR DET	NP		001

- ITEM NOT ILLUSTRATED

FIG. ITEM	PART NUMBER	AIRLINE STOCK NUMBER	NOMENCLATURE 1234567		EFF CODE	UNITS PER ASSY
100A	D2549010512673		. . LIGHT-DOOR used on 001A, 001B, 001C, 001D, 001E, 001F, 001G, 001H, 001J, 001L, 001M, 001N, 001P, 001Q SEE 25-41-51-140 FOR DET	NP		001
-100B	D2549020710073		. . LIGHT-DOOR used on 001K SEE 25-41-51-14A FOR DET	NP		001
-110A	D2549020706274		. . WASHBASIN UNIT PRE VSB A2-254-25-039 used on 001A, 001B, 001C, 001D, 001G, 001H, 001J, 001L, 001N, 001Q SEE 25-41-51-15C FOR DET	NP		001
-110B	D2549010603674		. . WASHBASIN UNIT used on 001E SEE 25-41-51-15C FOR DET	NP		001
-110C	D2549020704674		. . WASHBASIN UNIT used on 001F SEE 25-41-51-15G FOR DET	NP		001
-110D	D2549030506074		. . WASHBASIN UNIT used on 001K SEE 25-41-51-15C FOR DET	NP		001
-110E	D2549020700674		. . WASHBASIN UNIT used on 001M SEE 25-41-51-15G FOR DET	NP		001
-110F	R22540162200074		. . WASHBASIN UNIT POST VSB A2-254-25-039 used on 001P SEE 25-41-51-15C FOR DET	NP		001

- ITEM NOT ILLUSTRATED

FIG. ITEM	PART NUMBER	AIRLINE STOCK NUMBER	NOMENCLATURE 1234567	EFF CODE	UNITS PER ASSY
120A	D2549020607075		. . DOOR ASSY-WASHBASIN UNIT NP used on 001A, 001B, 001C, 001D, 001E, 001G, 001H, 001J, 001L, 001N, 001P, 001Q SEE 25-41-51-16B FOR DET		001
-120B	D2549020607675		. . DOOR ASSY-WASHBASIN UNIT NP used on 001F SEE 25-41-51-16C FOR DET		001
-120C	D2549020710075		. . DOOR ASSY-WASHBASIN UNIT NP used on 001K SEE 25-41-51-16C FOR DET		001
-120D	D2549010603675		. . DOOR ASSY-WASHBASIN UNIT NP used on 001M SEE 25-41-51-16C FOR DET		001
130A	D2549030504876		. . PANEL ASSY-WASHBASIN UNIT NP used on 001A, 001B, 001C, 001D, 001E, 001G, 001H, 001J, 001L, 001N, 001P, 001Q SEE 25-41-51-17C FOR DET		001
-130B	D2549020607676		. . PANEL ASSY-WASHBASIN UNIT NP used on 001F SEE 25-41-51-17C FOR DET		001
-130C	D2549020710076		. . PANEL ASSY-WASHBASIN UNIT NP used on 001K SEE 25-41-51-17D FOR DET		001

- ITEM NOT ILLUSTRATED

FIG. ITEM	PART NUMBER	AIRLINE STOCK NUMBER	NOMENCLATURE 1234567		EFF CODE	UNITS PER ASSY
-130D	D2549010603676		. . PANEL ASSY-WASHBASIN UNIT used on 001M SEE 25-41-51-17D FOR DET	NP		001
140A	D2549030504877		. . BIN-WASTE,CHUTE-WASTE AND EXTINGUISHER-FIRE used on 001A, 001B, 001C, 001D, 001F, 001G, 001H, 001K, 001L, 001M, 001P SEE 25-41-51-180 FOR DET	NP		001
-140B	D2549010611677		. . BIN-WASTE,CHUTE-WASTE AND EXTINGUISHER-FIRE used on 001E, 001J, 001N, 001Q SEE 25-41-51-180 FOR DET	NP		001
150A	D2549030504078		. . CABINET-SERVICE used on 001A, 001B, 001G, 001H SEE 25-41-51-19E FOR DET	NP		001
-150B	D2549030504878		. . CABINET-SERVICE PRE VSB A2-254-25-035 PRE VSB A2-254-25-039 used on 001C, 001D, 001E, 001F, 001J, 001L, 001M, 001N SEE 25-41-51-19E FOR DET	NP		001
-150C	D2549020710078		. . CABINET-SERVICE used on 001K SEE 25-41-51-19F FOR DET	NP		001
-150D	R22540163900078		. . CABINET-SERVICE POST VSB A2-254-25-035 POST VSB A2-254-25-039 used on 001P, 001Q SEE 25-41-51-19E FOR DET	NP		001

- ITEM NOT ILLUSTRATED

FIG. ITEM	PART NUMBER	AIRLINE STOCK NUMBER	NOMENCLATURE 1234567	EFF CODE	UNITS PER ASSY
160A	D2549010510679		. . TABLE-NURSING NP used on 001A, 001B, 001E, 001F, 001G, 001H, 001J, 001L, 001M, 001N, 001Q SEE 25-41-51-20A FOR DET		001
-160B	D2549010512679		. . TABLE-NURSING NP used on 001C, 001D, 001P SEE 25-41-51-20A FOR DET		001
-160C	D2549020710079		. . TABLE-NURSING NP used on 001K SEE 25-41-51-20B FOR DET		001
170A	D2549020802680		. . VENTILATION SYSTEM NP used on 001A, 001B, 001C, 001D, 001E, 001F, 001G, 001H, 001J, 001L, 001M, 001N, 001P, 001Q SEE 25-41-51-21B FOR DET		001
-170B	D2549020510680		. . VENTILATION SYSTEM NP used on 001K SEE 25-41-51-21B FOR DET		001
180A	D2549010606081		. . WATER SYSTEM-POTABLE NP PRE VSB A2-254-25-035 used on 001A, 001D, 001E, 001F, 001J, 001K, 001L, 001M, 001N, 001P SEE 25-41-51-22D FOR DET		001
-180B	D2549030608281		. . WATER SYSTEM-POTABLE NP used on 001B, 001C, 001G, 001H SEE 25-41-51-22G FOR DET		001
-180C	R22540119900081		. . WATER SYSTEM-POTABLE NP POST VSB A2-254-25-035 used on 001Q SEE 25-41-51-22D FOR DET		001

- ITEM NOT ILLUSTRATED

FIG. ITEM	PART NUMBER	AIRLINE STOCK NUMBER	NOMENCLATURE 1234567		EFF CODE	UNITS PER ASSY
190A	D2549010511082		. . WATER SYSTEM-WASTE PRE VSB A2-254-25-035 used on 001A, 001D, 001E, 001G, 001J, 001L, 001M, 001N, 001P SEE 25-41-51-23B FOR DET	NP		001
-190B	D2549020507282		. . WATER SYSTEM-WASTE used on 001B, 001C, 001H SEE 25-41-51-23B FOR DET	NP		001
-190C	D2549030504882		. . WATER SYSTEM-WASTE used on 001F, 001K SEE 25-41-51-23B FOR DET	NP		001
-190D	R22540119900082		. . WATER SYSTEM-WASTE POST VSB A2-254-25-035 used on 001Q SEE 25-41-51-23B FOR DET	NP		001
200A	D2549020513083		. . ELECTRICAL SYSTEM used on 001A, 001B, 001C, 001D, 001F, 001G, 001H, 001J, 001L, 001M, 001N, 001P, 001Q SEE 25-41-51-26M FOR DET	NP		001
-200B	D2549020514883		. . ELECTRICAL SYSTEM used on 001E SEE 25-41-51-26N FOR DET	NP		001
-200C	D2549010607283		. . ELECTRICAL SYSTEM used on 001K SEE 25-41-51-26M FOR DET	NP		001
210A	D9250000000085		. . ELECTRICAL SYSTEM-COCKPIT DOOR LOCKING used on 001A, 001B, 001C, 001D, 001E, 001F, 001G, 001H, 001J, 001K, 001L, 001M, 001N, 001P, 001Q SEE 25-41-51-310 FOR DET	NP		001

- ITEM NOT ILLUSTRATED

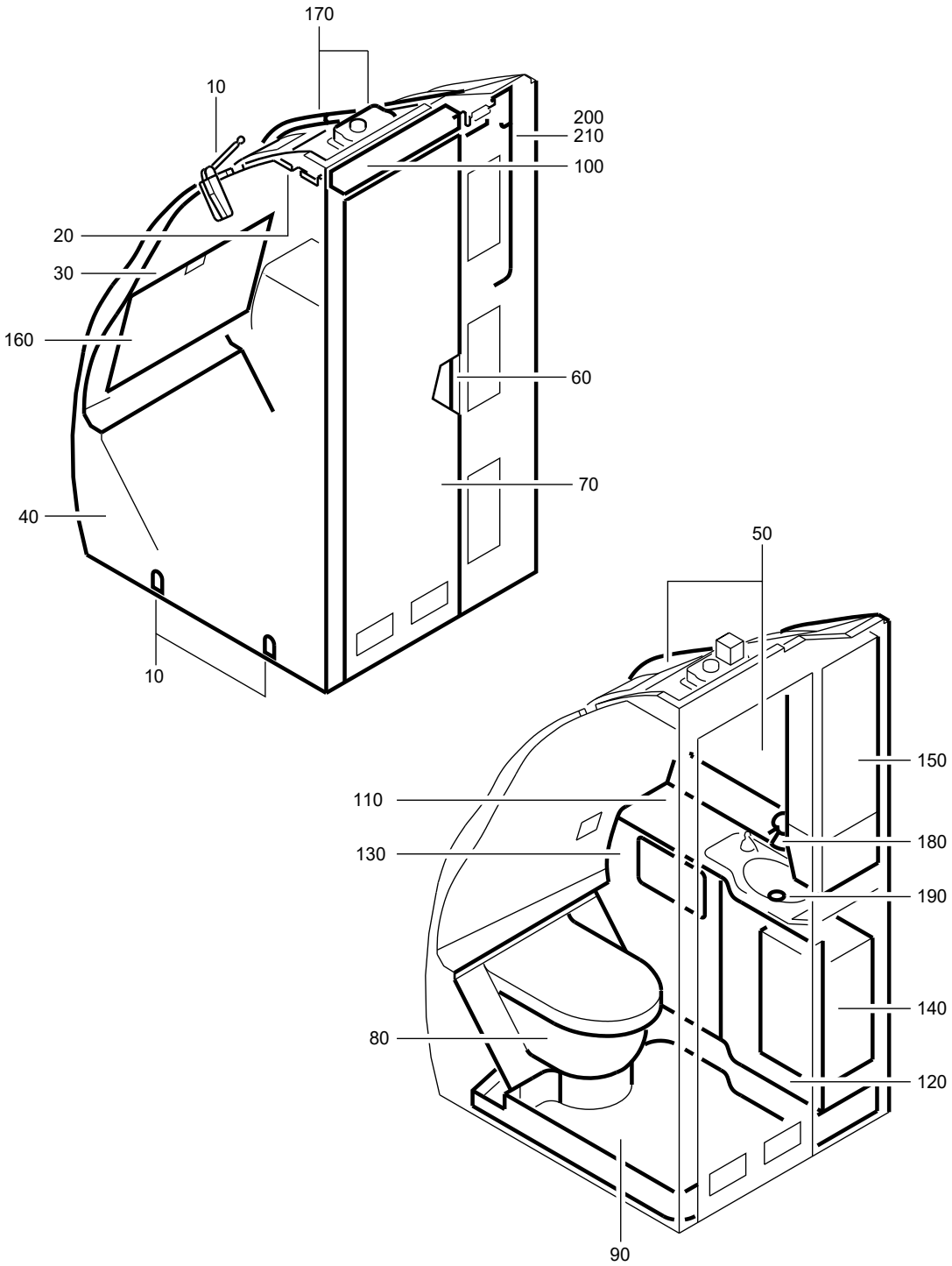

F_PL_254151_41_W_01_00

LAVATORY A ASSY
Figure 41W/EN254151SHEET41W01

FIG. ITEM	PART NUMBER	AIRLINE STOCK NUMBER	NOMENCLATURE 1234567	EFF CODE	UNITS PER ASSY
41W					
-001A	D2549030613600		. LAVATORY A ASSY SEE SIL 25-117 FOR DET		RF
-001B	D2549020809400		. LAVATORY A ASSY SEE SIL 25-117 FOR DET PRE VSB A2-254-25-054		RF
-001C	D2549010612000		. LAVATORY A ASSY SEE SIL 25-117 FOR DET		RF
-001D	D2549030403400		. LAVATORY A ASSY PRE VSB A2-254-25-046 SEE SIL 25-117 FOR DET		RF
-001E	D2549030612600		. LAVATORY A ASSY SEE SIL 25-117 FOR DET PRE VSB A2-254-25-054		RF
-001F	D2549030403000		. LAVATORY A ASSY PRE VSB A2-254-25-045 SEE SIL 25-117 FOR DET		RF
-001G	D2549030403600		. LAVATORY A ASSY SEE SIL 25-117 FOR DET		RF
-001H	D2549020808600		. LAVATORY A ASSY PRE VSB A2-254-25-098 SEE SIL 25-117 FOR DET		RF
-001J	D2549030404400		. LAVATORY A ASSY SEE SIL 25-117 FOR DET		RF
-001K	D2549020810200		. LAVATORY A ASSY PRE VSB A2-254-25-042 SEE SIL 25-117 FOR DET		RF
-001L	D2549020808400		. LAVATORY A ASSY PRE VSB A2-254-25-083 SEE SIL 25-117 FOR DET		RF

- ITEM NOT ILLUSTRATED

FIG. ITEM	PART NUMBER	AIRLINE STOCK NUMBER	NOMENCLATURE 1234567	EFF CODE	UNITS PER ASSY
-001M	D2549010611600		. LAVATORY A ASSY SEE SIL 25-117 FOR DET		RF
-001N	D2549020513200		. LAVATORY A ASSY SEE SIL 25-117 FOR DET		RF
-001P	D2549030613600		. LAVATORY A ASSY SEE SIL 25-117 FOR DET		RF
-001Q	R225401196-008		. LAVATORY A ASSY PRE VSB A2-254-25-130 POST VSB A2-254-25-042 SEE SIL 25-117 FOR DET		RF
-001R	R225401168-008		. LAVATORY A ASSY SEE SIL 25-117 FOR DET POST VSB A2-254-25-054		RF
-001S	R225401168-024		. LAVATORY A ASSY SEE SIL 25-117 FOR DET POST VSB A2-254-25-054		RF
-001T	R225401199-008		. LAVATORY A ASSY POST VSB A2-254-25-045 SEE SIL 25-117 FOR DET		RF
-001U	R225401134-030		. LAVATORY A ASSY POST VSB A2-254-25-046		RF
-001V	R225401192-002		. LAVATORY A ASSY POST VSB A2-254-25-083		RF
-001W	R225401196-044		. LAVATORY A ASSY POST VSB A2-254-25-098		RF
-001X	R225401196-054		. LAVATORY A ASSY POST VSB A2-254-25-130 SEE SIL 25-117 FOR DET		RF

- ITEM NOT ILLUSTRATED

FIG. ITEM	PART NUMBER	AIRLINE STOCK NUMBER	NOMENCLATURE 1234567		EFF CODE	UNITS PER ASSY
010A	D2549030608061		. . ATTACHMENT-LAVATORY PRE VSB A2-254-25-130 used on 001A, 001H, 001K, 001L, 001N, 001P, 001Q, 001V, 001W SEE 25-41-51-02C FOR DET	NP		001
-010B	D2549020512461		. . ATTACHMENT-LAVATORY used on 001B, 001E, 001R, 001S SEE 25-41-51-02C FOR DET	NP		001
-010C	D2549010609061		. . ATTACHMENT-LAVATORY used on 001C, 001M SEE 25-41-51-02C FOR DET	NP		001
-010D	D2549030612861		. . ATTACHMENT-LAVATORY used on 001D, 001G, 001J, 001U SEE 25-41-51-02C FOR DET	NP		001
-010E	D2549010610061		. . ATTACHMENT-LAVATORY used on 001F, 001T SEE 25-41-51-02D FOR DET	NP		001
-010F	R22540119605261		. . ATTACHMENT-LAVATORY POST VSB A2-254-25-130 used on 001X SEE 25-41-51-02C FOR DET	NP		001
020A	D2549020602663		. . PANEL-CEILING PRE VSB A2-254-25-130 used on 001A, 001F, 001H, 001K, 001L, 001N, 001P, 001Q, 001T, 001V, 001W SEE 25-41-51-040 FOR DET	NP		001
-020B	D2549030507263		. . PANEL-CEILING used on 001B, 001E, 001R, 001S SEE 25-41-51-040 FOR DET	NP		001
-020C	D2549030506063		. . PANEL-CEILING used on 001C, 001M SEE 25-41-51-040 FOR DET	NP		001

- ITEM NOT ILLUSTRATED

FIG. ITEM	PART NUMBER	AIRLINE STOCK NUMBER	NOMENCLATURE 1234567	EFF CODE	UNITS PER ASSY
-020D	D2549020602863		. . PANEL-CEILING NP used on 001D, 001G, 001J, 001U SEE 25-41-51-040 FOR DET		001
-020E	R22540119604663		. . PANEL-CEILING NP POST VSB A2-254-25-130 used on 001X SEE 25-41-51-040 FOR DET		001
030A	D2549030603264		. . WALL-REAR NP PRE VSB A2-254-25-130 used on 001A, 001F, 001H, 001K, 001L, 001N, 001P, 001Q, 001T, 001V, 001W SEE 25-41-51-05G FOR DET		001
-030B	D2549020809464		. . WALL-REAR NP used on 001B, 001E, 001R, 001S SEE 25-41-51-05G FOR DET		001
-030C	D2549010612064		. . WALL-REAR NP used on 001C, 001M SEE 25-41-51-05G FOR DET		001
-030D	D2549030403464		. . WALL-REAR NP used on 001D, 001U SEE 25-41-51-05G FOR DET		001
-030E	D2549030403664		. . WALL-REAR NP used on 001G, 001J SEE 25-41-51-05F FOR DET		001
-030F	R22540119605464		. . WALL-REAR NP POST VSB A2-254-25-130 used on 001X SEE 25-41-51-05G FOR DET		001
040A	D2549030613665		. . WALL-SIDE NP used on 001A, 001P SEE 25-41-51-06Y FOR DET		001

- ITEM NOT ILLUSTRATED

FIG. ITEM	PART NUMBER	AIRLINE STOCK NUMBER	NOMENCLATURE 1234567	EFF CODE	UNITS PER ASSY
-040B	D2549020809465		. . WALL-SIDE NP PRE VSB A2-254-25-054 used on 001B, 001E SEE 25-41-51-06Y FOR DET		001
-040C	D2549010612065		. . WALL-SIDE NP used on 001C, 001M SEE 25-41-51-06Y FOR DET		001
-040D	D2549030403465		. . WALL-SIDE NP used on 001D, 001U SEE 25-41-51-06Y FOR DET		001
-040E	D2549030403065		. . WALL-SIDE NP PRE VSB A2-254-25-045 used on 001F SEE 25-41-51-06Z FOR DET		001
-040F	D2549030403665		. . WALL-SIDE NP used on 001G, 001J SEE 25-41-51-480 FOR DET		001
-040G	D2549020808665		. . WALL-SIDE NP PRE VSB A2-254-25-042 used on 001H, 001K, 001W SEE 25-41-51-480 FOR DET		001
-040H	D2549020808465		. . WALL-SIDE NP used on 001L, 001V SEE 25-41-51-06Z FOR DET		001
-040J	D2549030406665		. . WALL-SIDE NP used on 001N SEE 25-41-51-48C FOR DET		001
-040K	R22540119600865		. . WALL-SIDE NP PRE VSB A2-254-25-130 POST VSB A2-254-25-042 used on 001Q SEE 25-41-51-480 FOR DET		001

- ITEM NOT ILLUSTRATED

FIG. ITEM	PART NUMBER	AIRLINE STOCK NUMBER	NOMENCLATURE 1234567		EFF CODE	UNITS PER ASSY
-040L	R22540116800865		. . WALL-SIDE POST VSB A2-254-25-054 used on 001R, 001S SEE 25-41-51-06Y FOR DET	NP		001
-040M	R22540119900865		. . WALL-SIDE POST VSB A2-254-25-045 used on 001T SEE 25-41-51-06Z FOR DET	NP		001
-040N	R22540119605465		. . WALL-SIDE POST VSB A2-254-25-130 used on 001X SEE 25-41-51-480 FOR DET	NP		001
050A	D2549030613666		. . HOUSING used on 001A, 001P SEE 25-41-51-07Q FOR DET	NP		001
-050B	D2549020809466		. . HOUSING used on 001B, 001E, 001R, 001S SEE 25-41-51-07R FOR DET	NP		001
-050C	D2549010612066		. . HOUSING used on 001C SEE 25-41-51-07R FOR DET	NP		001
-050D	D2549030403466		. . HOUSING used on 001D, 001U SEE 25-41-51-07Q FOR DET	NP		001
-050E	D2549030403066		. . HOUSING PRE VSB A2-254-25-130 used on 001F, 001H, 001K, 001Q, 001T, 001W SEE 25-41-51-07R FOR DET	NP		001
-050F	D2549030403666		. . HOUSING used on 001G, 001J SEE 25-41-51-07Q FOR DET	NP		001

- ITEM NOT ILLUSTRATED

FIG. ITEM	PART NUMBER	AIRLINE STOCK NUMBER	NOMENCLATURE 1234567		EFF CODE	UNITS PER ASSY
-050G	D2549020808466		. . HOUSING used on 001L, 001V SEE 25-41-51-07Q FOR DET	NP		001
-050H	D2549010611666		. . HOUSING used on 001M SEE 25-41-51-07Q FOR DET	NP		001
-050J	D2549020513266		. . HOUSING used on 001N SEE 25-41-51-49B FOR DET	NP		001
-050K	R22540119605466		. . HOUSING POST VSB A2-254-25-130 used on 001X SEE 25-41-51-07R FOR DET	NP		001
060A	D2549010500069		. . DOOR INSTL used on 001A, 001B, 001D, 001E, 001F, 001G, 001H, 001J, 001K, 001N, 001P, 001Q, 001R, 001S, 001T, 001U, 001W, 001X SEE 25-41-51-100 FOR DET	NP		001
-060B	D2549020401269		. . DOOR INSTL POST SB 25-1314 used on 001C, 001L, 001M, 001V SEE 25-41-51-10A FOR DET	NP		001
070A	A225400278-524		. . DOOR ASSY-SINGLE used on 001A, 001P SEE 25-41-51-11K FOR DET			001
-070B	A225400276-932		. . DOOR ASSY-SINGLE used on 001B, 001E, 001R, 001S SEE 25-41-51-11D FOR DET			001
-070C	A2254002768930		. . DOOR ASSY-SINGLE POST SB 25-1314 used on 001C, 001M SEE 25-41-51-11N FOR DET			001

- ITEM NOT ILLUSTRATED

FIG. ITEM	PART NUMBER	AIRLINE STOCK NUMBER	NOMENCLATURE 1234567	EFF CODE	UNITS PER ASSY
-070D	A225400276-570		. . DOOR ASSY-SINGLE used on 001D, 001U SEE 25-41-51-11E FOR DET		001
-070E	A225400276-960		. . DOOR ASSY-SINGLE used on 001F, 001T SEE 25-41-51-11J FOR DET		001
-070F	A225400276-590		. . DOOR ASSY-SINGLE used on 001G, 001J SEE 25-41-51-11E FOR DET		001
-070G	A225400276-952		. . DOOR ASSY-SINGLE PRE VSB A2-254-25-130 used on 001H, 001K, 001Q, 001W SEE 25-41-51-11G FOR DET		001
-070H	A2254002768942		. . DOOR ASSY-SINGLE used on 001L, 001V SEE 25-41-51-11N FOR DET		001
-070J	A225400276-576		. . DOOR ASSY-SINGLE used on 001N SEE 25-41-51-11E FOR DET		001
-070K	A225400263-990		. . DOOR ASSY-SINGLE POST VSB A2-254-25-130 used on 001X SEE 25-41-51-11G FOR DET		001
080A	D2549010607071		. . TOILET UNIT AND TOILET SHROUD NP PRE VSB A2-254-25-130 used on 001A, 001F, 001H, 001K, 001N, 001P, 001Q, 001T, 001W SEE 25-41-51-12D FOR DET		001

- ITEM NOT ILLUSTRATED

FIG. ITEM	PART NUMBER	AIRLINE STOCK NUMBER	NOMENCLATURE 1234567		EFF CODE	UNITS PER ASSY
-080B	D2549020512471		. . TOILET UNIT AND TOILET SHROUD used on 001B, 001E, 001R, 001S SEE 25-41-51-12E FOR DET	NP		001
-080C	D2549010607471		. . TOILET UNIT AND TOILET SHROUD used on 001C, 001M SEE 25-41-51-12E FOR DET	NP		001
-080D	D2549030611271		. . TOILET UNIT AND TOILET SHROUD used on 001D, 001G, 001J, 001U SEE 25-41-51-12E FOR DET	NP		001
-080E	D2549020514671		. . TOILET UNIT AND TOILET SHROUD used on 001L, 001V SEE 25-41-51-12E FOR DET	NP		001
-080F	R22540119605071		. . TOILET UNIT AND TOILET SHROUD POST VSB A2-254-25-130 used on 001X SEE 25-41-51-12D FOR DET	NP		001
090A	D2549030511072		. . PAN-FLOOR used on 001A, 001P SEE 25-41-51-13C FOR DET	NP		001
-090B	D2549020512472		. . PAN-FLOOR used on 001B, 001E, 001R, 001S SEE 25-41-51-13H FOR DET	NP		001
-090C	D2549030411672		. . PAN-FLOOR used on 001C, 001M SEE 25-41-51-13R FOR DET	NP		001
-090D	D2549030610672		. . PAN-FLOOR used on 001D, 001U SEE 25-41-51-13H FOR DET	NP		001

- ITEM NOT ILLUSTRATED

FIG. ITEM	PART NUMBER	AIRLINE STOCK NUMBER	NOMENCLATURE 1234567	EFF CODE	UNITS PER ASSY
-090E	D2549030606072		. . PAN-FLOOR NP used on 001F, 001T SEE 25-41-51-13E FOR DET		001
-090F	D2549030611272		. . PAN-FLOOR NP used on 001G, 001J SEE 25-41-51-13H FOR DET		001
-090G	D2549020704272		. . PAN-FLOOR NP PRE VSB A2-254-25-130 used on 001H, 001K, 001Q, 001W SEE 25-41-51-13D FOR DET		001
-090H	D2549010514272		. . PAN-FLOOR NP used on 001L, 001V SEE 25-41-51-13T FOR DET		001
-090J	D2549020702272		. . PAN-FLOOR NP used on 001N SEE 25-41-51-13D FOR DET		001
-090K	R22540119604672		. . PAN-FLOOR NP POST VSB A2-254-25-130 used on 001X SEE 25-41-51-13D FOR DET		001
100A	D2549010512673		. . LIGHT-DOOR NP PRE VSB A2-254-25-130 used on 001A, 001F, 001H, 001K, 001L, 001N, 001P, 001Q, 001T, 001V, 001W SEE 25-41-51-140 FOR DET		001
-100B	D2549030508673		. . LIGHT-DOOR NP used on 001B, 001E, 001R, 001S SEE 25-41-51-14A FOR DET		001
-100C	D2549030508473		. . LIGHT-DOOR NP used on 001C, 001M SEE 25-41-51-140 FOR DET		001

- ITEM NOT ILLUSTRATED

FIG. ITEM	PART NUMBER	AIRLINE STOCK NUMBER	NOMENCLATURE 1234567		EFF CODE	UNITS PER ASSY
-100D	D2549020613673		. . LIGHT-DOOR used on 001D, 001G, 001J, 001U SEE 25-41-51-140 FOR DET	NP		001
-100E	R22540119604673		. . LIGHT-DOOR POST VSB A2-254-25-130 used on 001X SEE 25-41-51-14C FOR DET	NP		001
110A	D2549010603274		. . WASHBASIN UNIT used on 001A, 001P SEE 25-41-51-15F FOR DET	NP		001
-110B	D2549030600874		. . WASHBASIN UNIT used on 001B, 001E, 001R, 001S SEE 25-41-51-15G FOR DET	NP		001
-110C	D2549020704674		. . WASHBASIN UNIT used on 001C, 001M SEE 25-41-51-15G FOR DET	NP		001
-110D	D2549020613674		. . WASHBASIN UNIT used on 001D, 001U SEE 25-41-51-15F FOR DET	NP		001
-110E	D2549020706274		. . WASHBASIN UNIT PRE VSB A2-254-25-130 used on 001F, 001H, 001K, 001Q, 001T, 001W SEE 25-41-51-15C FOR DET	NP		001
-110F	D2549030513874		. . WASHBASIN UNIT used on 001G, 001J SEE 25-41-51-15F FOR DET	NP		001
-110G	D2549030514674		. . WASHBASIN UNIT used on 001L, 001V SEE 25-41-51-15G FOR DET	NP		001

- ITEM NOT ILLUSTRATED

FIG. ITEM	PART NUMBER	AIRLINE STOCK NUMBER	NOMENCLATURE 1234567		EFF CODE	UNITS PER ASSY
-110H	D2549020710274		. . WASHBASIN UNIT used on 001N SEE 25-41-51-15H FOR DET	NP		001
-110J	R22540119605474		. . WASHBASIN UNIT POST VSB A2-254-25-130 used on 001X SEE 25-41-51-15C FOR DET	NP		001
120A	D2549020607075		. . DOOR ASSY-WASHBASIN UNIT PRE VSB A2-254-25-130 used on 001A, 001F, 001H, 001K, 001N, 001P, 001Q, 001T, 001W SEE 25-41-51-16B FOR DET	NP		001
-120B	D2549030507275		. . DOOR ASSY-WASHBASIN UNIT used on 001B, 001E, 001R, 001S SEE 25-41-51-16C FOR DET	NP		001
-120C	D2549030506075		. . DOOR ASSY-WASHBASIN UNIT used on 001C, 001M SEE 25-41-51-16B FOR DET	NP		001
-120D	D2549030505475		. . DOOR ASSY-WASHBASIN UNIT used on 001D, 001G, 001J, 001U SEE 25-41-51-16B FOR DET	NP		001
-120E	D2549020607675		. . DOOR ASSY-WASHBASIN UNIT used on 001L, 001V SEE 25-41-51-16C FOR DET	NP		001
-120F	R22540119605075		. . DOOR ASSY-WASHBASIN UNIT POST VSB A2-254-25-130 used on 001X SEE 25-41-51-16B FOR DET	NP		001

- ITEM NOT ILLUSTRATED

FIG. ITEM	PART NUMBER	AIRLINE STOCK NUMBER	NOMENCLATURE 1234567	EFF CODE	UNITS PER ASSY
130A	D2549030511076		. . PANEL ASSY-WASHBASIN UNIT NP used on 001A, 001P SEE 25-41-51-17D FOR DET		001
-130B	D2549030507276		. . PANEL ASSY-WASHBASIN UNIT NP used on 001B, 001E, 001R, 001S SEE 25-41-51-17D FOR DET		001
-130C	D2549030506076		. . PANEL ASSY-WASHBASIN UNIT NP used on 001C, 001M SEE 25-41-51-17C FOR DET		001
-130D	D2549020506276		. . PANEL ASSY-WASHBASIN UNIT NP used on 001D, 001G, 001J, 001U SEE 25-41-51-17C FOR DET		001
-130E	D2549030504876		. . PANEL ASSY-WASHBASIN UNIT NP PRE VSB A2-254-25-130 used on 001F, 001H, 001K, 001N, 001Q, 001T, 001W SEE 25-41-51-17C FOR DET		001
-130F	D2549020607676		. . PANEL ASSY-WASHBASIN UNIT NP used on 001L, 001V SEE 25-41-51-17C FOR DET		001
-130G	R22540119604676		. . PANEL ASSY-WASHBASIN UNIT NP POST VSB A2-254-25-130 used on 001X SEE 25-41-51-17C FOR DET		001

- ITEM NOT ILLUSTRATED

FIG. ITEM	PART NUMBER	AIRLINE STOCK NUMBER	NOMENCLATURE 1234567	EFF CODE	UNITS PER ASSY
140A	D2549030504877		. . BIN-WASTE,CHUTE-WASTE AND EXTINGUISHER-FIRE NP used on 001A, 001B, 001C, 001D, 001E, 001F, 001H, 001K, 001L, 001N, 001P, 001Q, 001R, 001S, 001T, 001U, 001V, 001W, 001X SEE 25-41-51-180 FOR DET		001
-140B	D2549020506277		. . BIN-WASTE,CHUTE-WASTE AND EXTINGUISHER-FIRE NP used on 001G, 001J SEE 25-41-51-180 FOR DET		001
-140C	D2549010611677		. . BIN-WASTE,CHUTE-WASTE AND EXTINGUISHER-FIRE NP used on 001M SEE 25-41-51-180 FOR DET		001
150A	D2549030504878		. . CABINET-SERVICE NP PRE VSB A2-254-25-042 PRE VSB A2-254-25-045 used on 001A, 001F, 001H, 001K, 001L, 001N, 001P, 001V, 001W SEE 25-41-51-19E FOR DET		001
-150B	D2549030507278		. . CABINET-SERVICE NP PRE VSB A2-254-25-054 used on 001B, 001E SEE 25-41-51-19F FOR DET		001
-150C	D2549030506078		. . CABINET-SERVICE NP used on 001C, 001M SEE 25-41-51-19E FOR DET		001
-150D	D2549020605678		. . CABINET-SERVICE NP used on 001D, 001U SEE 25-41-51-19E FOR DET		001

- ITEM NOT ILLUSTRATED

FIG. ITEM	PART NUMBER	AIRLINE STOCK NUMBER	NOMENCLATURE 1234567		EFF CODE	UNITS PER ASSY
-150E	D2549030505478		. . CABINET-SERVICE used on 001G, 001J SEE 25-41-51-19E FOR DET	NP		001
-150F	R22540114200078		. . CABINET-SERVICE PRE VSB A2-254-25-130 POST VSB A2-254-25-042 used on 001Q SEE 25-41-51-19E FOR DET	NP		001
-150G	R22540116800478		. . CABINET-SERVICE POST VSB A2-254-25-054 used on 001R, 001S SEE 25-41-51-19F FOR DET	NP		001
-150H	R22540119900278		. . CABINET-SERVICE POST VSB A2-254-25-045 used on 001T SEE 25-41-51-19E FOR DET	NP		001
-150J	R22540119604678		. . CABINET-SERVICE POST VSB A2-254-25-130 used on 001X SEE 25-41-51-19E FOR DET	NP		001
160A	D2549010510679		. . TABLE-NURSING used on 001A, 001F, 001L, 001N, 001P, 001T, 001V SEE 25-41-51-20A FOR DET	NP		001
-160B	D2549030508679		. . TABLE-NURSING used on 001B, 001E, 001R, 001S SEE 25-41-51-20A FOR DET	NP		001
-160C	D2549030508479		. . TABLE-NURSING used on 001C, 001M SEE 25-41-51-20A FOR DET	NP		001
-160D	D2549020613679		. . TABLE-NURSING used on 001D, 001G, 001J, 001U SEE 25-41-51-20A FOR DET	NP		001

- ITEM NOT ILLUSTRATED

FIG. ITEM	PART NUMBER	AIRLINE STOCK NUMBER	NOMENCLATURE 1234567	EFF CODE	UNITS PER ASSY
-160E	D2549010512679		. . TABLE-NURSING NP PRE VSB A2-254-25-130 used on 001H, 001K, 001Q, 001W SEE 25-41-51-20A FOR DET		001
-160F	R22540119604679		. . TABLE-NURSING NP POST VSB A2-254-25-130 used on 001X SEE 25-41-51-20A FOR DET		001
170A	D2549020802680		. . VENTILATION SYSTEM NP PRE VSB A2-254-25-130 used on 001A, 001F, 001H, 001K, 001L, 001P, 001Q, 001T, 001V, 001W SEE 25-41-51-21B FOR DET		001
-170B	D2549020809480		. . VENTILATION SYSTEM NP used on 001B, 001E, 001R, 001S SEE 25-41-51-21B FOR DET		001
-170C	D2549010612080		. . VENTILATION SYSTEM NP used on 001C, 001M SEE 25-41-51-21B FOR DET		001
-170D	D2549020801080		. . VENTILATION SYSTEM NP used on 001D, 001G, 001J, 001U SEE 25-41-51-21B FOR DET		001
-170E	D2549010514280		. . VENTILATION SYSTEM NP used on 001N SEE 25-41-51-21A FOR DET		001
-170F	R22540119605280		. . VENTILATION SYSTEM NP POST VSB A2-254-25-130 used on 001X SEE 25-41-51-21B FOR DET		001

- ITEM NOT ILLUSTRATED

FIG. ITEM	PART NUMBER	AIRLINE STOCK NUMBER	NOMENCLATURE 1234567	EFF CODE	UNITS PER ASSY
180A	D2549020713881		. . WATER SYSTEM-POTABLE NP used on 001A, 001P SEE 25-41-51-22H FOR DET		001
-180B	D2549010606081		. . WATER SYSTEM-POTABLE NP used on 001B, 001E, 001F, 001H, 001K, 001L, 001N, 001Q, 001R, 001S, 001T, 001V, 001W SEE 25-41-51-22D FOR DET		001
-180C	D2549030608281		. . WATER SYSTEM-POTABLE NP used on 001C, 001D, 001M, 001U SEE 25-41-51-22G FOR DET		001
-180D	D2549030607481		. . WATER SYSTEM-POTABLE NP used on 001G, 001J SEE 25-41-51-22E FOR DET		001
-180E	R22540161900081		. . WATER SYSTEM-POTABLE NP used on 001X SEE 25-41-51-22D FOR DET		001
190A	D2549020507282		. . WATER SYSTEM-WASTE NP used on 001A, 001P SEE 25-41-51-23B FOR DET		001
-190B	D2549010511082		. . WATER SYSTEM-WASTE NP used on 001B, 001E, 001F, 001G, 001H, 001K, 001L, 001N, 001Q, 001R, 001S, 001T, 001V, 001W, 001X SEE 25-41-51-23B FOR DET		001
-190C	D2549020605682		. . WATER SYSTEM-WASTE NP used on 001C, 001D, 001M, 001U SEE 25-41-51-23B FOR DET		001
-190D	D2549020506282		. . WATER SYSTEM-WASTE NP used on 001J SEE 25-41-51-23B FOR DET		001

- ITEM NOT ILLUSTRATED

FIG. ITEM	PART NUMBER	AIRLINE STOCK NUMBER	NOMENCLATURE 1234567		EFF CODE	UNITS PER ASSY
200A	D2549020510483		. . ELECTRICAL SYSTEM used on 001A SEE 25-41-51-26N FOR DET	NP		001
-200B	D2549020513083		. . ELECTRICAL SYSTEM used on 001B, 001C, 001E, 001F, 001H, 001L, 001M, 001N, 001R, 001S, 001T, 001V, 001W SEE 25-41-51-26M FOR DET	NP		001
-200C	D2549030402083		. . ELECTRICAL SYSTEM used on 001D, 001U SEE 25-41-51-26K FOR DET	NP		001
-200D	D2549030611483		. . ELECTRICAL SYSTEM used on 001G SEE 25-41-51-26M FOR DET	NP		001
-200E	D2549020810283		. . ELECTRICAL SYSTEM PRE VSB A2-254-25-130 used on 001K, 001Q SEE 25-41-51-26P FOR DET	NP		001
-200F	D2549030404483		. . ELECTRICAL SYSTEM used on 001J SEE 25-41-51-26P FOR DET	NP		001
-200G	D2549030613783		. . ELECTRICAL SYSTEM used on 001P SEE 25-41-51-26N FOR DET	NP		001
-200H	R22540119605483		. . ELECTRICAL SYSTEM POST VSB A2-254-25-130 used on 001X SEE 25-41-51-26P FOR DET	NP		001

- ITEM NOT ILLUSTRATED

FIG. ITEM	PART NUMBER	AIRLINE STOCK NUMBER	NOMENCLATURE 1234567		EFF CODE	UNITS PER ASSY
210A	D9250000000085		. . ELECTRICAL SYSTEM-COCKPIT DOOR LOCKING used on 001A, 001B, 001C, 001D, 001E, 001F, 001G, 001H, 001J, 001K, 001L, 001M, 001N, 001P, 001Q, 001R, 001S, 001T, 001U, 001V, 001W, 001X SEE 25-41-51-310 FOR DET	NP		001

- ITEM NOT ILLUSTRATED

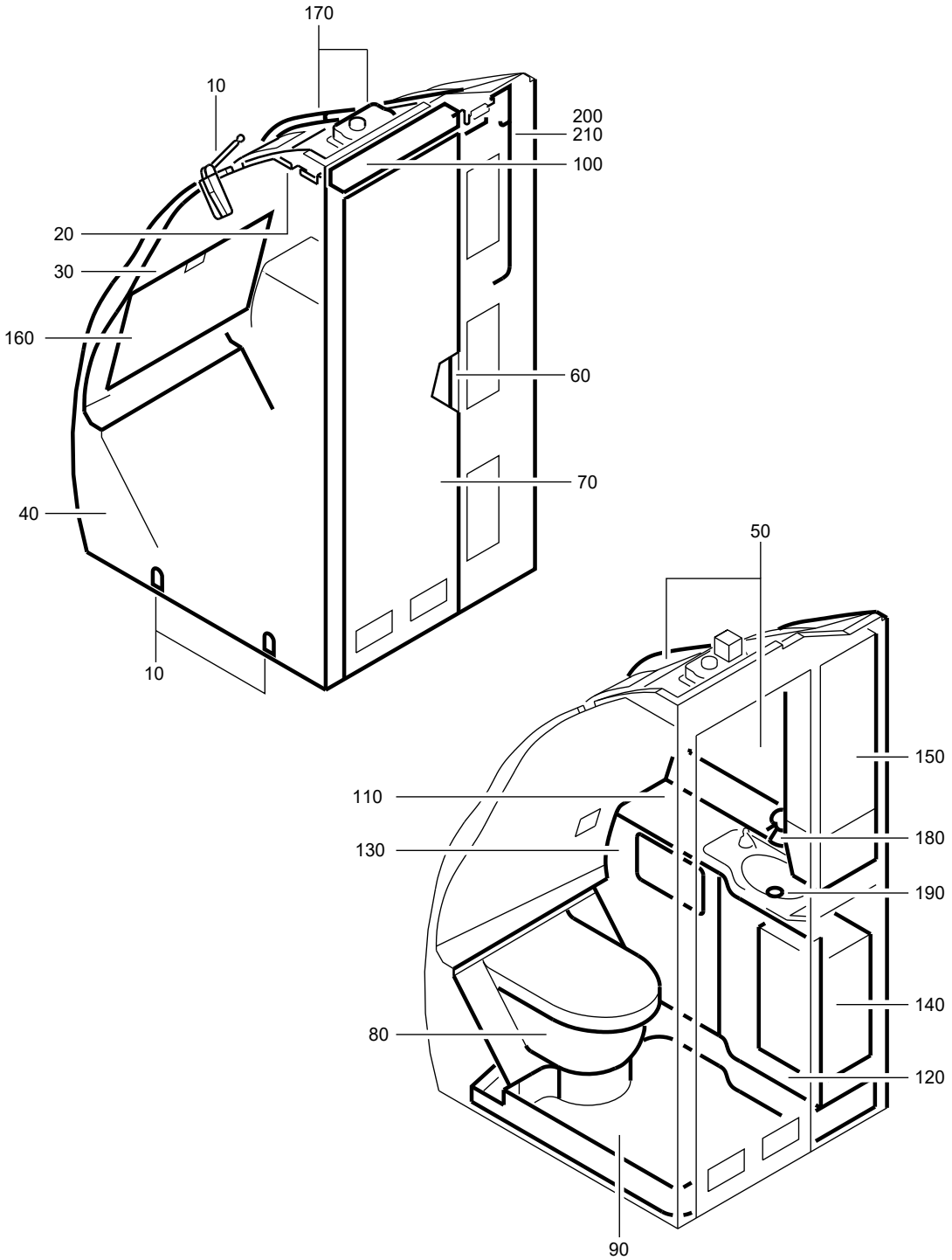

F_PL_254151_41_X_01_00

LAVATORY A ASSY
Figure 41X/EN254151SHEET41X01

FIG. ITEM	PART NUMBER	AIRLINE STOCK NUMBER	NOMENCLATURE 1234567	EFF CODE	UNITS PER ASSY
41X					
-001A	D2549010611200		. LAVATORY A ASSY SEE SIL 25-117 FOR DET		RF
-001B	D2549030401600		. LAVATORY A ASSY PRE VSB A2-254-25-015 SEE SIL 25-117 FOR DET		RF
-001C	D2549030402200		. LAVATORY A ASSY SEE SIL 25-117 FOR DET PRE VSB A2-254-25-054		RF
-001D	D2549010611000		. LAVATORY A ASSY SEE SIL 25-117 FOR DET		RF
-001E	D2549030405400		. LAVATORY A ASSY SEE SIL 25-117 FOR DET PRE VSB A2-254-25-054		RF
-001F	D2549030405200		. LAVATORY A ASSY PRE VSB A2-254-25-046 SEE SIL 25-117 FOR DET		RF
-001G	D2549030402400		. LAVATORY A ASSY SEE SIL 25-117 FOR DET		RF
-001H	D2549020806000		. LAVATORY A ASSY PRE VSB A2-254-25-042 SEE SIL 25-117 FOR DET PRE VSB A2-254-25-054		RF
-001J	D2549020805600		. LAVATORY A ASSY SEE SIL 25-117 FOR DET		RF
-001K	D2549030402000		. LAVATORY A ASSY PRE VSB A2-254-25-046 SEE SIL 25-117 FOR DET		RF
-001L	D2549030401000		. LAVATORY A ASSY SEE SIL 25-117 FOR DET		RF

- ITEM NOT ILLUSTRATED

FIG. ITEM	PART NUMBER	AIRLINE STOCK NUMBER	NOMENCLATURE 1234567	EFF CODE	UNITS PER ASSY
-001M	D2549010610800		. LAVATORY A ASSY PRE VSB A2-254-25-080 SEE SIL 25-117 FOR DET		RF
-001N	D2549020806000		. LAVATORY A ASSY PRE VSB A2-254-25-042 SEE SILSIL 25-117 FOR DET PRE VSB A2-254-25-054		RF
-001P	R225401199-000		. LAVATORY A ASSY POST VSB A2-254-25-015 SEE SIL 25-117 FOR DET		RF
-001Q	R225401196-010		. LAVATORY A ASSY PRE VSB A2-254-25-130 POST VSB A2-254-25-042 SEE SIL 25-117 FOR DET		RF
-001R	R225401196-040		. LAVATORY A ASSY POST VSB A2-254-25-054 SEE SIL 25-117 FOR DET		RF
-001S	R225401196-040		. LAVATORY A ASSY POST VSB A2-254-25-054 SEE SIL 25-117 FOR DET		RF
-001T	R225401168-010		. LAVATORY A ASSY POST VSB A2-254-25-054 SEE SIL 25-117 FOR DET		RF
-001U	R225401168-012		. LAVATORY A ASSY POST VSB A2-254-25-054 SEE SIL 25-117 FOR DET		RF
-001V	R225401145-010		. LAVATORY A ASSY POST VSB A2-254-25-080 SEE SIL 25-117 FOR DET		RF
-001W	R225401134-032		. LAVATORY A ASSY POST VSB A2-254-25-046		RF

- ITEM NOT ILLUSTRATED

FIG. ITEM	PART NUMBER	AIRLINE STOCK NUMBER	NOMENCLATURE 1234567		EFF CODE	UNITS PER ASSY
-001X	R225401134-034		. LAVATORY A ASSY POST VSB A2-254-25-046			RF
-001Y	R225401196-056		. LAVATORY A ASSY POST VSB A2-254-25-130 SEE SIL 25-117 FOR DET			RF
010A	D2549030608061		. . ATTACHMENT-LAVATORY PRE VSB A2-254-25-130 used on 001A, 001D, 001H, 001J, 001M, 001N, 001Q, 001R, 001S, 001V SEE 25-41-51-02C FOR DET	NP		001
-010B	D2549020512461		. . ATTACHMENT-LAVATORY used on 001C, 001E, 001T, 001U SEE 25-41-51-02C FOR DET	NP		001
-010C	D2549030612861		. . ATTACHMENT-LAVATORY used on 001F, 001G, 001K, 001W, 001X SEE 25-41-51-02C FOR DET	NP		001
-010D	D2549020705861		. . ATTACHMENT-LAVATORY used on 001L SEE 25-41-51-02D FOR DET	NP		001
-010E	D2549010610061		. . ATTACHMENT-LAVATORY used on 001B, 001P SEE 25-41-51-02D FOR DET	NP		001
-010F	R22540119605261\		. . ATTACHMENT-LAVATORY POST VSB A2-254-25-130 used on 001Y SEE 25-41-51-02C FOR DET	NP		001
020A	D2549020602663		. . PANEL-CEILING used on 001A, 001D, 001J SEE 25-41-51-040 FOR DET	NP		001

- ITEM NOT ILLUSTRATED

FIG. ITEM	PART NUMBER	AIRLINE STOCK NUMBER	NOMENCLATURE 1234567	EFF CODE	UNITS PER ASSY
-020B	D2549030402263		. . PANEL-CEILING NP used on 001C, 001E, 001T, 001U SEE 25-41-51-04A FOR DET		001
-020C	D2549030405263		. . PANEL-CEILING NP used on 001F, 001G, 001K, 001W, 001X SEE 25-41-51-04A FOR DET		001
-020D	D2549030401463		. . PANEL-CEILING NP PRE VSB A2-254-25-130 used on 001B, 001H, 001L, 001M, 001N, 001P, 001Q, 001R, 001S, 001V SEE 25-41-51-040 FOR DET		001
-020E	R22540119604663		. . PANEL-CEILING NP POST VSB A2-254-25-130 used on 001Y SEE 25-41-51-040 FOR DET		001
030A	D2549030603264		. . WALL-REAR NP PRE VSB A2-254-25-130 used on 001A, 001B, 001D, 001H, 001J, 001L, 001M, 001N, 001P, 001Q, 001R, 001S, 001V SEE 25-41-51-05G FOR DET		001
-030B	D2549020809464		. . WALL-REAR NP used on 001C, 001E, 001T, 001U SEE 25-41-51-05G FOR DET		001
-030C	D2549030403464		. . WALL-REAR NP used on 001F, 001K, 001W, 001X SEE 25-41-51-05G FOR DET		001
-030D	D2549030403664		. . WALL-REAR NP used on 001G SEE 25-41-51-05F FOR DET		001

- ITEM NOT ILLUSTRATED

FIG. ITEM	PART NUMBER	AIRLINE STOCK NUMBER	NOMENCLATURE 1234567	EFF CODE	UNITS PER ASSY
-030E	R22540119605464		. . WALL-REAR NP POST VSB A2-254-25-130 used on 001Y SEE 25-41-51-05G FOR DET		001
040A	D2549010611265		. . WALL-SIDE NP used on 001A SEE 25-41-51-480 FOR DET		001
-040B	D2549030403065		. . WALL-SIDE NP used on 001B, 001P SEE 25-41-51-06Z FOR DET		001
-040C	D2549020809465		. . WALL-SIDE NP PRE VSB A2-254-25-054 used on 001C, 001E SEE 25-41-51-06Y FOR DET		001
-040D	D2549010611065		. . WALL-SIDE NP used on 001D SEE 25-41-51-06Z FOR DET		001
-040E	D2549030403465		. . WALL-SIDE NP used on 001F, 001K, 001W, 001X SEE 25-41-51-06Y FOR DET		001
-040F	D2549030403665		. . WALL-SIDE NP used on 001G SEE 25-41-51-480 FOR DET		001
-040G	D2549020808665		. . WALL-SIDE NP PRE VSB A2-254-25-042 PRE VSB A2-254-25-054 used on 001H, 001N SEE 25-41-51-480 FOR DET		001
-040H	D2549020808465		. . WALL-SIDE NP used on 001J SEE 25-41-51-06Z FOR DET		001

- ITEM NOT ILLUSTRATED

FIG. ITEM	PART NUMBER	AIRLINE STOCK NUMBER	NOMENCLATURE 1234567	EFF CODE	UNITS PER ASSY
-040J	D2549030401065		. . WALL-SIDE NP used on 001L SEE 25-41-51-480 FOR DET		001
-040K	D2549010610865		. . WALL-SIDE NP PRE VSB A2-254-25-080 used on 001M SEE 25-41-51-480 FOR DET		001
-040L	R22540119600865		. . WALL-SIDE NP PRE VSB A2-254-25-130 POST VSB A2-254-25-042 used on 001Q SEE 25-41-51-480 FOR DET		001
-040M	R22540119604065		. . WALL-SIDE NP POST VSB A2-254-25-054 used on 001R, 001S SEE 25-41-51-480 FOR DET		001
-040N	R22540116800865		. . WALL-SIDE NP POST VSB A2-254-25-054 used on 001T, 001U SEE 25-41-51-06Y FOR DET		001
-040P	R22540114501065		. . WALL-SIDE NP POST VSB A2-254-25-080 used on 001V SEE 25-41-51-480 FOR DET		001
-040Q	R22540119605465		. . WALL-SIDE NP POST VSB A2-254-25-130 used on 001Y SEE 25-41-51-480 FOR DET		001
050A	D2549020806066		. . HOUSING NP PRE VSB A2-254-25-130 used on 001B, 001H, 001L, 001N, 001P, 001Q, 001R, 001S SEE 25-41-51-07S FOR DET		001

- ITEM NOT ILLUSTRATED

FIG. ITEM	PART NUMBER	AIRLINE STOCK NUMBER	NOMENCLATURE 1234567		EFF CODE	UNITS PER ASSY
-050B	D2549030402266		. . HOUSING used on 001C, 001E, 001T, 001U SEE 25-41-51-07R FOR DET	NP		001
-050C	D2549020808866		. . HOUSING used on 001D SEE 25-41-51-07R FOR DET	NP		001
-050D	D2549030405266		. . HOUSING used on 001F, 001K, 001W, 001X SEE 25-41-51-07R FOR DET	NP		001
-050E	D2549030402466		. . HOUSING used on 001G SEE 25-41-51-07R FOR DET	NP		001
-050F	D2549010611266		. . HOUSING used on 001A SEE 25-41-51-07Q FOR DET	NP		001
-050G	D2549020808466		. . HOUSING used on 001J SEE 25-41-51-07Q FOR DET	NP		001
-050H	D2549020811466		. . HOUSING used on 001M, 001V SEE 25-41-51-07S FOR DET	NP		001
-050J	R22540119605666		. . HOUSING POST VSB A2-254-25-130 used on 001Y SEE 25-41-51-07S FOR DET	NP		001
060A	D2549010500069		. . DOOR INSTL used on 001A, 001B, 001C, 001D, 001E, 001F, 001G, 001H, 001K, 001L, 001M, 001N, 001P, 001Q, 001R, 001S, 001T, 001U, 001V, 001W, 001X, 001Y SEE 25-41-51-100 FOR DET	NP		001

- ITEM NOT ILLUSTRATED

FIG. ITEM	PART NUMBER	AIRLINE STOCK NUMBER	NOMENCLATURE 1234567	EFF CODE	UNITS PER ASSY
-060B	D2549020401269		. . DOOR INSTL NP used on 001J SEE 25-41-51-10A FOR DET		001
070A	A225400276-562		. . DOOR ASSY-SINGLE used on 001A SEE 25-41-51-11D FOR DET		001
-070B	A225400276-960		. . DOOR ASSY-SINGLE used on 001B, 001P SEE 25-41-51-11J FOR DET		001
-070C	A225400276-932		. . DOOR ASSY-SINGLE used on 001C, 001E, 001T, 001U SEE 25-41-51-11D FOR DET		001
-070D	A225400276-596		. . DOOR ASSY-SINGLE used on 001D SEE 25-41-51-11G FOR DET		001
-070E	A225400276-570		. . DOOR ASSY-SINGLE used on 001F, 001K, 001W, 001X SEE 25-41-51-11E FOR DET		001
-070F	A225400276-590		. . DOOR ASSY-SINGLE used on 001G SEE 25-41-51-11E FOR DET		001
-070G	A225400276-952		. . DOOR ASSY-SINGLE PRE VSB A2-254-25-130 used on 001H, 001N, 001Q, 001R, 001S SEE 25-41-51-11G FOR DET		001
-070H	A2254002768942		. . DOOR ASSY-SINGLE used on 001J SEE 25-41-51-11N FOR DET		001
-070J	A225400276-588		. . DOOR ASSY-SINGLE used on 001L SEE 25-41-51-11F FOR DET		001

- ITEM NOT ILLUSTRATED

FIG. ITEM	PART NUMBER	AIRLINE STOCK NUMBER	NOMENCLATURE 1234567		EFF CODE	UNITS PER ASSY
-070K	A225400276-592		. . DOOR ASSY-SINGLE used on 001M, 001V SEE 25-41-51-11E FOR DET			001
-070L	A225400263-990		. . DOOR ASSY-SINGLE POST VSB A2-254-25-130 used on 001Y SEE 25-41-51-11G FOR DET			001
080A	D2549010607671		. . TOILET UNIT AND TOILET SHROUD used on 001A SEE 25-41-51-12E FOR DET	NP		001
-080B	D2549010607071		. . TOILET UNIT AND TOILET SHROUD PRE VSB A2-254-25-130 used on 001B, 001H, 001L, 001M, 001N, 001P, 001Q, 001R, 001S, 001V SEE 25-41-51-12D FOR DET	NP		001
-080C	D2549020512471		. . TOILET UNIT AND TOILET SHROUD used on 001C, 001E, 001T, 001U SEE 25-41-51-12E FOR DET	NP		001
-080D	D2549020512271		. . TOILET UNIT AND TOILET SHROUD used on 001D SEE 25-41-51-12D FOR DET	NP		001
-080E	D2549030611271		. . TOILET UNIT AND TOILET SHROUD used on 001F, 001G, 001K, 001W, 001X SEE 25-41-51-12E FOR DET	NP		001

- ITEM NOT ILLUSTRATED

FIG. ITEM	PART NUMBER	AIRLINE STOCK NUMBER	NOMENCLATURE 1234567		EFF CODE	UNITS PER ASSY
-080F	D2549020514671		. . TOILET UNIT AND TOILET SHROUD used on 001J SEE 25-41-51-12E FOR DET	NP		001
-080G	R22540119605071		. . TOILET UNIT AND TOILET SHROUD POST VSB A2-254-25-130 used on 001Y SEE 25-41-51-12D FOR DET	NP		001
090A	D2549010611272		. . PAN-FLOOR used on 001A SEE 25-41-51-13K FOR DET	NP		001
-090B	D2549030401672		. . PAN-FLOOR used on 001B, 001P SEE 25-41-51-13L FOR DET	NP		001
-090C	D2549030402272		. . PAN-FLOOR used on 001C, 001E, 001T, 001U SEE 25-41-51-13J FOR DET	NP		001
-090D	D2549020512272		. . PAN-FLOOR used on 001D SEE 25-41-51-13H FOR DET	NP		001
-090E	D2549030405272		. . PAN-FLOOR used on 001F, 001K, 001W, 001X SEE 25-41-51-13J FOR DET	NP		001
-090F	D2549030402472		. . PAN-FLOOR used on 001G SEE 25-41-51-13J FOR DET	NP		001
-090G	D2549020806072		. . PAN-FLOOR PRE VSB A2-254-25-130 used on 001H, 001N, 001Q, 001R, 001S SEE 25-41-51-13J FOR DET	NP		001

- ITEM NOT ILLUSTRATED

FIG. ITEM	PART NUMBER	AIRLINE STOCK NUMBER	NOMENCLATURE 1234567		EFF CODE	UNITS PER ASSY
-090H	D2549010514272		. . PAN-FLOOR used on 001J SEE 25-41-51-13T FOR DET	NP		001
-090J	D2549030401072		. . PAN-FLOOR used on 001L SEE 25-41-51-13J FOR DET	NP		001
-090K	D2549010610872		. . PAN-FLOOR used on 001M, 001V SEE 25-41-51-13K FOR DET	NP		001
-090L	R22540119605672		. . PAN-FLOOR POST VSB A2-254-25-130 used on 001Y SEE 25-41-51-13J FOR DET	NP		001
100A	D2549010512673		. . LIGHT-DOOR PRE VSB A2-254-25-130 used on 001A, 001B, 001D, 001H, 001J, 001L, 001M, 001N, 001P, 001Q, 001R, 001S, 001V SEE 25-41-51-140 FOR DET	NP		001
-100B	D2549030508673		. . LIGHT-DOOR used on 001C, 001E, 001T, 001U SEE 25-41-51-14A FOR DET	NP		001
-100C	D2549020613673		. . LIGHT-DOOR used on 001F, 001G, 001K, 001W, 001X SEE 25-41-51-140 FOR DET	NP		001
-100D	R22540119604673		. . LIGHT-DOOR POST VSB A2-254-25-130 used on 001Y SEE 25-41-51-14C FOR DET	NP		001
110A	D2549030605874		. . WASHBASIN UNIT used on 001A SEE 25-41-51-15J FOR DET	NP		001

- ITEM NOT ILLUSTRATED

FIG. ITEM	PART NUMBER	AIRLINE STOCK NUMBER	NOMENCLATURE 1234567	EFF CODE	UNITS PER ASSY
-110B	D2549020706274		. . WASHBASIN UNIT NP used on 001B, 001P SEE 25-41-51-15C FOR DET		001
-110C	D2549030600874		. . WASHBASIN UNIT NP used on 001C, 001E, 001T, 001U SEE 25-41-51-15G FOR DET		001
-110D	D2549020700674		. . WASHBASIN UNIT NP used on 001D SEE 25-41-51-15G FOR DET		001
-110E	D2549020613674		. . WASHBASIN UNIT NP used on 001F, 001K, 001W, 001X SEE 25-41-51-15F FOR DET		001
-110F	D2549030513874		. . WASHBASIN UNIT NP used on 001G SEE 25-41-51-15F FOR DET		001
-110G	D2549030514674		. . WASHBASIN UNIT NP PRE VSB A2-254-25-130 used on 001H, 001J, 001N, 001Q, 001R, 001S SEE 25-41-51-15G FOR DET		001
-110H	D2549020614474		. . WASHBASIN UNIT NP used on 001L SEE 25-41-51-15F FOR DET		001
-110J	D2549030509874		. . WASHBASIN UNIT NP used on 001M, 001V SEE 25-41-51-15G FOR DET		001
-110K	R22540119604674		. . WASHBASIN UNIT NP POST VSB A2-254-25-130 used on 001Y SEE 25-41-51-15G FOR DET		001

- ITEM NOT ILLUSTRATED

FIG. ITEM	PART NUMBER	AIRLINE STOCK NUMBER	NOMENCLATURE 1234567	EFF CODE	UNITS PER ASSY
120A	D2549030506275		. . DOOR ASSY-WASHBASIN UNIT NP used on 001A SEE 25-41-51-16C FOR DET		001
-120B	D2549020607075		. . DOOR ASSY-WASHBASIN UNIT NP PRE VSB A2-254-25-130 used on 001B, 001H, 001N, 001P, 001Q, 001R, 001S SEE 25-41-51-16B FOR DET		001
-120C	D2549030507275		. . DOOR ASSY-WASHBASIN UNIT NP used on 001C, 001E, 001T, 001U SEE 25-41-51-16C FOR DET		001
-120D	D2549010603675		. . DOOR ASSY-WASHBASIN UNIT NP used on 001D SEE 25-41-51-16C FOR DET		001
-120E	D2549030505475		. . DOOR ASSY-WASHBASIN UNIT NP used on 001F, 001G, 001K, 001W, 001X SEE 25-41-51-16B FOR DET		001
-120F	D2549020607675		. . DOOR ASSY-WASHBASIN UNIT NP used on 001J SEE 25-41-51-16C FOR DET		001
-120G	D2549030606075		. . DOOR ASSY-WASHBASIN UNIT NP used on 001L, 001M, 001V SEE 25-41-51-16E FOR DET		001

- ITEM NOT ILLUSTRATED

FIG. ITEM	PART NUMBER	AIRLINE STOCK NUMBER	NOMENCLATURE 1234567	EFF CODE	UNITS PER ASSY
-120H	R22540119605075		. . DOOR ASSY-WASHBASIN UNIT NP POST VSB A2-254-25-130 used on 001Y SEE 25-41-51-16B FOR DET		001
130A	D2549030506276		. . PANEL ASSY-WASHBASIN UNIT NP used on 001A SEE 25-41-51-17C FOR DET		001
-130B	D2549030504876		. . PANEL ASSY-WASHBASIN UNIT NP PRE VSB A2-254-25-130 used on 001B, 001H, 001L, 001M, 001N, 001P, 001Q, 001R, 001S, 001V SEE 25-41-51-17C FOR DET		001
-130C	D2549030507276		. . PANEL ASSY-WASHBASIN UNIT NP used on 001C, 001E, 001T, 001U SEE 25-41-51-17D FOR DET		001
-130D	D2549010603676		. . PANEL ASSY-WASHBASIN UNIT NP used on 001D SEE 25-41-51-17D FOR DET		001
-130E	D2549020506276		. . PANEL ASSY-WASHBASIN UNIT NP used on 001F, 001G, 001K, 001W, 001X SEE 25-41-51-17C FOR DET		001
-130F	D2549020607676		. . PANEL ASSY-WASHBASIN UNIT NP used on 001J SEE 25-41-51-17C FOR DET		001

- ITEM NOT ILLUSTRATED

FIG. ITEM	PART NUMBER	AIRLINE STOCK NUMBER	NOMENCLATURE 1234567		EFF CODE	UNITS PER ASSY
-130G	R22540119604676		. . PANEL ASSY-WASHBASIN UNIT POST VSB A2-254-25-130 used on 001Y SEE 25-41-51-17C FOR DET	NP		001
140A	D2549010611677		. . BIN-WASTE,CHUTE-WASTE AND EXTINGUISHER-FIRE used on 001A, 001B, 001C, 001D, 001H, 001J, 001K, 001L, 001M, 001N, 001P, 001Q, 001R, 001S, 001U, 001V, 001W, 001X, 001Y SEE 25-41-51-180 FOR DET	NP		001
-140B	D2549030504877		. . BIN-WASTE,CHUTE-WASTE AND EXTINGUISHER-FIRE used on 001C, 001E, 001T, 001U SEE 25-41-51-180 FOR DET	NP		001
-140C	D2549030402477		. . BIN-WASTE,CHUTE-WASTE AND EXTINGUISHER-FIRE used on 001G SEE 25-41-51-180 FOR DET	NP		001
150A	D2549030504878		. . CABINET-SERVICE PRE VSB A2-254-25-015 PRE VSB A2-254-25-042 PRE VSB A2-254-25-054 PRE VSB A2-254-25-080 used on 001A, 001B, 001D, 001H, 001J, 001M, 001N SEE 25-41-51-19E FOR DET	NP		001
-150B	D2549030507278		. . CABINET-SERVICE PRE VSB A2-254-25-054 used on 001C, 001E SEE 25-41-51-19F FOR DET	NP		001

- ITEM NOT ILLUSTRATED

FIG. ITEM	PART NUMBER	AIRLINE STOCK NUMBER	NOMENCLATURE 1234567		EFF CODE	UNITS PER ASSY
-150C	D2549020605678		. . CABINET-SERVICE used on 001F, 001K, 001W, 001X SEE 25-41-51-19E FOR DET	NP		001
-150D	D2549030505478		. . CABINET-SERVICE used on 001G SEE 25-41-51-19E FOR DET	NP		001
-150E	D2549030505878		. . CABINET-SERVICE used on 001L SEE 25-41-51-19E FOR DET	NP		001
-150F	R22540114200078		. . CABINET-SERVICE PRE VSB A2-254-25-130 POST VSB A2-254-25-042 used on 001Q SEE 25-41-51-19E FOR DET	NP		001
-150G	R22540163900078		. . CABINET-SERVICE POST VSB A2-254-25-015 used on 001P SEE 25-41-51-19E FOR DET	NP		001
-150H	R22540119500078		. . CABINET-SERVICE POST VSB A2-254-25-054 used on 001R, 001S SEE 25-41-51-19E FOR DET	NP		001
-150J	R22540116800478		. . CABINET-SERVICE POST VSB A2-254-25-054 used on 001T, 001U SEE 25-41-51-19F FOR DET	NP		001
-150K	R22540114500278		. . CABINET-SERVICE POST VSB A2-254-25-080 used on 001V SEE 25-41-51-19E FOR DET	NP		001

- ITEM NOT ILLUSTRATED

FIG. ITEM	PART NUMBER	AIRLINE STOCK NUMBER	NOMENCLATURE 1234567		EFF CODE	UNITS PER ASSY
-150L	R22540119604678		. . CABINET-SERVICE POST VSB A2-254-25-130 used on 001Y SEE 25-41-51-19E FOR DET	NP		001
160A	D2549010512679		. . TABLE-NURSING PRE VSB A2-254-25-130 used on 001A, 001H, 001L, 001M, 001N, 001Q, 001R, 001S, 001V SEE 25-41-51-20A FOR DET	NP		001
-160B	D2549030508679		. . TABLE-NURSING used on 001C, 001E, 001T, 001U SEE 25-41-51-20A FOR DET	NP		001
-160C	D2549010510679		. . TABLE-NURSING used on 001B, 001D, 001J, 001P SEE 25-41-51-20A FOR DET	NP		001
-160D	D2549020613679		. . TABLE-NURSING used on 001F, 001G, 001K, 001W, 001X SEE 25-41-51-20A FOR DET	NP		001
-160E	R22540119604679		. . TABLE-NURSING POST VSB A2-254-25-130 used on 001Y SEE 25-41-51-20A FOR DET	NP		001
170A	D2549020802680		. . VENTILATION SYSTEM PRE VSB A2-254-25-130 used on 001A, 001B, 001D, 001H, 001J, 001L, 001M, 001N, 001P, 001Q, 001R, 001S, 001V SEE 25-41-51-21B FOR DET	NP		001
-170B	D2549020809480		. . VENTILATION SYSTEM used on 001C, 001E, 001T, 001U SEE 25-41-51-21B FOR DET	NP		001

- ITEM NOT ILLUSTRATED

FIG. ITEM	PART NUMBER	AIRLINE STOCK NUMBER	NOMENCLATURE 1234567		EFF CODE	UNITS PER ASSY
-170C	D2549020801080		. . VENTILATION SYSTEM used on 001F, 001G, 001K, 001W, 001X SEE 25-41-51-21B FOR DET	NP		001
-170D	R22540119605280		. . VENTILATION SYSTEM POST VSB A2-254-25-130 used on 001Y SEE 25-41-51-21B FOR DET	NP		001
180A	D2549010606081		. . WATER SYSTEM-POTABLE PRE VSB A2-254-25-015 used on 001A, 001B, 001C, 001D, 001E, 001H, 001J, 001L, 001M, 001R, 001T, 001U, 001V SEE 25-41-51-22D FOR DET	NP		001
-180B	D2549030608281		. . WATER SYSTEM-POTABLE used on 001F, 001W SEE 25-41-51-22G FOR DET	NP		001
-180C	D2549030607481		. . WATER SYSTEM-POTABLE used on 001G SEE 25-41-51-22E FOR DET	NP		001
-180D	D2549030402081		. . WATER SYSTEM-POTABLE used on 001K, 001X SEE 25-41-51-22G FOR DET	NP		001
-180E	D2547161202281		. . WATER SYSTEM-POTABLE used on 001N, 001S SEE 25-41-51-22D FOR DET	NP		001
-180F	R22540119900081		. . WATER SYSTEM-POTABLE POST VSB A2-254-25-015 used on 001P, 001Q SEE 25-41-51-22D FOR DET	NP		001
-180G	R22540119605681		. . WATER SYSTEM-POTABLE used on 001Y SEE 25-41-51-22D FOR DET	NP		001

- ITEM NOT ILLUSTRATED

FIG. ITEM	PART NUMBER	AIRLINE STOCK NUMBER	NOMENCLATURE 1234567		EFF CODE	UNITS PER ASSY
190A	D2549030504882		. . WATER SYSTEM-WASTE used on 001A SEE 25-41-51-23B FOR DET	NP		001
-190B	D2549010511082		. . WATER SYSTEM-WASTE PRE VSB A2-254-25-015 used on 001B, 001C, 001D, 001E, 001H, 001J, 001M, 001R, 001T, 001U, 001V SEE 25-41-51-23B FOR DET	NP		001
-190C	D2549020605682		. . WATER SYSTEM-WASTE used on 001F, 001W SEE 25-41-51-23B FOR DET	NP		001
190D	D2549020506282		. . WATER SYSTEM-WASTE used on 001G SEE 25-41-51-23B FOR DET	NP		001
-190E	D2549030402082		. . WATER SYSTEM-WASTE used on 001K, 001X SEE 25-41-51-23B FOR DET	NP		001
-190F	D2549030614682		. . WATER SYSTEM-WASTE used on 001L SEE 25-41-51-23D FOR DET	NP		001
-190G	D2547161202282		. . WATER SYSTEM-WASTE used on 001N, 001S SEE 25-41-51-23B FOR DET	NP		001
-190H	R22540119900082		. . WATER SYSTEM-WASTE POST VSB A2-254-25-015 used on 001P, 001Q, 001Y SEE 25-41-51-23B FOR DET	NP		001
200A	D2549020513083		. . ELECTRICAL SYSTEM used on 001A, 001C, 001D, 001E, 001J, 001T, 001U SEE 25-41-51-26M FOR DET	NP		001

- ITEM NOT ILLUSTRATED

FIG. ITEM	PART NUMBER	AIRLINE STOCK NUMBER	NOMENCLATURE 1234567		EFF CODE	UNITS PER ASSY
-200B	D2549030402083		. . ELECTRICAL SYSTEM used on 001F, 001K, 001W, 001X SEE 25-41-51-26K FOR DET	NP		001
-200C	D2549030404483		. . ELECTRICAL SYSTEM used on 001G, 001L SEE 25-41-51-26P FOR DET	NP		001
-200D	D2549020810283		. . ELECTRICAL SYSTEM PRE VSB A2-254-25-130 used on 001B, 001H, 001N, 001P, 001Q, 001R, 001S SEE 25-41-51-26P FOR DET	NP		001
-200E	D2549010607283		. . ELECTRICAL SYSTEM used on 001M, 001V SEE 25-41-51-26M FOR DET	NP		001
-200F	R22540119605483		. . ELECTRICAL SYSTEM POST VSB A2-254-25-130 used on 001Y SEE 25-41-51-26P FOR DET	NP		001
210A	D9250000000085		. . ELECTRICAL SYSTEM- COCKPIT DOOR LOCKING used on 001A, 001B, 001C, 001D, 001E, 001F, 001G, 001H, 001J, 001K, 001L, 001M, 001N, 001P, 001Q, 001R, 001S, 001T, 001U, 001V, 001W, 001X, 001Y SEE 25-41-51-310 FOR DET	NP		001

- ITEM NOT ILLUSTRATED

THIS PAGE IS INTENTIONALLY LEFT BLANK

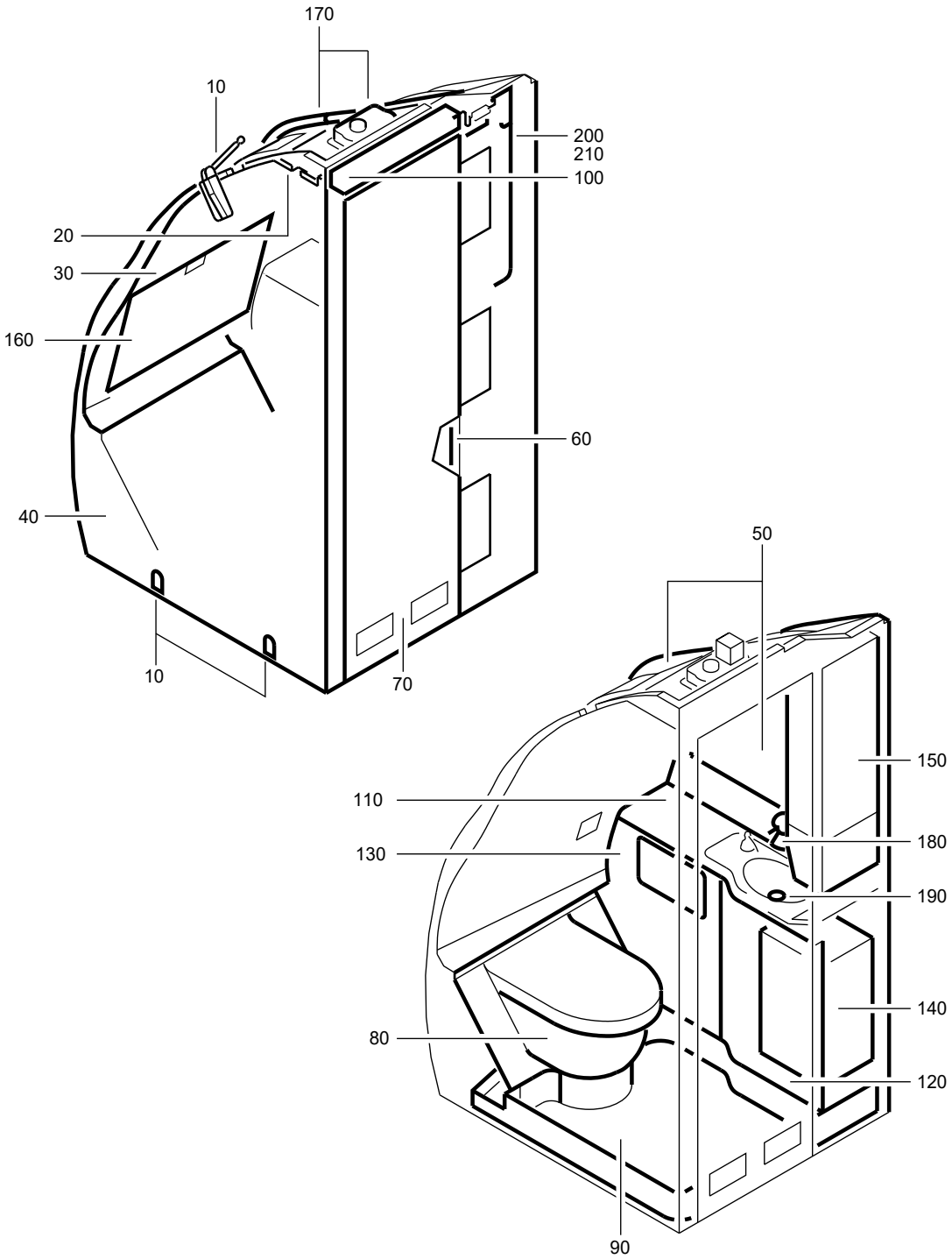

F_PL_254151_41_Y_01_00

LAVATORY A ASSY
Figure 41Y/EN254151SHEET41Y01

FIG. ITEM	PART NUMBER	AIRLINE STOCK NUMBER	NOMENCLATURE 1234567	EFF CODE	UNITS PER ASSY
41Y					
-001A	D2549020807600		. LAVATORY A ASSY SEE SIL 25-117 FOR DET		RF
-001B	D2549020805000		. LAVATORY A ASSY SEE SIL 25-117 FOR DET		RF
-001C	D2549020804200		. LAVATORY A ASSY SEE SIL 25-117 FOR DET		RF
-001D	D2549020806400		. LAVATORY A ASSY SEE SIL 25-117 FOR DET		RF
-001E	D2549020808200		. LAVATORY A ASSY SEE SIL 25-117 FOR DET		RF
-001F	D2549020810000		. LAVATORY A ASSY SEE SIL 25-117 FOR DET		RF
-001G	D2549020811400		. LAVATORY A ASSY PRE VSB A2-254-25-080 SEE SIL 25-117 FOR DET		RF
-001H	D2549020807000		. LAVATORY A ASSY PRE VSB A2-254-25-054 SEE SIL 25-117 FOR DET		RF
-001J	D2549020810600		. LAVATORY A ASSY PRE VSB A2-254-25-080 SEE SIL 25-117 FOR DET		RF
-001K	D2549030404200		. LAVATORY A ASSY SEE SIL 25-117 FOR DET		RF
-001L	D2549030405600		. LAVATORY A ASSY SEE SIL 25-117 FOR DET		RF
-001M	D2549020804800		. LAVATORY A ASSY PRE VSB A2-254-25-039 SEE SIL 25-117 FOR DET		RF

- ITEM NOT ILLUSTRATED

FIG. ITEM	PART NUMBER	AIRLINE STOCK NUMBER	NOMENCLATURE 1234567		EFF CODE	UNITS PER ASSY
-001N	D2549030405600		. LAVATORY A ASSY SEE SIL 25-117 FOR DET			RF
-001P	R225401622-002		. LAVATORY A ASSY POST VSB A2-254-25-039 SEE SIL 25-117 FOR DET			RF
-001Q	R225401609-000		. LAVATORY A ASSY POST VSB A2-254-25-054 SEE SIL 25-117 FOR DET			RF
-001R	R225401647-000		. LAVATORY A ASSY POST VSB A2-254-25-080 SEE SIL 25-117 FOR DET			RF
-001S	R225401646-000		. LAVATORY A ASSY POST VSB A2-254-25-080 SEE SIL 25-117 FOR DET			RF
010A	D2549030608061		. . ATTACHMENT-LAVATORY used on 001A, 001C, 001F, 001G, 001J, 001K, 001M, 001P, 001R, 001S SEE 25-41-51-02C FOR DET	NP		001
-010B	D2549020802461		. . ATTACHMENT-LAVATORY used on 001D SEE 25-41-51-02C FOR DET	NP		001
-010C	D2549030401061		. . ATTACHMENT-LAVATORY used on 001H, 001Q SEE 25-41-51-02D FOR DET	NP		001
-010D	D2549010610061		. . ATTACHMENT-LAVATORY used on 001B, 001E, 001L, 001N SEE 25-41-51-02D FOR DET	NP		001
020A	D2549020602663		. . PANEL-CEILING used on 001A, 001H, 001Q SEE 25-41-51-040 FOR DET	NP		001

- ITEM NOT ILLUSTRATED

FIG. ITEM	PART NUMBER	AIRLINE STOCK NUMBER	NOMENCLATURE 1234567	EFF CODE	UNITS PER ASSY
-020B	D2549030401463		. . PANEL-CEILING NP used on 001B, 001C, 001E, 001F, 001G, 001J, 001K, 001L, 001M, 001N, 001P, 001R, 001S SEE 25-41-51-040 FOR DET		001
-020C	D2549020710063		. . PANEL-CEILING NP used on 001D SEE 25-41-51-040 FOR DET		001
030A	D2549020807664		. . WALL-REAR NP used on 001A SEE 25-41-51-05G FOR DET		001
-030B	D2549030603264		. . WALL-REAR NP used on 001B, 001E, 001H, 001K, 001L, 001M, 001N, 001P, 001Q SEE 25-41-51-05G FOR DET		001
-030C	D2549020804064		. . WALL-REAR NP used on 001C, 001F, 001G, 001J, 001R, 001S SEE 25-41-51-05G FOR DET		001
-030D	D2549020802464		. . WALL-REAR NP used on 001D SEE 25-41-51-05G FOR DET		001
040A	D2549020807665		. . WALL-SIDE NP used on 001A SEE 25-41-51-06Z FOR DET		001
-040B	D2549020809865		. . WALL-SIDE NP used on 001B, 001E SEE 25-41-51-06R FOR DET		001
-040C	D2549020804065		. . WALL-SIDE NP used on 001C SEE 25-41-51-06Z FOR DET		001

- ITEM NOT ILLUSTRATED

FIG. ITEM	PART NUMBER	AIRLINE STOCK NUMBER	NOMENCLATURE 1234567	EFF CODE	UNITS PER ASSY
-040D	D2549020802465		. . WALL-SIDE NP used on 001D SEE 25-41-51-06Z FOR DET		001
-040E	D2549020801465		. . WALL-SIDE NP used on 001M, 001P SEE 25-41-51-480 FOR DET		001
-040F	D2549020810065		. . WALL-SIDE NP PRE VSB A2-254-25-080 used on 001F, 001G, 001J SEE 25-41-51-06Z FOR DET		001
-040G	D2549020714065		. . WALL-SIDE NP PRE VSB A2-254-25-054 used on 001H SEE 25-41-51-06Z FOR DET		001
-040H	D2549030404265		. . WALL-SIDE NP used on 001K SEE 25-41-51-06Z FOR DET		001
-040J	D2549030401465		. . WALL-SIDE NP used on 001L SEE 25-41-51-06Z FOR DET		001
-040K	D2549030401565		. . WALL-SIDE NP used on 001N SEE 25-41-51-06Z FOR DET		001
-040L	R22540160900065		. . WALL-SIDE NP POST VSB A2-254-25-054 used on 001Q SEE 25-41-51-06Z FOR DET		001
-040M	R22540164700065		. . WALL-SIDE NP POST VSB A2-254-25-080 used on 001R, 001S SEE 25-41-51-06Z FOR DET		001

- ITEM NOT ILLUSTRATED

FIG. ITEM	PART NUMBER	AIRLINE STOCK NUMBER	NOMENCLATURE 1234567		EFF CODE	UNITS PER ASSY
050A	D2549020807666		. . HOUSING used on 001A SEE 25-41-51-07S FOR DET	NP		001
-050B	D2549020805066		. . HOUSING used on 001B, 001E SEE 25-41-51-07S FOR DET	NP		001
-050C	D2549020804066		. . HOUSING used on 001C SEE 25-41-51-07S FOR DET	NP		001
-050D	D2549020802466		. . HOUSING used on 001D SEE 25-41-51-07Q FOR DET	NP		001
-050E	D2549020810066		. . HOUSING used on 001F, 001J, 001R SEE 25-41-51-07S FOR DET	NP		001
-050F	D2549020810066		. . HOUSING used on 001G, 001S SEE 25-41-51-07S FOR DET	NP		001
-050G	D2549020714066		. . HOUSING used on 001H, 001Q SEE 25-41-51-07R FOR DET	NP		001
-050H	D2549030404266		. . HOUSING used on 001K, 001M, 001P SEE 25-41-51-07S FOR DET	NP		001
-050J	D2549030401466		. . HOUSING used on 001L SEE 25-41-51-07R FOR DET	NP		001
-050K	D2549030401566		. . HOUSING used on 001N SEE 25-41-51-07R FOR DET	NP		001

- ITEM NOT ILLUSTRATED

FIG. ITEM	PART NUMBER	AIRLINE STOCK NUMBER	NOMENCLATURE 1234567	EFF CODE	UNITS PER ASSY
060A	D2549010500069		. . DOOR INSTL NP used on 001A, 001B, 001C, 001D, 001E, 001F, 001G, 001H, 001J, 001K, 001L, 001M, 001P, 001Q, 001R, 001S SEE 25-41-51-100 FOR DET		001
-060B	D2549020401269		. . DOOR INSTL NP used on 001N SEE 25-41-51-10A FOR DET		001
070A	A225400276-942		. . DOOR ASSY-SINGLE used on 001A SEE 25-41-51-11F FOR DET		001
-070B	A225400278-806		. . DOOR ASSY-SINGLE used on 001B, 001E SEE 25-41-51-11H FOR DET		001
-070C	A225400278-800		. . DOOR ASSY-SINGLE used on 001C SEE 25-41-51-11H FOR DET		001
-070D	A225400276-982		. . DOOR ASSY-SINGLE used on 001D SEE 25-41-51-11J FOR DET		001
-070E	A225400276-934		. . DOOR ASSY-SINGLE used on 001F, 001G, 001J, 001R, 001S SEE 25-41-51-11F FOR DET		001
-070F	A225400276-948		. . DOOR ASSY-SINGLE used on 001H, 001Q SEE 25-41-51-11G FOR DET		001
-070G	A225400278-812		. . DOOR ASSY-SINGLE used on 001K SEE 25-41-51-11K FOR DET		001

- ITEM NOT ILLUSTRATED

FIG. ITEM	PART NUMBER	AIRLINE STOCK NUMBER	NOMENCLATURE 1234567		EFF CODE	UNITS PER ASSY
-070H	A225400276-960		. . DOOR ASSY-SINGLE used on 001L SEE 25-41-51-11J FOR DET			001
-070J	A225400278-514		. . DOOR ASSY-SINGLE PRE VSB A2-254-25-039 used on 001M SEE 25-41-51-11H FOR DET			001
-070K	A2254002768960		. . DOOR ASSY-SINGLE used on 001L, 001N SEE 25-41-51-11J FOR DET			001
-070L	A225400278-578		. . DOOR ASSY-SINGLE POST VSB A2-254-25-039 used on 001P SEE 25-41-51-11H FOR DET			001
080A	D2549020514671		. . TOILET UNIT AND TOILET SHROUD used on 001A SEE 25-41-51-12E FOR DET	NP		001
-080B	D2549020514871		. . TOILET UNIT AND TOILET SHROUD used on 001B, 001E SEE 25-41-51-12E FOR DET	NP		001
-080C	D2549010607071		. . TOILET UNIT AND TOILET SHROUD used on 001C, 001F, 001G, 001H, 001J, 001K, 001L, 001M, 001N, 001P, 001Q, 001R, 001S SEE 25-41-51-12D FOR DET	NP		001
-080D	D2549020510671		. . TOILET UNIT AND TOILET SHROUD used on 001D SEE 25-41-51-12E FOR DET	NP		001

- ITEM NOT ILLUSTRATED

FIG. ITEM	PART NUMBER	AIRLINE STOCK NUMBER	NOMENCLATURE 1234567	EFF CODE	UNITS PER ASSY
090A	D2549020807672		. . PAN-FLOOR NP used on 001A SEE 25-41-51-13J FOR DET		001
-090B	D2549030602472		. . PAN-FLOOR NP used on 001B, 001E SEE 25-41-51-13T FOR DET		001
-090C	D2549030400672		. . PAN-FLOOR NP used on 001C SEE 25-41-51-13K FOR DET		001
-090D	D2549020806472		. . PAN-FLOOR NP used on 001D SEE 25-41-51-13L FOR DET		001
-090E	D2549020810072		. . PAN-FLOOR NP used on 001F, 001G, 001J, 001R, 001S SEE 25-41-51-13J FOR DET		001
-090F	D2549020714072		. . PAN-FLOOR NP used on 001H, 001Q SEE 25-41-51-13D FOR DET		001
-090G	D2549030404272		. . PAN-FLOOR NP used on 001K SEE 25-41-51-13J FOR DET		001
-090H	D2549030401472		. . PAN-FLOOR NP used on 001L SEE 25-41-51-13J FOR DET		001
-090J	D2549020804872		. . PAN-FLOOR NP PRE VSB A2-254-25-039 used on 001M SEE 25-41-51-13K FOR DET		001
-090K	D2549010514272		. . PAN-FLOOR NP used on 001N SEE 25-41-51-13T FOR DET		001

- ITEM NOT ILLUSTRATED

FIG. ITEM	PART NUMBER	AIRLINE STOCK NUMBER	NOMENCLATURE 1234567	EFF CODE	UNITS PER ASSY
-090L	R22540162200272		. . PAN-FLOOR NP POST VSB A2-254-25-039 used on 001P SEE 25-41-51-13K FOR DET		001
100A	D2549010512673		. . LIGHT-DOOR NP used on 001A, 001B, 001C, 001E, 001F, 001G, 001H, 001J, 001K, 001L, 001M, 001N, 001P, 001Q, 001R, 001S SEE 25-41-51-140 FOR DET		001
-100B	D2549020710073		. . LIGHT-DOOR NP used on 001D SEE 25-41-51-14A FOR DET		001
110A	D2549020706274		. . WASHBASIN UNIT NP used on 001A, 001C, 001H, 001Q SEE 25-41-51-15C FOR DET		001
-110B	D2549010603674		. . WASHBASIN UNIT NP used on 001B SEE 25-41-51-15C FOR DET		001
-110C	D2549030506074		. . WASHBASIN UNIT NP used on 001D SEE 25-41-51-15C FOR DET		001
-110D	D2549020808274		. . WASHBASIN UNIT NP used on 001E SEE 25-41-51-15H FOR DET		001
-110E	D2549030509874		. . WASHBASIN UNIT NP used on 001F, 001G, 001S SEE 25-41-51-15G FOR DET		001
-110F	D2549030509874		. . WASHBASIN UNIT NP used on 001J, 001R SEE 25-41-51-15G FOR DET		001

- ITEM NOT ILLUSTRATED

FIG. ITEM	PART NUMBER	AIRLINE STOCK NUMBER	NOMENCLATURE 1234567		EFF CODE	UNITS PER ASSY
-110G	D2549030514674		. . WASHBASIN UNIT PRE VSB A2-254-25-039 used on 001K, 001L, 001M, 001N SEE 25-41-51-15G FOR DET	NP		001
-110H	R22540162200274		. . WASHBASIN UNIT POST VSB A2-254-25-039 used on 001P SEE 25-41-51-15G FOR DET	NP		001
120A	D2549020607675		. . DOOR ASSY-WASHBASIN UNIT used on 001A SEE 25-41-51-16C FOR DET	NP		001
-120B	D2549020607075		. . DOOR ASSY-WASHBASIN UNIT used on 001B, 001C, 001H, 001J, 001K, 001L, 001M, 001N, 001P, 001Q, 001R SEE 25-41-51-16B FOR DET	NP		001
-120C	D2549020710075		. . DOOR ASSY-WASHBASIN UNIT used on 001D SEE 25-41-51-16C FOR DET	NP		001
-120D	D2549030606075		. . DOOR ASSY-WASHBASIN UNIT used on 001E, 001F, 001G, 001S SEE 25-41-51-16E FOR DET	NP		001
130A	D2549020607676		. . PANEL ASSY-WASHBASIN UNIT used on 001A SEE 25-41-51-17C FOR DET	NP		001

- ITEM NOT ILLUSTRATED

FIG. ITEM	PART NUMBER	AIRLINE STOCK NUMBER	NOMENCLATURE 1234567		EFF CODE	UNITS PER ASSY
-130B	D2549030504876		. . PANEL ASSY-WASHBASIN UNIT used on 001B, 001C, 001E, 001F, 001G, 001H, 001J, 001K, 001L, 001M, 001N, 001P, 001Q, 001R, 001S SEE 25-41-51-17C FOR DET	NP		001
-130C	D2549020710076		. . PANEL ASSY-WASHBASIN UNIT used on 001D SEE 25-41-51-17D FOR DET	NP		001
140A	D2549030504877		. . BIN-WASTE,CHUTE-WASTE AND EXTINGUISHER-FIRE used on 001A SEE 25-41-51-180 FOR DET	NP		001
-140B	D2549010611677		. . BIN-WASTE,CHUTE-WASTE AND EXTINGUISHER-FIRE used on 001B, 001C, 001D, 001E, 001F, 001G, 001H, 001J, 001K, 001L, 001M, 001N, 001Q, 001R, 001S SEE 25-41-51-180 FOR DET	NP		001
150A	D2549030504878		. . CABINET-SERVICE PRE VSB A2-254-25-039 PRE VSB A2-254-25-054 PRE VSB A2-254-25-080 used on 001A, 001B, 001E, 001F, 001G, 001H, 001J, 001K, 001L, 001M, 001N SEE 25-41-51-19E FOR DET	NP		001
-150B	D2549030504078		. . CABINET-SERVICE used on 001C SEE 25-41-51-19E FOR DET	NP		001

- ITEM NOT ILLUSTRATED

FIG. ITEM	PART NUMBER	AIRLINE STOCK NUMBER	NOMENCLATURE 1234567	EFF CODE	UNITS PER ASSY
-150C	D2549020710078		. . CABINET-SERVICE NP used on 001D SEE 25-41-51-19F FOR DET		001
-150D	R22540163900078		. . CABINET-SERVICE NP POST VSB A2-254-25-039 used on 001P SEE 25-41-51-19E FOR DET		001
-150E	R22540119500078		. . CABINET-SERVICE NP POST VSB A2-254-25-054 used on 001Q SEE 25-41-51-19E FOR DET		001
-150F	R22540114500278		. . CABINET-SERVICE NP POST VSB A2-254-25-080 used on 001R, 001S SEE 25-41-51-19E FOR DET		001
160A	D2549010512679		. . TABLE-NURSING NP used on 001A, 001M, 001P SEE 25-41-51-20A FOR DET		001
-160B	D2549010510679		. . TABLE-NURSING NP used on 001B, 001C, 001E, 001F, 001G, 001H, 001J, 001K, 001L, 001N, 001Q, 001R, 001S SEE 25-41-51-20A FOR DET		001
-160C	D2549020710079		. . TABLE-NURSING NP used on 001D SEE 25-41-51-20B FOR DET		001
170A	D2549020802680		. . VENTILATION SYSTEM NP used on 001A, 001B, 001C, 001E, 001F, 001G, 001H, 001J, 001K, 001L, 001M, 001N, 001P, 001Q, 001R, 001S SEE 25-41-51-21B FOR DET		001

- ITEM NOT ILLUSTRATED

FIG. ITEM	PART NUMBER	AIRLINE STOCK NUMBER	NOMENCLATURE 1234567		EFF CODE	UNITS PER ASSY
-170B	D2549020510680		. . VENTILATION SYSTEM used on 001D SEE 25-41-51-21B FOR DET	NP		001
180A	D2549010606081		. . WATER SYSTEM-POTABLE used on 001A, 001B, 001D, 001E, 001F, 001G, 001H, 001J, 001L, 001M, 001N, 001P, 001Q, 001R, 001S SEE 25-41-51-22D FOR DET	NP		001
-180B	D2549030402081		. . WATER SYSTEM-POTABLE used on 001C, 001K SEE 25-41-51-22G FOR DET	NP		001
190A	D2549010511082		. . WATER SYSTEM-WASTE used on 001A, 001B, 001L, 001M, 001N, 001P SEE 25-41-51-23B FOR DET	NP		001
-190B	D2549030405082		. . WATER SYSTEM-WASTE used on 001C SEE 25-41-51-23B FOR DET	NP		001
-190C	D2549030504882		. . WATER SYSTEM-WASTE used on 001D SEE 25-41-51-23B FOR DET	NP		001
-190D	D2549020800882		. . WATER SYSTEM-WASTE used on 001E, 001F, 001G, 001H, 001J, 001Q, 001R, 001S SEE 25-41-51-23D FOR DET	NP		001
-190E	D2549020507282		. . WATER SYSTEM-WASTE used on 001K SEE 25-41-51-23B FOR DET	NP		001
200A	D2549020513083		. . ELECTRICAL SYSTEM used on 001A, 001C, 001H, 001K, 001M, 001P, 001Q SEE 25-41-51-26M FOR DET	NP		001

- ITEM NOT ILLUSTRATED

FIG. ITEM	PART NUMBER	AIRLINE STOCK NUMBER	NOMENCLATURE 1234567		EFF CODE	UNITS PER ASSY
-200B	D2549020514883		. . ELECTRICAL SYSTEM used on 001B, 001E SEE 25-41-51-26N FOR DET	NP		001
-200C	D2549020810083		. . ELECTRICAL SYSTEM used on 001F, 001G, 001S SEE 25-41-51-26M FOR DET	NP		001
-200D	D2549020810283		. . ELECTRICAL SYSTEM used on 001L, 001N SEE 25-41-51-26P FOR DET	NP		001
-200E	D2549010607283		. . ELECTRICAL SYSTEM used on 001D, 001J, 001R SEE 25-41-51-26M FOR DET	NP		001
210A	D9250000000085		. . ELECTRICAL SYSTEM- COCKPIT DOOR LOCKING used on 001A, 001B, 001C, 001D, 001E, 001F, 001G, 001H, 001J, 001K, 001L, 001M, 001N, 001Q, 001R, 001S SEE 25-41-51-310 FOR DET	NP		001

- ITEM NOT ILLUSTRATED

THIS PAGE IS INTENTIONALLY LEFT BLANK

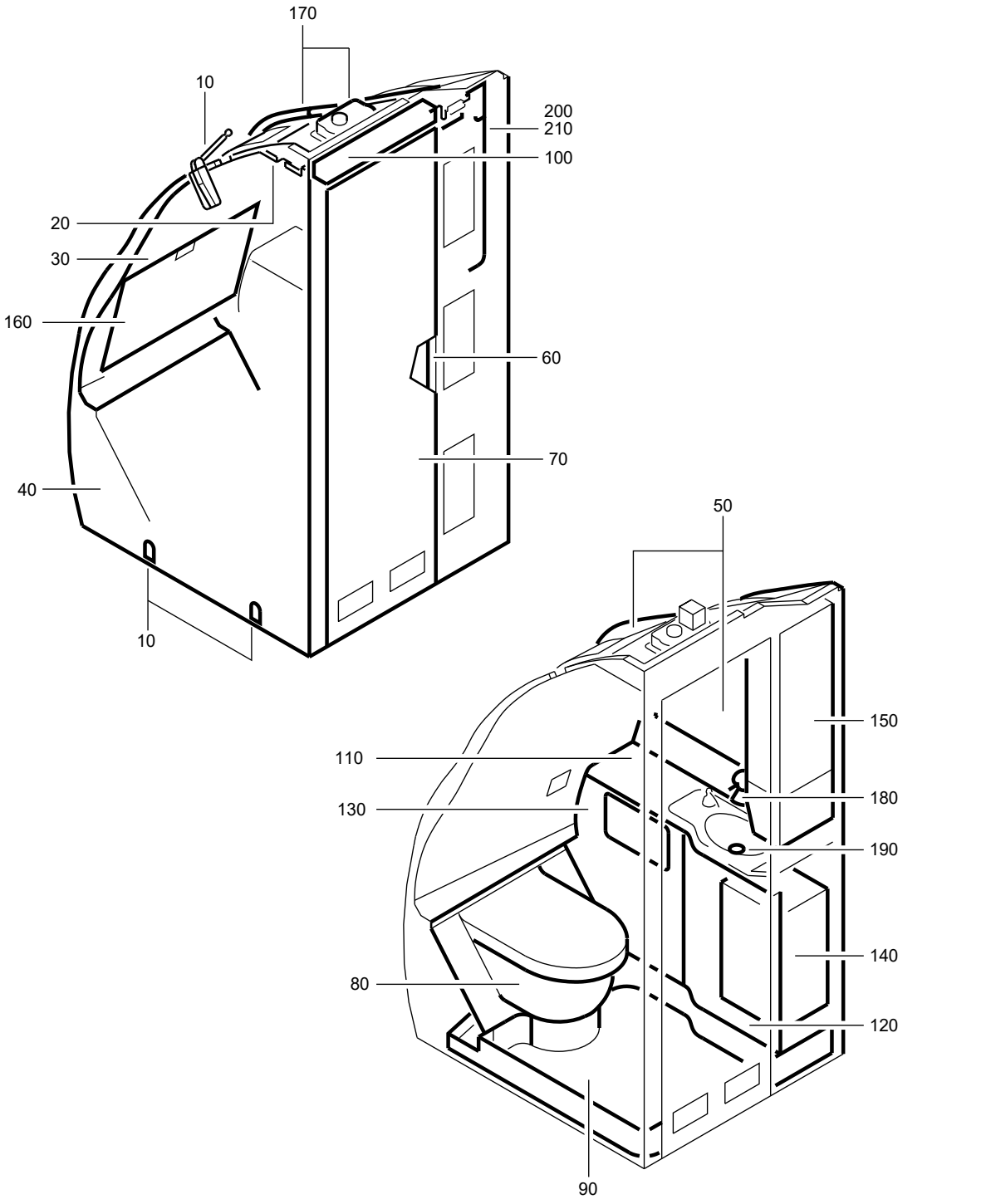

F_PL_254151_41_Z_01_00

LAVATORY A ASSY
Figure 41Z/EN254151SHEET41Z01

FIG. ITEM	PART NUMBER	AIRLINE STOCK NUMBER	NOMENCLATURE 1234567	EFF CODE	UNITS PER ASSY
41Z					
-001A	D2549010612400		. LAVATORY A ASSY SEE SIL 25-117 FOR DET		RF
-001B	D2549030400600		. LAVATORY A ASSY SEE SIL 25-117 FOR DET		RF
-001C	D2549020806800		. LAVATORY A ASSY SEE SIL 25-117 FOR DET		RF
-001D	D2549010611800		. LAVATORY A ASSY SEE SIL 25-117 FOR DET		RF
-001E	D2549030404800		. LAVATORY A ASSY PRE VSB A2-254-25-064 SEE SIL 25-117 FOR DET		RF
-001F	D2549020811600		. LAVATORY A ASSY SEE SIL 25-117 FOR DET		RF
-001G	D2549010613200		. LAVATORY A ASSY SEE SIL 25-117 FOR DET		RF
-001H	D2549010613400		. LAVATORY A ASSY SEE SIL 25-117 FOR DET		RF
-001J	D2549010612600		. LAVATORY A ASSY SEE SIL 25-117 FOR DET		RF
-001K	D2549030405000		. LAVATORY A ASSY SEE SIL 25-117 FOR DET		RF
-001L	D2549030401800		. LAVATORY A ASSY SEE SIL 25-117 FOR DET		RF
-001M	D2549010402000		. LAVATORY A ASSY SEE SIL 25-117 FOR DET		RF
-001N	D2549010612600		. LAVATORY A ASSY SEE SIL 25-117 FOR DET		RF

- ITEM NOT ILLUSTRATED

FIG. ITEM	PART NUMBER	AIRLINE STOCK NUMBER	NOMENCLATURE 1234567		EFF CODE	UNITS PER ASSY
-001P	R225401648-000		. LAVATORY A ASSY POST VSB A2-254-25-064			RF
010A	D2549030608061		. . ATTACHMENT-LAVATORY used on 001A, 001B, 001C, 001D, 001E, 001F, 001H, 001P SEE 25-41-51-02C FOR DET	NP		001
-010B	D2549010613861		. . ATTACHMENT-LAVATORY used on 001G, 001J, 001K, 001L, 001M, 001N SEE 25-41-51-02C FOR DET	NP		001
020A	D2549030401463		. . PANEL-CEILING used on 001A, 001B, 001C, 001D, 001E, 001F, 001H, 001J, 001K, 001L, 001M, 001N, 001P SEE 25-41-51-040 FOR DET	NP		001
-020B	D2549020610263		. . PANEL-CEILING used on 001G SEE 25-41-51-040 FOR DET	NP		001
030A	D2549030603264		. . WALL-REAR used on 001A, 001D, 001F, 001H SEE 25-41-51-05G FOR DET	NP		001
-030B	D2549020804064		. . WALL-REAR used on 001B SEE 25-41-51-05G FOR DET	NP		001
-030C	D2549020806864		. . WALL-REAR used on 001C, 001E, 001P SEE 25-41-51-05F FOR DET	NP		001
-030D	D2549010613264		. . WALL-REAR used on 001G SEE 25-41-51-05H FOR DET	NP		001

- ITEM NOT ILLUSTRATED

FIG. ITEM	PART NUMBER	AIRLINE STOCK NUMBER	NOMENCLATURE 1234567	EFF CODE	UNITS PER ASSY
-030E	D2549020805464		. . WALL-REAR NP used on 001J, 001K, 001L, 001M, 001N SEE 25-41-51-05H FOR DET		001
040A	D2549010612465		. . WALL-SIDE NP used on 001A, 001L SEE 25-41-51-48B FOR DET		001
-040B	D2549030400665		. . WALL-SIDE NP used on 001B SEE 25-41-51-480 FOR DET		001
-040C	D2549020806865		. . WALL-SIDE NP used on 001C SEE 25-41-51-48B FOR DET		001
-040D	D2549010611865		. . WALL-SIDE NP used on 001D SEE 25-41-51-06R FOR DET		001
-040E	D2549030404865		. . WALL-SIDE NP used on 001E, 001P SEE 25-41-51-480 FOR DET		001
-040F	D2549020811665		. . WALL-SIDE NP used on 001F, 001H, 001J, 001N SEE 25-41-51-48B FOR DET		001
-040G	D2549010613265		. . WALL-SIDE NP used on 001G SEE 25-41-51-480 FOR DET		001
-040H	D2549030404265		. . WALL-SIDE NP used on 001K SEE 25-41-51-06Z FOR DET		001
-040J	D2549010613865		. . WALL-SIDE NP used on 001M SEE 25-41-51-06Z FOR DET		001

- ITEM NOT ILLUSTRATED

FIG. ITEM	PART NUMBER	AIRLINE STOCK NUMBER	NOMENCLATURE 1234567	EFF CODE	UNITS PER ASSY
050A	D2549020807666		. . HOUSING NP used on 001A SEE 25-41-51-07S FOR DET		001
-050B	D2549020804066		. . HOUSING NP used on 001B SEE 25-41-51-07S FOR DET		001
-050C	D2549020806866		. . HOUSING NP used on 001C SEE 25-41-51-07S FOR DET		001
-050D	D2549020805066		. . HOUSING NP used on 001D SEE 25-41-51-07S FOR DET		001
-050E	D2549020806066		. . HOUSING NP used on 001E, 001P SEE 25-41-51-07S FOR DET		001
-050F	D2549020811666		. . HOUSING NP used on 001F SEE 25-41-51-07S FOR DET		001
-050G	D2549010613266		. . HOUSING NP used on 001G SEE 25-41-51-07S FOR DET		001
-050H	D2549010613466		. . HOUSING NP used on 001H SEE 25-41-51-07S FOR DET		001
-050J	D2549030405066		. . HOUSING NP used on 001K SEE 25-41-51-07U FOR DET		001
-050K	D2549010400466		. . HOUSING NP used on 001L SEE 25-41-51-07T FOR DET		001

- ITEM NOT ILLUSTRATED

FIG. ITEM	PART NUMBER	AIRLINE STOCK NUMBER	NOMENCLATURE 1234567		EFF CODE	UNITS PER ASSY
-050L	D2549010400266		. . HOUSING used on 001J, 001N SEE 25-41-51-07U FOR DET	NP		001
-050M	D2549010613666		. . HOUSING used on 001M SEE 25-41-51-49B FOR DET	NP		001
060A	D2549010500069		. . DOOR INSTL used on 001A, 001B, 001C, 001D, 001E, 001F, 001G, 001H, 001J, 001K, 001L, 001N, 001P SEE 25-41-51-100 FOR DET	NP		001
-060B	D2549020401269		. . DOOR INSTL used on 001M SEE 25-41-51-10A FOR DET	NP		001
070A	A225400276-540		. . DOOR ASSY-SINGLE used on 001A, 001L SEE 25-41-51-11L FOR DET			001
-070B	A225400278-800		. . DOOR ASSY-SINGLE used on 001B SEE 25-41-51-11H FOR DET			001
-070C	A225400276-966		. . DOOR ASSY-SINGLE used on 001C SEE 25-41-51-11J FOR DET			001
-070D	A225400276-928		. . DOOR ASSY-SINGLE used on 001D SEE 25-41-51-11F FOR DET			001
-070E	A225400276-514		. . DOOR ASSY-SINGLE used on 001E, 001P SEE 25-41-51-11D FOR DET			001
-070F	A225400278-816		. . DOOR ASSY-SINGLE used on 001H SEE 25-41-51-11K FOR DET			001

- ITEM NOT ILLUSTRATED

FIG. ITEM	PART NUMBER	AIRLINE STOCK NUMBER	NOMENCLATURE 1234567		EFF CODE	UNITS PER ASSY
-070G	A225400278-530		. . DOOR ASSY-SINGLE used on 001G SEE 25-41-51-11K FOR DET			001
-070H	A225400276-964		. . DOOR ASSY-SINGLE used on 001K SEE 25-41-51-11J FOR DET			001
-070J	A225400278-900		. . DOOR ASSY-SINGLE used on 001F, 001J, 001N SEE 25-41-51-11K FOR DET			001
-070K	A2254002768942		. . DOOR ASSY-SINGLE used on 001M SEE 25-41-51-11F FOR DET			001
080A	D2549010607071		. . TOILET UNIT AND TOILET SHROUD used on 001A, 001B, 001G, 001K, 001L SEE 25-41-51-12D FOR DET	NP		001
-080B	D2549020513071		. . TOILET UNIT AND TOILET SHROUD used on 001C SEE 25-41-51-12D FOR DET	NP		001
-080C	D2549020514871		. . TOILET UNIT AND TOILET SHROUD used on 001D SEE 25-41-51-12E FOR DET	NP		001
-080D	D2549030404871		. . TOILET UNIT AND TOILET SHROUD used on 001E, 001P SEE 25-41-51-12F FOR DET	NP		001
-080E	D2549020512271		. . TOILET UNIT AND TOILET SHROUD used on 001J SEE 25-41-51-12D FOR DET	NP		001

- ITEM NOT ILLUSTRATED

FIG. ITEM	PART NUMBER	AIRLINE STOCK NUMBER	NOMENCLATURE 1234567		EFF CODE	UNITS PER ASSY
-080F	D2549020514671		. . TOILET UNIT AND TOILET SHROUD used on 001M SEE 25-41-51-12E FOR DET	NP		001
-080G	D2549010613471		. . TOILET UNIT AND TOILET SHROUD used on 001F, 001H, 001N SEE 25-41-51-12D FOR DET	NP		001
090A	D2549030405072		. . PAN-FLOOR used on 001K SEE 25-41-51-13K FOR DET	NP		001
-090B	D2549030400672		. . PAN-FLOOR used on 001B SEE 25-41-51-13K FOR DET	NP		001
-090C	D2549030404272		. . PAN-FLOOR used on 001C SEE 25-41-51-13J FOR DET	NP		001
-090D	D2549010605672		. . PAN-FLOOR used on 001D SEE 25-41-51-13E FOR DET	NP		001
-090E	D2549020807672		. . PAN-FLOOR used on 001E, 001P SEE 25-41-51-13J FOR DET	NP		001
-090F	D2549020811672		. . PAN-FLOOR used on 001F, 001H, 001J, 001N SEE 25-41-51-13K FOR DET	NP		001
-090G	D2549010613272		. . PAN-FLOOR used on 001A, 001G, 001L SEE 25-41-51-13K FOR DET	NP		001
-090H	D2549010514272		. . PAN-FLOOR used on 001M SEE 25-41-51-13T FOR DET	NP		001

- ITEM NOT ILLUSTRATED

FIG. ITEM	PART NUMBER	AIRLINE STOCK NUMBER	NOMENCLATURE 1234567		EFF CODE	UNITS PER ASSY
100A	D2549010512673		. . LIGHT-DOOR used on 001A, 001B, 001C, 001D, 001E, 001F, 001H, 001J, 001K, 001L, 001M, 001N, 001P SEE 25-41-51-140 FOR DET	NP		001
-100B	D2549020612273		. . LIGHT-DOOR used on 001G SEE 25-41-51-14A FOR DET	NP		001
110A	D2549030514674		. . WASHBASIN UNIT used on 001A, 001B, 001K, 001L SEE 25-41-51-15G FOR DET	NP		001
-110B	D2549020704674		. . WASHBASIN UNIT used on 001C SEE 25-41-51-15G FOR DET	NP		001
-110C	D2549020700674		. . WASHBASIN UNIT used on 001D SEE 25-41-51-15G FOR DET	NP		001
-110D	D2549020706274		. . WASHBASIN UNIT used on 001E, 001G, 001P SEE 25-41-51-15C FOR DET	NP		001
-110E	D2549020706674		. . WASHBASIN UNIT used on 001F, 001H, 001J, 001N SEE 25-41-51-15D FOR DET	NP		001
-110F	D2549020403874		. . WASHBASIN UNIT used on 001M SEE 25-41-51-15K FOR DET	NP		001
120A	D2549020607075		. . DOOR ASSY-WASHBASIN UNIT used on 001A, 001G SEE 25-41-51-16B FOR DET	NP		001

- ITEM NOT ILLUSTRATED

FIG. ITEM	PART NUMBER	AIRLINE STOCK NUMBER	NOMENCLATURE 1234567		EFF CODE	UNITS PER ASSY
-120B	D2549030606075		. . DOOR ASSY-WASHBASIN UNIT used on 001B, 001D, 001K, 001L SEE 25-41-51-16E FOR DET	NP		001
-120C	D2549020605475		. . DOOR ASSY-WASHBASIN UNIT used on 001C SEE 25-41-51-16C FOR DET	NP		001
-120D	D2549030504675		. . DOOR ASSY-WASHBASIN UNIT used on 001E, 001P SEE 25-41-51-16B FOR DET	NP		001
-120E	D2549010603675		. . DOOR ASSY-WASHBASIN UNIT used on 001F, 001H, 001J, 001N SEE 25-41-51-16C FOR DET	NP		001
-120F	D2549020607675		. . DOOR ASSY-WASHBASIN UNIT used on 001M SEE 25-41-51-16C FOR DET	NP		001
130A	D2549030504876		. . PANEL ASSY-WASHBASIN UNIT used on 001A, 001B, 001D, 001G, 001K, 001L SEE 25-41-51-17C FOR DET	NP		001
-130B	D2549020605476		. . PANEL ASSY-WASHBASIN UNIT used on 001C SEE 25-41-51-17D FOR DET	NP		001
-130C	D2549030504676		. . PANEL ASSY-WASHBASIN UNIT used on 001E, 001P SEE 25-41-51-17C FOR DET	NP		001

- ITEM NOT ILLUSTRATED

FIG. ITEM	PART NUMBER	AIRLINE STOCK NUMBER	NOMENCLATURE 1234567		EFF CODE	UNITS PER ASSY
-130D	D2549010603676		. . PANEL ASSY-WASHBASIN UNIT used on 001F, 001H, 001J, 001N SEE 25-41-51-17D FOR DET	NP		001
-130E	D2549020607676		. . PANEL ASSY-WASHBASIN UNIT used on 001M SEE 25-41-51-17C FOR DET	NP		001
140A	D2549010611677		. . BIN-WASTE,CHUTE-WASTE AND EXTINGUISHER-FIRE used on 001A, 001B, 001C, 001D, 001E, 001F, 001G, 001H, 001J, 001K, 001L, 001M, 001N, 001P SEE 25-41-51-180 FOR DET	NP		001
150A	D2549030504078		. . CABINET-SERVICE used on 001A, 001B, 001E, 001L, 001P SEE 25-41-51-19E FOR DET	NP		001
-150B	D2549030504878		. . CABINET-SERVICE used on 001C, 001D, 001F, 001H, 001J, 001K, 001M, 001N SEE 25-41-51-19E FOR DET	NP		001
-150C	D2549010613278		. . CABINET-SERVICE used on 001G SEE 25-41-51-19F FOR DET	NP		001
160A	D2549010510679		. . TABLE-NURSING used on 001A, 001B, 001C, 001D, 001F, 001H, 001J, 001K, 001L, 001M, 001N SEE 25-41-51-20A FOR DET	NP		001
-160B	D2549010512679		. . TABLE-NURSING used on 001E, 001P SEE 25-41-51-20A FOR DET	NP		001

- ITEM NOT ILLUSTRATED

FIG. ITEM	PART NUMBER	AIRLINE STOCK NUMBER	NOMENCLATURE 1234567		EFF CODE	UNITS PER ASSY
-160C	D2549010613279		. . TABLE-NURSING used on 001G SEE 25-41-51-20B FOR DET	NP		001
170A	D2549020802680		. . VENTILATION SYSTEM used on 001A, 001B, 001C, 001D, 001E, 001F, 001H, 001J, 001K, 001L, 001M, 001N, 001P SEE 25-41-51-21B FOR DET	NP		001
-170B	D2549030614680		. . VENTILATION SYSTEM used on 001G SEE 25-41-51-21B FOR DET	NP		001
180A	D2549010606081		. . WATER SYSTEM-POTABLE used on 001A, 001C, 001D, 001E, 001F, 001G, 001H, 001J, 001L, 001M, 001N, 001P SEE 25-41-51-22D FOR DET	NP		001
-180B	D2549030608281		. . WATER SYSTEM-POTABLE used on 001B SEE 25-41-51-22G FOR DET	NP		001
-180C	D2549030402081		. . WATER SYSTEM-POTABLE used on 001K SEE 25-41-51-22G FOR DET	NP		001
190A	D2549010511082		. . WATER SYSTEM-WASTE used on 001A, 001D, 001E, 001F, 001G, 001H, 001J, 001L, 001N, 001P SEE 25-41-51-23B FOR DET	NP		001
-190B	D2549020507282		. . WATER SYSTEM-WASTE used on 001B SEE 25-41-51-23B FOR DET	NP		001
-190C	D2549030504882		. . WATER SYSTEM-WASTE used on 001C SEE 25-41-51-23B FOR DET	NP		001

- ITEM NOT ILLUSTRATED

FIG. ITEM	PART NUMBER	AIRLINE STOCK NUMBER	NOMENCLATURE 1234567		EFF CODE	UNITS PER ASSY
-190D	D2549030405082		. . WATER SYSTEM-WASTE used on 001K SEE 25-41-51-23B FOR DET	NP		001
-190E	D2549020800882		. . WATER SYSTEM-WASTE used on 001M SEE 25-41-51-23D FOR DET	NP		001
200A	D2549020513083		. . ELECTRICAL SYSTEM used on 001A, 001B, 001C, 001E, 001F, 001H, 001J, 001K, 001L, 001M, 001N, 001P SEE 25-41-51-26M FOR DET	NP		001
-200B	D2549020514883		. . ELECTRICAL SYSTEM used on 001D SEE 25-41-51-26N FOR DET	NP		001
-200C	D2549010607283		. . ELECTRICAL SYSTEM used on 001G SEE 25-41-51-26M FOR DET	NP		001
210A	D9250000000085		. . ELECTRICAL SYSTEM-COCKPIT DOOR LOCKING used on 001A, 001B, 001C, 001D, 001E, 001F, 001G, 001H, 001J, 001K, 001L, 001N, 001P SEE 25-41-51-310 FOR DET	NP		001
-210B	D9250000000185		. . ELECTRICAL SYSTEM-COCKPIT DOOR LOCKING used on 001M SEE 25-41-51-31A FOR DET	NP		001

- ITEM NOT ILLUSTRATED

THIS PAGE IS INTENTIONALLY LEFT BLANK

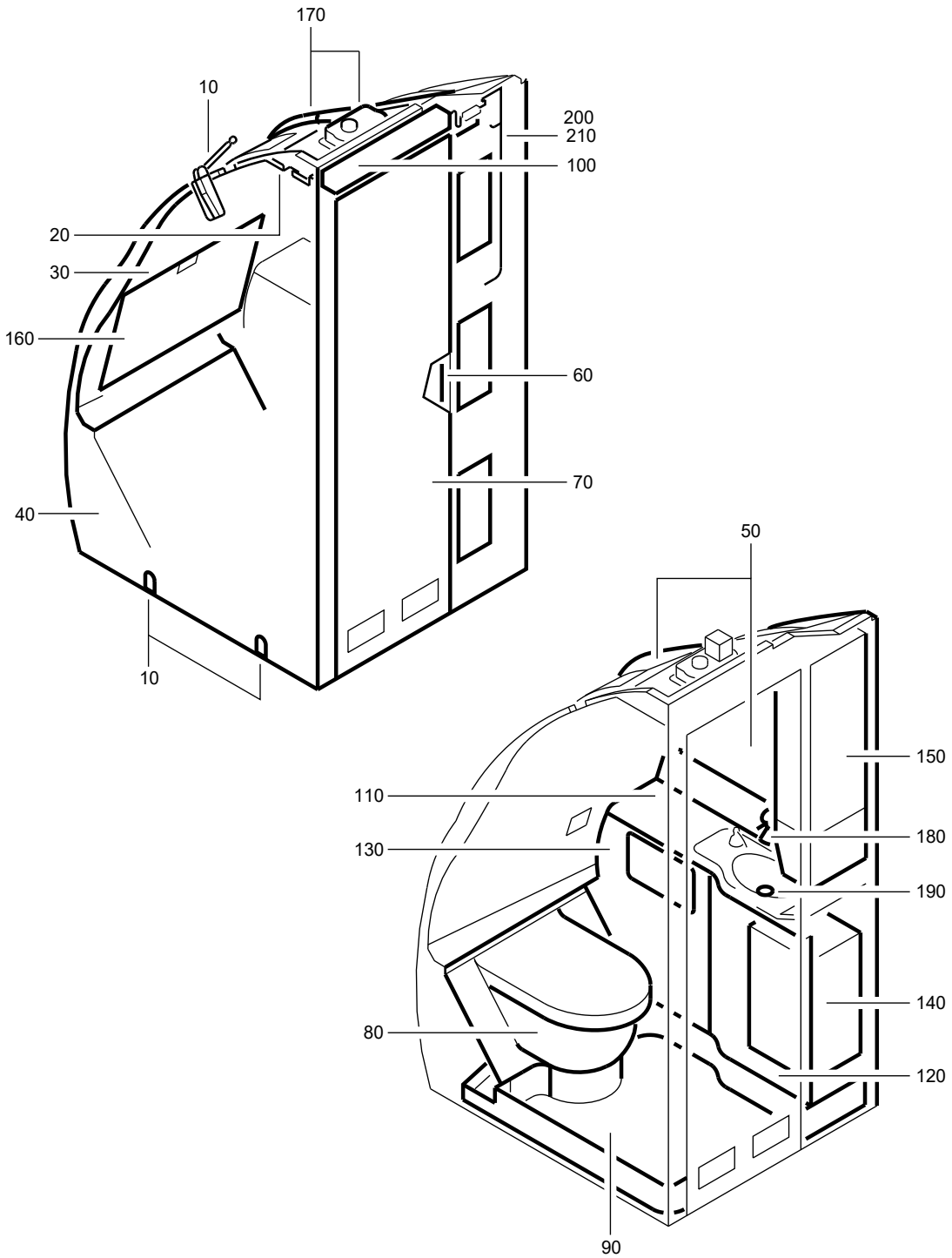

F_PL_254151_42_0_01_00

LAVATORY A ASSY
Figure 42/EN254151SHEET42001

FIG. ITEM	PART NUMBER	AIRLINE STOCK NUMBER	NOMENCLATURE 1234567	EFF CODE	UNITS PER ASSY
42					
-001A	D2549030404600		. LAVATORY A ASSY PRE VSB A2-254-25-046 SEE SIL 25-117 FOR DET		RF
-001B	D2549020807400		. LAVATORY A ASSY PRE VSB A2-254-25-054 SEE SIL 25-117 FOR DET		RF
-001C	D2549020811800		. LAVATORY A ASSY PRE VSB A2-254-25-042 SEE SIL 25-117 FOR DET		RF
-001D	D2549020805800		. LAVATORY A ASSY PRE VSB A2-254-25-042 SEE SIL 25-117 FOR DET		RF
-001E	D2549020813800		. LAVATORY A ASSY PRE VSB A2-254-25-042 SEE SIL 25-117 FOR DET		RF
-001F	D2549030407200		. LAVATORY A ASSY SEE SIL 25-117 FOR DET		RF
-001G	D2549010611400		. LAVATORY A ASSY SEE SIL 25-117 FOR DET		RF
-001H	D2549010614200		. LAVATORY A ASSY SEE SIL 25-117 FOR DET		RF
-001J	D2549030404000		. LAVATORY A ASSY SEE SIL 25-117 FOR DET		RF
-001K	D2549020813600		. LAVATORY A ASSY SEE SIL 25-117 FOR DET		RF
-001L	D2549030407400		. LAVATORY A ASSY PRE VSB A2-254-25-045 SEE SIL 25-117 FOR DET		RF

- ITEM NOT ILLUSTRATED

FIG. ITEM	PART NUMBER	AIRLINE STOCK NUMBER	NOMENCLATURE 1234567	EFF CODE	UNITS PER ASSY
-001M	D2549020406200		. LAVATORY A ASSY PRE VSB A2-254-25-042 SEE SIL 25-117 FOR DET		RF
-001N	D2549030404000		. LAVATORY A ASSY SEE SIL 25-117 FOR DET		RF
-001P	R225401196-012		. LAVATORY A ASSY PRE VSB A2-254-25-130 POST VSB A2-254-25-042 SEE SIL 25-117 FOR DET		RF
-001Q	R225401196-014		. LAVATORY A ASSY PRE VSB A2-254-25-130 POST VSB A2-254-25-042 SEE SIL 25-117 FOR DET		RF
-001R	R225401152-008		. LAVATORY A ASSY POST VSB A2-254-25-042 SEE SIL 25-117 FOR DET		RF
-001S	R225401196-016		. LAVATORY A ASSY PRE VSB A2-254-25-130 POST VSB A2-254-25-042 SEE SIL 25-117 FOR DET		RF
-001T	R225401168-026		. LAVATORY A ASSY POST VSB A2-254-25-054 SEE SIL 25-117 FOR DET		RF
-001U	R225401199-010		. LAVATORY A ASSY POST VSB A2-254-25-045 SEE SIL 25-117 FOR DET		RF
-001V	R225401134-036		. LAVATORY A ASSY POST VSB A2-254-25-046		RF
-001W	R225401196-058		. LAVATORY A ASSY POST VSB A2-254-25-130 SEE SIL 25-117 FOR DET		RF

- ITEM NOT ILLUSTRATED

FIG. ITEM	PART NUMBER	AIRLINE STOCK NUMBER	NOMENCLATURE 1234567		EFF CODE	UNITS PER ASSY
-001X	R225401196-060		. LAVATORY A ASSY POST VSB A2-254-25-130 SEE SIL 25-117 FOR DET			RF
-001Y	R225401196-062		. LAVATORY A ASSY POST VSB A2-254-25-130 SEE SIL 25-117 FOR DET			RF
010A	D2549030612861		. . ATTACHMENT-LAVATORY used on 001A, 001V SEE 25-41-51-02C FOR DET	NP		001
-010B	D2549020512461		. . ATTACHMENT-LAVATORY used on 001B, 001T SEE 25-41-51-02C FOR DET	NP		001
-010C	D2549030608061		. . ATTACHMENT-LAVATORY PRE VSB A2-254-25-130 used on 001C, 001D, 001E, 001F, 001J, 001N, 001P, 001Q, 001R SEE 25-41-51-02C FOR DET	NP		001
-010D	D2549010610261		. . ATTACHMENT-LAVATORY used on 001G SEE 25-41-51-02C FOR DET	NP		001
-010E	D2549030605261		. . ATTACHMENT-LAVATORY used on 001H SEE 25-41-51-02B FOR DET	NP		001
-010F	D2549010613861		. . ATTACHMENT-LAVATORY PRE VSB A2-254-25-130 used on 001K, 001L, 001M, 001S, 001U SEE 25-41-51-02C FOR DET	NP		001
-010G	R22540119605261		. . ATTACHMENT-LAVATORY POST VSB A2-254-25-130 used on 001W, 001X SEE 25-41-51-02C FOR DET	NP		001

- ITEM NOT ILLUSTRATED

FIG. ITEM	PART NUMBER	AIRLINE STOCK NUMBER	NOMENCLATURE 1234567		EFF CODE	UNITS PER ASSY
-010H	R22540119606261		. . ATTACHMENT-LAVATORY POST VSB A2-254-25-130 used on 001Y SEE 25-41-51-02C FOR DET	NP		001
020A	D2549020602663		. . PANEL-CEILING used on 001A, 001V SEE 25-41-51-040 FOR DET	NP		001
-020B	D2549030402263		. . PANEL-CEILING used on 001B, 001F, 001T SEE 25-41-51-04A FOR DET	NP		001
-020C	D2549030401463		. . PANEL-CEILING PRE VSB A2-254-25-130 used on 001C, 001D, 001E, 001H, 001J, 001K, 001L, 001M, 001N, 001P, 001Q, 001R, 001S, 001U SEE 25-41-51-040 FOR DET	NP		001
-020D	D2549010611463		. . PANEL-CEILING used on 001G SEE 25-41-51-04A FOR DET	NP		001
-020E	R22540119604663		. . PANEL-CEILING POST VSB A2-254-25-130 used on 001W, 001X, 001Y SEE 25-41-51-040 FOR DET	NP		001
030A	D2549030404664		. . WALL-REAR used on 001A, 001V SEE 25-41-51-05H FOR DET	NP		001
-030B	D2549020809464		. . WALL-REAR used on 001B, 001T SEE 25-41-51-05G FOR DET	NP		001

- ITEM NOT ILLUSTRATED

FIG. ITEM	PART NUMBER	AIRLINE STOCK NUMBER	NOMENCLATURE 1234567		EFF CODE	UNITS PER ASSY
-030C	D2549030603264		. . WALL-REAR PRE VSB A2-254-25-130 used on 001C, 001P SEE 25-41-51-05G FOR DET	NP		001
-030D	D2549020805464		. . WALL-REAR PRE VSB A2-254-25-130 used on 001D, 001E, 001H, 001J, 001K, 001L, 001M, 001N, 001Q, 001R, 001S, 001U SEE 25-41-51-05H FOR DET	NP		001
-030E	D2549030407264		. . WALL-REAR used on 001F SEE 25-41-51-05G FOR DET	NP		001
-030F	D2549010611464		. . WALL-REAR used on 001G SEE 25-41-51-05H FOR DET	NP		001
-030G	R22540119605464		. . WALL-REAR POST VSB A2-254-25-130 used on 001W SEE 25-41-51-05G FOR DET	NP		001
-030H	D2549010613264		. . WALL-REAR POST VSB A2-254-25-130 used on 001X, 001Y SEE 25-41-51-05H FOR DET	NP		001
040A	D2549030403465		. . WALL-SIDE used on 001A, 001V SEE 25-41-51-06Y FOR DET	NP		001
-040B	D2549020809465		. . WALL-SIDE PRE VSB A2-254-25-054 used on 001B, 001F SEE 25-41-51-06Y FOR DET	NP		001

- ITEM NOT ILLUSTRATED

FIG. ITEM	PART NUMBER	AIRLINE STOCK NUMBER	NOMENCLATURE 1234567		EFF CODE	UNITS PER ASSY
-040C	D2549020808665		. . WALL-SIDE PRE VSB A2-254-25-042 used on 001C, 001E, 001M SEE 25-41-51-480 FOR DET	NP		001
-040D	D2549020805865		. . WALL-SIDE PRE VSB A2-254-25-042 used on 001D SEE 25-41-51-480 FOR DET	NP		001
-040E	D2549010611465		. . WALL-SIDE used on 001G SEE 25-41-51-48B FOR DET	NP		001
-040F	D2549010611065		. . WALL-SIDE used on 001H SEE 25-41-51-06Z FOR DET	NP		001
-040G	D2549030613665		. . WALL-SIDE used on 001J, 001N SEE 25-41-51-06Y FOR DET	NP		001
-040H	D2549020813665		. . WALL-SIDE used on 001K SEE 25-41-51-48C FOR DET	NP		001
-040J	D2549030403065		. . WALL-SIDE PRE VSB A2-254-25-045 used on 001L SEE 25-41-51-06Z FOR DET	NP		001
-040K	R22540119600865		. . WALL-SIDE PRE VSB A2-254-25-130 POST VSB A2-254-25-042 used on 001P, 001Q, 001S SEE 25-41-51-480 FOR DET	NP		001
-040L	R22540115200865		. . WALL-SIDE POST VSB A2-254-25-042 used on 001R SEE 25-41-51-480 FOR DET	NP		001

- ITEM NOT ILLUSTRATED

FIG. ITEM	PART NUMBER	AIRLINE STOCK NUMBER	NOMENCLATURE 1234567		EFF CODE	UNITS PER ASSY
-040M	R22540116800865		. . WALL-SIDE POST VSB A2-254-25-054 used on 001T SEE 25-41-51-06Y FOR DET	NP		001
-040N	R22540119900865		. . WALL-SIDE POST VSB A2-254-25-045 used on 001U SEE 25-41-51-06Z FOR DET	NP		001
-040P	R22540119605465		. . WALL-SIDE POST VSB A2-254-25-130 used on 001W, 001X, 001Y SEE 25-41-51-480 FOR DET	NP		001
050A	D2549030404666		. . HOUSING used on 001A, 001V SEE 25-41-51-07U FOR DET	NP		001
-050B	D2549030402266		. . HOUSING used on 001B, 001T SEE 25-41-51-07R FOR DET	NP		001
-050C	D2549020811866		. . HOUSING PRE VSB A2-254-25-130 used on 001C, 001P SEE 25-41-51-07S FOR DET	NP		001
-050D	D2549020805866		. . HOUSING PRE VSB A2-254-25-130 used on 001D, 001E, 001M, 001Q, 001R, 001S SEE 25-41-51-07T FOR DET	NP		001
-050E	D2549030407266		. . HOUSING used on 001F SEE 25-41-51-07U FOR DET	NP		001
-050F	D2549010611466		. . HOUSING used on 001G SEE 25-41-51-07T FOR DET	NP		001

- ITEM NOT ILLUSTRATED

FIG. ITEM	PART NUMBER	AIRLINE STOCK NUMBER	NOMENCLATURE 1234567		EFF CODE	UNITS PER ASSY
-050G	D2549020814466		. . HOUSING used on 001H SEE 25-41-51-07T FOR DET	NP		001
-050H	D2549020805466		. . HOUSING used on 001J, 001N SEE 25-41-51-07T FOR DET	NP		001
-050J	D2549010400466		. . HOUSING used on 001K SEE 25-41-51-07T FOR DET	NP		001
-050K	D2549030406466		. . HOUSING used on 001L, 001U SEE 25-41-51-07T FOR DET	NP		001
-050L	R22540119605666		. . HOUSING POST VSB A2-254-25-130 used on 001W SEE 25-41-51-07S FOR DET	NP		001
-050M	R22540119606066		. . HOUSING POST VSB A2-254-25-130 used on 001X, 001Y SEE 25-41-51-07T FOR DET	NP		001
060A	D2549010500069		. . DOOR INSTL used on 001A, 001B, 001C, 001D, 001E, 001F, 001G, 001H, 001J, 001K, 001L, 001M, 001N, 001P, 001Q, 001R, 001S, 001T, 001U, 001V, 001W, 001X, 001Y SEE 25-41-51-100 FOR DET	NP		001
070A	A225400276-570		. . DOOR ASSY-SINGLE used on 001A, 001V SEE 25-41-51-11E FOR DET			001
-070B	A225400276-932		. . DOOR ASSY-SINGLE used on 001B, 001F, 001T SEE 25-41-51-11D FOR DET			001

- ITEM NOT ILLUSTRATED

FIG. ITEM	PART NUMBER	AIRLINE STOCK NUMBER	NOMENCLATURE 1234567	EFF CODE	UNITS PER ASSY
-070C	A225400276-952		. . DOOR ASSY-SINGLE PRE VSB A2-254-25-130 used on 001C, 001E, 001M, 001P, 001Q, 001S SEE 25-41-51-11G FOR DET		001
-070D	A225400276-946		. . DOOR ASSY-SINGLE used on 001D, 001R SEE 25-41-51-11G FOR DET		001
-070E	A225400278-808		. . DOOR ASSY-SINGLE used on 001G SEE 25-41-51-11H FOR DET		001
-070F	A225400276-596		. . DOOR ASSY-SINGLE used on 001H SEE 25-41-51-11G FOR DET		001
-070G	A225400278-524		. . DOOR ASSY-SINGLE used on 001J, 001N SEE 25-41-51-11K FOR DET		001
-070H	A225400276-942		. . DOOR ASSY-SINGLE used on 001K SEE 25-41-51-11F FOR DET		001
-070J	A225400276-960		. . DOOR ASSY-SINGLE used on 001L, 001U SEE 25-41-51-11J FOR DET		001
-070K	A225400263-990		. . DOOR ASSY-SINGLE POST VSB A2-254-25-130 used on 001W, 001X, 001Y SEE 25-41-51-11G FOR DET		001
080A	D2549030611271		. . TOILET UNIT AND TOILET SHROUD used on 001A, 001V SEE 25-41-51-12E FOR DET	NP	001

- ITEM NOT ILLUSTRATED

FIG. ITEM	PART NUMBER	AIRLINE STOCK NUMBER	NOMENCLATURE 1234567	EFF CODE	UNITS PER ASSY
-080B	D2549020512471		. . TOILET UNIT AND TOILET SHROUD NP used on 001B, 001F, 001T SEE 25-41-51-12E FOR DET		001
-080C	D2549020811871		. . TOILET UNIT AND TOILET SHROUD NP PRE VSB A2-254-25-130 used on 001C, 001E, 001L, 001M, 001P, 001Q, 001S, 001U SEE 25-41-51-12G FOR DET		001
-080D	D2549010607071		. . TOILET UNIT AND TOILET SHROUD NP used on 001D, 001G, 001J, 001N, 001R SEE 25-41-51-12D FOR DET		001
-080E	D2549020512271		. . TOILET UNIT AND TOILET SHROUD NP used on 001H SEE 25-41-51-12D FOR DET		001
-080F	D2549020514671		. . TOILET UNIT AND TOILET SHROUD NP used on 001K SEE 25-41-51-12E FOR DET		001
-080G	R22540119605871		. . TOILET UNIT AND TOILET SHROUD NP POST VSB A2-254-25-130 used on 001W, 001X, 001Y SEE 25-41-51-12G FOR DET		001
090A	D2549030405272		. . PAN-FLOOR NP used on 001A, 001V SEE 25-41-51-13J FOR DET		001
-090B	D2549030402272		. . PAN-FLOOR NP used on 001B, 001F, 001T SEE 25-41-51-13J FOR DET		001

- ITEM NOT ILLUSTRATED

FIG. ITEM	PART NUMBER	AIRLINE STOCK NUMBER	NOMENCLATURE 1234567		EFF CODE	UNITS PER ASSY
-090C	D2549020806072		. . PAN-FLOOR PRE VSB A2-254-25-130 used on 001C, 001D, 001E, 001M, 001P, 001Q, 001R, 001S SEE 25-41-51-13J FOR DET	NP		001
-090D	D2549010611472		. . PAN-FLOOR used on 001G SEE 25-41-51-13L FOR DET	NP		001
-090E	D2549020808872		. . PAN-FLOOR used on 001H SEE 25-41-51-13J FOR DET	NP		001
-090F	D2549020805472		. . PAN-FLOOR used on 001J, 001N SEE 25-41-51-13K FOR DET	NP		001
-090G	D2549020813672		. . PAN-FLOOR used on 001K SEE 25-41-51-13L FOR DET	NP		001
-090H	D2549030401672		. . PAN-FLOOR used on 001L, 001U SEE 25-41-51-13L FOR DET	NP		001
-090J	R22540119605672		. . PAN-FLOOR POST VSB A2-254-25-130 used on 001W, 001X, 001Y SEE 25-41-51-13J FOR DET	NP		001
100A	D2549020613673		. . LIGHT-DOOR used on 001A, 001V SEE 25-41-51-140 FOR DET	NP		001
-100B	D2549030508673		. . LIGHT-DOOR used on 001B, 001F, 001T SEE 25-41-51-14A FOR DET	NP		001

- ITEM NOT ILLUSTRATED

FIG. ITEM	PART NUMBER	AIRLINE STOCK NUMBER	NOMENCLATURE 1234567		EFF CODE	UNITS PER ASSY
-100C	D2549010512673		. . LIGHT-DOOR PRE VSB A2-254-25-130 used on 001C, 001D, 001E, 001H, 001J, 001K, 001L, 001M, 001N, 001P, 001Q, 001R, 001S, 001U SEE 25-41-51-140 FOR DET	NP		001
-100D	D2549010514073		. . LIGHT-DOOR used on 001G SEE 25-41-51-14A FOR DET	NP		001
-100E	R22540119604673		. . LIGHT-DOOR POST VSB A2-254-25-130 used on 001W, 001X, 001Y SEE 25-41-51-14C FOR DET	NP		001
110A	D2549020613674		. . WASHBASIN UNIT used on 001A, 001V SEE 25-41-51-15F FOR DET	NP		001
-110B	D2549030600874		. . WASHBASIN UNIT used on 001B, 001F, 001T SEE 25-41-51-15G FOR DET	NP		001
-110C	D2549020811874		. . WASHBASIN UNIT PRE VSB A2-254-25-130 used on 001C, 001E, 001P, 001Q SEE 25-41-51-15H FOR DET	NP		001
-110D	D2549020805874		. . WASHBASIN UNIT used on 001D, 001R SEE 25-41-51-15H FOR DET	NP		001
-110E	D2549010611474		. . WASHBASIN UNIT used on 001G SEE 25-41-51-15K FOR DET	NP		001
-110F	D2549020700674		. . WASHBASIN UNIT used on 001H SEE 25-41-51-15G FOR DET	NP		001

- ITEM NOT ILLUSTRATED

FIG. ITEM	PART NUMBER	AIRLINE STOCK NUMBER	NOMENCLATURE 1234567		EFF CODE	UNITS PER ASSY
-110G	D2549010603274		. . WASHBASIN UNIT used on 001J, 001N SEE 25-41-51-15F FOR DET	NP		001
-110H	D2549030514674		. . WASHBASIN UNIT used on 001K SEE 25-41-51-15G FOR DET	NP		001
-110J	D2549020409274		. . WASHBASIN UNIT PRE VSB A2-254-25-130 used on 001M, 001S SEE 25-41-51-15K FOR DET	NP		001
-110K	D2549030407474		. . WASHBASIN UNIT used on 001L, 001U SEE 25-41-51-15G FOR DET	NP		001
-110L	R22540119605874		. . WASHBASIN UNIT POST VSB A2-254-25-130 used on 001W, 001X SEE 25-41-51-15H FOR DET	NP		001
-110M	R22540119606274		. . WASHBASIN UNIT POST VSB A2-254-25-130 used on 001Y SEE 25-41-51-15K FOR DET	NP		001
120A	D2549030505475		. . DOOR ASSY-WASHBASIN UNIT used on 001A, 001V SEE 25-41-51-16B FOR DET	NP		001
-120B	D2549030507275		. . DOOR ASSY-WASHBASIN UNIT used on 001B, 001F, 001T SEE 25-41-51-16C FOR DET	NP		001

- ITEM NOT ILLUSTRATED

FIG. ITEM	PART NUMBER	AIRLINE STOCK NUMBER	NOMENCLATURE 1234567		EFF CODE	UNITS PER ASSY
-120C	D2549020607075		. . DOOR ASSY-WASHBASIN UNIT PRE VSB A2-254-25-130 used on 001C, 001D, 001E, 001G, 001J, 001N, 001P, 001Q, 001R SEE 25-41-51-16B FOR DET	NP		001
-120D	D2549010603675		. . DOOR ASSY-WASHBASIN UNIT used on 001H SEE 25-41-51-16C FOR DET	NP		001
-120E	D2549020607675		. . DOOR ASSY-WASHBASIN UNIT used on 001K SEE 25-41-51-16C FOR DET	NP		001
-120F	D2549030606075		. . DOOR ASSY-WASHBASIN UNIT PRE VSB A2-254-25-130 used on 001L, 001M, 001S, 001U SEE 25-41-51-16E FOR DET	NP		001
-120G	R22540119605075		. . DOOR ASSY-WASHBASIN UNIT POST VSB A2-254-25-130 used on 001W, 001X SEE 25-41-51-16B FOR DET	NP		001
-120H	R22540119606275		. . DOOR ASSY-WASHBASIN UNIT POST VSB A2-254-25-130 used on 001Y SEE 25-41-51-16E FOR DET	NP		001
130A	D2549020506276		. . PANEL ASSY-WASHBASIN UNIT used on 001A, 001V SEE 25-41-51-17C FOR DET	NP		001

- ITEM NOT ILLUSTRATED

FIG. ITEM	PART NUMBER	AIRLINE STOCK NUMBER	NOMENCLATURE 1234567		EFF CODE	UNITS PER ASSY
-130B	D2549030507276		. . PANEL ASSY-WASHBASIN UNIT used on 001B, 001F, 001T SEE 25-41-51-17D FOR DET	NP		001
-130C	D2549030504876		. . PANEL ASSY-WASHBASIN UNIT PRE VSB A2-254-25-130 used on 001C, 001D, 001E, 001G, 001L, 001M, 001P, 001Q, 001R, 001S, 001U SEE 25-41-51-17C FOR DET	NP		001
-130D	D2549010603676		. . PANEL ASSY-WASHBASIN UNIT used on 001H SEE 25-41-51-17D FOR DET	NP		001
-130E	D2549030511076		. . PANEL ASSY-WASHBASIN UNIT used on 001J, 001N SEE 25-41-51-17D FOR DET	NP		001
-130F	D2549020607676		. . PANEL ASSY-WASHBASIN UNIT used on 001K SEE 25-41-51-17C FOR DET	NP		001
-130G	R22540119604676		. . PANEL ASSY-WASHBASIN UNIT POST VSB A2-254-25-130 used on 001W, 001X, 001Y SEE 25-41-51-17C FOR DET	NP		001

- ITEM NOT ILLUSTRATED

FIG. ITEM	PART NUMBER	AIRLINE STOCK NUMBER	NOMENCLATURE 1234567		EFF CODE	UNITS PER ASSY
140A	D2549010611677		. . BIN-WASTE,CHUTE-WASTE AND EXTINGUISHER-FIRE used on 001A, 001B, 001C, 001D, 001E, 001F, 001G, 001H, 001J, 001K, 001L, 001M, 001N, 001P, 001Q, 001R, 001S, 001T, 001U, 001V, 001W, 001X, 001Y SEE 25-41-51-180 FOR DET	NP		001
150A	D2549020605678		. . CABINET-SERVICE used on 001A, 001V SEE 25-41-51-19E FOR DET	NP		001
-150B	D2549030507278		. . CABINET-SERVICE PRE VSB A2-254-25-054 used on 001B, 001F SEE 25-41-51-19F FOR DET	NP		001
-150C	D2549030504878		. . CABINET-SERVICE PRE VSB A2-254-25-042 PRE VSB A2-254-25-045 used on 001C, 001D, 001E, 001H, 001J, 001K, 001L, 001M, 001N SEE 25-41-51-19E FOR DET	NP		001
-150D	D2549010514078		. . CABINET-SERVICE used on 001G SEE 25-41-51-19E FOR DET	NP		001
-150E	R22540114200078		. . CABINET-SERVICE PRE VSB A2-254-25-130 POST VSB A2-254-25-042 used on 001P, 001Q, 001R, 001S SEE 25-41-51-19E FOR DET	NP		001
-150F	R22540116800478		. . CABINET-SERVICE POST VSB A2-254-25-054 used on 001T SEE 25-41-51-19F FOR DET	NP		001

- ITEM NOT ILLUSTRATED

FIG. ITEM	PART NUMBER	AIRLINE STOCK NUMBER	NOMENCLATURE 1234567		EFF CODE	UNITS PER ASSY
-150G	R22540119900278		. . CABINET-SERVICE POST VSB A2-254-25-045 used on 001U SEE 25-41-51-19E FOR DET	NP		001
-150H	R22540119604678		. . CABINET-SERVICE POST VSB A2-254-25-130 used on 001W, 001X, 001Y SEE 25-41-51-19E FOR DET	NP		001
160A	D2549020613679		. . TABLE-NURSING used on 001A, 001V SEE 25-41-51-20A FOR DET	NP		001
-160B	D2549030508679		. . TABLE-NURSING used on 001B, 001F, 001T SEE 25-41-51-20A FOR DET	NP		001
-160C	D2549010512679		. . TABLE-NURSING PRE VSB A2-254-25-130 used on 001C, 001D, 001E, 001M, 001P, 001Q, 001R, 001S SEE 25-41-51-20A FOR DET	NP		001
-160D	D2549010514079		. . TABLE-NURSING used on 001G SEE 25-41-51-20A FOR DET	NP		001
-160E	D2549010510679		. . TABLE-NURSING used on 001H, 001J, 001K, 001L, 001N, 001U SEE 25-41-51-20A FOR DET	NP		001
-160F	R22540119604679		. . TABLE-NURSING POST VSB A2-254-25-130 used on 001W, 001X, 001Y SEE 25-41-51-20A FOR DET	NP		001
170A	D2549020801080		. . VENTILATION SYSTEM used on 001A, 001V SEE 25-41-51-21B FOR DET	NP		001

- ITEM NOT ILLUSTRATED

FIG. ITEM	PART NUMBER	AIRLINE STOCK NUMBER	NOMENCLATURE 1234567		EFF CODE	UNITS PER ASSY
-170B	D2549020809480		. . VENTILATION SYSTEM used on 001B, 001F, 001T SEE 25-41-51-21B FOR DET	NP		001
-170C	D2549020802680		. . VENTILATION SYSTEM PRE VSB A2-254-25-130 used on 001C, 001D, 001E, 001H, 001J, 001K, 001L, 001M, 001N, 001P, 001Q, 001R, 001S, 001U SEE 25-41-51-21B FOR DET	NP		001
-170D	D2549010610280		. . VENTILATION SYSTEM used on 001G SEE 25-41-51-21B FOR DET	NP		001
-170E	R22540119605280		. . VENTILATION SYSTEM POST VSB A2-254-25-130 used on 001W, 001X, 001Y SEE 25-41-51-21B FOR DET	NP		001
180A	D2549030402081		. . WATER SYSTEM-POTABLE used on 001A, 001V SEE 25-41-51-22G FOR DET	NP		001
-180B	D2549010606081		. . WATER SYSTEM-POTABLE used on 001B, 001C, 001D, 001E, 001F, 001H, 001K, 001L, 001M, 001P, 001Q, 001R, 001S, 001T, 001U SEE 25-41-51-22D FOR DET	NP		001
-180C	D2549030607481		. . WATER SYSTEM-POTABLE used on 001G SEE 25-41-51-22E FOR DET	NP		001
-180D	D2549020805481		. . WATER SYSTEM-POTABLE used on 001J, 001N SEE 25-41-51-22H FOR DET	NP		001

- ITEM NOT ILLUSTRATED

FIG. ITEM	PART NUMBER	AIRLINE STOCK NUMBER	NOMENCLATURE 1234567		EFF CODE	UNITS PER ASSY
-180E	R22540161900081		. . WATER SYSTEM-POTABLE used on 001W, 001X, 001Y SEE 25-41-51-22D FOR DET	NP		001
190A	D2549030402082		. . WATER SYSTEM-WASTE used on 001A, 001V SEE 25-41-51-23B FOR DET	NP		001
-190B	D2549010511082		. . WATER SYSTEM-WASTE used on 001B, 001C, 001D, 001E, 001F, 001H, 001M, 001P, 001Q, 001R, 001S, 001T, 001W, 001X, 001Y SEE 25-41-51-23B FOR DET	NP		001
-190C	D2549010610282		. . WATER SYSTEM-WASTE used on 001G SEE 25-41-51-23B FOR DET	NP		001
-190D	D2549030405082		. . WATER SYSTEM-WASTE used on 001J, 001N SEE 25-41-51-23B FOR DET	NP		001
-190E	D2549020800882		. . WATER SYSTEM-WASTE used on 001K, 001L, 001U SEE 25-41-51-23D FOR DET	NP		001
200A	D2549030404683		. . ELECTRICAL SYSTEM used on 001A, 001V SEE 25-41-51-26P FOR DET	NP		001
-200B	D2549020513083		. . ELECTRICAL SYSTEM used on 001B, 001D, 001F, 001G, 001H, 001K, 001R, 001T SEE 25-41-51-26M FOR DET	NP		001
-200C	D2549020810283		. . ELECTRICAL SYSTEM PRE VSB A2-254-25-130 used on 001C, 001E, 001L, 001M, 001P, 001Q, 001S, 001U SEE 25-41-51-26P FOR DET	NP		001

- ITEM NOT ILLUSTRATED

FIG. ITEM	PART NUMBER	AIRLINE STOCK NUMBER	NOMENCLATURE 1234567		EFF CODE	UNITS PER ASSY
-200D	D2549020510483		. . ELECTRICAL SYSTEM used on 001J SEE 25-41-51-26N FOR DET	NP		001
-200E	D2549030613783		. . ELECTRICAL SYSTEM used on 001N SEE 25-41-51-26N FOR DET	NP		001
-200F	R22540119605483		. . ELECTRICAL SYSTEM POST VSB A2-254-25-130 used on 001W, 001X, 001Y SEE 25-41-51-26P FOR DET	NP		001
210A	D9250000000085		. . ELECTRICAL SYSTEM- COCKPIT DOOR LOCKING used on 001B, 001C, 001D, 001P, 001R, 001T, 001W SEE 25-41-51-310 FOR DET	NP		001
-210B	D9250000000185		. . ELECTRICAL SYSTEM- COCKPIT DOOR LOCKING used on 001A, 001E, 001F, 001G, 001H, 001J, 001K, 001L, 001M, 001N, 001Q, 001S, 001U, 001V, 001X, 001Y SEE 25-41-51-31A FOR DET	NP		001

- ITEM NOT ILLUSTRATED

THIS PAGE IS INTENTIONALLY LEFT BLANK

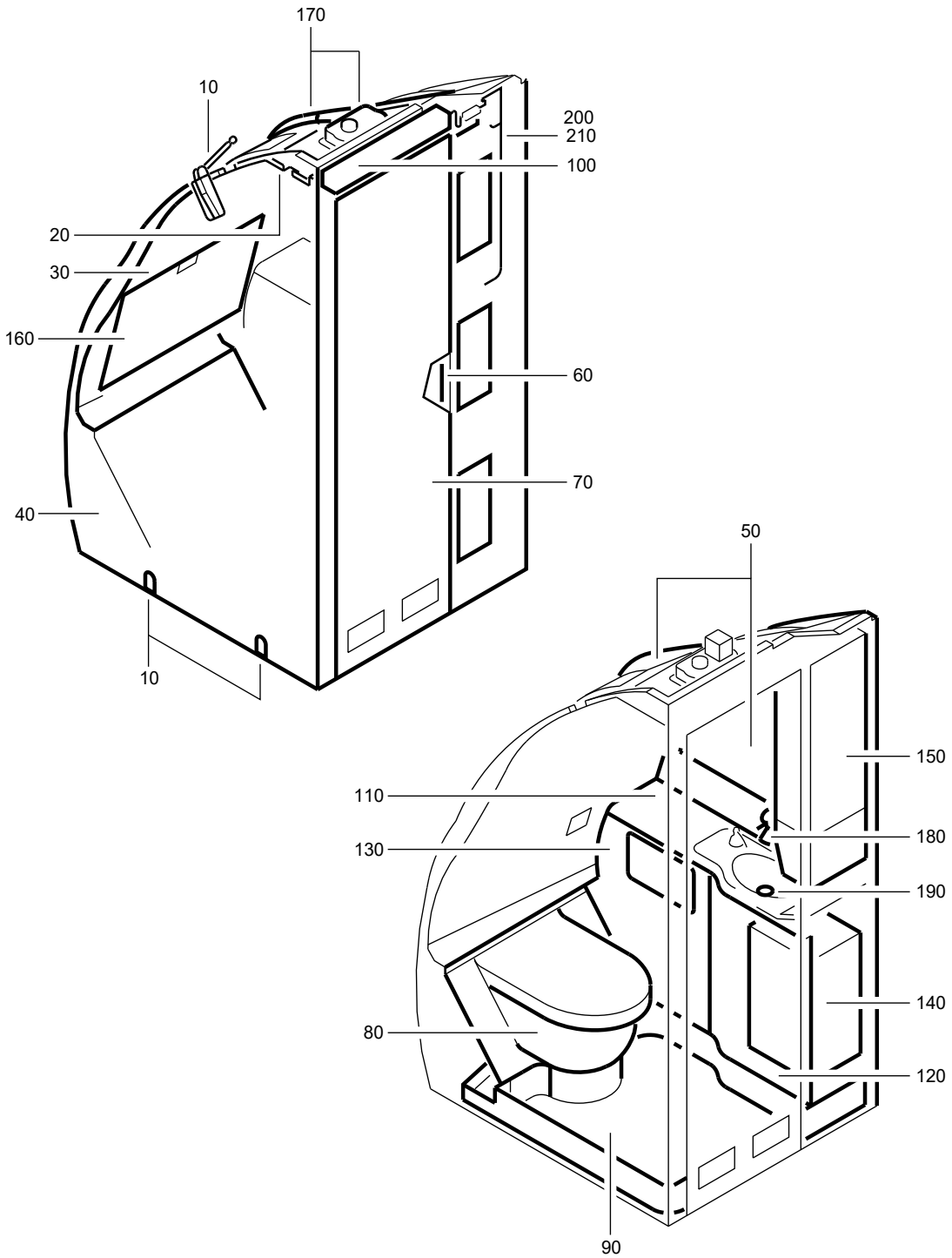

F_PL_254151_42_A_01_00

LAVATORY A ASSY
Figure 42A/EN254151SHEET42A01

FIG. ITEM	PART NUMBER	AIRLINE STOCK NUMBER	NOMENCLATURE 1234567	EFF CODE	UNITS PER ASSY
42A					
-001A	D2549020812000		. LAVATORY A ASSY SEE SIL 25-117 FOR DET		RF
-001B	D2549020805400		. LAVATORY A ASSY SEE SIL 25-117 FOR DET		RF
-001C	D2549020806200		. LAVATORY A ASSY SEE SIL 25-117 FOR DET		RF
-001D	D2549030401200		. LAVATORY A ASSY SEE SIL 25-117 FOR DET		RF
-001E	D2549030406400		. LAVATORY A ASSY PRE VSB A2-254-25-064 SEE SIL 25-117 FOR DET		RF
-001F	D2549010400400		. LAVATORY A ASSY SEE SIL 25-117 FOR DET		RF
-001G	D2549030407000		. LAVATORY A ASSY PRE VSB A2-254-25-035 SEE SIL 25-117 FOR DET		RF
-001H	D2549030406800		. LAVATORY A ASSY SEE SIL 25-117 FOR DET		RF
-001J	D2549020814200		. LAVATORY A ASSY SEE SIL 25-117 FOR DET		RF
-001K	D2549020807800		. LAVATORY A ASSY PRE VSB A2-254-25-020 SEE SIL 25-117 FOR DET		RF
-001L	D2549010613800		. LAVATORY A ASSY SEE SIL 25-117 FOR DET		RF
-001M	D2549020812200		. LAVATORY A ASSY PRE VSB A2-254-25-080 SEE SIL 25-117 FOR DET		RF

- ITEM NOT ILLUSTRATED

FIG. ITEM	PART NUMBER	AIRLINE STOCK NUMBER	NOMENCLATURE 1234567	EFF CODE	UNITS PER ASSY
-001N	D2549020814200		. LAVATORY A ASSY POST SB 25-1314 SEE SIL 25-117 FOR DET		RF
-001P	D2549020805400		. LAVATORY A ASSY SEE SIL 25-117 FOR DET		RF
-001Q	R225401643000		. LAVATORY A ASSY POST VSB A2-254-25-020 SEE SIL 25-117 FOR DET		RF
-001R	R225401611-006		. LAVATORY A ASSY POST VSB A2-254-25-035 SEE SIL 25-117 FOR DET		RF
-001S	R225401656-002		. LAVATORY A ASSY POST VSB A2-254-25-080 SEE SIL 25-117 FOR DET		RF
-001T	R225401648-002		. LAVATORY A ASSY POST VSB A2-254-25-064		RF
010A	D2549030608061		. . ATTACHMENT-LAVATORY NP used on 001A, 001B, 001D, 001E, 001F, 001G, 001H, 001J, 001K, 001M, 001N, 001P, 001Q, 001R, 001S, 001T SEE 25-41-51-02C FOR DET		001
-010B	D2549010613861		. . ATTACHMENT-LAVATORY NP used on 001L SEE 25-41-51-02C FOR DET		001
-010C	D2549030401061		. . ATTACHMENT-LAVATORY NP used on 001C SEE 25-41-51-02D FOR DET		001

- ITEM NOT ILLUSTRATED

FIG. ITEM	PART NUMBER	AIRLINE STOCK NUMBER	NOMENCLATURE 1234567	EFF CODE	UNITS PER ASSY
020A	D2549030401463		. . PANEL-CEILING NP used on 001A, 001B, 001C, 001D, 001E, 001F, 001G, 001H, 001J, 001K, 001L, 001M, 001N, 001P, 001Q, 001R, 001S, 001T SEE 25-41-51-040 FOR DET		001
030A	D2549030603264		. . WALL-REAR NP used on 001A, 001C, 001D SEE 25-41-51-05G FOR DET		001
-030B	D2549020805464		. . WALL-REAR NP used on 001B, 001F, 001G, 001J, 001L, 001P, 001R SEE 25-41-51-05H FOR DET		001
-030C	D2549030406464		. . WALL-REAR NP used on 001E, 001T SEE 25-41-51-05F FOR DET		001
-030D	D2549020807864		. . WALL-REAR NP used on 001K, 001Q SEE 25-41-51-05H FOR DET		001
-030E	D2549020812264		. . WALL-REAR NP used on 001H, 001M, 001N, 001S SEE 25-41-51-05H FOR DET		001
040A	D2549020812065		. . WALL-SIDE NP used on 001A SEE 25-41-51-48B FOR DET		001
-040B	D2549030613665		. . WALL-SIDE NP used on 001B, 001P SEE 25-41-51-06Y FOR DET		001
-040C	D2549010611065		. . WALL-SIDE NP used on 001C SEE 25-41-51-06Z FOR DET		001

- ITEM NOT ILLUSTRATED

FIG. ITEM	PART NUMBER	AIRLINE STOCK NUMBER	NOMENCLATURE 1234567	EFF CODE	UNITS PER ASSY
-040D	D2549030402865		. . WALL-SIDE NP used on 001D SEE 25-41-51-06Y FOR DET		001
-040E	D2549030404865		. . WALL-SIDE NP used on 001E, 001T SEE 25-41-51-480 FOR DET		001
-040F	D2549010612465		. . WALL-SIDE NP used on 001F SEE 25-41-51-48B FOR DET		001
-040G	D2549030401465		. . WALL-SIDE NP used on 001G, 001R SEE 25-41-51-06Z FOR DET		001
-040H	D2549030400665		. . WALL-SIDE NP used on 001H SEE 25-41-51-480 FOR DET		001
-040J	D2549020809865		. . WALL-SIDE NP used on 001J, 001N SEE 25-41-51-06R FOR DET		001
-040K	D2549020807665		. . WALL-SIDE NP PRE VSB A2-254-25-020 used on 001K SEE 25-41-51-06Z FOR DET		001
-040L	D2549010613865		. . WALL-SIDE NP used on 001L SEE 25-41-51-06Z FOR DET		001
-040M	D2549020810065		. . WALL-SIDE NP PRE VSB A2-254-25-080 used on 001M SEE 25-41-51-06Z FOR DET		001

- ITEM NOT ILLUSTRATED

FIG. ITEM	PART NUMBER	AIRLINE STOCK NUMBER	NOMENCLATURE 1234567	EFF CODE	UNITS PER ASSY
-040N	R22540164300065		. . WALL-SIDE NP POST VSB A2-254-25-020 used on 001Q SEE 25-41-51-06Z FOR DET		001
-040P	R22540164700065		. . WALL-SIDE NP POST VSB A2-254-25-080 used on 001S SEE 25-41-51-06Z FOR DET		001
050A	D2549020812066		. . HOUSING NP used on 001A SEE 25-41-51-07Q FOR DET		001
-050B	D2549020805466		. . HOUSING NP used on 001B, 001P SEE 25-41-51-07T FOR DET		001
-050C	D2549020808866		. . HOUSING NP used on 001C SEE 25-41-51-07R FOR DET		001
-050D	D2549030401266		. . HOUSING NP used on 001D SEE 25-41-51-07T FOR DET		001
-050E	D2549030406466		. . HOUSING NP used on 001E, 001T SEE 25-41-51-07T FOR DET		001
-050F	D2549010400466		. . HOUSING NP used on 001F, 001K, 001Q SEE 25-41-51-07T FOR DET		001
-050G	D2549030407066		. . HOUSING NP used on 001G, 001R SEE 25-41-51-07T FOR DET		001
-050H	D2549030406866		. . HOUSING NP used on 001H SEE 25-41-51-07T FOR DET		001

- ITEM NOT ILLUSTRATED

FIG. ITEM	PART NUMBER	AIRLINE STOCK NUMBER	NOMENCLATURE 1234567		EFF CODE	UNITS PER ASSY
-050J	D2549020814266		. . HOUSING used on 001J, 001N SEE 25-41-51-07T FOR DET	NP		001
-050K	D2549020812266		. . HOUSING used on 001M, 001S SEE 25-41-51-07T FOR DET	NP		001
-050L	D2549010613666		. . HOUSING used on 001L SEE 25-41-51-49B FOR DET	NP		001
060A	D2549010500069		. . DOOR INSTL used on 001A, 001B, 001C, 001D, 001E, 001F, 001G, 001H, 001J, 001K, 001M, 001N, 001P, 001Q, 001R, 001S, 001T SEE 25-41-51-100 FOR DET	NP		001
-060B	D2549020401269		. . DOOR INSTL used on 001L SEE 25-41-51-10A FOR DET	NP		001
070A	A225400278-818		. . DOOR ASSY-SINGLE used on 001A SEE 25-41-51-11K FOR DET			001
-070B	A225400278-524		. . DOOR ASSY-SINGLE used on 001B, 001P SEE 25-41-51-11K FOR DET			001
-070C	A225400276-596		. . DOOR ASSY-SINGLE used on 001C SEE 25-41-51-11G FOR DET			001
-070D	A225400276-574		. . DOOR ASSY-SINGLE used on 001D SEE 25-41-51-11G FOR DET			001

- ITEM NOT ILLUSTRATED

FIG. ITEM	PART NUMBER	AIRLINE STOCK NUMBER	NOMENCLATURE 1234567	EFF CODE	UNITS PER ASSY
-070E	A225400278-514		. . DOOR ASSY-SINGLE used on 001E, 001T SEE 25-41-51-11H FOR DET		001
-070F	A225400276-540		. . DOOR ASSY-SINGLE used on 001F SEE 25-41-51-11L FOR DET		001
-070G	A225400276-960		. . DOOR ASSY-SINGLE used on 001G, 001R SEE 25-41-51-11J FOR DET		001
-070H	A225400278-800		. . DOOR ASSY-SINGLE used on 001H SEE 25-41-51-11H FOR DET		001
-070J	A225400278-806		. . DOOR ASSY-SINGLE used on 001J, 001N SEE 25-41-51-11H FOR DET		001
-070K	A225400276-942		. . DOOR ASSY-SINGLE used on 001K, 001Q SEE 25-41-51-11F FOR DET		001
-070L	A225400276-934		. . DOOR ASSY-SINGLE used on 001M, 001S SEE 25-41-51-11F FOR DET		001
-070M	A2254002768942		. . DOOR ASSY-SINGLE used on 001K, 001L, 001Q SEE 25-41-51-11F FOR DET		001
080A	D2549020514671		. . TOILET UNIT AND TOILET SHROUD NP used on 001A, 001K, 001L, 001Q SEE 25-41-51-12E FOR DET		001

- ITEM NOT ILLUSTRATED

FIG. ITEM	PART NUMBER	AIRLINE STOCK NUMBER	NOMENCLATURE 1234567		EFF CODE	UNITS PER ASSY
-080B	D2549010607071		. . TOILET UNIT AND TOILET SHROUD used on 001B, 001D, 001F, 001G, 001H, 001M, 001P, 001R, 001S SEE 25-41-51-12D FOR DET	NP		001
-080C	D2549020512271		. . TOILET UNIT AND TOILET SHROUD used on 001C SEE 25-41-51-12D FOR DET	NP		001
-080D	D2549030404871		. . TOILET UNIT AND TOILET SHROUD used on 001E, 001T SEE 25-41-51-12F FOR DET	NP		001
-080E	D2549020514871		. . TOILET UNIT AND TOILET SHROUD used on 001J, 001N SEE 25-41-51-12E FOR DET	NP		001
090A	D2549020812072		. . PAN-FLOOR used on 001A SEE 25-41-51-13K FOR DET	NP		001
-090B	D2549020805472		. . PAN-FLOOR used on 001B, 001P SEE 25-41-51-13K FOR DET	NP		001
-090C	D2549020808872		. . PAN-FLOOR used on 001C SEE 25-41-51-13J FOR DET	NP		001
-090D	D2549030401272		. . PAN-FLOOR used on 001D SEE 25-41-51-13K FOR DET	NP		001
-090E	D2549020807672		. . PAN-FLOOR used on 001E, 001K, 001Q, 001T SEE 25-41-51-13J FOR DET	NP		001

- ITEM NOT ILLUSTRATED

FIG. ITEM	PART NUMBER	AIRLINE STOCK NUMBER	NOMENCLATURE 1234567		EFF CODE	UNITS PER ASSY
-090F	D2549020804872		. . PAN-FLOOR used on 001F SEE 25-41-51-13K FOR DET	NP		001
-090G	D2549030401472		. . PAN-FLOOR used on 001G, 001R SEE 25-41-51-13J FOR DET	NP		001
-090H	D2549030400672		. . PAN-FLOOR used on 001H SEE 25-41-51-13K FOR DET	NP		001
-090J	D2549020814272		. . PAN-FLOOR used on 001J SEE 25-41-51-13J FOR DET	NP		001
-090K	D2549020810072		. . PAN-FLOOR used on 001M, 001S SEE 25-41-51-13J FOR DET	NP		001
-090L	D2549030602472		. . PAN-FLOOR used on 001N SEE 25-41-51-13T FOR DET	NP		001
-090M	D2549010514272		. . PAN-FLOOR used on 001L SEE 25-41-51-13T FOR DET	NP		001
100A	D2549010512673		. . LIGHT-DOOR used on 001A, 001B, 001C, 001D, 001E, 001F, 001G, 001H, 001J, 001K, 001L, 001M, 001N, 001P, 001Q, 001R, 001S, 001T SEE 25-41-51-140 FOR DET	NP		001
110A	D2549020706674		. . WASHBASIN UNIT used on 001A SEE 25-41-51-15D FOR DET	NP		001

- ITEM NOT ILLUSTRATED

FIG. ITEM	PART NUMBER	AIRLINE STOCK NUMBER	NOMENCLATURE 1234567		EFF CODE	UNITS PER ASSY
-110B	D2549010603274		. . WASHBASIN UNIT used on 001B, 001P SEE 25-41-51-15F FOR DET	NP		001
-110C	D2549020700674		. . WASHBASIN UNIT used on 001C, 001J, 001N SEE 25-41-51-15G FOR DET	NP		001
-110D	D2549030514674		. . WASHBASIN UNIT used on 001D, 001E, 001F, 001G, 001H, 001K, 001L, 001Q, 001R, 001T SEE 25-41-51-15G FOR DET	NP		001
-110E	D2549030509874		. . WASHBASIN UNIT used on 001M, 001S SEE 25-41-51-15G FOR DET	NP		001
120A	D2549020607675		. . DOOR ASSY-WASHBASIN UNIT used on 001A, 001K, 001L, 001Q SEE 25-41-51-16C FOR DET	NP		001
-120B	D2549020607075		. . DOOR ASSY-WASHBASIN UNIT used on 001B, 001D, 001F, 001G, 001H, 001P, 001R SEE 25-41-51-16B FOR DET	NP		001
-120C	D2549010603675		. . DOOR ASSY-WASHBASIN UNIT used on 001C SEE 25-41-51-16C FOR DET	NP		001
-120D	D2549030504675		. . DOOR ASSY-WASHBASIN UNIT used on 001E, 001T SEE 25-41-51-16B FOR DET	NP		001

- ITEM NOT ILLUSTRATED

FIG. ITEM	PART NUMBER	AIRLINE STOCK NUMBER	NOMENCLATURE 1234567		EFF CODE	UNITS PER ASSY
-120E	D2549030606075		. . DOOR ASSY-WASHBASIN UNIT used on 001J, 001M, 001N, 001S SEE 25-41-51-16E FOR DET	NP		001
130A	D2549020607676		. . PANEL ASSY-WASHBASIN UNIT used on 001A, 001K, 001L, 001Q SEE 25-41-51-17C FOR DET	NP		001
-130B	D2549030511076		. . PANEL ASSY-WASHBASIN UNIT used on 001B, 001P SEE 25-41-51-17D FOR DET	NP		001
-130C	D2549010603676		. . PANEL ASSY-WASHBASIN UNIT used on 001C SEE 25-41-51-17D FOR DET	NP		001
-130D	D2549030504876		. . PANEL ASSY-WASHBASIN UNIT used on 001D, 001F, 001G, 001H, 001J, 001M, 001N, 001R, 001S SEE 25-41-51-17C FOR DET	NP		001
-130E	D2549030504676		. . PANEL ASSY-WASHBASIN UNIT used on 001E, 001T SEE 25-41-51-17C FOR DET	NP		001
140A	D2549010611677		. . BIN-WASTE,CHUTE-WASTE AND EXTINGUISHER-FIRE used on 001A, 001B, 001C, 001D, 001E, 001F, 001G, 001H, 001J, 001K, 001L, 001M, 001N, 001P, 001Q, 001R, 001S, 001T SEE 25-41-51-180 FOR DET	NP		001

- ITEM NOT ILLUSTRATED

FIG. ITEM	PART NUMBER	AIRLINE STOCK NUMBER	NOMENCLATURE 1234567	EFF CODE	UNITS PER ASSY
150A	D2549030504078		. . CABINET-SERVICE NP used on 001A, 001E, 001F, 001H, 001T SEE 25-41-51-19E FOR DET		001
-150B	D2549030504878		. . CABINET-SERVICE NP PRE VSB A2-254-25-020 PRE VSB A2-254-25-035 PRE VSB A2-254-25-080 used on 001B, 001C, 001D, 001G, 001J, 001K, 001L, 001M, 001N, 001P SEE 25-41-51-19E FOR DET		001
-150C	R22540163900078		. . CABINET-SERVICE NP POST VSB A2-254-25-020 POST VSB A2-254-25-035 used on 001Q, 001R SEE 25-41-51-19E FOR DET		001
-150D	R22540114500278		. . CABINET-SERVICE NP POST VSB A2-254-25-080 used on 001S SEE 25-41-51-19E FOR DET		001
160A	D2549010510679		. . TABLE-NURSING NP used on 001A, 001B, 001C, 001F, 001G, 001H, 001J, 001L, 001M, 001N, 001P, 001R, 001S SEE 25-41-51-20A FOR DET		001
-160B	D2549010512679		. . TABLE-NURSING NP used on 001D, 001E, 001K, 001Q, 001T SEE 25-41-51-20A FOR DET		001

- ITEM NOT ILLUSTRATED

FIG. ITEM	PART NUMBER	AIRLINE STOCK NUMBER	NOMENCLATURE 1234567		EFF CODE	UNITS PER ASSY
170A	D2549020802680		. . VENTILATION SYSTEM used on 001A, 001B, 001C, 001D, 001E, 001F, 001G, 001H, 001J, 001K, 001L, 001M, 001N, 001P, 001Q, 001R, 001S, 001T SEE 25-41-51-21B FOR DET	NP		001
180A	D2549010606081		. . WATER SYSTEM-POTABLE PRE VSB A2-254-25-035 used on 001A, 001C, 001E, 001F, 001G, 001J, 001K, 001L, 001M, 001N, 001Q, 001S, 001T SEE 25-41-51-22D FOR DET	NP		001
-180B	D2549020805481		. . WATER SYSTEM-POTABLE used on 001B, 001P SEE 25-41-51-22H FOR DET	NP		001
-180C	D2549030402081		. . WATER SYSTEM-POTABLE used on 001D SEE 25-41-51-22G FOR DET	NP		001
-180D	D2549030608281		. . WATER SYSTEM-POTABLE used on 001H SEE 25-41-51-22G FOR DET	NP		001
-180E	R22540119900081		. . WATER SYSTEM-POTABLE POST VSB A2-254-25-035 used on 001R SEE 25-41-51-22D FOR DET	NP		001
190A	D2549010511082		. . WATER SYSTEM-WASTE PRE VSB A2-254-25-035 used on 001A, 001C, 001E, 001F, 001G, 001H, 001J, 001K, 001L, 001M, 001N, 001Q, 001S, 001T SEE 25-41-51-23B FOR DET	NP		001
-190B	D2549030405082		. . WATER SYSTEM-WASTE used on 001B, 001D, 001P SEE 25-41-51-23B FOR DET	NP		001

- ITEM NOT ILLUSTRATED

FIG. ITEM	PART NUMBER	AIRLINE STOCK NUMBER	NOMENCLATURE 1234567		EFF CODE	UNITS PER ASSY
-190C	R22540119900082		. . WATER SYSTEM-WASTE POST VSB A2-254-25-035 used on 001R SEE 25-41-51-23B FOR DET	NP		001
200A	D2549020513083		. . ELECTRICAL SYSTEM used on 001A, 001C, 001D, 001E, 001F, 001H, 001K, 001L, 001Q, 001T SEE 25-41-51-26M FOR DET	NP		001
-200B	D2549020510483		. . ELECTRICAL SYSTEM used on 001B SEE 25-41-51-26N FOR DET	NP		001
-200C	D2549020810283		. . ELECTRICAL SYSTEM used on 001G, 001R SEE 25-41-51-26P FOR DET	NP		001
-200D	D2549020514883		. . ELECTRICAL SYSTEM used on 001J, 001N SEE 25-41-51-26N FOR DET	NP		001
-200E	D2549020812283		. . ELECTRICAL SYSTEM used on 001M, 001S SEE 25-41-51-26M FOR DET	NP		001
-200F	D2549030613783		. . ELECTRICAL SYSTEM used on 001P SEE 25-41-51-26N FOR DET	NP		001
210A	D9250000000085		. . ELECTRICAL SYSTEM-COCKPIT DOOR LOCKING used on 001A, 001B, 001C, 001D, 001P SEE 25-41-51-310 FOR DET	NP		001

- ITEM NOT ILLUSTRATED

FIG. ITEM	PART NUMBER	AIRLINE STOCK NUMBER	NOMENCLATURE 1234567	EFF CODE	UNITS PER ASSY
-210B	D9250000000185		. . ELECTRICAL SYSTEM- COCKPIT DOOR LOCKING NP used on 001E, 001F, 001G, 001H, 001J, 001K, 001L, 001M, 001N, 001Q, 001R, 001S, 001T SEE 25-41-51-31A FOR DET		001

- ITEM NOT ILLUSTRATED

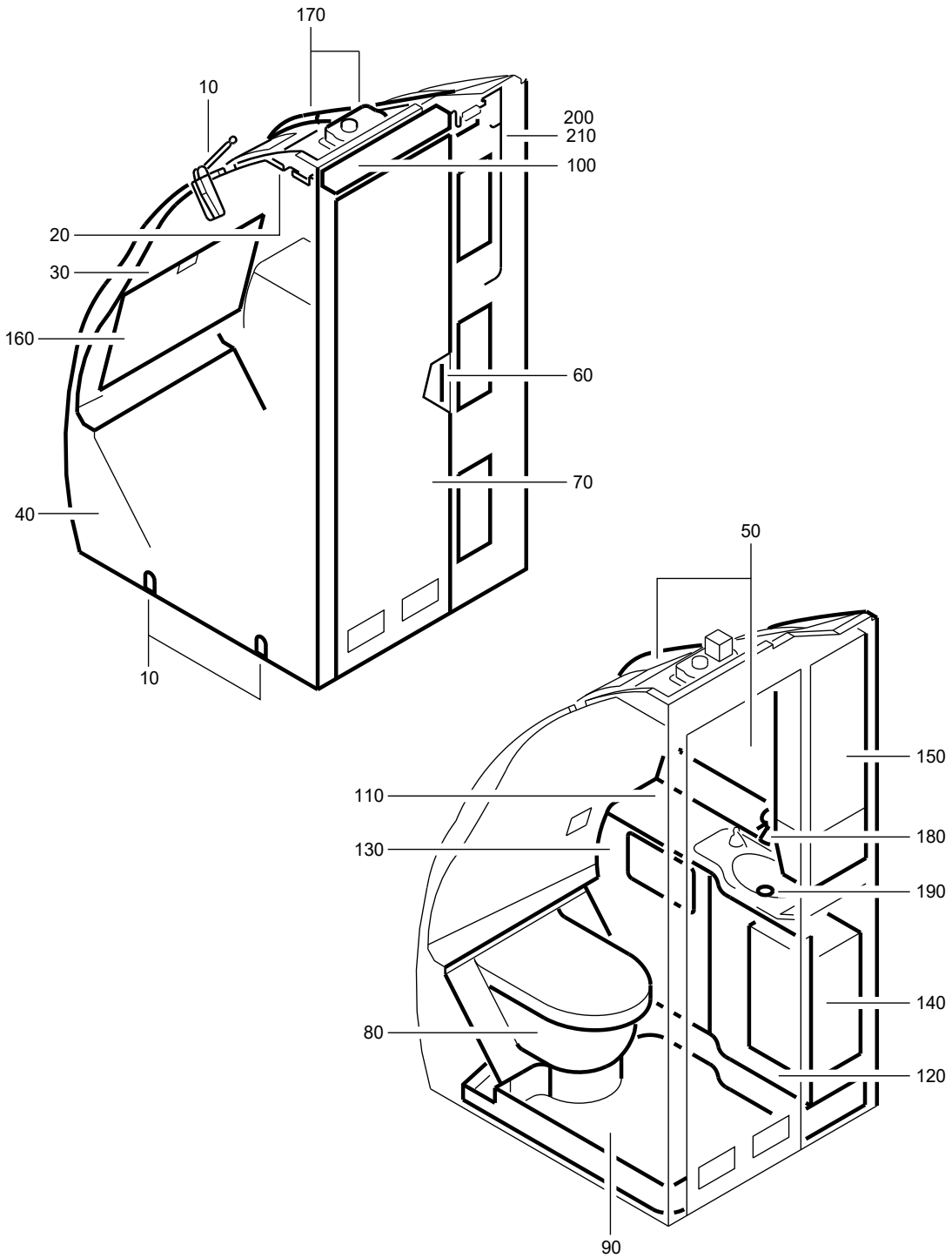

F_PL_254151_42_B_01_00

LAVATORY A ASSY
Figure 42B/EN254151SHEET42B01

FIG. ITEM	PART NUMBER	AIRLINE STOCK NUMBER	NOMENCLATURE 1234567	EFF CODE	UNITS PER ASSY
42B					
-001A	D2549020806600		. LAVATORY A ASSY PRE VSB A2-254-25-020 SEE SIL 25-117 FOR DET		RF
-001B	D2549020814400		. LAVATORY A ASSY SEE SIL 25-117 FOR DET		RF
-001C	D2549020812800		. LAVATORY A ASSY POST SB 25-1640 SEE SIL 25-117 FOR DET		RF
-001D	D2549040500200		. LAVATORY A ASSY SEE SIL 25-117 FOR DET		RF
-001E	D2549010400200		. LAVATORY A ASSY SEE SIL 25-117 FOR DET		RF
-001F	D2549020814000		. LAVATORY A ASSY SEE SIL 25-117 FOR DET		RF
-001G	D2549010613600		. LAVATORY A ASSY SEE SIL 25-117 FOR DET		RF
-001H	D2549030614000		. LAVATORY A ASSY SEE SIL 25-117 FOR DET		RF
-001J	D2549030405800		. LAVATORY A ASSY PRE VSB A2-254-25-080 SEE SIL 25-117 FOR DET		RF
-001K	D2549030407600		. LAVATORY A ASSY PRE VSB A2-254-25-045 SEE SIL 25-117 FOR DET		RF
-001L	D2549020813000		. LAVATORY A ASSY SEE SIL 25-117 FOR DET		RF
-001M	D2549010400600		. LAVATORY A ASSY SEE SIL 25-117 FOR DET		RF

- ITEM NOT ILLUSTRATED

FIG. ITEM	PART NUMBER	AIRLINE STOCK NUMBER	NOMENCLATURE 1234567	EFF CODE	UNITS PER ASSY
-001N	D2549020812800		. LAVATORY A ASSY POST SB 25-1400 SEE SIL 25-117 FOR DET		RF
-001P	R225401639000		. LAVATORY A ASSY POST VSB A2-254-25-020 SEE SIL 25-117 FOR DET		RF
-001Q	R225401656-000		. LAVATORY A ASSY POST VSB A2-254-25-080 SEE SIL 25-117 FOR DET		RF
-001R	R225401611-012		. LAVATORY A ASSY POST VSB A2-254-25-045 SEE SIL 25-117 FOR DET		RF
010A	D2549030608061		. . ATTACHMENT-LAVATORY NP used on 001A, 001B, 001C, 001D, 001E, 001F, 001J, 001K, 001L, 001P, 001Q, 001R SEE 25-41-51-02C FOR DET		001
-010B	D2549030514861		. . ATTACHMENT-LAVATORY NP used on 001H SEE 25-41-51-02A FOR DET		001
-010C	D2549010613861		. . ATTACHMENT-LAVATORY NP used on 001M SEE 25-41-51-02C FOR DET		001
-010D	D2549010613661		. . ATTACHMENT-LAVATORY NP used on 001G SEE 25-41-51-02D FOR DET		001
-010E	D2547160007261		. . ATTACHMENT-LAVATORY NP POST SB 25-1640 used on 001N SEE 25-41-51-02C FOR DET		001

- ITEM NOT ILLUSTRATED

FIG. ITEM	PART NUMBER	AIRLINE STOCK NUMBER	NOMENCLATURE 1234567		EFF CODE	UNITS PER ASSY
020A	D2549030401463		. . PANEL-CEILING used on 001A, 001B, 001C, 001D, 001E, 001F, 001G, 001H, 001J, 001K, 001L, 001M, 001N, 001P, 001Q, 001R SEE 25-41-51-040 FOR DET	NP		001
030A	D2549020805464		. . WALL-REAR used on 001A, 001B, 001C, 001D, 001H, 001K, 001L, 001M, 001N, 001P, 001R SEE 25-41-51-05H FOR DET	NP		001
-030B	D2549030603264		. . WALL-REAR used on 001E SEE 25-41-51-05G FOR DET	NP		001
-030C	D2549020807864		. . WALL-REAR used on 001G SEE 25-41-51-05H FOR DET	NP		001
-030D	D2549020812264		. . WALL-REAR used on 001F, 001J, 001Q SEE 25-41-51-05H FOR DET	NP		001
040A	D2549020809065		. . WALL-SIDE PRE VSB A2-254-25-020 used on 001A SEE 25-41-51-06Z FOR DET	NP		001
-040B	D2549010611065		. . WALL-SIDE used on 001B SEE 25-41-51-06Z FOR DET	NP		001
-040C	D2549020812865		. . WALL-SIDE used on 001C SEE 25-41-51-48B FOR DET	NP		001
-040D	D2549040500265		. . WALL-SIDE used on 001D SEE 25-41-51-48A FOR DET	NP		001

- ITEM NOT ILLUSTRATED

FIG. ITEM	PART NUMBER	AIRLINE STOCK NUMBER	NOMENCLATURE 1234567	EFF CODE	UNITS PER ASSY
-040E	D2549020811665		. . WALL-SIDE NP used on 001E, 001M SEE 25-41-51-48B FOR DET		001
-040F	D2549020804065		. . WALL-SIDE NP used on 001F SEE 25-41-51-06Z FOR DET		001
-040G	D2549010613665		. . WALL-SIDE NP used on 001G SEE 25-41-51-48K FOR DET		001
-040H	D2549030614065		. . WALL-SIDE NP used on 001H SEE 25-41-51-48B FOR DET		001
-040J	D2549020810065		. . WALL-SIDE NP PRE VSB A2-254-25-080 used on 001J SEE 25-41-51-06Z FOR DET		001
-040K	D2549030401465		. . WALL-SIDE NP PRE VSB A2-254-25-045 used on 001K SEE 25-41-51-06Z FOR DET		001
-040L	D2549020813065		. . WALL-SIDE NP used on 001L SEE 25-41-51-48B FOR DET		001
-040M	D2549020708465		. . WALL-SIDE NP POST SB 25-1640 used on 001N SEE 25-41-51-06Q FOR DET		001
-040N	R22540163900065		. . WALL-SIDE NP POST VSB A2-254-25-020 used on 001P SEE 25-41-51-06Z FOR DET		001

- ITEM NOT ILLUSTRATED

FIG. ITEM	PART NUMBER	AIRLINE STOCK NUMBER	NOMENCLATURE 1234567	EFF CODE	UNITS PER ASSY
-040P	R22540164700065		. . WALL-SIDE NP POST VSB A2-254-25-080 used on 001Q SEE 25-41-51-06Z FOR DET		001
-040Q	R22540161101265		. . WALL-SIDE NP POST VSB A2-254-25-045 used on 001R SEE 25-41-51-06Z FOR DET		001
050A	D2549010400466		. . HOUSING NP used on 001A, 001P SEE 25-41-51-07T FOR DET		001
-050B	D2549020814466		. . HOUSING NP used on 001B SEE 25-41-51-07T FOR DET		001
-050C	D2549020812866		. . HOUSING NP used on 001C SEE 25-41-51-07T FOR DET		001
-050D	D2549030407066		. . HOUSING NP used on 001F, 001K, 001R SEE 25-41-51-07T FOR DET		001
-050E	D2549010400266		. . HOUSING NP used on 001E, 001M SEE 25-41-51-07U FOR DET		001
-050F	D2549010613666		. . HOUSING NP used on 001G SEE 25-41-51-07U FOR DET		001
-050G	D2549030614066		. . HOUSING NP used on 001H SEE 25-41-51-07U FOR DET		001
-050H	D2549020812266		. . HOUSING NP used on 001J, 001Q SEE 25-41-51-07T FOR DET		001

- ITEM NOT ILLUSTRATED

FIG. ITEM	PART NUMBER	AIRLINE STOCK NUMBER	NOMENCLATURE 1234567	EFF CODE	UNITS PER ASSY
-050J	D2549020813066		. . HOUSING NP used on 001L SEE 25-41-51-07U FOR DET		001
-050K	D2549040500266		. . HOUSING NP used on 001D SEE 25-41-51-07U FOR DET		001
-050L	D2547160007266		. . HOUSING NP POST SB 25-1640 used on 001N SEE 25-41-51-07T FOR DET		001
060A	D2549010500069		. . DOOR INSTL NP used on 001A, 001B, 001C, 001D, 001E, 001F, 001H, 001J, 001K, 001L, 001M, 001N, 001P, 001Q, 001R SEE 25-41-51-100 FOR DET		001
-060B	D2549020401269		. . DOOR INSTL NP used on 001G SEE 25-41-51-10A FOR DET		001
070A	A225400278-810		. . DOOR ASSY-SINGLE used on 001A, 001P SEE 25-41-51-11K FOR DET		001
-070B	A225400276-596		. . DOOR ASSY-SINGLE used on 001B SEE 25-41-51-11G FOR DET		001
-070C	A225400278-822		. . DOOR ASSY-SINGLE used on 001C, 001N SEE 25-41-51-11K FOR DET		001
-070D	A225400276-960		. . DOOR ASSY-SINGLE used on 001D, 001K, 001R SEE 25-41-51-11J FOR DET		001

- ITEM NOT ILLUSTRATED

FIG. ITEM	PART NUMBER	AIRLINE STOCK NUMBER	NOMENCLATURE 1234567	EFF CODE	UNITS PER ASSY
-070E	A225400278-816		. . DOOR ASSY-SINGLE used on 001E SEE 25-41-51-11K FOR DET		001
-070F	A225400278-800		. . DOOR ASSY-SINGLE used on 001F SEE 25-41-51-11H FOR DET		001
-070G	A225400276-904		. . DOOR ASSY-SINGLE used on 001G SEE 25-41-51-11B FOR DET		001
-070H	A225400276-594		. . DOOR ASSY-SINGLE used on 001H SEE 25-41-51-11G FOR DET		001
-070J	A225400276-934		. . DOOR ASSY-SINGLE used on 001J, 001Q SEE 25-41-51-11F FOR DET		001
-070K	A225400278-516		. . DOOR ASSY-SINGLE used on 001L SEE 25-41-51-11K FOR DET		001
-070L	A225400278-900		. . DOOR ASSY-SINGLE used on 001M SEE 25-41-51-11K FOR DET		001
080A	D2549020514671		. . TOILET UNIT AND TOILET SHROUD NP used on 001A, 001P SEE 25-41-51-12E FOR DET		001
-080B	D2549020512271		. . TOILET UNIT AND TOILET SHROUD NP used on 001B SEE 25-41-51-12D FOR DET		001

- ITEM NOT ILLUSTRATED

FIG. ITEM	PART NUMBER	AIRLINE STOCK NUMBER	NOMENCLATURE 1234567		EFF CODE	UNITS PER ASSY
-080C	D2549010607071		. . TOILET UNIT AND TOILET SHROUD used on 001C, 001F, 001H, 001J, 001L, 001N, 001Q SEE 25-41-51-12D FOR DET	NP		001
-080D	D2549020811871		. . TOILET UNIT AND TOILET SHROUD used on 001D, 001G, 001K, 001R SEE 25-41-51-12G FOR DET	NP		001
-080E	D2549010613471		. . TOILET UNIT AND TOILET SHROUD used on 001E, 001M SEE 25-41-51-12D FOR DET	NP		001
090A	D2549020405472		. . PAN-FLOOR used on 001A, 001P SEE 25-41-51-13L FOR DET	NP		001
-090B	D2549020808872		. . PAN-FLOOR used on 001B SEE 25-41-51-13J FOR DET	NP		001
-090C	D2549020812872		. . PAN-FLOOR used on 001C, 001N SEE 25-41-51-13K FOR DET	NP		001
-090D	D2549040500272		. . PAN-FLOOR used on 001D SEE 25-41-51-13L FOR DET	NP		001
-090E	D2549020811672		. . PAN-FLOOR used on 001E, 001M SEE 25-41-51-13K FOR DET	NP		001
-090F	D2549030400672		. . PAN-FLOOR used on 001F SEE 25-41-51-13K FOR DET	NP		001

- ITEM NOT ILLUSTRATED

FIG. ITEM	PART NUMBER	AIRLINE STOCK NUMBER	NOMENCLATURE 1234567		EFF CODE	UNITS PER ASSY
-090G	D2549010613672		. . PAN-FLOOR used on 001G SEE 25-41-51-13Q FOR DET	NP		001
-090H	D2549030614072		. . PAN-FLOOR used on 001H SEE 25-41-51-13L FOR DET	NP		001
-090J	D2549020810072		. . PAN-FLOOR used on 001J, 001Q SEE 25-41-51-13J FOR DET	NP		001
-090K	D2549030401472		. . PAN-FLOOR used on 001K, 001R SEE 25-41-51-13J FOR DET	NP		001
-090L	D2549020813072		. . PAN-FLOOR used on 001L SEE 25-41-51-13L FOR DET	NP		001
100A	D2549010512673		. . LIGHT-DOOR used on 001A, 001B, 001C, 001E, 001F, 001G, 001H, 001J, 001K, 001L, 001M, 001P, 001Q, 001R SEE 25-41-51-140 FOR DET	NP		001
-100B	D2549040500273		. . LIGHT-DOOR used on 001D SEE 25-41-51-14A FOR DET	NP		001
-100C	D2547160007473		. . LIGHT-DOOR POST SB 25-1640 used on 001N SEE 25-41-51-14A FOR DET	NP		001
110A	D2549020704674		. . WASHBASIN UNIT used on 001A, 001P SEE 25-41-51-15G FOR DET	NP		001

- ITEM NOT ILLUSTRATED

FIG. ITEM	PART NUMBER	AIRLINE STOCK NUMBER	NOMENCLATURE 1234567		EFF CODE	UNITS PER ASSY
-110B	D2549020700674		. . WASHBASIN UNIT used on 001B SEE 25-41-51-15G FOR DET	NP		001
-110C	D2549020812874		. . WASHBASIN UNIT used on 001C, 001N SEE 25-41-51-15H FOR DET	NP		001
-110D	D2549020706274		. . WASHBASIN UNIT used on 001D, 001F SEE 25-41-51-15C FOR DET	NP		001
-110E	D2549020706674		. . WASHBASIN UNIT used on 001E, 001G, 001M SEE 25-41-51-15D FOR DET	NP		001
-110F	D2549030503874		. . WASHBASIN UNIT used on 001H SEE 25-41-51-15H FOR DET	NP		001
-110G	D2549030509874		. . WASHBASIN UNIT used on 001J, 001Q SEE 25-41-51-15G FOR DET	NP		001
-110H	D2549030514674		. . WASHBASIN UNIT used on 001K, 001R SEE 25-41-51-15G FOR DET	NP		001
-110J	D2549020808274		. . WASHBASIN UNIT used on 001L SEE 25-41-51-15H FOR DET	NP		001
120A	D2549020607675		. . DOOR ASSY-WASHBASIN UNIT used on 001A, 001P SEE 25-41-51-16C FOR DET	NP		001
-120B	D2549010603675		. . DOOR ASSY-WASHBASIN UNIT used on 001B, 001E, 001M SEE 25-41-51-16C FOR DET	NP		001

- ITEM NOT ILLUSTRATED

FIG. ITEM	PART NUMBER	AIRLINE STOCK NUMBER	NOMENCLATURE 1234567		EFF CODE	UNITS PER ASSY
-120C	D2549030606075		. . DOOR ASSY-WASHBASIN UNIT used on 001C, 001N SEE 25-41-51-16E FOR DET	NP		001
-120D	D2549020607075		. . DOOR ASSY-WASHBASIN UNIT used on 001D, 001F, 001G, 001H, 001J, 001K, 001L, 001Q, 001R SEE 25-41-51-16B FOR DET	NP		001
130A	D2549020607676		. . PANEL ASSY-WASHBASIN UNIT used on 001A, 001P SEE 25-41-51-17C FOR DET	NP		001
-130B	D2549010603676		. . PANEL ASSY-WASHBASIN UNIT used on 001B, 001E, 001M SEE 25-41-51-17D FOR DET	NP		001
-130C	D2549030504876		. . PANEL ASSY-WASHBASIN UNIT used on 001C, 001D, 001F, 001G, 001H, 001J, 001K, 001L, 001N, 001Q, 001R SEE 25-41-51-17C FOR DET	NP		001
140A	D2549010611677		. . BIN-WASTE,CHUTE-WASTE AND EXTINGUISHER-FIRE used on 001A, 001B, 001C, 001D, 001E, 001F, 001G, 001H, 001J, 001K, 001L, 001M, 001N, 001P, 001Q, 001R SEE 25-41-51-180 FOR DET	NP		001

- ITEM NOT ILLUSTRATED

FIG. ITEM	PART NUMBER	AIRLINE STOCK NUMBER	NOMENCLATURE 1234567		EFF CODE	UNITS PER ASSY
150A	D2549030504878		. . CABINET-SERVICE PRE VSB A2-254-25-020 PRE VSB A2-254-25-045 PRE VSB A2-254-25-080 used on 001A, 001B, 001D, 001E, 001G, 001H, 001J, 001K, 001L, 001M SEE 25-41-51-19E FOR DET	NP		001
-150B	D2549020812878		. . CABINET-SERVICE used on 001C, 001N SEE 25-41-51-19H FOR DET	NP		001
-150C	D2549030504078		. . CABINET-SERVICE used on 001F SEE 25-41-51-19E FOR DET	NP		001
-150D	R22540163900078		. . CABINET-SERVICE POST VSB A2-254-25-020 used on 001P SEE 25-41-51-19E FOR DET	NP		001
-150E	R22540114500278		. . CABINET-SERVICE POST VSB A2-254-25-080 used on 001Q SEE 25-41-51-19E FOR DET	NP		001
-150F	R22540119900278		. . CABINET-SERVICE POST VSB A2-254-25-045 used on 001R SEE 25-41-51-19E FOR DET	NP		001
160A	D2549010510679		. . TABLE-NURSING used on 001A, 001B, 001C, 001D, 001E, 001F, 001G, 001H, 001J, 001K, 001L, 001M, 001N, 001P, 001Q, 001R SEE 25-41-51-20A FOR DET	NP		001

- ITEM NOT ILLUSTRATED

FIG. ITEM	PART NUMBER	AIRLINE STOCK NUMBER	NOMENCLATURE 1234567		EFF CODE	UNITS PER ASSY
170A	D2549020802680		. . VENTILATION SYSTEM used on 001A, 001B, 001C, 001D, 001E, 001F, 001G, 001H, 001J, 001K, 001L, 001M, 001N, 001P, 001Q, 001R SEE 25-41-51-21B FOR DET	NP		001
180A	D2549010606081		. . WATER SYSTEM-POTABLE used on 001A, 001B, 001C, 001D, 001E, 001H, 001J, 001K, 001M, 001N, 001P, 001Q, 001R SEE 25-41-51-22D FOR DET	NP		001
-180B	D2549030402081		. . WATER SYSTEM-POTABLE used on 001F SEE 25-41-51-22G FOR DET	NP		001
-180C	D2549030607081		. . WATER SYSTEM-POTABLE used on 001L SEE 25-41-51-22D FOR DET	NP		001
-180D	D2549030410081		. . WATER SYSTEM-POTABLE used on 001G SEE 25-41-51-22G FOR DET	NP		001
190A	D2549030504882		. . WATER SYSTEM-WASTE used on 001A, 001C, 001N, 001P SEE 25-41-51-23B FOR DET	NP		001
-190B	D2549010511082		. . WATER SYSTEM-WASTE used on 001B, 001D, 001E, 001H, 001J, 001K, 001L, 001M, 001Q, 001R SEE 25-41-51-23B FOR DET	NP		001
-190C	D2549030405082		. . WATER SYSTEM-WASTE used on 001F, 001G SEE 25-41-51-23B FOR DET	NP		001

- ITEM NOT ILLUSTRATED

FIG. ITEM	PART NUMBER	AIRLINE STOCK NUMBER	NOMENCLATURE 1234567		EFF CODE	UNITS PER ASSY
200A	D2549020513083		. . ELECTRICAL SYSTEM used on 001A, 001B, 001C, 001E, 001F, 001H, 001L, 001M, 001P SEE 25-41-51-26M FOR DET	NP		001
-200B	D2549040500283		. . ELECTRICAL SYSTEM used on 001D SEE 25-41-51-26Q FOR DET	NP		001
-200C	D2549020812283		. . ELECTRICAL SYSTEM used on 001J, 001Q SEE 25-41-51-26M FOR DET	NP		001
-200D	D2549020810283		. . ELECTRICAL SYSTEM used on 001K, 001R SEE 25-41-51-26P FOR DET	NP		001
-200E	D2549020409883		. . ELECTRICAL SYSTEM used on 001G SEE 25-41-51-26R FOR DET	NP		001
-200F	F2547160007483		. . ELECTRICAL SYSTEM POST SB 25-1640 used on 001N SEE 25-41-51-26Q FOR DET	NP		001
210A	D9250000000185		. . ELECTRICAL SYSTEM-COCKPIT DOOR LOCKING used on 001A, 001B, 001C, 001D, 001E, 001F, 001H, 001J, 001K, 001L, 001M, 001N, 001P, 001Q, 001R SEE 25-41-51-31A FOR DET	NP		001
-210B	D9250000000285		. . ELECTRICAL SYSTEM-COCKPIT DOOR LOCKING used on 001G SEE 25-41-51-31B FOR DET	NP		001

- ITEM NOT ILLUSTRATED

THIS PAGE IS INTENTIONALLY LEFT BLANK

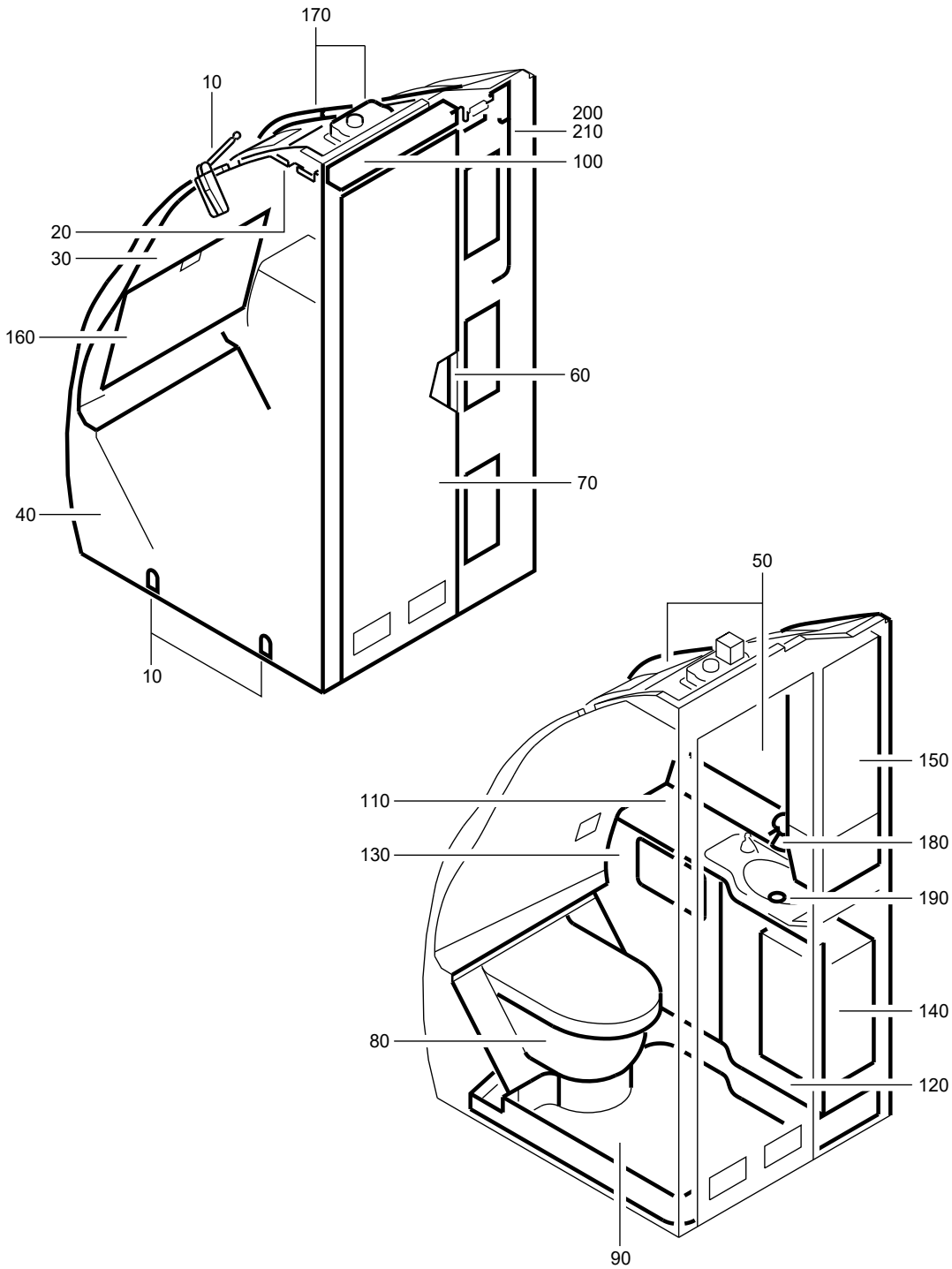

F_PL_254151_42_C_01_00

LAVATORY A ASSY
Figure 42C/EN254151SHEET42C01

FIG. ITEM	PART NUMBER	AIRLINE STOCK NUMBER	NOMENCLATURE 1234567	EFF CODE	UNITS PER ASSY
42C					
-001A	D2549020814600		. LAVATORY A ASSY SEE SIL 25-117 FOR DET		RF
-001B	D2549020810400		. LAVATORY A ASSY PRE VSB A2-254-25-077 SEE SIL 25-117 FOR DET		RF
-001C	D2549020814800		. LAVATORY A ASSY SEE SIL 25-117 FOR DET		RF
-001D	D2549010613000		. LAVATORY A ASSY SEE SIL 25-117 FOR DET		RF
-001E	D2549030408000		. LAVATORY A ASSY PRE VSB A2-254-25-106 SEE SIL 25-117 FOR DET		RF
-001F	D2549020801800		. LAVATORY A ASSY SEE SIL 25-117 FOR DET		RF
-001G	D2549020813400		. LAVATORY A ASSY SEE SIL 25-117 FOR DET		RF
-001H	D2549020812400		. LAVATORY A ASSY SEE SIL 25-117 FOR DET		RF
-001J	D2549030406000		. LAVATORY A ASSY SEE SIL 25-117 FOR DET		RF
-001K	D2549010614600		. LAVATORY A ASSY PRE VSB A2-254-25-047 SEE SIL 25-117 FOR DET		RF
-001L	D2549020400200		. LAVATORY A ASSY SEE SIL 25-117 FOR DET		RF
-001M	D2549020812600		. LAVATORY A ASSY SEE SIL 25-117 FOR DET		RF

- ITEM NOT ILLUSTRATED

FIG. ITEM	PART NUMBER	AIRLINE STOCK NUMBER	NOMENCLATURE 1234567		EFF CODE	UNITS PER ASSY
-001N	R225401643-004		. LAVATORY A ASSY POST VSB A2-254-25-077 SEE SIL 25-117 FOR DET			RF
-001P	R225401662-000		. LAVATORY A ASSY POST VSB A2-254-25-106			RF
-001Q	R225401658-000		. LAVATORY A ASSY POST VSB A2-254-25-047			RF
010A	D2549010613861		. . ATTACHMENT-LAVATORY PRE VSB A2-254-25-106 used on 001A, 001B, 001C, 001D, 001E, 001L, 001M, 001N SEE 25-41-51-02C FOR DET	NP		001
-010B	D2549030608061		. . ATTACHMENT-LAVATORY used on 001F, 001G, 001H, 001J, 001K, 001Q SEE 25-41-51-02C FOR DET	NP		001
-010C	R22540166200061		. . ATTACHMENT-LAVATORY POST VSB A2-254-25-106 used on 001P SEE 25-41-51-02C FOR DET	NP		001
020A	D2549030401463		. . PANEL-CEILING PRE VSB A2-254-25-106 used on 001A, 001B, 001C, 001D, 001E, 001F, 001G, 001H, 001J, 001K, 001L, 001M, 001N, 001Q SEE 25-41-51-040 FOR DET	NP		001
-020B	R22540166200063		. . PANEL-CEILING POST VSB A2-254-25-106 used on 001P SEE 25-41-51-040 FOR DET	NP		001

- ITEM NOT ILLUSTRATED

FIG. ITEM	PART NUMBER	AIRLINE STOCK NUMBER	NOMENCLATURE 1234567		EFF CODE	UNITS PER ASSY
030A	D2549020805464		. . WALL-REAR used on 001A, 001D, 001G, 001H, 001K, 001L, 001M, 001Q SEE 25-41-51-05H FOR DET	NP		001
-030B	D2549020807864		. . WALL-REAR used on 001B, 001J, 001N SEE 25-41-51-05H FOR DET	NP		001
-030C	D2549030406464		. . WALL-REAR PRE VSB A2-254-25-106 used on 001C, 001E, 001F SEE 25-41-51-05F FOR DET	NP		001
-030D	R22540166200064		. . WALL-REAR POST VSB A2-254-25-106 used on 001P SEE 25-41-51-05F FOR DET	NP		001
040A	D2549020812065		. . WALL-SIDE used on 001A SEE 25-41-51-48B FOR DET	NP		001
-040B	D2549020807665		. . WALL-SIDE used on 001B, 001N SEE 25-41-51-06Z FOR DET	NP		001
-040C	D2549020806865		. . WALL-SIDE used on 001C SEE 25-41-51-48B FOR DET	NP		001
-040D	D2549010613065		. . WALL-SIDE used on 001D SEE 25-41-51-480 FOR DET	NP		001
-040E	D2549030408065		. . WALL-SIDE PRE VSB A2-254-25-106 used on 001E SEE 25-41-51-48B FOR DET	NP		001

- ITEM NOT ILLUSTRATED

FIG. ITEM	PART NUMBER	AIRLINE STOCK NUMBER	NOMENCLATURE 1234567	EFF CODE	UNITS PER ASSY
-040F	D2549020801865		. . WALL-SIDE NP used on 001F SEE 25-41-51-48B FOR DET		001
-040G	D2549020813465		. . WALL-SIDE NP used on 001G SEE 25-41-51-48B FOR DET		001
-040H	D2549020811665		. . WALL-SIDE NP used on 001H SEE 25-41-51-48B FOR DET		001
-040J	D2549030406065		. . WALL-SIDE NP used on 001J SEE 25-41-51-48B FOR DET		001
-040K	D2549020400265		. . WALL-SIDE NP used on 001L, 001M SEE 25-41-51-48C FOR DET		001
-040L	D2549010614665		. . WALL-SIDE NP used on 001K, 001Q SEE 25-41-51-48C FOR DET		001
-040M	R22540166200065		. . WALL-SIDE NP POST VSB A2-254-25-106 used on 001P SEE 25-41-51-48B FOR DET		001
050A	D2549020812066		. . HOUSING NP used on 001A SEE 25-41-51-07Q FOR DET		001
-050B	D2549010400466		. . HOUSING NP used on 001B, 001N SEE 25-41-51-07T FOR DET		001
-050C	D2549020814866		. . HOUSING NP used on 001C SEE 25-41-51-07U FOR DET		001

- ITEM NOT ILLUSTRATED

FIG. ITEM	PART NUMBER	AIRLINE STOCK NUMBER	NOMENCLATURE 1234567		EFF CODE	UNITS PER ASSY
-050D	D2549010400466		. . HOUSING used on 001D, 001J SEE 25-41-51-07T FOR DET	NP		001
-050E	D2549030408066		. . HOUSING PRE VSB A2-254-25-106 used on 001E SEE 25-41-51-07U FOR DET	NP		001
-050F	D2549020801866		. . HOUSING used on 001F SEE 25-41-51-07U FOR DET	NP		001
-050G	D2549020813466		. . HOUSING used on 001G SEE 25-41-51-07V FOR DET	NP		001
-050H	D2549010400266		. . HOUSING used on 001H SEE 25-41-51-07U FOR DET	NP		001
-050J	D2549010614666		. . HOUSING used on 001K, 001Q SEE 25-41-51-07V FOR DET	NP		001
-050K	D2549020400266		. . HOUSING used on 001L, 001M SEE 25-41-51-07V FOR DET	NP		001
-050L	R22540166200066		. . HOUSING POST VSB A2-254-25-106 used on 001P SEE 25-41-51-07U FOR DET	NP		001
060A	D2549010500069		. . DOOR INSTL used on 001A, 001B, 001C, 001D, 001E, 001F, 001G, 001H, 001J, 001L, 001M, 001N, 001P SEE 25-41-51-100 FOR DET	NP		001

- ITEM NOT ILLUSTRATED

FIG. ITEM	PART NUMBER	AIRLINE STOCK NUMBER	NOMENCLATURE 1234567	EFF CODE	UNITS PER ASSY
-060B	D2549020401269		. . DOOR INSTL NP used on 001K, 001Q SEE 25-41-51-10A FOR DET		001
070A	A225400278-818		. . DOOR ASSY-SINGLE used on 001A SEE 25-41-51-11K FOR DET		001
-070B	A225400276-942		. . DOOR ASSY-SINGLE used on 001B, 001N SEE 25-41-51-11F FOR DET		001
-070C	A225400276-966		. . DOOR ASSY-SINGLE used on 001C SEE 25-41-51-11J FOR DET		001
-070D	A225400278-510		. . DOOR ASSY-SINGLE used on 001D SEE 25-41-51-11H FOR DET		001
-070E	A225400276-946		. . DOOR ASSY-SINGLE PRE VSB A2-254-25-106 used on 001E SEE 25-41-51-11G FOR DET		001
-070F	A225400278-824		. . DOOR ASSY-SINGLE used on 001F SEE 25-41-51-11H FOR DET		001
-070G	A225400278-820		. . DOOR ASSY-SINGLE used on 001G SEE 25-41-51-11M FOR DET		001
-070H	A225400278-900		. . DOOR ASSY-SINGLE used on 001H SEE 25-41-51-11K FOR DET		001
-070J	A225400276-578		. . DOOR ASSY-SINGLE used on 001J SEE 25-41-51-11F FOR DET		001

- ITEM NOT ILLUSTRATED

FIG. ITEM	PART NUMBER	AIRLINE STOCK NUMBER	NOMENCLATURE 1234567		EFF CODE	UNITS PER ASSY
-070K	A225400276-948		. . DOOR ASSY-SINGLE used on 001L, 001M SEE 25-41-51-11G FOR DET			001
-070L	A2254002768948		. . DOOR ASSY-SINGLE used on 001K, 001L, 001M, 001Q SEE 25-41-51-11N FOR DET			001
-070M	A225400278-926		. . DOOR ASSY-SINGLE POST VSB A2-254-25-106 used on 001P SEE 25-41-51-11G FOR DET			001
080A	D2549020514671		. . TOILET UNIT AND TOILET SHROUD used on 001A, 001B, 001N SEE 25-41-51-12E FOR DET	NP		001
-080B	D2549020513071		. . TOILET UNIT AND TOILET SHROUD used on 001C, 001G, 001K, 001L, 001Q SEE 25-41-51-12D FOR DET	NP		001
-080C	D2549010607071		. . TOILET UNIT AND TOILET SHROUD PRE VSB A2-254-25-106 used on 001D, 001E, 001F, 001J, 001M SEE 25-41-51-12D FOR DET	NP		001
-080D	D2549020512271		. . TOILET UNIT AND TOILET SHROUD used on 001H SEE 25-41-51-12D FOR DET	NP		001
-080E	R22540166200071		. . TOILET UNIT AND TOILET SHROUD POST VSB A2-254-25-106 used on 001P SEE 25-41-51-12D FOR DET	NP		001

- ITEM NOT ILLUSTRATED

FIG. ITEM	PART NUMBER	AIRLINE STOCK NUMBER	NOMENCLATURE 1234567	EFF CODE	UNITS PER ASSY
090A	D2549020812072		. . PAN-FLOOR NP used on 001A SEE 25-41-51-13K FOR DET		001
-090B	D2549020810472		. . PAN-FLOOR NP used on 001B, 001N SEE 25-41-51-13L FOR DET		001
-090C	D2549030404272		. . PAN-FLOOR NP PRE VSB A2-254-25-106 used on 001C, 001D, 001E, 001L, 001M SEE 25-41-51-13J FOR DET		001
-090D	D2549010611472		. . PAN-FLOOR NP used on 001F SEE 25-41-51-13L FOR DET		001
-090E	D2549020813472		. . PAN-FLOOR NP used on 001G SEE 25-41-51-13L FOR DET		001
-090F	D2549020811672		. . PAN-FLOOR NP used on 001H SEE 25-41-51-13K FOR DET		001
-090G	D2549030406072		. . PAN-FLOOR NP used on 001J SEE 25-41-51-13L FOR DET		001
-090H	D2549010514272		. . PAN-FLOOR NP used on 001K, 001Q SEE 25-41-51-13T FOR DET		001
-090J	R22540166200072		. . PAN-FLOOR NP POST VSB A2-254-25-106 used on 001P SEE 25-41-51-13J FOR DET		001

- ITEM NOT ILLUSTRATED

FIG. ITEM	PART NUMBER	AIRLINE STOCK NUMBER	NOMENCLATURE 1234567		EFF CODE	UNITS PER ASSY
100A	D2549010512673		. . LIGHT-DOOR PRE VSB A2-254-25-106 used on 001A, 001B, 001C, 001D, 001E, 001F, 001G, 001H, 001J, 001K, 001L, 001M, 001N, 001Q SEE 25-41-51-140 FOR DET	NP		001
-100B	R22540166200073		. . LIGHT-DOOR POST VSB A2-254-25-106 used on 001P SEE 25-41-51-140 FOR DET	NP		001
110A	D2549020706674		. . WASHBASIN UNIT used on 001A, 001H SEE 25-41-51-15D FOR DET	NP		001
-110B	D2549030514674		. . WASHBASIN UNIT PRE VSB A2-254-25-106 used on 001B, 001E, 001G, 001J, 001K, 001L, 001M, 001N, 001Q SEE 25-41-51-15G FOR DET	NP		001
-110C	D2549020704674		. . WASHBASIN UNIT used on 001C, 001D SEE 25-41-51-15G FOR DET	NP		001
-110D	D2549010610074		. . WASHBASIN UNIT used on 001F SEE 25-41-51-15H FOR DET	NP		001
-110E	R22540166200074		. . WASHBASIN UNIT POST VSB A2-254-25-106 used on 001P SEE 25-41-51-15G FOR DET	NP		001
120A	D2549020607675		. . DOOR ASSY-WASHBASIN UNIT used on 001A, 001B, 001N SEE 25-41-51-16C FOR DET	NP		001

- ITEM NOT ILLUSTRATED

FIG. ITEM	PART NUMBER	AIRLINE STOCK NUMBER	NOMENCLATURE 1234567	EFF CODE	UNITS PER ASSY
-120B	D2549020605475		. . DOOR ASSY-WASHBASIN UNIT NP used on 001C, 001G, 001K, 001L, 001Q SEE 25-41-51-16C FOR DET		001
-120C	D2549020607075		. . DOOR ASSY-WASHBASIN UNIT NP PRE VSB A2-254-25-106 used on 001D, 001E, 001F, 001J, 001M SEE 25-41-51-16B FOR DET		001
-120D	D2549010603675		. . DOOR ASSY-WASHBASIN UNIT NP used on 001H SEE 25-41-51-16C FOR DET		001
-120E	R22540166200075		. . DOOR ASSY-WASHBASIN UNIT NP POST VSB A2-254-25-106 used on 001P SEE 25-41-51-16B FOR DET		001
130A	D2549020607676		. . PANEL ASSY-WASHBASIN UNIT NP used on 001A, 001B, 001N SEE 25-41-51-17C FOR DET		001
-130B	D2549020605476		. . PANEL ASSY-WASHBASIN UNIT NP used on 001C, 001G, 001K, 001L, 001Q SEE 25-41-51-17D FOR DET		001
-130C	D2549030504876		. . PANEL ASSY-WASHBASIN UNIT NP PRE VSB A2-254-25-106 used on 001D, 001E, 001F, 001J, 001M SEE 25-41-51-17C FOR DET		001

- ITEM NOT ILLUSTRATED

FIG. ITEM	PART NUMBER	AIRLINE STOCK NUMBER	NOMENCLATURE 1234567		EFF CODE	UNITS PER ASSY
-130D	D2549010603676		. . PANEL ASSY-WASHBASIN UNIT used on 001H SEE 25-41-51-17D FOR DET	NP		001
-130E	R22540166200076		. . PANEL ASSY-WASHBASIN UNIT POST VSB A2-254-25-106 used on 001P SEE 25-41-51-17C FOR DET	NP		001
140A	D2549010611677		. . BIN-WASTE,CHUTE-WASTE AND EXTINGUISHER-FIRE used on 001A, 001B, 001C, 001D, 001E, 001F, 001G, 001H, 001J, 001K, 001L, 001M, 001N, 001P, 001Q SEE 25-41-51-180 FOR DET	NP		001
150A	D2549030504078		. . CABINET-SERVICE PRE VSB A2-254-25-106 used on 001A, 001E, 001G SEE 25-41-51-19E FOR DET	NP		001
-150B	D2549030504878		. . CABINET-SERVICE PRE VSB A2-254-25-077 used on 001B, 001C, 001F, 001H, 001J, 001K, 001L, 001M, 001Q SEE 25-41-51-19E FOR DET	NP		001
-150C	D2549030505278		. . CABINET-SERVICE used on 001D SEE 25-41-51-19E FOR DET	NP		001
-150D	R22540162900278		. . CABINET-SERVICE POST VSB A2-254-25-077 used on 001N SEE 25-41-51-19E FOR DET	NP		001

- ITEM NOT ILLUSTRATED

FIG. ITEM	PART NUMBER	AIRLINE STOCK NUMBER	NOMENCLATURE 1234567		EFF CODE	UNITS PER ASSY
-150E	R22540166200078		. . CABINET-SERVICE POST VSB A2-254-25-106 used on 001P SEE 25-41-51-19E FOR DET	NP		001
160A	D2549010510679		. . TABLE-NURSING PRE VSB A2-254-25-106 used on 001A, 001C, 001E, 001F, 001G, 001H, 001J, 001K, 001L, 001M, 001Q SEE 25-41-51-20A FOR DET	NP		001
-160B	D2549010512679		. . TABLE-NURSING used on 001B, 001D, 001N SEE 25-41-51-20A FOR DET	NP		001
-160C	R22540166200079		. . TABLE-NURSING POST VSB A2-254-25-106 used on 001P SEE 25-41-51-20A FOR DET	NP		001
170A	D2549020802680		. . VENTILATION SYSTEM PRE VSB A2-254-25-106 used on 001A, 001B, 001C, 001D, 001E, 001F, 001G, 001H, 001J, 001K, 001L, 001M, 001N, 001Q SEE 25-41-51-21B FOR DET	NP		001
-170B	R22540166200080		. . VENTILATION SYSTEM POST VSB A2-254-25-106 used on 001P SEE 25-41-51-21B FOR DET	NP		001
180A	D2549010606081		. . WATER SYSTEM-POTABLE PRE VSB A2-254-25-077 used on 001A, 001B, 001C, 001D, 001E, 001F, 001G, 001H, 001J, 001K, 001L, 001M, 001P, 001Q SEE 25-41-51-22D FOR DET	NP		001

- ITEM NOT ILLUSTRATED

FIG. ITEM	PART NUMBER	AIRLINE STOCK NUMBER	NOMENCLATURE 1234567		EFF CODE	UNITS PER ASSY
-180B	R22540162900281		. . WATER SYSTEM-POTABLE POST VSB A2-254-25-077 used on 001N SEE 25-41-51-22D FOR DET	NP		001
190A	D2549020800882		. . WATER SYSTEM-WASTE PRE VSB A2-254-25-077 used on 001A, 001B, 001E, 001G, 001H, 001J, 001K, 001L, 001M, 001P, 001Q SEE 25-41-51-23D FOR DET	NP		001
-190B	D2549030614682		. . WATER SYSTEM-WASTE used on 001C, 001D, 001F SEE 25-41-51-23D FOR DET	NP		001
-190C	R22540164300482		. . WATER SYSTEM-WASTE POST VSB A2-254-25-077 used on 001N SEE 25-41-51-23D FOR DET	NP		001
200A	D2549020513083		. . ELECTRICAL SYSTEM used on 001A, 001B, 001C, 001D, 001F, 001H, 001J, 001L, 001N SEE 25-41-51-26M FOR DET	NP		001
-200B	D2549020514883		. . ELECTRICAL SYSTEM used on 001E, 001G, 001P SEE 25-41-51-26N FOR DET	NP		001
-200C	D2549020810283		. . ELECTRICAL SYSTEM used on 001M SEE 25-41-51-26P FOR DET	NP		001
-200D	D2549010607283		. . ELECTRICAL SYSTEM used on 001K, 001Q SEE 25-41-51-26M FOR DET	NP		001

- ITEM NOT ILLUSTRATED

FIG. ITEM	PART NUMBER	AIRLINE STOCK NUMBER	NOMENCLATURE 1234567		EFF CODE	UNITS PER ASSY
210A	D9250000000185		. . ELECTRICAL SYSTEM-COCKPIT DOOR LOCKING used on 001A, 001B, 001C, 001D, 001E, 001F, 001G, 001H, 001J, 001K, 001L, 001M, 001N, 001P, 001Q SEE 25-41-51-31A FOR DET	NP		001

- ITEM NOT ILLUSTRATED

THIS PAGE IS INTENTIONALLY LEFT BLANK

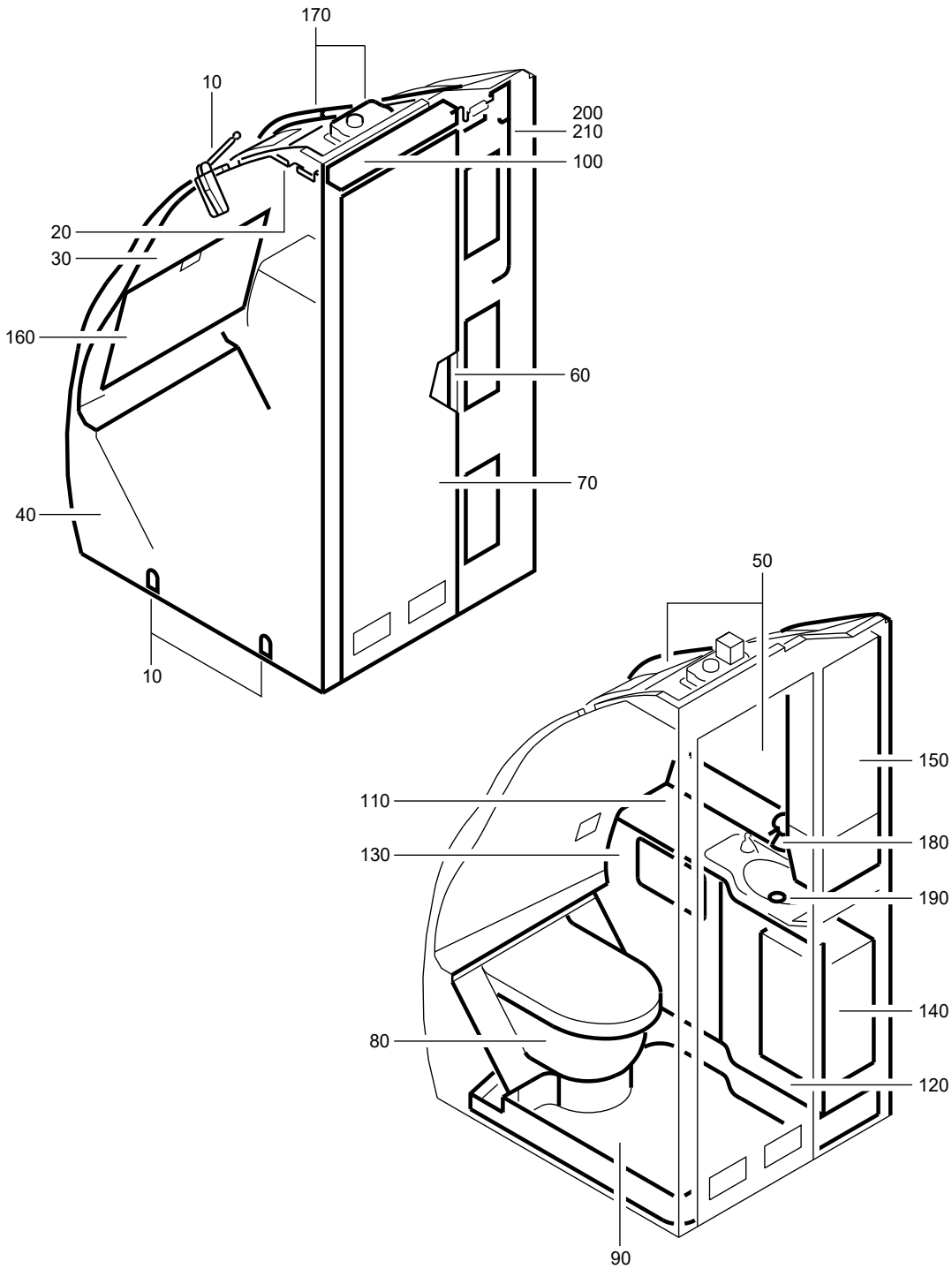

F_PL_254151_42_D_01_00

LAVATORY A ASSY
Figure 42D/EN254151SHEET42D01

FIG. ITEM	PART NUMBER	AIRLINE STOCK NUMBER	NOMENCLATURE 1234567	EFF CODE	UNITS PER ASSY
42D					
-001A	D2549010614800		. LAVATORY A ASSY SEE SIL 25-117 FOR DET		RF
-001B	D2549020405600		. LAVATORY A ASSY SEE SIL 25-117 FOR DET		RF
-001C	D2549020810800		. LAVATORY A ASSY SEE SIL 25-117 FOR DET		RF
-001D	D2549020405400		. LAVATORY A ASSY PRE VSB A2-254-25-020 SEE SIL 25-117 FOR DET		RF
-001E	D2549020813200		. LAVATORY A ASSY SEE SIL 25-117 FOR DET		RF
-001F	D2549010400800		. LAVATORY A ASSY SEE SIL 25-117 FOR DET		RF
-001G	D2549030408200		. LAVATORY A ASSY SEE SIL 25-117 FOR DET		RF
-001H	D2549020403800		. LAVATORY A ASSY SEE SIL 25-117 FOR DET		RF
-001J	D2549030408400		. LAVATORY A ASSY SEE SIL 25-117 FOR DET		RF
-001K	D2549010400000		. LAVATORY A ASSY VSB A2-254-25-013 SEE SIL 25-117 FOR DET		RF
-001L	D2549020400000		. LAVATORY A ASSY SEE SIL 25-117 FOR DET		RF
-001M	D2549030409800		. LAVATORY A ASSY SEE SIL 25-117 FOR DET		RF

- ITEM NOT ILLUSTRATED

FIG. ITEM	PART NUMBER	AIRLINE STOCK NUMBER	NOMENCLATURE 1234567		EFF CODE	UNITS PER ASSY
-001N	R225401639002		. LAVATORY A ASSY POST VSB A2-254-25-020 SEE SIL 25-117 FOR DET			RF
010A	D2549010613861		. . ATTACHMENT-LAVATORY PRE VSB A2-254-25-013 used on 001A, 001C, 001D, 001F, 001H, 001J, 001K, 001L, 001M, 001N SEE 25-41-51-02C FOR DET	NP		001
-010B	D2549030608061		. . ATTACHMENT-LAVATORY used on 001B, 001E SEE 25-41-51-02C FOR DET	NP		001
-010C	D2549030408261		. . ATTACHMENT-LAVATORY used on 001G SEE 25-41-51-02C FOR DET	NP		001
-010D	D2549010613861		. . ATTACHMENT-LAVATORY POST VSB A2-254-25-013 used on 001K SEE 25-41-51-02C FOR DET	NP		001
020A	D2549030401463		. . PANEL-CEILING used on 001A, 001B, 001C, 001D, 001E, 001F, 001H, 001J, 001K, 001L, 001M, 001N SEE 25-41-51-040 FOR DET	NP		001
-020B	D2549030408263		. . PANEL-CEILING used on 001G SEE 25-41-51-04A FOR DET	NP		001
030A	D2549020812264		. . WALL-REAR used on 001A SEE 25-41-51-05H FOR DET	NP		001

- ITEM NOT ILLUSTRATED

FIG. ITEM	PART NUMBER	AIRLINE STOCK NUMBER	NOMENCLATURE 1234567		EFF CODE	UNITS PER ASSY
-030B	D2549020805464		. . WALL-REAR used on 001B, 001D, 001H, 001K, 001L, 001M, 001N SEE 25-41-51-05H FOR DET	NP		001
-030C	D2549020807864		. . WALL-REAR used on 001C SEE 25-41-51-05H FOR DET	NP		001
-030D	D2549030406464		. . WALL-REAR used on 001E, 001J SEE 25-41-51-05F FOR DET	NP		001
-030E	D2549010400864		. . WALL-REAR used on 001F SEE 25-41-51-05J FOR DET	NP		001
-030F	D2549030408264		. . WALL-REAR used on 001G SEE 25-41-51-05J FOR DET	NP		001
040A	D2549020804065		. . WALL-SIDE used on 001A SEE 25-41-51-06Z FOR DET	NP		001
-040B	D2549010611065		. . WALL-SIDE used on 001B SEE 25-41-51-06Z FOR DET	NP		001
-040C	D2549020810865		. . WALL-SIDE used on 001C SEE 25-41-51-48C FOR DET	NP		001
-040D	D2549020809065		. . WALL-SIDE PRE VSB A2-254-25-020 used on 001D SEE 25-41-51-06Z FOR DET	NP		001
-040E	D2549020813265		. . WALL-SIDE used on 001E SEE 25-41-51-48C FOR DET	NP		001

- ITEM NOT ILLUSTRATED

FIG. ITEM	PART NUMBER	AIRLINE STOCK NUMBER	NOMENCLATURE 1234567	EFF CODE	UNITS PER ASSY
-040F	D2549010400865		. . WALL-SIDE NP used on 001F SEE 25-41-51-48C FOR DET		001
-040G	D2549030408265		. . WALL-SIDE NP used on 001G SEE 25-41-51-48C FOR DET		001
-040H	D2549020403865		. . WALL-SIDE NP used on 001H SEE 25-41-51-48C FOR DET		001
-040J	D2549030408465		. . WALL-SIDE NP used on 001J SEE 25-41-51-48C FOR DET		001
-040K	D2549010400065		. . WALL-SIDE NP PRE VSB A2-254-25-013 used on 001K SEE 25-41-51-48D FOR DET		001
-040L	D2549020400065		. . WALL-SIDE NP used on 001L SEE 25-41-51-48C FOR DET		001
-040M	D2549030409865		. . WALL-SIDE NP used on 001M SEE 25-41-51-48D FOR DET		001
-040N	D2549010400065		. . WALL-SIDE NP POST VSB A2-254-25-013 used on 001K SEE 25-41-51-48D FOR DET		001
-040P	R22540163900065		. . WALL-SIDE NP POST VSB A2-254-25-020 used on 001N SEE 25-41-51-06Z FOR DET		001

- ITEM NOT ILLUSTRATED

FIG. ITEM	PART NUMBER	AIRLINE STOCK NUMBER	NOMENCLATURE 1234567		EFF CODE	UNITS PER ASSY
050A	D2549030406866		. . HOUSING used on 001A SEE 25-41-51-07T FOR DET	NP		001
-050B	D2549020814466		. . HOUSING used on 001B SEE 25-41-51-07T FOR DET	NP		001
-050C	D2549020810866		. . HOUSING used on 001C SEE 25-41-51-07U FOR DET	NP		001
-050D	D2549010400466		. . HOUSING used on 001D, 001N SEE 25-41-51-07T FOR DET	NP		001
-050E	D2549020813266		. . HOUSING used on 001E SEE 25-41-51-07V FOR DET	NP		001
-050F	D2549010400866		. . HOUSING used on 001F, 001L SEE 25-41-51-07V FOR DET	NP		001
-050G	D2549030408266		. . HOUSING used on 001G SEE 25-41-51-07V FOR DET	NP		001
-050H	D2549020403866		. . HOUSING used on 001H SEE 25-41-51-07V FOR DET	NP		001
-050J	D2549030408466		. . HOUSING used on 001J SEE 25-41-51-07V FOR DET	NP		001
-050K	D2549030409866		. . HOUSING used on 001M SEE 25-41-51-07V FOR DET	NP		001

- ITEM NOT ILLUSTRATED

FIG. ITEM	PART NUMBER	AIRLINE STOCK NUMBER	NOMENCLATURE 1234567		EFF CODE	UNITS PER ASSY
-050L	D2549010400066		. . HOUSING PRE VSB A2-254-25-013 used on 001K SEE 25-41-51-07V FOR DET	NP		001
-050M	D2549010400066		. . HOUSING POST VSB A2-254-25-013 used on 001K SEE 25-41-51-07V FOR DET	NP		001
060A	D2549010500069		. . DOOR INSTL used on 001A, 001B, 001C, 001D, 001E, 001F, 001G, 001J, 001L, 001M, 001N SEE 25-41-51-100 FOR DET	NP		001
-060B	D2549020401269		. . DOOR INSTL used on 001H, 001K SEE 25-41-51-10A FOR DET	NP		001
070A	A225400278-800		. . DOOR ASSY-SINGLE used on 001A SEE 25-41-51-11H FOR DET			001
-070B	A225400276-596		. . DOOR ASSY-SINGLE used on 001B SEE 25-41-51-11G FOR DET			001
-070C	A225400278-514		. . DOOR ASSY-SINGLE used on 001C SEE 25-41-51-11H FOR DET			001
-070D	A225400278-810		. . DOOR ASSY-SINGLE used on 001D, 001N SEE 25-41-51-11K FOR DET			001
-070E	A225400278-532		. . DOOR ASSY-SINGLE used on 001E SEE 25-41-51-11M FOR DET			001

- ITEM NOT ILLUSTRATED

FIG. ITEM	PART NUMBER	AIRLINE STOCK NUMBER	NOMENCLATURE 1234567	EFF CODE	UNITS PER ASSY
-070F	A225400276-942		. . DOOR ASSY-SINGLE used on 001F SEE 25-41-51-11F FOR DET		001
-070G	A225400278-828		. . DOOR ASSY-SINGLE used on 001G SEE 25-41-51-11M FOR DET		001
-070H	A225400278-830		. . DOOR ASSY-SINGLE used on 001J SEE 25-41-51-11M FOR DET		001
-070J	A2254002768578		. . DOOR ASSY-SINGLE used on 001K SEE 25-41-51-11N FOR DET		001
-070K	A225400276-904		. . DOOR ASSY-SINGLE used on 001L SEE 25-41-51-11B FOR DET		001
-070L	A225400276-574		. . DOOR ASSY-SINGLE used on 001M SEE 25-41-51-11E FOR DET		001
-070M	A2254002768942		. . DOOR ASSY-SINGLE used on 001F, 001H SEE 25-41-51-11F FOR DET		001
080A	D2549010607071		. . TOILET UNIT AND TOILET SHROUD used on 001A, 001C, 001J, 001K, 001L, 001M SEE 25-41-51-12D FOR DET	NP	001
-080B	D2549020512271		. . TOILET UNIT AND TOILET SHROUD used on 001B SEE 25-41-51-12D FOR DET	NP	001

- ITEM NOT ILLUSTRATED

FIG. ITEM	PART NUMBER	AIRLINE STOCK NUMBER	NOMENCLATURE 1234567		EFF CODE	UNITS PER ASSY
-080C	D2549030408271		. . TOILET UNIT AND TOILET SHROUD used on 001G SEE 25-41-51-12E FOR DET	NP		001
-080D	D2549020514671		. . TOILET UNIT AND TOILET SHROUD used on 001D, 001F, 001H, 001N SEE 25-41-51-12E FOR DET	NP		001
-080E	D2549020813271		. . TOILET UNIT AND TOILET SHROUD used on 001E SEE 25-41-51-12G FOR DET	NP		001
090A	D2549030400672		. . PAN-FLOOR used on 001A SEE 25-41-51-13K FOR DET	NP		001
-090B	D2549020808872		. . PAN-FLOOR used on 001B SEE 25-41-51-13J FOR DET	NP		001
-090C	D2549030402272		. . PAN-FLOOR used on 001C SEE 25-41-51-13J FOR DET	NP		001
-090D	D2549020405472		. . PAN-FLOOR used on 001D, 001N SEE 25-41-51-13L FOR DET	NP		001
-090E	D2549020813272		. . PAN-FLOOR used on 001E SEE 25-41-51-13L FOR DET	NP		001
-090F	D2549010400872		. . PAN-FLOOR used on 001F SEE 25-41-51-13M FOR DET	NP		001

- ITEM NOT ILLUSTRATED

FIG. ITEM	PART NUMBER	AIRLINE STOCK NUMBER	NOMENCLATURE 1234567		EFF CODE	UNITS PER ASSY
-090G	D2549030408272		. . PAN-FLOOR used on 001G SEE 25-41-51-13M FOR DET	NP		001
-090J	D2549030404272		. . PAN-FLOOR used on 001J SEE 25-41-51-13J FOR DET	NP		001
-090K	D2549010514272		. . PAN-FLOOR used on 001H, 001K SEE 25-41-51-13T FOR DET	NP		001
-090L	D2549020400072		. . PAN-FLOOR used on 001L SEE 25-41-51-13M FOR DET	NP		001
-090M	D2549030401272		. . PAN-FLOOR used on 001M SEE 25-41-51-13K FOR DET	NP		001
100A	D2549010512673		. . LIGHT-DOOR used on 001A, 001B, 001C, 001D, 001E, 001F, 001H, 001J, 001K, 001L, 001M, 001N SEE 25-41-51-140 FOR DET	NP		001
-100B	D2549030408273		. . LIGHT-DOOR used on 001G SEE 25-41-51-14A FOR DET	NP		001
110A	D2549030514674		. . WASHBASIN UNIT used on 001A, 001C, 001M SEE 25-41-51-15G FOR DET	NP		001
-110B	D2549020700674		. . WASHBASIN UNIT used on 001B SEE 25-41-51-15G FOR DET	NP		001

- ITEM NOT ILLUSTRATED

FIG. ITEM	PART NUMBER	AIRLINE STOCK NUMBER	NOMENCLATURE 1234567		EFF CODE	UNITS PER ASSY
-110C	D2549020704674		. . WASHBASIN UNIT used on 001D, 001F, 001J, 001K, 001L, 001N SEE 25-41-51-15G FOR DET	NP		001
-110D	D2549020813274		. . WASHBASIN UNIT used on 001E SEE 25-41-51-15K FOR DET	NP		001
-110E	D2549030408274		. . WASHBASIN UNIT used on 001G SEE 25-41-51-15D FOR DET	NP		001
-110F	D2549020403874		. . WASHBASIN UNIT used on 001H SEE 25-41-51-15K FOR DET	NP		001
120A	D2549020607075		. . DOOR ASSY-WASHBASIN UNIT used on 001A, 001J, 001K SEE 25-41-51-16B FOR DET	NP		001
-120B	D2549010603675		. . DOOR ASSY-WASHBASIN UNIT used on 001B SEE 25-41-51-16C FOR DET	NP		001
-120C	D2549030606075		. . DOOR ASSY-WASHBASIN UNIT used on 001C, 001L, 001M SEE 25-41-51-16E FOR DET	NP		001
-120D	D2549020607675		. . DOOR ASSY-WASHBASIN UNIT used on 001D, 001F, 001H, 001N SEE 25-41-51-16C FOR DET	NP		001
-120E	D2549010609875		. . DOOR ASSY-WASHBASIN UNIT used on 001E SEE 25-41-51-16C FOR DET	NP		001

- ITEM NOT ILLUSTRATED

FIG. ITEM	PART NUMBER	AIRLINE STOCK NUMBER	NOMENCLATURE 1234567		EFF CODE	UNITS PER ASSY
-120F	D2549030506075		. . DOOR ASSY-WASHBASIN UNIT used on 001G SEE 25-41-51-16B FOR DET	NP		001
130A	D2549030504876		. . PANEL ASSY-WASHBASIN UNIT used on 001A, 001C, 001J, 001K, 001L, 001M SEE 25-41-51-17C FOR DET	NP		001
-130B	D2549010603676		. . PANEL ASSY-WASHBASIN UNIT used on 001B SEE 25-41-51-17D FOR DET	NP		001
-130C	D2549020607676		. . PANEL ASSY-WASHBASIN UNIT used on 001D, 001F, 001H, 001N SEE 25-41-51-17C FOR DET	NP		001
-130D	D2549010609876		. . PANEL ASSY-WASHBASIN UNIT used on 001E SEE 25-41-51-17D FOR DET	NP		001
-130E	D2549030506076		. . PANEL ASSY-WASHBASIN UNIT used on 001G SEE 25-41-51-17C FOR DET	NP		001
140A	D2549030504877		. . BIN-WASTE,CHUTE-WASTE AND EXTINGUISHER-FIRE used on 001A SEE 25-41-51-180 FOR DET	NP		001

- ITEM NOT ILLUSTRATED

FIG. ITEM	PART NUMBER	AIRLINE STOCK NUMBER	NOMENCLATURE 1234567		EFF CODE	UNITS PER ASSY
-140B	D2549010611677		. . BIN-WASTE,CHUTE-WASTE AND EXTINGUISHER-FIRE used on 001B, 001C, 001D, 001E, 001F, 001G, 001H, 001J, 001K, 001L, 001M, 001N SEE 25-41-51-180 FOR DET	NP		001
150A	D2549030504078		. . CABINET-SERVICE used on 001A SEE 25-41-51-19E FOR DET	NP		001
-150B	D2549030504878		. . CABINET-SERVICE PRE VSB A2-254-25-013 PRE VSB A2-254-25-020 used on 001B, 001C, 001D, 001E, 001F, 001H, 001J, 001K, 001M, 001N SEE 25-41-51-19E FOR DET	NP		001
-150C	D2549030408278		. . CABINET-SERVICE used on 001G SEE 25-41-51-19F FOR DET	NP		001
-150D	D2549020400078		. . CABINET-SERVICE used on 001L SEE 25-41-51-19H FOR DET	NP		001
-150E	D2549030504878		. . CABINET-SERVICE POST VSB A2-254-25-013 used on 001K SEE 25-41-51-19E FOR DET	NP		001
-150F	R22540163900078		. . CABINET-SERVICE POST VSB A2-254-25-020 used on 001N SEE 25-41-51-19E FOR DET	NP		001

- ITEM NOT ILLUSTRATED

FIG. ITEM	PART NUMBER	AIRLINE STOCK NUMBER	NOMENCLATURE 1234567		EFF CODE	UNITS PER ASSY
160A	D2549010510679		. . TABLE-NURSING used on 001A, 001B, 001C, 001D, 001F, 001H, 001J, 001K, 001L, 001N SEE 25-41-51-20A FOR DET	NP		001
-160B	D2549020813279		. . TABLE-NURSING used on 001E SEE 25-41-51-20C FOR DET	NP		001
-160C	D2549030408279		. . TABLE-NURSING used on 001G SEE 25-41-51-20B FOR DET	NP		001
-160D	D2549010512679		. . TABLE-NURSING used on 001M SEE 25-41-51-20A FOR DET	NP		001
170A	D2549020802680		. . VENTILATION SYSTEM used on 001A, 001B, 001C, 001D, 001E, 001F, 001H, 001J, 001K, 001L, 001M, 001N SEE 25-41-51-21B FOR DET	NP		001
-170B	D2549030408280		. . VENTILATION SYSTEM used on 001G SEE 25-41-51-21B FOR DET	NP		001
180A	D2549030402081		. . WATER SYSTEM-POTABLE used on 001A, 001M SEE 25-41-51-22G FOR DET	NP		001
-180B	D2549010606081		. . WATER SYSTEM-POTABLE used on 001B, 001C, 001D, 001E, 001F, 001G, 001H, 001J, 001K, 001L, 001N SEE 25-41-51-22D FOR DET	NP		001
190A	D2549030405082		. . WATER SYSTEM-WASTE used on 001A, 001M SEE 25-41-51-23B FOR DET	NP		001

- ITEM NOT ILLUSTRATED

FIG. ITEM	PART NUMBER	AIRLINE STOCK NUMBER	NOMENCLATURE 1234567		EFF CODE	UNITS PER ASSY
-190B	D2549010511082		. . WATER SYSTEM-WASTE used on 001B, 001C, 001H SEE 25-41-51-23B FOR DET	NP		001
-190C	D2549030504882		. . WATER SYSTEM-WASTE used on 001D, 001E, 001F, 001G, 001J, 001K, 001L, 001N SEE 25-41-51-23B FOR DET	NP		001
200A	D2549020810283		. . ELECTRICAL SYSTEM used on 001A, 001B, 001C, 001D, 001F, 001H, 001L, 001N SEE 25-41-51-26P FOR DET	NP		001
-200B	D2549020514883		. . ELECTRICAL SYSTEM used on 001E SEE 25-41-51-26N FOR DET	NP		001
-200C	D2549030408283		. . ELECTRICAL SYSTEM used on 001G, 001J SEE 25-41-51-26P FOR DET	NP		001
-200D	D2549020513083		. . ELECTRICAL SYSTEM used on 001M SEE 25-41-51-26M FOR DET	NP		001
-200E	D2549010400083		. . ELECTRICAL SYSTEM used on 001K SEE 25-41-51-26T FOR DET	NP		001
210A	D9250000000185		. . ELECTRICAL SYSTEM-COCKPIT DOOR LOCKING used on 001A, 001B, 001C, 001D, 001E, 001F, 001G, 001H, 001J, 001K, 001L, 001M, 001N SEE 25-41-51-31A FOR DET	NP		001

- ITEM NOT ILLUSTRATED

THIS PAGE IS INTENTIONALLY LEFT BLANK

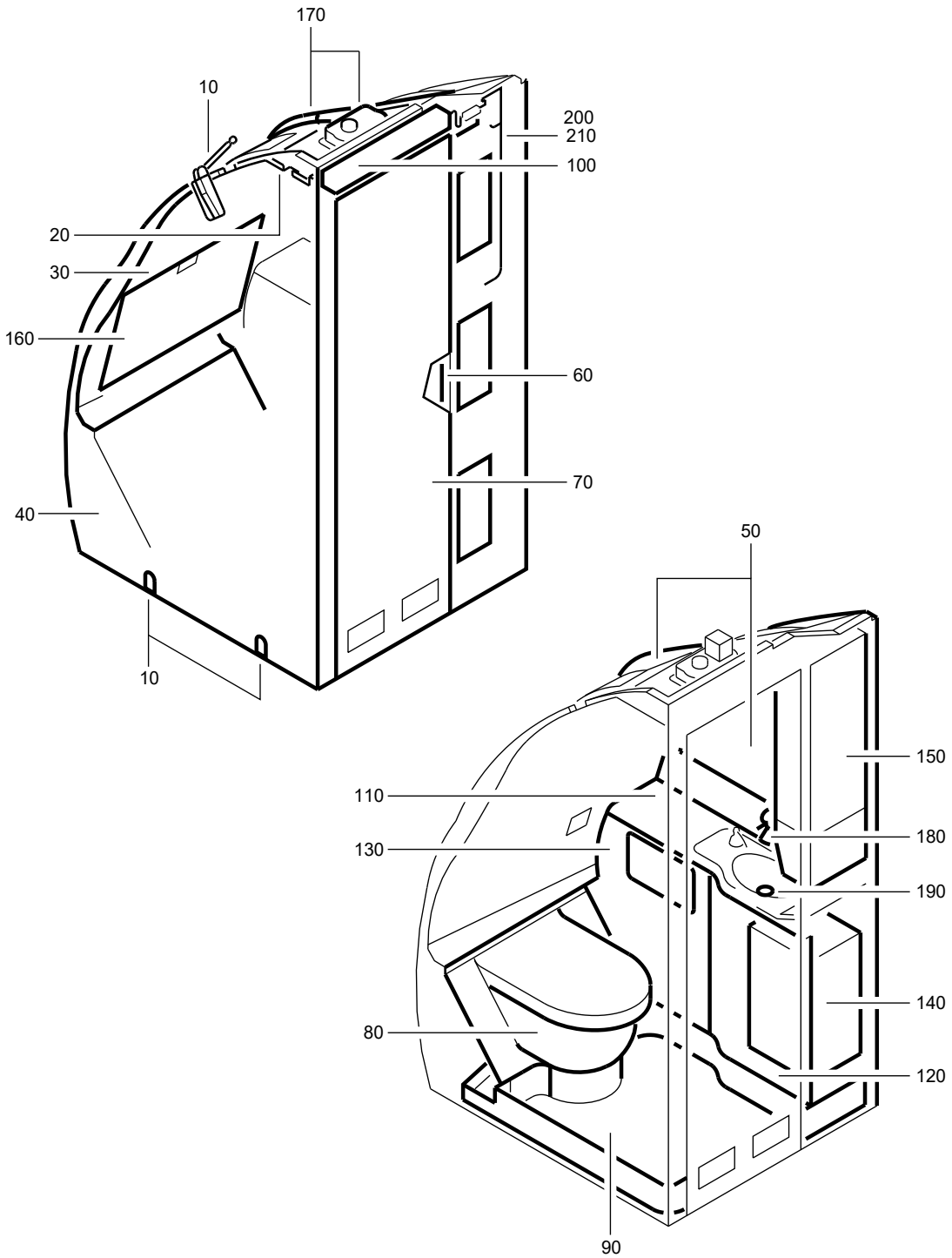

F_PL_254151_42_E_01_00

LAVATORY A ASSY
Figure 42E/EN254151SHEET42E01

FIG. ITEM	PART NUMBER	AIRLINE STOCK NUMBER	NOMENCLATURE 1234567	EFF CODE	UNITS PER ASSY
42E					
-001A	D2549020805200		. LAVATORY A ASSY SEE SIL 25-117 FOR DET		RF
-001B	D2549020404600		. LAVATORY A ASSY SEE SIL 25-117 FOR DET		RF
-001C	D2549010614400		. LAVATORY A ASSY SEE SIL 25-117 FOR DET		RF
-001D	D2549020811200		. LAVATORY A ASSY SEE SIL 25-117 FOR DET		RF
-001E	D2549030406600		. LAVATORY A ASSY PRE VSB A2-254-25-069 PRE VSB A2-254-25-100 SEE SIL 25-117 FOR DET		RF
-001F	D2549020401200		. LAVATORY A ASSY SEE SIL 25-117 FOR DET		RF
-001G	D2549020807200		. LAVATORY A ASSY SEE SIL 25-117 FOR DET		RF
-001H	D2549020402600		. LAVATORY A ASSY PRE VSB A2-254-25-042 SEE SIL 25-117 FOR DET		RF
-001J	D2549020403400		. LAVATORY A ASSY PRE VSB A2-254-25-069 PRE VSB A2-254-25-100 SEE SIL 25-117 FOR DET		RF
-001K	D2549030409000		. LAVATORY A ASSY PRE VSB A2-254-25-046 SEE SIL 25-117 FOR DET		RF
-001L	D2549020403000		. LAVATORY A ASSY PRE VSB A2-254-25-046 SEE SIL 25-117 FOR DET		RF

- ITEM NOT ILLUSTRATED

FIG. ITEM	PART NUMBER	AIRLINE STOCK NUMBER	NOMENCLATURE 1234567	EFF CODE	UNITS PER ASSY
-001M	D2549010610600		. LAVATORY A ASSY PRE VSB A2-254-25-047 SEE SIL 25-117 FOR DET		RF
-001N	D2549020807200		. LAVATORY A ASSY		RF
-001P	R225401196-018		. LAVATORY A ASSY PRE VSB A2-254-25-130 POST VSB A2-254-25-042 SEE SIL 25-117 FOR DET		RF
-001Q	R225401134-038		. LAVATORY A ASSY POST VSB A2-254-25-046		RF
-001R	R225401134-014		. LAVATORY A ASSY POST VSB A2-254-25-046		RF
-001S	R225401136-012		. LAVATORY A ASSY POST VSB A2-254-25-069		RF
-001T	R225401136-004		. LAVATORY A ASSY POST VSB A2-254-25-069		RF
-001U	R225401183-004		. LAVATORY A ASSY POST VSB A2-254-25-047		RF
-001V	R225401136-018		. LAVATORY A ASSY POST VSB A2-254-25-100		RF
-001W	R225401136-024		. LAVATORY A ASSY POST VSB A2-254-25-100		RF
-001X	R225401196-064		. LAVATORY A ASSY POST VSB A2-254-25-130 SEE SIL 25-117 FOR DET		RF
010A	D2549020805261		. . ATTACHMENT-LAVATORY NP used on 001A SEE 25-41-51-02C FOR DET		001

- ITEM NOT ILLUSTRATED

FIG. ITEM	PART NUMBER	AIRLINE STOCK NUMBER	NOMENCLATURE 1234567	EFF CODE	UNITS PER ASSY
-010B	D2549010613861		. . ATTACHMENT-LAVATORY NP used on 001B, 001C, 001D, 001E, 001F, 001J, 001M, 001S, 001T, 001U, 001V, 001W SEE 25-41-51-02C FOR DET		001
-010C	D2549020400861		. . ATTACHMENT-LAVATORY NP PRE VSB A2-254-25-130 used on 001G, 001H, 001N, 001P SEE 25-41-51-02B FOR DET		001
-010D	D2549030612861		. . ATTACHMENT-LAVATORY NP used on 001K, 001L, 001Q, 001R SEE 25-41-51-02C FOR DET		001
-010E	R22540119606461		. . ATTACHMENT-LAVATORY NP POST VSB A2-254-25-130 used on 001X SEE 25-41-51-02B FOR DET		001
020A	D2549020805263		. . PANEL-CEILING NP used on 001A SEE 25-41-51-04A FOR DET		001
-020B	D2549030401463		. . PANEL-CEILING NP PRE VSB A2-254-25-130 used on 001B, 001C, 001D, 001E, 001F, 001G, 001H, 001J, 001M, 001N, 001P, 001S, 001T, 001U, 001V, 001W SEE 25-41-51-040 FOR DET		001
-020C	D2549030405263		. . PANEL-CEILING NP used on 001K, 001L, 001Q, 001R SEE 25-41-51-04A FOR DET		001
-020D	R22540119604663		. . PANEL-CEILING NP POST VSB A2-254-25-130 used on 001X SEE 25-41-51-040 FOR DET		001

- ITEM NOT ILLUSTRATED

FIG. ITEM	PART NUMBER	AIRLINE STOCK NUMBER	NOMENCLATURE 1234567	EFF CODE	UNITS PER ASSY
030A	D2549020805264		. . WALL-REAR NP used on 001A SEE 25-41-51-05H FOR DET		001
-030B	D2549020805464		. . WALL-REAR NP PRE VSB A2-254-25-130 used on 001B, 001C, 001D, 001E, 001F, 001G, 001H, 001N, 001P, 001T, 001V SEE 25-41-51-05H FOR DET		001
-030C	D2549010400864		. . WALL-REAR NP used on 001J, 001S, 001W SEE 25-41-51-05J FOR DET		001
-030D	D2549030404664		. . WALL-REAR NP used on 001K, 001L, 001Q, 001R SEE 25-41-51-05H FOR DET		001
-030E	D2549030406464		. . WALL-REAR NP used on 001M, 001U SEE 25-41-51-05F FOR DET		001
-030F	D2549010613264		. . WALL-REAR NP POST VSB A2-254-25-130 used on 001X SEE 25-41-51-05H FOR DET		001
040A	D2549020805265		. . WALL-SIDE NP used on 001A SEE 25-41-51-48D FOR DET		001
-040B	D2549020813665		. . WALL-SIDE NP used on 001B SEE 25-41-51-48C FOR DET		001
-040C	D2549030613665		. . WALL-SIDE NP used on 001C SEE 25-41-51-06Y FOR DET		001

- ITEM NOT ILLUSTRATED

FIG. ITEM	PART NUMBER	AIRLINE STOCK NUMBER	NOMENCLATURE 1234567	EFF CODE	UNITS PER ASSY
-040D	D2549030401065		. . WALL-SIDE NP used on 001D SEE 25-41-51-480 FOR DET		001
-040E	D2549030406665		. . WALL-SIDE NP used on 001E, 001T, 001V SEE 25-41-51-48C FOR DET		001
-040F	D2549020401265		. . WALL-SIDE NP used on 001F SEE 25-41-51-48D FOR DET		001
-040G	D2549020807265		. . WALL-SIDE NP used on 001G SEE 25-41-51-48D FOR DET		001
-040H	D2549020402665		. . WALL-SIDE NP PRE VSB A2-254-25-042 used on 001H SEE 25-41-51-48D FOR DET		001
-040J	D2549020403465		. . WALL-SIDE NP used on 001J, 001S, 001W SEE 25-41-51-48G FOR DET		001
-040K	D2549030409065		. . WALL-SIDE NP used on 001K, 001L, 001Q, 001R SEE 25-41-51-48D FOR DET		001
-040L	D2549010610665		. . WALL-SIDE NP used on 001M, 001U SEE 25-41-51-48G FOR DET		001
-040M	D2547161901865		. . WALL-SIDE NP used on 001N SEE 25-41-51-48D FOR DET		001

- ITEM NOT ILLUSTRATED

FIG. ITEM	PART NUMBER	AIRLINE STOCK NUMBER	NOMENCLATURE 1234567	EFF CODE	UNITS PER ASSY
-040N	R22540119601865		. . WALL-SIDE NP PRE VSB A2-254-25-130 POST VSB A2-254-25-042 used on 001P SEE 25-41-51-48D FOR DET		001
-040P	R22540119606465		. . WALL-SIDE NP POST VSB A2-254-25-130 used on 001X SEE 25-41-51-48D FOR DET		001
050A	D2549020805266		. . HOUSING NP used on 001A SEE 25-41-51-07V FOR DET		001
-050B	D2549010400466		. . HOUSING NP used on 001B SEE 25-41-51-07T FOR DET		001
-050C	D2549020805466		. . HOUSING NP used on 001C SEE 25-41-51-07T FOR DET		001
-050D	D2549030406466		. . HOUSING NP used on 001D SEE 25-41-51-07T FOR DET		001
-050E	D2549030406666		. . HOUSING NP used on 001E, 001T, 001V SEE 25-41-51-07V FOR DET		001
-050F	D2549020401266		. . HOUSING NP used on 001F SEE 25-41-51-07W FOR DET		001
-050G	D2549020807266		. . HOUSING NP used on 001G SEE 25-41-51-07W FOR DET		001

- ITEM NOT ILLUSTRATED

FIG. ITEM	PART NUMBER	AIRLINE STOCK NUMBER	NOMENCLATURE 1234567		EFF CODE	UNITS PER ASSY
-050H	D2549020402666		. . HOUSING PRE VSB A2-254-25-130 used on 001H, 001P SEE 25-41-51-07W FOR DET	NP		001
-050J	D2549020403466		. . HOUSING used on 001J, 001S, 001W SEE 25-41-51-07W FOR DET	NP		001
-050K	D2549030409066		. . HOUSING used on 001K, 001Q SEE 25-41-51-07X FOR DET	NP		001
-050L	D2549020403066		. . HOUSING used on 001L, 001R SEE 25-41-51-07X FOR DET	NP		001
-050M	D2549010403266		. . HOUSING used on 001M, 001U SEE 25-41-51-07Z FOR DET	NP		001
-050N	D2547161901866		. . HOUSING used on 001N SEE 25-41-51-07W FOR DET	NP		001
-050P	R22540119606466		. . HOUSING POST VSB A2-254-25-130 used on 001X SEE 25-41-51-07W FOR DET	NP		001
060A	D2549010500069		. . DOOR INSTL used on 001A, 001B, 001C, 001D, 001E, 001T, 001V SEE 25-41-51-100 FOR DET	NP		001
-060B	D2549020401269		. . DOOR INSTL used on 001F, 001G, 001H, 001J, 001K, 001L, 001M, 001N, 001P, 001Q, 001R, 001S, 001U, 001W, 001X SEE 25-41-51-10A FOR DET	NP		001

- ITEM NOT ILLUSTRATED

FIG. ITEM	PART NUMBER	AIRLINE STOCK NUMBER	NOMENCLATURE 1234567	EFF CODE	UNITS PER ASSY
070A	A225400278-518		. . DOOR ASSY-SINGLE used on 001A SEE 25-41-51-11K FOR DET		001
-070B	A225400276-942		. . DOOR ASSY-SINGLE used on 001B SEE 25-41-51-11F FOR DET		001
-070C	A225400278-524		. . DOOR ASSY-SINGLE used on 001C SEE 25-41-51-11K FOR DET		001
-070D	A225400276-588		. . DOOR ASSY-SINGLE used on 001D, 001F SEE 25-41-51-11F FOR DET		001
-070E	A225400276-576		. . DOOR ASSY-SINGLE used on 001E, 001J, 001S, 001T, 001V, 001W SEE 25-41-51-11E FOR DET		001
-070F	A225400276-574		. . DOOR ASSY-SINGLE used on 001G, 001N SEE 25-41-51-11E FOR DET		001
-070G	A225400276-952		. . DOOR ASSY-SINGLE PRE VSB A2-254-25-130 used on 001H, 001P SEE 25-41-51-11G FOR DET		001
-070H	A225400276-570		. . DOOR ASSY-SINGLE used on 001K, 001L, 001Q, 001R SEE 25-41-51-11E FOR DET		001
-070J	A225400276-924		. . DOOR ASSY-SINGLE used on 001M, 001U SEE 25-41-51-11E FOR DET		001

- ITEM NOT ILLUSTRATED

FIG. ITEM	PART NUMBER	AIRLINE STOCK NUMBER	NOMENCLATURE 1234567	EFF CODE	UNITS PER ASSY
-070K	A225400263-990		. . DOOR ASSY-SINGLE POST VSB A2-254-25-130 used on 001X SEE 25-41-51-11G FOR DET		001
080A	D2549020510671		. . TOILET UNIT AND TOILET SHROUD NP used on 001A SEE 25-41-51-12E FOR DET		001
-080B	D2549020514671		. . TOILET UNIT AND TOILET SHROUD NP used on 001B SEE 25-41-51-12E FOR DET		001
-080C	D2549010607071		. . TOILET UNIT AND TOILET SHROUD NP used on 001C, 001D, 001E, 001T, 001V SEE 25-41-51-12D FOR DET		001
-080D	D2549020811871		. . TOILET UNIT AND TOILET SHROUD NP PRE VSB A2-254-25-130 used on 001F, 001G, 001H, 001J, 001N, 001P, 001S, 001W SEE 25-41-51-12G FOR DET		001
-080E	D2549030409071		. . TOILET UNIT AND TOILET SHROUD NP used on 001K, 001L, 001Q, 001R SEE 25-41-51-12G FOR DET		001
-080F	D2549010610671		. . TOILET UNIT AND TOILET SHROUD NP used on 001M, 001U SEE 25-41-51-12G FOR DET		001

- ITEM NOT ILLUSTRATED

FIG. ITEM	PART NUMBER	AIRLINE STOCK NUMBER	NOMENCLATURE 1234567		EFF CODE	UNITS PER ASSY
-080G	R22540119605871		. . TOILET UNIT AND TOILET SHROUD POST VSB A2-254-25-130 used on 001X SEE 25-41-51-12G FOR DET	NP		001
090A	D2549020805272		. . PAN-FLOOR used on 001A SEE 25-41-51-13M FOR DET	NP		001
-090B	D2549020813672		. . PAN-FLOOR used on 001B SEE 25-41-51-13L FOR DET	NP		001
-090C	D2549020805472		. . PAN-FLOOR used on 001C SEE 25-41-51-13K FOR DET	NP		001
-090D	D2549030401072		. . PAN-FLOOR used on 001D SEE 25-41-51-13J FOR DET	NP		001
-090E	D2549030404272		. . PAN-FLOOR used on 001E, 001T, 001V SEE 25-41-51-13J FOR DET	NP		001
-090F	D2549020401272		. . PAN-FLOOR used on 001F SEE 25-41-51-13N FOR DET	NP		001
-090G	D2549020807272		. . PAN-FLOOR used on 001G, 001N SEE 25-41-51-13N FOR DET	NP		001
-090H	D2549020402672		. . PAN-FLOOR PRE VSB A2-254-25-130 used on 001H, 001P SEE 25-41-51-13N FOR DET	NP		001

- ITEM NOT ILLUSTRATED

FIG. ITEM	PART NUMBER	AIRLINE STOCK NUMBER	NOMENCLATURE 1234567		EFF CODE	UNITS PER ASSY
-090J	D2549030409672		. . PAN-FLOOR used on 001J, 001S, 001W SEE 25-41-51-13N FOR DET	NP		001
-090K	D2549030409072		. . PAN-FLOOR used on 001K, 001L, 001Q, 001R SEE 25-41-51-13N FOR DET	NP		001
-090L	D2549010610672		. . PAN-FLOOR used on 001M, 001U SEE 25-41-51-13P FOR DET	NP		001
-090M	R22540119606472		. . PAN-FLOOR POST VSB A2-254-25-130 used on 001X SEE 25-41-51-13N FOR DET	NP		001
100A	D2549020710073		. . LIGHT-DOOR used on 001A SEE 25-41-51-14A FOR DET	NP		001
-100B	D2549010512673		. . LIGHT-DOOR PRE VSB A2-254-25-130 used on 001B, 001C, 001D, 001E, 001F, 001G, 001H, 001J, 001M, 001N, 001P, 001S, 001T, 001U, 001V, 001W SEE 25-41-51-140 FOR DET	NP		001
-100C	D2549020613673		. . LIGHT-DOOR used on 001K, 001L, 001Q, 001R SEE 25-41-51-140 FOR DET	NP		001
-100D	R22540119604673		. . LIGHT-DOOR POST VSB A2-254-25-130 used on 001X SEE 25-41-51-14C FOR DET	NP		001
110A	D2549030514674		. . WASHBASIN UNIT used on 001A, 001B SEE 25-41-51-15G FOR DET	NP		001

- ITEM NOT ILLUSTRATED

FIG. ITEM	PART NUMBER	AIRLINE STOCK NUMBER	NOMENCLATURE 1234567	EFF CODE	UNITS PER ASSY
-110B	D2549010603274		. . WASHBASIN UNIT NP used on 001C, 001M, 001U SEE 25-41-51-15F FOR DET		001
-110C	D2549020614474		. . WASHBASIN UNIT NP used on 001D SEE 25-41-51-15F FOR DET		001
-110D	D2549020710274		. . WASHBASIN UNIT NP used on 001E, 001T, 001V SEE 25-41-51-15H FOR DET		001
-110E	D2549020401274		. . WASHBASIN UNIT NP used on 001F SEE 25-41-51-15L FOR DET		001
-110F	D2549020807274		. . WASHBASIN UNIT NP used on 001G, 001N SEE 25-41-51-15L FOR DET		001
-110G	D2549020402674		. . WASHBASIN UNIT NP PRE VSB A2-254-25-130 used on 001H, 001P SEE 25-41-51-15L FOR DET		001
-110H	D2549020403474		. . WASHBASIN UNIT NP used on 001J, 001S, 001W SEE 25-41-51-15L FOR DET		001
-110J	D2549030410274		. . WASHBASIN UNIT NP used on 001K, 001L, 001Q, 001R SEE 25-41-51-15L FOR DET		001
-110K	R22540119606474		. . WASHBASIN UNIT NP POST VSB A2-254-25-130 used on 001X SEE 25-41-51-15L FOR DET		001

- ITEM NOT ILLUSTRATED

FIG. ITEM	PART NUMBER	AIRLINE STOCK NUMBER	NOMENCLATURE 1234567	EFF CODE	UNITS PER ASSY
120A	D2549020510675		. . DOOR ASSY-WASHBASIN UNIT NP used on 001A SEE 25-41-51-16D FOR DET		001
-120B	D2549020607675		. . DOOR ASSY-WASHBASIN UNIT NP used on 001B SEE 25-41-51-16C FOR DET		001
-120C	D2549020607075		. . DOOR ASSY-WASHBASIN UNIT NP used on 001C, 001J, 001S, 001W SEE 25-41-51-16B FOR DET		001
-120D	D2549030606075		. . DOOR ASSY-WASHBASIN UNIT NP PRE VSB A2-254-25-130 used on 001D, 001E, 001F, 001G, 001H, 001N, 001P, 001T, 001V SEE 25-41-51-16E FOR DET		001
-120E	D2549030505475		. . DOOR ASSY-WASHBASIN UNIT NP used on 001K, 001L, 001Q, 001R SEE 25-41-51-16B FOR DET		001
-120F	D2549010510475		. . DOOR ASSY-WASHBASIN UNIT NP used on 001M, 001U SEE 25-41-51-16B FOR DET		001
-120G	R22540119606275		. . DOOR ASSY-WASHBASIN UNIT NP POST VSB A2-254-25-130 used on 001X SEE 25-41-51-16E FOR DET		001

- ITEM NOT ILLUSTRATED

FIG. ITEM	PART NUMBER	AIRLINE STOCK NUMBER	NOMENCLATURE 1234567	EFF CODE	UNITS PER ASSY
130A	D2549020510676		. . PANEL ASSY-WASHBASIN UNIT NP used on 001A SEE 25-41-51-17D FOR DET		001
-130B	D2549020607676		. . PANEL ASSY-WASHBASIN UNIT NP used on 001B SEE 25-41-51-17C FOR DET		001
-130C	D2549030511076		. . PANEL ASSY-WASHBASIN UNIT NP used on 001C SEE 25-41-51-17D FOR DET		001
-130D	D2549030504876		. . PANEL ASSY-WASHBASIN UNIT NP PRE VSB A2-254-25-130 used on 001D, 001E, 001F, 001G, 001H, 001J, 001N, 001P, 001S, 001T, 001V, 001W SEE 25-41-51-17C FOR DET		001
-130E	D2549020506276		. . PANEL ASSY-WASHBASIN UNIT NP used on 001K, 001L, 001Q, 001R SEE 25-41-51-17C FOR DET		001
-130F	D2549010604876		. . PANEL ASSY-WASHBASIN UNIT NP used on 001M, 001U SEE 25-41-51-17D FOR DET		001
-130G	R22540119604676		. . PANEL ASSY-WASHBASIN UNIT NP POST VSB A2-254-25-130 used on 001X SEE 25-41-51-17C FOR DET		001

- ITEM NOT ILLUSTRATED

FIG. ITEM	PART NUMBER	AIRLINE STOCK NUMBER	NOMENCLATURE 1234567		EFF CODE	UNITS PER ASSY
140A	D2549010611677		. . BIN-WASTE,CHUTE-WASTE AND EXTINGUISHER-FIRE used on 001A, 001B, 001C, 001D, 001E, 001F, 001G, 001H, 001J, 001K, 001L, 001M, 001N, 001P, 001Q, 001R, 001S, 001T, 001U, 001V, 001W, 001X SEE 25-41-51-180 FOR DET	NP		001
150A	D2549020510678		. . CABINET-SERVICE used on 001A SEE 25-41-51-19F FOR DET	NP		001
-150B	D2549030504878		. . CABINET-SERVICE PRE VSB A2-254-25-042 used on 001B, 001C, 001E, 001G, 001H, 001J, 001N, 001S, 001T, 001V, 001W SEE 25-41-51-19E FOR DET	NP		001
-150C	D2549030505878		. . CABINET-SERVICE used on 001D, 001F SEE 25-41-51-19E FOR DET	NP		001
-150D	D2549020605678		. . CABINET-SERVICE used on 001K, 001L, 001Q, 001R SEE 25-41-51-19E FOR DET	NP		001
-150E	D2549030504078		. . CABINET-SERVICE used on 001M, 001U SEE 25-41-51-19E FOR DET	NP		001
-150F	R22540114200078		. . CABINET-SERVICE PRE VSB A2-254-25-130 POST VSB A2-254-25-042 used on 001P SEE 25-41-51-19E FOR DET	NP		001

- ITEM NOT ILLUSTRATED

FIG. ITEM	PART NUMBER	AIRLINE STOCK NUMBER	NOMENCLATURE 1234567		EFF CODE	UNITS PER ASSY
-150G	R22540119604678		. . CABINET-SERVICE POST VSB A2-254-25-130 used on 001X SEE 25-41-51-19E FOR DET	NP		001
160A	D2549020510679		. . TABLE-NURSING used on 001A SEE 25-41-51-20B FOR DET	NP		001
-160B	D2549010510679		. . TABLE-NURSING used on 001B, 001C, 001E, 001J, 001M, 001S, 001T, 001U, 001V, 001W SEE 25-41-51-20A FOR DET	NP		001
-160C	D2549010512679		. . TABLE-NURSING PRE VSB A2-254-25-130 used on 001D, 001F, 001G, 001H, 001N, 001P SEE 25-41-51-20A FOR DET	NP		001
-160D	D2549020613679		. . TABLE-NURSING used on 001K, 001L, 001Q, 001R SEE 25-41-51-20A FOR DET	NP		001
-160E	R22540119604679		. . TABLE-NURSING POST VSB A2-254-25-130 used on 001X SEE 25-41-51-20A FOR DET	NP		001
170A	D2549020510680		. . VENTILATION SYSTEM used on 001A SEE 25-41-51-21B FOR DET	NP		001
-170B	D2549020802680		. . VENTILATION SYSTEM PRE VSB A2-254-25-130 used on 001B, 001C, 001D, 001E, 001F, 001G, 001H, 001J, 001M, 001N, 001P, 001S, 001T, 001U, 001V, 001W SEE 25-41-51-21B FOR DET	NP		001

- ITEM NOT ILLUSTRATED

FIG. ITEM	PART NUMBER	AIRLINE STOCK NUMBER	NOMENCLATURE 1234567		EFF CODE	UNITS PER ASSY
-170C	D2549020801080		. . VENTILATION SYSTEM used on 001K, 001L, 001Q, 001R SEE 25-41-51-21B FOR DET	NP		001
-170D	R22540119605280		. . VENTILATION SYSTEM POST VSB A2-254-25-130 used on 001X SEE 25-41-51-21B FOR DET	NP		001
180A	D2549010606081		. . WATER SYSTEM-POTABLE used on 001A, 001B, 001D, 001E, 001T, 001V SEE 25-41-51-22D FOR DET	NP		001
-180B	D2549020805481		. . WATER SYSTEM-POTABLE used on 001C SEE 25-41-51-22H FOR DET	NP		001
-180C	D2549020401281		. . WATER SYSTEM-POTABLE used on 001F, 001G, 001H, 001J, 001N, 001P, 001S, 001W SEE 25-41-51-22D FOR DET	NP		001
-180D	D2549030410081		. . WATER SYSTEM-POTABLE used on 001K, 001L, 001Q, 001R SEE 25-41-51-22G FOR DET	NP		001
-180E	D2549010606481		. . WATER SYSTEM-POTABLE used on 001M, 001U SEE 25-41-51-22F FOR DET	NP		001
-180F	R22540119606481		. . WATER SYSTEM-POTABLE used on 001X SEE 25-41-51-22D FOR DET	NP		001
190A	D2549010511082		. . WATER SYSTEM-WASTE used on 001A, 001E, 001M, 001T, 001U, 001V SEE 25-41-51-23B FOR DET	NP		001

- ITEM NOT ILLUSTRATED

FIG. ITEM	PART NUMBER	AIRLINE STOCK NUMBER	NOMENCLATURE 1234567		EFF CODE	UNITS PER ASSY
-190B	D2549020800882		. . WATER SYSTEM-WASTE used on 001B, 001H, 001J, 001P, 001S, 001W, 001X SEE 25-41-51-23D FOR DET	NP		001
-190C	D2549030405082		. . WATER SYSTEM-WASTE used on 001C SEE 25-41-51-23B FOR DET	NP		001
-190D	D2549030504882		. . WATER SYSTEM-WASTE used on 001D, 001F, 001G, 001N SEE 25-41-51-23B FOR DET	NP		001
-190E	D2549030402082		. . WATER SYSTEM-WASTE used on 001K, 001L, 001Q, 001R SEE 25-41-51-23B FOR DET	NP		001
200A	D2549020513083		. . ELECTRICAL SYSTEM used on 001A, 001E, 001T, 001V SEE 25-41-51-26M FOR DET	NP		001
-200B	D2549020810283		. . ELECTRICAL SYSTEM used on 001B SEE 25-41-51-26P FOR DET	NP		001
-200C	D2549020510483		. . ELECTRICAL SYSTEM used on 001C SEE 25-41-51-26N FOR DET	NP		001
-200D	D2549030404483		. . ELECTRICAL SYSTEM used on 001D SEE 25-41-51-26P FOR DET	NP		001
-200E	D2549020401283		. . ELECTRICAL SYSTEM used on 001F SEE 25-41-51-26R FOR DET	NP		001

- ITEM NOT ILLUSTRATED

FIG. ITEM	PART NUMBER	AIRLINE STOCK NUMBER	NOMENCLATURE 1234567		EFF CODE	UNITS PER ASSY
-200F	D2549030410283		. . ELECTRICAL SYSTEM PRE VSB A2-254-25-130 used on 001G, 001H, 001J, 001N, 001P, 001S, 001W SEE 25-41-51-26R FOR DET	NP		001
-200G	D2549010610683		. . ELECTRICAL SYSTEM used on 001M, 001U SEE 25-41-51-26R FOR DET	NP		001
-200H	D2549030409083		. . ELECTRICAL SYSTEM used on 001K, 001L, 001Q, 001R SEE 25-41-51-26R FOR DET	NP		001
-200J	R22540119606483		. . ELECTRICAL SYSTEM POST VSB A2-254-25-130 used on 001X SEE 25-41-51-26R FOR DET	NP		001
210A	D9250000000185		. . ELECTRICAL SYSTEM- COCKPIT DOOR LOCKING used on 001A, 001B, 001C, 001D, 001E, 001T, 001V SEE 25-41-51-31A FOR DET	NP		001
-210B	D9250000000285		. . ELECTRICAL SYSTEM- COCKPIT DOOR LOCKING used on 001F, 001G, 001H, 001J, 001K, 001L, 001M, 001N, 001P, 001Q, 001R, 001S, 001U, 001W, 001X SEE 25-41-51-31B FOR DET	NP		001

- ITEM NOT ILLUSTRATED

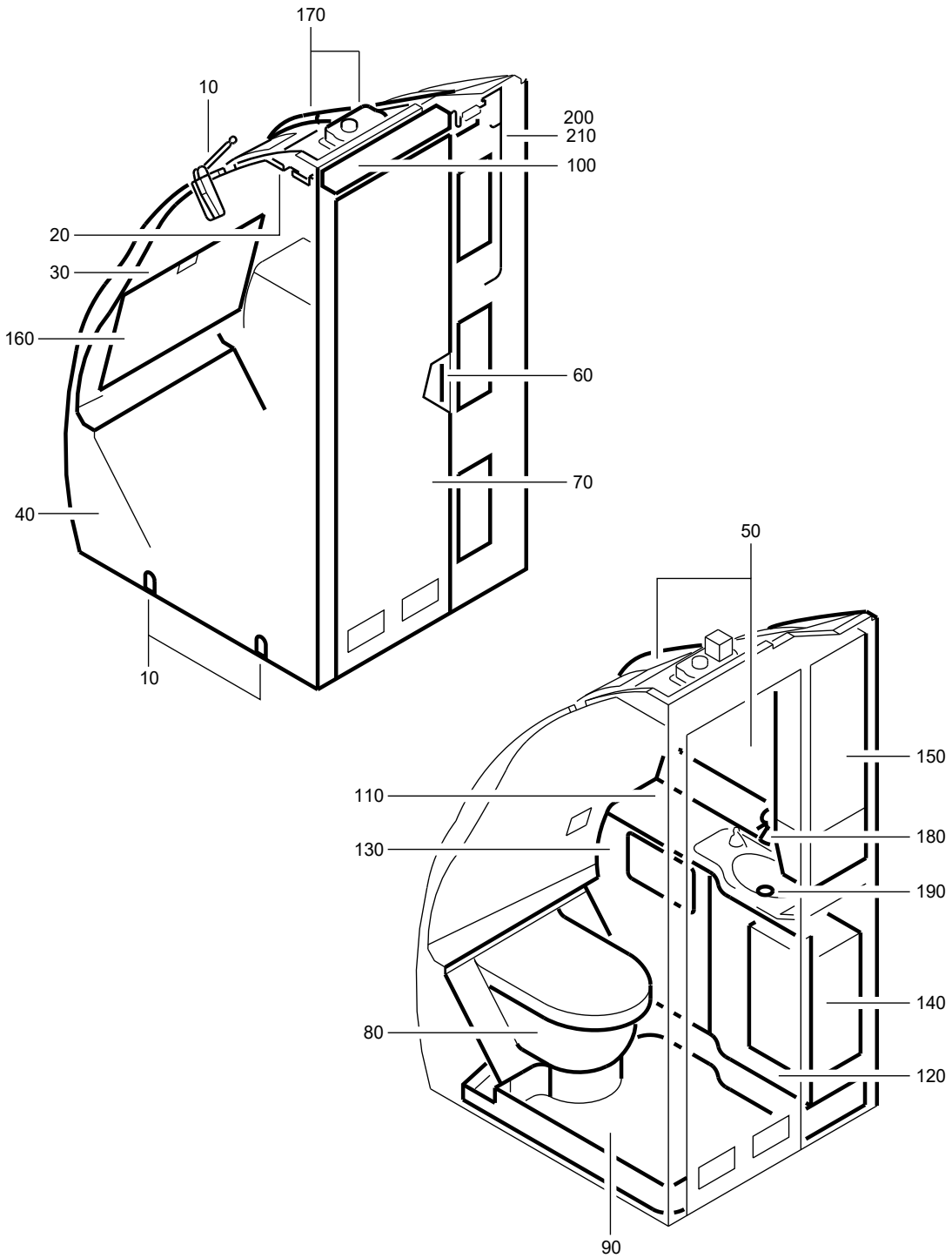

F_PL_254151_42_F_01_00

LAVATORY A ASSY
Figure 42F/EN254151SHEET42F01

FIG. ITEM	PART NUMBER	AIRLINE STOCK NUMBER	NOMENCLATURE 1234567	EFF CODE	UNITS PER ASSY
42F					
-001A	D2549020405000		. LAVATORY A ASSY SEE SIL 25-117 FOR DET		RF
-001B	D2549020404400		. LAVATORY A ASSY SEE SIL 25-117 FOR DET		RF
-001C	D2549020513800		. LAVATORY A ASSY SEE SIL 25-117 FOR DET		RF
-001D	D2549020404200		. LAVATORY A ASSY SEE SIL 25-117 FOR DET		RF
-001E	D2549020405200		. LAVATORY A ASSY SEE SIL 25-117 FOR DET		RF
-001F	D2549020405800		. LAVATORY A ASSY SEE SIL 25-117 FOR DET		RF
-001G	D2549010402800		. LAVATORY A ASSY SEE SIL 25-117 FOR DET		RF
-001H	D2549010403000		. LAVATORY A ASSY SEE SIL 25-117 FOR DET		RF
-001J	D2549020404800		. LAVATORY A ASSY POST SB 25-1314 SEE SIL 25-117 FOR DET		RF
-001K	D2549030410200		. LAVATORY A ASSY PRE VSB A2-254-25-072 SEE SIL 25-117 FOR DET		RF
-001L	D2549020404000		. LAVATORY A ASSY SEE SIL 25-117 FOR DET		RF
-001M	D2549030410000		. LAVATORY A ASSY SEE SIL 25-117 FOR DET		RF

- ITEM NOT ILLUSTRATED

FIG. ITEM	PART NUMBER	AIRLINE STOCK NUMBER	NOMENCLATURE 1234567		EFF CODE	UNITS PER ASSY
-001N	R225401675-000		. LAVATORY A ASSY POST VSB A2-254-25-072 SEE SIL 25-117 FOR DET			RF
010A	D2549030608061		. . ATTACHMENT-LAVATORY used on 001A, 001B SEE 25-41-51-02C FOR DET	NP		001
-010B	D2549010613861		. . ATTACHMENT-LAVATORY used on 001C, 001D, 001E, 001F, 001G, 001H, 001J, 001L, 001M SEE 25-41-51-02C FOR DET	NP		001
-010C	D2549030410261		. . ATTACHMENT-LAVATORY used on 001K, 001N SEE 25-41-51-02C FOR DET	NP		001
020A	D2549030401463		. . PANEL-CEILING used on 001A, 001B, 001C, 001D, 001E, 001F, 001G, 001H, 001J, 001L, 001M SEE 25-41-51-040 FOR DET	NP		001
-020B	D2549030410263		. . PANEL-CEILING used on 001K, 001N SEE 25-41-51-04A FOR DET	NP		001
030A	D2549020805464		. . WALL-REAR used on 001A, 001B, 001C, 001E, 001F, 001G, 001H, 001J, 001L, 001M SEE 25-41-51-05H FOR DET	NP		001
-030B	D2549020812264		. . WALL-REAR used on 001D SEE 25-41-51-05H FOR DET	NP		001
-030C	D2549030410264		. . WALL-REAR used on 001K, 001N SEE 25-41-51-05F FOR DET	NP		001

- ITEM NOT ILLUSTRATED

FIG. ITEM	PART NUMBER	AIRLINE STOCK NUMBER	NOMENCLATURE 1234567	EFF CODE	UNITS PER ASSY
040A	D2549020809865		. . WALL-SIDE NP used on 001A, 001J SEE 25-41-51-06R FOR DET		001
-040B	D2549020811665		. . WALL-SIDE NP used on 001B SEE 25-41-51-48B FOR DET		001
-040C	D2549020513865		. . WALL-SIDE NP used on 001C SEE 25-41-51-48B FOR DET		001
-040D	D2549020804065		. . WALL-SIDE NP used on 001D SEE 25-41-51-06Z FOR DET		001
-040E	D2549020812065		. . WALL-SIDE NP used on 001E SEE 25-41-51-48B FOR DET		001
-040F	D2549020813065		. . WALL-SIDE NP used on 001F SEE 25-41-51-48B FOR DET		001
-040G	D2549010402865		. . WALL-SIDE NP used on 001G SEE 25-41-51-48C FOR DET		001
-040H	D2549010613065		. . WALL-SIDE NP used on 001H SEE 25-41-51-480 FOR DET		001
-040J	D2549030410265		. . WALL-SIDE NP PRE VSB A2-254-25-072 used on 001K SEE 25-41-51-48F FOR DET		001
-040K	D2549020404065		. . WALL-SIDE NP used on 001L SEE 25-41-51-48C FOR DET		001

- ITEM NOT ILLUSTRATED

FIG. ITEM	PART NUMBER	AIRLINE STOCK NUMBER	NOMENCLATURE 1234567	EFF CODE	UNITS PER ASSY
-040L	D2549030410065		. . WALL-SIDE NP used on 001M SEE 25-41-51-48G FOR DET		001
-040M	R22540167500065		. . WALL-SIDE NP POST VSB A2-254-25-072 used on 001N SEE 25-41-51-48F FOR DET		001
050A	D2549020814266		. . HOUSING NP used on 001A, 001J SEE 25-41-51-07T FOR DET		001
-050B	D2549010400266		. . HOUSING NP used on 001B SEE 25-41-51-07U FOR DET		001
-050C	D2549020513866		. . HOUSING NP used on 001C SEE 25-41-51-07V FOR DET		001
-050D	D2549030406866		. . HOUSING NP used on 001D SEE 25-41-51-07T FOR DET		001
-050E	D2549020812066		. . HOUSING NP used on 001E SEE 25-41-51-07Q FOR DET		001
-050F	D2549020813066		. . HOUSING NP used on 001F SEE 25-41-51-07U FOR DET		001
-050G	D2549010400466		. . HOUSING NP used on 001H SEE 25-41-51-07T FOR DET		001
-050H	D2549030410266		. . HOUSING NP used on 001K, 001N SEE 25-41-51-07W FOR DET		001

- ITEM NOT ILLUSTRATED

FIG. ITEM	PART NUMBER	AIRLINE STOCK NUMBER	NOMENCLATURE 1234567		EFF CODE	UNITS PER ASSY
-050J	D2549020404066		. . HOUSING used on 001L SEE 25-41-51-07W FOR DET	NP		001
-050K	D2549030410066		. . HOUSING used on 001M SEE 25-41-51-07W FOR DET	NP		001
-050L	D2549010613666		. . HOUSING used on 001G SEE 25-41-51-49B FOR DET	NP		001
060A	D2549010500069		. . DOOR INSTL used on 001A, 001B, 001C, 001D, 001E, 001F, 001H, 001J SEE 25-41-51-100 FOR DET	NP		001
-060B	D2549020401269		. . DOOR INSTL used on 001G, 001K, 001L, 001M, 001N SEE 25-41-51-10A FOR DET	NP		001
070A	A225400278-806		. . DOOR ASSY-SINGLE used on 001A, 001J SEE 25-41-51-11H FOR DET			001
-070B	A225400278-900		. . DOOR ASSY-SINGLE used on 001B SEE 25-41-51-11K FOR DET			001
-070C	A225400278-826		. . DOOR ASSY-SINGLE used on 001C SEE 25-41-51-11M FOR DET			001
-070D	A225400278-800		. . DOOR ASSY-SINGLE used on 001D SEE 25-41-51-11H FOR DET			001
-070E	A225400278-818		. . DOOR ASSY-SINGLE used on 001E SEE 25-41-51-11K FOR DET			001

- ITEM NOT ILLUSTRATED

FIG. ITEM	PART NUMBER	AIRLINE STOCK NUMBER	NOMENCLATURE 1234567		EFF CODE	UNITS PER ASSY
-070F	A225400278-516		. . DOOR ASSY-SINGLE used on 001F SEE 25-41-51-11K FOR DET			001
-070G	A2254002768942		. . DOOR ASSY-SINGLE used on 001G SEE 25-41-51-11F FOR DET			001
-070H	A225400278-510		. . DOOR ASSY-SINGLE used on 001H SEE 25-41-51-11H FOR DET			001
-070J	A225400278-540		. . DOOR ASSY-SINGLE used on 001K, 001N SEE 25-41-51-11M FOR DET			001
-070K	A225400276-502		. . DOOR ASSY-SINGLE used on 001L SEE 25-41-51-11B FOR DET			001
-070L	A225400278-538		. . DOOR ASSY-SINGLE used on 001M SEE 25-41-51-11M FOR DET			001
080A	D2549020514871		. . TOILET UNIT AND TOILET SHROUD used on 001A, 001J SEE 25-41-51-12E FOR DET	NP		001
-080B	D2549020512271		. . TOILET UNIT AND TOILET SHROUD used on 001B SEE 25-41-51-12D FOR DET	NP		001
-080C	D2549010607071		. . TOILET UNIT AND TOILET SHROUD used on 001C, 001D, 001F, 001H SEE 25-41-51-12D FOR DET	NP		001

- ITEM NOT ILLUSTRATED

FIG. ITEM	PART NUMBER	AIRLINE STOCK NUMBER	NOMENCLATURE 1234567		EFF CODE	UNITS PER ASSY
-080D	D2549020514671		. . TOILET UNIT AND TOILET SHROUD used on 001E, 001G SEE 25-41-51-12E FOR DET	NP		001
-080E	D2549020811871		. . TOILET UNIT AND TOILET SHROUD used on 001K, 001L, 001N SEE 25-41-51-12G FOR DET	NP		001
-080F	D2549030410071		. . TOILET UNIT AND TOILET SHROUD used on 001M SEE 25-41-51-12G FOR DET	NP		001
090A	D2549020814272		. . PAN-FLOOR used on 001A SEE 25-41-51-13J FOR DET	NP		001
-090B	D2549020811672		. . PAN-FLOOR used on 001B SEE 25-41-51-13K FOR DET	NP		001
-090C	D2549020812072		. . PAN-FLOOR used on 001C, 001E SEE 25-41-51-13K FOR DET	NP		001
-090D	D2549030400672		. . PAN-FLOOR used on 001D SEE 25-41-51-13K FOR DET	NP		001
-090E	D2549020813072		. . PAN-FLOOR used on 001F SEE 25-41-51-13L FOR DET	NP		001
-090F	D2549010514272		. . PAN-FLOOR used on 001G SEE 25-41-51-13T FOR DET	NP		001

- ITEM NOT ILLUSTRATED

FIG. ITEM	PART NUMBER	AIRLINE STOCK NUMBER	NOMENCLATURE 1234567		EFF CODE	UNITS PER ASSY
-090G	D2549030404272		. . PAN-FLOOR used on 001H SEE 25-41-51-13J FOR DET	NP		001
-090H	D2549030410272		. . PAN-FLOOR used on 001K, 001N SEE 25-41-51-13N FOR DET	NP		001
-090J	D2549020404072		. . PAN-FLOOR used on 001L SEE 25-41-51-13N FOR DET	NP		001
-090K	D2549030410072		. . PAN-FLOOR used on 001M SEE 25-41-51-13N FOR DET	NP		001
-090L	D2549030602472		. . PAN-FLOOR used on 001J SEE 25-41-51-13T FOR DET	NP		001
100A	D2549010512673		. . LIGHT-DOOR used on 001A, 001B, 001C, 001D, 001E, 001F, 001G, 001H, 001J, 001L, 001M SEE 25-41-51-140 FOR DET	NP		001
-100B	D2549020612273		. . LIGHT-DOOR used on 001K, 001N SEE 25-41-51-14A FOR DET	NP		001
110A	D2549020700674		. . WASHBASIN UNIT used on 001A, 001F SEE 25-41-51-15G FOR DET	NP		001
-110B	D2549020706674		. . WASHBASIN UNIT used on 001B, 001E SEE 25-41-51-15D FOR DET	NP		001
-110C	D2549010610074		. . WASHBASIN UNIT used on 001C, 001H SEE 25-41-51-15H FOR DET	NP		001

- ITEM NOT ILLUSTRATED

FIG. ITEM	PART NUMBER	AIRLINE STOCK NUMBER	NOMENCLATURE 1234567		EFF CODE	UNITS PER ASSY
-110D	D2549030514674		. . WASHBASIN UNIT used on 001D SEE 25-41-51-15G FOR DET	NP		001
-110E	D2549020403874		. . WASHBASIN UNIT used on 001G SEE 25-41-51-15K FOR DET	NP		001
-110F	D2549020808274		. . WASHBASIN UNIT used on 001J SEE 25-41-51-15H FOR DET	NP		001
-110G	D2549030410274		. . WASHBASIN UNIT used on 001K, 001N SEE 25-41-51-15L FOR DET	NP		001
-110H	D2549020404074		. . WASHBASIN UNIT used on 001L SEE 25-41-51-15L FOR DET	NP		001
-110J	D2549030410074		. . WASHBASIN UNIT used on 001M SEE 25-41-51-15L FOR DET	NP		001
120A	D2549030606075		. . DOOR ASSY-WASHBASIN UNIT used on 001A, 001F, 001H, 001J, 001K, 001L, 001N SEE 25-41-51-16E FOR DET	NP		001
-120B	D2549010603675		. . DOOR ASSY-WASHBASIN UNIT used on 001B SEE 25-41-51-16C FOR DET	NP		001
-120C	D2549020607075		. . DOOR ASSY-WASHBASIN UNIT used on 001C, 001D SEE 25-41-51-16B FOR DET	NP		001

- ITEM NOT ILLUSTRATED

FIG. ITEM	PART NUMBER	AIRLINE STOCK NUMBER	NOMENCLATURE 1234567		EFF CODE	UNITS PER ASSY
-120D	D2549020607675		. . DOOR ASSY-WASHBASIN UNIT used on 001E, 001G, 001M SEE 25-41-51-16C FOR DET	NP		001
130A	D2549030504876		. . PANEL ASSY-WASHBASIN UNIT used on 001A, 001C, 001D, 001F, 001H, 001J, 001K, 001L, 001N SEE 25-41-51-17C FOR DET	NP		001
-130B	D2549010603676		. . PANEL ASSY-WASHBASIN UNIT used on 001B SEE 25-41-51-17D FOR DET	NP		001
-130C	D2549020607676		. . PANEL ASSY-WASHBASIN UNIT used on 001E, 001G, 001M SEE 25-41-51-17C FOR DET	NP		001
140A	D2549010611677		. . BIN-WASTE,CHUTE-WASTE AND EXTINGUISHER-FIRE used on 001A, 001B, 001C, 001D, 001E, 001F, 001G, 001H, 001J, 001K, 001L, 001M, 001N SEE 25-41-51-180 FOR DET	NP		001
150A	D2549030504878		. . CABINET-SERVICE used on 001A, 001B, 001C, 001F, 001G, 001J, 001M SEE 25-41-51-19E FOR DET	NP		001
-150B	D2549030504078		. . CABINET-SERVICE used on 001D, 001E SEE 25-41-51-19E FOR DET	NP		001
-150C	D2549030505278		. . CABINET-SERVICE used on 001H SEE 25-41-51-19E FOR DET	NP		001

- ITEM NOT ILLUSTRATED

FIG. ITEM	PART NUMBER	AIRLINE STOCK NUMBER	NOMENCLATURE 1234567		EFF CODE	UNITS PER ASSY
-150D	D2549030410278		. . CABINET-SERVICE PRE VSB A2-254-25-072 used on 001K SEE 25-41-51-19H FOR DET	NP		001
-150E	D2549020400078		. . CABINET-SERVICE used on 001L SEE 25-41-51-19H FOR DET	NP		001
-150F	R22540167500078		. . CABINET-SERVICE POST VSB A2-254-25-072 used on 001N SEE 25-41-51-19H FOR DET	NP		001
160A	D2549010510679		. . TABLE-NURSING used on 001A, 001B, 001C, 001D, 001E, 001F, 001G, 001J, 001L, 001M SEE 25-41-51-20A FOR DET	NP		001
-160B	D2549010512679		. . TABLE-NURSING used on 001H SEE 25-41-51-20A FOR DET	NP		001
-160C	D2549030614679		. . TABLE-NURSING used on 001K, 001N SEE 25-41-51-20B FOR DET	NP		001
170A	D2549020802680		. . VENTILATION SYSTEM used on 001A, 001B, 001C, 001D, 001E, 001F, 001G, 001H, 001J, 001L, 001M SEE 25-41-51-21B FOR DET	NP		001
-170B	D2549030614680		. . VENTILATION SYSTEM used on 001K, 001N SEE 25-41-51-21B FOR DET	NP		001

- ITEM NOT ILLUSTRATED

FIG. ITEM	PART NUMBER	AIRLINE STOCK NUMBER	NOMENCLATURE 1234567	EFF CODE	UNITS PER ASSY
180A	D2549010606081		. . WATER SYSTEM-POTABLE NP used on 001A, 001B, 001C, 001E, 001G, 001H, 001J SEE 25-41-51-22D FOR DET		001
-180B	D2549030402081		. . WATER SYSTEM-POTABLE NP used on 001D, 001F SEE 25-41-51-22G FOR DET		001
-180C	D2549020401281		. . WATER SYSTEM-POTABLE NP used on 001K, 001L, 001N SEE 25-41-51-22D FOR DET		001
-180D	D2549030410081		. . WATER SYSTEM-POTABLE NP used on 001M SEE 25-41-51-22G FOR DET		001
190A	D2549010511082		. . WATER SYSTEM-WASTE NP used on 001A, 001B, 001E, 001G, 001J SEE 25-41-51-23B FOR DET		001
-190B	D2549030504882		. . WATER SYSTEM-WASTE NP used on 001C, 001H, 001K, 001L, 001N SEE 25-41-51-23B FOR DET		001
-190C	D2549030405082		. . WATER SYSTEM-WASTE NP used on 001D, 001F, 001M SEE 25-41-51-23B FOR DET		001
200A	D2549030408283		. . ELECTRICAL SYSTEM NP used on 001A, 001J SEE 25-41-51-26P FOR DET		001
-200B	D2549020404483		. . EQUIPMENT INSTL-Z120 NP used on 001B SEE 25-41-51-26P FOR DET		001

- ITEM NOT ILLUSTRATED

FIG. ITEM	PART NUMBER	AIRLINE STOCK NUMBER	NOMENCLATURE 1234567		EFF CODE	UNITS PER ASSY
-200C	D2549020810283		. . ELECTRICAL SYSTEM used on 001C, 001D, 001E, 001F, 001G, 001H SEE 25-41-51-26P FOR DET	NP		001
-200D	D2549030410283		. . ELECTRICAL SYSTEM used on 001K, 001L, 001M, 001N SEE 25-41-51-26R FOR DET	NP		001
210A	D9250000000185		. . ELECTRICAL SYSTEM-COCKPIT DOOR LOCKING used on 001A, 001B, 001C, 001D, 001E, 001F, 001G, 001H, 001J SEE 25-41-51-31A FOR DET	NP		001
-210B	D9250000000285		. . ELECTRICAL SYSTEM-COCKPIT DOOR LOCKING used on 001K, 001L, 001M, 001N SEE 25-41-51-31B FOR DET	NP		001

- ITEM NOT ILLUSTRATED

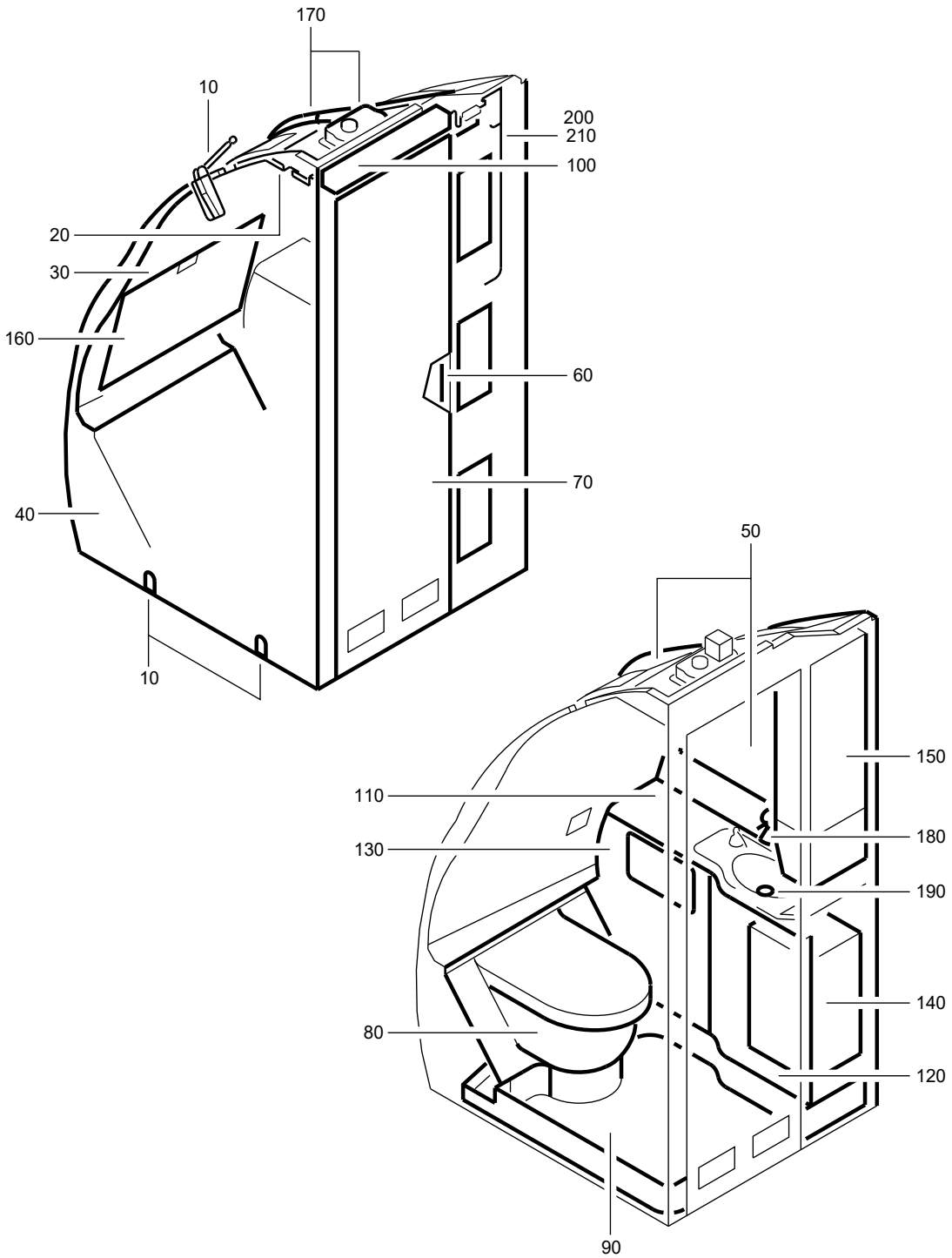

F_PL_254151_42_G_01_00

LAVATORY A ASSY
Figure 42G/EN254151SHEET42G01

FIG. ITEM	PART NUMBER	AIRLINE STOCK NUMBER	NOMENCLATURE 1234567	EFF CODE	UNITS PER ASSY
42G					
-001A	D2549020407600		. LAVATORY A ASSY PRE VSB A2-254-25-085 SEE SIL 25-117 FOR DET		RF
-001B	D2549030409600		. LAVATORY A ASSY SEE SIL 25-117 FOR DET		RF
-001C	D2549040500600		. LAVATORY A ASSY PRE VSB A2-254-25-080 SEE SIL 25-117 FOR DET		RF
-001D	D2549020400400		. LAVATORY A ASSY PRE VSB A2-254-25-054 SEE SIL 25-117 FOR DET		RF
-001E	D2549030410400		. LAVATORY A ASSY PRE VSB A2-254-25-106 SEE SIL 25-117 FOR DET		RF
-001F	D2549020400600		. LAVATORY A ASSY SEE SIL 25-117 FOR DET		RF
-001G	D2549020400800		. LAVATORY A ASSY SEE SIL 25-117 FOR DET		RF
-001H	D2549030408600		. LAVATORY A ASSY SEE SIL 25-117 FOR DET		RF
-001J	D2549020402200		. LAVATORY A ASSY SEE SIL 25-117 FOR DET		RF
-001K	D2549030407800		. LAVATORY A ASSY SEE SIL 25-117 FOR DET		RF
-001L	D2549020403200		. LAVATORY A ASSY SEE SIL 25-117 FOR DET		RF
-001M	D2549010401800		. LAVATORY A ASSY SEE SIL 25-117 FOR DET		RF

- ITEM NOT ILLUSTRATED

FIG. ITEM	PART NUMBER	AIRLINE STOCK NUMBER	NOMENCLATURE 1234567		EFF CODE	UNITS PER ASSY
-001N	R225401643-002		. LAVATORY A ASSY POST VSB A2-254-25-054 SEE SIL 25-117 FOR DET			RF
-001P	R225401673-000		. LAVATORY A ASSY POST VSB A2-254-25-080 SEE SIL 25-117 FOR DET			RF
-001Q	R225401683-000		. LAVATORY A ASSY POST VSB A2-254-25-085			RF
-001R	R225401662-002		. LAVATORY A ASSY POST VSB A2-254-25-106			RF
010A	D2549010613861		. . ATTACHMENT-LAVATORY PRE VSB A2-254-25-106 used on 001A, 001C, 001D, 001E, 001F, 001J, 001K, 001L, 001N, 001P, 001Q SEE 25-41-51-02C FOR DET	NP		001
-010B	D2549030410261		. . ATTACHMENT-LAVATORY used on 001B, 001H, 001M SEE 25-41-51-02C FOR DET	NP		001
-010C	D2549020400861		. . ATTACHMENT-LAVATORY used on 001G SEE 25-41-51-02B FOR DET	NP		001
-010D	R22540166200061		. . ATTACHMENT-LAVATORY POST VSB A2-254-25-106 used on 001R SEE 25-41-51-02C FOR DET	NP		001
020A	D2549030401463		. . PANEL-CEILING PRE VSB A2-254-25-106 used on 001A, 001D, 001E, 001F, 001G, 001J, 001K, 001L, 001N, 001Q SEE 25-41-51-040 FOR DET	NP		001

- ITEM NOT ILLUSTRATED

FIG. ITEM	PART NUMBER	AIRLINE STOCK NUMBER	NOMENCLATURE 1234567	EFF CODE	UNITS PER ASSY
-020B	D2549030409663		. . PANEL-CEILING NP used on 001B SEE 25-41-51-04A FOR DET		001
-020C	D2549040500663		. . PANEL-CEILING NP used on 001C, 001P SEE 25-41-51-04A FOR DET		001
-020D	D2549030410263		. . PANEL-CEILING NP used on 001H, 001M SEE 25-41-51-04A FOR DET		001
-020E	R22540166200063		. . PANEL-CEILING NP POST VSB A2-254-25-106 used on 001R SEE 25-41-51-040 FOR DET		001
030A	D2549030406464		. . WALL-REAR NP PRE VSB A2-254-25-106 used on 001A, 001E, 001G, 001L, 001Q SEE 25-41-51-05F FOR DET		001
-030B	D2549030409664		. . WALL-REAR NP used on 001B SEE 25-41-51-05H FOR DET		001
-030C	D2549020812264		. . WALL-REAR NP used on 001C, 001P SEE 25-41-51-05H FOR DET		001
-030D	D2549020807864		. . WALL-REAR NP used on 001D, 001N SEE 25-41-51-05H FOR DET		001
-030E	D2549020805464		. . WALL-REAR NP used on 001F, 001K SEE 25-41-51-05H FOR DET		001

- ITEM NOT ILLUSTRATED

FIG. ITEM	PART NUMBER	AIRLINE STOCK NUMBER	NOMENCLATURE 1234567		EFF CODE	UNITS PER ASSY
-030F	D2549010613264		. . WALL-REAR used on 001H, 001M SEE 25-41-51-05H FOR DET	NP		001
-030G	D2549010400864		. . WALL-REAR used on 001J SEE 25-41-51-05J FOR DET	NP		001
-030H	R22540166200064		. . WALL-REAR POST VSB A2-254-25-106 used on 001R SEE 25-41-51-05F FOR DET	NP		001
040A	D2549020407665		. . WALL-SIDE used on 001A, 001Q SEE 25-41-51-48D FOR DET	NP		001
-040B	D2549030409665		. . WALL-SIDE used on 001B SEE 25-41-51-48G FOR DET	NP		001
-040C	D2549040500665		. . WALL-SIDE PRE VSB A2-254-25-080 used on 001C SEE 25-41-51-48G FOR DET	NP		001
-040D	D2549020807665		. . WALL-SIDE PRE VSB A2-254-25-054 used on 001D SEE 25-41-51-06Z FOR DET	NP		001
-040E	D2549030408065		. . WALL-SIDE PRE VSB A2-254-25-106 used on 001E SEE 25-41-51-48B FOR DET	NP		001
-040F	D2549020404065		. . WALL-SIDE used on 001F SEE 25-41-51-48C FOR DET	NP		001

- ITEM NOT ILLUSTRATED

FIG. ITEM	PART NUMBER	AIRLINE STOCK NUMBER	NOMENCLATURE 1234567	EFF CODE	UNITS PER ASSY
-040G	D2549020400865		. . WALL-SIDE NP used on 001G SEE 25-41-51-48G FOR DET		001
-040H	D2549030408665		. . WALL-SIDE NP used on 001H SEE 25-41-51-48G FOR DET		001
-040J	D2549020402265		. . WALL-SIDE NP used on 001J SEE 25-41-51-48G FOR DET		001
-040K	D2549030409865		. . WALL-SIDE NP used on 001K SEE 25-41-51-48D FOR DET		001
-040L	D2549020403265		. . WALL-SIDE NP used on 001L SEE 25-41-51-48G FOR DET		001
-040M	D2549010401865		. . WALL-SIDE NP used on 001M SEE 25-41-51-48D FOR DET		001
-040N	R22540164300265		. . WALL-SIDE NP POST VSB A2-254-25-054 used on 001N SEE 25-41-51-06Z FOR DET		001
-040P	R22540167300065		. . WALL-SIDE NP POST VSB A2-254-25-080 used on 001P SEE 25-41-51-48G FOR DET		001
-040Q	R22540166200065		. . WALL-SIDE NP POST VSB A2-254-25-106 used on 001R SEE 25-41-51-48B FOR DET		001

- ITEM NOT ILLUSTRATED

FIG. ITEM	PART NUMBER	AIRLINE STOCK NUMBER	NOMENCLATURE 1234567	EFF CODE	UNITS PER ASSY
050A	D2549020407666		. . HOUSING NP used on 001A, 001Q SEE 25-41-51-49C FOR DET		001
-050B	D2549030409666		. . HOUSING NP used on 001B SEE 25-41-51-07W FOR DET		001
-050C	D2549040500666		. . HOUSING NP used on 001C, 001P SEE 25-41-51-07W FOR DET		001
-050D	D2549010400466		. . HOUSING NP used on 001D, 001K, 001N SEE 25-41-51-07T FOR DET		001
-050E	D2549030408066		. . HOUSING NP PRE VSB A2-254-25-106 used on 001E SEE 25-41-51-07U FOR DET		001
-050F	D2549020400666		. . HOUSING NP used on 001F SEE 25-41-51-07W FOR DET		001
-050G	D2549020400866		. . HOUSING NP used on 001G SEE 25-41-51-07W FOR DET		001
-050H	D2549030408666		. . HOUSING NP used on 001H SEE 25-41-51-07W FOR DET		001
-050J	D2549020402266		. . HOUSING NP used on 001J SEE 25-41-51-07X FOR DET		001
-050K	D2549010401866		. . HOUSING NP used on 001M SEE 25-41-51-07X FOR DET		001

- ITEM NOT ILLUSTRATED

FIG. ITEM	PART NUMBER	AIRLINE STOCK NUMBER	NOMENCLATURE 1234567		EFF CODE	UNITS PER ASSY
-050L	D2549020403266		. . HOUSING used on 001L SEE 25-41-51-07X FOR DET	NP		001
-050M	R22540166200066		. . HOUSING POST VSB A2-254-25-106 used on 001R SEE 25-41-51-07U FOR DET	NP		001
060A	D2549020401269		. . DOOR INSTL used on 001A, 001B, 001F, 001G, 001J, 001L, 001M, 001Q SEE 25-41-51-10A FOR DET	NP		001
-060B	D2549010500069		. . DOOR INSTL used on 001C, 001D, 001E, 001H, 001K, 001N, 001P, 001R SEE 25-41-51-100 FOR DET	NP		001
070A	A225400278-516		. . DOOR ASSY-SINGLE used on 001A, 001Q SEE 25-41-51-11K FOR DET			001
-070B	A225400278-536		. . DOOR ASSY-SINGLE used on 001B SEE 25-41-51-11M FOR DET			001
-070C	A225400276-934		. . DOOR ASSY-SINGLE used on 001C, 001P SEE 25-41-51-11F FOR DET			001
-070D	A225400276-942		. . DOOR ASSY-SINGLE used on 001D, 001N SEE 25-41-51-11F FOR DET			001
-070E	A225400276-946		. . DOOR ASSY-SINGLE PRE VSB A2-254-25-106 used on 001E SEE 25-41-51-11G FOR DET			001

- ITEM NOT ILLUSTRATED

FIG. ITEM	PART NUMBER	AIRLINE STOCK NUMBER	NOMENCLATURE 1234567	EFF CODE	UNITS PER ASSY
-070F	A225400278-818		. . DOOR ASSY-SINGLE used on 001F SEE 25-41-51-11K FOR DET		001
-070G	A225400278-532		. . DOOR ASSY-SINGLE used on 001G SEE 25-41-51-11M FOR DET		001
-070H	A225400276-940		. . DOOR ASSY-SINGLE used on 001H SEE 25-41-51-11F FOR DET		001
-070J	A225400278-524		. . DOOR ASSY-SINGLE used on 001J SEE 25-41-51-11K FOR DET		001
-070K	A225400276-574		. . DOOR ASSY-SINGLE used on 001K SEE 25-41-51-11E FOR DET		001
-070L	A225400276-966		. . DOOR ASSY-SINGLE used on 001L SEE 25-41-51-11J FOR DET		001
-070M	A225400278-530		. . DOOR ASSY-SINGLE used on 001M SEE 25-41-51-11K FOR DET		001
-070N	A225400278-926		. . DOOR ASSY-SINGLE POST VSB A2-254-25-106 used on 001R SEE 25-41-51-11G FOR DET		001
080A	D2549020811871		. . TOILET UNIT AND TOILET SHROUD NP used on 001A, 001B, 001J, 001M, 001Q SEE 25-41-51-12G FOR DET		001

- ITEM NOT ILLUSTRATED

FIG. ITEM	PART NUMBER	AIRLINE STOCK NUMBER	NOMENCLATURE 1234567		EFF CODE	UNITS PER ASSY
-080B	D2549010607071		. . TOILET UNIT AND TOILET SHROUD PRE VSB A2-254-25-106 used on 001C, 001E, 001K, 001P SEE 25-41-51-12D FOR DET	NP		001
-080C	D2549020514671		. . TOILET UNIT AND TOILET SHROUD used on 001D, 001N SEE 25-41-51-12E FOR DET	NP		001
-080D	D2549030410071		. . TOILET UNIT AND TOILET SHROUD used on 001F SEE 25-41-51-12G FOR DET	NP		001
-080E	D2549020400871		. . TOILET UNIT AND TOILET SHROUD used on 001G SEE 25-41-51-12G FOR DET	NP		001
-080F	D2549030614671		. . TOILET UNIT AND TOILET SHROUD used on 001H SEE 25-41-51-12E FOR DET	NP		001
-080G	D2549020403271		. . TOILET UNIT AND TOILET SHROUD used on 001L SEE 25-41-51-12G FOR DET	NP		001
-080H	R22540166200071		. . TOILET UNIT AND TOILET SHROUD POST VSB A2-254-25-106 used on 001R SEE 25-41-51-12D FOR DET	NP		001
090A	D2549020403272		. . PAN-FLOOR used on 001L SEE 25-41-51-13N FOR DET	NP		001

- ITEM NOT ILLUSTRATED

FIG. ITEM	PART NUMBER	AIRLINE STOCK NUMBER	NOMENCLATURE 1234567	EFF CODE	UNITS PER ASSY
-090B	D2549030409672		. . PAN-FLOOR NP used on 001A, 001B, 001Q SEE 25-41-51-13N FOR DET		001
-090C	D2549040500672		. . PAN-FLOOR NP used on 001C, 001P SEE 25-41-51-13M FOR DET		001
-090D	D2549020810472		. . PAN-FLOOR NP used on 001D, 001N SEE 25-41-51-13L FOR DET		001
-090E	D2549030404272		. . PAN-FLOOR NP PRE VSB A2-254-25-106 used on 001E SEE 25-41-51-13J FOR DET		001
-090F	D2549020400672		. . PAN-FLOOR NP used on 001F SEE 25-41-51-13N FOR DET		001
-090G	D2549020400872		. . PAN-FLOOR NP used on 001G SEE 25-41-51-13N FOR DET		001
-090H	D2549020405472		. . PAN-FLOOR NP used on 001H SEE 25-41-51-13L FOR DET		001
-090J	D2549020402272		. . PAN-FLOOR NP used on 001J SEE 25-41-51-13N FOR DET		001
-090K	D2549030401272		. . PAN-FLOOR NP used on 001K SEE 25-41-51-13K FOR DET		001
-090L	D2549030410072		. . PAN-FLOOR NP used on 001M SEE 25-41-51-13N FOR DET		001

- ITEM NOT ILLUSTRATED

FIG. ITEM	PART NUMBER	AIRLINE STOCK NUMBER	NOMENCLATURE 1234567		EFF CODE	UNITS PER ASSY
-090M	R22540166200072		. . PAN-FLOOR POST VSB A2-254-25-106 used on 001R SEE 25-41-51-13J FOR DET	NP		001
100A	D2549010512673		. . LIGHT-DOOR PRE VSB A2-254-25-106 used on 001A, 001D, 001E, 001F, 001G, 001J, 001K, 001L, 001N, 001Q SEE 25-41-51-140 FOR DET	NP		001
-100B	D2549030409673		. . LIGHT-DOOR used on 001B SEE 25-41-51-14B FOR DET	NP		001
-100C	D2549040500273		. . LIGHT-DOOR used on 001C, 001P SEE 25-41-51-14A FOR DET	NP		001
-100D	D2549020612273		. . LIGHT-DOOR used on 001H, 001M SEE 25-41-51-14A FOR DET	NP		001
-100E	R22540166200073		. . LIGHT-DOOR POST VSB A2-254-25-106 used on 001R SEE 25-41-51-140 FOR DET	NP		001
110A	D2549020407674		. . WASHBASIN UNIT used on 001A, 001Q SEE 25-41-51-15L FOR DET	NP		001
-110B	D2549030409674		. . WASHBASIN UNIT used on 001B SEE 25-41-51-15L FOR DET	NP		001
-110C	D2549040500674		. . WASHBASIN UNIT used on 001C, 001P SEE 25-41-51-15L FOR DET	NP		001

- ITEM NOT ILLUSTRATED

FIG. ITEM	PART NUMBER	AIRLINE STOCK NUMBER	NOMENCLATURE 1234567	EFF CODE	UNITS PER ASSY
-110D	D2549030514674		. . WASHBASIN UNIT NP PRE VSB A2-254-25-106 used on 001D, 001E, 001K, 001N SEE 25-41-51-15G FOR DET		001
-110E	D2549020706674		. . WASHBASIN UNIT NP used on 001F SEE 25-41-51-15D FOR DET		001
-110F	D2549020400874		. . WASHBASIN UNIT NP used on 001G SEE 25-41-51-15L FOR DET		001
-110G	D2549020704674		. . WASHBASIN UNIT NP used on 001H SEE 25-41-51-15G FOR DET		001
-110H	D2549010603274		. . WASHBASIN UNIT NP used on 001J SEE 25-41-51-15F FOR DET		001
-110J	D2549020404074		. . WASHBASIN UNIT NP used on 001L SEE 25-41-51-15L FOR DET		001
-110K	D2549030410074		. . WASHBASIN UNIT NP used on 001M SEE 25-41-51-15L FOR DET		001
-110L	R22540166200074		. . WASHBASIN UNIT NP POST VSB A2-254-25-106 used on 001R SEE 25-41-51-15G FOR DET		001
120A	D2549030606075		. . DOOR ASSY-WASHBASIN UNIT NP PRE VSB A2-254-25-106 used on 001A, 001B, 001C, 001E, 001P, 001Q SEE 25-41-51-16E FOR DET		001

- ITEM NOT ILLUSTRATED

FIG. ITEM	PART NUMBER	AIRLINE STOCK NUMBER	NOMENCLATURE 1234567		EFF CODE	UNITS PER ASSY
-120B	D2549020607675		. . DOOR ASSY-WASHBASIN UNIT used on 001D, 001F, 001N SEE 25-41-51-16C FOR DET	NP		001
-120C	D2549010609875		. . DOOR ASSY-WASHBASIN UNIT used on 001G SEE 25-41-51-16C FOR DET	NP		001
-120D	D2549020610275		. . DOOR ASSY-WASHBASIN UNIT used on 001H SEE 25-41-51-16B FOR DET	NP		001
-120E	D2549020607075		. . DOOR ASSY-WASHBASIN UNIT used on 001J, 001K, 001M SEE 25-41-51-16B FOR DET	NP		001
-120F	D2549020605475		. . DOOR ASSY-WASHBASIN UNIT used on 001L SEE 25-41-51-16C FOR DET	NP		001
-120G	R22540166200275		. . DOOR ASSY-WASHBASIN UNIT POST VSB A2-254-25-106 used on 001R SEE 25-41-51-16E FOR DET	NP		001
130A	D2549030504876		. . PANEL ASSY-WASHBASIN UNIT PRE VSB A2-254-25-106 used on 001A, 001C, 001E, 001K, 001M, 001P, 001Q SEE 25-41-51-17C FOR DET	NP		001

- ITEM NOT ILLUSTRATED

FIG. ITEM	PART NUMBER	AIRLINE STOCK NUMBER	NOMENCLATURE 1234567	EFF CODE	UNITS PER ASSY
-130B	D2549030409676		. . PANEL ASSY-WASHBASIN UNIT NP used on 001B SEE 25-41-51-17D FOR DET		001
-130C	D2549020607676		. . PANEL ASSY-WASHBASIN UNIT NP used on 001D, 001F, 001N SEE 25-41-51-17C FOR DET		001
-130D	D2549010609876		. . PANEL ASSY-WASHBASIN UNIT NP used on 001G SEE 25-41-51-17D FOR DET		001
-130E	D2549020610276		. . PANEL ASSY-WASHBASIN UNIT NP used on 001H SEE 25-41-51-17C FOR DET		001
-130F	D2549030511076		. . PANEL ASSY-WASHBASIN UNIT NP used on 001J SEE 25-41-51-17D FOR DET		001
-130G	D2549020605476		. . PANEL ASSY-WASHBASIN UNIT NP used on 001L SEE 25-41-51-17D FOR DET		001
-130H	R22540166200076		. . PANEL ASSY-WASHBASIN UNIT NP POST VSB A2-254-25-106 used on 001R SEE 25-41-51-17C FOR DET		001

- ITEM NOT ILLUSTRATED

FIG. ITEM	PART NUMBER	AIRLINE STOCK NUMBER	NOMENCLATURE 1234567		EFF CODE	UNITS PER ASSY
140A	D2549010611677		. . BIN-WASTE,CHUTE-WASTE AND EXTINGUISHER-FIRE used on 001A, 001B, 001C, 001D, 001E, 001F, 001G, 001H, 001J, 001K, 001L, 001M, 001N, 001P, 001Q, 001R SEE 25-41-51-180 FOR DET	NP		001
150A	D2549030504078		. . CABINET-SERVICE PRE VSB A2-254-25-106 used on 001A, 001E, 001F, 001Q SEE 25-41-51-19E FOR DET	NP		001
-150B	D2549030409678		. . CABINET-SERVICE used on 001B SEE 25-41-51-19H FOR DET	NP		001
-150C	D2549030504878		. . CABINET-SERVICE PRE VSB A2-254-25-054 PRE VSB A2-254-25-080 used on 001C, 001D, 001G, 001J, 001K, 001L SEE 25-41-51-19E FOR DET	NP		001
-150D	D2549020708078		. . CABINET-SERVICE used on 001H SEE 25-41-51-19F FOR DET	NP		001
-150E	D2549010613278		. . CABINET-SERVICE used on 001M SEE 25-41-51-19F FOR DET	NP		001
-150F	R22540119500078		. . CABINET-SERVICE POST VSB A2-254-25-054 used on 001N SEE 25-41-51-19E FOR DET	NP		001
-150G	R22540114500278		. . CABINET-SERVICE POST VSB A2-254-25-080 used on 001P SEE 25-41-51-19E FOR DET	NP		001

- ITEM NOT ILLUSTRATED

FIG. ITEM	PART NUMBER	AIRLINE STOCK NUMBER	NOMENCLATURE 1234567		EFF CODE	UNITS PER ASSY
-150H	R22540166200078		. . CABINET-SERVICE POST VSB A2-254-25-106 used on 001R SEE 25-41-51-19E FOR DET	NP		001
160A	D2549010510679		. . TABLE-NURSING PRE VSB A2-254-25-106 used on 001A, 001C, 001E, 001F, 001J, 001L, 001P, 001Q SEE 25-41-51-20A FOR DET	NP		001
-160B	D2549030614679		. . TABLE-NURSING used on 001B, 001H SEE 25-41-51-20B FOR DET	NP		001
-160C	D2549010512679		. . TABLE-NURSING used on 001D, 001K, 001N SEE 25-41-51-20A FOR DET	NP		001
-160D	D2549020813279		. . TABLE-NURSING used on 001G SEE 25-41-51-20C FOR DET	NP		001
-160E	D2549010613279		. . TABLE-NURSING used on 001M SEE 25-41-51-20B FOR DET	NP		001
-160F	R22540166200079		. . TABLE-NURSING POST VSB A2-254-25-106 used on 001R SEE 25-41-51-20A FOR DET	NP		001
170A	D2549020802680		. . VENTILATION SYSTEM PRE VSB A2-254-25-106 used on 001A, 001C, 001D, 001E, 001F, 001G, 001J, 001K, 001L, 001N, 001P, 001Q SEE 25-41-51-21B FOR DET	NP		001

- ITEM NOT ILLUSTRATED

FIG. ITEM	PART NUMBER	AIRLINE STOCK NUMBER	NOMENCLATURE 1234567		EFF CODE	UNITS PER ASSY
-170B	D2549030614680		. . VENTILATION SYSTEM used on 001B, 001H, 001M SEE 25-41-51-21B FOR DET	NP		001
-170C	R22540166200080		. . VENTILATION SYSTEM POST VSB A2-254-25-106 used on 001R SEE 25-41-51-21B FOR DET	NP		001
180A	D2549020401281		. . WATER SYSTEM-POTABLE used on 001A, 001B, 001C, 001F, 001G, 001L, 001M, 001P, 001Q SEE 25-41-51-22D FOR DET	NP		001
-180B	D2549010606081		. . WATER SYSTEM-POTABLE used on 001D, 001E, 001H, 001N, 001R SEE 25-41-51-22D FOR DET	NP		001
-180C	D2549020805481		. . WATER SYSTEM-POTABLE used on 001J SEE 25-41-51-22H FOR DET	NP		001
-180D	D2549030402081		. . WATER SYSTEM-POTABLE used on 001K SEE 25-41-51-22G FOR DET	NP		001
190A	D2549030504882		. . WATER SYSTEM-WASTE used on 001A, 001G, 001H, 001L, 001Q SEE 25-41-51-23B FOR DET	NP		001
-190B	D2549020800882		. . WATER SYSTEM-WASTE used on 001B, 001C, 001M, 001P SEE 25-41-51-23D FOR DET	NP		001
-190C	D2549010511082		. . WATER SYSTEM-WASTE used on 001D, 001E, 001F, 001N, 001R SEE 25-41-51-23B FOR DET	NP		001

- ITEM NOT ILLUSTRATED

FIG. ITEM	PART NUMBER	AIRLINE STOCK NUMBER	NOMENCLATURE 1234567		EFF CODE	UNITS PER ASSY
-190D	D2549030405082		. . WATER SYSTEM-WASTE used on 001J, 001K SEE 25-41-51-23B FOR DET	NP		001
200A	D2549030410283		. . ELECTRICAL SYSTEM used on 001A, 001F, 001L, 001M, 001Q SEE 25-41-51-26R FOR DET	NP		001
-200B	D2549030409683		. . ELECTRICAL SYSTEM used on 001B SEE 25-41-51-26S FOR DET	NP		001
-200C	D2549040500683		. . ELECTRICAL SYSTEM used on 001C, 001P SEE 25-41-51-26Q FOR DET	NP		001
-200D	D2549020810283		. . ELECTRICAL SYSTEM used on 001D, 001K, 001N SEE 25-41-51-26P FOR DET	NP		001
-200E	D2549030408283		. . ELECTRICAL SYSTEM used on 001E, 001H, 001R SEE 25-41-51-26P FOR DET	NP		001
-200F	D2549020400883		. . ELECTRICAL SYSTEM used on 001G SEE 25-41-51-26R FOR DET	NP		001
-200G	D2549020402283		. . ELECTRICAL SYSTEM used on 001J SEE 25-41-51-26R FOR DET	NP		001
210A	D9250000000285		. . ELECTRICAL SYSTEM-COCKPIT DOOR LOCKING used on 001B, 001C, 001D, 001E, 001F, 001G, 001H, 001J, 001L, 001M, 001N, 001P, 001R SEE 25-41-51-31B FOR DET	NP		001

- ITEM NOT ILLUSTRATED

FIG. ITEM	PART NUMBER	AIRLINE STOCK NUMBER	NOMENCLATURE 1234567		EFF CODE	UNITS PER ASSY
-210B	D9250000000185		. . ELECTRICAL SYSTEM-COCKPIT DOOR LOCKING used on 001K SEE 25-41-51-31A FOR DET	NP		001
-210C	D9250000000685		. . ELECTRICAL SYSTEM-COCKPIT DOOR LOCKING used on 001A, 001Q SEE 25-41-51-31C FOR DET	NP		001

- ITEM NOT ILLUSTRATED

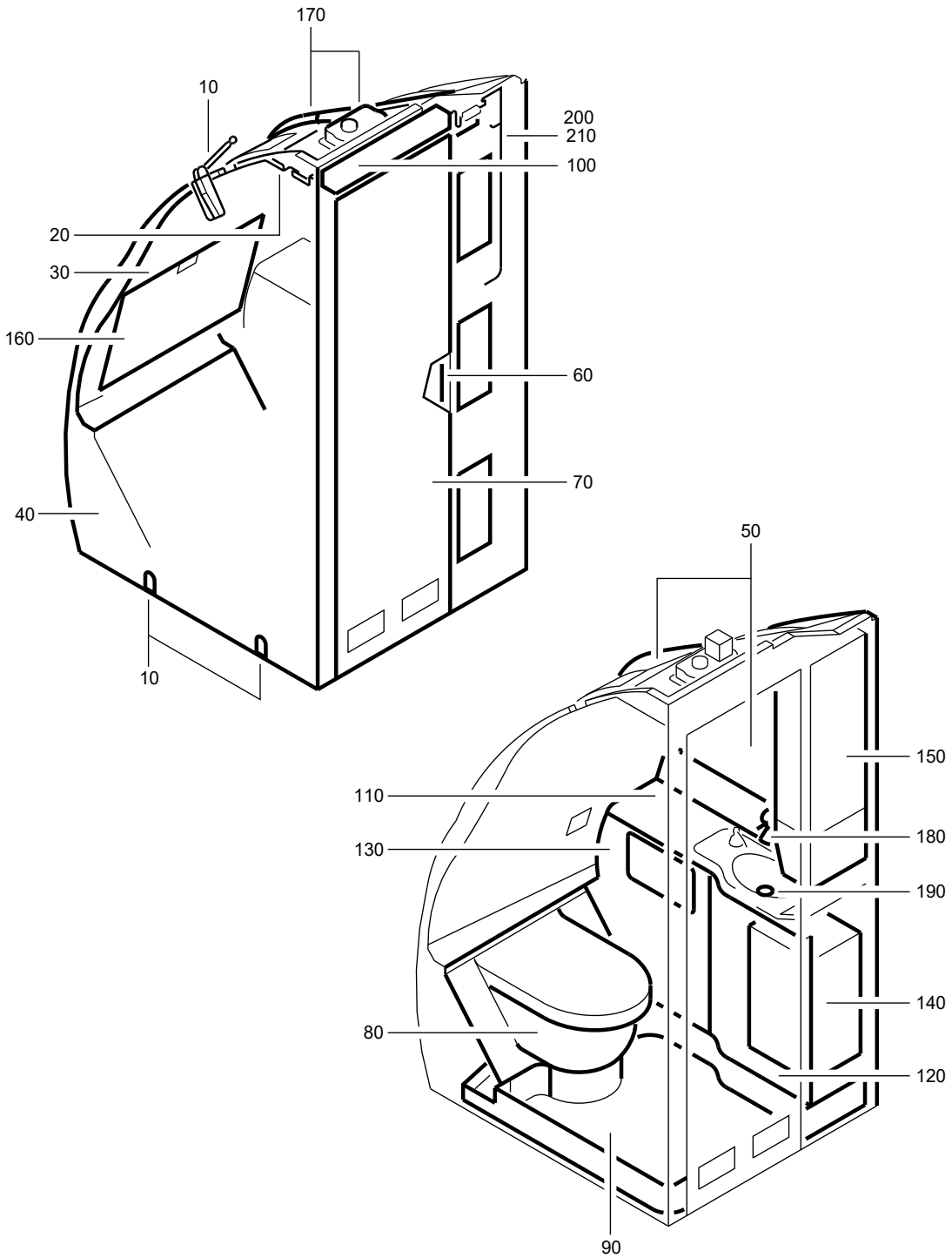

F_PL_254151_42_H_01_00

LAVATORY A ASSY
Figure 42H/EN254151SHEET42H01

FIG. ITEM	PART NUMBER	AIRLINE STOCK NUMBER	NOMENCLATURE 1234567	EFF CODE	UNITS PER ASSY
42H					
-001A	D2549030409400		. LAVATORY A ASSY SEE SIL 25-117 FOR DET		RF
-001B	D2549020406000		. LAVATORY A ASSY SEE SIL 25-117 FOR DET		RF
-001C	D2549010401000		. LAVATORY A ASSY SEE SIL 25-117 FOR DET		RF
-001D	D2549020809600		. LAVATORY A ASSY SEE SIL 25-117 FOR DET		RF
-001E	D2549040500400		. LAVATORY A ASSY SEE SIL 25-117 FOR DET		RF
-001F	D2549020406400		. LAVATORY A ASSY PRE VSB A2-254-25-093 SEE SIL 25-117 FOR DET		RF
-001G	D2549010402200		. LAVATORY A ASSY PRE VSB A2-254-25-029 SEE SIL 25-117 FOR DET		RF
-001H	D2549020407400		. LAVATORY A ASSY SEE SIL 25-117 FOR DET		RF
-001J	D2549010403600		. LAVATORY A ASSY SEE SIL 25-117 FOR DET		RF
-001K	D2549040500800		. LAVATORY A ASSY PRE VSB A2-254-25-080 SEE SIL 25-117 FOR DET		RF
-001L	D2549030411400		. LAVATORY A ASSY PRE VSB A2-254-25-064 PRE VSB A2-254-25-070 SEE SIL 25-117 FOR DET		RF

- ITEM NOT ILLUSTRATED

FIG. ITEM	PART NUMBER	AIRLINE STOCK NUMBER	NOMENCLATURE 1234567		EFF CODE	UNITS PER ASSY
-001M	D2549020401600		. LAVATORY A ASSY PRE VSB A2-254-25-057 SEE SIL 25-117 FOR DET			RF
-001N	R225401676-000		. LAVATORY A ASSY POST VSB A2-254-25-029 SEE SIL 25-117 FOR DET			RF
-001P	R225401673-002		. LAVATORY A ASSY POST VSB A2-254-25-080 SEE SIL 25-117 FOR DET			RF
-001Q	R225401648-004		. LAVATORY A ASSY POST VSB A2-254-25-064			RF
-001R	R225401649-000		. LAVATORY A ASSY POST VSB A2-254-25-093			RF
-001S	R225401624-000		. LAVATORY A ASSY POST VSB A2-254-25-057			RF
-001T	R225401648-008		. LAVATORY A ASSY POST VSB A2-254-25-070			RF
010A	D2549030410261		. . ATTACHMENT-LAVATORY used on 001A SEE 25-41-51-02C FOR DET	NP		001
-010B	D2549010613861		. . ATTACHMENT-LAVATORY used on 001B, 001C, 001D, 001F, 001G, 001H, 001J, 001L, 001M, 001N, 001Q, 001R, 001S, 001T SEE 25-41-51-02C FOR DET	NP		001
-010C	D2549040500861		. . ATTACHMENT-LAVATORY used on 001E, 001K, 001P SEE 25-41-51-02B FOR DET	NP		001
020A	D2549030410263		. . PANEL-CEILING used on 001A SEE 25-41-51-04A FOR DET	NP		001

- ITEM NOT ILLUSTRATED

FIG. ITEM	PART NUMBER	AIRLINE STOCK NUMBER	NOMENCLATURE 1234567		EFF CODE	UNITS PER ASSY
-020B	D2549030401463		. . PANEL-CEILING used on 001B, 001C, 001D, 001F, 001G, 001H, 001J, 001L, 001M, 001N, 001Q, 001R, 001S, 001T SEE 25-41-51-040 FOR DET	NP		001
-020C	D2549040500663		. . PANEL-CEILING used on 001E, 001K, 001P SEE 25-41-51-04A FOR DET	NP		001
030A	D2549010613264		. . WALL-REAR used on 001A SEE 25-41-51-05H FOR DET	NP		001
-030B	D2549020805464		. . WALL-REAR used on 001B, 001C, 001D, 001E, 001F, 001G, 001J, 001M, 001N, 001R, 001S SEE 25-41-51-05H FOR DET	NP		001
-030C	D2549030406464		. . WALL-REAR used on 001H, 001L, 001Q, 001T SEE 25-41-51-05F FOR DET	NP		001
-030D	D2549020812264		. . WALL-REAR used on 001K, 001P SEE 25-41-51-05H FOR DET	NP		001
040A	D2549030409465		. . WALL-SIDE used on 001A SEE 25-41-51-48G FOR DET	NP		001
-040B	D2549030410065		. . WALL-SIDE used on 001B SEE 25-41-51-48G FOR DET	NP		001
-040C	D2549010401065		. . WALL-SIDE used on 001C, 001F, 001R SEE 25-41-51-48G FOR DET	NP		001

- ITEM NOT ILLUSTRATED

FIG. ITEM	PART NUMBER	AIRLINE STOCK NUMBER	NOMENCLATURE 1234567		EFF CODE	UNITS PER ASSY
-040D	D2549020809665		. . WALL-SIDE used on 001D SEE 25-41-51-48G FOR DET	NP		001
-040E	D2549040500465		. . WALL-SIDE used on 001E SEE 25-41-51-48A FOR DET	NP		001
-040F	D2549010402265		. . WALL-SIDE used on 001G, 001N SEE 25-41-51-48D FOR DET	NP		001
-040G	D2549020403265		. . WALL-SIDE used on 001H SEE 25-41-51-48G FOR DET	NP		001
-040H	D2549010403665		. . WALL-SIDE used on 001J SEE 25-41-51-48D FOR DET	NP		001
-040J	D2549040500865		. . WALL-SIDE PRE VSB A2-254-25-080 used on 001K SEE 25-41-51-48A FOR DET	NP		001
-040K	D2549030411465		. . WALL-SIDE used on 001L, 001Q, 001T SEE 25-41-51-48D FOR DET	NP		001
-040L	D2549020401665		. . WALL-SIDE used on 001M, 001S SEE 25-41-51-48H FOR DET	NP		001
-040M	R22540167300265		. . WALL-SIDE POST VSB A2-254-25-080 used on 001P SEE 25-41-51-48A FOR DET	NP		001
050A	D2549030409466		. . HOUSING used on 001A SEE 25-41-51-07X FOR DET	NP		001

- ITEM NOT ILLUSTRATED

FIG. ITEM	PART NUMBER	AIRLINE STOCK NUMBER	NOMENCLATURE 1234567	EFF CODE	UNITS PER ASSY
-050B	D2549020406066		. . HOUSING NP used on 001B SEE 25-41-51-07X FOR DET		001
-050C	D2549010401066		. . HOUSING NP used on 001C, 001F, 001R SEE 25-41-51-07X FOR DET		001
-050D	D2549030410066		. . HOUSING NP used on 001D, 001J SEE 25-41-51-07W FOR DET		001
-050E	D2549040500466		. . HOUSING NP used on 001E SEE 25-41-51-07X FOR DET		001
-050F	D2549010402266		. . HOUSING NP used on 001G, 001N SEE 25-41-51-07X FOR DET		001
-050G	D2549020403266		. . HOUSING NP used on 001H SEE 25-41-51-07X FOR DET		001
-050H	D2549040500866		. . HOUSING NP used on 001K, 001P SEE 25-41-51-07X FOR DET		001
-050J	D2549020401266		. . HOUSING NP used on 001L, 001Q, 001T SEE 25-41-51-07W FOR DET		001
-050K	D2549020401666		. . HOUSING NP used on 001M, 001S SEE 25-41-51-07Z FOR DET		001

- ITEM NOT ILLUSTRATED

FIG. ITEM	PART NUMBER	AIRLINE STOCK NUMBER	NOMENCLATURE 1234567	EFF CODE	UNITS PER ASSY
060A	D2549020401269		. . DOOR INSTL NP used on 001A, 001B, 001C, 001D, 001E, 001F, 001G, 001H, 001J, 001K, 001L, 001M, 001N, 001P, 001Q, 001R, 001S, 001T SEE 25-41-51-10A FOR DET		001
070A	A225400276-940		. . DOOR ASSY-SINGLE used on 001A SEE 25-41-51-11F FOR DET		001
-070B	A225400278-538		. . DOOR ASSY-SINGLE used on 001B SEE 25-41-51-11M FOR DET		001
-070C	A225400278-900		. . DOOR ASSY-SINGLE used on 001C, 001F, 001R SEE 25-41-51-11K FOR DET		001
-070D	A225400276-578		. . DOOR ASSY-SINGLE used on 001D SEE 25-41-51-11F FOR DET		001
-070E	A225400276-960		. . DOOR ASSY-SINGLE used on 001E SEE 25-41-51-11J FOR DET		001
-070F	A225400278-514		. . DOOR ASSY-SINGLE used on 001L, 001Q, 001T SEE 25-41-51-11H FOR DET		001
-070G	A225400276-966		. . DOOR ASSY-SINGLE used on 001H SEE 25-41-51-11J FOR DET		001
-070H	A225400278-510		. . DOOR ASSY-SINGLE used on 001J SEE 25-41-51-11H FOR DET		001

- ITEM NOT ILLUSTRATED

FIG. ITEM	PART NUMBER	AIRLINE STOCK NUMBER	NOMENCLATURE 1234567		EFF CODE	UNITS PER ASSY
-070J	A225400276-934		. . DOOR ASSY-SINGLE used on 001K, 001P SEE 25-41-51-11F FOR DET			001
-070K	A225400278-806		. . DOOR ASSY-SINGLE used on 001M, 001S SEE 25-41-51-11H FOR DET			001
-070L	A225400278-564		. . DOOR ASSY-SINGLE used on 001G, 001N SEE 25-41-51-11P FOR DET			001
080A	D2549030409471		. . TOILET UNIT AND TOILET SHROUD used on 001A SEE 25-41-51-12G FOR DET	NP		001
-080B	D2549030410071		. . TOILET UNIT AND TOILET SHROUD used on 001B SEE 25-41-51-12G FOR DET	NP		001
-080C	D2549010401071		. . TOILET UNIT AND TOILET SHROUD used on 001C, 001F, 001R SEE 25-41-51-12G FOR DET	NP		001
-080D	D2549020811871		. . TOILET UNIT AND TOILET SHROUD used on 001D, 001E, 001G, 001J, 001K, 001N, 001P SEE 25-41-51-12G FOR DET	NP		001
-080E	D2549020403271		. . TOILET UNIT AND TOILET SHROUD used on 001H SEE 25-41-51-12G FOR DET	NP		001

- ITEM NOT ILLUSTRATED

FIG. ITEM	PART NUMBER	AIRLINE STOCK NUMBER	NOMENCLATURE 1234567		EFF CODE	UNITS PER ASSY
-080F	D2549030412471		. . TOILET UNIT AND TOILET SHROUD used on 001L, 001Q, 001T SEE 25-41-51-12G FOR DET	NP		001
-080G	D2549020400871		. . TOILET UNIT AND TOILET SHROUD used on 001M, 001S SEE 25-41-51-12G FOR DET	NP		001
090A	D2549030409472		. . PAN-FLOOR used on 001A SEE 25-41-51-13P FOR DET	NP		001
-090B	D2549030410072		. . PAN-FLOOR used on 001B SEE 25-41-51-13N FOR DET	NP		001
-090C	D2549010401072		. . PAN-FLOOR used on 001C SEE 25-41-51-13P FOR DET	NP		001
-090D	D2549030409672		. . PAN-FLOOR used on 001D, 001J SEE 25-41-51-13N FOR DET	NP		001
-090E	D2549040500472		. . PAN-FLOOR used on 001E SEE 25-41-51-13P FOR DET	NP		001
-090F	D2549020406472		. . PAN-FLOOR used on 001F, 001R SEE 25-41-51-13P FOR DET	NP		001
-090G	D2549010402272		. . PAN-FLOOR used on 001G, 001N SEE 25-41-51-13P FOR DET	NP		001
-090H	D2549020403272		. . PAN-FLOOR used on 001H SEE 25-41-51-13N FOR DET	NP		001

- ITEM NOT ILLUSTRATED

FIG. ITEM	PART NUMBER	AIRLINE STOCK NUMBER	NOMENCLATURE 1234567		EFF CODE	UNITS PER ASSY
-090J	D2549040500872		. . PAN-FLOOR used on 001K, 001P SEE 25-41-51-13P FOR DET	NP		001
-090K	D2549030411472		. . PAN-FLOOR used on 001L, 001Q, 001T SEE 25-41-51-13P FOR DET	NP		001
-090L	D2549020401672		. . PAN-FLOOR used on 001M, 001S SEE 25-41-51-13P FOR DET	NP		001
100A	D2549020612273		. . LIGHT-DOOR used on 001A SEE 25-41-51-14A FOR DET	NP		001
-100B	D2549010512673		. . LIGHT-DOOR used on 001B, 001C, 001D, 001F, 001G, 001H, 001J, 001L, 001M, 001N, 001Q, 001R, 001S, 001T SEE 25-41-51-140 FOR DET	NP		001
-100C	D2549040500273		. . LIGHT-DOOR used on 001E, 001K, 001P SEE 25-41-51-14A FOR DET	NP		001
110A	D2549020404074		. . WASHBASIN UNIT used on 001A, 001H, 001J SEE 25-41-51-15L FOR DET	NP		001
-110B	D2549030410074		. . WASHBASIN UNIT used on 001B, 001D, 001L, 001Q, 001T SEE 25-41-51-15L FOR DET	NP		001
-110C	D2549020706674		. . WASHBASIN UNIT used on 001C, 001F, 001R SEE 25-41-51-15D FOR DET	NP		001

- ITEM NOT ILLUSTRATED

FIG. ITEM	PART NUMBER	AIRLINE STOCK NUMBER	NOMENCLATURE 1234567		EFF CODE	UNITS PER ASSY
-110D	D2549020402674		. . WASHBASIN UNIT used on 001E SEE 25-41-51-15L FOR DET	NP		001
-110E	D2549030410074		. . WASHBASIN UNIT used on 001G, 001N SEE 25-41-51-15L FOR DET	NP		001
-110F	D2549020401674		. . WASHBASIN UNIT used on 001M, 001S SEE 25-41-51-15M FOR DET	NP		001
-110G	D2549040500674		. . WASHBASIN UNIT used on 001K, 001P SEE 25-41-51-15L FOR DET	NP		001
120A	D2549020610275		. . DOOR ASSY-WASHBASIN UNIT used on 001A SEE 25-41-51-16B FOR DET	NP		001
-120B	D2549020607675		. . DOOR ASSY-WASHBASIN UNIT used on 001B SEE 25-41-51-16C FOR DET	NP		001
-120C	D2549010603675		. . DOOR ASSY-WASHBASIN UNIT used on 001C, 001F, 001R SEE 25-41-51-16C FOR DET	NP		001
-120D	D2549030606075		. . DOOR ASSY-WASHBASIN UNIT used on 001D, 001E, 001G, 001J, 001K, 001M, 001N, 001P, 001S SEE 25-41-51-16E FOR DET	NP		001
-120E	D2549020605475		. . DOOR ASSY-WASHBASIN UNIT used on 001H SEE 25-41-51-16C FOR DET	NP		001

- ITEM NOT ILLUSTRATED

FIG. ITEM	PART NUMBER	AIRLINE STOCK NUMBER	NOMENCLATURE 1234567		EFF CODE	UNITS PER ASSY
-120F	D2549030504675		. . DOOR ASSY-WASHBASIN UNIT used on 001L, 001Q, 001T SEE 25-41-51-16B FOR DET	NP		001
130A	D2549020610276		. . PANEL ASSY-WASHBASIN UNIT used on 001A SEE 25-41-51-17C FOR DET	NP		001
-130B	D2549020607676		. . PANEL ASSY-WASHBASIN UNIT used on 001B SEE 25-41-51-17C FOR DET	NP		001
-130C	D2549010603676		. . PANEL ASSY-WASHBASIN UNIT used on 001C, 001F, 001R SEE 25-41-51-17D FOR DET	NP		001
-130D	D2549030504876		. . PANEL ASSY-WASHBASIN UNIT used on 001D, 001E, 001G, 001J, 001K, 001M, 001N, 001P, 001S SEE 25-41-51-17C FOR DET	NP		001
-130E	D2549020605476		. . PANEL ASSY-WASHBASIN UNIT used on 001H SEE 25-41-51-17D FOR DET	NP		001
-130F	D2549030504676		. . PANEL ASSY-WASHBASIN UNIT used on 001L, 001Q, 001T SEE 25-41-51-17C FOR DET	NP		001

- ITEM NOT ILLUSTRATED

FIG. ITEM	PART NUMBER	AIRLINE STOCK NUMBER	NOMENCLATURE 1234567		EFF CODE	UNITS PER ASSY
140A	D2549010611677		. . BIN-WASTE,CHUTE-WASTE AND EXTINGUISHER-FIRE used on 001A, 001B, 001C, 001D, 001E, 001F, 001G, 001H, 001J, 001K, 001L, 001M, 001N, 001P, 001Q, 001R, 001S, 001T SEE 25-41-51-180 FOR DET	NP		001
150A	D2549020708078		. . CABINET-SERVICE used on 001A SEE 25-41-51-19F FOR DET	NP		001
-150B	D2549030504878		. . CABINET-SERVICE PRE VSB A2-254-25-029 PRE VSB A2-254-25-080 used on 001B, 001C, 001D, 001E, 001F, 001G, 001K, 001M, 001R, 001S SEE 25-41-51-19E FOR DET	NP		001
-150C	D2549020407478		. . CABINET-SERVICE used on 001H SEE 25-41-51-19J FOR DET	NP		001
-150D	D2549030505278		. . CABINET-SERVICE used on 001J SEE 25-41-51-19E FOR DET	NP		001
-150E	D2549030504078		. . CABINET-SERVICE used on 001L, 001Q, 001T SEE 25-41-51-19E FOR DET	NP		001
-150F	R22540163900078		. . CABINET-SERVICE POST VSB A2-254-25-029 used on 001N SEE 25-41-51-19E FOR DET	NP		001
-150G	R22540114500278		. . CABINET-SERVICE POST VSB A2-254-25-080 used on 001P SEE 25-41-51-19E FOR DET	NP		001

- ITEM NOT ILLUSTRATED

FIG. ITEM	PART NUMBER	AIRLINE STOCK NUMBER	NOMENCLATURE 1234567		EFF CODE	UNITS PER ASSY
160A	D2549030614679		. . TABLE-NURSING used on 001A SEE 25-41-51-20B FOR DET	NP		001
-160B	D2549010510679		. . TABLE-NURSING used on 001B, 001C, 001D, 001E, 001F, 001G, 001H, 001K, 001M, 001N, 001P, 001R, 001S SEE 25-41-51-20A FOR DET	NP		001
-160C	D2549010512679		. . TABLE-NURSING used on 001J, 001L, 001Q, 001T SEE 25-41-51-20A FOR DET	NP		001
170A	D2549030614680		. . VENTILATION SYSTEM used on 001A SEE 25-41-51-21B FOR DET	NP		001
-170B	D2549020802680		. . VENTILATION SYSTEM used on 001B, 001C, 001D, 001E, 001F, 001G, 001H, 001J, 001K, 001L, 001M, 001N, 001P, 001Q, 001R, 001S, 001T SEE 25-41-51-21B FOR DET	NP		001
180A	D2549020401281		. . WATER SYSTEM-POTABLE PRE VSB A2-254-25-029 used on 001A, 001C, 001D, 001E, 001F, 001G, 001H, 001J, 001K, 001L, 001M, 001P, 001Q, 001R, 001S, 001T SEE 25-41-51-22D FOR DET	NP		001
-180B	D2549030410081		. . WATER SYSTEM-POTABLE used on 001B SEE 25-41-51-22G FOR DET	NP		001
-180C	R22540167600081		. . WATER SYSTEM-POTABLE POST VSB A2-254-25-029 used on 001N SEE 25-41-51-22D FOR DET	NP		001

- ITEM NOT ILLUSTRATED

FIG. ITEM	PART NUMBER	AIRLINE STOCK NUMBER	NOMENCLATURE 1234567	EFF CODE	UNITS PER ASSY
190A	D2549030504882		. . WATER SYSTEM-WASTE NP used on 001A, 001J SEE 25-41-51-23B FOR DET		001
-190B	D2549030405082		. . WATER SYSTEM-WASTE NP used on 001B SEE 25-41-51-23B FOR DET		001
-190C	D2549010511082		. . WATER SYSTEM-WASTE NP PRE VSB A2-254-25-029 used on 001C, 001D, 001E, 001F, 001G, 001H, 001K, 001L, 001M, 001P, 001Q, 001R, 001S, 001T SEE 25-41-51-23B FOR DET		001
-190D	R22540167600082		. . WATER SYSTEM-WASTE NP POST VSB A2-254-25-029 used on 001N SEE 25-41-51-23B FOR DET		001
200A	D2549020400883		. . ELECTRICAL SYSTEM NP used on 001A, 001G, 001M, 001N, 001S SEE 25-41-51-26R FOR DET		001
-200B	D2549030410283		. . ELECTRICAL SYSTEM NP used on 001B, 001C, 001D, 001F, 001H, 001J, 001L, 001Q, 001R, 001T SEE 25-41-51-26R FOR DET		001
-200C	D2549040500283		. . ELECTRICAL SYSTEM NP used on 001E SEE 25-41-51-26Q FOR DET		001
-200D	D2549040500683		. . ELECTRICAL SYSTEM NP used on 001K, 001P SEE 25-41-51-26Q FOR DET		001

- ITEM NOT ILLUSTRATED

FIG. ITEM	PART NUMBER	AIRLINE STOCK NUMBER	NOMENCLATURE 1234567		EFF CODE	UNITS PER ASSY
210A	D9250000000285		. . ELECTRICAL SYSTEM-COCKPIT DOOR LOCKING used on 001A, 001B, 001C, 001D, 001E, 001F, 001G, 001H, 001J, 001K, 001L, 001M, 001N, 001P, 001Q, 001R, 001S, 001T SEE 25-41-51-31B FOR DET	NP		001

- ITEM NOT ILLUSTRATED

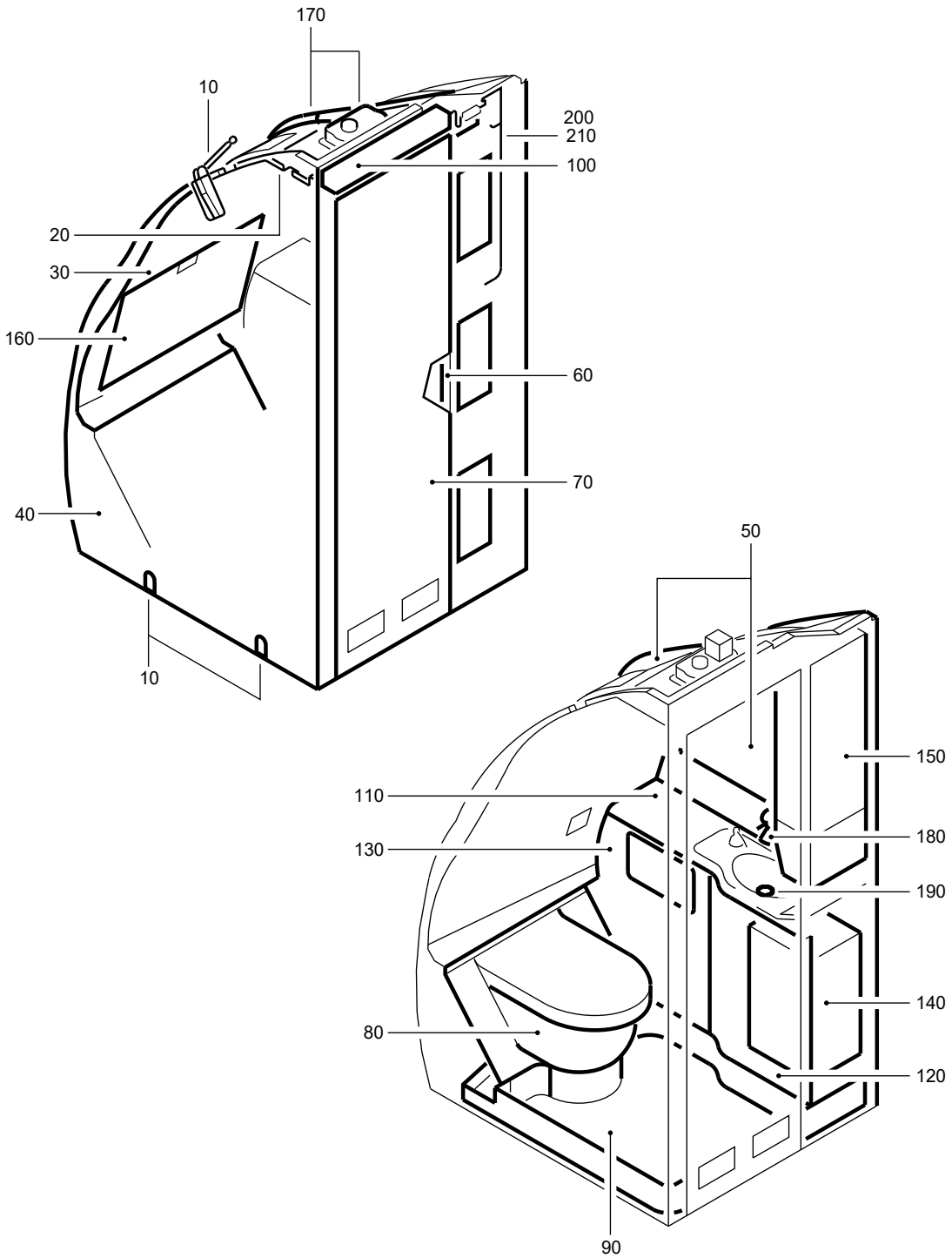

F_PL_254151_42_J_01_00

LAVATORY A ASSY
Figure 42J/EN254151SHEET42J01

FIG. ITEM	PART NUMBER	AIRLINE STOCK NUMBER	NOMENCLATURE 1234567	EFF CODE	UNITS PER ASSY
42J					
-001A	D2549020402000		. LAVATORY A ASSY SEE SIL 25-117 FOR DET		RF
-001B	D2549020407000		. LAVATORY A ASSY PRE VSB A2-254-25-042 PRE VSB A2-254-25-057 SEE SIL 25-117 FOR DET		RF
-001C	D2549020407800		. LAVATORY A ASSY PRE VSB A2-254-25-042 SEE SIL 25-117 FOR DET		RF
-001D	D2549010401400		. LAVATORY A ASSY SEE SIL 25-117 FOR DET		RF
-001E	D2549030412000		. LAVATORY A ASSY SEE SIL 25-117 FOR DET		RF
-001F	D2549010401600		. LAVATORY A ASSY SEE SIL 25-117 FOR DET		RF
-001G	D2549020409000		. LAVATORY A ASSY PRE VSB A2-254-25-042 SEE SIL 25-117 FOR DET		RF
-001H	D2549010404000		. LAVATORY A ASSY SEE SIL 25-117 FOR DET		RF
-001J	D2549010404400		. LAVATORY A ASSY SEE SIL 25-117 FOR DET		RF
-001K	D2547160900200		. LAVATORY A ASSY POST SB 25-1353 SEE SIL 25-117 FOR DET		RF
-001L	D2549030413600		. LAVATORY A ASSY PRE VSB A2-254-25-045 SEE SIL 25-117 FOR DET		RF

- ITEM NOT ILLUSTRATED

FIG. ITEM	PART NUMBER	AIRLINE STOCK NUMBER	NOMENCLATURE 1234567	EFF CODE	UNITS PER ASSY
-001M	D2549010404800		. LAVATORY A ASSY PRE VSB A2-254-25-047 SEE SIL 25-117 FOR DET		RF
-001N	D2547160900200		. LAVATORY A ASSY POST SB 25-1400 SEE SIL 25-117 FOR DET		RF
-001P	R225401196-020		. LAVATORY A ASSY PRE VSB A2-254-25-130 POST VSB A2-254-25-042 SEE SIL 25-117 FOR DET		RF
-001Q	R225401152-010		. LAVATORY A ASSY POST VSB A2-254-25-042 SEE SIL 25-117 FOR DET		RF
-001R	R225401196-022		. LAVATORY A ASSY PRE VSB A2-254-25-130 POST VSB A2-254-25-042 SEE SIL 25-117 FOR DET		RF
-001S	R225401199-012		. LAVATORY A ASSY POST VSB A2-254-25-045 SEE SIL 25-117 FOR DET		RF
-001T	R225401183-006		. LAVATORY A ASSY POST VSB A2-254-25-047		RF
-001U	R225401196-042		. LAVATORY A ASSY POST VSB A2-254-25-057		RF
-001V	R225401196-066		. LAVATORY A ASSY POST VSB A2-254-25-130 SEE SIL 25-117 FOR DET		RF
-001W	R225401196-068		. LAVATORY A ASSY POST VSB A2-254-25-130 SEE SIL 25-117 FOR DET		RF

- ITEM NOT ILLUSTRATED

FIG. ITEM	PART NUMBER	AIRLINE STOCK NUMBER	NOMENCLATURE 1234567		EFF CODE	UNITS PER ASSY
010A	D2549010613861		. . ATTACHMENT-LAVATORY PRE VSB A2-254-25-130 used on 001A, 001B, 001C, 001D, 001E, 001G, 001H, 001J, 001K, 001L, 001M, 001N, 001P, 001Q, 001R, 001S, 001T, 001U SEE 25-41-51-02C FOR DET	NP		001
-010B	D2549010401661		. . ATTACHMENT-LAVATORY used on 001F SEE 25-41-51-02B FOR DET	NP		001
-010C	R22540119606261		. . ATTACHMENT-LAVATORY POST VSB A2-254-25-130 used on 001V, 001W SEE 25-41-51-02C FOR DET	NP		001
020A	D2549030401463		. . PANEL-CEILING PRE VSB A2-254-25-130 used on 001A, 001B, 001C, 001D, 001E, 001G, 001H, 001J, 001K, 001L, 001M, 001N, 001P, 001Q, 001R, 001S, 001T, 001U SEE 25-41-51-040 FOR DET	NP		001
-020B	D2549010611463		. . PANEL-CEILING used on 001F SEE 25-41-51-04A FOR DET	NP		001
-020C	R22540119604663		. . PANEL-CEILING POST VSB A2-254-25-130 used on 001V, 001W SEE 25-41-51-040 FOR DET	NP		001
030A	D2549020807864		. . WALL-REAR used on 001A SEE 25-41-51-05H FOR DET	NP		001

- ITEM NOT ILLUSTRATED

FIG. ITEM	PART NUMBER	AIRLINE STOCK NUMBER	NOMENCLATURE 1234567	EFF CODE	UNITS PER ASSY
-030B	D2549020805464		. . WALL-REAR NP PRE VSB A2-254-25-130 used on 001B, 001C, 001D, 001G, 001H, 001J, 001L, 001P, 001Q, 001R, 001S, 001U SEE 25-41-51-05H FOR DET		001
-030C	D2549010400864		. . WALL-REAR NP used on 001E, 001K, 001N SEE 25-41-51-05J FOR DET		001
-030D	D2549010611464		. . WALL-REAR NP used on 001F SEE 25-41-51-05H FOR DET		001
-030E	D2549030406464		. . WALL-REAR NP used on 001M, 001T SEE 25-41-51-05F FOR DET		001
-030F	D2549010613264		. . WALL-REAR NP POST VSB A2-254-25-130 used on 001V, 001W SEE 25-41-51-05H FOR DET		001
040A	D2549020402065		. . WALL-SIDE NP used on 001A SEE 25-41-51-48H FOR DET		001
-040B	D2549020402665		. . WALL-SIDE NP PRE VSB A2-254-25-042 used on 001B, 001C, 001G, 001U SEE 25-41-51-48D FOR DET		001
-040C	D2549010401465		. . WALL-SIDE NP used on 001D SEE 25-41-51-48J FOR DET		001
-040D	D2549020407265		. . WALL-SIDE NP used on 001E, 001H SEE 25-41-51-48H FOR DET		001

- ITEM NOT ILLUSTRATED

FIG. ITEM	PART NUMBER	AIRLINE STOCK NUMBER	NOMENCLATURE 1234567		EFF CODE	UNITS PER ASSY
-040E	D2549010401665		. . WALL-SIDE used on 001F SEE 25-41-51-48K FOR DET	NP		001
-040F	D2549010404465		. . WALL-SIDE used on 001J, 001K, 001N SEE 25-41-51-48K FOR DET	NP		001
-040G	D2549030413665		. . WALL-SIDE PRE VSB A2-254-25-045 used on 001L SEE 25-41-51-48L FOR DET	NP		001
-040H	D2549010610665		. . WALL-SIDE used on 001M, 001T SEE 25-41-51-48G FOR DET	NP		001
-040J	R22540119601865		. . WALL-SIDE PRE VSB A2-254-25-130 POST VSB A2-254-25-042 used on 001P, 001Q, 001R SEE 25-41-51-48D FOR DET	NP		001
-040K	R22540119901265		. . WALL-SIDE POST VSB A2-254-25-045 used on 001S SEE 25-41-51-48L FOR DET	NP		001
-040L	R22540119606465		. . WALL-SIDE POST VSB A2-254-25-130 used on 001V, 001W SEE 25-41-51-48D FOR DET	NP		001
050A	D2549020402066		. . HOUSING used on 001A SEE 25-41-51-07Z FOR DET	NP		001

- ITEM NOT ILLUSTRATED

FIG. ITEM	PART NUMBER	AIRLINE STOCK NUMBER	NOMENCLATURE 1234567	EFF CODE	UNITS PER ASSY
-050B	D2549020402666		. . HOUSING NP PRE VSB A2-254-25-130 used on 001B, 001C, 001G, 001P, 001Q, 001R, 001U SEE 25-41-51-07W FOR DET		001
-050C	D2549010401466		. . HOUSING NP used on 001D, 001J SEE 25-41-51-07X FOR DET		001
-050D	D2549020402266		. . HOUSING NP used on 001E, 001H SEE 25-41-51-07X FOR DET		001
-050E	D2549010401666		. . HOUSING NP used on 001F SEE 25-41-51-490 FOR DET		001
-050F	D2549020404066		. . HOUSING NP used on 001K SEE 25-41-51-07W FOR DET		001
-050G	D2549020401266		. . HOUSING NP used on 001L, 001S SEE 25-41-51-07W FOR DET		001
-050H	D2549010403266		. . HOUSING NP used on 001M, 001T SEE 25-41-51-07Z FOR DET		001
-050J	D2547160900266		. . HOUSING NP used on 001N SEE 25-41-51-07W FOR DET		001
-050K	R22540119606466		. . HOUSING NP POST VSB A2-254-25-130 used on 001V, 001W SEE 25-41-51-07W FOR DET		001

- ITEM NOT ILLUSTRATED

FIG. ITEM	PART NUMBER	AIRLINE STOCK NUMBER	NOMENCLATURE 1234567	EFF CODE	UNITS PER ASSY
060A	D2549020401269		. . DOOR INSTL NP used on 001A, 001B, 001C, 001D, 001E, 001F, 001G, 001H, 001J, 001K, 001L, 001M, 001N, 001P, 001Q, 001R, 001S, 001T, 001U, 001V, 001W SEE 25-41-51-10A FOR DET		001
070A	A225400276-942		. . DOOR ASSY-SINGLE used on 001A SEE 25-41-51-11F FOR DET		001
-070B	A225400276-952		. . DOOR ASSY-SINGLE PRE VSB A2-254-25-130 used on 001B, 001G, 001P, 001R, 001U SEE 25-41-51-11G FOR DET		001
-070C	A225400276-946		. . DOOR ASSY-SINGLE used on 001C, 001Q SEE 25-41-51-11G FOR DET		001
-070D	A225400276-562		. . DOOR ASSY-SINGLE used on 001D SEE 25-41-51-11D FOR DET		001
-070E	A225400278-524		. . DOOR ASSY-SINGLE used on 001E, 001H SEE 25-41-51-11K FOR DET		001
-070F	A225400278-808		. . DOOR ASSY-SINGLE used on 001F SEE 25-41-51-11H FOR DET		001
-070G	A225400276-936		. . DOOR ASSY-SINGLE used on 001J SEE 25-41-51-11G FOR DET		001
-070H	A225400278-832		. . DOOR ASSY-SINGLE used on 001K, 001N SEE 25-41-51-11M FOR DET		001

- ITEM NOT ILLUSTRATED

FIG. ITEM	PART NUMBER	AIRLINE STOCK NUMBER	NOMENCLATURE 1234567		EFF CODE	UNITS PER ASSY
-070J	A225400276-960		. . DOOR ASSY-SINGLE used on 001L, 001S SEE 25-41-51-11J FOR DET			001
-070K	A225400276-924		. . DOOR ASSY-SINGLE used on 001M, 001T SEE 25-41-51-11E FOR DET			001
-070L	A225400263-990		. . DOOR ASSY-SINGLE POST VSB A2-254-25-130 used on 001V, 001W SEE 25-41-51-11G FOR DET			001
080A	D2549030410071		. . TOILET UNIT AND TOILET SHROUD used on 001A SEE 25-41-51-12G FOR DET	NP		001
-080B	D2549020811871		. . TOILET UNIT AND TOILET SHROUD PRE VSB A2-254-25-130 used on 001B, 001C, 001E, 001F, 001G, 001H, 001L, 001P, 001Q, 001R, 001S, 001U SEE 25-41-51-12G FOR DET	NP		001
-080C	D2549010401471		. . TOILET UNIT AND TOILET SHROUD used on 001D, 001J, 001K, 001N SEE 25-41-51-12G FOR DET	NP		001
-080D	D2549010610671		. . TOILET UNIT AND TOILET SHROUD used on 001M, 001T SEE 25-41-51-12G FOR DET	NP		001
-080E	R22540119605871		. . TOILET UNIT AND TOILET SHROUD POST VSB A2-254-25-130 used on 001V, 001W SEE 25-41-51-12G FOR DET	NP		001

- ITEM NOT ILLUSTRATED

FIG. ITEM	PART NUMBER	AIRLINE STOCK NUMBER	NOMENCLATURE 1234567	EFF CODE	UNITS PER ASSY
090A	D2549020402072		. . PAN-FLOOR NP used on 001A SEE 25-41-51-13S FOR DET		001
-090B	D2549020407072		. . PAN-FLOOR NP PRE VSB A2-254-25-130 used on 001B, 001C, 001P, 001Q, 001U SEE 25-41-51-13P FOR DET		001
-090C	D2549010401472		. . PAN-FLOOR NP used on 001D, 001J, 001K, 001N SEE 25-41-51-13Q FOR DET		001
-090D	D2549020402272		. . PAN-FLOOR NP used on 001E, 001H SEE 25-41-51-13N FOR DET		001
-090E	D2549010401672		. . PAN-FLOOR NP used on 001F SEE 25-41-51-13Q FOR DET		001
-090F	D2549020409072		. . PAN-FLOOR NP PRE VSB A2-254-25-130 used on 001G, 001R SEE 25-41-51-13Q FOR DET		001
-090G	D2549030700472		. . PAN-FLOOR NP used on 001L, 001S SEE 25-41-51-13S FOR DET		001
-090H	D2549010404672		. . PAN-FLOOR NP used on 001M, 001T SEE 25-41-51-13S FOR DET		001
-090J	R22540119606672		. . PAN-FLOOR NP POST VSB A2-254-25-130 used on 001V SEE 25-41-51-13P FOR DET		001

- ITEM NOT ILLUSTRATED

FIG. ITEM	PART NUMBER	AIRLINE STOCK NUMBER	NOMENCLATURE 1234567		EFF CODE	UNITS PER ASSY
-090K	R22540119606872		. . PAN-FLOOR POST VSB A2-254-25-130 used on 001W SEE 25-41-51-13Q FOR DET	NP		001
100A	D2549010512673		. . LIGHT-DOOR PRE VSB A2-254-25-130 used on 001A, 001B, 001C, 001D, 001E, 001G, 001H, 001J, 001K, 001L, 001M, 001N, 001P, 001Q, 001R, 001S, 001T, 001U SEE 25-41-51-140 FOR DET	NP		001
-100B	D2549010514073		. . LIGHT-DOOR used on 001F SEE 25-41-51-14A FOR DET	NP		001
-100C	R22540119604673		. . LIGHT-DOOR POST VSB A2-254-25-130 used on 001V, 001W SEE 25-41-51-14C FOR DET	NP		001
110A	D2549030410074		. . WASHBASIN UNIT used on 001A SEE 25-41-51-15L FOR DET	NP		001
-110B	D2549020402674		. . WASHBASIN UNIT PRE VSB A2-254-25-130 used on 001B, 001C, 001G, 001L, 001P, 001Q, 001R, 001S, 001U SEE 25-41-51-15L FOR DET	NP		001
-110C	D2549010401474		. . WASHBASIN UNIT used on 001D, 001J, 001K, 001N SEE 25-41-51-15N FOR DET	NP		001
-110D	D2549010603274		. . WASHBASIN UNIT used on 001E, 001H, 001M, 001T SEE 25-41-51-15F FOR DET	NP		001

- ITEM NOT ILLUSTRATED

FIG. ITEM	PART NUMBER	AIRLINE STOCK NUMBER	NOMENCLATURE 1234567		EFF CODE	UNITS PER ASSY
-110E	D2549010401674		. . WASHBASIN UNIT used on 001F SEE 25-41-51-15M FOR DET	NP		001
-110F	R22540119606474		. . WASHBASIN UNIT POST VSB A2-254-25-130 used on 001V, 001W SEE 25-41-51-15L FOR DET	NP		001
120A	D2549020607675		. . DOOR ASSY-WASHBASIN UNIT used on 001A SEE 25-41-51-16C FOR DET	NP		001
-120B	D2549030606075		. . DOOR ASSY-WASHBASIN UNIT PRE VSB A2-254-25-130 used on 001B, 001C, 001F, 001L, 001P, 001Q, 001S, 001U SEE 25-41-51-16E FOR DET	NP		001
-120C	D2549030506275		. . DOOR ASSY-WASHBASIN UNIT used on 001D, 001J, 001K, 001N SEE 25-41-51-16C FOR DET	NP		001
-120D	D2549020607075		. . DOOR ASSY-WASHBASIN UNIT PRE VSB A2-254-25-130 used on 001E, 001G, 001H, 001R SEE 25-41-51-16B FOR DET	NP		001
-120E	D2549010510475		. . DOOR ASSY-WASHBASIN UNIT used on 001M, 001T SEE 25-41-51-16B FOR DET	NP		001

- ITEM NOT ILLUSTRATED

FIG. ITEM	PART NUMBER	AIRLINE STOCK NUMBER	NOMENCLATURE 1234567		EFF CODE	UNITS PER ASSY
-120F	R22540119605075		. . DOOR ASSY-WASHBASIN UNIT POST VSB A2-254-25-130 used on 001W SEE 25-41-51-16B FOR DET	NP		001
-120G	R22540119606275		. . DOOR ASSY-WASHBASIN UNIT POST VSB A2-254-25-130 used on 001V SEE 25-41-51-16E FOR DET	NP		001
130A	D2549020607676		. . PANEL ASSY-WASHBASIN UNIT used on 001A SEE 25-41-51-17C FOR DET	NP		001
-130B	D2549030504876		. . PANEL ASSY-WASHBASIN UNIT PRE VSB A2-254-25-130 used on 001B, 001C, 001F, 001G, 001L, 001P, 001Q, 001R, 001S, 001U SEE 25-41-51-17C FOR DET	NP		001
-130C	D2549010514476		. . PANEL ASSY-WASHBASIN UNIT used on 001D SEE 25-41-51-17D FOR DET	NP		001
-130D	D2549030511076		. . PANEL ASSY-WASHBASIN UNIT used on 001E, 001H SEE 25-41-51-17D FOR DET	NP		001
-130E	D2549030506276		. . PANEL ASSY-WASHBASIN UNIT used on 001J, 001K, 001N SEE 25-41-51-17C FOR DET	NP		001

- ITEM NOT ILLUSTRATED

FIG. ITEM	PART NUMBER	AIRLINE STOCK NUMBER	NOMENCLATURE 1234567		EFF CODE	UNITS PER ASSY
-130F	D2549010604876		. . PANEL ASSY-WASHBASIN UNIT used on 001M, 001T SEE 25-41-51-17D FOR DET	NP		001
-130G	R22540119604676		. . PANEL ASSY-WASHBASIN UNIT POST VSB A2-254-25-130 used on 001V, 001W SEE 25-41-51-17C FOR DET	NP		001
140A	D2549010611677		. . BIN-WASTE,CHUTE-WASTE AND EXTINGUISHER-FIRE used on 001A, 001B, 001C, 001D, 001E, 001F, 001G, 001H, 001J, 001K, 001L, 001M, 001N, 001P, 001Q, 001R, 001S, 001T, 001U, 001V, 001W SEE 25-41-51-180 FOR DET	NP		001
150A	D2549030504878		. . CABINET-SERVICE PRE VSB A2-254-25-042 PRE VSB A2-254-25-045 used on 001A, 001B, 001C, 001D, 001E, 001G, 001H, 001L, 001U SEE 25-41-51-19E FOR DET	NP		001
-150B	D2549010514078		. . CABINET-SERVICE used on 001F SEE 25-41-51-19E FOR DET	NP		001
-150C	D2549030504078		. . CABINET-SERVICE used on 001J, 001K, 001M, 001N, 001T SEE 25-41-51-19E FOR DET	NP		001

- ITEM NOT ILLUSTRATED

FIG. ITEM	PART NUMBER	AIRLINE STOCK NUMBER	NOMENCLATURE 1234567	EFF CODE	UNITS PER ASSY
-150D	R22540114200078		. . CABINET-SERVICE NP PRE VSB A2-254-25-130 POST VSB A2-254-25-042 used on 001P, 001Q, 001R SEE 25-41-51-19E FOR DET		001
-150E	R22540119900278		. . CABINET-SERVICE NP POST VSB A2-254-25-045 used on 001S SEE 25-41-51-19E FOR DET		001
-150F	R22540119604678		. . CABINET-SERVICE NP POST VSB A2-254-25-130 used on 001V, 001W SEE 25-41-51-19E FOR DET		001
160A	D2549010510679		. . TABLE-NURSING NP used on 001A, 001E, 001H, 001K, 001L, 001M, 001N, 001S, 001T SEE 25-41-51-20A FOR DET		001
-160B	D2549010512679		. . TABLE-NURSING NP PRE VSB A2-254-25-130 used on 001B, 001C, 001D, 001G, 001J, 001P, 001Q, 001R, 001U SEE 25-41-51-20A FOR DET		001
-160C	D2549010514079		. . TABLE-NURSING NP used on 001F SEE 25-41-51-20A FOR DET		001
-160D	R22540119604679		. . TABLE-NURSING NP POST VSB A2-254-25-130 used on 001V, 001W SEE 25-41-51-20A FOR DET		001

- ITEM NOT ILLUSTRATED

FIG. ITEM	PART NUMBER	AIRLINE STOCK NUMBER	NOMENCLATURE 1234567		EFF CODE	UNITS PER ASSY
170A	D2549020802680		. . VENTILATION SYSTEM PRE VSB A2-254-25-130 used on 001A, 001B, 001C, 001D, 001E, 001F, 001G, 001H, 001J, 001K, 001L, 001M, 001N, 001P, 001Q, 001R, 001S, 001T, 001U SEE 25-41-51-21B FOR DET	NP		001
-170B	R22540119605280		. . VENTILATION SYSTEM POST VSB A2-254-25-130 used on 001V, 001W SEE 25-41-51-21B FOR DET	NP		001
180A	D2549020401281		. . WATER SYSTEM-POTABLE used on 001A, 001B, 001C, 001D, 001G, 001J, 001K, 001L, 001N, 001P, 001Q, 001R, 001S, 001U SEE 25-41-51-22D FOR DET	NP		001
-180B	D2549020805481		. . WATER SYSTEM-POTABLE used on 001E, 001H SEE 25-41-51-22H FOR DET	NP		001
-180C	D2549010401681		. . WATER SYSTEM-POTABLE used on 001F SEE 25-41-51-22E FOR DET	NP		001
-180D	D2549010606481		. . WATER SYSTEM-POTABLE used on 001M, 001T SEE 25-41-51-22F FOR DET	NP		001
-180E	R22540119606481		. . WATER SYSTEM-POTABLE used on 001V, 001W SEE 25-41-51-22D FOR DET	NP		001

- ITEM NOT ILLUSTRATED

FIG. ITEM	PART NUMBER	AIRLINE STOCK NUMBER	NOMENCLATURE 1234567		EFF CODE	UNITS PER ASSY
190A	D2549010511082		. . WATER SYSTEM-WASTE used on 001A, 001B, 001C, 001G, 001M, 001P, 001Q, 001R, 001T, 001U, 001V, 001W SEE 25-41-51-23B FOR DET	NP		001
-190B	D2549030504882		. . WATER SYSTEM-WASTE used on 001D, 001J, 001K, 001N SEE 25-41-51-23B FOR DET	NP		001
-190C	D2549020800882		. . WATER SYSTEM-WASTE used on 001E, 001H, 001L, 001S SEE 25-41-51-23D FOR DET	NP		001
-190D	D2549030614682		. . WATER SYSTEM-WASTE used on 001F SEE 25-41-51-23D FOR DET	NP		001
200A	D2549030410283		. . ELECTRICAL SYSTEM PRE VSB A2-254-25-130 used on 001A, 001B, 001C, 001D, 001G, 001J, 001K, 001L, 001N, 001P, 001Q, 001R, 001S, 001U SEE 25-41-51-26R FOR DET	NP		001
-200B	D2549020402283		. . ELECTRICAL SYSTEM used on 001E, 001H SEE 25-41-51-26R FOR DET	NP		001
-200C	D2549010401683		. . ELECTRICAL SYSTEM used on 001F SEE 25-41-51-26R FOR DET	NP		001
-200D	D2549010610683		. . ELECTRICAL SYSTEM used on 001M, 001T SEE 25-41-51-26R FOR DET	NP		001

- ITEM NOT ILLUSTRATED

FIG. ITEM	PART NUMBER	AIRLINE STOCK NUMBER	NOMENCLATURE 1234567		EFF CODE	UNITS PER ASSY
-200E	R22540119606483		. . ELECTRICAL SYSTEM POST VSB A2-254-25-130 used on 001V, 001W SEE 25-41-51-26R FOR DET	NP		001
210A	D9250000000285		. . ELECTRICAL SYSTEM- COCKPIT DOOR LOCKING used on 001A, 001B, 001C, 001D, 001E, 001F, 001G, 001H, 001J, 001K, 001L, 001M, 001N, 001P, 001Q, 001R, 001S, 001T, 001U, 001V, 001W SEE 25-41-51-31B FOR DET	NP		001

- ITEM NOT ILLUSTRATED

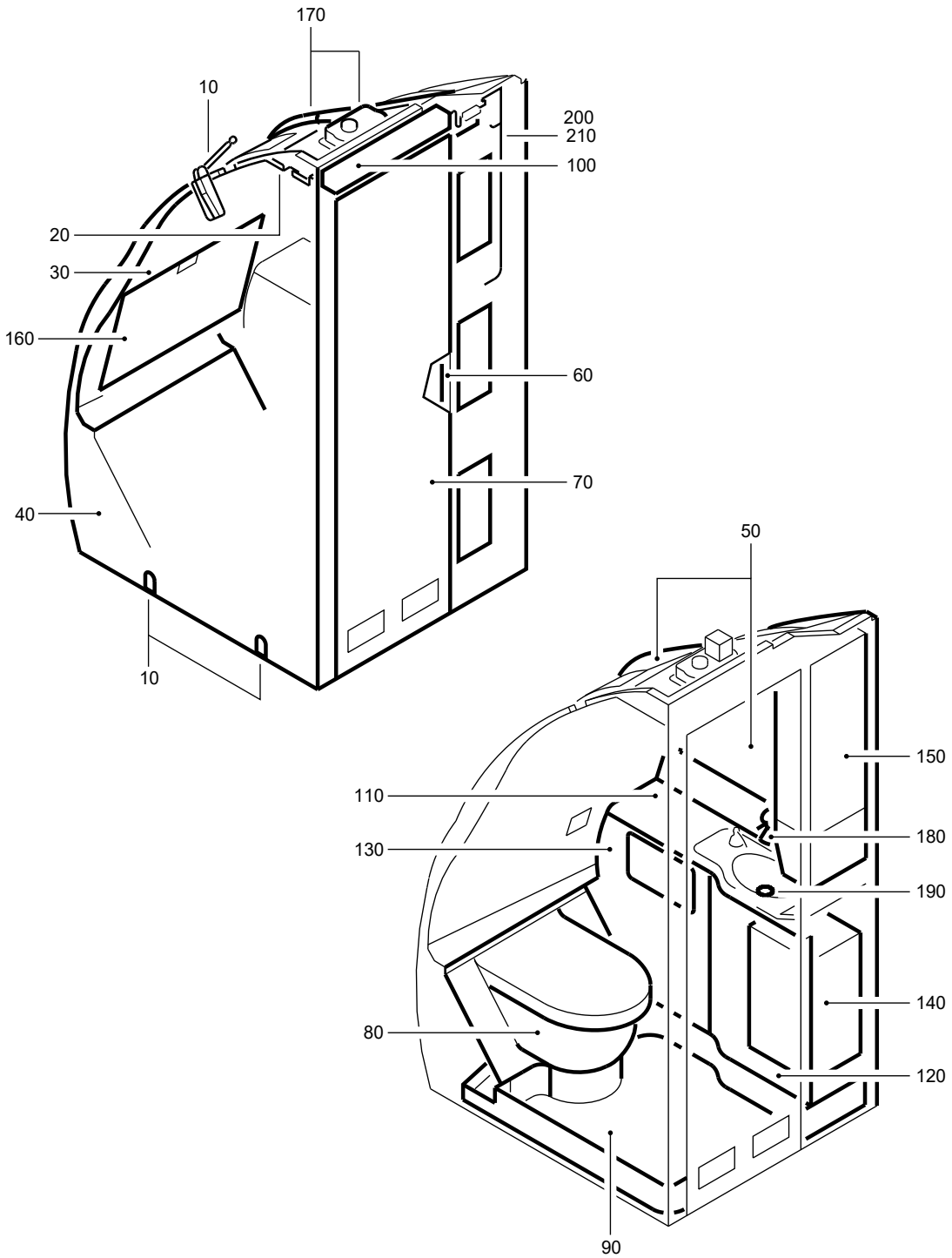

F_PL_254151_42_K_01_00

LAVATORY A ASSY
Figure 42K/EN254151SHEET42K01

FIG. ITEM	PART NUMBER	AIRLINE STOCK NUMBER	NOMENCLATURE 1234567	EFF CODE	UNITS PER ASSY
42K					
-001A	D2549020406800		. LAVATORY A ASSY PRE VSB A2-254-25-080 SEE SIL 25-117 FOR DET		RF
-001B	D2549030410600		. LAVATORY A ASSY SEE SIL 25-117 FOR DET		RF
-001C	D2549020408800		. LAVATORY A ASSY SEE SIL 25-117 FOR DET		RF
-001D	D2549020406600		. LAVATORY A ASSY SEE SIL 25-117 FOR DET		RF
-001E	D2549010402600		. LAVATORY A ASSY VSB A2-254-25-013 SEE SIL 25-117 FOR DET		RF
-001F	D2549020408200		. LAVATORY A ASSY SEE SIL 25-117 FOR DET		RF
-001G	D2549020407200		. LAVATORY A ASSY SEE SIL 25-117 FOR DET		RF
-001H	D2549030410800		. LAVATORY A ASSY SEE SIL 25-117 FOR DET		RF
-001J	D2549040501000		. LAVATORY A ASSY PRE VSB A2-254-25-080 SEE SIL 25-117 FOR DET		RF
-001K	D2549010403200		. LAVATORY A ASSY PRE VSB A2-254-25-047 SEE SIL 25-117 FOR DET		RF
-001L	D2549030411200		. LAVATORY A ASSY SEE SIL 25-117 FOR DET		RF
-001M	D2549020401400		. LAVATORY A ASSY PRE VSB A2-254-25-054 SEE SIL 25-117 FOR DET		RF

- ITEM NOT ILLUSTRATED

FIG. ITEM	PART NUMBER	AIRLINE STOCK NUMBER	NOMENCLATURE 1234567		EFF CODE	UNITS PER ASSY
-001N	D2549020401400		. LAVATORY A ASSY PRE VSB A2-254-25-054 POST SB 25-1473 SEE SIL 25-117 FOR DET			RF
-001P	R225401627-000		. LAVATORY A ASSY POST VSB A2-254-25-054 SEE SIL 25-117 FOR DET			RF
-001Q	R225401627-000		. LAVATORY A ASSY POST VSB A2-254-25-054 SEE SIL 25-117 FOR DET			RF
-001R	R225401646-002		. LAVATORY A ASSY POST VSB A2-254-25-080 SEE SIL 25-117 FOR DET			RF
-001S	R225401673-004		. LAVATORY A ASSY POST VSB A2-254-25-080 SEE SIL 25-117 FOR DET			RF
-001T	R225401685-000		. LAVATORY A ASSY POST VSB A2-254-25-047			RF
010A	D2549010613861		. . ATTACHMENT-LAVATORY used on 001A, 001C, 001D, 001F, 001R SEE 25-41-51-02C FOR DET	NP		001
-010B	D2549020805261		. . ATTACHMENT-LAVATORY used on 001B SEE 25-41-51-02C FOR DET	NP		001
-010C	D2549030514861		. . ATTACHMENT-LAVATORY PRE VSB A2-254-25-013 used on 001E, 001G SEE 25-41-51-02A FOR DET	NP		001
-010D	D2549030410861		. . ATTACHMENT-LAVATORY used on 001H SEE 25-41-51-02D FOR DET	NP		001

- ITEM NOT ILLUSTRATED

FIG. ITEM	PART NUMBER	AIRLINE STOCK NUMBER	NOMENCLATURE 1234567		EFF CODE	UNITS PER ASSY
-010E	D2549040500861		. . ATTACHMENT-LAVATORY used on 001J, 001S SEE 25-41-51-02B FOR DET	NP		001
-010F	D2549020400861		. . ATTACHMENT-LAVATORY used on 001K, 001L, 001M, 001N, 001P, 001Q, 001T SEE 25-41-51-02B FOR DET	NP		001
-010G	D2549030514861		. . ATTACHMENT-LAVATORY POST VSB A2-254-25-013 used on 001E SEE 25-41-51-02A FOR DET	NP		001
020A	D2549030401463		. . PANEL-CEILING used on 001A, 001C, 001D, 001E, 001F, 001G, 001K, 001L, 001M, 001N, 001P, 001Q, 001R, 001T SEE 25-41-51-040 FOR DET	NP		001
-020B	D2549020805263		. . PANEL-CEILING used on 001B SEE 25-41-51-04A FOR DET	NP		001
-020C	D2549030410863		. . PANEL-CEILING used on 001H SEE 25-41-51-04A FOR DET	NP		001
-020D	D2549040500663		. . PANEL-CEILING used on 001J, 001S SEE 25-41-51-04A FOR DET	NP		001
030A	D2549020812264		. . WALL-REAR used on 001A, 001C, 001J, 001R, 001S SEE 25-41-51-05H FOR DET	NP		001
-030B	D2549020805264		. . WALL-REAR used on 001B, 001H SEE 25-41-51-05H FOR DET	NP		001

- ITEM NOT ILLUSTRATED

FIG. ITEM	PART NUMBER	AIRLINE STOCK NUMBER	NOMENCLATURE 1234567	EFF CODE	UNITS PER ASSY
-030C	D2549020805464		. . WALL-REAR NP used on 001D SEE 25-41-51-05H FOR DET		001
-030D	D2549010400864		. . WALL-REAR NP used on 001E, 001G, 001L SEE 25-41-51-05J FOR DET		001
-030E	D2549030406464		. . WALL-REAR NP used on 001F, 001K, 001M, 001N, 001P, 001Q, 001T SEE 25-41-51-05F FOR DET		001
040A	D2549020406865		. . WALL-SIDE NP PRE VSB A2-254-25-080 used on 001A SEE 25-41-51-48H FOR DET		001
-040B	D2549030410665		. . WALL-SIDE NP used on 001B SEE 25-41-51-48H FOR DET		001
-040C	D2549020408865		. . WALL-SIDE NP used on 001C SEE 25-41-51-48H FOR DET		001
-040D	D2549020406665		. . WALL-SIDE NP used on 001D, 001L SEE 25-41-51-48H FOR DET		001
-040E	D2549010400065		. . WALL-SIDE NP PRE VSB A2-254-25-013 used on 001E SEE 25-41-51-48D FOR DET		001
-040F	D2549020408265		. . WALL-SIDE NP used on 001F SEE 25-41-51-48G FOR DET		001

- ITEM NOT ILLUSTRATED

FIG. ITEM	PART NUMBER	AIRLINE STOCK NUMBER	NOMENCLATURE 1234567		EFF CODE	UNITS PER ASSY
-040G	D2549020407265		. . WALL-SIDE used on 001G SEE 25-41-51-48H FOR DET	NP		001
-040H	D2549030410865		. . WALL-SIDE used on 001H SEE 25-41-51-48A FOR DET	NP		001
-040J	D2549040501065		. . WALL-SIDE PRE VSB A2-254-25-080 used on 001J SEE 25-41-51-48A FOR DET	NP		001
-040K	D2549010610665		. . WALL-SIDE used on 001K, 001T SEE 25-41-51-48G FOR DET	NP		001
-040L	D2549020401465		. . WALL-SIDE PRE VSB A2-254-25-054 used on 001M, 001N SEE 25-41-51-48H FOR DET	NP		001
-040M	D2549010400065		. . WALL-SIDE POST VSB A2-254-25-013 used on 001E SEE 25-41-51-48D FOR DET	NP		001
-040N	R22540162700065		. . WALL-SIDE POST VSB A2-254-25-054 used on 001P, 001Q SEE 25-41-51-48H FOR DET	NP		001
-040P	R22540164600265		. . WALL-SIDE POST VSB A2-254-25-080 used on 001R SEE 25-41-51-48H FOR DET	NP		001
-040Q	R22540167300465		. . WALL-SIDE POST VSB A2-254-25-080 used on 001S SEE 25-41-51-48A FOR DET	NP		001

- ITEM NOT ILLUSTRATED

FIG. ITEM	PART NUMBER	AIRLINE STOCK NUMBER	NOMENCLATURE 1234567		EFF CODE	UNITS PER ASSY
050A	D2549020406866		. . HOUSING used on 001A, 001R SEE 25-41-51-07Z FOR DET	NP		001
-050B	D2549030410666		. . HOUSING used on 001B SEE 25-41-51-07Z FOR DET	NP		001
-050C	D2549020408866		. . HOUSING used on 001C SEE 25-41-51-07Z FOR DET	NP		001
-050D	D2549020406666		. . HOUSING used on 001D, 001L SEE 25-41-51-07X FOR DET	NP		001
-050E	D2549010400066		. . HOUSING PRE VSB A2-254-25-013 used on 001E SEE 25-41-51-07V FOR DET	NP		001
-050F	D2549020408266		. . HOUSING used on 001F SEE 25-41-51-07Z FOR DET	NP		001
-050G	D2549020402266		. . HOUSING used on 001G SEE 25-41-51-07X FOR DET	NP		001
-050H	D2549030410866		. . HOUSING used on 001H SEE 25-41-51-07Z FOR DET	NP		001
-050J	D2549040500866		. . HOUSING used on 001J, 001S SEE 25-41-51-07X FOR DET	NP		001
-050K	D2549010403266		. . HOUSING used on 001K, 001T SEE 25-41-51-07Z FOR DET	NP		001

- ITEM NOT ILLUSTRATED

FIG. ITEM	PART NUMBER	AIRLINE STOCK NUMBER	NOMENCLATURE 1234567		EFF CODE	UNITS PER ASSY
-050L	D2549020401466		. . HOUSING used on 001M, 001P SEE 25-41-51-07Z FOR DET	NP		001
-050M	D2549020401466		. . HOUSING POST SB 25-1473 used on 001N, 001Q SEE 25-41-51-49C FOR DET	NP		001
-050N	D2549010400066		. . HOUSING POST VSB A2-254-25-013 used on 001E SEE 25-41-51-07V FOR DET	NP		001
060A	D2549020401269		. . DOOR INSTL used on 001A, 001B, 001C, 001D, 001E, 001F, 001G, 001H, 001J, 001K, 001L, 001M, 001N, 001P, 001Q, 001R, 001S, 001T SEE 25-41-51-10A FOR DET	NP		001
070A	A225400276-934		. . DOOR ASSY-SINGLE used on 001A, 001J, 001R, 001S SEE 25-41-51-11F FOR DET			001
-070B	A225400278-866		. . DOOR ASSY-SINGLE used on 001B SEE 25-41-51-11P FOR DET			001
-070C	A225400278-800		. . DOOR ASSY-SINGLE used on 001C SEE 25-41-51-11H FOR DET			001
-070D	A225400276-946		. . DOOR ASSY-SINGLE used on 001D, 001L SEE 25-41-51-11G FOR DET			001
-070E	A2254002768578		. . DOOR ASSY-SINGLE used on 001E SEE 25-41-51-11N FOR DET			001

- ITEM NOT ILLUSTRATED

FIG. ITEM	PART NUMBER	AIRLINE STOCK NUMBER	NOMENCLATURE 1234567	EFF CODE	UNITS PER ASSY
-070F	A225400278-830		. . DOOR ASSY-SINGLE used on 001F SEE 25-41-51-11M FOR DET		001
-070G	A225400278-524		. . DOOR ASSY-SINGLE used on 001G SEE 25-41-51-11K FOR DET		001
-070H	A225400278-518		. . DOOR ASSY-SINGLE used on 001H SEE 25-41-51-11K FOR DET		001
-070J	A225400276-924		. . DOOR ASSY-SINGLE used on 001K, 001T SEE 25-41-51-11E FOR DET		001
-070K	A225400278-824		. . DOOR ASSY-SINGLE used on 001M, 001N, 001P, 001Q SEE 25-41-51-11H FOR DET		001
080A	D2549020811871		. . TOILET UNIT AND TOILET SHROUD NP used on 001A, 001C, 001D, 001F, 001G, 001J, 001L, 001M, 001N, 001P, 001Q, 001R, 001S SEE 25-41-51-12G FOR DET		001
-080B	D2549030410671		. . TOILET UNIT AND TOILET SHROUD NP used on 001B, 001H SEE 25-41-51-12G FOR DET		001
-080C	D2549010607071		. . TOILET UNIT AND TOILET SHROUD NP used on 001E SEE 25-41-51-12D FOR DET		001
-080D	D2549010610671		. . TOILET UNIT AND TOILET SHROUD NP used on 001K, 001T SEE 25-41-51-12G FOR DET		001

- ITEM NOT ILLUSTRATED

FIG. ITEM	PART NUMBER	AIRLINE STOCK NUMBER	NOMENCLATURE 1234567		EFF CODE	UNITS PER ASSY
090A	D2549020406872		. . PAN-FLOOR used on 001A, 001R SEE 25-41-51-13P FOR DET	NP		001
-090B	D2549030410672		. . PAN-FLOOR used on 001B SEE 25-41-51-13P FOR DET	NP		001
-090C	D2549020408872		. . PAN-FLOOR used on 001C SEE 25-41-51-13Q FOR DET	NP		001
-090D	D2549030410072		. . PAN-FLOOR used on 001D, 001L SEE 25-41-51-13N FOR DET	NP		001
-090E	D2549010514272		. . PAN-FLOOR used on 001E SEE 25-41-51-13T FOR DET	NP		001
-090F	D2549030409672		. . PAN-FLOOR used on 001F SEE 25-41-51-13N FOR DET	NP		001
-090G	D2549020402272		. . PAN-FLOOR used on 001G SEE 25-41-51-13N FOR DET	NP		001
-090H	D2549030410872		. . PAN-FLOOR used on 001H SEE 25-41-51-13Q FOR DET	NP		001
-090J	D2549040500872		. . PAN-FLOOR used on 001J, 001S SEE 25-41-51-13P FOR DET	NP		001
-090K	D2549010610672		. . PAN-FLOOR used on 001K, 001T SEE 25-41-51-13P FOR DET	NP		001

- ITEM NOT ILLUSTRATED

FIG. ITEM	PART NUMBER	AIRLINE STOCK NUMBER	NOMENCLATURE 1234567	EFF CODE	UNITS PER ASSY
-090L	D2549020400672		. . PAN-FLOOR NP used on 001M, 001N, 001P, 001Q SEE 25-41-51-13N FOR DET		001
100A	D2549010512673		. . LIGHT-DOOR NP used on 001A, 001C, 001D, 001E, 001F, 001G, 001K, 001L, 001M, 001N, 001P, 001Q, 001R, 001T SEE 25-41-51-140 FOR DET		001
-100B	D2549020710073		. . LIGHT-DOOR NP used on 001B SEE 25-41-51-14A FOR DET		001
-100C	D2549030410873		. . LIGHT-DOOR NP used on 001H SEE 25-41-51-14B FOR DET		001
-100D	D2549040500273		. . LIGHT-DOOR NP used on 001J, 001S SEE 25-41-51-14A FOR DET		001
110A	D2549040500674		. . WASHBASIN UNIT NP used on 001A, 001J, 001R, 001S SEE 25-41-51-15L FOR DET		001
-110B	D2549020404074		. . WASHBASIN UNIT NP used on 001B SEE 25-41-51-15L FOR DET		001
-110C	D2549030410074		. . WASHBASIN UNIT NP used on 001C, 001D, 001H, 001L SEE 25-41-51-15L FOR DET		001
-110D	D2549020704674		. . WASHBASIN UNIT NP used on 001E SEE 25-41-51-15G FOR DET		001

- ITEM NOT ILLUSTRATED

FIG. ITEM	PART NUMBER	AIRLINE STOCK NUMBER	NOMENCLATURE 1234567	EFF CODE	UNITS PER ASSY
-110E	D2549020408274		. . WASHBASIN UNIT NP used on 001F SEE 25-41-51-15L FOR DET		001
-110F	D2549010603274		. . WASHBASIN UNIT NP used on 001G SEE 25-41-51-15F FOR DET		001
-110G	D2549020404074		. . WASHBASIN UNIT NP used on 001M, 001N, 001P, 001Q SEE 25-41-51-15L FOR DET		001
-110H	D2549010404674		. . WASHBASIN UNIT NP used on 001K, 001T SEE 25-41-51-15M FOR DET		001
120A	D2549020607075		. . DOOR ASSY-WASHBASIN UNIT NP used on 001A, 001C, 001D, 001L, 001R SEE 25-41-51-16B FOR DET		001
-120B	D2549020710075		. . DOOR ASSY-WASHBASIN UNIT NP used on 001B SEE 25-41-51-16C FOR DET		001
-120C	D2549030606075		. . DOOR ASSY-WASHBASIN UNIT NP used on 001E, 001F, 001G, 001J, 001S SEE 25-41-51-16E FOR DET		001
-120D	D2549020510675		. . DOOR ASSY-WASHBASIN UNIT NP used on 001H SEE 25-41-51-16D FOR DET		001

- ITEM NOT ILLUSTRATED

FIG. ITEM	PART NUMBER	AIRLINE STOCK NUMBER	NOMENCLATURE 1234567	EFF CODE	UNITS PER ASSY
-120E	D2549010510475		. . DOOR ASSY-WASHBASIN UNIT NP used on 001K, 001T SEE 25-41-51-16B FOR DET		001
-120F	D2549020802875		. . DOOR ASSY-WASHBASIN UNIT NP used on 001M, 001N, 001P, 001Q SEE 25-41-51-16D FOR DET		001
130A	D2549030504876		. . PANEL ASSY-WASHBASIN UNIT NP used on 001A, 001C, 001D, 001E, 001F, 001J, 001L, 001M, 001N, 001P, 001Q, 001R, 001S SEE 25-41-51-17C FOR DET		001
-130B	D2549020710076		. . PANEL ASSY-WASHBASIN UNIT NP used on 001B, 001H SEE 25-41-51-17D FOR DET		001
-130C	D2549030511076		. . PANEL ASSY-WASHBASIN UNIT NP used on 001G SEE 25-41-51-17D FOR DET		001
-130D	D2549010604876		. . PANEL ASSY-WASHBASIN UNIT NP used on 001K, 001T SEE 25-41-51-17D FOR DET		001
140A	D2549010611677		. . BIN-WASTE,CHUTE-WASTE AND EXTINGUISHER-FIRE NP used on 001A, 001B, 001C, 001D, 001E, 001F, 001G, 001H, 001J, 001K, 001L, 001M, 001N, 001P, 001Q, 001R, 001S, 001T SEE 25-41-51-180 FOR DET		001

- ITEM NOT ILLUSTRATED

FIG. ITEM	PART NUMBER	AIRLINE STOCK NUMBER	NOMENCLATURE 1234567	EFF CODE	UNITS PER ASSY
150A	D2549030504878		. . CABINET-SERVICE NP PRE VSB A2-254-25-013 PRE VSB A2-254-25-054 PRE VSB A2-254-25-080 used on 001A, 001E, 001F, 001G, 001J, 001M, 001N SEE 25-41-51-19E FOR DET		001
-150B	D2549020710078		. . CABINET-SERVICE NP used on 001B SEE 25-41-51-19F FOR DET		001
-150C	D2549030504078		. . CABINET-SERVICE NP used on 001C, 001D, 001K, 001L, 001T SEE 25-41-51-19E FOR DET		001
-150D	D2549020510678		. . CABINET-SERVICE NP used on 001H SEE 25-41-51-19F FOR DET		001
-150E	D2549030504878		. . CABINET-SERVICE NP POST VSB A2-254-25-013 used on 001E SEE 25-41-51-19E FOR DET		001
-150F	R22540119500078		. . CABINET-SERVICE NP POST VSB A2-254-25-054 used on 001P, 001Q SEE 25-41-51-19E FOR DET		001
-150G	R22540114500278		. . CABINET-SERVICE NP POST VSB A2-254-25-080 used on 001R, 001S SEE 25-41-51-19E FOR DET		001

- ITEM NOT ILLUSTRATED

FIG. ITEM	PART NUMBER	AIRLINE STOCK NUMBER	NOMENCLATURE 1234567		EFF CODE	UNITS PER ASSY
160A	D2549010510679		. . TABLE-NURSING used on 001A, 001C, 001D, 001E, 001F, 001G, 001J, 001K, 001L, 001M, 001N, 001P, 001Q, 001R, 001S, 001T SEE 25-41-51-20A FOR DET	NP		001
-160B	D2549020710079		. . TABLE-NURSING used on 001B SEE 25-41-51-20B FOR DET	NP		001
-160C	D2549020510679		. . TABLE-NURSING used on 001H SEE 25-41-51-20B FOR DET	NP		001
170A	D2549020802680		. . VENTILATION SYSTEM used on 001A, 001C, 001D, 001E, 001F, 001G, 001J, 001K, 001L, 001M, 001N, 001P, 001Q, 001R, 001S, 001T SEE 25-41-51-21B FOR DET	NP		001
-170B	D2549020510680		. . VENTILATION SYSTEM used on 001B, 001H SEE 25-41-51-21B FOR DET	NP		001
180A	D2549020401281		. . WATER SYSTEM-POTABLE used on 001A, 001B, 001D, 001F, 001H, 001J, 001L, 001M, 001N, 001P, 001Q, 001R, 001S SEE 25-41-51-22D FOR DET	NP		001
-180B	D2549030410081		. . WATER SYSTEM-POTABLE used on 001C SEE 25-41-51-22G FOR DET	NP		001
-180C	D2549010606081		. . WATER SYSTEM-POTABLE used on 001E SEE 25-41-51-22D FOR DET	NP		001

- ITEM NOT ILLUSTRATED

FIG. ITEM	PART NUMBER	AIRLINE STOCK NUMBER	NOMENCLATURE 1234567	EFF CODE	UNITS PER ASSY
-180D	D2549020805481		. . WATER SYSTEM-POTABLE NP used on 001G SEE 25-41-51-22H FOR DET		001
-180E	D2549010606481		. . WATER SYSTEM-POTABLE NP used on 001K, 001T SEE 25-41-51-22F FOR DET		001
190A	D2549020800882		. . WATER SYSTEM-WASTE NP used on 001A, 001D, 001H, 001L, 001R SEE 25-41-51-23D FOR DET		001
-190B	D2549030614682		. . WATER SYSTEM-WASTE NP used on 001B, 001M, 001N, 001P, 001Q SEE 25-41-51-23D FOR DET		001
-190C	D2549030405082		. . WATER SYSTEM-WASTE NP used on 001C, 001G SEE 25-41-51-23B FOR DET		001
-190D	D2549030504882		. . WATER SYSTEM-WASTE NP used on 001E, 001F SEE 25-41-51-23B FOR DET		001
-190E	D2549010511082		. . WATER SYSTEM-WASTE NP used on 001J, 001K, 001S, 001T SEE 25-41-51-23B FOR DET		001
200A	D2549020406883		. . ELECTRICAL SYSTEM NP used on 001A, 001R SEE 25-41-51-26R FOR DET		001
-200B	D2549030410283		. . ELECTRICAL SYSTEM NP used on 001B, 001C, 001D, 001L, 001M, 001N, 001P SEE 25-41-51-26R FOR DET		001

- ITEM NOT ILLUSTRATED

FIG. ITEM	PART NUMBER	AIRLINE STOCK NUMBER	NOMENCLATURE 1234567		EFF CODE	UNITS PER ASSY
-200C	D2549030408283		. . ELECTRICAL SYSTEM used on 001E SEE 25-41-51-26P FOR DET	NP		001
-200D	D2549020400883		. . ELECTRICAL SYSTEM used on 001F SEE 25-41-51-26R FOR DET	NP		001
-200E	D2549020402283		. . ELECTRICAL SYSTEM used on 001G SEE 25-41-51-26R FOR DET	NP		001
-200F	D2549030409683		. . ELECTRICAL SYSTEM used on 001H SEE 25-41-51-26S FOR DET	NP		001
-200G	D2549040500683		. . ELECTRICAL SYSTEM used on 001J, 001S SEE 25-41-51-26Q FOR DET	NP		001
-200H	D2549010610683		. . ELECTRICAL SYSTEM used on 001K, 001T SEE 25-41-51-26R FOR DET	NP		001
210A	D9250000000285		. . ELECTRICAL SYSTEM- COCKPIT DOOR LOCKING used on 001A, 001B, 001C, 001D, 001F, 001G, 001H, 001K, 001L, 001R, 001T SEE 25-41-51-31B FOR DET	NP		001
-210B	D9250000000185		. . ELECTRICAL SYSTEM- COCKPIT DOOR LOCKING used on 001E SEE 25-41-51-31A FOR DET	NP		001
-210C	D9250000000385		. . ELECTRICAL SYSTEM- COCKPIT DOOR LOCKING used on 001J, 001S SEE 25-41-51-31C FOR DET	NP		001

- ITEM NOT ILLUSTRATED

FIG. ITEM	PART NUMBER	AIRLINE STOCK NUMBER	NOMENCLATURE 1234567	EFF CODE	UNITS PER ASSY
-210D	D9250000000585		. . ELECTRICAL SYSTEM- COCKPIT DOOR LOCKING NP used on 001M, 001N, 001P, 001Q SEE 25-41-51-31C FOR DET		001

- ITEM NOT ILLUSTRATED

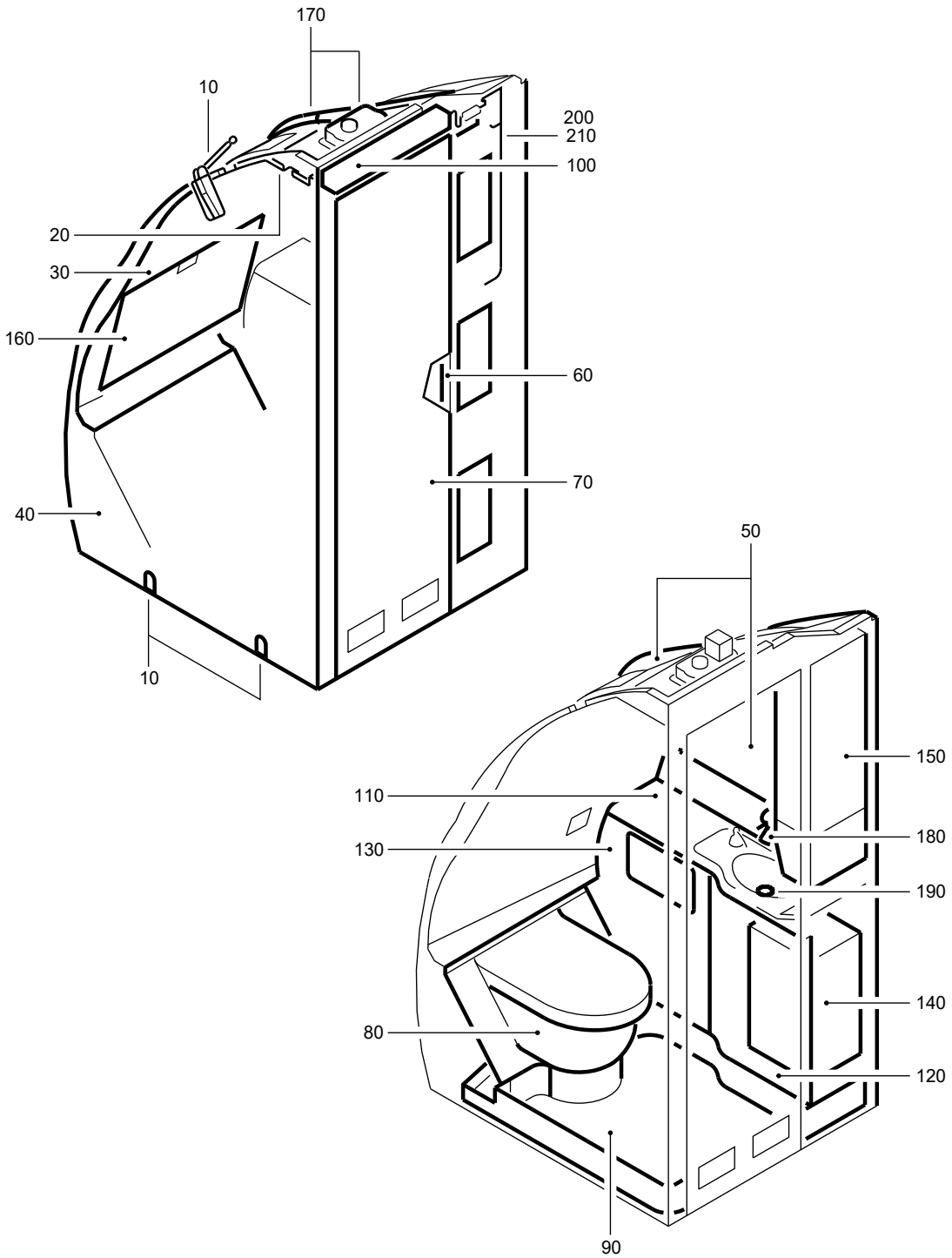

F_PL_254151_42_L_01_00

LAVATORY A ASSY
Figure 42L/EN254151SHEET42L01

FIG. ITEM	PART NUMBER	AIRLINE STOCK NUMBER	NOMENCLATURE 1234567	EFF CODE	UNITS PER ASSY
42L					
-001A	D2549030412400		. LAVATORY A ASSY PRE VSB A2-254-25-064 SEE SIL 25-117 FOR DET		RF
-001B	D2549020402400		. LAVATORY A ASSY SEE SIL 25-117 FOR DET		RF
-001C	D2549030411800		. LAVATORY A ASSY SEE SIL 25-117 FOR DET		RF
-001D	D2549030412200		. LAVATORY A ASSY SEE SIL 25-117 FOR DET		RF
-001E	D2549020408600		. LAVATORY A ASSY PRE VSB A2-254-25-015 SEE SIL 25-117 FOR DET		RF
-001F	D2549030412600		. LAVATORY A ASSY PRE VSB A2-254-25-045 SEE SIL 25-117 FOR DET		RF
-001G	D2549020409200		. LAVATORY A ASSY SEE SIL 25-117 FOR DET		RF
-001H	D2549030412800		. LAVATORY A ASSY PRE VSB A2-254-25-106 SEE SIL 25-117 FOR DET		RF
-001J	D2549030411600		. LAVATORY A ASSY SEE SIL 25-117 FOR DET		RF
-001K	D2549020804400		. LAVATORY A ASSY SEE SIL 25-117 FOR DET PRE VSB A2-254-25-125		RF
-001L	D2549030414200		. LAVATORY A ASSY SEE SIL 25-117 FOR DET		RF
-001M	D2549010403400		. LAVATORY A ASSY SEE SIL 25-117 FOR DET		RF

- ITEM NOT ILLUSTRATED

FIG. ITEM	PART NUMBER	AIRLINE STOCK NUMBER	NOMENCLATURE 1234567		EFF CODE	UNITS PER ASSY
-001N	R225401688-000		. LAVATORY A ASSY POST VSB A2-254-25-015 SEE SIL 25-117 FOR DET			RF
-001P	R225401611-014		. LAVATORY A ASSY POST VSB A2-254-25-045 SEE SIL 25-117 FOR DET			RF
-001Q	R225401648-006		. LAVATORY A ASSY POST VSB A2-254-25-064			RF
-001R	R225401689-004		. LAVATORY A ASSY POST VSB A2-254-25-106			RF
-001S	R225401602-000		. LAVATORY A ASSY POST VSB A2-254-25-125			RF
010A	D2549010613861		. . ATTACHMENT-LAVATORY used on 001A, 001B, 001C, 001E, 001J, 001K, 001M, 001N, 001Q, 001S SEE 25-41-51-02C FOR DET	NP		001
-010B	D2549030408261		. . ATTACHMENT-LAVATORY used on 001D SEE 25-41-51-02C FOR DET	NP		001
-010C	D2549020400861		. . ATTACHMENT-LAVATORY PRE VSB A2-254-25-106 used on 001F, 001G, 001H, 001P SEE 25-41-51-02B FOR DET	NP		001
-010D	D2549030410861		. . ATTACHMENT-LAVATORY used on 001L SEE 25-41-51-02D FOR DET	NP		001
-010E	R22540168900461		. . ATTACHMENT-LAVATORY POST VSB A2-254-25-106 used on 001R SEE 25-41-51-02B FOR DET	NP		001

- ITEM NOT ILLUSTRATED

FIG. ITEM	PART NUMBER	AIRLINE STOCK NUMBER	NOMENCLATURE 1234567		EFF CODE	UNITS PER ASSY
020A	D2549030401463		. . PANEL-CEILING PRE VSB A2-254-25-106 used on 001A, 001B, 001C, 001E, 001F, 001G, 001H, 001J, 001K, 001M, 001N, 001P, 001Q, 001S SEE 25-41-51-040 FOR DET	NP		001
-020B	D2549030408263		. . PANEL-CEILING used on 001D SEE 25-41-51-04A FOR DET	NP		001
-020C	D2549030410863		. . PANEL-CEILING used on 001L SEE 25-41-51-04A FOR DET	NP		001
-020D	R22540166200063		. . PANEL-CEILING POST VSB A2-254-25-106 used on 001R SEE 25-41-51-040 FOR DET	NP		001
030A	D2549030406464		. . WALL-REAR PRE VSB A2-254-25-106 used on 001A, 001C, 001H, 001M, 001Q SEE 25-41-51-05F FOR DET	NP		001
-030B	D2549020805464		. . WALL-REAR used on 001B, 001E, 001F, 001G, 001J, 001K, 001N, 001P, 001S SEE 25-41-51-05H FOR DET	NP		001
-030C	D2549030408264		. . WALL-REAR used on 001D SEE 25-41-51-05J FOR DET	NP		001
-030D	D2549020805264		. . WALL-REAR used on 001L SEE 25-41-51-05H FOR DET	NP		001

- ITEM NOT ILLUSTRATED

FIG. ITEM	PART NUMBER	AIRLINE STOCK NUMBER	NOMENCLATURE 1234567		EFF CODE	UNITS PER ASSY
-030E	R22540166200064		. . WALL-REAR POST VSB A2-254-25-106 used on 001R SEE 25-41-51-05F FOR DET	NP		001
040A	D2549030411465		. . WALL-SIDE used on 001A, 001Q SEE 25-41-51-48D FOR DET	NP		001
-040B	D2549020402465		. . WALL-SIDE used on 001B SEE 25-41-51-48H FOR DET	NP		001
-040C	D2549030411865		. . WALL-SIDE used on 001C SEE 25-41-51-48J FOR DET	NP		001
-040D	D2549030412265		. . WALL-SIDE used on 001D SEE 25-41-51-48H FOR DET	NP		001
-040E	D2549020408665		. . WALL-SIDE used on 001E, 001N SEE 25-41-51-48H FOR DET	NP		001
-040F	D2549030412665		. . WALL-SIDE PRE VSB A2-254-25-045 used on 001F SEE 25-41-51-48H FOR DET	NP		001
-040G	D2549020409265		. . WALL-SIDE used on 001G SEE 25-41-51-48K FOR DET	NP		001
-040H	D2549030412865		. . WALL-SIDE PRE VSB A2-254-25-106 used on 001H SEE 25-41-51-48K FOR DET	NP		001

- ITEM NOT ILLUSTRATED

FIG. ITEM	PART NUMBER	AIRLINE STOCK NUMBER	NOMENCLATURE 1234567		EFF CODE	UNITS PER ASSY
-040J	D2549030411665		. . WALL-SIDE used on 001J SEE 25-41-51-48J FOR DET	NP		001
-040K	D2549020804465		. . WALL-SIDE used on 001K, 001S SEE 25-41-51-48K FOR DET	NP		001
-040L	D2549030410865		. . WALL-SIDE used on 001L SEE 25-41-51-48A FOR DET	NP		001
-040M	D2549020403265		. . WALL-SIDE used on 001M SEE 25-41-51-48G FOR DET	NP		001
-040N	R22540161101465		. . WALL-SIDE POST VSB A2-254-25-045 used on 001P SEE 25-41-51-48H FOR DET	NP		001
-040P	R22540168900465		. . WALL-SIDE POST VSB A2-254-25-106 used on 001R SEE 25-41-51-48K FOR DET	NP		001
050A	D2549020401266		. . HOUSING used on 001A, 001F, 001P, 001Q SEE 25-41-51-07W FOR DET	NP		001
-050B	D2549020402466		. . HOUSING used on 001B SEE 25-41-51-07Z FOR DET	NP		001
-050C	D2549020402066		. . HOUSING used on 001C, 001J, 001K, 001S SEE 25-41-51-07Z FOR DET	NP		001
-050D	D2549030412266		. . HOUSING used on 001D SEE 25-41-51-07Z FOR DET	NP		001

- ITEM NOT ILLUSTRATED

FIG. ITEM	PART NUMBER	AIRLINE STOCK NUMBER	NOMENCLATURE 1234567	EFF CODE	UNITS PER ASSY
-050E	D2549020404066		. . HOUSING NP used on 001E, 001N SEE 25-41-51-07W FOR DET		001
-050F	D2549020409266		. . HOUSING NP used on 001G SEE 25-41-51-07Z FOR DET		001
-050G	D2549010402266		. . HOUSING NP PRE VSB A2-254-25-106 used on 001H SEE 25-41-51-07X FOR DET		001
-050H	D2549030410866		. . HOUSING NP used on 001L SEE 25-41-51-07Z FOR DET		001
-050J	D2549020403266		. . HOUSING NP used on 001M SEE 25-41-51-07X FOR DET		001
-050K	R22540168900466		. . HOUSING NP POST VSB A2-254-25-106 used on 001R SEE 25-41-51-07X FOR DET		001
060A	D2549020401269		. . DOOR INSTL NP used on 001A, 001B, 001C, 001D, 001E, 001F, 001G, 001H, 001J, 001K, 001L, 001M, 001N, 001P, 001Q, 001R, 001S SEE 25-41-51-10A FOR DET		001
070A	A225400276-514		. . DOOR ASSY-SINGLE used on 001A, 001Q SEE 25-41-51-11D FOR DET		001
-070B	A225400278-516		. . DOOR ASSY-SINGLE used on 001B, 001C SEE 25-41-51-11K FOR DET		001

- ITEM NOT ILLUSTRATED

FIG. ITEM	PART NUMBER	AIRLINE STOCK NUMBER	NOMENCLATURE 1234567	EFF CODE	UNITS PER ASSY
-070C	A225400278-828		. . DOOR ASSY-SINGLE used on 001D SEE 25-41-51-11M FOR DET		001
-070D	A225400278-514		. . DOOR ASSY-SINGLE used on 001E, 001N SEE 25-41-51-11H FOR DET		001
-070E	A225400276-960		. . DOOR ASSY-SINGLE used on 001F, 001P SEE 25-41-51-11J FOR DET		001
-070F	A225400276-596		. . DOOR ASSY-SINGLE used on 001G SEE 25-41-51-11G FOR DET		001
-070G	A225400278-834		. . DOOR ASSY-SINGLE PRE VSB A2-254-25-106 used on 001H SEE 25-41-51-11M FOR DET		001
-070H	A225400276-574		. . DOOR ASSY-SINGLE used on 001J SEE 25-41-51-11E FOR DET		001
-070J	A225400278-502		. . DOOR ASSY-SINGLE used on 001K, 001S SEE 25-41-51-11H FOR DET		001
-070K	A225400278-518		. . DOOR ASSY-SINGLE used on 001L SEE 25-41-51-11K FOR DET		001
-070L	A225400276-966		. . DOOR ASSY-SINGLE used on 001M SEE 25-41-51-11J FOR DET		001
-070M	A225400278-928		. . DOOR ASSY-SINGLE POST VSB A2-254-25-106 used on 001R SEE 25-41-51-11M FOR DET		001

- ITEM NOT ILLUSTRATED

FIG. ITEM	PART NUMBER	AIRLINE STOCK NUMBER	NOMENCLATURE 1234567	EFF CODE	UNITS PER ASSY
080A	D2549030412471		. . TOILET UNIT AND TOILET SHROUD NP used on 001A, 001Q SEE 25-41-51-12G FOR DET		001
-080B	D2549020811871		. . TOILET UNIT AND TOILET SHROUD NP PRE VSB A2-254-25-106 used on 001B, 001C, 001E, 001F, 001H, 001J, 001N, 001P SEE 25-41-51-12G FOR DET		001
-080C	D2549030412271		. . TOILET UNIT AND TOILET SHROUD NP used on 001D SEE 25-41-51-12H FOR DET		001
-080D	D2549010401071		. . TOILET UNIT AND TOILET SHROUD NP used on 001G SEE 25-41-51-12G FOR DET		001
-080E	D2549030410071		. . TOILET UNIT AND TOILET SHROUD NP used on 001K, 001S SEE 25-41-51-12G FOR DET		001
-080F	D2549030410671		. . TOILET UNIT AND TOILET SHROUD NP used on 001L SEE 25-41-51-12G FOR DET		001
-080G	D2549020403271		. . TOILET UNIT AND TOILET SHROUD NP used on 001M SEE 25-41-51-12G FOR DET		001

- ITEM NOT ILLUSTRATED

FIG. ITEM	PART NUMBER	AIRLINE STOCK NUMBER	NOMENCLATURE 1234567		EFF CODE	UNITS PER ASSY
-080H	R22540168900471		. . TOILET UNIT AND TOILET SHROUD POST VSB A2-254-25-106 used on 001R SEE 25-41-51-12G FOR DET	NP		001
090A	D2549030411472		. . PAN-FLOOR used on 001A, 001K, 001Q, 001S SEE 25-41-51-13P FOR DET	NP		001
-090B	D2549020402472		. . PAN-FLOOR used on 001B SEE 25-41-51-13Q FOR DET	NP		001
-090C	D2549030409672		. . PAN-FLOOR PRE VSB A2-254-25-106 used on 001C, 001E, 001H, 001N SEE 25-41-51-13N FOR DET	NP		001
-090D	D2549030410272		. . PAN-FLOOR used on 001D SEE 25-41-51-13N FOR DET	NP		001
-090E	D2549040500472		. . PAN-FLOOR used on 001F, 001P SEE 25-41-51-13P FOR DET	NP		001
-090F	D2549020409272		. . PAN-FLOOR used on 001G SEE 25-41-51-13Q FOR DET	NP		001
-090G	D2549030411672		. . PAN-FLOOR used on 001J SEE 25-41-51-13R FOR DET	NP		001
-090H	D2549030410872		. . PAN-FLOOR used on 001L SEE 25-41-51-13Q FOR DET	NP		001

- ITEM NOT ILLUSTRATED

FIG. ITEM	PART NUMBER	AIRLINE STOCK NUMBER	NOMENCLATURE 1234567		EFF CODE	UNITS PER ASSY
-090J	D2549020403272		. . PAN-FLOOR used on 001M SEE 25-41-51-13N FOR DET	NP		001
-090K	R22540168900472		. . PAN-FLOOR POST VSB A2-254-25-106 used on 001R SEE 25-41-51-13N FOR DET	NP		001
100A	D2549010512673		. . LIGHT-DOOR PRE VSB A2-254-25-106 used on 001A, 001B, 001C, 001E, 001F, 001G, 001H, 001J, 001K, 001M, 001N, 001P, 001Q, 001S SEE 25-41-51-140 FOR DET	NP		001
-100B	D2549030408273		. . LIGHT-DOOR used on 001D SEE 25-41-51-14A FOR DET	NP		001
-100C	D2549030414273		. . LIGHT-DOOR used on 001L SEE 25-41-51-14A FOR DET	NP		001
-100D	R22540166200073		. . LIGHT-DOOR POST VSB A2-254-25-106 used on 001R SEE 25-41-51-140 FOR DET	NP		001
110A	D2549030410074		. . WASHBASIN UNIT PRE VSB A2-254-25-106 used on 001A, 001E, 001F, 001H, 001J, 001L, 001N, 001P, 001Q SEE 25-41-51-15L FOR DET	NP		001
-110B	D2549020401674		. . WASHBASIN UNIT used on 001B, 001G SEE 25-41-51-15M FOR DET	NP		001

- ITEM NOT ILLUSTRATED

FIG. ITEM	PART NUMBER	AIRLINE STOCK NUMBER	NOMENCLATURE 1234567		EFF CODE	UNITS PER ASSY
-110C	D2549030411874		. . WASHBASIN UNIT used on 001C SEE 25-41-51-15L FOR DET	NP		001
-110D	D2549030408274		. . WASHBASIN UNIT used on 001D SEE 25-41-51-15D FOR DET	NP		001
-110E	D2549020404074		. . WASHBASIN UNIT used on 001K, 001M, 001S SEE 25-41-51-15L FOR DET	NP		001
-110F	R22540168900474		. . WASHBASIN UNIT POST VSB A2-254-25-106 used on 001R SEE 25-41-51-15L FOR DET	NP		001
120A	D2549030504675		. . DOOR ASSY-WASHBASIN UNIT used on 001A, 001Q SEE 25-41-51-16B FOR DET	NP		001
-120B	D2549020607075		. . DOOR ASSY-WASHBASIN UNIT used on 001B, 001C, 001E, 001J, 001N SEE 25-41-51-16B FOR DET	NP		001
-120C	D2549030506075		. . DOOR ASSY-WASHBASIN UNIT used on 001D SEE 25-41-51-16B FOR DET	NP		001
-120D	D2549030606075		. . DOOR ASSY-WASHBASIN UNIT PRE VSB A2-254-25-106 used on 001F, 001H, 001P SEE 25-41-51-16E FOR DET	NP		001

- ITEM NOT ILLUSTRATED

FIG. ITEM	PART NUMBER	AIRLINE STOCK NUMBER	NOMENCLATURE 1234567		EFF CODE	UNITS PER ASSY
-120E	D2549010603675		. . DOOR ASSY-WASHBASIN UNIT used on 001G SEE 25-41-51-16C FOR DET	NP		001
-120F	D2549020607675		. . DOOR ASSY-WASHBASIN UNIT used on 001K, 001S SEE 25-41-51-16C FOR DET	NP		001
-120G	D2549020510675		. . DOOR ASSY-WASHBASIN UNIT used on 001L SEE 25-41-51-16D FOR DET	NP		001
-120H	D2549020605475		. . DOOR ASSY-WASHBASIN UNIT used on 001M SEE 25-41-51-16C FOR DET	NP		001
-120J	R22540166200275		. . DOOR ASSY-WASHBASIN UNIT POST VSB A2-254-25-106 used on 001R SEE 25-41-51-16E FOR DET	NP		001
130A	D2549030504676		. . PANEL ASSY-WASHBASIN UNIT used on 001A, 001Q SEE 25-41-51-17C FOR DET	NP		001
-130B	D2549030504876		. . PANEL ASSY-WASHBASIN UNIT PRE VSB A2-254-25-106 used on 001B, 001C, 001E, 001F, 001H, 001J, 001N, 001P SEE 25-41-51-17C FOR DET	NP		001

- ITEM NOT ILLUSTRATED

FIG. ITEM	PART NUMBER	AIRLINE STOCK NUMBER	NOMENCLATURE 1234567		EFF CODE	UNITS PER ASSY
-130C	D2549030506076		. . PANEL ASSY-WASHBASIN UNIT used on 001D SEE 25-41-51-17C FOR DET	NP		001
-130D	D2549010603676		. . PANEL ASSY-WASHBASIN UNIT used on 001G SEE 25-41-51-17D FOR DET	NP		001
-130E	D2549020607676		. . PANEL ASSY-WASHBASIN UNIT used on 001K, 001S SEE 25-41-51-17C FOR DET	NP		001
-130F	D2549020710076		. . PANEL ASSY-WASHBASIN UNIT used on 001L SEE 25-41-51-17D FOR DET	NP		001
-130G	D2549020605476		. . PANEL ASSY-WASHBASIN UNIT used on 001M SEE 25-41-51-17D FOR DET	NP		001
-130H	R22540168900476		. . PANEL ASSY-WASHBASIN UNIT POST VSB A2-254-25-106 used on 001R SEE 25-41-51-17C FOR DET	NP		001
140A	D2549010611677		. . BIN-WASTE,CHUTE-WASTE AND EXTINGUISHER-FIRE used on 001A, 001B, 001C, 001D, 001E, 001F, 001G, 001H, 001J, 001K, 001L, 001M, 001N, 001P, 001Q, 001R, 001S SEE 25-41-51-180 FOR DET	NP		001

- ITEM NOT ILLUSTRATED

FIG. ITEM	PART NUMBER	AIRLINE STOCK NUMBER	NOMENCLATURE 1234567	EFF CODE	UNITS PER ASSY
150A	D2549030504078		. . CABINET-SERVICE NP PRE VSB A2-254-25-015 PRE VSB A2-254-25-106 used on 001A, 001E, 001H, 001Q SEE 25-41-51-19E FOR DET		001
-150B	D2549030504878		. . CABINET-SERVICE NP PRE VSB A2-254-25-045 used on 001B, 001F, 001G, 001J, 001K, 001S SEE 25-41-51-19E FOR DET		001
-150C	D2549030505278		. . CABINET-SERVICE NP used on 001C SEE 25-41-51-19E FOR DET		001
-150D	D2549030408278		. . CABINET-SERVICE NP used on 001D SEE 25-41-51-19F FOR DET		001
-150E	D2549020510678		. . CABINET-SERVICE NP used on 001L SEE 25-41-51-19F FOR DET		001
-150F	D2549020407478		. . CABINET-SERVICE NP used on 001M SEE 25-41-51-19J FOR DET		001
-150G	R22540168800078		. . CABINET-SERVICE NP POST VSB A2-254-25-015 used on 001N SEE 25-41-51-19E FOR DET		001
-150H	R22540119900278		. . CABINET-SERVICE NP POST VSB A2-254-25-045 used on 001P SEE 25-41-51-19E FOR DET		001

- ITEM NOT ILLUSTRATED

FIG. ITEM	PART NUMBER	AIRLINE STOCK NUMBER	NOMENCLATURE 1234567		EFF CODE	UNITS PER ASSY
-150J	R22540166200078		. . CABINET-SERVICE POST VSB A2-254-25-106 used on 001R SEE 25-41-51-19E FOR DET	NP		001
160A	D2549010512679		. . TABLE-NURSING used on 001A, 001J, 001Q SEE 25-41-51-20A FOR DET	NP		001
-160B	D2549010510679		. . TABLE-NURSING PRE VSB A2-254-25-106 used on 001B, 001C, 001E, 001F, 001G, 001H, 001K, 001M, 001N, 001P, 001S SEE 25-41-51-20A FOR DET	NP		001
-160C	D2549030408279		. . TABLE-NURSING used on 001D SEE 25-41-51-20B FOR DET	NP		001
-160D	D2549020510679		. . TABLE-NURSING used on 001L SEE 25-41-51-20B FOR DET	NP		001
-160E	R22540166200079		. . TABLE-NURSING POST VSB A2-254-25-106 used on 001R SEE 25-41-51-20A FOR DET	NP		001
170A	D2549020802680		. . VENTILATION SYSTEM PRE VSB A2-254-25-106 used on 001A, 001B, 001C, 001E, 001F, 001G, 001H, 001J, 001K, 001M, 001N, 001P, 001Q, 001S SEE 25-41-51-21B FOR DET	NP		001
-170B	D2549030408280		. . VENTILATION SYSTEM used on 001D SEE 25-41-51-21B FOR DET	NP		001

- ITEM NOT ILLUSTRATED

FIG. ITEM	PART NUMBER	AIRLINE STOCK NUMBER	NOMENCLATURE 1234567		EFF CODE	UNITS PER ASSY
-170C	D2549020510680		. . VENTILATION SYSTEM used on 001L SEE 25-41-51-21B FOR DET	NP		001
-170D	R22540166200080		. . VENTILATION SYSTEM POST VSB A2-254-25-106 used on 001R SEE 25-41-51-21B FOR DET	NP		001
180A	D2549020401281		. . WATER SYSTEM-POTABLE PRE VSB A2-254-25-015 used on 001A, 001C, 001D, 001E, 001F, 001G, 001H, 001K, 001L, 001M, 001P, 001Q, 001R, 001S SEE 25-41-51-22D FOR DET	NP		001
-180B	D2549030410081		. . WATER SYSTEM-POTABLE used on 001B, 001J SEE 25-41-51-22G FOR DET	NP		001
-180C	R22540161100081		. . WATER SYSTEM-POTABLE POST VSB A2-254-25-015 used on 001N SEE 25-41-51-22D FOR DET	NP		001
190A	D2549020800882		. . WATER SYSTEM-WASTE PRE VSB A2-254-25-015 used on 001A, 001E, 001F, 001G, 001H, 001L, 001P, 001Q, 001R SEE 25-41-51-23D FOR DET	NP		001
-190B	D2549030405082		. . WATER SYSTEM-WASTE used on 001B, 001J SEE 25-41-51-23B FOR DET	NP		001
-190C	D2549030504882		. . WATER SYSTEM-WASTE used on 001C, 001D SEE 25-41-51-23B FOR DET	NP		001

- ITEM NOT ILLUSTRATED

FIG. ITEM	PART NUMBER	AIRLINE STOCK NUMBER	NOMENCLATURE 1234567		EFF CODE	UNITS PER ASSY
-190D	D2549030614682		. . WATER SYSTEM-WASTE used on 001K, 001M, 001S SEE 25-41-51-23D FOR DET	NP		001
-190E	R22540161100082		. . WATER SYSTEM-WASTE POST VSB A2-254-25-015 used on 001N SEE 25-41-51-23D FOR DET	NP		001
200A	D2549030410283		. . ELECTRICAL SYSTEM used on 001A, 001B, 001C, 001E, 001F, 001G, 001J, 001K, 001N, 001P, 001Q, 001S SEE 25-41-51-26R FOR DET	NP		001
-200B	D2549030412283		. . ELECTRICAL SYSTEM used on 001D SEE 25-41-51-26R FOR DET	NP		001
-200C	D2549020400883		. . ELECTRICAL SYSTEM used on 001H, 001R SEE 25-41-51-26R FOR DET	NP		001
-200D	D2549030414283		. . ELECTRICAL SYSTEM used on 001L SEE 25-41-51-26U FOR DET	NP		001
-200E	D2549010403483		. . ELECTRICAL SYSTEM used on 001M SEE 25-41-51-26R FOR DET	NP		001
210A	D9250000000285		. . ELECTRICAL SYSTEM- COCKPIT DOOR LOCKING used on 001A, 001B, 001C, 001D, 001E, 001F, 001G, 001H, 001J, 001K, 001L, 001M, 001N, 001P, 001Q, 001R, 001S SEE 25-41-51-31B FOR DET	NP		001

- ITEM NOT ILLUSTRATED

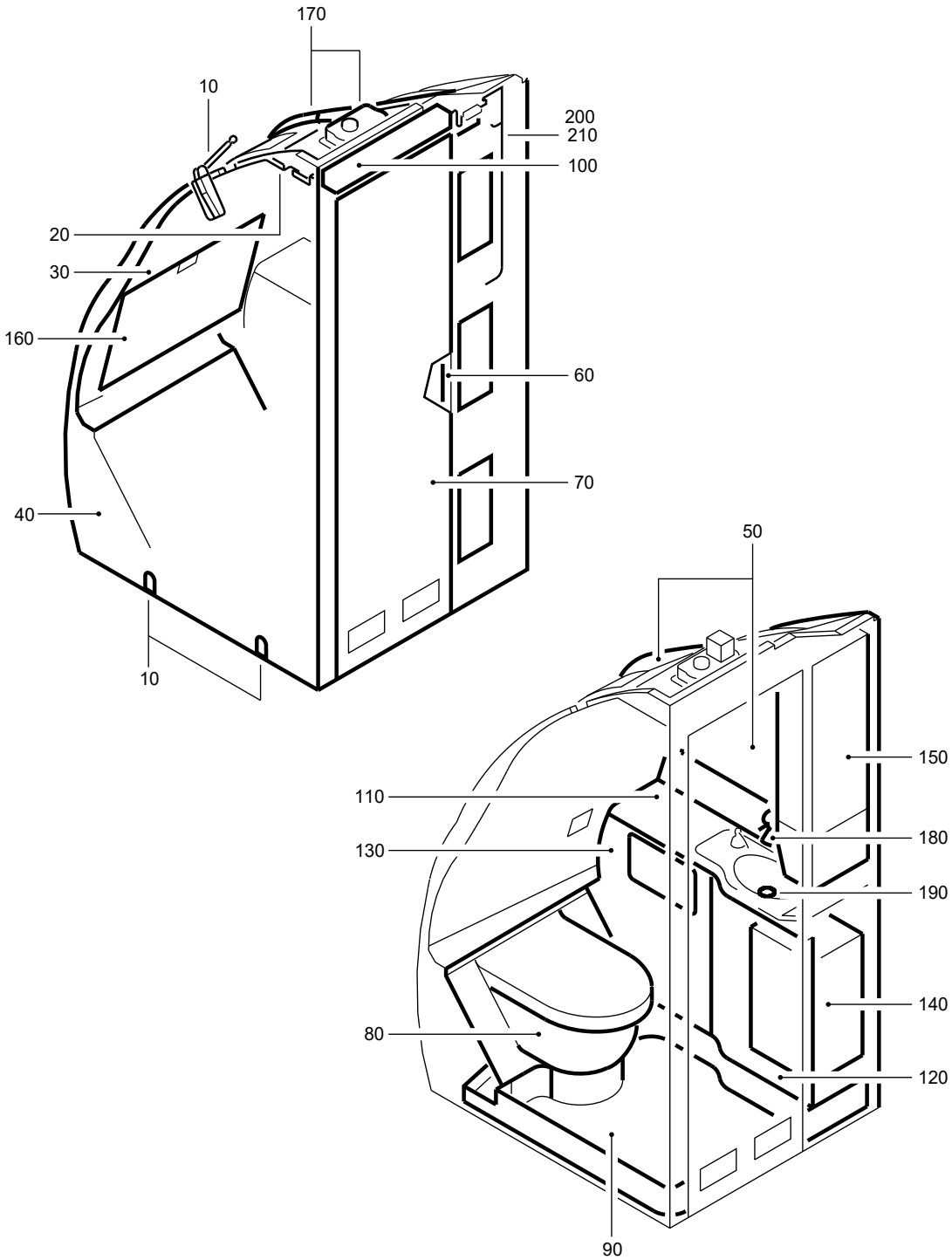

F_PL_254151_42_M_01_00

LAVATORY A ASSY
Figure 42M/EN254151SHEET42M01

FIG. ITEM	PART NUMBER	AIRLINE STOCK NUMBER	NOMENCLATURE 1234567	EFF CODE	UNITS PER ASSY
42M					
-001A	D2549020409400		. LAVATORY A ASSY SEE SIL 25-117 FOR DET		RF
-001B	D2549020403600		. LAVATORY A ASSY PRE VSB A2-254-25-073 PRE VSB A2-254-25-131 SEE SIL 25-117 FOR DET		RF
-001C	D2549010404200		. LAVATORY A ASSY SEE SIL 25-117 FOR DET		RF
-001D	D2549040501600		. LAVATORY A ASSY SEE SIL 25-117 FOR DET		RF
-001E	D2549020408000		. LAVATORY A ASSY SEE SIL 25-117 FOR DET		RF
-001F	D2549010403800		. LAVATORY A ASSY SEE SIL 25-117 FOR DET		RF
-001G	D2549030413000		. LAVATORY A ASSY PRE VSB A2-254-25-080 SEE SIL 25-117 FOR DET		RF
-001H	D2549040501200		. LAVATORY A ASSY SEE SIL 25-117 FOR DET		RF
-001J	D2549030413200		. LAVATORY A ASSY PRE VSB A2-254-25-015 PRE VSB A2-254-25-045 SEE SIL 25-117 FOR DET		RF
-001K	D2549020401000		. LAVATORY A ASSY SEE SIL 25-117 FOR DET		RF
-001L	D2549030700400		. LAVATORY A ASSY PRE VSB A2-254-25-045 SEE SIL 25-117 FOR DET		RF

- ITEM NOT ILLUSTRATED

FIG. ITEM	PART NUMBER	AIRLINE STOCK NUMBER	NOMENCLATURE 1234567	EFF CODE	UNITS PER ASSY
-001M	D2549020410200		. LAVATORY A ASSY VSB A2-254-25-032 SEE SIL 25-117 FOR DET		RF
-001N	R225401611-000		. LAVATORY A ASSY POST VSB A2-254-25-015 SEE SIL 25-117 FOR DET		RF
-001P	R225401691-000		. LAVATORY A ASSY POST VSB A2-254-25-080 SEE SIL 25-117 FOR DET		RF
-001Q	R225401611-016		. LAVATORY A ASSY POST VSB A2-254-25-045 SEE SIL 25-117 FOR DET		RF
-001R	R225401611-018		. LAVATORY A ASSY POST VSB A2-254-25-045 SEE SIL 25-117 FOR DET		RF
-001S	R225401643-006		. LAVATORY A ASSY POST VSB A2-254-25-073		RF
-001T	R225401643-008		. LAVATORY A ASSY POST VSB A2-254-25-131		RF
010A	D2549010613861		. . ATTACHMENT-LAVATORY NP used on 001A, 001B, 001E, 001F, 001K, 001M, 001S, 001T SEE 25-41-51-02C FOR DET		001
-010B	D2549020400861		. . ATTACHMENT-LAVATORY NP used on 001C, 001J, 001L, 001N, 001Q, 001R SEE 25-41-51-02B FOR DET		001
-010C	D2549040500861		. . ATTACHMENT-LAVATORY NP used on 001D, 001G, 001H, 001P SEE 25-41-51-02B FOR DET		001

- ITEM NOT ILLUSTRATED

FIG. ITEM	PART NUMBER	AIRLINE STOCK NUMBER	NOMENCLATURE 1234567	EFF CODE	UNITS PER ASSY
020A	D2549030401463		. . PANEL-CEILING NP used on 001A, 001B, 001C, 001E, 001F, 001J, 001K, 001L, 001M, 001N, 001Q, 001R, 001S, 001T SEE 25-41-51-040 FOR DET		001
-020B	D2549040500663		. . PANEL-CEILING NP used on 001D, 001G, 001H, 001P SEE 25-41-51-04A FOR DET		001
030A	D2549020807864		. . WALL-REAR NP used on 001A, 001B, 001S, 001T SEE 25-41-51-05H FOR DET		001
-030B	D2549020805464		. . WALL-REAR NP used on 001C, 001D, 001E, 001F, 001H, 001J, 001K, 001L, 001M, 001N, 001Q, 001R SEE 25-41-51-05H FOR DET		001
-030C	D2549020812264		. . WALL-REAR NP used on 001G, 001P SEE 25-41-51-05H FOR DET		001
040A	D2549020409465		. . WALL-SIDE NP used on 001A SEE 25-41-51-48K FOR DET		001
-040B	D2549020403665		. . WALL-SIDE NP used on 001B, 001S, 001T SEE 25-41-51-48K FOR DET		001
-040C	D2549020408665		. . WALL-SIDE NP used on 001C SEE 25-41-51-48H FOR DET		001
-040D	D2549040500465		. . WALL-SIDE NP used on 001D, 001H SEE 25-41-51-48A FOR DET		001

- ITEM NOT ILLUSTRATED

FIG. ITEM	PART NUMBER	AIRLINE STOCK NUMBER	NOMENCLATURE 1234567		EFF CODE	UNITS PER ASSY
-040E	D2549020408065		. . WALL-SIDE used on 001E SEE 25-41-51-48K FOR DET	NP		001
-040F	D2549010403865		. . WALL-SIDE used on 001F SEE 25-41-51-48K FOR DET	NP		001
-040G	D2549030413065		. . WALL-SIDE PRE VSB A2-254-25-080 used on 001G SEE 25-41-51-48K FOR DET	NP		001
-040H	D2549030412665		. . WALL-SIDE PRE VSB A2-254-25-045 used on 001J, 001L, 001N SEE 25-41-51-48H FOR DET	NP		001
-040J	D2549010401065		. . WALL-SIDE used on 001K SEE 25-41-51-48G FOR DET	NP		001
-040K	D2549020410265		. . WALL-SIDE PRE VSB A2-254-25-032 used on 001M SEE 25-41-51-48J FOR DET	NP		001
-040L	D2549020410265		. . WALL-SIDE POST VSB A2-254-25-032 used on 001M SEE 25-41-51-48J FOR DET	NP		001
-040M	R22540169100065		. . WALL-SIDE POST VSB A2-254-25-080 used on 001P SEE 25-41-51-48K FOR DET	NP		001
-040N	R22540161101465		. . WALL-SIDE POST VSB A2-254-25-045 used on 001Q, 001R SEE 25-41-51-48H FOR DET	NP		001

- ITEM NOT ILLUSTRATED

FIG. ITEM	PART NUMBER	AIRLINE STOCK NUMBER	NOMENCLATURE 1234567	EFF CODE	UNITS PER ASSY
050A	D2549020409466		. . HOUSING NP used on 001A SEE 25-41-51-490 FOR DET		001
-050B	D2549020406066		. . HOUSING NP used on 001B, 001S, 001T SEE 25-41-51-07X FOR DET		001
-050C	D2549020404066		. . HOUSING NP used on 001C SEE 25-41-51-07W FOR DET		001
-050D	D2549040500466		. . HOUSING NP used on 001D, 001H SEE 25-41-51-07X FOR DET		001
-050E	D2549010403866		. . HOUSING NP used on 001F SEE 25-41-51-490 FOR DET		001
-050F	D2549040500866		. . HOUSING NP used on 001G, 001P SEE 25-41-51-07X FOR DET		001
-050G	D2549020401266		. . HOUSING NP used on 001J, 001L, 001N, 001Q, 001R SEE 25-41-51-07W FOR DET		001
-050H	D2549010401066		. . HOUSING NP used on 001K SEE 25-41-51-07X FOR DET		001
-050J	D2549020408066		. . HOUSING NP used on 001E SEE 25-41-51-49C FOR DET		001
-050K	D2549020410266		. . HOUSING NP used on 001M SEE 25-41-51-49C FOR DET		001

- ITEM NOT ILLUSTRATED

FIG. ITEM	PART NUMBER	AIRLINE STOCK NUMBER	NOMENCLATURE 1234567	EFF CODE	UNITS PER ASSY
060A	D2549020401269		. . DOOR INSTL NP used on 001A, 001B, 001C, 001D, 001E, 001F, 001G, 001H, 001J, 001K, 001L, 001M, 001N, 001P, 001Q, 001R, 001S, 001T SEE 25-41-51-10A FOR DET		001
070A	A225400276-948		. . DOOR ASSY-SINGLE used on 001A, 001E SEE 25-41-51-11G FOR DET		001
-070B	A225400276-942		. . DOOR ASSY-SINGLE used on 001B, 001S, 001T SEE 25-41-51-11F FOR DET		001
-070C	A225400278-514		. . DOOR ASSY-SINGLE used on 001C SEE 25-41-51-11H FOR DET		001
-070D	A225400276-960		. . DOOR ASSY-SINGLE used on 001D, 001H, 001J, 001L, 001N, 001Q, 001R SEE 25-41-51-11J FOR DET		001
-070E	A225400276-934		. . DOOR ASSY-SINGLE used on 001F, 001G, 001P SEE 25-41-51-11F FOR DET		001
-070F	A225400278-900		. . DOOR ASSY-SINGLE used on 001K SEE 25-41-51-11K FOR DET		001
-070G	A225400276-578		. . DOOR ASSY-SINGLE used on 001M SEE 25-41-51-11F FOR DET		001
080A	D2549020403271		. . TOILET UNIT AND TOILET SHROUD NP used on 001A, 001E SEE 25-41-51-12G FOR DET		001

- ITEM NOT ILLUSTRATED

FIG. ITEM	PART NUMBER	AIRLINE STOCK NUMBER	NOMENCLATURE 1234567		EFF CODE	UNITS PER ASSY
-080B	D2549030410071		. . TOILET UNIT AND TOILET SHROUD used on 001B, 001S, 001T SEE 25-41-51-12G FOR DET	NP		001
-080C	D2549020811871		. . TOILET UNIT AND TOILET SHROUD used on 001C, 001D, 001G, 001H, 001J, 001L, 001M, 001N, 001P, 001Q, 001R SEE 25-41-51-12G FOR DET	NP		001
-080D	D2549020400871		. . TOILET UNIT AND TOILET SHROUD used on 001F SEE 25-41-51-12G FOR DET	NP		001
-080E	D2549010401071		. . TOILET UNIT AND TOILET SHROUD used on 001K SEE 25-41-51-12G FOR DET	NP		001
090A	D2549030409672		. . PAN-FLOOR used on 001A, 001C, 001E SEE 25-41-51-13N FOR DET	NP		001
-090B	D2549030409472		. . PAN-FLOOR PRE VSB A2-254-25-131 used on 001B, 001S SEE 25-41-51-13P FOR DET	NP		001
-090C	D2549040501672		. . PAN-FLOOR used on 001D SEE 25-41-51-13Q FOR DET	NP		001
-090D	D2549010403872		. . PAN-FLOOR used on 001F SEE 25-41-51-13Q FOR DET	NP		001

- ITEM NOT ILLUSTRATED

FIG. ITEM	PART NUMBER	AIRLINE STOCK NUMBER	NOMENCLATURE 1234567	EFF CODE	UNITS PER ASSY
-090E	D2549030413072		. . PAN-FLOOR NP used on 001G, 001P SEE 25-41-51-13Q FOR DET		001
-090F	D2549040501272		. . PAN-FLOOR NP used on 001H SEE 25-41-51-13S FOR DET		001
-090G	D2549040500472		. . PAN-FLOOR NP used on 001J, 001N, 001Q SEE 25-41-51-13P FOR DET		001
-090H	D2549010401072		. . PAN-FLOOR NP used on 001K SEE 25-41-51-13P FOR DET		001
-090J	D2549030700472		. . PAN-FLOOR NP used on 001L, 001R SEE 25-41-51-13S FOR DET		001
-090K	D2549020410272		. . PAN-FLOOR NP used on 001M SEE 25-41-51-13S FOR DET		001
-090L	R22540164300872		. . PAN-FLOOR NP POST VSB A2-254-25-131 used on 001T SEE 25-41-51-13P FOR DET		001
100A	D2549010512673		. . LIGHT-DOOR NP used on 001A, 001B, 001C, 001E, 001F, 001J, 001K, 001L, 001M, 001N, 001Q, 001R, 001S, 001T SEE 25-41-51-140 FOR DET		001
-100B	D2549040501673		. . LIGHT-DOOR NP used on 001D, 001G, 001H, 001P SEE 25-41-51-14A FOR DET		001

- ITEM NOT ILLUSTRATED

FIG. ITEM	PART NUMBER	AIRLINE STOCK NUMBER	NOMENCLATURE 1234567	EFF CODE	UNITS PER ASSY
110A	D2549020409474		. . WASHBASIN UNIT NP used on 001A SEE 25-41-51-15P FOR DET		001
-110B	D2549030410074		. . WASHBASIN UNIT NP used on 001B, 001C, 001E, 001F, 001S, 001T SEE 25-41-51-15L FOR DET		001
-110C	D2549020402674		. . WASHBASIN UNIT NP used on 001D, 001H, 001J, 001L, 001N, 001Q, 001R SEE 25-41-51-15L FOR DET		001
-110D	D2549040500674		. . WASHBASIN UNIT NP used on 001G, 001P SEE 25-41-51-15L FOR DET		001
-110E	D2549020404074		. . WASHBASIN UNIT NP used on 001M SEE 25-41-51-15L FOR DET		001
-110F	D2549020706674		. . WASHBASIN UNIT NP used on 001K SEE 25-41-51-15D FOR DET		001
120A	D2549020605475		. . DOOR ASSY-WASHBASIN UNIT NP used on 001A, 001E SEE 25-41-51-16C FOR DET		001
-120B	D2549020607675		. . DOOR ASSY-WASHBASIN UNIT NP used on 001B, 001S, 001T SEE 25-41-51-16C FOR DET		001
-120C	D2549020607075		. . DOOR ASSY-WASHBASIN UNIT NP used on 001C SEE 25-41-51-16B FOR DET		001

- ITEM NOT ILLUSTRATED

FIG. ITEM	PART NUMBER	AIRLINE STOCK NUMBER	NOMENCLATURE 1234567	EFF CODE	UNITS PER ASSY
-120D	D2549030606075		. . DOOR ASSY-WASHBASIN UNIT NP used on 001D, 001G, 001H, 001J, 001L, 001M, 001N, 001P, 001Q, 001R SEE 25-41-51-16E FOR DET		001
-120E	D2549010609875		. . DOOR ASSY-WASHBASIN UNIT NP used on 001F SEE 25-41-51-16C FOR DET		001
-120F	D2549010603675		. . DOOR ASSY-WASHBASIN UNIT NP used on 001K SEE 25-41-51-16C FOR DET		001
130A	D2549020409476		. . PANEL ASSY-WASHBASIN UNIT NP used on 001A SEE 25-41-51-17D FOR DET		001
-130B	D2549020607676		. . PANEL ASSY-WASHBASIN UNIT NP used on 001B, 001S, 001T SEE 25-41-51-17C FOR DET		001
-130C	D2549030504876		. . PANEL ASSY-WASHBASIN UNIT NP used on 001C, 001D, 001G, 001H, 001J, 001L, 001M, 001N, 001P, 001Q, 001R SEE 25-41-51-17C FOR DET		001
-130D	D2549020605476		. . PANEL ASSY-WASHBASIN UNIT NP used on 001E SEE 25-41-51-17D FOR DET		001

- ITEM NOT ILLUSTRATED

FIG. ITEM	PART NUMBER	AIRLINE STOCK NUMBER	NOMENCLATURE 1234567		EFF CODE	UNITS PER ASSY
-130E	D2549010609876		. . PANEL ASSY-WASHBASIN UNIT used on 001F SEE 25-41-51-17D FOR DET	NP		001
-130F	D2549010603676		. . PANEL ASSY-WASHBASIN UNIT used on 001K SEE 25-41-51-17D FOR DET	NP		001
140A	D2549010611677		. . BIN-WASTE,CHUTE-WASTE AND EXTINGUISHER-FIRE used on 001A, 001B, 001C, 001D, 001E, 001F, 001G, 001H, 001J, 001K, 001L, 001M, 001N, 001P, 001Q, 001R, 001S, 001T SEE 25-41-51-180 FOR DET	NP		001
150A	D2549030504078		. . CABINET-SERVICE used on 001A, 001B, 001C, 001S, 001T SEE 25-41-51-19E FOR DET	NP		001
-150B	D2549030504878		. . CABINET-SERVICE PRE VSB A2-254-25-015 PRE VSB A2-254-25-032 PRE VSB A2-254-25-045 PRE VSB A2-254-25-080 used on 001D, 001E, 001F, 001G, 001H, 001J, 001K, 001L, 001M SEE 25-41-51-19E FOR DET	NP		001
-150C	R22540163900078		. . CABINET-SERVICE POST VSB A2-254-25-015 used on 001N SEE 25-41-51-19E FOR DET	NP		001
-150D	D2549030504878		. . CABINET-SERVICE POST VSB A2-254-25-032 used on 001M SEE 25-41-51-19E FOR DET	NP		001

- ITEM NOT ILLUSTRATED

FIG. ITEM	PART NUMBER	AIRLINE STOCK NUMBER	NOMENCLATURE 1234567		EFF CODE	UNITS PER ASSY
-150E	R22540114500278		. . CABINET-SERVICE POST VSB A2-254-25-080 used on 001P SEE 25-41-51-19E FOR DET	NP		001
-150F	R22540119900278		. . CABINET-SERVICE POST VSB A2-254-25-045 used on 001Q, 001R SEE 25-41-51-19E FOR DET	NP		001
160A	D2549010512679		. . TABLE-NURSING used on 001A, 001B, 001S, 001T SEE 25-41-51-20A FOR DET	NP		001
-160B	D2549010510679		. . TABLE-NURSING used on 001C, 001D, 001E, 001F, 001G, 001H, 001J, 001K, 001L, 001M, 001N, 001P, 001Q, 001R SEE 25-41-51-20A FOR DET	NP		001
170A	D2549020802680		. . VENTILATION SYSTEM used on 001A, 001B, 001C, 001D, 001E, 001F, 001G, 001H, 001J, 001K, 001L, 001M, 001N, 001P, 001Q, 001R, 001S, 001T SEE 25-41-51-21B FOR DET	NP		001
180A	D2549020401281		. . WATER SYSTEM-POTABLE PRE VSB A2-254-25-015 used on 001A, 001B, 001C, 001D, 001E, 001F, 001G, 001H, 001J, 001K, 001L, 001M, 001P, 001Q, 001R, 001S, 001T SEE 25-41-51-22D FOR DET	NP		001
-180B	R22540161100081		. . WATER SYSTEM-POTABLE POST VSB A2-254-25-015 used on 001N SEE 25-41-51-22D FOR DET	NP		001

- ITEM NOT ILLUSTRATED

FIG. ITEM	PART NUMBER	AIRLINE STOCK NUMBER	NOMENCLATURE 1234567		EFF CODE	UNITS PER ASSY
190A	D2549020800882		. . WATER SYSTEM-WASTE PRE VSB A2-254-25-015 used on 001A, 001B, 001C, 001D, 001E, 001F, 001G, 001H, 001J, 001P, 001Q, 001S, 001T SEE 25-41-51-23D FOR DET	NP		001
-190B	D2549010511082		. . WATER SYSTEM-WASTE used on 001K, 001L, 001R SEE 25-41-51-23B FOR DET	NP		001
-190C	D2549030504882		. . WATER SYSTEM-WASTE used on 001M SEE 25-41-51-23B FOR DET	NP		001
-190D	R22540161100082		. . WATER SYSTEM-WASTE POST VSB A2-254-25-015 used on 001N SEE 25-41-51-23D FOR DET	NP		001
200A	D2549030410283		. . ELECTRICAL SYSTEM used on 001A, 001B, 001C, 001E, 001J, 001L, 001N, 001Q, 001R, 001S, 001T SEE 25-41-51-26R FOR DET	NP		001
-200B	D2549030414283		. . ELECTRICAL SYSTEM used on 001D, 001H SEE 25-41-51-26U FOR DET	NP		001
-200C	D2549020400883		. . ELECTRICAL SYSTEM used on 001F, 001M SEE 25-41-51-26R FOR DET	NP		001
-200D	D2549030413083		. . ELECTRICAL SYSTEM used on 001G, 001P SEE 25-41-51-26U FOR DET	NP		001
-200E	D2549020409883		. . ELECTRICAL SYSTEM used on 001K SEE 25-41-51-26R FOR DET	NP		001

- ITEM NOT ILLUSTRATED

FIG. ITEM	PART NUMBER	AIRLINE STOCK NUMBER	NOMENCLATURE 1234567		EFF CODE	UNITS PER ASSY
210A	D9250000000285		. . ELECTRICAL SYSTEM-COCKPIT DOOR LOCKING used on 001A, 001B, 001C, 001D, 001E, 001F, 001G, 001H, 001J, 001K, 001L, 001M, 001N, 001P, 001Q, 001R, 001S, 001T SEE 25-41-51-31B FOR DET	NP		001

- ITEM NOT ILLUSTRATED

THIS PAGE IS INTENTIONALLY LEFT BLANK

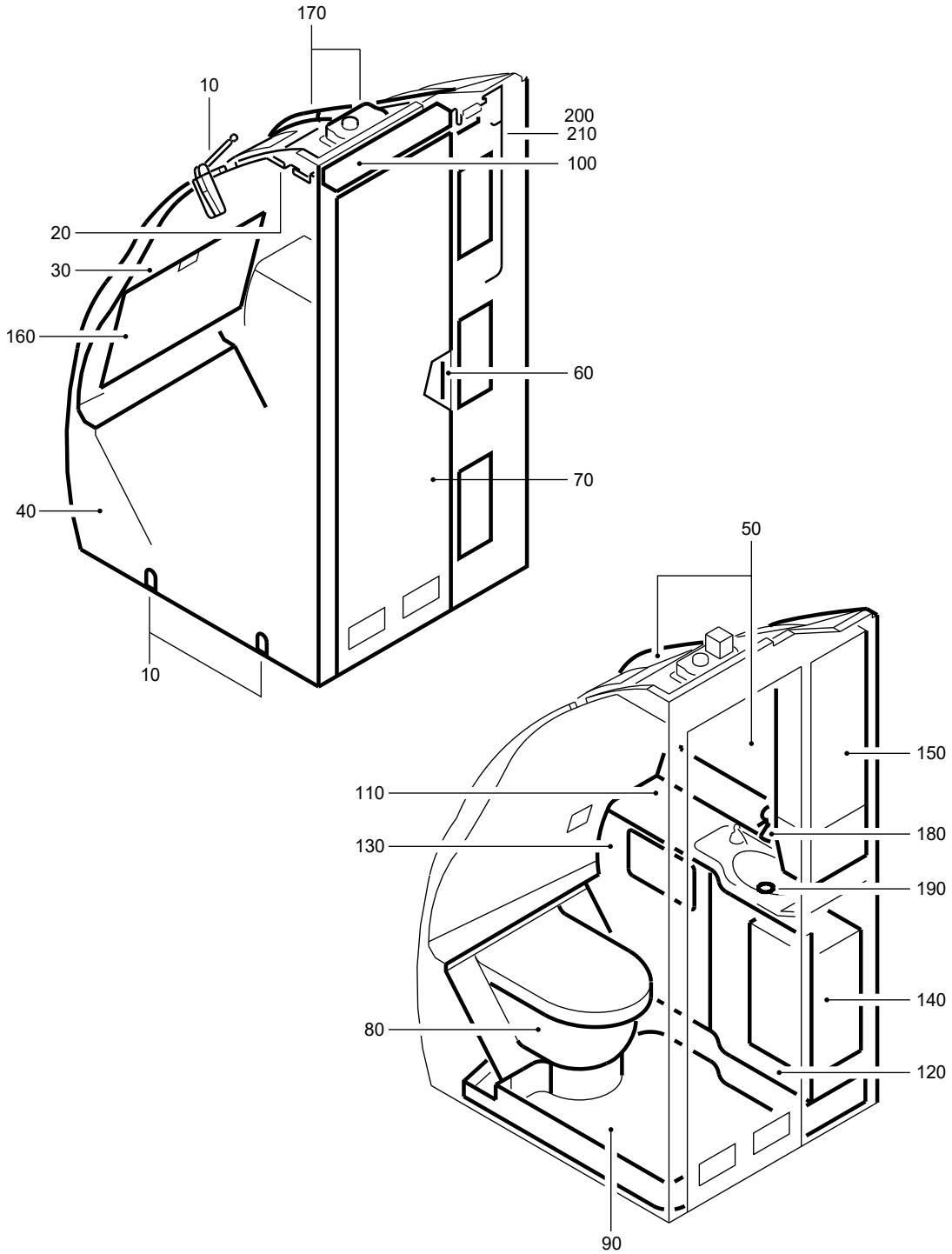

F_PL_254151_42_N_01_00

LAVATORY A ASSY
Figure 42N/EN254151SHEET42N01

FIG. ITEM	PART NUMBER	AIRLINE STOCK NUMBER	NOMENCLATURE 1234567	EFF CODE	UNITS PER ASSY
42N					
-001A	D2549020409800		. LAVATORY A ASSY SEE SIL 25-117 FOR DET		RF
-001B	D2549010404600		. LAVATORY A ASSY PRE VSB A2-254-25-047 SEE SIL 25-117 FOR DET		RF
-001C	D2549020410400		. LAVATORY A ASSY SEE SIL 25-117 FOR DET		RF
-001D	D2549030414000		. LAVATORY A ASSY PRE VSB A2-254-25-052 SEE SIL 25-117 FOR DET		RF
-001E	D2549010402400		. LAVATORY A ASSY SEE SIL 25-117 FOR DET		RF
-001F	D2549030413400		. LAVATORY A ASSY SEE SIL 25-117 FOR DET		RF
-001G	D2549030414600		. LAVATORY A ASSY SEE SIL 25-117 FOR DET		RF
-001H	D2549030414400		. LAVATORY A ASSY SEE SIL 25-117 FOR DET		RF
-001J	D2549030414800		. LAVATORY A ASSY SEE SIL 25-117 FOR DET		RF
-001K	D2549020410600		. LAVATORY A ASSY SEE SIL 25-117 FOR DET		RF
-001L	D2549030700000		. LAVATORY A ASSY PRE VSB A2-254-25-022 SEE SIL 25-117 FOR DET		RF
-001M	D2549030701200		. LAVATORY A ASSY SEE SIL 25-117 FOR DET		RF
-001N	D2549030701200		. LAVATORY A ASSY		RF

- ITEM NOT ILLUSTRATED

FIG. ITEM	PART NUMBER	AIRLINE STOCK NUMBER	NOMENCLATURE 1234567		EFF CODE	UNITS PER ASSY
-001P	R225401697-000		. LAVATORY A ASSY POST VSB A2-254-25-022			RF
-001Q	R225401671-000		. LAVATORY A ASSY POST VSB A2-254-25-052 SEE SIL 25-117 FOR DET			RF
-001R	R225401685-002		. LAVATORY A ASSY POST VSB A2-254-25-047			RF
010A	D2549020400861		. . ATTACHMENT-LAVATORY used on 001A, 001E SEE 25-41-51-02B FOR DET	NP		001
-010B	D2549010613861		. . ATTACHMENT-LAVATORY used on 001B, 001H, 001J, 001R SEE 25-41-51-02C FOR DET	NP		001
-010C	D2549040500861		. . ATTACHMENT-LAVATORY used on 001C, 001K, 001L, 001M, 001P SEE 25-41-51-02B FOR DET	NP		001
-010D	D2549030414061		. . ATTACHMENT-LAVATORY used on 001D, 001Q SEE 25-41-51-02B FOR DET	NP		001
-010E	D2549030413461		. . ATTACHMENT-LAVATORY used on 001F SEE 25-41-51-02D FOR DET	NP		001
-010F	D2549030414661		. . ATTACHMENT-LAVATORY used on 001G SEE 25-41-51-02D FOR DET	NP		001
-010G	D2547161202861		. . ATTACHMENT-LAVATORY used on 001N	NP		001

- ITEM NOT ILLUSTRATED

FIG. ITEM	PART NUMBER	AIRLINE STOCK NUMBER	NOMENCLATURE 1234567	EFF CODE	UNITS PER ASSY
020A	D2549030401463		. . PANEL-CEILING NP used on 001A, 001B, 001C, 001E, 001H, 001J, 001K, 001M, 001R SEE 25-41-51-040 FOR DET		001
-020B	D2549030409663		. . PANEL-CEILING NP used on 001D, 001G, 001N, 001Q SEE 25-41-51-04A FOR DET		001
-020C	D2549030408263		. . PANEL-CEILING NP used on 001F SEE 25-41-51-04A FOR DET		001
-020D	D2549040500663		. . PANEL-CEILING NP used on 001L, 001P SEE 25-41-51-04A FOR DET		001
030A	D2549020805464		. . WALL-REAR NP used on 001A, 001H, 001J, 001L, 001P SEE 25-41-51-05H FOR DET		001
-030B	D2549030406464		. . WALL-REAR NP used on 001B, 001M, 001R SEE 25-41-51-05F FOR DET		001
-030C	D2549010400864		. . WALL-REAR NP used on 001C SEE 25-41-51-05J FOR DET		001
-030D	D2549010613264		. . WALL-REAR NP used on 001D, 001Q SEE 25-41-51-05H FOR DET		001
-030E	D2549010402464		. . WALL-REAR NP used on 001E SEE 25-41-51-05F FOR DET		001
-030F	D2549030413464		. . WALL-REAR NP used on 001F SEE 25-41-51-05H FOR DET		001

- ITEM NOT ILLUSTRATED

FIG. ITEM	PART NUMBER	AIRLINE STOCK NUMBER	NOMENCLATURE 1234567		EFF CODE	UNITS PER ASSY
-030G	D2549030414664		. . WALL-REAR used on 001G SEE 25-41-51-05F FOR DET	NP		001
-030H	D2549020807864		. . WALL-REAR used on 001K SEE 25-41-51-05H FOR DET	NP		001
-030J	D2547161202864		. . WALL-REAR used on 001N SEE 25-41-51-05F FOR DET	NP		001
040A	D2549020409865		. . WALL-SIDE used on 001A SEE 25-41-51-48K FOR DET	NP		001
-040B	D2549010610665		. . WALL-SIDE used on 001B, 001R SEE 25-41-51-48G FOR DET	NP		001
-040C	D2549020410465		. . WALL-SIDE used on 001C SEE 25-41-51-48L FOR DET	NP		001
-040D	D2549030409665		. . WALL-SIDE PRE VSB A2-254-25-052 used on 001D SEE 25-41-51-48G FOR DET	NP		001
-040E	D2549010402465		. . WALL-SIDE used on 001E SEE 25-41-51-48L FOR DET	NP		001
-040F	D2549030413465		. . WALL-SIDE used on 001F SEE 25-41-51-48L FOR DET	NP		001
-040G	D2549030414665		. . WALL-SIDE used on 001G SEE 25-41-51-48L FOR DET	NP		001

- ITEM NOT ILLUSTRATED

FIG. ITEM	PART NUMBER	AIRLINE STOCK NUMBER	NOMENCLATURE 1234567		EFF CODE	UNITS PER ASSY
-040H	D2549030414465		. . WALL-SIDE used on 001H SEE 25-41-51-48L FOR DET	NP		001
-040J	D2549030414865		. . WALL-SIDE used on 001J SEE 25-41-51-48J FOR DET	NP		001
-040K	D2549010613665		. . WALL-SIDE used on 001K SEE 25-41-51-48K FOR DET	NP		001
-040L	D2549030700065		. . WALL-SIDE PRE VSB A2-254-25-022 used on 001L SEE 25-41-51-48J FOR DET	NP		001
-040M	D2549030701265		. . WALL-SIDE used on 001M SEE 25-41-51-48L FOR DET	NP		001
-040N	D2547161203465		. . WALL-SIDE used on 001N SEE 25-41-51-48N FOR DET	NP		001
-040P	R22540169700065		. . WALL-SIDE POST VSB A2-254-25-022 used on 001P SEE 25-41-51-48J FOR DET	NP		001
-040Q	R22540167100065		. . WALL-SIDE POST VSB A2-254-25-052 used on 001Q SEE 25-41-51-48G FOR DET	NP		001
050A	D2549020400666		. . HOUSING used on 001A SEE 25-41-51-07W FOR DET	NP		001

- ITEM NOT ILLUSTRATED

FIG. ITEM	PART NUMBER	AIRLINE STOCK NUMBER	NOMENCLATURE 1234567	EFF CODE	UNITS PER ASSY
-050B	D2549010403266		. . HOUSING NP used on 001B, 001R SEE 25-41-51-07Z FOR DET		001
-050C	D2549020409466		. . HOUSING NP used on 001C SEE 25-41-51-490 FOR DET		001
-050D	D2549030409666		. . HOUSING NP used on 001D, 001Q SEE 25-41-51-07W FOR DET		001
-050E	D2549010402466		. . HOUSING NP used on 001E SEE 25-41-51-490 FOR DET		001
-050F	D2549030413466		. . HOUSING NP used on 001F SEE 25-41-51-490 FOR DET		001
-050G	D2549030414666		. . HOUSING NP used on 001G SEE 25-41-51-490 FOR DET		001
-050H	D2549010401466		. . HOUSING NP used on 001H SEE 25-41-51-07X FOR DET		001
-050J	D2549020402066		. . HOUSING NP used on 001J SEE 25-41-51-07Z FOR DET		001
-050K	D2549010613666		. . HOUSING NP used on 001K SEE 25-41-51-07U FOR DET		001
-050L	D2549040500466		. . HOUSING NP used on 001L, 001P SEE 25-41-51-07X FOR DET		001

- ITEM NOT ILLUSTRATED

FIG. ITEM	PART NUMBER	AIRLINE STOCK NUMBER	NOMENCLATURE 1234567		EFF CODE	UNITS PER ASSY
-050M	D2549020403266		. . HOUSING used on 001M SEE 25-41-51-07X FOR DET	NP		001
-050N	D2547161202866		. . HOUSING used on 001N SEE 25-41-51-49C FOR DET	NP		001
060A	D2549020401269		. . DOOR INSTL used on 001A, 001B, 001C, 001D, 001E, 001F, 001G, 001H, 001J, 001K, 001L, 001M, 001N, 001P, 001Q, 001R SEE 25-41-51-10A FOR DET	NP		001
070A	A225400278-514		. . DOOR ASSY-SINGLE used on 001A, 001L, 001P SEE 25-41-51-11H FOR DET			001
-070B	A225400276-924		. . DOOR ASSY-SINGLE used on 001B, 001R SEE 25-41-51-11E FOR DET			001
-070C	A225400276-948		. . DOOR ASSY-SINGLE used on 001C SEE 25-41-51-11G FOR DET			001
-070D	A225400278-536		. . DOOR ASSY-SINGLE used on 001D, 001Q SEE 25-41-51-11M FOR DET			001
-070E	A225400278-838		. . DOOR ASSY-SINGLE used on 001E SEE 25-41-51-11M FOR DET			001
-070F	A225400278-836		. . DOOR ASSY-SINGLE used on 001F SEE 25-41-51-11M FOR DET			001

- ITEM NOT ILLUSTRATED

FIG. ITEM	PART NUMBER	AIRLINE STOCK NUMBER	NOMENCLATURE 1234567	EFF CODE	UNITS PER ASSY
-070G	A225400276-970		. . DOOR ASSY-SINGLE used on 001G SEE 25-41-51-11L FOR DET		001
-070H	A225400276-936		. . DOOR ASSY-SINGLE used on 001H SEE 25-41-51-11G FOR DET		001
-070J	A225400276-574		. . DOOR ASSY-SINGLE used on 001J SEE 25-41-51-11E FOR DET		001
-070K	A225400276-904		. . DOOR ASSY-SINGLE used on 001K SEE 25-41-51-11B FOR DET		001
-070L	A225400276-966		. . DOOR ASSY-SINGLE used on 001M SEE 25-41-51-11J FOR DET		001
-070M	A225400263-902		. . DOOR ASSY-SINGLE used on 001N SEE 25-41-51-11R FOR DET		001
080A	D2549020811871		. . TOILET UNIT AND TOILET SHROUD NP used on 001A, 001D, 001E, 001J, 001K, 001L, 001P, 001Q SEE 25-41-51-12G FOR DET		001
-080B	D2549010610671		. . TOILET UNIT AND TOILET SHROUD NP used on 001B, 001R SEE 25-41-51-12G FOR DET		001
-080C	D2549020403271		. . TOILET UNIT AND TOILET SHROUD NP used on 001C, 001M SEE 25-41-51-12G FOR DET		001

- ITEM NOT ILLUSTRATED

FIG. ITEM	PART NUMBER	AIRLINE STOCK NUMBER	NOMENCLATURE 1234567		EFF CODE	UNITS PER ASSY
-080D	D2549030412271		. . TOILET UNIT AND TOILET SHROUD used on 001F SEE 25-41-51-12H FOR DET	NP		001
-080E	D2549030414671		. . TOILET UNIT AND TOILET SHROUD used on 001G SEE 25-41-51-12J FOR DET	NP		001
-080F	D2549010401471		. . TOILET UNIT AND TOILET SHROUD used on 001H SEE 25-41-51-12G FOR DET	NP		001
-080G	D2547161203471		. . TOILET UNIT AND TOILET SHROUD used on 001N SEE 25-41-51-12G FOR DET	NP		001
090A	D2549020409872		. . PAN-FLOOR used on 001A SEE 25-41-51-13Q FOR DET	NP		001
-090B	D2549010404672		. . PAN-FLOOR used on 001B, 001R SEE 25-41-51-13S FOR DET	NP		001
-090C	D2549030409672		. . PAN-FLOOR used on 001C, 001D, 001G, 001M, 001Q SEE 25-41-51-13N FOR DET	NP		001
-090D	D2549010402472		. . PAN-FLOOR used on 001E SEE 25-41-51-13S FOR DET	NP		001
-090E	D2549030410272		. . PAN-FLOOR used on 001F SEE 25-41-51-13N FOR DET	NP		001

- ITEM NOT ILLUSTRATED

FIG. ITEM	PART NUMBER	AIRLINE STOCK NUMBER	NOMENCLATURE 1234567	EFF CODE	UNITS PER ASSY
-090F	D2549010401472		. . PAN-FLOOR NP used on 001H SEE 25-41-51-13Q FOR DET		001
-090G	D2549030411672		. . PAN-FLOOR NP used on 001J SEE 25-41-51-13R FOR DET		001
-090H	D2549010613672		. . PAN-FLOOR NP used on 001K SEE 25-41-51-13Q FOR DET		001
-090J	D2549020400672		. . PAN-FLOOR NP used on 001L, 001P SEE 25-41-51-13N FOR DET		001
-090K	D2547161203472		. . PAN-FLOOR NP used on 001N SEE 25-41-51-13W FOR DET		001
100A	D2549010512673		. . LIGHT-DOOR NP used on 001A, 001B, 001C, 001E, 001H, 001J, 001K, 001M, 001R SEE 25-41-51-140 FOR DET		001
-100B	D2549030414673		. . LIGHT-DOOR NP used on 001D, 001G, 001Q SEE 25-41-51-14A FOR DET		001
-100C	D2549030408273		. . LIGHT-DOOR NP used on 001F SEE 25-41-51-14A FOR DET		001
-100D	D2549040501673		. . LIGHT-DOOR NP used on 001L, 001P SEE 25-41-51-14A FOR DET		001
-100E	D2547161202873		. . LIGHT-DOOR NP used on 001N SEE 25-41-51-14B FOR DET		001

- ITEM NOT ILLUSTRATED

FIG. ITEM	PART NUMBER	AIRLINE STOCK NUMBER	NOMENCLATURE 1234567		EFF CODE	UNITS PER ASSY
110A	D2549020706674		. . WASHBASIN UNIT used on 001A, 001K SEE 25-41-51-15D FOR DET	NP		001
-110B	D2549010404674		. . WASHBASIN UNIT used on 001B, 001R SEE 25-41-51-15M FOR DET	NP		001
-110C	D2549030410074		. . WASHBASIN UNIT used on 001C, 001J, 001L, 001P SEE 25-41-51-15L FOR DET	NP		001
-110D	D2549030409674		. . WASHBASIN UNIT used on 001D, 001Q SEE 25-41-51-15L FOR DET	NP		001
-110E	D2549010402474		. . WASHBASIN UNIT used on 001E SEE 25-41-51-15M FOR DET	NP		001
-110F	D2549030413474		. . WASHBASIN UNIT used on 001F SEE 25-41-51-15D FOR DET	NP		001
-110G	D2549030414674		. . WASHBASIN UNIT used on 001G SEE 25-41-51-15M FOR DET	NP		001
-110H	D2549010401474		. . WASHBASIN UNIT used on 001H SEE 25-41-51-15N FOR DET	NP		001
-110J	D2549020404074		. . WASHBASIN UNIT used on 001M SEE 25-41-51-15L FOR DET	NP		001
-110K	D2547161203474		. . WASHBASIN UNIT used on 001N SEE 25-41-51-15U FOR DET	NP		001

- ITEM NOT ILLUSTRATED

FIG. ITEM	PART NUMBER	AIRLINE STOCK NUMBER	NOMENCLATURE 1234567	EFF CODE	UNITS PER ASSY
120A	D2549030606075		. . DOOR ASSY-WASHBASIN UNIT NP used on 001A SEE 25-41-51-16E FOR DET		001
-120B	D2549010510475		. . DOOR ASSY-WASHBASIN UNIT NP used on 001B, 001R SEE 25-41-51-16B FOR DET		001
-120C	D2549020605475		. . DOOR ASSY-WASHBASIN UNIT NP used on 001C, 001M SEE 25-41-51-16C FOR DET		001
-120D	D2549020607075		. . DOOR ASSY-WASHBASIN UNIT NP used on 001D, 001E, 001J, 001K, 001L, 001P, 001Q SEE 25-41-51-16B FOR DET		001
-120E	D2549030506075		. . DOOR ASSY-WASHBASIN UNIT NP used on 001F SEE 25-41-51-16B FOR DET		001
-120F	D2549030414675		. . DOOR ASSY-WASHBASIN UNIT NP used on 001G SEE 25-41-51-16B FOR DET		001
-120G	D2549030506275		. . DOOR ASSY-WASHBASIN UNIT NP used on 001H SEE 25-41-51-16C FOR DET		001
-120H	D2547161202875		. . DOOR ASSY-WASHBASIN UNIT NP used on 001N SEE 25-41-51-16F FOR DET		001

- ITEM NOT ILLUSTRATED

FIG. ITEM	PART NUMBER	AIRLINE STOCK NUMBER	NOMENCLATURE 1234567	EFF CODE	UNITS PER ASSY
130A	D2549030504876		. . PANEL ASSY-WASHBASIN UNIT NP used on 001A, 001E, 001J, 001K, 001L, 001P SEE 25-41-51-17C FOR DET		001
-130B	D2549010604876		. . PANEL ASSY-WASHBASIN UNIT NP used on 001B, 001R SEE 25-41-51-17D FOR DET		001
-130C	D2549020605476		. . PANEL ASSY-WASHBASIN UNIT NP used on 001C, 001M SEE 25-41-51-17D FOR DET		001
-130D	D2549030409676		. . PANEL ASSY-WASHBASIN UNIT NP used on 001D, 001Q SEE 25-41-51-17D FOR DET		001
-130E	D2549030413476		. . PANEL ASSY-WASHBASIN UNIT NP used on 001F SEE 25-41-51-17E FOR DET		001
-130F	D2549030414676		. . PANEL ASSY-WASHBASIN UNIT NP used on 001G SEE 25-41-51-17E FOR DET		001
-130G	D2549030506276		. . PANEL ASSY-WASHBASIN UNIT NP used on 001H SEE 25-41-51-17C FOR DET		001
130H	D2547161202876		. . PANEL ASSY-WASHBASIN UNIT NP used on 001N SEE 25-41-51-17G FOR DET		001

- ITEM NOT ILLUSTRATED

FIG. ITEM	PART NUMBER	AIRLINE STOCK NUMBER	NOMENCLATURE 1234567	EFF CODE	UNITS PER ASSY
140A	D2549010611677		. . BIN-WASTE,CHUTE-WASTE AND EXTINGUISHER-FIRE NP used on 001A, 001B, 001C, 001D, 001E, 001F, 001G, 001H, 001J, 001K, 001L, 001M, 001P, 001Q, 001R SEE 25-41-51-180 FOR DET		001
-140B	D2547161203477		. . BIN-WASTE,CHUTE-WASTE AND EXTINGUISHER-FIRE NP used on 001N SEE 25-41-51-180 FOR DET		001
150A	D2549030504078		. . CABINET-SERVICE NP PRE VSB A2-254-25-022 used on 001A, 001B, 001H, 001L, 001R SEE 25-41-51-19E FOR DET		001
-150B	D2549030504878		. . CABINET-SERVICE NP used on 001C, 001J, 001K SEE 25-41-51-19E FOR DET		001
-150C	D2549030409678		. . CABINET-SERVICE NP PRE VSB A2-254-25-052 used on 001D SEE 25-41-51-19H FOR DET		001
-150D	D2549020407478		. . CABINET-SERVICE NP used on 001E, 001M SEE 25-41-51-19J FOR DET		001
-150E	D2549030408278		. . CABINET-SERVICE NP used on 001F SEE 25-41-51-19F FOR DET		001
-150F	D2549020708078		. . CABINET-SERVICE NP used on 001G SEE 25-41-51-19F FOR DET		001

- ITEM NOT ILLUSTRATED

FIG. ITEM	PART NUMBER	AIRLINE STOCK NUMBER	NOMENCLATURE 1234567		EFF CODE	UNITS PER ASSY
-150G	D2547161202878		. . CABINET-SERVICE used on 001N SEE 25-41-51-19K FOR DET	NP		001
-150H	R22540168800078		. . CABINET-SERVICE POST VSB A2-254-25-022 used on 001P SEE 25-41-51-19E FOR DET	NP		001
-150J	R22540167100078		. . CABINET-SERVICE POST VSB A2-254-25-052 used on 001Q SEE 25-41-51-19H FOR DET	NP		001
160A	D2549010510679		. . TABLE-NURSING used on 001A, 001B, 001C, 001E, 001K, 001L, 001M, 001P, 001R SEE 25-41-51-20A FOR DET	NP		001
-160B	D2549030614679		. . TABLE-NURSING used on 001D, 001N, 001Q SEE 25-41-51-20B FOR DET	NP		001
-160C	D2549030408279		. . TABLE-NURSING used on 001F SEE 25-41-51-20B FOR DET	NP		001
-160D	D2549030414679		. . TABLE-NURSING used on 001G SEE 25-41-51-20B FOR DET	NP		001
-160E	D2549010512679		. . TABLE-NURSING used on 001H, 001J SEE 25-41-51-20A FOR DET	NP		001
170A	D2549020802680		. . VENTILATION SYSTEM used on 001A, 001B, 001C, 001E, 001H, 001J, 001K, 001L, 001M, 001P, 001R SEE 25-41-51-21B FOR DET	NP		001

- ITEM NOT ILLUSTRATED

FIG. ITEM	PART NUMBER	AIRLINE STOCK NUMBER	NOMENCLATURE 1234567	EFF CODE	UNITS PER ASSY
-170B	D2549030614680		. . VENTILATION SYSTEM NP used on 001D, 001G, 001N, 001Q SEE 25-41-51-21B FOR DET		001
-170C	D2549030413480		. . VENTILATION SYSTEM NP used on 001F SEE 25-41-51-21B FOR DET		001
180A	D2549020401281		. . WATER SYSTEM-POTABLE NP used on 001A, 001C, 001D, 001E, 001G, 001H, 001K, 001L, 001P, 001Q SEE 25-41-51-22D FOR DET		001
-180B	D2549010606481		. . WATER SYSTEM-POTABLE NP used on 001B, 001R SEE 25-41-51-22F FOR DET		001
-180C	D2549030410081		. . WATER SYSTEM-POTABLE NP used on 001J, 001M SEE 25-41-51-22G FOR DET		001
-180D	D2549030700681		. . WATER SYSTEM-POTABLE NP used on 001F SEE 25-41-51-22F FOR DET		001
-180E	D2547161203481		. . WATER SYSTEM-POTABLE NP used on 001N SEE 25-41-51-22K FOR DET		001
190A	D2549020800882		. . WATER SYSTEM-WASTE NP used on 001A, 001C, 001K SEE 25-41-51-23D FOR DET		001
-190B	D2549010511082		. . WATER SYSTEM-WASTE NP used on 001B, 001D, 001E, 001L, 001P, 001Q, 001R SEE 25-41-51-23B FOR DET		001

- ITEM NOT ILLUSTRATED

FIG. ITEM	PART NUMBER	AIRLINE STOCK NUMBER	NOMENCLATURE 1234567		EFF CODE	UNITS PER ASSY
-190C	D2549030614682		. . WATER SYSTEM-WASTE used on 001M SEE 25-41-51-23D FOR DET	NP		001
-190D	D2549030405082		. . WATER SYSTEM-WASTE used on 001J SEE 25-41-51-23B FOR DET	NP		001
-190E	D2549030504882		. . WATER SYSTEM-WASTE used on 001F, 001G, 001H SEE 25-41-51-23B FOR DET	NP		001
-190F	D2549030402082		. . WATER SYSTEM-WASTE used on 001N SEE 25-41-51-23B FOR DET	NP		001
200A	D2549020409883		. . ELECTRICAL SYSTEM used on 001A, 001K SEE 25-41-51-26R FOR DET	NP		001
-200B	D2549010610683		. . ELECTRICAL SYSTEM used on 001B, 001R SEE 25-41-51-26R FOR DET	NP		001
-200C	D2549030410283		. . ELECTRICAL SYSTEM used on 001C, 001H, 001J, 001M SEE 25-41-51-26R FOR DET	NP		001
-200D	D2549030414283		. . ELECTRICAL SYSTEM used on 001D, 001L, 001P, 001Q SEE 25-41-51-26U FOR DET	NP		001
-200E	D2549010403483		. . ELECTRICAL SYSTEM used on 001E SEE 25-41-51-26R FOR DET	NP		001
-200F	D2549030413483		. . ELECTRICAL SYSTEM used on 001F SEE 25-41-51-26R FOR DET	NP		001

- ITEM NOT ILLUSTRATED

FIG. ITEM	PART NUMBER	AIRLINE STOCK NUMBER	NOMENCLATURE 1234567		EFF CODE	UNITS PER ASSY
-200G	D2549030413083		. . ELECTRICAL SYSTEM used on 001G SEE 25-41-51-26U FOR DET	NP		001
-200H	D2547161202883		. . ELECTRICAL SYSTEM used on 001N SEE 25-41-51-26V FOR DET	NP		001
210A	D9250000000285		. . ELECTRICAL SYSTEM-COCKPIT DOOR LOCKING used on 001A, 001B, 001C, 001D, 001E, 001F, 001G, 001H, 001J, 001K, 001L, 001M, 001N, 001P, 001Q, 001R SEE 25-41-51-31B FOR DET	NP		001

- ITEM NOT ILLUSTRATED

THIS PAGE IS INTENTIONALLY LEFT BLANK

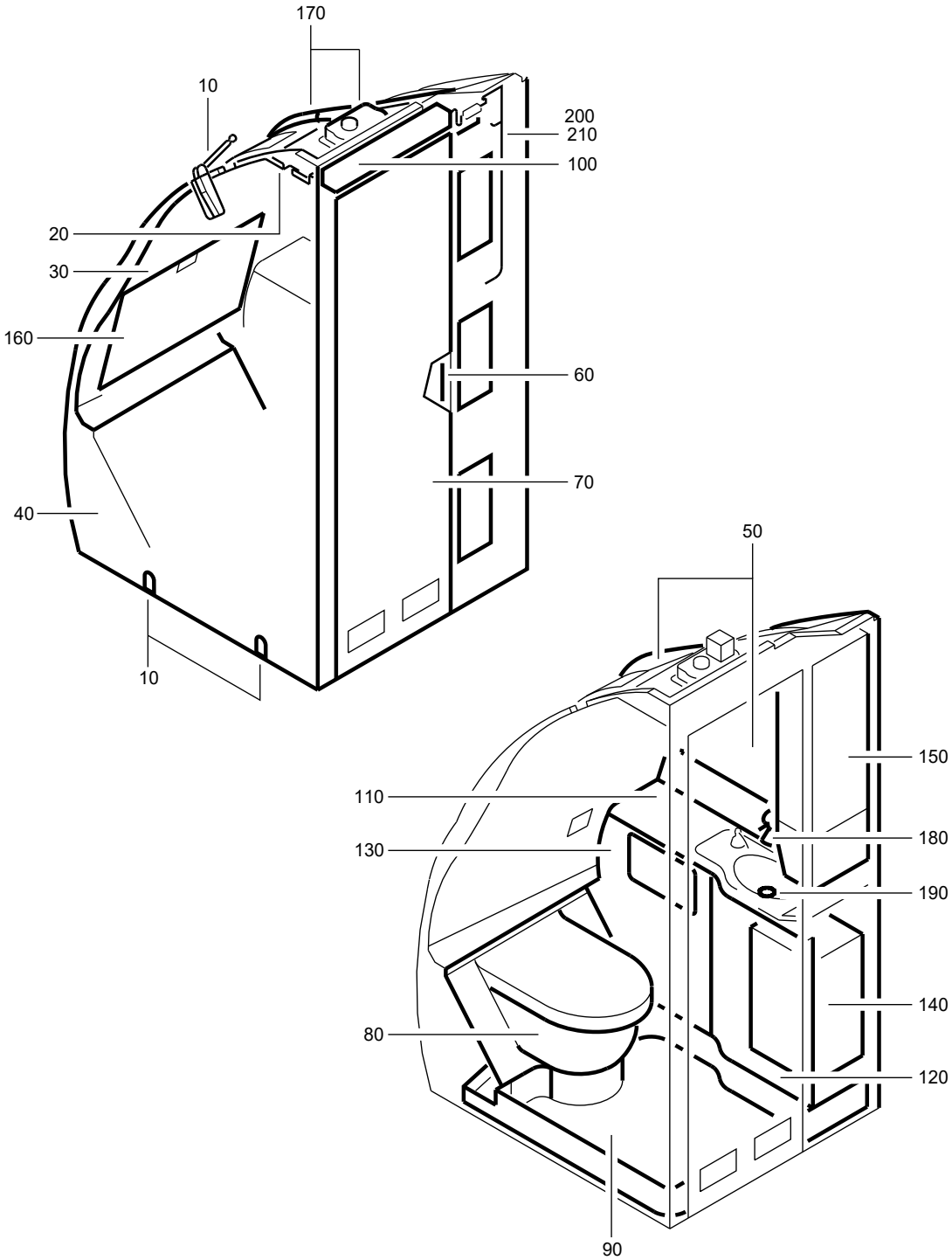

F_PL_254151_42_P_01_00

LAVATORY A ASSY
Figure 42P/EN254151SHEET42P01

FIG. ITEM	PART NUMBER	AIRLINE STOCK NUMBER	NOMENCLATURE 1234567	EFF CODE	UNITS PER ASSY
42P					
-001A	D2549020409600		. LAVATORY A ASSY SEE SIL 25-117 FOR DET		RF
-001B	D2549030700200		. LAVATORY A ASSY SEE SIL 25-117 FOR DET		RF
-001C	D2547160900400		. LAVATORY A ASSY POST SB 25-1360 SEE SIL 25-117 FOR DET		RF
-001D	D2549030409200		. LAVATORY A ASSY PRE VSB A2-254-25-069 SEE SIL 25-117 FOR DET		RF
-001E	D2549020411400		. LAVATORY A ASSY SEE SIL 25-117 FOR DET		RF
-001F	D2549030702200		. LAVATORY A ASSY PRE VSB A2-254-25-069 SEE SIL 25-117 FOR DET		RF
-001G	D2549020413600		. LAVATORY A ASSY PRE VSB A2-254-25-069 SEE SIL 25-117 FOR DET		RF
-001H	D2549020300800		. LAVATORY A ASSY SEE SIL 25-117 FOR DET		RF
-001J	D2549020413400		. LAVATORY A ASSY SEE SIL 25-117 FOR DET		RF
-001K	D2549010406200		. LAVATORY A ASSY SEE SIL 25-117 FOR DET		RF
-001L	D2549030702600		. LAVATORY A ASSY SEE SIL 25-117 FOR DET		RF
-001M	D2549020302800		. LAVATORY A ASSY PRE VSB A2-254-25-042 SEE SIL 25-117 FOR DET		RF

- ITEM NOT ILLUSTRATED

FIG. ITEM	PART NUMBER	AIRLINE STOCK NUMBER	NOMENCLATURE 1234567	EFF CODE	UNITS PER ASSY
-001N	D2549020402000		. LAVATORY A ASSY POST SB 25-1400 SEE SIL 25-117 FOR DET		RF
-001P	R225401196-024		. LAVATORY A ASSY PRE VSB A2-254-25-130 POST VSB A2-254-25-042 SEE SIL 25-117 FOR DET		RF
-001Q	R225401136-006		. LAVATORY A ASSY POST VSB A2-254-25-069		RF
-001R	R225401136-008		. LAVATORY A ASSY POST VSB A2-254-25-069		RF
-001S	R225401136-014		. LAVATORY A ASSY POST VSB A2-254-25-069		RF
-001T	R225401196-070		. LAVATORY A ASSY POST VSB A2-254-25-130 SEE SIL 25-117 FOR DET		RF
010A	D2549010613861		. . ATTACHMENT-LAVATORY NP used on 001A, 001C, 001N SEE 25-41-51-02C FOR DET		001
-010B	D2549010613661		. . ATTACHMENT-LAVATORY NP used on 001D, 001F, 001G, 001H, 001J, 001L, 001Q, 001R, 001S SEE 25-41-51-02D FOR DET		001
-010C	D2549040500861		. . ATTACHMENT-LAVATORY NP used on 001B, 001E, 001K SEE 25-41-51-02B FOR DET		001
-010D	D2549030401061		. . ATTACHMENT-LAVATORY NP PRE VSB A2-254-25-130 used on 001M, 001P SEE 25-41-51-02D FOR DET		001

- ITEM NOT ILLUSTRATED

FIG. ITEM	PART NUMBER	AIRLINE STOCK NUMBER	NOMENCLATURE 1234567	EFF CODE	UNITS PER ASSY
-010E	R22540119607061		. . ATTACHMENT-LAVATORY NP POST VSB A2-254-25-130 used on 001T SEE 25-41-51-02D FOR DET		001
020A	D2549030401463		. . PANEL-CEILING NP PRE VSB A2-254-25-130 used on 001A, 001B, 001C, 001D, 001E, 001H, 001J, 001K, 001L, 001M, 001N, 001P, 001Q SEE 25-41-51-040 FOR DET		001
-020B	D2549040500663		. . PANEL-CEILING NP used on 001F, 001G, 001R, 001S SEE 25-41-51-04A FOR DET		001
-020C	R22540119604663		. . PANEL-CEILING NP POST VSB A2-254-25-130 used on 001T SEE 25-41-51-040 FOR DET		001
030A	D2549010400864		. . WALL-REAR NP used on 001A, 001C, 001H SEE 25-41-51-05J FOR DET		001
-030B	D2549020805464		. . WALL-REAR NP PRE VSB A2-254-25-130 used on 001B, 001D, 001E, 001F, 001G, 001J, 001K, 001L, 001M, 001P, 001Q, 001R, 001S SEE 25-41-51-05H FOR DET		001
-030C	D2549020807864		. . WALL-REAR NP used on 001N SEE 25-41-51-05H FOR DET		001
-030D	D2549010613264		. . WALL-REAR NP POST VSB A2-254-25-130 used on 001T SEE 25-41-51-05H FOR DET		001

- ITEM NOT ILLUSTRATED

FIG. ITEM	PART NUMBER	AIRLINE STOCK NUMBER	NOMENCLATURE 1234567	EFF CODE	UNITS PER ASSY
040A	D2549010404465		. . WALL-SIDE NP used on 001A, 001H, 001K SEE 25-41-51-48K FOR DET		001
-040B	D2549020401265		. . WALL-SIDE NP used on 001B, 001J, 001L SEE 25-41-51-48D FOR DET		001
-040C	D2547160900465		. . WALL-SIDE NP used on 001C SEE 25-41-51-48K FOR DET		001
-040D	D2549020403465		. . WALL-SIDE NP used on 001D, 001Q SEE 25-41-51-48G FOR DET		001
-040E	D2549020411465		. . WALL-SIDE NP used on 001E SEE 25-41-51-48H FOR DET		001
-040F	D2549030702265		. . WALL-SIDE NP used on 001F, 001G, 001R, 001S SEE 25-41-51-48M FOR DET		001
-040G	D2549020402665		. . WALL-SIDE NP PRE VSB A2-254-25-042 used on 001M SEE 25-41-51-48D FOR DET		001
-040H	D2549020402065		. . WALL-SIDE NP used on 001N SEE 25-41-51-48H FOR DET		001
-040J	R22540119601865		. . WALL-SIDE NP PRE VSB A2-254-25-130 POST VSB A2-254-25-042 used on 001P SEE 25-41-51-48D FOR DET		001

- ITEM NOT ILLUSTRATED

FIG. ITEM	PART NUMBER	AIRLINE STOCK NUMBER	NOMENCLATURE 1234567		EFF CODE	UNITS PER ASSY
-040K	R22540119606465		. . WALL-SIDE POST VSB A2-254-25-130 used on 001T SEE 25-41-51-48D FOR DET	NP		001
050A	D2547160900266		. . HOUSING used on 001A, 001C, 001H SEE 25-41-51-07W FOR DET	NP		001
-050B	D2549020401266		. . HOUSING used on 001B SEE 25-41-51-07W FOR DET	NP		001
-050C	D2549020403466		. . HOUSING used on 001D, 001Q SEE 25-41-51-07W FOR DET	NP		001
-050D	D2549020411466		. . WALL-SIDE used on 001E SEE 25-41-51-49A FOR DET	NP		001
-050E	D2549030702266		. . HOUSING used on 001F, 001G, 001R, 001S SEE 25-41-51-49A FOR DET	NP		001
-050F	D2549020413466		. . HOUSING used on 001J, 001L SEE 25-41-51-49B FOR DET	NP		001
-050G	D2549010401466		. . HOUSING used on 001K SEE 25-41-51-07X FOR DET	NP		001
-050H	D2549020302866		. . HOUSING PRE VSB A2-254-25-130 used on 001M, 001P SEE 25-41-51-49B FOR DET	NP		001
-050J	D2549010500066		. . HOUSING used on 001N SEE 25-41-51-07Z FOR DET	NP		001

- ITEM NOT ILLUSTRATED

FIG. ITEM	PART NUMBER	AIRLINE STOCK NUMBER	NOMENCLATURE 1234567	EFF CODE	UNITS PER ASSY
-050K	R22540119607066		. . HOUSING NP POST VSB A2-254-25-130 used on 001T SEE 25-41-51-49B FOR DET		001
060A	D2549020401269		. . DOOR INSTL NP used on 001A, 001B, 001C, 001D, 001E, 001F, 001G, 001H, 001J, 001K, 001L, 001M, 001N, 001P, 001Q, 001R, 001S, 001T SEE 25-41-51-10A FOR DET		001
070A	A225400278-840		. . DOOR ASSY-SINGLE used on 001A, 001H SEE 25-41-51-11P FOR DET		001
-070B	A225400276-588		. . DOOR ASSY-SINGLE used on 001B, 001J, 001L SEE 25-41-51-11F FOR DET		001
-070C	A225400278-832		. . DOOR ASSY-SINGLE used on 001C SEE 25-41-51-11M FOR DET		001
-070D	A225400276-576		. . DOOR ASSY-SINGLE used on 001D, 001F, 001G, 001Q, 001R, 001S SEE 25-41-51-11E FOR DET		001
-070E	A225400276-942		. . DOOR ASSY-SINGLE used on 001E, 001N SEE 25-41-51-11F FOR DET		001
-070F	A225400276-936		. . DOOR ASSY-SINGLE used on 001K SEE 25-41-51-11G FOR DET		001
-070G	A225400276-952		. . DOOR ASSY-SINGLE PRE VSB A2-254-25-130 used on 001M, 001P SEE 25-41-51-11G FOR DET		001

- ITEM NOT ILLUSTRATED

FIG. ITEM	PART NUMBER	AIRLINE STOCK NUMBER	NOMENCLATURE 1234567		EFF CODE	UNITS PER ASSY
-070H	A225400263-990		. . DOOR ASSY-SINGLE POST VSB A2-254-25-130 used on 001T SEE 25-41-51-11G FOR DET			001
080A	D2549010401471		. . TOILET UNIT AND TOILET SHROUD used on 001A, 001C, 001H, 001K SEE 25-41-51-12G FOR DET	NP		001
-080B	D2549020811871		. . TOILET UNIT AND TOILET SHROUD PRE VSB A2-254-25-130 used on 001B, 001D, 001F, 001G, 001J, 001L, 001M, 001P, 001Q, 001R, 001S SEE 25-41-51-12G FOR DET	NP		001
-080C	D2549030410071		. . TOILET UNIT AND TOILET SHROUD used on 001E, 001N SEE 25-41-51-12G FOR DET	NP		001
-080D	R22540119605871		. . TOILET UNIT AND TOILET SHROUD POST VSB A2-254-25-130 used on 001T SEE 25-41-51-12G FOR DET	NP		001
090A	D2549010401472		. . PAN-FLOOR used on 001A, 001C, 001H, 001K SEE 25-41-51-13Q FOR DET	NP		001
-090B	D2549020401272		. . PAN-FLOOR used on 001B, 001J, 001L SEE 25-41-51-13N FOR DET	NP		001
-090C	D2549030409672		. . PAN-FLOOR used on 001D, 001Q SEE 25-41-51-13N FOR DET	NP		001

- ITEM NOT ILLUSTRATED

FIG. ITEM	PART NUMBER	AIRLINE STOCK NUMBER	NOMENCLATURE 1234567	EFF CODE	UNITS PER ASSY
-090D	D2549020402072		. . PAN-FLOOR NP used on 001E, 001N SEE 25-41-51-13S FOR DET		001
-090E	D2549020410872		. . PAN-FLOOR NP used on 001F, 001G, 001R, 001S SEE 25-41-51-13S FOR DET		001
-090F	D2549020409072		. . PAN-FLOOR NP PRE VSB A2-254-25-130 used on 001M, 001P SEE 25-41-51-13Q FOR DET		001
-090G	R22540119606872		. . PAN-FLOOR NP POST VSB A2-254-25-130 used on 001T SEE 25-41-51-13Q FOR DET		001
100A	D2549010512673		. . LIGHT-DOOR NP PRE VSB A2-254-25-130 used on 001A, 001B, 001C, 001D, 001E, 001H, 001J, 001K, 001L, 001M, 001N, 001P, 001Q SEE 25-41-51-140 FOR DET		001
-100B	D2549040501673		. . LIGHT-DOOR NP used on 001F, 001G, 001R, 001S SEE 25-41-51-14A FOR DET		001
-100C	R22540119604673		. . LIGHT-DOOR NP POST VSB A2-254-25-130 used on 001T SEE 25-41-51-14C FOR DET		001
110A	D2549010401474		. . WASHBASIN UNIT NP used on 001A, 001C SEE 25-41-51-15N FOR DET		001
-110B	D2549020401274		. . WASHBASIN UNIT NP used on 001B SEE 25-41-51-15L FOR DET		001

- ITEM NOT ILLUSTRATED

FIG. ITEM	PART NUMBER	AIRLINE STOCK NUMBER	NOMENCLATURE 1234567		EFF CODE	UNITS PER ASSY
-110C	D2549020403474		. . WASHBASIN UNIT used on 001D, 001Q SEE 25-41-51-15L FOR DET	NP		001
-110D	D2549030410074		. . WASHBASIN UNIT used on 001E, 001N SEE 25-41-51-15L FOR DET	NP		001
-110E	D2549030702274		. . WASHBASIN UNIT used on 001F, 001G, 001R, 001S SEE 25-41-51-15Q FOR DET	NP		001
-110F	D2549020300874		. . WASHBASIN UNIT used on 001H, 001K SEE 25-41-51-15Q FOR DET	NP		001
-110G	D2549020413474		. . WASHBASIN UNIT used on 001J, 001L SEE 25-41-51-15R FOR DET	NP		001
-110H	D2549020402674		. . WASHBASIN UNIT PRE VSB A2-254-25-130 used on 001M, 001P SEE 25-41-51-15L FOR DET	NP		001
-110J	R22540119606474		. . WASHBASIN UNIT POST VSB A2-254-25-130 used on 001T SEE 25-41-51-15L FOR DET	NP		001
120A	D2549030506275		. . DOOR ASSY-WASHBASIN UNIT used on 001A, 001C, 001H, 001K SEE 25-41-51-16C FOR DET	NP		001
-120B	D2549020607075		. . DOOR ASSY-WASHBASIN UNIT used on 001B, 001D, 001F, 001G, 001Q, 001R, 001S SEE 25-41-51-16B FOR DET	NP		001

- ITEM NOT ILLUSTRATED

FIG. ITEM	PART NUMBER	AIRLINE STOCK NUMBER	NOMENCLATURE 1234567	EFF CODE	UNITS PER ASSY
-120C	D2549020607675		. . DOOR ASSY-WASHBASIN UNIT NP used on 001E, 001N SEE 25-41-51-16C FOR DET		001
-120D	D2549030606075		. . DOOR ASSY-WASHBASIN UNIT NP PRE VSB A2-254-25-130 used on 001J, 001L, 001M, 001P SEE 25-41-51-16E FOR DET		001
-120E	R22540119606275		. . DOOR ASSY-WASHBASIN UNIT NP POST VSB A2-254-25-130 used on 001T SEE 25-41-51-16E FOR DET		001
130A	D2549030506276		. . PANEL ASSY-WASHBASIN UNIT NP used on 001A, 001C, 001H, 001K SEE 25-41-51-17C FOR DET		001
-130B	D2549030504876		. . PANEL ASSY-WASHBASIN UNIT NP used on 001B, 001D, 001F, 001G, 001J, 001L, 001Q, 001R, 001S SEE 25-41-51-17C FOR DET		001
-130C	D2549020607676		. . PANEL ASSY-WASHBASIN UNIT NP used on 001E, 001N SEE 25-41-51-17C FOR DET		001
-130D	D2549030511076		. . PANEL ASSY-WASHBASIN UNIT NP used on 001M, 001P, 001T SEE 25-41-51-17D FOR DET		001

- ITEM NOT ILLUSTRATED

FIG. ITEM	PART NUMBER	AIRLINE STOCK NUMBER	NOMENCLATURE 1234567		EFF CODE	UNITS PER ASSY
140A	D2549010611677		. . BIN-WASTE,CHUTE-WASTE AND EXTINGUISHER-FIRE used on 001A, 001B, 001C, 001D, 001E, 001F, 001G, 001H, 001J, 001K, 001L, 001M, 001N, 001P, 001Q, 001R, 001S, 001T SEE 25-41-51-180 FOR DET	NP		001
150A	D2549030504078		. . CABINET-SERVICE used on 001A, 001C, 001H, 001K SEE 25-41-51-19E FOR DET	NP		001
-150B	D2549030505878		. . CABINET-SERVICE used on 001B, 001J, 001L SEE 25-41-51-19E FOR DET	NP		001
-150C	D2549030504878		. . CABINET-SERVICE PRE VSB A2-254-25-042 used on 001D, 001E, 001F, 001G, 001M, 001N, 001Q, 001R, 001S SEE 25-41-51-19E FOR DET	NP		001
-150D	R22540114200078		. . CABINET-SERVICE PRE VSB A2-254-25-130 POST VSB A2-254-25-042 used on 001P SEE 25-41-51-19E FOR DET	NP		001
-150E	R22540119604678		. . CABINET-SERVICE POST VSB A2-254-25-130 used on 001T SEE 25-41-51-19E FOR DET	NP		001
160A	D2549010510679		. . TABLE-NURSING used on 001A, 001C, 001D, 001E, 001F, 001G, 001H, 001N, 001Q, 001R, 001S SEE 25-41-51-20A FOR DET	NP		001

- ITEM NOT ILLUSTRATED

FIG. ITEM	PART NUMBER	AIRLINE STOCK NUMBER	NOMENCLATURE 1234567		EFF CODE	UNITS PER ASSY
-160B	D2549010512679		. . TABLE-NURSING PRE VSB A2-254-25-130 used on 001B, 001J, 001K, 001L, 001M, 001P SEE 25-41-51-20A FOR DET	NP		001
-160C	R22540119604679		. . TABLE-NURSING POST VSB A2-254-25-130 used on 001T SEE 25-41-51-20A FOR DET	NP		001
170A	D2549020802680		. . VENTILATION SYSTEM PRE VSB A2-254-25-130 used on 001A, 001B, 001C, 001D, 001E, 001F, 001G, 001H, 001J, 001K, 001L, 001M, 001N, 001P, 001Q, 001R, 001S SEE 25-41-51-21B FOR DET	NP		001
-170B	R22540119605280		. . VENTILATION SYSTEM POST VSB A2-254-25-130 used on 001T SEE 25-41-51-21B FOR DET	NP		001
180A	D2549020401281		. . WATER SYSTEM-POTABLE used on 001A, 001B, 001C, 001D, 001E, 001F, 001G, 001H, 001J, 001K, 001L, 001M, 001N, 001P, 001Q, 001R, 001S SEE 25-41-51-22D FOR DET	NP		001
-180B	R22540119606481		. . WATER SYSTEM-POTABLE used on 001T SEE 25-41-51-22D FOR DET	NP		001
190A	D2549030504882		. . WATER SYSTEM-WASTE used on 001A, 001B, 001C, 001H, 001J, 001K, 001L SEE 25-41-51-23B FOR DET	NP		001

- ITEM NOT ILLUSTRATED

FIG. ITEM	PART NUMBER	AIRLINE STOCK NUMBER	NOMENCLATURE 1234567		EFF CODE	UNITS PER ASSY
-190B	D2549010511082		. . WATER SYSTEM-WASTE used on 001D, 001E, 001F, 001G, 001M, 001N, 001P, 001Q, 001R, 001S, 001T SEE 25-41-51-23B FOR DET	NP		001
200A	D2549030410283		. . ELECTRICAL SYSTEM PRE VSB A2-254-25-130 used on 001A, 001C, 001D, 001E, 001H, 001K, 001M, 001N, 001P, 001Q SEE 25-41-51-26R FOR DET	NP		001
-200B	D2549020401283		. . ELECTRICAL SYSTEM used on 001B, 001J, 001L SEE 25-41-51-26R FOR DET	NP		001
-200C	D2549030414283		. . ELECTRICAL SYSTEM used on 001F, 001G, 001R, 001S SEE 25-41-51-26U FOR DET	NP		001
-200D	R22540119606483		. . ELECTRICAL SYSTEM POST VSB A2-254-25-130 used on 001T SEE 25-41-51-26R FOR DET	NP		001
210A	D9250000000285		. . ELECTRICAL SYSTEM-COCKPIT DOOR LOCKING used on 001A, 001B, 001C, 001D, 001E, 001F, 001G, 001H, 001K, 001M, 001N, 001P, 001Q, 001R, 001S, 001T SEE 25-41-51-31B FOR DET	NP		001
-210B	D9250000000585		. . ELECTRICAL SYSTEM-COCKPIT DOOR LOCKING used on 001J, 001L SEE 25-41-51-31C FOR DET	NP		001

- ITEM NOT ILLUSTRATED

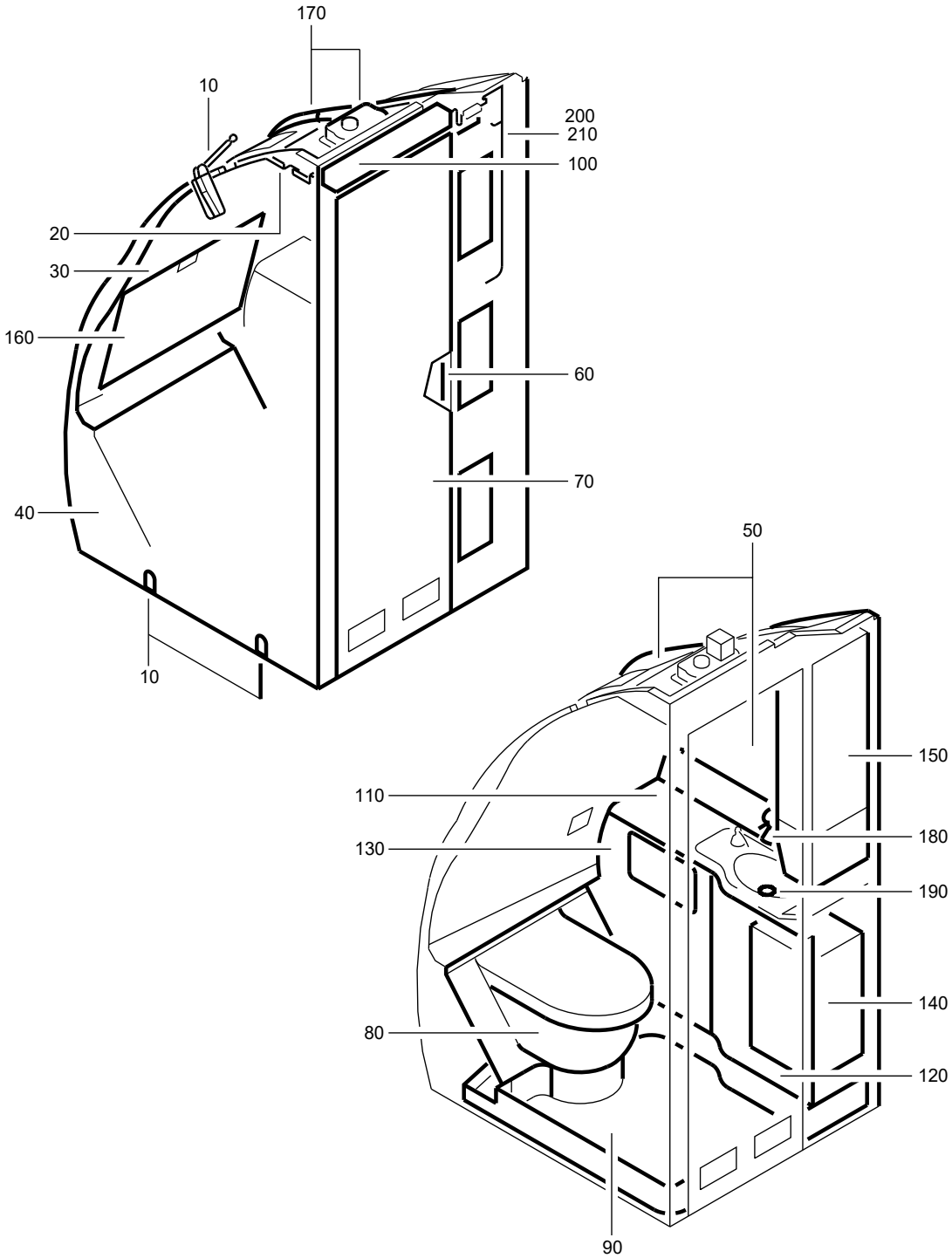

F_PL_254151_42_Q_01_00

LAVATORY A ASSY
Figure 42Q/EN254151SHEET42Q01

FIG. ITEM	PART NUMBER	AIRLINE STOCK NUMBER	NOMENCLATURE 1234567	EFF CODE	UNITS PER ASSY
42Q					
-001A	D2549020410800		. LAVATORY A ASSY SEE SIL 25-117 FOR DET		RF
-001B	D2549010405000		. LAVATORY A ASSY SEE SIL 25-117 FOR DET		RF
-001C	D2549030700600		. LAVATORY A ASSY SEE SIL 25-117 FOR DET		RF
-001D	D2549010405200		. LAVATORY A ASSY SEE SIL 25-117 FOR DET		RF
-001E	D2549030700800		. LAVATORY A ASSY SEE SIL 25-117 FOR DET		RF
-001F	D2549020411000		. LAVATORY A ASSY SEE SIL 25-117 FOR DET		RF
-001G	D2549040501400		. LAVATORY A ASSY POST SB 25-1473 PRE VSB A2-254-25-080 SEE SIL 25-117 FOR DET		RF
-001H	D2549020411200		. LAVATORY A ASSY SEE SIL 25-117 FOR DET		RF
-001J	D2549030701000		. LAVATORY A ASSY SEE SIL 25-117 FOR DET		RF
-001K	D2549010405400		. LAVATORY A ASSY SEE SIL 25-117 FOR DET		RF
-001L	D2549040501800		. LAVATORY A ASSY PRE VSB A2-254-25-070 SEE SIL 25-117 FOR DET		RF
-001M	D2549020411600		. LAVATORY A ASSY PRE VSB A2-254-25-083 SEE SIL 25-117 FOR DET		RF

- ITEM NOT ILLUSTRATED

FIG. ITEM	PART NUMBER	AIRLINE STOCK NUMBER	NOMENCLATURE 1234567	EFF CODE	UNITS PER ASSY
-001N	D2549040501400		. LAVATORY A ASSY SEE SIL 25-117 FOR DET		RF
-001P	R225401673-006		. LAVATORY A ASSY POST VSB A2-254-25-080 SEE SIL 25-117 FOR DET		RF
-001Q	R225401627-004		. LAVATORY A ASSY POST VSB A2-254-25-083		RF
-001R	R225401803-000		. LAVATORY A ASSY POST VSB A2-254-25-070		RF
010A	D2549010613661		. . ATTACHMENT-LAVATORY NP used on 001A, 001B, 001G, 001J, 001K, 001L, 001N, 001P, 001R SEE 25-41-51-02D FOR DET		001
-010B	D2549030414061		. . ATTACHMENT-LAVATORY NP used on 001C SEE 25-41-51-02B FOR DET		001
-010C	D2549040500861		. . ATTACHMENT-LAVATORY NP used on 001D, 001E, 001F, 001M, 001Q SEE 25-41-51-02B FOR DET		001
-010D	D2549020411261		. . ATTACHMENT-LAVATORY NP used on 001H SEE 25-41-51-02D FOR DET		001
020A	D2549030401463		. . PANEL-CEILING NP used on 001A, 001B, 001F, 001J, 001K, 001M, 001Q SEE 25-41-51-040 FOR DET		001
-020B	D2549030409663		. . PANEL-CEILING NP used on 001C SEE 25-41-51-04A FOR DET		001

- ITEM NOT ILLUSTRATED

FIG. ITEM	PART NUMBER	AIRLINE STOCK NUMBER	NOMENCLATURE 1234567	EFF CODE	UNITS PER ASSY
-020C	D2549040500663		. . PANEL-CEILING NP used on 001D, 001E, 001G, 001L, 001N, 001P, 001R SEE 25-41-51-04A FOR DET		001
-020D	D2549020411263		. . PANEL-CEILING NP used on 001H SEE 25-41-51-04A FOR DET		001
030A	D2549030406464		. . WALL-REAR NP used on 001A, 001L, 001R SEE 25-41-51-05F FOR DET		001
-030B	D2549020805464		. . WALL-REAR NP used on 001B, 001D, 001F, 001K SEE 25-41-51-05H FOR DET		001
-030C	D2549010613264		. . WALL-REAR NP used on 001C SEE 25-41-51-05H FOR DET		001
-030D	D2549030700864		. . WALL-REAR NP used on 001E SEE 25-41-51-05H FOR DET		001
-030E	D2549020812264		. . WALL-REAR NP used on 001G, 001N, 001P SEE 25-41-51-05H FOR DET		001
-030F	D2549020411264		. . WALL-REAR NP used on 001H SEE 25-41-51-05J FOR DET		001
-030G	D2549010400864		. . WALL-REAR NP used on 001J SEE 25-41-51-05J FOR DET		001
-030H	D2549020807864		. . WALL-REAR NP used on 001M, 001Q SEE 25-41-51-05H FOR DET		001

- ITEM NOT ILLUSTRATED

FIG. ITEM	PART NUMBER	AIRLINE STOCK NUMBER	NOMENCLATURE 1234567	EFF CODE	UNITS PER ASSY
040A	D2549020410865		. . WALL-SIDE NP used on 001A SEE 25-41-51-48L FOR DET		001
-040B	D2549010405065		. . WALL-SIDE NP used on 001B SEE 25-41-51-48L FOR DET		001
-040C	D2549030700665		. . WALL-SIDE NP used on 001C SEE 25-41-51-48J FOR DET		001
-040D	D2549010405265		. . WALL-SIDE NP used on 001D SEE 25-41-51-48A FOR DET		001
-040E	D2549030700865		. . WALL-SIDE NP used on 001E SEE 25-41-51-48A FOR DET		001
-040F	D2549020406665		. . WALL-SIDE NP used on 001F, 001J SEE 25-41-51-48H FOR DET		001
-040G	D2549040500865		. . WALL-SIDE NP PRE VSB A2-254-25-080 used on 001G SEE 25-41-51-48A FOR DET		001
-040H	D2549020411265		. . WALL-SIDE NP used on 001H SEE 25-41-51-48A FOR DET		001
-040J	D2549010405465		. . WALL-SIDE NP used on 001K SEE 25-41-51-48L FOR DET		001
-040K	D2549040501865		. . WALL-SIDE NP used on 001L, 001R SEE 25-41-51-48J FOR DET		001

- ITEM NOT ILLUSTRATED

FIG. ITEM	PART NUMBER	AIRLINE STOCK NUMBER	NOMENCLATURE 1234567		EFF CODE	UNITS PER ASSY
-040L	D2549020411665		. . WALL-SIDE used on 001M, 001Q SEE 25-41-51-48L FOR DET	NP		001
-040M	R22540167300265		. . WALL-SIDE POST VSB A2-254-25-080 used on 001P SEE 25-41-51-48A FOR DET	NP		001
050A	D2549010402266		. . HOUSING used on 001A SEE 25-41-51-07X FOR DET	NP		001
-050B	D2549010405066		. . HOUSING used on 001B SEE 25-41-51-490 FOR DET	NP		001
-050C	D2549030700666		. . HOUSING used on 001C SEE 25-41-51-490 FOR DET	NP		001
-050D	D2549010405266		. . HOUSING used on 001D SEE 25-41-51-490 FOR DET	NP		001
-050E	D2549030700866		. . HOUSING used on 001E SEE 25-41-51-490 FOR DET	NP		001
-050F	D2549020411066		. . HOUSING used on 001F, 001J SEE 25-41-51-49A FOR DET	NP		001
-050G	D2549040501466		. . HOUSING used on 001N SEE 25-41-51-49A FOR DET	NP		001
-050H	D2549020411266		. . HOUSING used on 001H SEE 25-41-51-490 FOR DET	NP		001

- ITEM NOT ILLUSTRATED

FIG. ITEM	PART NUMBER	AIRLINE STOCK NUMBER	NOMENCLATURE 1234567	EFF CODE	UNITS PER ASSY
-050J	D2549020411666		. . WALL-SIDE NP used on 001M, 001Q SEE 25-41-51-490 FOR DET		001
-050K	D2549020406066		. . HOUSING NP used on 001K SEE 25-41-51-07X FOR DET		001
-050L	D2549040500466		. . HOUSING NP used on 001L, 001R SEE 25-41-51-07X FOR DET		001
-050M	D2549040501466		. . HOUSING NP POST SB 25-1473 used on 001G, 001P SEE 25-41-51-49A FOR DET		001
060A	D2549020401269		. . DOOR INSTL NP used on 001A, 001B, 001C, 001D, 001E, 001F, 001G, 001H, 001J, 001K, 001L, 001M, 001N, 001P, 001Q, 001R SEE 25-41-51-10A FOR DET		001
070A	A225400278-834		. . DOOR ASSY-SINGLE used on 001A, 001D SEE 25-41-51-11M FOR DET		001
-070B	A225400276-928		. . DOOR ASSY-SINGLE used on 001B SEE 25-41-51-11F FOR DET		001
-070C	A225400278-536		. . DOOR ASSY-SINGLE used on 001C SEE 25-41-51-11M FOR DET		001
-070D	A225400278-842		. . DOOR ASSY-SINGLE used on 001E SEE 25-41-51-11P FOR DET		001

- ITEM NOT ILLUSTRATED

FIG. ITEM	PART NUMBER	AIRLINE STOCK NUMBER	NOMENCLATURE 1234567	EFF CODE	UNITS PER ASSY
-070E	A225400276-946		. . DOOR ASSY-SINGLE used on 001F, 001J SEE 25-41-51-11G FOR DET		001
-070F	A225400276-934		. . DOOR ASSY-SINGLE used on 001G, 001N, 001P SEE 25-41-51-11F FOR DET		001
-070G	A225400278-844		. . DOOR ASSY-SINGLE used on 001H SEE 25-41-51-11P FOR DET		001
-070H	A225400278-538		. . DOOR ASSY-SINGLE used on 001K SEE 25-41-51-11M FOR DET		001
-070J	A225400278-514		. . DOOR ASSY-SINGLE used on 001L, 001R SEE 25-41-51-11H FOR DET		001
-070K	A225400278-846		. . DOOR ASSY-SINGLE used on 001M, 001Q SEE 25-41-51-11P FOR DET		001
080A	D2549020811871		. . TOILET UNIT AND TOILET SHROUD NP used on 001A, 001F, 001G, 001H, 001J, 001M, 001N, 001P, 001Q SEE 25-41-51-12G FOR DET		001
-080B	D2549020400871		. . TOILET UNIT AND TOILET SHROUD NP used on 001B SEE 25-41-51-12G FOR DET		001
-080C	D2549030700671		. . TOILET UNIT AND TOILET SHROUD NP used on 001C SEE 25-41-51-12H FOR DET		001

- ITEM NOT ILLUSTRATED

FIG. ITEM	PART NUMBER	AIRLINE STOCK NUMBER	NOMENCLATURE 1234567		EFF CODE	UNITS PER ASSY
-080D	D2549030410071		. . TOILET UNIT AND TOILET SHROUD used on 001D, 001K SEE 25-41-51-12G FOR DET	NP		001
-080E	D2549030700871		. . TOILET UNIT AND TOILET SHROUD used on 001E SEE 25-41-51-12H FOR DET	NP		001
-080F	D2549030412471		. . TOILET UNIT AND TOILET SHROUD used on 001L, 001R SEE 25-41-51-12G FOR DET	NP		001
090A	D2549030409672		. . PAN-FLOOR used on 001C SEE 25-41-51-13N FOR DET	NP		001
-090B	D2549020401672		. . PAN-FLOOR used on 001B SEE 25-41-51-13P FOR DET	NP		001
-090C	D2549020400672		. . PAN-FLOOR used on 001D SEE 25-41-51-13N FOR DET	NP		001
-090D	D2549030700872		. . PAN-FLOOR used on 001E SEE 25-41-51-13S FOR DET	NP		001
-090E	D2549030410072		. . PAN-FLOOR used on 001F, 001J SEE 25-41-51-13N FOR DET	NP		001
-090F	D2549040500872		. . PAN-FLOOR used on 001G, 001N, 001P SEE 25-41-51-13P FOR DET	NP		001

- ITEM NOT ILLUSTRATED

FIG. ITEM	PART NUMBER	AIRLINE STOCK NUMBER	NOMENCLATURE 1234567		EFF CODE	UNITS PER ASSY
-090G	D2549020400672		. . PAN-FLOOR used on 001H, 001M, 001Q SEE 25-41-51-13N FOR DET	NP		001
-090H	D2549010405472		. . PAN-FLOOR used on 001K SEE 25-41-51-13S FOR DET	NP		001
-090J	D2549030411472		. . PAN-FLOOR used on 001L, 001R SEE 25-41-51-13P FOR DET	NP		001
-090K	D2549020410872		. . PAN-FLOOR used on 001A SEE 25-41-51-13S FOR DET	NP		001
100A	D2549010512673		. . LIGHT-DOOR used on 001A, 001B, 001F, 001J, 001K, 001M, 001Q SEE 25-41-51-140 FOR DET	NP		001
-100B	D2549030414673		. . LIGHT-DOOR used on 001C SEE 25-41-51-14A FOR DET	NP		001
-100C	D2549040501673		. . LIGHT-DOOR used on 001D, 001E, 001G, 001L, 001N, 001P, 001R SEE 25-41-51-14A FOR DET	NP		001
-100D	D2549020411273		. . LIGHT-DOOR used on 001H SEE 25-41-51-14A FOR DET	NP		001
110A	D2549030410074		. . WASHBASIN UNIT used on 001A, 001F, 001J, 001K, 001L, 001R SEE 25-41-51-15L FOR DET	NP		001

- ITEM NOT ILLUSTRATED

FIG. ITEM	PART NUMBER	AIRLINE STOCK NUMBER	NOMENCLATURE 1234567	EFF CODE	UNITS PER ASSY
-110B	D2549020401674		. . WASHBASIN UNIT NP used on 001B SEE 25-41-51-15M FOR DET		001
-110C	D2549010404674		. . WASHBASIN UNIT NP used on 001C SEE 25-41-51-15M FOR DET		001
-110D	D2549010405274		. . WASHBASIN UNIT NP used on 001D SEE 25-41-51-15M FOR DET		001
-110E	D2549020404074		. . WASHBASIN UNIT NP used on 001E, 001M, 001Q SEE 25-41-51-15L FOR DET		001
-110F	D2549040500674		. . WASHBASIN UNIT NP used on 001G, 001N, 001P SEE 25-41-51-15L FOR DET		001
-110G	D2549020411274		. . WASHBASIN UNIT NP used on 001H SEE 25-41-51-15M FOR DET		001
120A	D2549020607075		. . DOOR ASSY-WASHBASIN UNIT NP used on 001A, 001F SEE 25-41-51-16B FOR DET		001
-120B	D2549010609875		. . DOOR ASSY-WASHBASIN UNIT NP used on 001B SEE 25-41-51-16C FOR DET		001
-120C	D2549030606075		. . DOOR ASSY-WASHBASIN UNIT NP used on 001C, 001G, 001H, 001J, 001M, 001N, 001P, 001Q SEE 25-41-51-16E FOR DET		001

- ITEM NOT ILLUSTRATED

FIG. ITEM	PART NUMBER	AIRLINE STOCK NUMBER	NOMENCLATURE 1234567		EFF CODE	UNITS PER ASSY
-120D	D2549020607675		. . DOOR ASSY-WASHBASIN UNIT used on 001D, 001K SEE 25-41-51-16C FOR DET	NP		001
-120E	D2549010511475		. . DOOR ASSY-WASHBASIN UNIT used on 001E SEE 25-41-51-16B FOR DET	NP		001
-120F	D2549030504675		. . DOOR ASSY-WASHBASIN UNIT used on 001L, 001R SEE 25-41-51-16B FOR DET	NP		001
130A	D2549030504876		. . PANEL ASSY-WASHBASIN UNIT used on 001A, 001F, 001G, 001H, 001J, 001M, 001N, 001P, 001Q SEE 25-41-51-17C FOR DET	NP		001
-130B	D2549010609876		. . PANEL ASSY-WASHBASIN UNIT used on 001B SEE 25-41-51-17D FOR DET	NP		001
-130C	D2549020607676		. . PANEL ASSY-WASHBASIN UNIT used on 001D, 001K SEE 25-41-51-17C FOR DET	NP		001
-130D	D2549010511476		. . PANEL ASSY-WASHBASIN UNIT used on 001E SEE 25-41-51-17C FOR DET	NP		001
-130E	D2549030511076		. . PANEL ASSY-WASHBASIN UNIT used on 001C SEE 25-41-51-17D FOR DET	NP		001

- ITEM NOT ILLUSTRATED

FIG. ITEM	PART NUMBER	AIRLINE STOCK NUMBER	NOMENCLATURE 1234567		EFF CODE	UNITS PER ASSY
-130F	D2549030504676		. . PANEL ASSY-WASHBASIN UNIT used on 001L, 001R SEE 25-41-51-17C FOR DET	NP		001
140A	D2549010611677		. . BIN-WASTE,CHUTE-WASTE AND EXTINGUISHER-FIRE used on 001A, 001B, 001C, 001D, 001F, 001G, 001H, 001J, 001K, 001L, 001M, 001N, 001P, 001Q, 001R SEE 25-41-51-180 FOR DET	NP		001
-140B	D2549030504877		. . BIN-WASTE,CHUTE-WASTE AND EXTINGUISHER-FIRE used on 001E SEE 25-41-51-180 FOR DET	NP		001
150A	D2549030504878		. . CABINET-SERVICE PRE VSB A2-254-25-080 used on 001A, 001B, 001G, 001K, 001M, 001N, 001Q SEE 25-41-51-19E FOR DET	NP		001
-150B	D2549030700678		. . CABINET-SERVICE used on 001C SEE 25-41-51-19H FOR DET	NP		001
-150C	D2549030504078		. . CABINET-SERVICE used on 001D, 001F, 001J, 001L, 001R SEE 25-41-51-19E FOR DET	NP		001
-150D	D2549020400078		. . CABINET-SERVICE used on 001E SEE 25-41-51-19H FOR DET	NP		001
-150E	D2549020411278		. . CABINET-SERVICE used on 001H SEE 25-41-51-19H FOR DET	NP		001

- ITEM NOT ILLUSTRATED

FIG. ITEM	PART NUMBER	AIRLINE STOCK NUMBER	NOMENCLATURE 1234567		EFF CODE	UNITS PER ASSY
-150F	R22540114500278		. . CABINET-SERVICE POST VSB A2-254-25-080 used on 001P SEE 25-41-51-19E FOR DET	NP		001
160A	D2549010510679		. . TABLE-NURSING used on 001A, 001D, 001E, 001F, 001G, 001J, 001K, 001M, 001N, 001P, 001Q SEE 25-41-51-20A FOR DET	NP		001
-160B	D2549010512679		. . TABLE-NURSING used on 001B, 001L, 001R SEE 25-41-51-20A FOR DET	NP		001
-160C	D2549030614679		. . TABLE-NURSING used on 001C SEE 25-41-51-20B FOR DET	NP		001
-160D	D2549020411279		. . TABLE-NURSING used on 001H SEE 25-41-51-20B FOR DET	NP		001
170A	D2549020802680		. . VENTILATION SYSTEM used on 001A, 001B, 001D, 001E, 001F, 001G, 001J, 001K, 001L, 001M, 001N, 001P, 001Q, 001R SEE 25-41-51-21B FOR DET	NP		001
-170B	D2549030614680		. . VENTILATION SYSTEM used on 001C SEE 25-41-51-21B FOR DET	NP		001
-170C	D2549020411280		. . VENTILATION SYSTEM used on 001H SEE 25-41-51-21B FOR DET	NP		001

- ITEM NOT ILLUSTRATED

FIG. ITEM	PART NUMBER	AIRLINE STOCK NUMBER	NOMENCLATURE 1234567	EFF CODE	UNITS PER ASSY
180A	D2549020401281		. . WATER SYSTEM-POTABLE NP used on 001A, 001B, 001D, 001E, 001F, 001G, 001H, 001J, 001L, 001M, 001N, 001P, 001Q, 001R SEE 25-41-51-22D FOR DET		001
-180B	D2549030700681		. . WATER SYSTEM-POTABLE NP used on 001C SEE 25-41-51-22F FOR DET		001
-180C	D2549030410081		. . WATER SYSTEM-POTABLE NP used on 001K SEE 25-41-51-22G FOR DET		001
190A	D2549010511082		. . WATER SYSTEM-WASTE NP used on 001A, 001B, 001C, 001D, 001F, 001G, 001J, 001L, 001N, 001P, 001R SEE 25-41-51-23B FOR DET		001
-190B	D2549030504882		. . WATER SYSTEM-WASTE NP used on 001E, 001H, 001M, 001Q SEE 25-41-51-23B FOR DET		001
-190C	D2549030405082		. . WATER SYSTEM-WASTE NP used on 001K SEE 25-41-51-23B FOR DET		001
200A	D2549020400883		. . ELECTRICAL SYSTEM NP used on 001A, 001B SEE 25-41-51-26R FOR DET		001
-200B	D2549030700683		. . ELECTRICAL SYSTEM NP used on 001C SEE 25-41-51-26U FOR DET		001
-200C	D2549030414283		. . ELECTRICAL SYSTEM NP used on 001D, 001E, 001H, 001L, 001R SEE 25-41-51-26U FOR DET		001

- ITEM NOT ILLUSTRATED

FIG. ITEM	PART NUMBER	AIRLINE STOCK NUMBER	NOMENCLATURE 1234567		EFF CODE	UNITS PER ASSY
-200D	D2549030410283		. . ELECTRICAL SYSTEM used on 001F, 001J, 001K, 001M, 001Q SEE 25-41-51-26R FOR DET	NP		001
-200E	D2549030413083		. . ELECTRICAL SYSTEM used on 001G, 001N, 001P SEE 25-41-51-26U FOR DET	NP		001
210A	D9250000000285		. . ELECTRICAL SYSTEM-COCKPIT DOOR LOCKING used on 001A, 001C, 001D, 001E, 001H, 001K, 001L, 001R SEE 25-41-51-31B FOR DET	NP		001
-210B	D9250000000485		. . ELECTRICAL SYSTEM-COCKPIT DOOR LOCKING used on 001B, 001F SEE 25-41-51-31C FOR DET	NP		001
-210C	D9250000000585		. . ELECTRICAL SYSTEM-COCKPIT DOOR LOCKING used on 001J, 001M, 001N, 001Q SEE 25-41-51-31C FOR DET	NP		001
-210D	D9250000000685		. . ELECTRICAL SYSTEM-COCKPIT DOOR LOCKING used on 001G, 001P SEE 25-41-51-31C FOR DET	NP		001

- ITEM NOT ILLUSTRATED

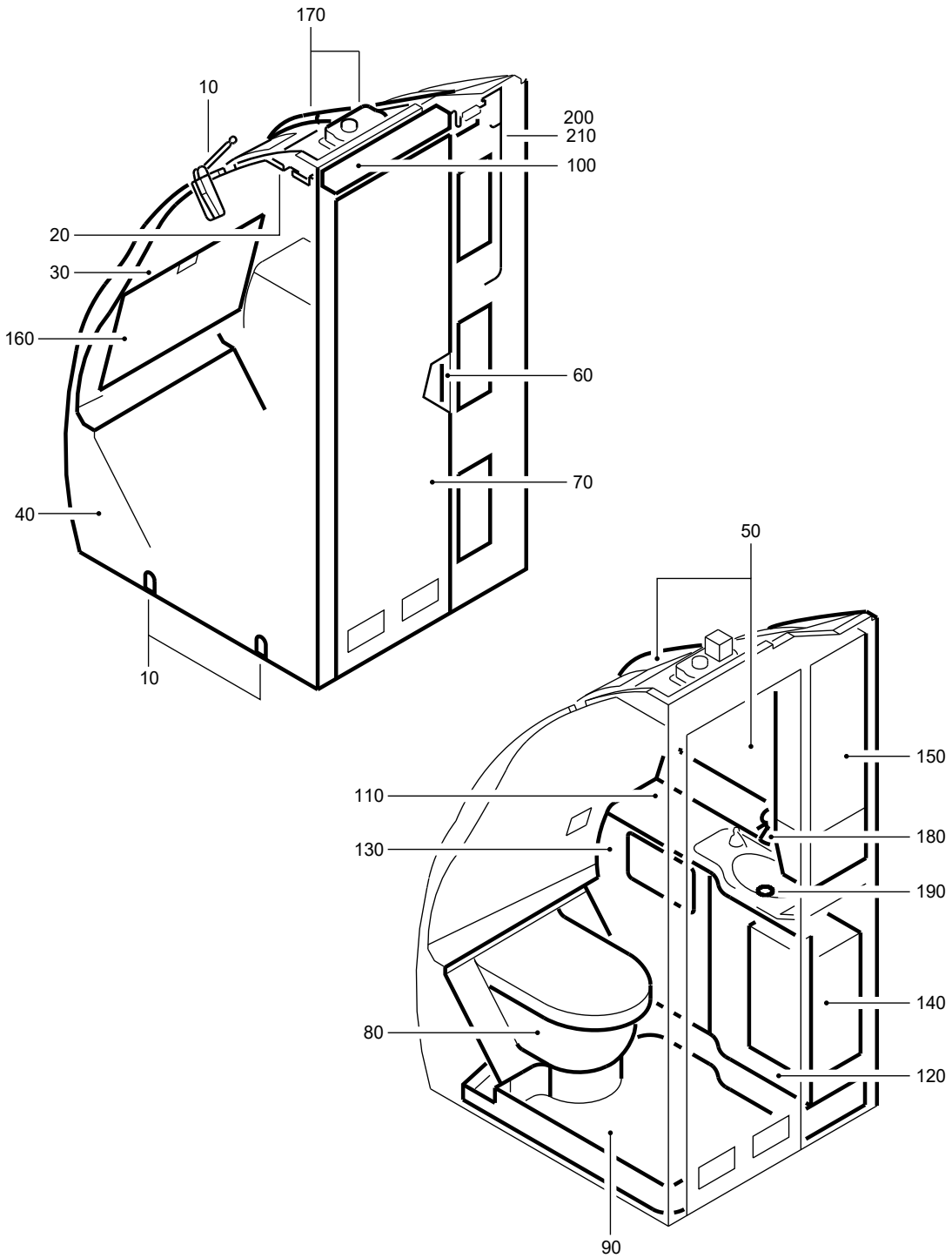

F_PL_254151_42_R_01_00

LAVATORY A ASSY
Figure 42R/EN254151SHEET42R01

FIG. ITEM	PART NUMBER	AIRLINE STOCK NUMBER	NOMENCLATURE 1234567	EFF CODE	UNITS PER ASSY
42R					
-001A	D2549020412200		. LAVATORY A ASSY SEE SIL 25-117 FOR DET		RF
-001B	D2549020411800		. LAVATORY A ASSY SEE SIL 25-117 FOR DET		RF
-001C	D2549030701600		. LAVATORY A ASSY SEE SIL 25-117 FOR DET		RF
-001D	D2549020412600		. LAVATORY A ASSY SEE SIL 25-117 FOR DET		RF
-001E	D2549020412000		. LAVATORY A ASSY SEE SIL 25-117 FOR DET		RF
-001F	D2549030701400		. LAVATORY A ASSY PRE VSB A2-254-25-045 SEE SIL 25-117 FOR DET		RF
-001G	D2549030701800		. LAVATORY A ASSY PRE VSB A2-254-25-044 SEE SIL 25-117 FOR DET		RF
-001H	D2549020413000		. LAVATORY A ASSY SEE SIL 25-117 FOR DET		RF
-001J	D2549030702400		. LAVATORY A ASSY PRE VSB A2-254-25-080 SEE SIL 25-117 FOR DET		RF
-001K	D2549020413200		. LAVATORY A ASSY SEE SIL 25-117 FOR DET		RF
-001L	D2549020412800		. LAVATORY A ASSY PRE VSB A2-254-25-047 SEE SIL 25-117 FOR DET		RF
-001M	D2549030702000		. LAVATORY A ASSY SEE SIL 25-117 FOR DET		RF

- ITEM NOT ILLUSTRATED

FIG. ITEM	PART NUMBER	AIRLINE STOCK NUMBER	NOMENCLATURE 1234567	EFF CODE	UNITS PER ASSY
-001N	R225401808-000		. LAVATORY A ASSY POST VSB A2-254-25-044 SEE SIL 25-117 FOR DET		RF
-001P	R225401691-002		. LAVATORY A ASSY POST VSB A2-254-25-080 SEE SIL 25-117 FOR DET		RF
-001Q	R225401611-020		. LAVATORY A ASSY POST VSB A2-254-25-045 SEE SIL 25-117 FOR DET		RF
-001R	R225401811-000		. LAVATORY A ASSY POST VSB A2-254-25-047		RF
010A	D2549030414061		. . ATTACHMENT-LAVATORY NP used on 001A, 001B, 001G, 001N SEE 25-41-51-02B FOR DET		001
-010B	D2549030410861		. . ATTACHMENT-LAVATORY NP used on 001C SEE 25-41-51-02D FOR DET		001
-010C	D2549010613661		. . ATTACHMENT-LAVATORY NP used on 001D, 001E, 001F, 001K, 001L, 001Q, 001R SEE 25-41-51-02D FOR DET		001
-010D	D2549040500861		. . ATTACHMENT-LAVATORY NP used on 001H, 001J, 001P SEE 25-41-51-02B FOR DET		001
-010E	D2549030702061		. . ATTACHMENT-LAVATORY NP used on 001M SEE 25-41-51-02D FOR DET		001
020A	D2549030409663		. . PANEL-CEILING NP used on 001A, 001G, 001N SEE 25-41-51-04A FOR DET		001

- ITEM NOT ILLUSTRATED

FIG. ITEM	PART NUMBER	AIRLINE STOCK NUMBER	NOMENCLATURE 1234567		EFF CODE	UNITS PER ASSY
-020B	D2549030410263		. . PANEL-CEILING used on 001B SEE 25-41-51-04A FOR DET	NP		001
-020C	D2549040500663		. . PANEL-CEILING used on 001C, 001E, 001F, 001J, 001K, 001P, 001Q SEE 25-41-51-04A FOR DET	NP		001
-020D	D2549030401463		. . PANEL-CEILING used on 001D, 001H, 001L, 001R SEE 25-41-51-040 FOR DET	NP		001
-020E	D2549030702063		. . PANEL-CEILING used on 001M SEE 25-41-51-04A FOR DET	NP		001
030A	D2549030410264		. . WALL-REAR used on 001A, 001B SEE 25-41-51-05F FOR DET	NP		001
-030B	D2549020805264		. . WALL-REAR used on 001C SEE 25-41-51-05H FOR DET	NP		001
-030C	D2549010400864		. . WALL-REAR used on 001D, 001E, 001F, 001K, 001Q SEE 25-41-51-05J FOR DET	NP		001
-030D	D2549010613264		. . WALL-REAR used on 001G, 001N SEE 25-41-51-05H FOR DET	NP		001
-030E	D2549020805464		. . WALL-REAR used on 001H SEE 25-41-51-05H FOR DET	NP		001
-030F	D2549020812264		. . WALL-REAR used on 001J, 001P SEE 25-41-51-05H FOR DET	NP		001

- ITEM NOT ILLUSTRATED

FIG. ITEM	PART NUMBER	AIRLINE STOCK NUMBER	NOMENCLATURE 1234567		EFF CODE	UNITS PER ASSY
-030G	D2549030406464		. . WALL-REAR used on 001L, 001R SEE 25-41-51-05F FOR DET	NP		001
-030H	D2549030702064		. . WALL-REAR used on 001M SEE 25-41-51-05F FOR DET	NP		001
040A	D2549020412265		. . WALL-SIDE used on 001A SEE 25-41-51-48A FOR DET	NP		001
-040B	D2549020411865		. . WALL-SIDE used on 001B SEE 25-41-51-48L FOR DET	NP		001
-040C	D2549030410865		. . WALL-SIDE used on 001C SEE 25-41-51-48A FOR DET	NP		001
-040D	D2549020408665		. . WALL-SIDE used on 001D SEE 25-41-51-48H FOR DET	NP		001
-040E	D2549020412065		. . WALL-SIDE used on 001E SEE 25-41-51-48A FOR DET	NP		001
-040F	D2549040500465		. . WALL-SIDE PRE VSB A2-254-25-045 used on 001F SEE 25-41-51-48A FOR DET	NP		001
-040G	D2549030701865		. . WALL-SIDE PRE VSB A2-254-25-044 used on 001G SEE 25-41-51-48A FOR DET	NP		001
-040H	D2549020413065		. . WALL-SIDE used on 001H SEE 25-41-51-48L FOR DET	NP		001

- ITEM NOT ILLUSTRATED

FIG. ITEM	PART NUMBER	AIRLINE STOCK NUMBER	NOMENCLATURE 1234567		EFF CODE	UNITS PER ASSY
-040J	D2549030413065		. . WALL-SIDE PRE VSB A2-254-25-080 used on 001J SEE 25-41-51-48K FOR DET	NP		001
-040K	D2549020413265		. . WALL-SIDE used on 001K SEE 25-41-51-48M FOR DET	NP		001
-040L	D2549020412865		. . WALL-SIDE used on 001L, 001R SEE 25-41-51-48F FOR DET	NP		001
-040M	D2549030702065		. . WALL-SIDE used on 001M SEE 25-41-51-48M FOR DET	NP		001
-040N	R22540180800065		. . WALL-SIDE POST VSB A2-254-25-044 used on 001N SEE 25-41-51-48A FOR DET	NP		001
-040P	R22540169100065		. . WALL-SIDE POST VSB A2-254-25-080 used on 001P SEE 25-41-51-48K FOR DET	NP		001
-040Q	R22540161102065		. . WALL-SIDE POST VSB A2-254-25-045 used on 001Q SEE 25-41-51-48A FOR DET	NP		001
050A	D2549020412266		. . HOUSING used on 001A SEE 25-41-51-49A FOR DET	NP		001
-050B	D2549020411866		. . HOUSING used on 001B SEE 25-41-51-49A FOR DET	NP		001

- ITEM NOT ILLUSTRATED

FIG. ITEM	PART NUMBER	AIRLINE STOCK NUMBER	NOMENCLATURE 1234567	EFF CODE	UNITS PER ASSY
-050C	D2549030701666		. . HOUSING NP used on 001C SEE 25-41-51-49A FOR DET		001
-050D	D2549020404066		. . HOUSING NP used on 001D SEE 25-41-51-07W FOR DET		001
-050E	D2549020412066		. . HOUSING NP used on 001E SEE 25-41-51-49A FOR DET		001
-050F	D2549040500466		. . HOUSING NP used on 001F, 001Q SEE 25-41-51-07X FOR DET		001
-050G	D2549030701866		. . HOUSING NP used on 001G, 001N SEE 25-41-51-49A FOR DET		001
-050H	D2549020402066		. . HOUSING NP used on 001H SEE 25-41-51-07Z FOR DET		001
-050J	D2549010401666		. . HOUSING NP used on 001J, 001P SEE 25-41-51-49A FOR DET		001
-050K	D2549020413266		. . HOUSING NP used on 001K SEE 25-41-51-49A FOR DET		001
-050L	D2549010403266		. . HOUSING NP used on 001L, 001R SEE 25-41-51-07Z FOR DET		001
-050M	D2549030702066		. . HOUSING NP used on 001M SEE 25-41-51-49A FOR DET		001

- ITEM NOT ILLUSTRATED

FIG. ITEM	PART NUMBER	AIRLINE STOCK NUMBER	NOMENCLATURE 1234567	EFF CODE	UNITS PER ASSY
060A	D2549020401269		. . DOOR INSTL NP used on 001A, 001B, 001C, 001D, 001E, 001F, 001G, 001H, 001J, 001K, 001L, 001M, 001N, 001P, 001Q, 001R SEE 25-41-51-10A FOR DET		001
070A	A225400278-848		. . DOOR ASSY-SINGLE used on 001A, 001B SEE 25-41-51-11P FOR DET		001
-070B	A225400278-518		. . DOOR ASSY-SINGLE used on 001C SEE 25-41-51-11K FOR DET		001
-070C	A225400278-514		. . DOOR ASSY-SINGLE used on 001D SEE 25-41-51-11H FOR DET		001
-070D	A225400276-948		. . DOOR ASSY-SINGLE used on 001E, 001K SEE 25-41-51-11G FOR DET		001
-070E	A225400276-960		. . DOOR ASSY-SINGLE used on 001F, 001Q SEE 25-41-51-11J FOR DET		001
-070F	A225400278-850		. . DOOR ASSY-SINGLE used on 001G, 001N SEE 25-41-51-11P FOR DET		001
-070G	A225400276-944		. . DOOR ASSY-SINGLE used on 001H SEE 25-41-51-11F FOR DET		001
-070H	A225400276-934		. . DOOR ASSY-SINGLE used on 001J, 001P SEE 25-41-51-11F FOR DET		001

- ITEM NOT ILLUSTRATED

FIG. ITEM	PART NUMBER	AIRLINE STOCK NUMBER	NOMENCLATURE 1234567		EFF CODE	UNITS PER ASSY
-070J	A225400276-924		. . DOOR ASSY-SINGLE used on 001L, 001R SEE 25-41-51-11E FOR DET			001
-070K	A225400278-542		. . DOOR ASSY-SINGLE used on 001M SEE 25-41-51-11P FOR DET			001
080A	D2549020811871		. . TOILET UNIT AND TOILET SHROUD used on 001A, 001B, 001D, 001F, 001H, 001J, 001P, 001Q SEE 25-41-51-12G FOR DET	NP		001
-080B	D2549030410671		. . TOILET UNIT AND TOILET SHROUD used on 001C SEE 25-41-51-12G FOR DET	NP		001
-080C	D2549020403271		. . TOILET UNIT AND TOILET SHROUD used on 001E, 001K SEE 25-41-51-12G FOR DET	NP		001
-080D	D2549030701871		. . TOILET UNIT AND TOILET SHROUD used on 001G, 001N SEE 25-41-51-12H FOR DET	NP		001
-080E	D2549010610671		. . TOILET UNIT AND TOILET SHROUD used on 001L, 001R SEE 25-41-51-12G FOR DET	NP		001
-080F	D2549030702071		. . TOILET UNIT AND TOILET SHROUD used on 001M SEE 25-41-51-12H FOR DET	NP		001

- ITEM NOT ILLUSTRATED

FIG. ITEM	PART NUMBER	AIRLINE STOCK NUMBER	NOMENCLATURE 1234567	EFF CODE	UNITS PER ASSY
090A	D2549020410872		. . PAN-FLOOR NP used on 001A, 001B, 001E, 001H, 001K SEE 25-41-51-13S FOR DET		001
-090B	D2549030410872		. . PAN-FLOOR NP used on 001C SEE 25-41-51-13Q FOR DET		001
-090C	D2549020400672		. . PAN-FLOOR NP used on 001D SEE 25-41-51-13N FOR DET		001
-090D	D2549030700472		. . PAN-FLOOR NP used on 001F, 001Q SEE 25-41-51-13S FOR DET		001
-090E	D2549020402072		. . PAN-FLOOR NP used on 001G, 001N SEE 25-41-51-13S FOR DET		001
-090F	D2549030413072		. . PAN-FLOOR NP used on 001J, 001P SEE 25-41-51-13Q FOR DET		001
-090G	D2549010404672		. . PAN-FLOOR NP used on 001L, 001R SEE 25-41-51-13S FOR DET		001
-090H	D2549030702072		. . PAN-FLOOR NP used on 001M SEE 25-41-51-13S FOR DET		001
100A	D2549030414673		. . LIGHT-DOOR NP used on 001A, 001G, 001N SEE 25-41-51-14A FOR DET		001
-100B	D2549020612273		. . LIGHT-DOOR NP used on 001B SEE 25-41-51-14A FOR DET		001

- ITEM NOT ILLUSTRATED

FIG. ITEM	PART NUMBER	AIRLINE STOCK NUMBER	NOMENCLATURE 1234567		EFF CODE	UNITS PER ASSY
-100C	D2549030414273		. . LIGHT-DOOR used on 001C SEE 25-41-51-14A FOR DET	NP		001
-100D	D2549010512673		. . LIGHT-DOOR used on 001D, 001H, 001L, 001R SEE 25-41-51-140 FOR DET	NP		001
-100E	D2549040501673		. . LIGHT-DOOR used on 001E, 001F, 001J, 001K, 001P, 001Q SEE 25-41-51-14A FOR DET	NP		001
-100F	D2549030702073		. . LIGHT-DOOR used on 001M SEE 25-41-51-14A FOR DET	NP		001
110A	D2549030410074		. . WASHBASIN UNIT used on 001A, 001B, 001C, 001E, 001H SEE 25-41-51-15L FOR DET	NP		001
-110B	D2549020402674		. . WASHBASIN UNIT used on 001F, 001Q SEE 25-41-51-15L FOR DET	NP		001
-110C	D2549020701874		. . WASHBASIN UNIT used on 001G, 001N SEE 25-41-51-15R FOR DET	NP		001
-110D	D2549040500674		. . WASHBASIN UNIT used on 001J, 001P SEE 25-41-51-15L FOR DET	NP		001
-110E	D2549020412874		. . WASHBASIN UNIT used on 001L, 001R SEE 25-41-51-15Q FOR DET	NP		001
-110F	D2549030702074		. . WASHBASIN UNIT used on 001M SEE 25-41-51-15Q FOR DET	NP		001

- ITEM NOT ILLUSTRATED

FIG. ITEM	PART NUMBER	AIRLINE STOCK NUMBER	NOMENCLATURE 1234567		EFF CODE	UNITS PER ASSY
-110G	D2549020412674		. . WASHBASIN UNIT used on 001D, 001K SEE 25-41-51-15Q FOR DET	NP		001
120A	D2549020607075		. . DOOR ASSY-WASHBASIN UNIT used on 001A, 001B, 001H SEE 25-41-51-16B FOR DET	NP		001
-120B	D2549020510675		. . DOOR ASSY-WASHBASIN UNIT used on 001C SEE 25-41-51-16D FOR DET	NP		001
-120C	D2549030606075		. . DOOR ASSY-WASHBASIN UNIT used on 001D, 001F, 001J, 001P, 001Q SEE 25-41-51-16E FOR DET	NP		001
-120D	D2549020605475		. . DOOR ASSY-WASHBASIN UNIT used on 001E, 001K SEE 25-41-51-16C FOR DET	NP		001
-120E	D2549030701875		. . DOOR ASSY-WASHBASIN UNIT used on 001G, 001N SEE 25-41-51-16B FOR DET	NP		001
-120F	D2549010510475		. . DOOR ASSY-WASHBASIN UNIT used on 001L, 001R SEE 25-41-51-16B FOR DET	NP		001
-120G	D2549030702075		. . DOOR ASSY-WASHBASIN UNIT used on 001M SEE 25-41-51-16D FOR DET	NP		001

- ITEM NOT ILLUSTRATED

FIG. ITEM	PART NUMBER	AIRLINE STOCK NUMBER	NOMENCLATURE 1234567	EFF CODE	UNITS PER ASSY
130A	D2549030511076		. . PANEL ASSY-WASHBASIN UNIT NP used on 001A SEE 25-41-51-17D FOR DET		001
-130B	D2549030504876		. . PANEL ASSY-WASHBASIN UNIT NP used on 001B, 001D, 001F, 001H, 001J, 001P, 001Q SEE 25-41-51-17C FOR DET		001
-130C	D2549020710076		. . PANEL ASSY-WASHBASIN UNIT NP used on 001C SEE 25-41-51-17D FOR DET		001
-130D	D2549020605476		. . PANEL ASSY-WASHBASIN UNIT NP used on 001E, 001K SEE 25-41-51-17D FOR DET		001
-130E	D2549030701876		. . PANEL ASSY-WASHBASIN UNIT NP used on 001G, 001N SEE 25-41-51-17E FOR DET		001
-130F	D2549010604876		. . PANEL ASSY-WASHBASIN UNIT NP used on 001L, 001R SEE 25-41-51-17D FOR DET		001
-130G	D2549030702076		. . PANEL ASSY-WASHBASIN UNIT NP used on 001M SEE 25-41-51-17E FOR DET		001

- ITEM NOT ILLUSTRATED

FIG. ITEM	PART NUMBER	AIRLINE STOCK NUMBER	NOMENCLATURE 1234567		EFF CODE	UNITS PER ASSY
140A	D2549010611677		. . BIN-WASTE,CHUTE-WASTE AND EXTINGUISHER-FIRE used on 001A, 001B, 001C, 001D, 001E, 001F, 001G, 001H, 001J, 001K, 001L, 001M, 001N, 001P, 001Q, 001R SEE 25-41-51-180 FOR DET	NP		001
150A	D2549020708078		. . CABINET-SERVICE PRE VSB A2-254-25-044 used on 001A, 001B, 001G SEE 25-41-51-19F FOR DET	NP		001
-150B	D2549020510678		. . CABINET-SERVICE used on 001C SEE 25-41-51-19F FOR DET	NP		001
-150C	D2549030504078		. . CABINET-SERVICE used on 001D, 001L, 001R SEE 25-41-51-19E FOR DET	NP		001
-150D	D2549030504878		. . CABINET-SERVICE PRE VSB A2-254-25-045 PRE VSB A2-254-25-080 used on 001E, 001F, 001H, 001J, 001K SEE 25-41-51-19E FOR DET	NP		001
-150E	D2549030702078		. . CABINET-SERVICE used on 001M SEE 25-41-51-19H FOR DET	NP		001
-150F	R22540180800078		. . CABINET-SERVICE POST VSB A2-254-25-044 used on 001N SEE 25-41-51-19F FOR DET	NP		001
-150G	R22540114500278		. . CABINET-SERVICE POST VSB A2-254-25-080 used on 001P SEE 25-41-51-19E FOR DET	NP		001

- ITEM NOT ILLUSTRATED

FIG. ITEM	PART NUMBER	AIRLINE STOCK NUMBER	NOMENCLATURE 1234567	EFF CODE	UNITS PER ASSY
-150H	R22540119900278		. . CABINET-SERVICE NP POST VSB A2-254-25-045 used on 001Q SEE 25-41-51-19E FOR DET		001
160A	D2549030614679		. . TABLE-NURSING NP used on 001A, 001B, 001G, 001N SEE 25-41-51-20B FOR DET		001
-160B	D2549020510679		. . TABLE-NURSING NP used on 001C SEE 25-41-51-20B FOR DET		001
-160C	D2549010510679		. . TABLE-NURSING NP used on 001D, 001E, 001F, 001H, 001J, 001K, 001L, 001P, 001Q, 001R SEE 25-41-51-20A FOR DET		001
-160D	D2549030702079		. . TABLE-NURSING NP used on 001M SEE 25-41-51-20B FOR DET		001
170A	D2549030614680		. . VENTILATION SYSTEM NP used on 001A, 001B, 001G, 001N SEE 25-41-51-21B FOR DET		001
-170B	D2549020510680		. . VENTILATION SYSTEM NP used on 001C SEE 25-41-51-21B FOR DET		001
-170C	D2549020802680		. . VENTILATION SYSTEM NP used on 001D, 001E, 001F, 001H, 001J, 001K, 001L, 001P, 001Q, 001R SEE 25-41-51-21B FOR DET		001
-170D	D2549030702080		. . VENTILATION SYSTEM NP used on 001M SEE 25-41-51-21B FOR DET		001

- ITEM NOT ILLUSTRATED

FIG. ITEM	PART NUMBER	AIRLINE STOCK NUMBER	NOMENCLATURE 1234567		EFF CODE	UNITS PER ASSY
180A	D2549020401281		. . WATER SYSTEM-POTABLE used on 001A, 001B, 001C, 001D, 001E, 001F, 001G, 001H, 001K, 001N, 001Q SEE 25-41-51-22D FOR DET	NP		001
-180B	D2549030410081		. . WATER SYSTEM-POTABLE used on 001J, 001M, 001P SEE 25-41-51-22G FOR DET	NP		001
-180C	D2549010606481		. . WATER SYSTEM-POTABLE used on 001L, 001R SEE 25-41-51-22F FOR DET	NP		001
190A	D2549020800882		. . WATER SYSTEM-WASTE used on 001A, 001B, 001C, 001D, 001E, 001F, 001G, 001H, 001K, 001N, 001Q SEE 25-41-51-23D FOR DET	NP		001
-190B	D2549030405082		. . WATER SYSTEM-WASTE used on 001J, 001P SEE 25-41-51-23B FOR DET	NP		001
-190C	D2549010511082		. . WATER SYSTEM-WASTE used on 001L, 001R SEE 25-41-51-23B FOR DET	NP		001
-190D	D2549030614682		. . WATER SYSTEM-WASTE used on 001M SEE 25-41-51-23D FOR DET	NP		001
200A	D2549030414283		. . ELECTRICAL SYSTEM used on 001A, 001C, 001E, 001F, 001G, 001K, 001M, 001N, 001Q SEE 25-41-51-26U FOR DET	NP		001
-200B	D2549020400883		. . ELECTRICAL SYSTEM used on 001B SEE 25-41-51-26R FOR DET	NP		001

- ITEM NOT ILLUSTRATED

FIG. ITEM	PART NUMBER	AIRLINE STOCK NUMBER	NOMENCLATURE 1234567		EFF CODE	UNITS PER ASSY
-200C	D2549030410283		. . ELECTRICAL SYSTEM used on 001D, 001H SEE 25-41-51-26R FOR DET	NP		001
-200D	D2549030413083		. . ELECTRICAL SYSTEM used on 001J, 001P SEE 25-41-51-26U FOR DET	NP		001
-200E	D2549010610683		. . ELECTRICAL SYSTEM used on 001L, 001R SEE 25-41-51-26R FOR DET	NP		001
210A	D9250000000285		. . ELECTRICAL SYSTEM- COCKPIT DOOR LOCKING used on 001A, 001B, 001D, 001E, 001F, 001G, 001H, 001L, 001M, 001N, 001Q, 001R SEE 25-41-51-31B FOR DET	NP		001
-210B	D9250000000585		. . ELECTRICAL SYSTEM- COCKPIT DOOR LOCKING used on 001C, 001K SEE 25-41-51-31C FOR DET	NP		001
-210C	D9250000000685		. . ELECTRICAL SYSTEM- COCKPIT DOOR LOCKING used on 001J, 001P SEE 25-41-51-31C FOR DET	NP		001

- ITEM NOT ILLUSTRATED

THIS PAGE IS INTENTIONALLY LEFT BLANK

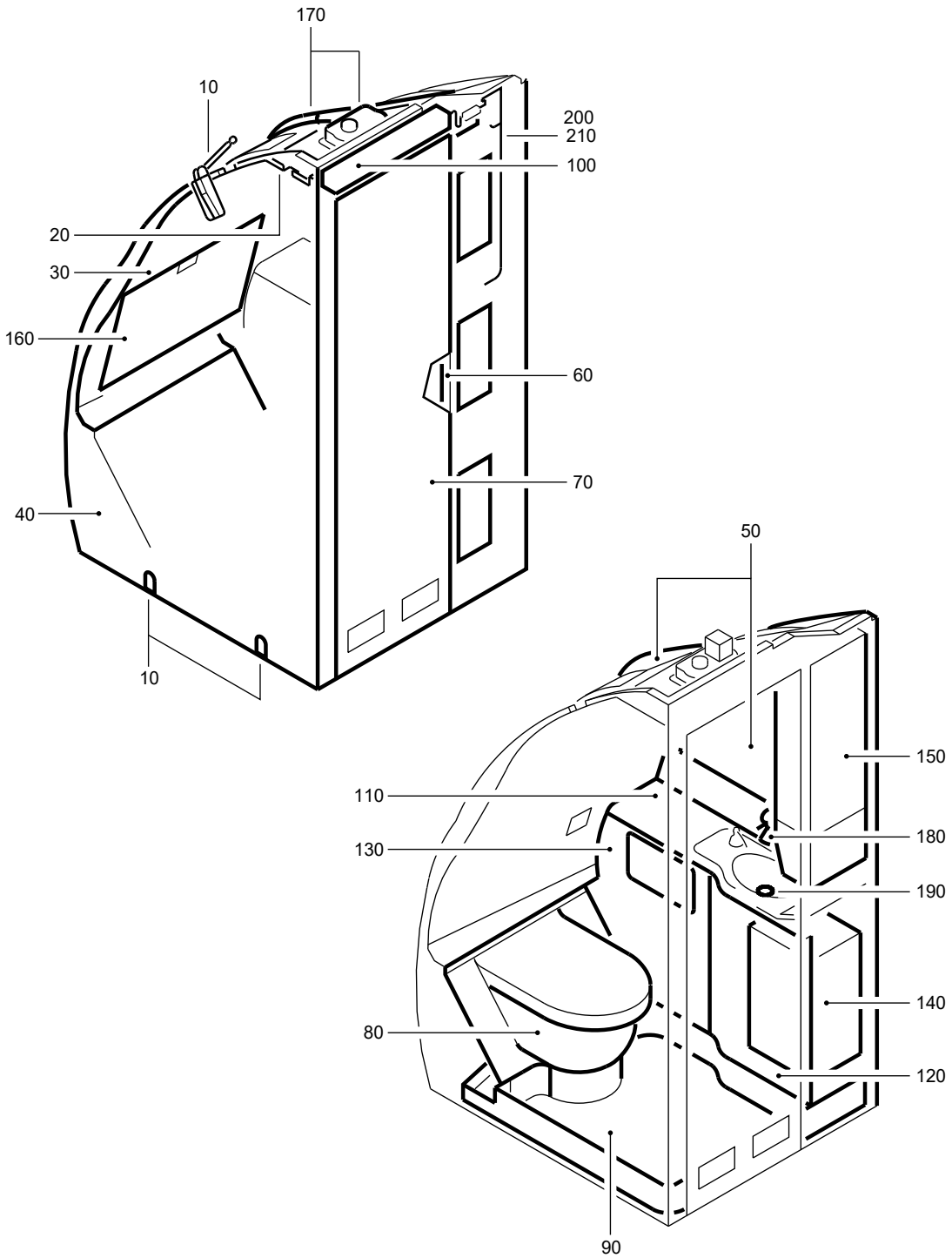

F_PL_254151_42_S_01_00

LAVATORY A ASSY
Figure 42S/EN254151SHEET42S01

FIG. ITEM	PART NUMBER	AIRLINE STOCK NUMBER	NOMENCLATURE 1234567	EFF CODE	UNITS PER ASSY
42S					
-001A	D2549010405800		. LAVATORY A ASSY SEE SIL 25-117 FOR DET		RF
-001B	D2549020412400		. LAVATORY A ASSY SEE SIL 25-117 FOR DET		RF
-001C	D2549030703400		. LAVATORY A ASSY SEE SIL 25-117 FOR DET		RF
-001D	D2549020302000		. LAVATORY A ASSY PRE VSB A2-254-25-054 SEE SIL 25-117 FOR DET		RF
-001E	D2549020414800		. LAVATORY A ASSY SEE SIL 25-117 FOR DET		RF
-001F	D2549020300600		. LAVATORY A ASSY SEE SIL 25-117 FOR DET		RF
-001G	D2549030704800		. LAVATORY A ASSY PRE VSB A2-254-25-052 SEE SIL 25-117 FOR DET		RF
-001H	D2549030705600		. LAVATORY A ASSY SEE SIL 25-117 FOR DET		RF
-001J	D2549030704200		. LAVATORY A ASSY SEE SIL 25-117 FOR DET		RF
-001K	D2549020301000		. LAVATORY A ASSY SEE SIL 25-117 FOR DET		RF
-001L	D2549020414000		. LAVATORY A ASSY SEE SIL 25-117 FOR DET		RF
-001M	D2549010405600		. LAVATORY A ASSY PRE VSB A2-254-25-044 SEE SIL 25-117 FOR DET		RF

- ITEM NOT ILLUSTRATED

FIG. ITEM	PART NUMBER	AIRLINE STOCK NUMBER	NOMENCLATURE 1234567		EFF CODE	UNITS PER ASSY
-001N	D2549020414000		. LAVATORY A ASSY SEE SIL 25-117 FOR DET			RF
-001P	R225401814-000		. LAVATORY A ASSY POST VSB A2-254-25-044 SEE SIL 25-117 FOR DET			RF
-001Q	R225401627-002		. LAVATORY A ASSY POST VSB A2-254-25-054 SEE SIL 25-117 FOR DET			RF
-001R	R225401671-002		. LAVATORY A ASSY POST VSB A2-254-25-052 SEE SIL 25-117 FOR DET			RF
010A	D2549010613661		. . ATTACHMENT-LAVATORY used on 001A, 001B, 001C, 001F SEE 25-41-51-02D FOR DET	NP		001
-010B	D2549040500861		. . ATTACHMENT-LAVATORY used on 001D, 001K, 001L, 001N, 001Q SEE 25-41-51-02B FOR DET	NP		001
-010C	D2549030414061		. . ATTACHMENT-LAVATORY used on 001E, 001G, 001M, 001P, 001R SEE 25-41-51-02B FOR DET	NP		001
-010D	D2549030414661		. . ATTACHMENT-LAVATORY used on 001H SEE 25-41-51-02D FOR DET	NP		001
-010E	D2549030413461		. . ATTACHMENT-LAVATORY used on 001J SEE 25-41-51-02D FOR DET	NP		001
020A	D2549030401463		. . PANEL-CEILING used on 001A, 001C, 001D, 001F, 001K, 001Q SEE 25-41-51-040 FOR DET	NP		001

- ITEM NOT ILLUSTRATED

FIG. ITEM	PART NUMBER	AIRLINE STOCK NUMBER	NOMENCLATURE 1234567		EFF CODE	UNITS PER ASSY
-020B	D2549030409663		. . PANEL-CEILING used on 001E, 001G, 001H, 001M, 001P, 001R SEE 25-41-51-04A FOR DET	NP		001
-020C	D2549040500663		. . PANEL-CEILING used on 001B, 001L, 001N SEE 25-41-51-04A FOR DET	NP		001
-020D	D2549030408263		. . PANEL-CEILING used on 001J SEE 25-41-51-04A FOR DET	NP		001
030A	D2549020805464		. . WALL-REAR used on 001A, 001F SEE 25-41-51-05H FOR DET	NP		001
-030B	D2549010400864		. . WALL-REAR used on 001B, 001C, 001K, 001L, 001N SEE 25-41-51-05J FOR DET	NP		001
-030C	D2549030406464		. . WALL-REAR used on 001D, 001Q SEE 25-41-51-05F FOR DET	NP		001
-030D	D2549010613264		. . WALL-REAR used on 001E, 001G, 001M, 001P, 001R SEE 25-41-51-05H FOR DET	NP		001
-030E	D2549030414664		. . WALL-REAR used on 001H SEE 25-41-51-05F FOR DET	NP		001
-030F	D2549030408264		. . WALL-REAR used on 001J SEE 25-41-51-05J FOR DET	NP		001

- ITEM NOT ILLUSTRATED

FIG. ITEM	PART NUMBER	AIRLINE STOCK NUMBER	NOMENCLATURE 1234567	EFF CODE	UNITS PER ASSY
040A	D2549010405065		. . WALL-SIDE NP used on 001A SEE 25-41-51-48L FOR DET		001
-040B	D2549020412465		. . WALL-SIDE NP used on 001B SEE 25-41-51-48M FOR DET		001
-040C	D2549020406665		. . WALL-SIDE NP used on 001C SEE 25-41-51-48H FOR DET		001
-040D	D2549020401465		. . WALL-SIDE NP PRE VSB A2-254-25-054 used on 001D SEE 25-41-51-48H FOR DET		001
-040E	D2549020414865		. . WALL-SIDE NP used on 001E SEE 25-41-51-48M FOR DET		001
-040F	D2549020409865		. . WALL-SIDE NP used on 001F SEE 25-41-51-48K FOR DET		001
-040G	D2549030409665		. . WALL-SIDE NP PRE VSB A2-254-25-052 used on 001G SEE 25-41-51-48G FOR DET		001
-040H	D2549030414665		. . WALL-SIDE NP used on 001H SEE 25-41-51-48L FOR DET		001
-040J	D2549030412265		. . WALL-SIDE NP used on 001J SEE 25-41-51-48H FOR DET		001
-040K	D2549020413065		. . WALL-SIDE NP used on 001K SEE 25-41-51-48L FOR DET		001

- ITEM NOT ILLUSTRATED

FIG. ITEM	PART NUMBER	AIRLINE STOCK NUMBER	NOMENCLATURE 1234567		EFF CODE	UNITS PER ASSY
-040L	D2549020414065		. . WALL-SIDE used on 001L, 001N SEE 25-41-51-48M FOR DET	NP		001
-040M	D2549030701865		. . WALL-SIDE PRE VSB A2-254-25-044 used on 001M SEE 25-41-51-48A FOR DET	NP		001
-040N	R22540180800065		. . WALL-SIDE POST VSB A2-254-25-044 used on 001P SEE 25-41-51-48A FOR DET	NP		001
-040P	R22540162700065		. . WALL-SIDE POST VSB A2-254-25-054 used on 001Q SEE 25-41-51-48H FOR DET	NP		001
-040Q	R22540167100065		. . WALL-SIDE POST VSB A2-254-25-052 used on 001R SEE 25-41-51-48G FOR DET	NP		001
050A	D2549010405866		. . HOUSING used on 001A SEE 25-41-51-490 FOR DET	NP		001
-050B	D2549020412066		. . HOUSING used on 001B SEE 25-41-51-49A FOR DET	NP		001
-050C	D2549030701066		. . HOUSING used on 001C SEE 25-41-51-49A FOR DET	NP		001
-050D	D2549020401466		. . HOUSING used on 001D, 001Q SEE 25-41-51-07Z FOR DET	NP		001

- ITEM NOT ILLUSTRATED

FIG. ITEM	PART NUMBER	AIRLINE STOCK NUMBER	NOMENCLATURE 1234567		EFF CODE	UNITS PER ASSY
-050E	D2549030409666		. . HOUSING used on 001E, 001G, 001R SEE 25-41-51-07W FOR DET	NP		001
-050F	D2549020400666		. . HOUSING used on 001F SEE 25-41-51-07W FOR DET	NP		001
-050G	D2549030414666		. . HOUSING used on 001H SEE 25-41-51-490 FOR DET	NP		001
-050H	D2549030412266		. . HOUSING used on 001J SEE 25-41-51-07Z FOR DET	NP		001
-050J	D2549020402066		. . HOUSING used on 001K SEE 25-41-51-07Z FOR DET	NP		001
-050K	D2549020414066		. . HOUSING used on 001L SEE 25-41-51-49B FOR DET	NP		001
-050L	D2549030701866		. . HOUSING used on 001M, 001P SEE 25-41-51-49A FOR DET	NP		001
-050M	D2549020414166		. . HOUSING used on 001N SEE 25-41-51-49B FOR DET	NP		001
060A	D2549020401269		. . DOOR INSTL used on 001A, 001B, 001C, 001D, 001E, 001F, 001G, 001H, 001J, 001K, 001L, 001M, 001N, 001P, 001Q, 001R SEE 25-41-51-10A FOR DET	NP		001

- ITEM NOT ILLUSTRATED

FIG. ITEM	PART NUMBER	AIRLINE STOCK NUMBER	NOMENCLATURE 1234567	EFF CODE	UNITS PER ASSY
070A	A225400276-928		. . DOOR ASSY-SINGLE used on 001A SEE 25-41-51-11F FOR DET		001
-070B	A225400276-948		. . DOOR ASSY-SINGLE used on 001B SEE 25-41-51-11G FOR DET		001
-070C	A225400276-946		. . DOOR ASSY-SINGLE used on 001C SEE 25-41-51-11G FOR DET		001
-070D	A225400278-824		. . DOOR ASSY-SINGLE used on 001D, 001Q SEE 25-41-51-11H FOR DET		001
-070E	A225400278-536		. . DOOR ASSY-SINGLE used on 001E, 001G, 001R SEE 25-41-51-11M FOR DET		001
-070F	A225400278-514		. . DOOR ASSY-SINGLE used on 001F SEE 25-41-51-11H FOR DET		001
-070G	A225400276-970		. . DOOR ASSY-SINGLE used on 001H SEE 25-41-51-11L FOR DET		001
-070H	A225400278-828		. . DOOR ASSY-SINGLE used on 001J SEE 25-41-51-11M FOR DET		001
-070J	A225400276-944		. . DOOR ASSY-SINGLE used on 001K SEE 25-41-51-11F FOR DET		001
-070K	A225400276-584		. . DOOR ASSY-SINGLE used on 001L, 001N SEE 25-41-51-11F FOR DET		001

- ITEM NOT ILLUSTRATED

FIG. ITEM	PART NUMBER	AIRLINE STOCK NUMBER	NOMENCLATURE 1234567		EFF CODE	UNITS PER ASSY
-070L	A225400278-850		. . DOOR ASSY-SINGLE used on 001M, 001P SEE 25-41-51-11P FOR DET			001
080A	D2549020400871		. . TOILET UNIT AND TOILET SHROUD used on 001A SEE 25-41-51-12G FOR DET	NP		001
-080B	D2549020403271		. . TOILET UNIT AND TOILET SHROUD used on 001B SEE 25-41-51-12G FOR DET	NP		001
-080C	D2549020811871		. . TOILET UNIT AND TOILET SHROUD used on 001C, 001D, 001E, 001F, 001G, 001K, 001L, 001N, 001Q, 001R SEE 25-41-51-12G FOR DET	NP		001
-080D	D2549030414671		. . TOILET UNIT AND TOILET SHROUD used on 001H SEE 25-41-51-12J FOR DET	NP		001
-080E	D2549030412271		. . TOILET UNIT AND TOILET SHROUD used on 001J SEE 25-41-51-12H FOR DET	NP		001
-080F	D2549030701871		. . TOILET UNIT AND TOILET SHROUD used on 001M, 001P SEE 25-41-51-12H FOR DET	NP		001
090A	D2549020401672		. . PAN-FLOOR used on 001A SEE 25-41-51-13P FOR DET	NP		001

- ITEM NOT ILLUSTRATED

FIG. ITEM	PART NUMBER	AIRLINE STOCK NUMBER	NOMENCLATURE 1234567	EFF CODE	UNITS PER ASSY
-090B	D2549020410872		. . PAN-FLOOR NP used on 001B, 001E, 001K, 001L, 001N SEE 25-41-51-13S FOR DET		001
-090C	D2549030410072		. . PAN-FLOOR NP used on 001C SEE 25-41-51-13N FOR DET		001
-090D	D2549020400672		. . PAN-FLOOR NP used on 001D, 001Q SEE 25-41-51-13N FOR DET		001
-090E	D2549020409872		. . PAN-FLOOR NP used on 001F SEE 25-41-51-13Q FOR DET		001
-090F	D2549030409672		. . PAN-FLOOR NP used on 001G, 001H, 001R SEE 25-41-51-13N FOR DET		001
-090G	D2549030410272		. . PAN-FLOOR NP used on 001J SEE 25-41-51-13N FOR DET		001
-090H	D2549020402072		. . PAN-FLOOR NP used on 001M, 001P SEE 25-41-51-13S FOR DET		001
100A	D2549010512673		. . LIGHT-DOOR NP used on 001A, 001C, 001D, 001F, 001K, 001Q SEE 25-41-51-140 FOR DET		001
-100B	D2549040501673		. . LIGHT-DOOR NP used on 001B, 001L, 001N SEE 25-41-51-14A FOR DET		001

- ITEM NOT ILLUSTRATED

FIG. ITEM	PART NUMBER	AIRLINE STOCK NUMBER	NOMENCLATURE 1234567	EFF CODE	UNITS PER ASSY
-100C	D2549030414673		. . LIGHT-DOOR NP used on 001E, 001G, 001H, 001M, 001P, 001R SEE 25-41-51-14A FOR DET		001
-100D	D2549030408273		. . LIGHT-DOOR NP used on 001J SEE 25-41-51-14A FOR DET		001
110A	D2549020401674		. . WASHBASIN UNIT NP used on 001A SEE 25-41-51-15M FOR DET		001
-110B	D2549020412674		. . WASHBASIN UNIT NP used on 001B, 001C, 001K, 001L, 001N SEE 25-41-51-15Q FOR DET		001
-110C	D2549020302074		. . WASHBASIN UNIT NP used on 001D, 001Q SEE 25-41-51-15Q FOR DET		001
-110D	D2549020414874		. . WASHBASIN UNIT NP used on 001E SEE 25-41-51-15R FOR DET		001
-110E	D2549020300674		. . WASHBASIN UNIT NP used on 001F SEE 25-41-51-15S FOR DET		001
-110F	D2549030704874		. . WASHBASIN UNIT NP used on 001G, 001R SEE 25-41-51-15Q FOR DET		001
-110G	D2549030705674		. . WASHBASIN UNIT NP used on 001H SEE 25-41-51-15Q FOR DET		001
-110H	D2549030704274		. . WASHBASIN UNIT NP used on 001J SEE 25-41-51-15S FOR DET		001

- ITEM NOT ILLUSTRATED

FIG. ITEM	PART NUMBER	AIRLINE STOCK NUMBER	NOMENCLATURE 1234567	EFF CODE	UNITS PER ASSY
-110J	D2549020701874		. . WASHBASIN UNIT NP used on 001M, 001P SEE 25-41-51-15R FOR DET		001
120A	D2549010609875		. . DOOR ASSY-WASHBASIN UNIT NP used on 001A SEE 25-41-51-16C FOR DET		001
-120B	D2549020605475		. . DOOR ASSY-WASHBASIN UNIT NP used on 001B SEE 25-41-51-16C FOR DET		001
-120C	D2549030606075		. . DOOR ASSY-WASHBASIN UNIT NP used on 001C, 001D, 001E, 001F, 001G, 001Q, 001R SEE 25-41-51-16E FOR DET		001
-120D	D2549030414675		. . DOOR ASSY-WASHBASIN UNIT NP used on 001H SEE 25-41-51-16B FOR DET		001
-120E	D2549030506075		. . DOOR ASSY-WASHBASIN UNIT NP used on 001J SEE 25-41-51-16B FOR DET		001
-120F	D2549020607075		. . DOOR ASSY-WASHBASIN UNIT NP used on 001K, 001L, 001N SEE 25-41-51-16B FOR DET		001
-120G	D2549030701875		. . DOOR ASSY-WASHBASIN UNIT NP used on 001M, 001P SEE 25-41-51-16B FOR DET		001

- ITEM NOT ILLUSTRATED

FIG. ITEM	PART NUMBER	AIRLINE STOCK NUMBER	NOMENCLATURE 1234567	EFF CODE	UNITS PER ASSY
130A	D2549010609876		. . PANEL ASSY-WASHBASIN UNIT NP used on 001A SEE 25-41-51-17D FOR DET		001
-130B	D2549020605476		. . PANEL ASSY-WASHBASIN UNIT NP used on 001B SEE 25-41-51-17D FOR DET		001
-130C	D2549030504876		. . PANEL ASSY-WASHBASIN UNIT NP used on 001C, 001D, 001E, 001F, 001K, 001L, 001N, 001Q SEE 25-41-51-17C FOR DET		001
-130D	D2549030409676		. . PANEL ASSY-WASHBASIN UNIT NP used on 001G, 001R SEE 25-41-51-17D FOR DET		001
-130E	D2549030414676		. . PANEL ASSY-WASHBASIN UNIT NP used on 001H SEE 25-41-51-17E FOR DET		001
-130F	D2549030506076		. . PANEL ASSY-WASHBASIN UNIT NP used on 001J SEE 25-41-51-17C FOR DET		001
-130G	D2549030701876		. . PANEL ASSY-WASHBASIN UNIT NP used on 001M, 001P SEE 25-41-51-17E FOR DET		001

- ITEM NOT ILLUSTRATED

FIG. ITEM	PART NUMBER	AIRLINE STOCK NUMBER	NOMENCLATURE 1234567		EFF CODE	UNITS PER ASSY
140A	D2549010611677		. . BIN-WASTE,CHUTE-WASTE AND EXTINGUISHER-FIRE used on 001A, 001B, 001C, 001D, 001E, 001F, 001G, 001H, 001J, 001K, 001L, 001M, 001N, 001P, 001Q, 001R SEE 25-41-51-180 FOR DET	NP		001
150A	D2549030504878		. . CABINET-SERVICE PRE VSB A2-254-25-054 used on 001A, 001B, 001D, 001K SEE 25-41-51-19E FOR DET	NP		001
-150B	D2549030504078		. . CABINET-SERVICE used on 001C, 001F, 001L, 001N SEE 25-41-51-19E FOR DET	NP		001
-150C	D2549020708078		. . CABINET-SERVICE PRE VSB A2-254-25-044 used on 001E, 001H, 001M SEE 25-41-51-19F FOR DET	NP		001
-150D	D2549030409678		. . CABINET-SERVICE PRE VSB A2-254-25-052 used on 001G SEE 25-41-51-19H FOR DET	NP		001
-150E	D2549030408278		. . CABINET-SERVICE used on 001J SEE 25-41-51-19F FOR DET	NP		001
-150F	R22540180800078		. . CABINET-SERVICE POST VSB A2-254-25-044 used on 001P SEE 25-41-51-19F FOR DET	NP		001
-150G	R22540119500078		. . CABINET-SERVICE POST VSB A2-254-25-054 used on 001Q SEE 25-41-51-19E FOR DET	NP		001

- ITEM NOT ILLUSTRATED

FIG. ITEM	PART NUMBER	AIRLINE STOCK NUMBER	NOMENCLATURE 1234567	EFF CODE	UNITS PER ASSY
-150H	R22540167100078		. . CABINET-SERVICE NP POST VSB A2-254-25-052 used on 001R SEE 25-41-51-19H FOR DET		001
160A	D2549010512679		. . TABLE-NURSING NP used on 001A SEE 25-41-51-20A FOR DET		001
-160B	D2549010510679		. . TABLE-NURSING NP used on 001B, 001C, 001D, 001F, 001K, 001L, 001N, 001Q SEE 25-41-51-20A FOR DET		001
-160C	D2549030614679		. . TABLE-NURSING NP used on 001E, 001G, 001M, 001P, 001R SEE 25-41-51-20B FOR DET		001
-160D	D2549030414679		. . TABLE-NURSING NP used on 001H SEE 25-41-51-20B FOR DET		001
-160E	D2549030408279		. . TABLE-NURSING NP used on 001J SEE 25-41-51-20B FOR DET		001
170A	D2549020802680		. . VENTILATION SYSTEM NP used on 001A, 001B, 001C, 001D, 001F, 001K, 001L, 001N, 001Q SEE 25-41-51-21B FOR DET		001
-170B	D2549030614680		. . VENTILATION SYSTEM NP used on 001E, 001G, 001H, 001M, 001P, 001R SEE 25-41-51-21B FOR DET		001
-170C	D2549030408280		. . VENTILATION SYSTEM NP used on 001J SEE 25-41-51-21B FOR DET		001

- ITEM NOT ILLUSTRATED

FIG. ITEM	PART NUMBER	AIRLINE STOCK NUMBER	NOMENCLATURE 1234567		EFF CODE	UNITS PER ASSY
180A	D2549020401281		. . WATER SYSTEM-POTABLE used on 001A, 001B, 001C, 001D, 001E, 001F, 001G, 001H, 001J, 001K, 001L, 001M, 001N, 001P, 001Q, 001R SEE 25-41-51-22D FOR DET	NP		001
190A	D2549010511082		. . WATER SYSTEM-WASTE used on 001A, 001B, 001C, 001E, 001F, 001G, 001K, 001L, 001M, 001N, 001P, 001R SEE 25-41-51-23B FOR DET	NP		001
-190B	D2549030614682		. . WATER SYSTEM-WASTE used on 001D, 001H, 001J, 001Q SEE 25-41-51-23D FOR DET	NP		001
200A	D2549020400883		. . ELECTRICAL SYSTEM used on 001A SEE 25-41-51-26R FOR DET	NP		001
-200B	D2549030414283		. . ELECTRICAL SYSTEM used on 001B, 001E, 001G, 001L, 001M, 001N, 001P, 001R SEE 25-41-51-26U FOR DET	NP		001
-200C	D2549030410283		. . ELECTRICAL SYSTEM used on 001C, 001D, 001K, 001Q SEE 25-41-51-26R FOR DET	NP		001
-200D	D2549020409883		. . ELECTRICAL SYSTEM used on 001F SEE 25-41-51-26R FOR DET	NP		001
-200E	D2549030413083		. . ELECTRICAL SYSTEM used on 001H SEE 25-41-51-26U FOR DET	NP		001
-200F	D2549030412283		. . ELECTRICAL SYSTEM used on 001J SEE 25-41-51-26R FOR DET	NP		001

- ITEM NOT ILLUSTRATED

FIG. ITEM	PART NUMBER	AIRLINE STOCK NUMBER	NOMENCLATURE 1234567		EFF CODE	UNITS PER ASSY
210A	D9250000000585		. . ELECTRICAL SYSTEM-COCKPIT DOOR LOCKING used on 001A, 001C, 001D, 001L, 001Q SEE 25-41-51-31C FOR DET	NP		001
-210B	D9250000000285		. . ELECTRICAL SYSTEM-COCKPIT DOOR LOCKING used on 001B, 001E, 001F, 001G, 001H, 001J, 001K, 001M, 001P, 001R SEE 25-41-51-31B FOR DET	NP		001
-210C	D2528641500485		. . ELECTRICAL SYSTEM-COCKPIT DOOR LOCKING used on 001N SEE 25-41-51-31C FOR DET	NP		001

- ITEM NOT ILLUSTRATED

THIS PAGE IS INTENTIONALLY LEFT BLANK

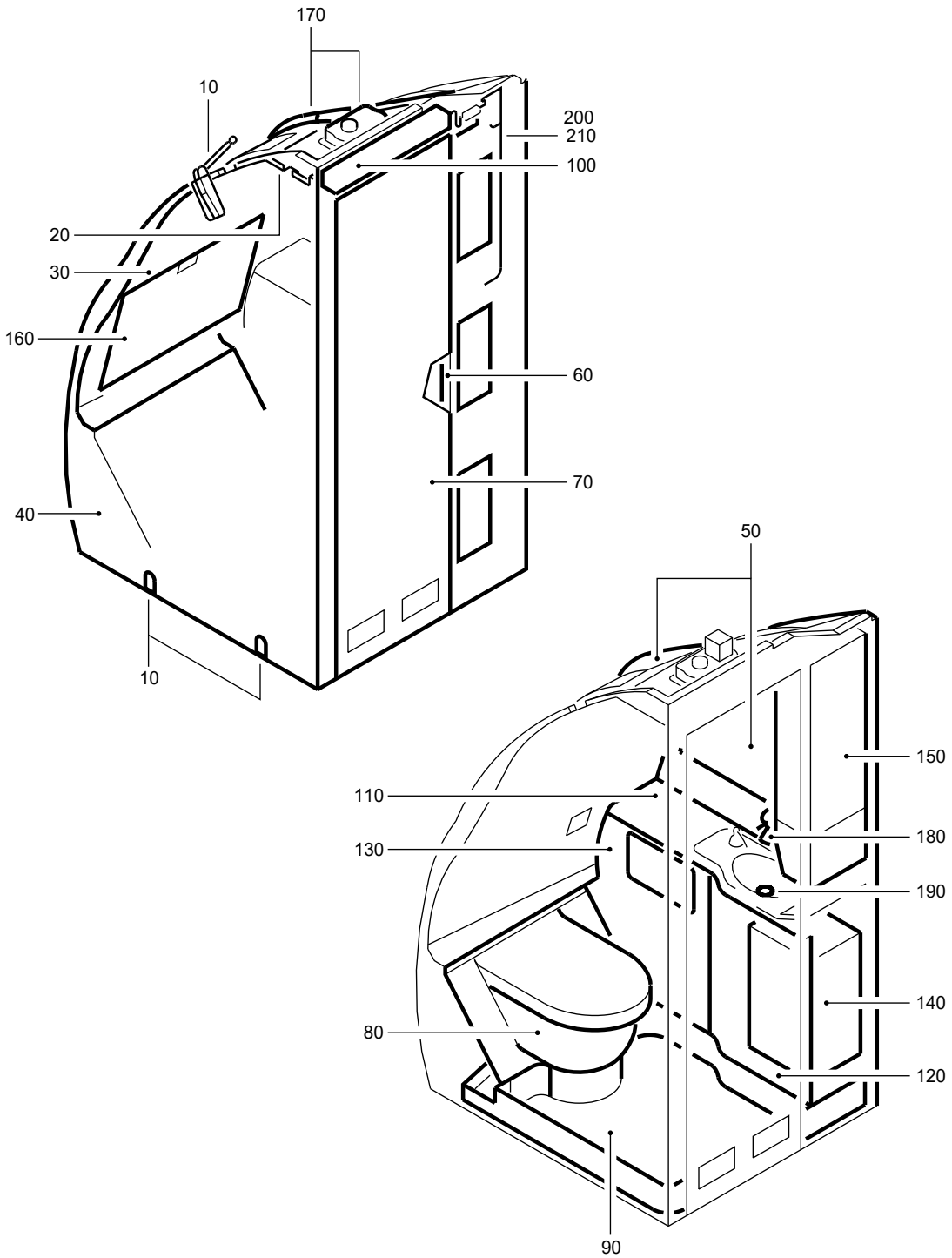

F_PL_254151_42_T_01_00

LAVATORY A ASSY
Figure 42T/EN254151SHEET42T01

FIG. ITEM	PART NUMBER	AIRLINE STOCK NUMBER	NOMENCLATURE 1234567	EFF CODE	UNITS PER ASSY
42T					
-001A	D2549020414600		. LAVATORY A ASSY SEE SIL 25-117 FOR DET		RF
-001B	D2549020300000		. LAVATORY A ASSY SEE SIL 25-117 FOR DET		RF
-001C	D2549030702800		. LAVATORY A ASSY SEE SIL 25-117 FOR DET		RF
-001D	D2549030703800		. LAVATORY A ASSY PRE VSB A2-254-25-054 SEE SIL 25-117 FOR DET		RF
-001E	D2549020414200		. LAVATORY A ASSY VSB A2-254-25-032 SEE SIL 25-117 FOR DET		RF
-001F	D2549010406000		. LAVATORY A ASSY SEE SIL 25-117 FOR DET		RF
-001G	D2549030704000		. LAVATORY A ASSY SEE SIL 25-117 FOR DET		RF
-001H	D2549020301800		. LAVATORY A ASSY SEE SIL 25-117 FOR DET		RF
-001J	D2549010406400		. LAVATORY A ASSY SEE SIL 25-117 FOR DET		RF
-001K	D2549030703600		. LAVATORY A ASSY SEE SIL 25-117 FOR DET		RF
-001L	D2549030704400		. LAVATORY A ASSY SEE SIL 25-117 FOR DET		RF
-001M	D2549030705200		. LAVATORY A ASSY PRE VSB A2-254-25-106 SEE SIL 25-117 FOR DET		RF

- ITEM NOT ILLUSTRATED

FIG. ITEM	PART NUMBER	AIRLINE STOCK NUMBER	NOMENCLATURE 1234567		EFF CODE	UNITS PER ASSY
-001N	R225401697-002		. LAVATORY A ASSY POST VSB A2-254-25-054 SEE SIL 25-117 FOR DET			RF
-001P	R225401689-006		. LAVATORY A ASSY POST VSB A2-254-25-106			RF
010A	D2549010613661		. . ATTACHMENT-LAVATORY PRE VSB A2-254-25-106 used on 001A, 001H, 001J, 001K, 001M SEE 25-41-51-02D FOR DET	NP		001
-010B	D2549030414061		. . ATTACHMENT-LAVATORY used on 001B SEE 25-41-51-02B FOR DET	NP		001
-010C	D2549040500861		. . ATTACHMENT-LAVATORY used on 001C, 001D, 001E, 001F, 001N SEE 25-41-51-02B FOR DET	NP		001
-010D	D2549030410861		. . ATTACHMENT-LAVATORY used on 001G SEE 25-41-51-02D FOR DET	NP		001
-010E	D2549030413461		. . ATTACHMENT-LAVATORY used on 001L SEE 25-41-51-02D FOR DET	NP		001
-010F	R22540168900661		. . ATTACHMENT-LAVATORY POST VSB A2-254-25-106 used on 001P SEE 25-41-51-02D FOR DET	NP		001
020A	D2549040500663		. . PANEL-CEILING used on 001A, 001C, 001D, 001N SEE 25-41-51-04A FOR DET	NP		001

- ITEM NOT ILLUSTRATED

FIG. ITEM	PART NUMBER	AIRLINE STOCK NUMBER	NOMENCLATURE 1234567		EFF CODE	UNITS PER ASSY
-020B	D2549030410263		. . PANEL-CEILING used on 001B SEE 25-41-51-04A FOR DET	NP		001
-020C	D2549030401463		. . PANEL-CEILING PRE VSB A2-254-25-106 used on 001E, 001F, 001H, 001J, 001K, 001M SEE 25-41-51-040 FOR DET	NP		001
-020D	D2549030410863		. . PANEL-CEILING used on 001G SEE 25-41-51-04A FOR DET	NP		001
-020E	D2549030408263		. . PANEL-CEILING used on 001L SEE 25-41-51-04A FOR DET	NP		001
-020F	R22540166200063		. . PANEL-CEILING POST VSB A2-254-25-106 used on 001P SEE 25-41-51-040 FOR DET	NP		001
030A	D2549020805464		. . WALL-REAR used on 001A, 001C, 001D, 001E, 001F, 001H, 001N SEE 25-41-51-05H FOR DET	NP		001
-030B	D2549030410264		. . WALL-REAR used on 001B SEE 25-41-51-05F FOR DET	NP		001
-030C	D2549020805264		. . WALL-REAR used on 001G SEE 25-41-51-05H FOR DET	NP		001
-030D	D2549010402464		. . WALL-REAR used on 001J SEE 25-41-51-05F FOR DET	NP		001

- ITEM NOT ILLUSTRATED

FIG. ITEM	PART NUMBER	AIRLINE STOCK NUMBER	NOMENCLATURE 1234567		EFF CODE	UNITS PER ASSY
-030E	D2549030406464		. . WALL-REAR PRE VSB A2-254-25-106 used on 001K, 001M SEE 25-41-51-05F FOR DET	NP		001
-030F	D2549030413464		. . WALL-REAR used on 001L SEE 25-41-51-05H FOR DET	NP		001
-030G	R22540166200064		. . WALL-REAR POST VSB A2-254-25-106 used on 001P SEE 25-41-51-05F FOR DET	NP		001
040A	D2549020414665		. . WALL-SIDE used on 001A SEE 25-41-51-48M FOR DET	NP		001
-040B	D2549020300065		. . WALL-SIDE used on 001B SEE 25-41-51-48F FOR DET	NP		001
-040C	D2549030702865		. . WALL-SIDE used on 001C SEE 25-41-51-48J FOR DET	NP		001
-040D	D2549030700065		. . WALL-SIDE PRE VSB A2-254-25-054 used on 001D SEE 25-41-51-48J FOR DET	NP		001
-040E	D2549020414265		. . WALL-SIDE PRE VSB A2-254-25-032 used on 001E SEE 25-41-51-48M FOR DET	NP		001
-040F	D2549020408665		. . WALL-SIDE used on 001F SEE 25-41-51-48H FOR DET	NP		001

- ITEM NOT ILLUSTRATED

FIG. ITEM	PART NUMBER	AIRLINE STOCK NUMBER	NOMENCLATURE 1234567	EFF CODE	UNITS PER ASSY
-040G	D2549030410865		. . WALL-SIDE NP used on 001G SEE 25-41-51-48A FOR DET		001
-040H	D2549020404065		. . WALL-SIDE NP used on 001H SEE 25-41-51-48C FOR DET		001
-040J	D2549010402465		. . WALL-SIDE NP used on 001J SEE 25-41-51-48L FOR DET		001
-040K	D2549030411865		. . WALL-SIDE NP used on 001K SEE 25-41-51-48J FOR DET		001
-040L	D2549030413465		. . WALL-SIDE NP used on 001L SEE 25-41-51-48L FOR DET		001
-040M	D2549030412865		. . WALL-SIDE NP PRE VSB A2-254-25-106 used on 001M SEE 25-41-51-48K FOR DET		001
-040N	D2549020414265		. . WALL-SIDE NP POST VSB A2-254-25-032 used on 001E SEE 25-41-51-48M FOR DET		001
-040P	R22540169700265		. . WALL-SIDE NP POST VSB A2-254-25-054 used on 001N SEE 25-41-51-48J FOR DET		001
-040Q	R22540168900465		. . WALL-SIDE NP POST VSB A2-254-25-106 used on 001P SEE 25-41-51-48K FOR DET		001

- ITEM NOT ILLUSTRATED

FIG. ITEM	PART NUMBER	AIRLINE STOCK NUMBER	NOMENCLATURE 1234567	EFF CODE	UNITS PER ASSY
050A	D2549020414666		. . HOUSING NP used on 001A SEE 25-41-51-49B FOR DET		001
-050B	D2549030410266		. . HOUSING NP used on 001B SEE 25-41-51-07W FOR DET		001
-050C	D2549030702866		. . HOUSING NP used on 001C SEE 25-41-51-49B FOR DET		001
-050D	D2549040500466		. . HOUSING NP used on 001D, 001N SEE 25-41-51-07X FOR DET		001
-050E	D2549010403866		. . HOUSING NP used on 001E SEE 25-41-51-490 FOR DET		001
-050F	D2549020406666		. . HOUSING NP used on 001F SEE 25-41-51-07X FOR DET		001
-050G	D2549030701666		. . HOUSING NP used on 001G SEE 25-41-51-49A FOR DET		001
-050H	D2549020400666		. . HOUSING NP used on 001H SEE 25-41-51-07W FOR DET		001
-050J	D2549010402466		. . HOUSING NP used on 001J SEE 25-41-51-490 FOR DET		001
-050K	D2549020402066		. . HOUSING NP used on 001K SEE 25-41-51-07Z FOR DET		001

- ITEM NOT ILLUSTRATED

FIG. ITEM	PART NUMBER	AIRLINE STOCK NUMBER	NOMENCLATURE 1234567		EFF CODE	UNITS PER ASSY
-050L	D2549030413466		. . HOUSING used on 001L SEE 25-41-51-490 FOR DET	NP		001
-050M	D2549010402266		. . HOUSING PRE VSB A2-254-25-106 used on 001M SEE 25-41-51-07X FOR DET	NP		001
-050N	R22540168900466		. . HOUSING POST VSB A2-254-25-106 used on 001P SEE 25-41-51-07X FOR DET	NP		001
060A	D2549020401269		. . DOOR INSTL used on 001A, 001B, 001C, 001D, 001E, 001F, 001G, 001H, 001J, 001K, 001L, 001M, 001N, 001P SEE 25-41-51-10A FOR DET	NP		001
070A	A225400278-820		. . DOOR ASSY-SINGLE used on 001A SEE 25-41-51-11M FOR DET			001
-070B	A225400278-540		. . DOOR ASSY-SINGLE used on 001B SEE 25-41-51-11M FOR DET			001
-070C	A225400276-574		. . DOOR ASSY-SINGLE used on 001C SEE 25-41-51-11E FOR DET			001
-070D	A225400278-514		. . DOOR ASSY-SINGLE used on 001D, 001F, 001N SEE 25-41-51-11H FOR DET			001
-070E	A225400276-944		. . DOOR ASSY-SINGLE used on 001E SEE 25-41-51-11F FOR DET			001

- ITEM NOT ILLUSTRATED

FIG. ITEM	PART NUMBER	AIRLINE STOCK NUMBER	NOMENCLATURE 1234567	EFF CODE	UNITS PER ASSY
-070F	A225400278-518		. . DOOR ASSY-SINGLE used on 001G SEE 25-41-51-11K FOR DET		001
-070G	A225400278-818		. . DOOR ASSY-SINGLE used on 001H SEE 25-41-51-11K FOR DET		001
-070H	A225400278-838		. . DOOR ASSY-SINGLE used on 001J SEE 25-41-51-11M FOR DET		001
-070J	A225400278-516		. . DOOR ASSY-SINGLE used on 001K SEE 25-41-51-11K FOR DET		001
-070K	A225400278-836		. . DOOR ASSY-SINGLE used on 001L SEE 25-41-51-11M FOR DET		001
-070L	A225400278-834		. . DOOR ASSY-SINGLE PRE VSB A2-254-25-106 used on 001M SEE 25-41-51-11M FOR DET		001
-070M	A225400278-928		. . DOOR ASSY-SINGLE POST VSB A2-254-25-106 used on 001P SEE 25-41-51-11M FOR DET		001
080A	D2549020403271		. . TOILET UNIT AND TOILET SHROUD NP used on 001A SEE 25-41-51-12G FOR DET		001

- ITEM NOT ILLUSTRATED

FIG. ITEM	PART NUMBER	AIRLINE STOCK NUMBER	NOMENCLATURE 1234567		EFF CODE	UNITS PER ASSY
-080B	D2549020811871		. . TOILET UNIT AND TOILET SHROUD PRE VSB A2-254-25-106 used on 001B, 001C, 001D, 001E, 001F, 001J, 001K, 001M, 001N SEE 25-41-51-12G FOR DET	NP		001
-080C	D2549030410671		. . TOILET UNIT AND TOILET SHROUD used on 001G SEE 25-41-51-12G FOR DET	NP		001
-080D	D2549030410071		. . TOILET UNIT AND TOILET SHROUD used on 001H SEE 25-41-51-12G FOR DET	NP		001
-080E	D2549030412271		. . TOILET UNIT AND TOILET SHROUD used on 001L SEE 25-41-51-12H FOR DET	NP		001
-080F	R22540168900471		. . TOILET UNIT AND TOILET SHROUD POST VSB A2-254-25-106 used on 001P SEE 25-41-51-12G FOR DET	NP		001
090A	D2549020414672		. . PAN-FLOOR used on 001A SEE 25-41-51-13S FOR DET	NP		001
-090B	D2549030410272		. . PAN-FLOOR used on 001B, 001L SEE 25-41-51-13N FOR DET	NP		001
-090C	D2549030411672		. . PAN-FLOOR used on 001C SEE 25-41-51-13R FOR DET	NP		001

- ITEM NOT ILLUSTRATED

FIG. ITEM	PART NUMBER	AIRLINE STOCK NUMBER	NOMENCLATURE 1234567	EFF CODE	UNITS PER ASSY
-090D	D2549020400672		. . PAN-FLOOR NP used on 001D, 001H, 001N SEE 25-41-51-13N FOR DET		001
-090E	D2549020410272		. . PAN-FLOOR NP used on 001E SEE 25-41-51-13S FOR DET		001
-090F	D2549030409672		. . PAN-FLOOR NP PRE VSB A2-254-25-106 used on 001F, 001K, 001M SEE 25-41-51-13N FOR DET		001
-090G	D2549030410872		. . PAN-FLOOR NP used on 001G SEE 25-41-51-13Q FOR DET		001
-090H	D2549010402472		. . PAN-FLOOR NP used on 001J SEE 25-41-51-13S FOR DET		001
-090J	R22540168900472		. . PAN-FLOOR NP POST VSB A2-254-25-106 used on 001P SEE 25-41-51-13N FOR DET		001
100A	D2549040501673		. . LIGHT-DOOR NP used on 001A, 001C, 001D, 001N SEE 25-41-51-14A FOR DET		001
-100B	D2549020612273		. . LIGHT-DOOR NP used on 001B SEE 25-41-51-14A FOR DET		001
-100C	D2549010512673		. . LIGHT-DOOR NP PRE VSB A2-254-25-106 used on 001E, 001F, 001H, 001J, 001K, 001M SEE 25-41-51-140 FOR DET		001

- ITEM NOT ILLUSTRATED

FIG. ITEM	PART NUMBER	AIRLINE STOCK NUMBER	NOMENCLATURE 1234567		EFF CODE	UNITS PER ASSY
-100D	D2549030414273		. . LIGHT-DOOR used on 001G SEE 25-41-51-14A FOR DET	NP		001
-100E	D2549030408273		. . LIGHT-DOOR used on 001L SEE 25-41-51-14A FOR DET	NP		001
-100F	R22540166200073		. . LIGHT-DOOR POST VSB A2-254-25-106 used on 001P SEE 25-41-51-140 FOR DET	NP		001
110A	D2549020412674		. . WASHBASIN UNIT PRE VSB A2-254-25-106 used on 001A, 001C, 001D, 001F, 001G, 001M, 001N SEE 25-41-51-15Q FOR DET	NP		001
-110B	D2549030410274		. . WASHBASIN UNIT used on 001B SEE 25-41-51-15L FOR DET	NP		001
-110C	D2549020302074		. . WASHBASIN UNIT used on 001E, 001K SEE 25-41-51-15Q FOR DET	NP		001
-110D	D2549020300674		. . WASHBASIN UNIT used on 001H SEE 25-41-51-15S FOR DET	NP		001
-110E	D2549010406474		. . WASHBASIN UNIT used on 001J SEE 25-41-51-15Q FOR DET	NP		001
-110F	D2549030704474		. . WASHBASIN UNIT used on 001L SEE 25-41-51-15S FOR DET	NP		001

- ITEM NOT ILLUSTRATED

FIG. ITEM	PART NUMBER	AIRLINE STOCK NUMBER	NOMENCLATURE 1234567		EFF CODE	UNITS PER ASSY
-110G	R22540168900674		. . WASHBASIN UNIT POST VSB A2-254-25-106 used on 001P SEE 25-41-51-15Q FOR DET	NP		001
120A	D2549020605475		. . DOOR ASSY-WASHBASIN UNIT used on 001A SEE 25-41-51-16C FOR DET	NP		001
-120B	D2549030606075		. . DOOR ASSY-WASHBASIN UNIT PRE VSB A2-254-25-106 used on 001B, 001C, 001D, 001E, 001F, 001J, 001M, 001N SEE 25-41-51-16E FOR DET	NP		001
-120C	D2549020510675		. . DOOR ASSY-WASHBASIN UNIT used on 001G SEE 25-41-51-16D FOR DET	NP		001
-120D	D2549020607675		. . DOOR ASSY-WASHBASIN UNIT used on 001H SEE 25-41-51-16C FOR DET	NP		001
-120E	D2549020607075		. . DOOR ASSY-WASHBASIN UNIT used on 001K SEE 25-41-51-16B FOR DET	NP		001
-120F	D2549030506075		. . DOOR ASSY-WASHBASIN UNIT used on 001L SEE 25-41-51-16B FOR DET	NP		001

- ITEM NOT ILLUSTRATED

FIG. ITEM	PART NUMBER	AIRLINE STOCK NUMBER	NOMENCLATURE 1234567		EFF CODE	UNITS PER ASSY
-120G	R22540166200275		. . DOOR ASSY-WASHBASIN UNIT POST VSB A2-254-25-106 used on 001P SEE 25-41-51-16E FOR DET	NP		001
130A	D2549020605476		. . PANEL ASSY-WASHBASIN UNIT used on 001A SEE 25-41-51-17D FOR DET	NP		001
-130B	D2549030504876		. . PANEL ASSY-WASHBASIN UNIT PRE VSB A2-254-25-106 used on 001B, 001C, 001D, 001E, 001F, 001J, 001K, 001M, 001N SEE 25-41-51-17C FOR DET	NP		001
-130C	D2549020710076		. . PANEL ASSY-WASHBASIN UNIT used on 001G SEE 25-41-51-17D FOR DET	NP		001
-130D	D2549020607676		. . PANEL ASSY-WASHBASIN UNIT used on 001H SEE 25-41-51-17C FOR DET	NP		001
-130E	D2549030413476		. . PANEL ASSY-WASHBASIN UNIT used on 001L SEE 25-41-51-17E FOR DET	NP		001
-130F	R22540168900476		. . PANEL ASSY-WASHBASIN UNIT POST VSB A2-254-25-106 used on 001P SEE 25-41-51-17C FOR DET	NP		001

- ITEM NOT ILLUSTRATED

FIG. ITEM	PART NUMBER	AIRLINE STOCK NUMBER	NOMENCLATURE 1234567	EFF CODE	UNITS PER ASSY
140A	D2549010611677		. . BIN-WASTE,CHUTE-WASTE AND EXTINGUISHER-FIRE NP used on 001A, 001B, 001C, 001D, 001E, 001F, 001G, 001H, 001J, 001K, 001L, 001M, 001N, 001P SEE 25-41-51-180 FOR DET		001
150A	D2549030504878		. . CABINET-SERVICE NP PRE VSB A2-254-25-032 used on 001A, 001C, 001E SEE 25-41-51-19E FOR DET		001
-150B	D2549020708078		. . CABINET-SERVICE NP used on 001B SEE 25-41-51-19F FOR DET		001
-150C	D2549030504078		. . CABINET-SERVICE NP PRE VSB A2-254-25-054 PRE VSB A2-254-25-106 used on 001D, 001F, 001H, 001M SEE 25-41-51-19E FOR DET		001
-150D	D2549020510678		. . CABINET-SERVICE NP used on 001G SEE 25-41-51-19F FOR DET		001
-150E	D2549020407478		. . CABINET-SERVICE NP used on 001J SEE 25-41-51-19J FOR DET		001
-150F	D2549030505278		. . CABINET-SERVICE NP used on 001K SEE 25-41-51-19E FOR DET		001
-150G	D2549010513878		. . CABINET-SERVICE NP used on 001L SEE 25-41-51-19F FOR DET		001

- ITEM NOT ILLUSTRATED

FIG. ITEM	PART NUMBER	AIRLINE STOCK NUMBER	NOMENCLATURE 1234567		EFF CODE	UNITS PER ASSY
-150H	D2549030504878		. . CABINET-SERVICE POST VSB A2-254-25-032 used on 001E SEE 25-41-51-19E FOR DET	NP		001
-150J	R22540111500078		. . CABINET-SERVICE POST VSB A2-254-25-054 used on 001N SEE 25-41-51-19E FOR DET	NP		001
-150K	R22540166200078		. . CABINET-SERVICE POST VSB A2-254-25-106 used on 001P SEE 25-41-51-19E FOR DET	NP		001
160A	D2549010510679		. . TABLE-NURSING PRE VSB A2-254-25-106 used on 001A, 001D, 001E, 001F, 001H, 001J, 001K, 001M, 001N SEE 25-41-51-20A FOR DET	NP		001
-160B	D2549030614679		. . TABLE-NURSING used on 001B SEE 25-41-51-20B FOR DET	NP		001
-160C	D2549010512679		. . TABLE-NURSING used on 001C SEE 25-41-51-20A FOR DET	NP		001
-160D	D2549020510679		. . TABLE-NURSING used on 001G SEE 25-41-51-20B FOR DET	NP		001
-160E	D2549030408279		. . TABLE-NURSING used on 001L SEE 25-41-51-20B FOR DET	NP		001
-160F	R22540166200079		. . TABLE-NURSING POST VSB A2-254-25-106 used on 001P SEE 25-41-51-20A FOR DET	NP		001

- ITEM NOT ILLUSTRATED

FIG. ITEM	PART NUMBER	AIRLINE STOCK NUMBER	NOMENCLATURE 1234567		EFF CODE	UNITS PER ASSY
170A	D2549020802680		. . VENTILATION SYSTEM PRE VSB A2-254-25-106 used on 001A, 001C, 001D, 001E, 001F, 001H, 001J, 001K, 001M, 001N SEE 25-41-51-21B FOR DET	NP		001
-170B	D2549030614680		. . VENTILATION SYSTEM used on 001B SEE 25-41-51-21B FOR DET	NP		001
-170C	D2549020510680		. . VENTILATION SYSTEM used on 001G SEE 25-41-51-21B FOR DET	NP		001
-170D	D2549030413480		. . VENTILATION SYSTEM used on 001L SEE 25-41-51-21B FOR DET	NP		001
-170E	R22540166200080		. . VENTILATION SYSTEM POST VSB A2-254-25-106 used on 001P SEE 25-41-51-21B FOR DET	NP		001
180A	D2549020401281		. . WATER SYSTEM-POTABLE used on 001A, 001B, 001D, 001E, 001F, 001G, 001H, 001J, 001K, 001M, 001N, 001P SEE 25-41-51-22D FOR DET	NP		001
-180B	D2549030410081		. . WATER SYSTEM-POTABLE used on 001C SEE 25-41-51-22G FOR DET	NP		001
-180C	D2549030700681		. . WATER SYSTEM-POTABLE used on 001L SEE 25-41-51-22F FOR DET	NP		001

- ITEM NOT ILLUSTRATED

FIG. ITEM	PART NUMBER	AIRLINE STOCK NUMBER	NOMENCLATURE 1234567	EFF CODE	UNITS PER ASSY
190A	D2549010511082		. . WATER SYSTEM-WASTE NP used on 001A, 001D, 001F, 001G, 001H, 001J, 001N SEE 25-41-51-23B FOR DET		001
-190B	D2549030504882		. . WATER SYSTEM-WASTE NP used on 001B, 001E, 001K, 001L SEE 25-41-51-23B FOR DET		001
-190C	D2549030405082		. . WATER SYSTEM-WASTE NP used on 001C SEE 25-41-51-23B FOR DET		001
-190D	D2549020800882		. . WATER SYSTEM-WASTE NP used on 001M, 001P SEE 25-41-51-23D FOR DET		001
200A	D2549020414683		. . ELECTRICAL SYSTEM NP used on 001A SEE 25-41-51-26U FOR DET		001
-200B	D2549030410283		. . ELECTRICAL SYSTEM NP used on 001B, 001F, 001K SEE 25-41-51-26R FOR DET		001
-200C	D2549030414283		. . ELECTRICAL SYSTEM NP used on 001C, 001D, 001G, 001N SEE 25-41-51-26U FOR DET		001
-200D	D2549020400883		. . ELECTRICAL SYSTEM NP used on 001E, 001M, 001P SEE 25-41-51-26R FOR DET		001
-200E	D2549020409883		. . ELECTRICAL SYSTEM NP used on 001H SEE 25-41-51-26R FOR DET		001
-200F	D2549010403483		. . ELECTRICAL SYSTEM NP used on 001J SEE 25-41-51-26R FOR DET		001

- ITEM NOT ILLUSTRATED

FIG. ITEM	PART NUMBER	AIRLINE STOCK NUMBER	NOMENCLATURE 1234567		EFF CODE	UNITS PER ASSY
-200G	D2549030413483		. . ELECTRICAL SYSTEM used on 001L SEE 25-41-51-26R FOR DET	NP		001
210A	D9250000000285		. . ELECTRICAL SYSTEM-COCKPIT DOOR LOCKING used on 001A, 001B, 001C, 001D, 001E, 001F, 001H, 001J, 001K, 001L, 001M, 001N, 001P SEE 25-41-51-31B FOR DET	NP		001
-210B	D9250000000585		. . ELECTRICAL SYSTEM-COCKPIT DOOR LOCKING used on 001G SEE 25-41-51-31C FOR DET	NP		001

- ITEM NOT ILLUSTRATED

THIS PAGE IS INTENTIONALLY LEFT BLANK

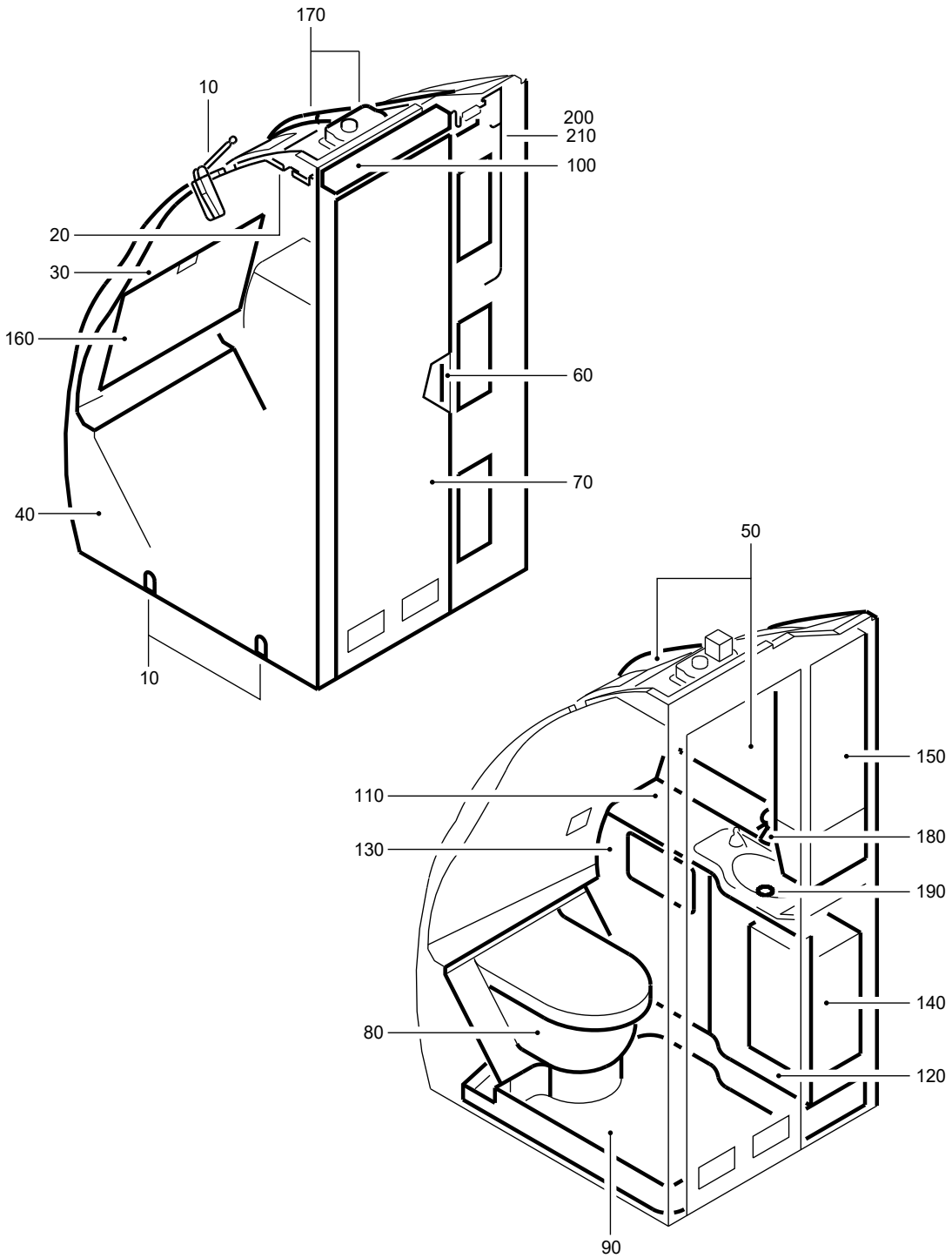

F_PL_254151_42_U_01_00

LAVATORY A ASSY
Figure 42U/EN254151SHEET42U01

FIG. ITEM	PART NUMBER	AIRLINE STOCK NUMBER	NOMENCLATURE 1234567	EFF CODE	UNITS PER ASSY
42U					
-001A	D2549020413800		. LAVATORY A ASSY SEE SIL 25-117 FOR DET		RF
-001B	D2549010407000		. LAVATORY A ASSY SEE SIL 25-117 FOR DET		RF
-001C	D2549020300400		. LAVATORY A ASSY SEE SIL 25-117 FOR DET		RF
-001D	D2549020301600		. LAVATORY A ASSY SEE SIL 25-117 FOR DET		RF
-001E	D2549030704600		. LAVATORY A ASSY SEE SIL 25-117 FOR DET		RF
-001F	D2549030703000		. LAVATORY A ASSY SEE SIL 25-117 FOR DET		RF
-001G	D2549040502000		. LAVATORY A ASSY PRE VSB A2-254-25-070 SEE SIL 25-117 FOR DET		RF
-001H	D2549010406800		. LAVATORY A ASSY SEE SIL 25-117 FOR DET		RF
-001J	D2549030703200		. LAVATORY A ASSY SEE SIL 25-117 FOR DET		RF
-001K	D2549020413800		. LAVATORY A ASSY		RF
-001L	R225401803-002		. LAVATORY A ASSY POST VSB A2-254-25-070		RF
010A	D2549010613661		. . ATTACHMENT-LAVATORY NP used on 001A, 001B, 001C, 001E, 001G, 001H, 001K, 001L SEE 25-41-51-02D FOR DET		001

- ITEM NOT ILLUSTRATED

FIG. ITEM	PART NUMBER	AIRLINE STOCK NUMBER	NOMENCLATURE 1234567	EFF CODE	UNITS PER ASSY
-010B	D2549030414061		. . ATTACHMENT-LAVATORY NP used on 001D SEE 25-41-51-02B FOR DET		001
-010C	D2549030703061		. . ATTACHMENT-LAVATORY NP used on 001F SEE 25-41-51-02D FOR DET		001
-010D	D2549030703261		. . ATTACHMENT-LAVATORY NP used on 001J SEE 25-41-51-02D FOR DET		001
020A	D2549040500663		. . PANEL-CEILING NP used on 001A, 001E, 001F, 001G, 001K, 001L SEE 25-41-51-04A FOR DET		001
-020B	D2549030401463		. . PANEL-CEILING NP used on 001B, 001C, 001H SEE 25-41-51-040 FOR DET		001
-020C	D2549030409663		. . PANEL-CEILING NP used on 001D, 001J SEE 25-41-51-04A FOR DET		001
030A	D2549020807864		. . WALL-REAR NP used on 001A, 001K SEE 25-41-51-05H FOR DET		001
-030B	D2549020805464		. . WALL-REAR NP used on 001B, 001C, 001F, 001H SEE 25-41-51-05H FOR DET		001
-030C	D2549030410264		. . WALL-REAR NP used on 001D SEE 25-41-51-05F FOR DET		001
-030D	D2549030700864		. . WALL-REAR NP used on 001E SEE 25-41-51-05H FOR DET		001

- ITEM NOT ILLUSTRATED

FIG. ITEM	PART NUMBER	AIRLINE STOCK NUMBER	NOMENCLATURE 1234567		EFF CODE	UNITS PER ASSY
-030E	D2549030406464		. . WALL-REAR used on 001G, 001L SEE 25-41-51-05F FOR DET	NP		001
-030F	D2549030703264		. . WALL-REAR used on 001J SEE 25-41-51-05F FOR DET	NP		001
040A	D2549020413865		. . WALL-SIDE used on 001A SEE 25-41-51-48M FOR DET	NP		001
-040B	D2549010405065		. . WALL-SIDE used on 001B SEE 25-41-51-48L FOR DET	NP		001
-040C	D2549020409265		. . WALL-SIDE used on 001C SEE 25-41-51-48K FOR DET	NP		001
-040D	D2549020301665		. . WALL-SIDE used on 001D SEE 25-41-51-48M FOR DET	NP		001
-040E	D2549030700865		. . WALL-SIDE used on 001E SEE 25-41-51-48A FOR DET	NP		001
-040F	D2549030703065		. . WALL-SIDE used on 001F SEE 25-41-51-48J FOR DET	NP		001
-040G	D2549040501865		. . WALL-SIDE used on 001G, 001L SEE 25-41-51-48J FOR DET	NP		001
-040H	D2549010403665		. . WALL-SIDE used on 001H SEE 25-41-51-48D FOR DET	NP		001

- ITEM NOT ILLUSTRATED

FIG. ITEM	PART NUMBER	AIRLINE STOCK NUMBER	NOMENCLATURE 1234567	EFF CODE	UNITS PER ASSY
-040J	D2549030703265		. . WALL-SIDE NP used on 001J SEE 25-41-51-48M FOR DET		001
-040K	D2547160103465		. . WALL-SIDE NP used on 001K SEE 25-41-51-48M FOR DET		001
050A	D2549020413866		. . HOUSING NP used on 001A SEE 25-41-51-49B FOR DET		001
-050B	D2549010405866		. . HOUSING NP used on 001B SEE 25-41-51-490 FOR DET		001
-050C	D2549020409266		. . HOUSING NP used on 001C SEE 25-41-51-07Z FOR DET		001
-050D	D2549020412266		. . HOUSING NP used on 001D, 001J SEE 25-41-51-49A FOR DET		001
-050E	D2549030700866		. . HOUSING NP used on 001E SEE 25-41-51-490 FOR DET		001
-050F	D2549030703066		. . HOUSING NP used on 001F SEE 25-41-51-49B FOR DET		001
-050G	D2549040500466		. . HOUSING NP used on 001G, 001L SEE 25-41-51-07X FOR DET		001
-050H	D2549030410066		. . HOUSING NP used on 001H SEE 25-41-51-07W FOR DET		001

- ITEM NOT ILLUSTRATED

FIG. ITEM	PART NUMBER	AIRLINE STOCK NUMBER	NOMENCLATURE 1234567	EFF CODE	UNITS PER ASSY
-050J	D2547160103466		. . HOUSING NP used on 001K SEE 25-41-51-49B FOR DET		001
060A	D2549020401269		. . DOOR INSTL NP used on 001A, 001B, 001C, 001D, 001E, 001F, 001G, 001H, 001J, 001K, 001L SEE 25-41-51-10A FOR DET		001
070A	A225400276-904		. . DOOR ASSY-SINGLE used on 001A, 001K SEE 25-41-51-11B FOR DET		001
-070B	A225400276-928		. . DOOR ASSY-SINGLE used on 001B SEE 25-41-51-11F FOR DET		001
-070C	A225400276-596		. . DOOR ASSY-SINGLE used on 001C SEE 25-41-51-11G FOR DET		001
-070D	A225400278-848		. . DOOR ASSY-SINGLE used on 001D, 001J SEE 25-41-51-11P FOR DET		001
-070E	A225400278-842		. . DOOR ASSY-SINGLE used on 001E SEE 25-41-51-11P FOR DET		001
-070F	A225400278-544		. . DOOR ASSY-SINGLE used on 001F SEE 25-41-51-11P FOR DET		001
-070G	A225400278-514		. . DOOR ASSY-SINGLE used on 001G, 001L SEE 25-41-51-11H FOR DET		001
-070H	A225400278-510		. . DOOR ASSY-SINGLE used on 001H SEE 25-41-51-11H FOR DET		001

- ITEM NOT ILLUSTRATED

FIG. ITEM	PART NUMBER	AIRLINE STOCK NUMBER	NOMENCLATURE 1234567	EFF CODE	UNITS PER ASSY
080A	D2549020811871		. . TOILET UNIT AND TOILET SHROUD NP used on 001A, 001D, 001H, 001J, 001K SEE 25-41-51-12G FOR DET		001
-080B	D2549020400871		. . TOILET UNIT AND TOILET SHROUD NP used on 001B SEE 25-41-51-12G FOR DET		001
-080C	D2549010401071		. . TOILET UNIT AND TOILET SHROUD NP used on 001C SEE 25-41-51-12G FOR DET		001
-080D	D2549030700871		. . TOILET UNIT AND TOILET SHROUD NP used on 001E SEE 25-41-51-12H FOR DET		001
-080E	D2549030703071		. . TOILET UNIT AND TOILET SHROUD NP used on 001F SEE 25-41-51-12H FOR DET		001
-080F	D2549030412471		. . TOILET UNIT AND TOILET SHROUD NP used on 001G, 001L SEE 25-41-51-12G FOR DET		001
090A	D2549020413872		. . PAN-FLOOR NP used on 001A, 001K SEE 25-41-51-13S FOR DET		001
-090B	D2549020401672		. . PAN-FLOOR NP used on 001B SEE 25-41-51-13P FOR DET		001

- ITEM NOT ILLUSTRATED

FIG. ITEM	PART NUMBER	AIRLINE STOCK NUMBER	NOMENCLATURE 1234567	EFF CODE	UNITS PER ASSY
-090C	D2549020409272		. . PAN-FLOOR NP used on 001C SEE 25-41-51-13Q FOR DET		001
-090D	D2549020410872		. . PAN-FLOOR NP used on 001D, 001F, 001J SEE 25-41-51-13S FOR DET		001
-090E	D2549030700872		. . PAN-FLOOR NP used on 001E SEE 25-41-51-13S FOR DET		001
-090F	D2549030411472		. . PAN-FLOOR NP used on 001G, 001L SEE 25-41-51-13P FOR DET		001
-090G	D2549030409672		. . PAN-FLOOR NP used on 001H SEE 25-41-51-13N FOR DET		001
100A	D2549040501673		. . LIGHT-DOOR NP used on 001A, 001E, 001F, 001G, 001K, 001L SEE 25-41-51-14A FOR DET		001
-100B	D2549010512673		. . LIGHT-DOOR NP used on 001B, 001C, 001H SEE 25-41-51-140 FOR DET		001
-100C	D2549030414673		. . LIGHT-DOOR NP used on 001D, 001J SEE 25-41-51-14A FOR DET		001
110A	D2549020412674		. . WASHBASIN UNIT NP used on 001A, 001D, 001F, 001G, 001J, 001K, 001L SEE 25-41-51-15Q FOR DET		001
-110B	D2549010407074		. . WASHBASIN UNIT NP used on 001B, 001C SEE 25-41-51-15Q FOR DET		001

- ITEM NOT ILLUSTRATED

FIG. ITEM	PART NUMBER	AIRLINE STOCK NUMBER	NOMENCLATURE 1234567	EFF CODE	UNITS PER ASSY
-110C	D2549020302074		. . WASHBASIN UNIT NP used on 001E, 001H SEE 25-41-51-15Q FOR DET		001
120A	D2549030606075		. . DOOR ASSY-WASHBASIN UNIT NP used on 001A, 001D, 001H, 001K SEE 25-41-51-16E FOR DET		001
-120B	D2549010609875		. . DOOR ASSY-WASHBASIN UNIT NP used on 001B SEE 25-41-51-16C FOR DET		001
-120C	D2549010603675		. . DOOR ASSY-WASHBASIN UNIT NP used on 001C SEE 25-41-51-16C FOR DET		001
-120D	D2549010511475		. . DOOR ASSY-WASHBASIN UNIT NP used on 001E SEE 25-41-51-16B FOR DET		001
-120E	D2549030703075		. . DOOR ASSY-WASHBASIN UNIT NP used on 001F SEE 25-41-51-16D FOR DET		001
-120F	D2549030504675		. . DOOR ASSY-WASHBASIN UNIT NP used on 001G, 001L SEE 25-41-51-16B FOR DET		001
-120G	D2549020607075		. . DOOR ASSY-WASHBASIN UNIT NP used on 001J SEE 25-41-51-16B FOR DET		001

- ITEM NOT ILLUSTRATED

FIG. ITEM	PART NUMBER	AIRLINE STOCK NUMBER	NOMENCLATURE 1234567		EFF CODE	UNITS PER ASSY
130A	D2549030504876		. . PANEL ASSY-WASHBASIN UNIT used on 001A, 001H, 001J, 001K SEE 25-41-51-17C FOR DET	NP		001
-130B	D2549010609876		. . PANEL ASSY-WASHBASIN UNIT used on 001B SEE 25-41-51-17D FOR DET	NP		001
-130C	D2549010603676		. . PANEL ASSY-WASHBASIN UNIT used on 001C SEE 25-41-51-17D FOR DET	NP		001
-130D	D2549030511076		. . PANEL ASSY-WASHBASIN UNIT used on 001D SEE 25-41-51-17D FOR DET	NP		001
-130E	D2549010511476		. . PANEL ASSY-WASHBASIN UNIT used on 001E SEE 25-41-51-17C FOR DET	NP		001
-130F	D2549030703076		. . PANEL ASSY-WASHBASIN UNIT used on 001F SEE 25-41-51-17E FOR DET	NP		001
-130G	D2549030504676		. . PANEL ASSY-WASHBASIN UNIT used on 001G, 001L SEE 25-41-51-17C FOR DET	NP		001
140A	D2549010611677		. . BIN-WASTE,CHUTE-WASTE AND EXTINGUISHER-FIRE used on 001A, 001B, 001C, 001D, 001F, 001G, 001H, 001J, 001K, 001L SEE 25-41-51-180 FOR DET	NP		001

- ITEM NOT ILLUSTRATED

FIG. ITEM	PART NUMBER	AIRLINE STOCK NUMBER	NOMENCLATURE 1234567	EFF CODE	UNITS PER ASSY
-140B	D2549030504877		. . BIN-WASTE,CHUTE-WASTE AND EXTINGUISHER-FIRE NP used on 001E SEE 25-41-51-180 FOR DET		001
150A	D2549030504878		. . CABINET-SERVICE NP used on 001A, 001B, 001C, 001K SEE 25-41-51-19E FOR DET		001
-150B	D2549020708078		. . CABINET-SERVICE NP used on 001D, 001J SEE 25-41-51-19F FOR DET		001
-150C	D2549020400078		. . CABINET-SERVICE NP used on 001E SEE 25-41-51-19H FOR DET		001
-150D	D2549030504078		. . CABINET-SERVICE NP used on 001F, 001G, 001L SEE 25-41-51-19E FOR DET		001
-150E	D2549030505278		. . CABINET-SERVICE NP used on 001H SEE 25-41-51-19E FOR DET		001
160A	D2549010510679		. . TABLE-NURSING NP used on 001A, 001C, 001E, 001F, 001K SEE 25-41-51-20A FOR DET		001
-160B	D2549010512679		. . TABLE-NURSING NP used on 001B, 001G, 001H, 001L SEE 25-41-51-20A FOR DET		001
-160C	D2549030614679		. . TABLE-NURSING NP used on 001D, 001J SEE 25-41-51-20B FOR DET		001

- ITEM NOT ILLUSTRATED

FIG. ITEM	PART NUMBER	AIRLINE STOCK NUMBER	NOMENCLATURE 1234567		EFF CODE	UNITS PER ASSY
170A	D2549020802680		. . VENTILATION SYSTEM used on 001A, 001B, 001C, 001E, 001F, 001G, 001H, 001K, 001L SEE 25-41-51-21B FOR DET	NP		001
-170B	D2549030614680		. . VENTILATION SYSTEM used on 001D, 001J SEE 25-41-51-21B FOR DET	NP		001
180A	D2549020401281		. . WATER SYSTEM-POTABLE used on 001A, 001B, 001C, 001D, 001E, 001F, 001G, 001H, 001J, 001K, 001L SEE 25-41-51-22D FOR DET	NP		001
190A	D2549010511082		. . WATER SYSTEM-WASTE used on 001A, 001B, 001C, 001D, 001F, 001G, 001J, 001K, 001L SEE 25-41-51-23B FOR DET	NP		001
-190B	D2549030504882		. . WATER SYSTEM-WASTE used on 001E, 001H SEE 25-41-51-23B FOR DET	NP		001
200A	D2549030414283		. . ELECTRICAL SYSTEM used on 001A, 001E, 001G, 001K, 001L SEE 25-41-51-26U FOR DET	NP		001
-200B	D2549020400883		. . ELECTRICAL SYSTEM used on 001B SEE 25-41-51-26R FOR DET	NP		001
-200C	D2549030410283		. . ELECTRICAL SYSTEM used on 001C, 001H SEE 25-41-51-26R FOR DET	NP		001
-200D	D2549020301683		. . ELECTRICAL SYSTEM used on 001D, 001F SEE 25-41-51-26U FOR DET	NP		001

- ITEM NOT ILLUSTRATED

FIG. ITEM	PART NUMBER	AIRLINE STOCK NUMBER	NOMENCLATURE 1234567		EFF CODE	UNITS PER ASSY
-200E	D2549030703283		. . ELECTRICAL SYSTEM used on 001J SEE 25-41-51-26U FOR DET	NP		001
210A	D9250000000585		. . ELECTRICAL SYSTEM-COCKPIT DOOR LOCKING used on 001A, 001B, 001K SEE 25-41-51-31C FOR DET	NP		001
-210B	D9250000000285		. . ELECTRICAL SYSTEM-COCKPIT DOOR LOCKING used on 001C, 001D, 001E, 001F, 001G, 001H, 001J, 001L SEE 25-41-51-31B FOR DET	NP		001

- ITEM NOT ILLUSTRATED

THIS PAGE IS INTENTIONALLY LEFT BLANK

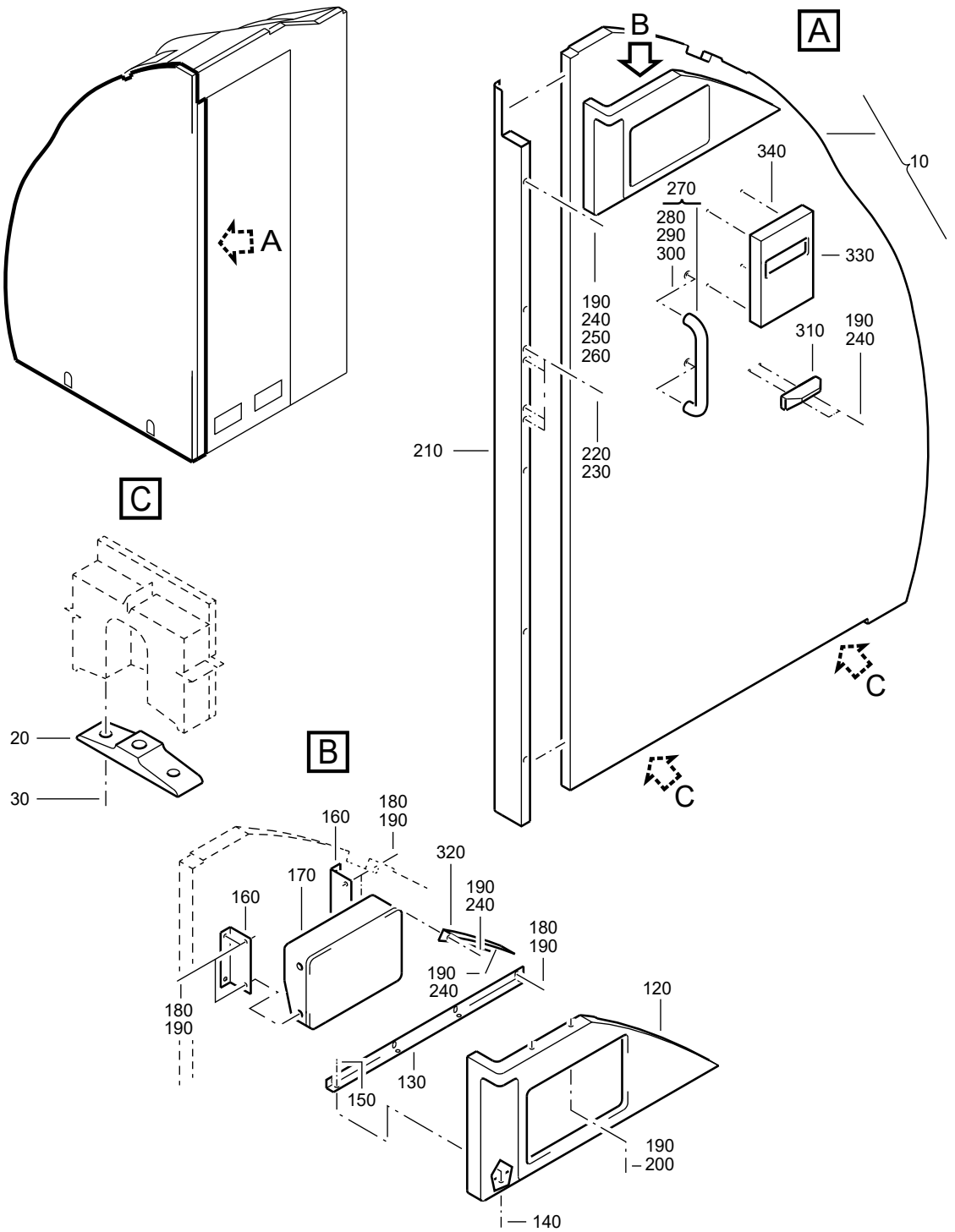

F_PL_254151_48_0_01_00

WALL-SIDE
Figure 48/EN254151SHEET48001

FIG. ITEM	PART NUMBER	AIRLINE STOCK NUMBER	NOMENCLATURE 1234567	EFF CODE	UNITS PER ASSY
48					
-001A	D2549020801465		. WALL-SIDE NP used on 040D (25415141V), 040E (25415141Y) SEE 25-41-51-41V FOR NHA SEE 25-41-51-41Y FOR NHA		RF
-001B	D2549030403665		. WALL-SIDE NP used on 040F (25415141W), 040F (25415141X) SEE 25-41-51-41W FOR NHA SEE 25-41-51-41X FOR NHA		RF
-001C	D2549020808665		. WALL-SIDE NP PRE VSB A2-254-25-042 PRE VSB A2-254-25-054 used on 040G (25415141W), 040G (25415141X), 040C (254151420) SEE 25-41-51-41W FOR NHA SEE 25-41-51-41X FOR NHA SEE 25-41-51-420 FOR NHA		RF
-001D	D2549010611265		. WALL-SIDE NP used on 040A (25415141X) SEE 25-41-51-41X FOR NHA		RF
-001E	D2549030401065		. WALL-SIDE NP used on 040J (25415141X), 040D (25415142E) SEE 25-41-51-41X FOR NHA SEE 25-41-51-42E FOR NHA		RF
-001F	D2549030400665		. WALL-SIDE NP used on 040B (25415141Z), 040H (25415142A) SEE 25-41-51-41Z FOR NHA SEE 25-41-51-42A FOR NHA		RF

- ITEM NOT ILLUSTRATED

FIG. ITEM	PART NUMBER	AIRLINE STOCK NUMBER	NOMENCLATURE 1234567		EFF CODE	UNITS PER ASSY
-001G	D2549010610865		. WALL-SIDE PRE VSB A2-254-25-080 used on 040K (25415141X) SEE 25-41-51-41X FOR NHA	NP		RF
-001H	D2549030404865		. WALL-SIDE used on 040E (25415141Z), 040E (25415142A) SEE 25-41-51-41Z FOR NHA SEE 25-41-51-42A FOR NHA	NP		RF
-001J	D2549010613265		. WALL-SIDE used on 040G (25415141Z) SEE 25-41-51-41Z FOR NHA	NP		RF
-001K	D2549020805865		. WALL-SIDE PRE VSB A2-254-25-042 used on 040D (254151420) SEE 25-41-51-420 FOR NHA	NP		RF
-001L	D2549010613065		. WALL-SIDE used on 040D (25415142C), 040H (25415142F) SEE 25-41-51-42C FOR NHA SEE 25-41-51-42F FOR NHA	NP		RF
-001M	R22540119600865		. WALL-SIDE PRE VSB A2-254-25-130 POST VSB A2-254-25-042 used on 040K (25415141W), 040L (25415141X), 040K (254151420) SEE 25-41-51-41W FOR NHA SEE 25-41-51-41X FOR NHA SEE 25-41-51-42 FOR NHA	NP		RF
-001N	R22540115200865		. WALL-SIDE POST VSB A2-254-25-042 used on 040L (254151420) SEE 25-41-51-42 FOR NHA	NP		RF

- ITEM NOT ILLUSTRATED

FIG. ITEM	PART NUMBER	AIRLINE STOCK NUMBER	NOMENCLATURE 1234567		EFF CODE	UNITS PER ASSY
-001P	R22540119604065		. WALL-SIDE POST VSB A2-254-25-054 used on 040M (25415141X) SEE 25-41-51-41X FOR NHA	NP		RF
-001Q	R22540114501065		. WALL-SIDE POST VSB A2-254-25-080 used on 040P (25415141X) SEE 25-41-51-41X FOR NHA	NP		RF
-001R	R22540119605465		. WALL-SIDE POST VSB A2-254-25-130 used on 040N (25415141W), 040Q (25415141X), 040P (254151420) SEE 25-41-51-41W FOR NHA SEE 25-41-51-41X FOR NHA SEE 25-41-51-420 FOR NHA	NP		RF
010A	A225401235-526		. . WALL ASSY-SIDE,AFT used on 001A			001
-010B	A225401235-520		. . WALL ASSY-SIDE,AFT used on 001B			001
-010C	A225401235-524		. . WALL ASSY-SIDE,AFT PRE VSB A2-254-25-130 used on 001C, 001H, 001M, 001P			001
-010D	A225401235-534		. . WALL ASSY-SIDE,AFT used on 001D			001
-010E	A225401235-540		. . WALL ASSY-SIDE,AFT used on 001E			001
-010F	A225401235-514		. . WALL ASSY-SIDE,AFT used on 001F			001
-010G	A225401235-544		. . WALL ASSY-SIDE,AFT used on 001G, 001Q			001

- ITEM NOT ILLUSTRATED

FIG. ITEM	PART NUMBER	AIRLINE STOCK NUMBER	NOMENCLATURE 1234567	EFF CODE	UNITS PER ASSY
-010H	A225401235-552		. . WALL ASSY-SIDE,AFT used on 001J		001
-010J	A225401235-602		. . WALL ASSY-SIDE,AFT used on 001K, 001N		001
-010K	A225401235-574		. . WALL ASSY-SIDE,AFT used on 001L		001
-010L	A225401235-598		. . WALL ASSY-SIDE,AFT POST VSB A2-254-25-130 used on 001R		001
020A	A225400232-208		. . . FITTING used on 010A, 010B, 010C, 010D, 010E, 010F, 010G, 010H, 010J, 010K, 010L		002
030A	ABS0704-6-50		. . . SCREW used on 010A, 010B, 010C, 010D, 010E, 010F, 010G, 010H, 010J, 010K, 010L		004
-040A	NAS1833C08-370		. . . INSERT used on 010A, 010B, 010C, 010D, 010E, 010F, 010G, 010H, 010J, 010K, 010L		083
-050A	NSA5054-08		. . . INSERT used on 010A, 010B, 010C, 010D, 010E, 010F, 010G, 010H, 010J, 010K, 010L		002
-060A	NAS1835C08		. . . INSERT used on 010A, 010B, 010C, 010D, 010E, 010F, 010G, 010H, 010J, 010K, 010L		009

- ITEM NOT ILLUSTRATED

FIG. ITEM	PART NUMBER	AIRLINE STOCK NUMBER	NOMENCLATURE 1234567	EFF CODE	UNITS PER ASSY
-070A	NAS1833C3-370		. . . INSERT used on 010A, 010B, 010C, 010D, 010E, 010F, 010G, 010H, 010J, 010K, 010L		020
-080A	NSA5054-5		. . . INSERT used on 010A, 010B, 010C, 010D, 010E, 010F, 010G, 010H, 010J, 010K, 010L		012
-090A	NSA5054-3		. . . INSERT used on 010A, 010B, 010C, 010D, 010E, 010F, 010G, 010H, 010J, 010K, 010L		003
-100A	NSA5054-4		. . . INSERT used on 010A, 010B, 010C, 010D, 010E, 010F, 010G, 010H, 010J, 010K, 010L		006
-110A	NSA935405-01		. . . MOUNT used on 010A, 010B, 010C, 010D, 010E, 010F, 010G, 010H, 010J, 010K, 010L		010
120A	A225401410-502		. . COVER-OXYGEN CONTAIN-ER ASSY PRE VSB A2-254-25-130 used on 001A, 001C, 001D, 001E, 001F, 001G, 001H, 001K, 001L, 001M, 001N, 001P, 001Q		001
-120B	A225401410-504		. . COVER-OXYGEN CONTAIN-ER ASSY used on 001B		001
-120C	A225401410-518		. . COVER-OXYGEN CONTAIN-ER ASSY POST VSB A2-254-25-130 used on 001J, 001R		001

- ITEM NOT ILLUSTRATED

FIG. ITEM	PART NUMBER	AIRLINE STOCK NUMBER	NOMENCLATURE 1234567	EFF CODE	UNITS PER ASSY
130A	A225400450-204		. . ANGLE used on 001A, 001B, 001C, 001D, 001E, 001F, 001G, 001H, 001J, 001K, 001L, 001M, 001N, 001P, 001Q, 001R		001
140A	NAS1102-08-5		. . SCREW used on 001A, 001B, 001C, 001D, 001E, 001F, 001G, 001H, 001J, 001K, 001L, 001M, 001N, 001P, 001Q, 001R		004
150A	NSA5067-08-1		. . NUT used on 001A, 001B, 001C, 001D, 001E, 001F, 001G, 001H, 001J, 001K, 001L, 001M, 001N, 001P, 001Q, 001R		004
160A	A225400450-202		. . ANGLE used on 001A, 001B, 001C, 001D, 001E, 001F, 001G, 001H, 001J, 001K, 001L, 001M, 001N, 001P, 001Q, 001R		002
170A	E2F212-85		. . CONTAINER ASSY-OXYGEN used on 001A		001
-170B	22C150150090004		. . CONTAINER ASSY-OXYGEN used on 001B		001
-170C	G2F212-85		. . CONTAINER ASSY-OXYGEN PRE VSB A2-254-25-042 PRE VSB A2-254-25-054 PRE VSB A2-254-25-098 used on 001C, 001E, 001F, 001K		001
-170D	22C150150320004		. . CONTAINER ASSY-OXYGEN PRE VSB A2-254-25-064 PRE VSB A2-254-25-080 used on 001D, 001G, 001H, 001L		001

- ITEM NOT ILLUSTRATED

FIG. ITEM	PART NUMBER	AIRLINE STOCK NUMBER	NOMENCLATURE 1234567	EFF CODE	UNITS PER ASSY
-170E	22C150150460004		. . CONTAINER ASSY-OXYGEN used on 001J		001
-170F	22G220150320400		. . CONTAINER ASSY-OXYGEN PRE VSB A2-254-25-130 POST VSB A2-254-25-042 POST VSB A2-254-25-064 used on 001H, 001M, 001N		001
-170G	22G150150320400		. . CONTAINER ASSY-OXYGEN POST VSB A2-254-25-054 POST VSB A2-254-25-080 POST VSB A2-254-25-098 used on 001C, 001P, 001Q		001
-170H	22G220150460400		. . CONTAINER ASSY-OXYGEN POST VSB A2-254-25-130 used on 001R		001
180A	NAS1096-2-5		. . SCREW BUY PN NAS1801-08-5 PRE VSB A2-254-25-054 PRE VSB A2-254-25-064 PRE VSB A2-254-25-080 PRE VSB A2-254-25-098 used on 001A, 001B, 001C, 001D, 001E, 001F, 001G, 001H, 001J, 001K, 001L		008
-180B	NAS1096-2-5		. . SCREW POST VSB A2-254-25-054 POST VSB A2-254-25-064 POST VSB A2-254-25-080 POST VSB A2-254-25-098 used on 001C, 001H, 001M, 001N, 001P, 001Q, 001R		004

- ITEM NOT ILLUSTRATED

FIG. ITEM	PART NUMBER	AIRLINE STOCK NUMBER	NOMENCLATURE 1234567	EFF CODE	UNITS PER ASSY
-185A	NAS1801-08-6		. . SCREW PRE VSB A2-254-25-130 POST VSB A2-254-25-054 POST VSB A2-254-25-064 POST VSB A2-254-25-080 POST VSB A2-254-25-098 used on 001C, 001H, 001M, 001N, 001P, 001Q		004
-185B	NAS1801-08-5		. . SCREW POST VSB A2-254-25-130 used on 001R		004
190A	NAS1149CN832R		. . WASHER used on 001A, 001B, 001C, 001D, 001E, 001F, 001G, 001H, 001J, 001K, 001L, 001P, 001Q		026
-190B	NAS1149CN832R		. . WASHER PRE VSB A2-254-25-130 used on 001M, 001N		022
-190C	NAS1149CN832R		. . WASHER POST VSB A2-254-25-130 used on 001R		020
-195A	AN960C8		. . WASHER used on 001M, 001N, 001R		004
200A	A225400451-202		. . STUD used on 001A, 001B, 001C, 001D, 001E, 001F, 001G, 001H, 001J, 001K, 001L, 001M, 001N, 001P, 001Q, 001R		002
210A	A225401222-502		. . POST ASSY PRE VSB A2-254-25-130 used on 001A, 001C, 001D, 001E, 001H, 001K, 001M, 001N, 001P		001

- ITEM NOT ILLUSTRATED

FIG. ITEM	PART NUMBER	AIRLINE STOCK NUMBER	NOMENCLATURE 1234567	EFF CODE	UNITS PER ASSY
-210B	A225401222-506		. . POST ASSY used on 001B		001
-210C	A225401222-550		. . POST ASSY used on 001F		001
-210D	A225401222-500		. . POST ASSY used on 001G, 001L, 001Q		001
-210E	A225401222-522		. . POST ASSY used on 001J		001
-210F	A225401222-568		. . POST ASSY POST VSB A2-254-25-130 used on 001R		001
220A	NAS514P832-4		. . . SCREW used on 210A, 210B, 210C, 210D, 210E, 210F		004
230A	NAS1068A08		. . . NUT BUY PN MS21075L08 used on 210A, 210B, 210C, 210D, 210E, 210F		004
240A	NAS1096-2-7		. . SCREW BUY PN NAS1801-08-7 PRE VSB A2-254-25-130 used on 001A, 001B, 001C, 001D, 001E, 001F, 001G, 001H, 001J, 001K, 001L, 001M, 001N, 001P, 001Q		016
-240B	NAS1096-2-7		. . SCREW BUY PN NAS1801-08-7 POST VSB A2-254-25-130 used on 001R		014

- ITEM NOT ILLUSTRATED

FIG. ITEM	PART NUMBER	AIRLINE STOCK NUMBER	NOMENCLATURE 1234567	EFF CODE	UNITS PER ASSY
250A	2634DP437-110		. . CAP used on 001A, 001B, 001C, 001D, 001E, 001F, 001G, 001H, 001J, 001K, 001L, 001M, 001N, 001P, 001Q, 001R		005
260A	NAS1096-3-9		. . SCREW BUY PN NAS1801-3-9 used on 001A, 001B, 001C, 001D, 001E, 001F, 001G, 001H, 001J, 001K, 001L, 001M, 001N, 001P, 001Q, 001R		001
270A	550MBB1		. . HANDLE ASSY PRE VSB A2-254-25-130 used on 001A, 001B, 001C, 001D, 001E, 001F, 001G, 001H, 001J, 001K, 001L, 001M, 001N, 001P, 001Q		001
-270B	A2-254-0011-04		. . HANDLE ASSY POST VSB A2-254-25-130 used on 001R		002
280A	S7224		. . . SCREW-SPECIAL used on 270A		001
290A	8534		. . . PIN-SECURITY used on 270A		001
300A	8587		. . . WASHER-SPECIAL used on 270A		001
-305A	A225400233-200		. . BUSHING POST VSB A2-254-25-130 used on 001R		003

- ITEM NOT ILLUSTRATED

FIG. ITEM	PART NUMBER	AIRLINE STOCK NUMBER	NOMENCLATURE 1234567	EFF CODE	UNITS PER ASSY
310A	A2547380206000		. . SUPPORT PRE VSB A2-254-25-130 used on 001A, 001C, 001D, 001E, 001F, 001G, 001H, 001K, 001L, 001M, 001N, 001P, 001Q A254-73802-060-00		001
-310B	A2547380208400		. . SUPPORT used on 001B		001
-310C	A2547380210200		. . SUPPORT used on 001J		001
320A	A225401236-200		. . ANGLE used on 001A, 001B, 001C, 001D, 001E, 001F, 001G, 001H, 001J, 001K, 001L, 001M, 001N, 001P, 001Q, 001R		001
330A	A2547577007000		. . DISPENSER-TOILET SEAT COVER used on 001B		001
-330B	A2547577004800		. . DISPENSER-TOILET SEAT COVER PRE VSB A2-254-25-130 used on 001C, 001D, 001E, 001F, 001G, 001H, 001K, 001L, 001M, 001N, 001P, 001Q A254-75770-048-00		001
-330C	A2547577008200		. . DISPENSER-TOILET SEAT COVER POST VSB A2-254-25-130 used on 001J, 001R A254-75770-082-00		001

- ITEM NOT ILLUSTRATED

FIG. ITEM	PART NUMBER	AIRLINE STOCK NUMBER	NOMENCLATURE 1234567	EFF CODE	UNITS PER ASSY
340A	NAS1100-08-4		. . SCREW used on 001B, 001C, 001D, 001E, 001F, 001G, 001H, 001J, 001K, 001L, 001M, 001N, 001P, 001Q, 001R		002
-350A	A225400216-314		. . STRIP-KICK POST VSB A2-254-25-130 used on 001R		001

- ITEM NOT ILLUSTRATED

THIS PAGE IS INTENTIONALLY LEFT BLANK

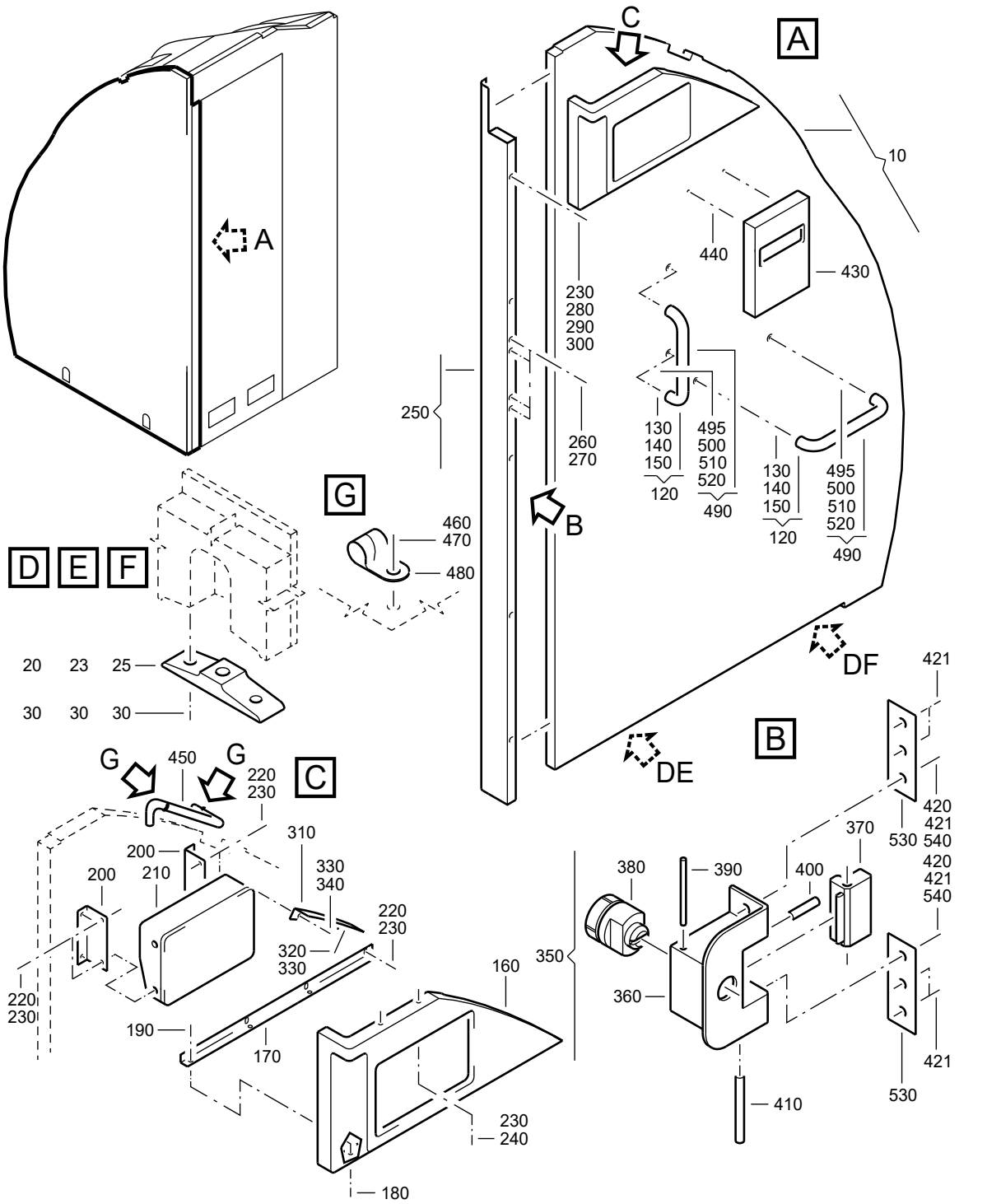

F_PL_254151_48_A_01_00

WALL-SIDE
Figure 48A/EN254151SHEET48A01

FIG. ITEM	PART NUMBER	AIRLINE STOCK NUMBER	NOMENCLATURE 1234567		EFF CODE	UNITS PER ASSY
48A						
-001A	D2549030606065		. WALL-SIDE PRE VSB A2-254-25-045 used on 040K (25415141H), 040A (25415141J) SEE 25-41-51-41H FOR NHA SEE 25-41-51-41J FOR NHA	NP		RF
-001B	D2549040500265		. WALL-SIDE used on 040D (25415142B) SEE 25-41-51-42B FOR NHA	NP		RF
-001C	D2549040500465		. WALL-SIDE PRE VSB A2-254-25-045 used on 040E (25415142H), 040D (25415142M), 040F (25415142R) SEE 25-41-51-42H FOR NHA SEE 25-41-51-42M FOR NHA SEE 25-41-51-42R FOR NHA	NP		RF
-001D	D2549040500865		. WALL-SIDE PRE VSB A2-254-25-080 used on 040J (25415142H), 040G (25415142Q) SEE 25-41-51-42H FOR NHA SEE 25-41-51-42Q FOR NHA	NP		RF
-001E	D2549030410865		. WALL-SIDE used on 040H (25415142K), 040L (25415142L), 040C(25415142R), 040G (25415142T) SEE 25-41-51-42K FOR NHA SEE 25-41-51-42L FOR NHA SEE 25-41-51-42R FOR NHA SEE 25-41-51-42T FOR NHA	NP		RF

- ITEM NOT ILLUSTRATED

FIG. ITEM	PART NUMBER	AIRLINE STOCK NUMBER	NOMENCLATURE 1234567		EFF CODE	UNITS PER ASSY
-001F	D2549040501065		. WALL-SIDE PRE VSB A2-254-25-080 used on 040J (25415142K) SEE 25-41-51-42K FOR NHA	NP		RF
-001G	D2549010405265		. WALL-SIDE used on 040D (25415142Q) SEE 25-41-51-42Q FOR NHA	NP		RF
-001H	D2549030700865		. WALL-SIDE used on 040E (25415142Q), 040E (25415142U) SEE 25-41-51-42Q FOR NHA SEE 25-41-51-42U FOR NHA	NP		RF
-001J	D2549020411265		. WALL-SIDE used on 040H (25415142Q) SEE 25-41-51-42Q FOR NHA	NP		RF
-001K	D2549020412265		. WALL-SIDE used on 040A (25415142R) SEE 25-41-51-42R FOR NHA	NP		RF
-001L	D2549020412065		. WALL-SIDE used on 040E (25415142R) SEE 25-41-51-42R FOR NHA	NP		RF
-001M	D2549030701865		. WALL-SIDE PRE VSB A2-254-25-044 used on 040G (25415142R), 040M (25415142S) SEE 25-41-51-42R FOR NHA SEE 25-41-51-42S FOR NHA	NP		RF
-001N	D2549020800065		. WALL-SIDE PRE VSB A2-254-25-032 used on 040N (25415141R) SEE 25-41-51-41R FOR NHA	NP		RF

- ITEM NOT ILLUSTRATED

FIG. ITEM	PART NUMBER	AIRLINE STOCK NUMBER	NOMENCLATURE 1234567		EFF CODE	UNITS PER ASSY
-001P	R22540180800065		. WALL-SIDE POST VSB A2-254-25-044 used on 040N (25415142R), 040N (25415142S) SEE 25-41-51-42R FOR NHA SEE 25-41-51-42S FOR NHA	NP		RF
-001Q	D2549020800065		. WALL-SIDE POST VSB A2-254-25-032 used on 040R (25415141R) SEE 25-41-51-41R FOR NHA	NP		RF
-001R	R22540167300265		. WALL-SIDE POST VSB A2-254-25-080 used on 040M (25415142H), 040M (25415142Q) SEE 25-41-51-42H FOR NHA SEE 25-41-51-42Q FOR NHA	NP		RF
-001S	R22540167300465		. WALL-SIDE POST VSB A2-254-25-080 used on 040Q (25415142K) SEE 25-41-51-42K FOR NHA	NP		RF
-001T	R22540119900265		. WALL-SIDE POST VSB A2-254-25-045 used on 040S (25415141H), 040Q (25415141J) SEE 25-41-51-41H FOR NHA SEE 25-41-51-41J FOR NHA	NP		RF
-001U	R22540161102065		. WALL-SIDE POST VSB A2-254-25-045 used on 040Q (25415142R) SEE 25-41-51-42R FOR NHA	NP		RF
010A	A225491231-594		. . WALL ASSY-SIDE,AFT POST SB 25-1287 used on 001A, 001T			001

- ITEM NOT ILLUSTRATED

FIG. ITEM	PART NUMBER	AIRLINE STOCK NUMBER	NOMENCLATURE 1234567	EFF CODE	UNITS PER ASSY
-010B	A225401234-600		. . WALL ASSY-SIDE,AFT used on 001B		001
-010C	A225401234-612		. . WALL ASSY-SIDE,AFT used on 001C, 001U		001
-010D	A225401234-614		. . WALL ASSY-SIDE,AFT used on 001D, 001F, 001R, 001S		001
-010E	A225401234-616		. . WALL ASSY-SIDE,AFT used on 001E		001
-010F	A225401234-632		. . WALL ASSY-SIDE,AFT used on 001J		001
-010G	A225401234-628		. . WALL ASSY-SIDE,AFT used on 001G		001
-010H	A225401234-630		. . WALL ASSY-SIDE,AFT used on 001H		001
-010J	A225401234-636		. . WALL ASSY-SIDE,AFT used on 001K		001
-010K	A225401234-638		. . WALL ASSY-SIDE,AFT used on 001L		001
-010L	A225401234-640		. . WALL ASSY-SIDE,AFT used on 001M, 001P		001
-010M	A2254012348560		. . WALL ASSY-SIDE,AFT POST SB 25-1314 used on 001N, 001Q		001
020A	A225400232-208		. . . FITTING used on 010A, 010M		002
023A	A225400232-208		. . . FITTING used on 010B, 010C, 010D, 010E, 010F, 010G, 010H, 010J, 010K		001

- ITEM NOT ILLUSTRATED

FIG. ITEM	PART NUMBER	AIRLINE STOCK NUMBER	NOMENCLATURE 1234567	EFF CODE	UNITS PER ASSY
025A	A225400232-216		. . . FITTING used on 010B, 010C, 010D, 010E, 010F, 010G, 010H, 010J, 010K, 010L		001
030A	ABS0704-6-50		. . . SCREW used on 010A, 010B, 010C, 010D, 010E, 010F, 010G, 010H, 010J, 010K, 010L, 010M		004
-040A	NAS1833C08-370		. . . INSERT used on 010A, 010B, 010C, 010D, 010E, 010F, 010G, 010H, 010J, 010K, 010L, 010M		083
-050A	NSA5054-08		. . . INSERT used on 010A, 010B, 010C, 010D, 010E, 010F, 010G, 010H, 010J, 010K, 010L, 010M		002
-060A	NAS1835C08		. . . INSERT used on 010A, 010B, 010C, 010D, 010E, 010F, 010G, 010H, 010J, 010K, 010L, 010M		008
-070A	NAS1833C3-370		. . . INSERT used on 010A, 010B, 010C, 010D, 010E, 010F, 010G, 010H, 010J, 010K, 010L, 010M		022
-080A	NSA5054-5		. . . INSERT used on 010A, 010B, 010C, 010D, 010E, 010F, 010G, 010H, 010J, 010K, 010L, 010M		016
-090A	NSA5054-3		. . . INSERT used on 010A, 010B, 010C, 010D, 010E, 010F, 010G, 010H, 010J, 010K, 010L, 010M		001

- ITEM NOT ILLUSTRATED

FIG. ITEM	PART NUMBER	AIRLINE STOCK NUMBER	NOMENCLATURE 1234567	EFF CODE	UNITS PER ASSY
-100A	NSA5054-4		. . . INSERT used on 010A, 010B, 010C, 010D, 010E, 010F, 010G, 010H, 010J, 010K, 010L, 010M		006
-110A	NSA935405-01		. . . MOUNT used on 010A, 010B, 010C, 010D, 010E, 010F, 010G, 010H, 010J, 010K, 010L, 010M		010
120A	550-33-300MBB		. . HANDLE ASSY used on 001A, 001B, 001C, 001D, 001E, 001F, 001G, 001H, 001K, 001L, 001M, 001N, 001P, 001Q, 001R, 001S, 001T, 001U		002
130A	S7224		. . . SCREW-SPECIAL used on 120A		002
140A	8534		. . . PIN-SECURITY used on 120A		002
150A	8587		. . . WASHER-SPECIAL used on 120A		002
160A	A225401410-502		. . COVER-OXYGEN CONTAIN-ER ASSY used on 001A, 001B, 001C, 001D, 001F, 001G, 001H, 001L, 001N, 001Q, 001R, 001S, 001T, 001U		001
-160B	A225401410-520		. . COVER-OXYGEN CONTAIN-ER ASSY used on 001E		001
-160C	A225401410-524		. . COVER-OXYGEN CONTAIN-ER ASSY used on 001J		001

- ITEM NOT ILLUSTRATED

FIG. ITEM	PART NUMBER	AIRLINE STOCK NUMBER	NOMENCLATURE 1234567	EFF CODE	UNITS PER ASSY
-160D	A225401410-518		. . COVER-OXYGEN CONTAIN-ER ASSY used on 001K, 001M, 001P		001
170A	A225400450-204		. . ANGLE used on 001A, 001B, 001C, 001D, 001E, 001F, 001G, 001H, 001J, 001K, 001L, 001M, 001N, 001P, 001Q, 001R, 001S, 001T, 001U		001
180A	NAS1102-08-5		. . SCREW used on 001A, 001B, 001C, 001D, 001E, 001F, 001G, 001H, 001J, 001K, 001L, 001M, 001N, 001P, 001Q, 001R, 001S, 001T, 001U		004
190A	NSA5067-08-1		. . NUT used on 001A, 001B, 001C, 001D, 001E, 001F, 001G, 001H, 001J, 001K, 001L, 001M, 001N, 001P, 001Q, 001R, 001S, 001T, 001U		004
200A	A225400450-202		. . ANGLE used on 001A, 001B, 001C, 001D, 001E, 001F, 001G, 001H, 001J, 001K, 001L, 001M, 001N, 001P, 001Q, 001R, 001S, 001T, 001U		002
210A	G2F212-85		. . CONTAINER ASSY-OXYGEN PRE VSB A2-254-25-045 used on 001A, 001B, 001C, 001G, 001N, 001Q		001
-210B	22C150150320004		. . CONTAINER ASSY-OXYGEN PRE VSB A2-254-25-080 used on 001D, 001F, 001L		001

- ITEM NOT ILLUSTRATED

FIG. ITEM	PART NUMBER	AIRLINE STOCK NUMBER	NOMENCLATURE 1234567	EFF CODE	UNITS PER ASSY
-210C	G2F212-09		. . CONTAINER ASSY-OXYGEN used on 001E		001
-210D	44A2F21-285		. . CONTAINER ASSY-OXYGEN used on 001H		001
-210E	G2F212A1		. . CONTAINER ASSY-OXYGEN used on 001J		001
-210F	G2F212-77		. . CONTAINER ASSY-OXYGEN PRE VSB A2-254-25-044 used on 001K, 001M		001
-210G	22G150150460400		. . CONTAINER ASSY-OXYGEN POST VSB A2-254-25-044 used on 001P		001
-210H	22G150150320400		. . CONTAINER ASSY-OXYGEN POST VSB A2-254-25-045 POST VSB A2-254-25-080 used on 001R, 001S, 001T, 001U		001
220A	NAS1096-2-5		. . SCREW PRE VSB A2-254-25-044 PRE VSB A2-254-25-045 PRE VSB A2-254-25-080 BUY PN NAS1801-08-5 used on 001A, 001B, 001C, 001D, 001E, 001F, 001G, 001H, 001J, 001K, 001L, 001M, 001N, 001Q		008
-220B	NAS1096-2-5		. . SCREW POST VSB A2-254-25-044 POST VSB A2-254-25-045 POST VSB A2-254-25-080 BUY PN NAS1801-08-5 used on 001P, 001R, 001S, 001T, 001U		004

- ITEM NOT ILLUSTRATED

FIG. ITEM	PART NUMBER	AIRLINE STOCK NUMBER	NOMENCLATURE 1234567	EFF CODE	UNITS PER ASSY
-225A	NAS1801-08-6		. . SCREW POST VSB A2-254-25-044 POST VSB A2-254-25-045 POST VSB A2-254-25-080 used on 001P, 001R, 001S, 001T, 001U		004
230A	NAS1149CN832R		. . WASHER PRE VSB A2-254-25-044 used on 001A, 001B, 001C, 001D, 001E, 001F, 001G, 001H, 001J, 001K, 001L, 001M, 001N, 001Q, 001R, 001S, 001T, 001U		015
-230B	NAS1149CN832R		. . WASHER POST VSB A2-254-25-044 used on 001P		011
-235A	AN960C8		. . WASHER POST VSB A2-254-25-044 used on 001P		004
240A	A225400451-202		. . STUD used on 001A, 001B, 001C, 001D, 001E, 001F, 001G, 001H, 001J, 001K, 001L, 001M, 001N, 001P, 001Q, 001R, 001S, 001T, 001U		002
250A	A225401222-502		. . POST ASSY used on 001A, 001B, 001T		001
-250B	A225401222-600		. . POST ASSY used on 001C, 001G, 001U		001
-250C	A225401222-604		. . POST ASSY used on 001D, 001F, 001H, 001R, 001S		001
-250D	A225401222-622		. . POST ASSY used on 001E		001

- ITEM NOT ILLUSTRATED

FIG. ITEM	PART NUMBER	AIRLINE STOCK NUMBER	NOMENCLATURE 1234567	EFF CODE	UNITS PER ASSY
-250E	A225401222-638		. . POST ASSY used on 001J		001
-250F	A225401222-612		. . POST ASSY used on 001K		001
-250G	A225401222-626		. . POST ASSY used on 001L		001
-250H	A225401222-640		. . POST ASSY used on 001M, 001P		001
-250J	A225401222-500		. . POST ASSY used on 001N, 001Q		001
260A	NAS514P832-4		. . . SCREW used on 250A, 250B, 250C, 250D, 250E, 250F, 250G,250H, 250J		004
270A	NAS1068A08		. . . NUT BUY PN MS21075L08 used on 250A, 250B, 250C, 250D, 250E, 250F, 250G,250H, 250J		004
280A	NAS1096-2-7		. . SCREW BUY PN NAS1801-08-7 used on 001A, 001B, 001C, 001D, 001E, 001F, 001G, 001H, 001J, 001K, 001L, 001M, 001N, 001P, 001Q, 001R, 001S, 001T, 001U		005
290A	2634DP437-110		. . CAP used on 001A, 001B, 001C, 001D, 001E, 001F, 001G, 001H, 001J, 001K, 001L, 001M, 001N, 001P, 001Q, 001R, 001S, 001T, 001U		005

- ITEM NOT ILLUSTRATED

FIG. ITEM	PART NUMBER	AIRLINE STOCK NUMBER	NOMENCLATURE 1234567	EFF CODE	UNITS PER ASSY
300A	NAS1096-3-9		. . SCREW BUY PN NAS1801-3-9 used on 001A, 001B, 001C, 001D, 001E, 001F, 001G, 001H, 001J, 001K, 001L, 001M, 001N, 001P, 001Q, 001R, 001S, 001T, 001U		001
310A	A225401236-200		. . ANGLE POST SB 25-1287 used on 001A, 001B, 001C, 001D, 001E, 001F, 001G, 001H, 001J, 001K, 001L, 001M, 001N, 001P, 001Q, 001R, 001S, 001T, 001U		001
320A	NAS1096-3-5		. . SCREW POST SB 25-1287 BUY PN NAS1801-3-5 used on 001A, 001B, 001C, 001D, 001E, 001F, 001G, 001H, 001J, 001K, 001L, 001M, 001N, 001P, 001Q, 001R, 001S, 001T, 001U		005
330A	NAS1149C0332R		. . WASHER POST SB 25-1287 used on 001A, 001B, 001C, 001D, 001E, 001F, 001G, 001H, 001J, 001K, 001L, 001M, 001N, 001P, 001Q, 001R, 001S, 001T, 001U		009

- ITEM NOT ILLUSTRATED

FIG. ITEM	PART NUMBER	AIRLINE STOCK NUMBER	NOMENCLATURE 1234567	EFF CODE	UNITS PER ASSY
340A	NAS1096-3-7		. . SCREW POST SB 25-1287 BUY PN NAS1801-3-7 used on 001A, 001B, 001C, 001D, 001E, 001F, 001G, 001H, 001J, 001K, 001L, 001M, 001N, 001P, 001Q, 001R, 001S, 001T, 001U		004
350A	A225400208-000		. . DEVICE ASSY-EMERGENCY UNLOCKING,SINGLE DOOR used on 001B, 001C, 001D, 001E, 001F, 001G, 001H, 001J, 001K, 001L, 001M, 001N, 001P, 001Q, 001R, 001S, 001U		001
360A	A225400208-200		. . . HOUSING-EMERGENCY UN-LOCKING DEVICE used on 350A		001
370A	A225400208-204		. . . STRIKE-EMERGENCY UN-LOCKING DEVICE used on 350A		001
380A	A225400208-202		. . . PIVOT-EMERGENCY UN-LOCKING DEVICE used on 350A		001
390A	A225400208-210		. . . PIN used on 350A		001
400A	SM1275-1KNM04		. . . CATCH-SNAP used on 350A		001
410A	A225400208-208		. . . BOLT used on 350A		001

- ITEM NOT ILLUSTRATED

FIG. ITEM	PART NUMBER	AIRLINE STOCK NUMBER	NOMENCLATURE 1234567	EFF CODE	UNITS PER ASSY
420A	NAS514P832-7		. . SCREW used on 001B, 001C, 001D, 001E, 001F, 001G, 001H, 001J, 001K, 001L, 001M, 001P, 001R, 001S, 001U		002
421A	NAS514P832-7		. . SCREW POST SB 25-1316 used on 001N, 001Q		006
430A	A2547577004800		. . DISPENSER-TOILET SEAT COVER used on 001D, 001F, 001G, 001H, 001L, 001R, 001S A254-75770-048-00		001
-430B	A2547577008200		. . DISPENSER-TOILET SEAT COVER used on 001K, 001M, 001P		001
440A	NAS1100-08-4		. . SCREW used on 001D, 001F, 001G, 001H, 001K, 001L, 001M, 001P, 001R, 001S		002
450A	4421054-0D0		. . HOSE used on 001H		001
460A	NAS1096-2-10		. . SCREW BUY PN NAS1801-08-10 used on 001H		002
470A	NAS1149C0332R		. . WASHER used on 001H		002
480A	MS21919WCH8		. . CLAMP BUY PN AS21919WCH08 used on 001H		002
490A	A425400488-064		. . HANDLE ASSY used on 001J		002

- ITEM NOT ILLUSTRATED

FIG. ITEM	PART NUMBER	AIRLINE STOCK NUMBER	NOMENCLATURE 1234567	EFF CODE	UNITS PER ASSY
495A	A425400488-262		. . . HANDLE used on 490A		001
500A	33767		. . . SCREW used on 490A		002
510A	33723		. . . WASHER used on 490A		002
520A	500845		. . . SETSCREW used on 490A		002
530A	A225400221-202		. . PLATE POST SB 25-1316 used on 001N, 001Q		002
540A	NSA5067-08-1		. . NUT POST SB 25-1316 used on 001N, 001Q		002
-550A	A225400216-314		. . STRIP-KICK POST VSB A2-254-25-032 used on 001Q		001

- ITEM NOT ILLUSTRATED

THIS PAGE IS INTENTIONALLY LEFT BLANK

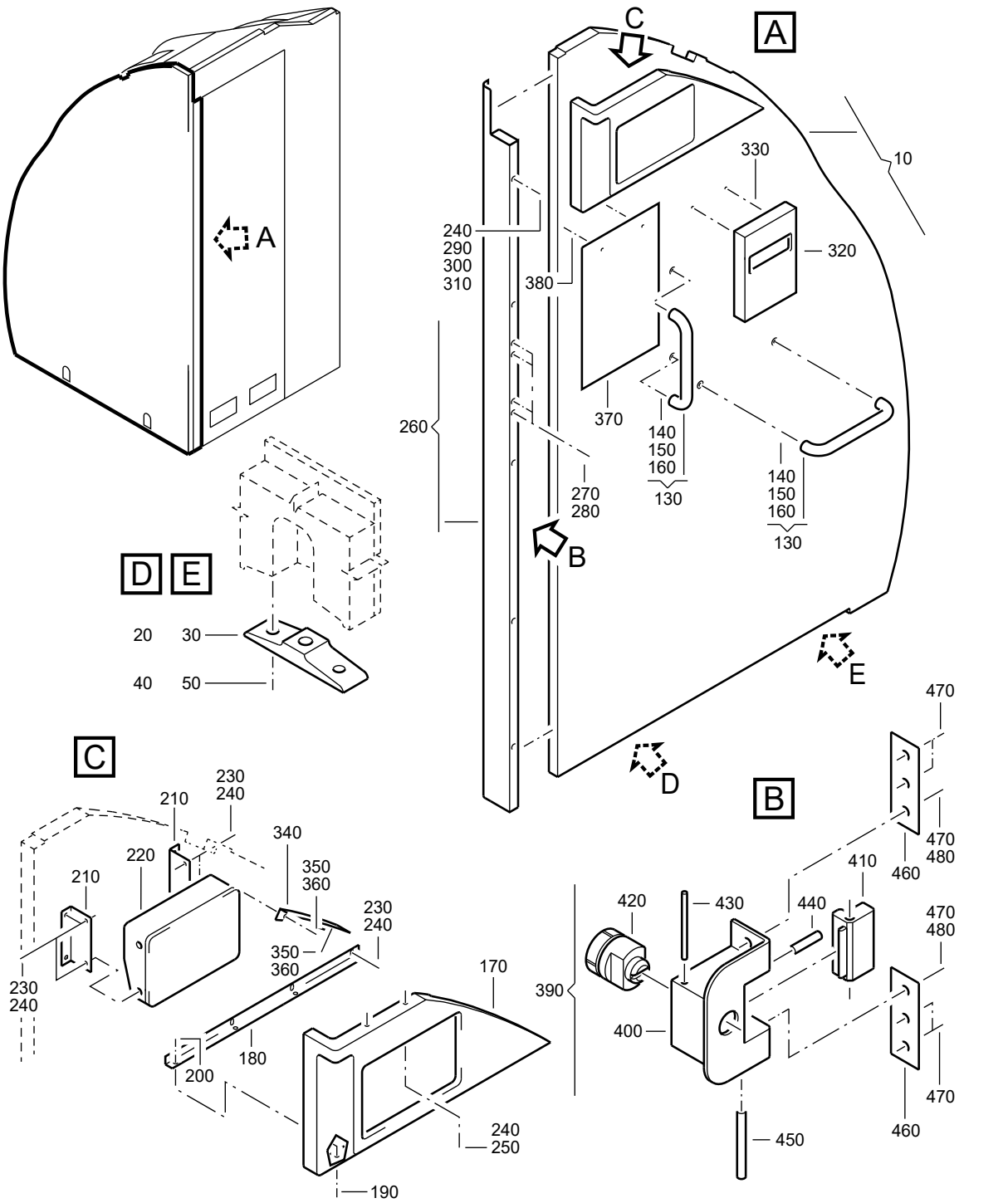

F_PL_254151_48_B_01_00

WALL-SIDE
Figure 48B/EN254151SHEET48B01

FIG. ITEM	PART NUMBER	AIRLINE STOCK NUMBER	NOMENCLATURE 1234567	EFF CODE	UNITS PER ASSY
48B					
-001A	D2549010612465		. WALL-SIDE NP used on 040A (25415141Z), 040F (25415142A) SEE 25-41-51-41Z FOR NHA SEE 25-41-51-42A FOR NHA		RF
-001B	D2549020806865		. WALL-SIDE NP used on 040C (25415141Z), 040C (25415142C) SEE 25-41-51-41Z FOR NHA SEE 25-41-51-42C FOR NHA		RF
-001C	D2549020811665		. WALL-SIDE NP used on 040F (25415141Z), 040E (25415142B), 040H(25415142C), 040B (25415142F) SEE 25-41-51-41Z FOR NHA SEE 25-41-51-42B FOR NHA SEE 25-41-51-42C FOR NHA SEE 25-41-51-42F FOR NHA		RF
-001D	D2549020812065		. WALL-SIDE NP used on 040A (25415142A), 040A (25415142C), 040E(25415142F) SEE 25-41-51-42A FOR NHA SEE 25-41-51-42C FOR NHA SEE 25-41-51-42F FOR NHA		RF
-001E	D2549020812865		. WALL-SIDE NP used on 040C (25415142B) SEE 25-41-51-42B FOR NHA		RF
-001F	D2549030614065		. WALL-SIDE NP used on 040H (25415142B) SEE 25-41-51-42B FOR NHA		RF
-001G	D2549010611465		. WALL-SIDE NP used on 040E (254151420) SEE 25-41-51-420 FOR NHA		RF

- ITEM NOT ILLUSTRATED

FIG. ITEM	PART NUMBER	AIRLINE STOCK NUMBER	NOMENCLATURE 1234567		EFF CODE	UNITS PER ASSY
-001H	D2549020813065		. WALL-SIDE used on 040L (25415142B), 040F (25415142F) SEE 25-41-51-42B FOR NHA SEE 25-41-51-42F FOR NHA	NP		RF
-001J	D2549030408065		. WALL-SIDE PRE VSB A2-254-25-106 used on 040E (25415142C), 040E (25415142G) SEE 25-41-51-42C FOR NHA SEE 25-41-51-42G FOR NHA	NP		RF
-001K	D2549020801865		. WALL-SIDE used on 040F (25415142C) SEE 25-41-51-42C FOR NHA	NP		RF
-001L	D2549020813465		. WALL-SIDE used on 040G (25415142C) SEE 25-41-51-42C FOR NHA	NP		RF
-001M	D2549030406065		. WALL-SIDE used on 040J (25415142C) SEE 25-41-51-42C FOR NHA	NP		RF
-001N	D2549020513865		. WALL-SIDE used on 040C (25415142F) SEE 25-41-51-42F FOR NHA	NP		RF
-001P	R22540166200065		. WALL-SIDE POST VSB A2-254-25-106 used on 040M (25415142C), 040Q (25415142G) SEE 25-41-51-42C FOR NHA SEE 25-41-51-42G FOR NHA	NP		RF
010A	A225401235-500		. . WALL ASSY-SIDE,AFT used on 001A			001
-010B	A225401235-532		. . WALL ASSY-SIDE,AFT used on 001B			001

- ITEM NOT ILLUSTRATED

FIG. ITEM	PART NUMBER	AIRLINE STOCK NUMBER	NOMENCLATURE 1234567	EFF CODE	UNITS PER ASSY
-010C	A225401235-550		. . WALL ASSY-SIDE,AFT used on 001C		001
-010D	A225401235-554		. . WALL ASSY-SIDE,AFT PRE VSB A2-254-25-106 used on 001D, 001J		001
-010E	A225401235-564		. . WALL ASSY-SIDE,AFT used on 001E		001
-010F	A225401235-558		. . WALL ASSY-SIDE,AFT used on 001F		001
-010G	A225401235-560		. . WALL ASSY-SIDE,AFT used on 001G		001
-010H	A225401235-570		. . WALL ASSY-SIDE,AFT used on 001H		001
-010J	A225401235-568		. . WALL ASSY-SIDE,AFT used on 001K, 001N		001
-010K	A225401235-562		. . WALL ASSY-SIDE,AFT used on 001L		001
-010L	A225401235-566		. . WALL ASSY-SIDE,AFT used on 001M		001
-010M	A225401235-750		. . WALL ASSY-SIDE,AFT POST VSB A2-254-25-106 used on 001P		001
020A	A225400232-208		. . . FITTING used on 010A, 010B, 010C, 010D, 010E, 010F, 010G, 010H, 010J, 010K, 010L, 010M		001
030A	A225400232-216		. . . FITTING used on 010A, 010B, 010C, 010D, 010E, 010F, 010G, 010H, 010J, 010K, 010L, 010M		001

- ITEM NOT ILLUSTRATED

FIG. ITEM	PART NUMBER	AIRLINE STOCK NUMBER	NOMENCLATURE 1234567	EFF CODE	UNITS PER ASSY
040A	ABS0704-6-50		. . . SCREW used on 010A, 010B, 010C, 010D, 010E, 010F, 010G, 010H, 010J, 010K, 010L, 010M		002
050A	ABS0705-6-50		. . . SCREW used on 010A, 010B, 010C, 010D, 010E, 010F, 010G, 010H, 010J, 010K, 010L, 010M		002
-060A	NAS1833C08-370		. . . INSERT used on 010A, 010B, 010C, 010D, 010E, 010F, 010G, 010H, 010J, 010K, 010L, 010M		083
-070A	NSA5054-08		. . . INSERT used on 010A, 010B, 010C, 010D, 010E, 010F, 010G, 010H, 010J, 010K, 010L, 010M		002
-080A	NAS1835C08		. . . INSERT used on 010A, 010B, 010C, 010D, 010E, 010F, 010G, 010H, 010J, 010K, 010L, 010M		009
-090A	NAS1833C3-370		. . . INSERT used on 010A, 010B, 010C, 010D, 010E, 010F, 010G, 010H, 010J, 010K, 010L, 010M		020
-100A	NSA5054-5		. . . INSERT used on 010A, 010B, 010C, 010D, 010E, 010F, 010G, 010H, 010J, 010K, 010L, 010M		012
-110A	NSA5054-3		. . . INSERT used on 010A, 010B, 010C, 010D, 010E, 010F, 010G, 010H, 010J, 010K, 010L, 010M		003

- ITEM NOT ILLUSTRATED

FIG. ITEM	PART NUMBER	AIRLINE STOCK NUMBER	NOMENCLATURE 1234567	EFF CODE	UNITS PER ASSY
-120A	NSA5054-4		. . . INSERT used on 010A, 010B, 010C, 010D, 010E, 010F, 010G, 010H, 010J, 010K, 010L, 010M		006
-125A	NSA935405-01		. . . MOUNT used on 010A, 010B, 010C, 010D, 010E, 010F, 010G, 010H, 010J, 010K, 010L, 010M		010
130A	550-33-300MBB		. . HANDLE ASSY used on 001A, 001B, 001C, 001D, 001E, 001F, 001G, 001H, 001J, 001K, 001L, 001M, 001N, 001P		002
140A	S7224		. . . SCREW-SPECIAL used on 130A		002
150A	8534		. . . PIN-SECURITY used on 130A		002
160A	8587		. . . WASHER-SPECIAL used on 130A		002
170A	A225401410-502		. . COVER-OXYGEN CONTAIN-ER ASSY PRE VSB A2-254-25-106 used on 001A, 001B, 001C, 001D, 001E, 001F, 001H, 001J, 001K, 001L, 001M, 001N		001
-170B	A225401410-508		. . COVER-OXYGEN CONTAIN-ER ASSY used on 001G		001
-170C	A225401410-534		. . COVER-OXYGEN CONTAIN-ER ASSY POST VSB A2-254-25-106 used on 001P		001

- ITEM NOT ILLUSTRATED

FIG. ITEM	PART NUMBER	AIRLINE STOCK NUMBER	NOMENCLATURE 1234567	EFF CODE	UNITS PER ASSY
180A	A225400450-204		. . ANGLE used on 001A, 001B, 001C, 001D, 001E, 001F, 001G, 001H, 001J, 001K, 001L, 001M, 001N, 001P		001
190A	NAS1102-08-5		. . SCREW used on 001A, 001B, 001C, 001D, 001E, 001F, 001G, 001H, 001J, 001K, 001L, 001M, 001N, 001P		004
200A	NSA5067-08-1		. . NUT used on 001A, 001B, 001C, 001D, 001E, 001F, 001G, 001H, 001J, 001K, 001L, 001M, 001N, 001P		004
210A	A225400450-202		. . ANGLE used on 001A, 001B, 001C, 001D, 001E, 001F, 001G, 001H, 001J, 001K, 001L, 001M, 001N, 001P		002
220A	22C150150320004		. . CONTAINER ASSY-OXYGEN used on 001A, 001B, 001C, 001E, 001F, 001L		001
-220B	G2F212-85		. . CONTAINER ASSY-OXYGEN used on 001D, 001H, 001K, 001M, 001N		001
-220C	G2F212-18		. . CONTAINER ASSY-OXYGEN used on 001G		001
-220D	22C220150320004		. . CONTAINER ASSY-OXYGEN used on 001J, 001P		001

- ITEM NOT ILLUSTRATED

FIG. ITEM	PART NUMBER	AIRLINE STOCK NUMBER	NOMENCLATURE 1234567	EFF CODE	UNITS PER ASSY
230A	NAS1096-2-5		. . SCREW BUY PN NAS1801-08-5 used on 001A, 001B, 001C, 001D, 001E, 001F, 001G, 001H, 001J, 001K, 001L, 001M, 001N, 001P		008
240A	NAS1149CN832R		. . WASHER used on 001A, 001B, 001C, 001D, 001E, 001F, 001G, 001H, 001J, 001K, 001L, 001M, 001N, 001P		015
250A	A225400451-202		. . STUD used on 001A, 001B, 001C, 001D, 001E, 001F, 001G, 001H, 001J, 001K, 001L, 001M, 001N, 001P		002
260A	A225401222-500		. . POST ASSY used on 001A, 001E, 001F, 001H, 001M		001
-260B	A225401222-534		. . POST ASSY used on 001B		001
-260C	A225401222-554		. . POST ASSY used on 001C		001
-260D	A225401222-502		. . POST ASSY PRE VSB A2-254-25-106 used on 001D, 001G, 001J		001
-260E	A225401222-558		. . POST ASSY used on 001K, 001N		001
-260F	A225401222-556		. . POST ASSY used on 001L		001

- ITEM NOT ILLUSTRATED

FIG. ITEM	PART NUMBER	AIRLINE STOCK NUMBER	NOMENCLATURE 1234567	EFF CODE	UNITS PER ASSY
-260G	A225401222-902		. . POST ASSY POST VSB A2-254-25-106 used on 001P		001
270A	NAS514P832-4		. . . SCREW used on 260A, 260B, 260C, 260D, 260E, 260F, 260G		004
280A	NAS1068A08		. . . NUT BUY PN MS21075L08 used on 260A, 260B, 260C, 260D, 260E, 260F, 260G		004
290A	NAS1096-2-7		. . SCREW BUY PN NAS1801-08-7 used on 001A, 001B, 001C, 001D, 001E, 001F, 001G, 001H, 001J, 001K, 001L, 001M, 001N, 001P		005
300A	2634DP437-110		. . CAP used on 001A, 001B, 001C, 001D, 001E, 001F, 001G, 001H, 001J, 001K, 001L, 001M, 001N, 001P		005
310A	NAS1096-3-9		. . SCREW BUY PN NAS1801-3-9 used on 001A, 001B, 001C, 001D, 001E, 001F, 001G, 001H, 001J, 001K, 001L, 001M, 001N, 001P		001
320A	A2547577004800		. . DISPENSER-TOILET SEAT COVER PRE VSB A2-254-25-106 used on 001A, 001B, 001D, 001E, 001F, 001J, 001K, 001L A254-75770-048-00		001

- ITEM NOT ILLUSTRATED

FIG. ITEM	PART NUMBER	AIRLINE STOCK NUMBER	NOMENCLATURE 1234567	EFF CODE	UNITS PER ASSY
-320B	A225400466-602		. . DISPENSER-TOILET SEAT COVER POST VSB A2-254-25-106 used on 001P		001
330A	NAS1100-08-4		. . SCREW PRE VSB A2-254-25-106 used on 001A, 001B, 001D, 001E, 001F, 001J, 001K, 001L		002
-330B	NAS1100-08-5		. . SCREW POST VSB A2-254-25-106 used on 001P		002
340A	A225401236-200		. . ANGLE used on 001A, 001B, 001C, 001D, 001E, 001F, 001G, 001H, 001J, 001K, 001L, 001M, 001N, 001P		001
350A	NAS1096-2-7		. . SCREW BUY PN NAS1801-08-7 used on 001A, 001B, 001C, 001D, 001E, 001F, 001G, 001H, 001J, 001K, 001L, 001M, 001N, 001P		009
360A	NAS1149CN832R		. . WASHER used on 001A, 001B, 001C, 001D, 001E, 001F, 001G, 001H, 001J, 001K, 001L, 001M, 001N, 001P		009
370A	2336000-9		. . KIT-LAVATORY PICTURE FRAME used on 001L		001
380A	NAS1100-08-4		. . SCREW used on 001L		002

- ITEM NOT ILLUSTRATED

FIG. ITEM	PART NUMBER	AIRLINE STOCK NUMBER	NOMENCLATURE 1234567	EFF CODE	UNITS PER ASSY
390A	A225400208-000		. . DEVICE ASSY-EMERGENCY UNLOCKING,SINGLE DOOR POST SB 25-1316 used on 001H		001
400A	A225400208-200		. . . HOUSING-EMERGENCY UN-LOCKING DEVICE used on 390A		001
410A	A225400208-204		. . . STRIKE-EMERGENCY UN-LOCKING DEVICE used on 390A		001
420A	A225400208-202		. . . PIVOT-EMERGENCY UN-LOCKING DEVICE used on 390A		001
430A	A225400208-210		. . . PIN used on 390A		001
440A	SM1275-1KNM04		. . . CATCH-SNAP used on 390A		001
450A	A225400208-208		. . . BOLT used on 390A		001
460A	A225400221-202		. . PLATE POST SB 25-1316 used on 001H		002
470A	NAS514P832-7		. . SCREW POST SB 25-1316 used on 001H		006
480A	NSA5067-08-1		. . NUT POST SB 25-1316 used on 001H		002
-490A	R225400211-014		. . STRIP-KICK POST VSB A2-254-25-106 used on 001P		001

- ITEM NOT ILLUSTRATED

THIS PAGE IS INTENTIONALLY LEFT BLANK

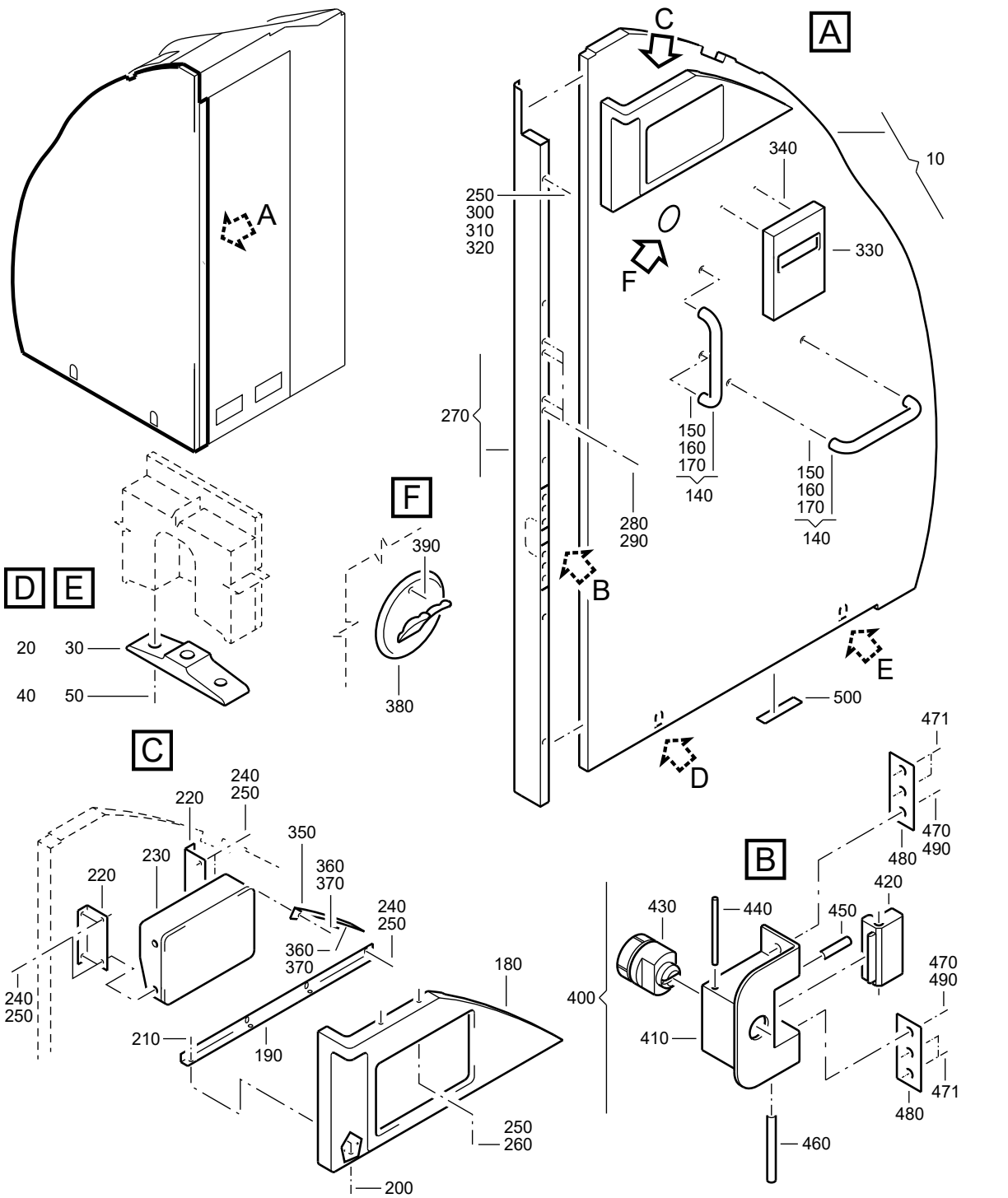

F_PL_254151_48_C_01_00

WALL-SIDE
Figure 48C/EN254151SHEET48C01

FIG. ITEM	PART NUMBER	AIRLINE STOCK NUMBER	NOMENCLATURE 1234567	EFF CODE	UNITS PER ASSY
48C					
-001A	D2549020400265		. WALL-SIDE NP used on 040K (25415142C) SEE 25-41-51-42C FOR NHA		RF
-001B	D2549020813665		. WALL-SIDE NP used on 040H (254151420), 040B (25415142E) SEE 25-41-51-420 FOR NHA SEE 25-41-51-42E FOR NHA		RF
-001C	D2549020810865		. WALL-SIDE NP used on 040C (25415142D) SEE 25-41-51-42D FOR NHA		RF
-001D	D2549020813265		. WALL-SIDE NP used on 040E (25415142D) SEE 25-41-51-42D FOR NHA		RF
-001E	D2549010400865		. WALL-SIDE NP used on 040F (25415142D) SEE 25-41-51-42D FOR NHA		RF
-001F	D2549030408265		. WALL-SIDE NP used on 040G (25415142D) SEE 25-41-51-42D FOR NHA		RF
-001G	D2549020403865		. WALL-SIDE NP used on 040H (25415142D) SEE 25-41-51-42D FOR NHA		RF
-001H	D2549030408465		. WALL-SIDE NP used on 040J (25415142D) SEE 25-41-51-42D FOR NHA		RF
-001J	D2549020400065		. WALL-SIDE NP used on 040L (25415142D) SEE 25-41-51-42D FOR NHA		RF

- ITEM NOT ILLUSTRATED

FIG. ITEM	PART NUMBER	AIRLINE STOCK NUMBER	NOMENCLATURE 1234567	EFF CODE	UNITS PER ASSY
-001K	D2549010402865		. WALL-SIDE NP used on 040G (25415142F) SEE 25-41-51-42F FOR NHA		RF
-001L	D2549030406665		. WALL-SIDE NP used on 040J (25415141W), 040E (25415142E) SEE 25-41-51-41W FOR NHA SEE 25-41-51-42E FOR NHA		RF
-001M	D2549020404065		. WALL-SIDE NP used on 040K (25415142F), 040F (25415142G), 040H(25415142T) SEE 25-41-51-42F FOR NHA SEE 25-41-51-42G FOR NHA SEE 25-41-51-42T FOR NHA		RF
-001N	D2549010614665		. WALL-SIDE NP used on 040L (25415142C) SEE 25-41-51-42C FOR NHA		RF
010A	A225401235-532		. . WALL ASSY-SIDE,AFT used on 001A		001
-010B	A225401235-556		. . WALL ASSY-SIDE,AFT used on 001B		001
-010C	A225401235-580		. . WALL ASSY-SIDE,AFT used on 001C		001
-010D	A225401235-572		. . WALL ASSY-SIDE,AFT used on 001D		001
-010E	A225401235-586		. . WALL ASSY-SIDE,AFT used on 001E		001
-010F	A225401235-584		. . WALL ASSY-SIDE,AFT used on 001F		001
-010G	A2254012358592		. . WALL ASSY-SIDE,AFT used on 001G		001

- ITEM NOT ILLUSTRATED

FIG. ITEM	PART NUMBER	AIRLINE STOCK NUMBER	NOMENCLATURE 1234567	EFF CODE	UNITS PER ASSY
-010H	A225401235-590		. . WALL ASSY-SIDE,AFT used on 001H		001
-010J	A225401235-594		. . WALL ASSY-SIDE,AFT used on 001J		001
-010K	A225401235-578		. . WALL ASSY-SIDE,AFT used on 001L		001
-010L	A225401235-604		. . WALL ASSY-SIDE,AFT used on 001M		001
-010M	A2254012358532		. . WALL ASSY-SIDE,AFT POST SB 25-1314 used on 001N		001
-010N	A2254012358556		. . WALL ASSY-SIDE,AFT POST SB 25-1314 used on 001K		001
020A	A225400232-208		. . . FITTING used on 010A, 010B, 010C, 010D, 010E, 010F, 010G, 010H, 010J, 010K, 010L, 010M, 010N		001
030A	A225400232-216		. . . FITTING used on 010A, 010B, 010C, 010D, 010E, 010F, 010G, 010H, 010J, 010K, 010L, 010M, 010N		001
040A	ABS0704-6-50		. . . SCREW used on 010A, 010B, 010C, 010D, 010E, 010F, 010G, 010H, 010J, 010K, 010L, 010M, 010N		002
050A	ABS0705-6-50		. . . SCREW used on 010A, 010B, 010C, 010D, 010E, 010F, 010G, 010H, 010J, 010K, 010L, 010M, 010N		002

- ITEM NOT ILLUSTRATED

FIG. ITEM	PART NUMBER	AIRLINE STOCK NUMBER	NOMENCLATURE 1234567	EFF CODE	UNITS PER ASSY
-060A	NAS1833C08-370		. . . INSERT used on 010A, 010B, 010C, 010D, 010E, 010F, 010G, 010H, 010J, 010K, 010L, 010M, 010N		083
-070A	NSA5054-08		. . . INSERT used on 010A, 010B, 010C, 010D, 010E, 010F, 010G, 010H, 010J, 010K, 010L, 010M, 010N		002
-080A	NAS1835C08		. . . INSERT used on 010A, 010B, 010C, 010D, 010E, 010F, 010G, 010H, 010J, 010K, 010L, 010M, 010N		009
-090A	NAS1833C3-370		. . . INSERT used on 010A, 010B, 010C, 010D, 010E, 010F, 010G, 010H, 010J, 010K, 010L, 010M, 010N		020
-100A	NSA5054-5		. . . INSERT used on 010A, 010B, 010C, 010D, 010E, 010F, 010G, 010H, 010J, 010K, 010L, 010M, 010N		012
-110A	NSA5054-3		. . . INSERT used on 010A, 010B, 010C, 010D, 010E, 010F, 010G, 010H, 010J, 010K, 010L, 010M, 010N		003
-120A	NSA5054-4		. . . INSERT used on 010A, 010B, 010C, 010D, 010E, 010F, 010G, 010H, 010J, 010K, 010L, 010M, 010N		006
-130A	NSA935405-01		. . . MOUNT used on 010A, 010B, 010C, 010D, 010E, 010F, 010G, 010H, 010J, 010K, 010L, 010M, 010N		010

- ITEM NOT ILLUSTRATED

FIG. ITEM	PART NUMBER	AIRLINE STOCK NUMBER	NOMENCLATURE 1234567	EFF CODE	UNITS PER ASSY
140A	550-33-300MBB		. . HANDLE ASSY used on 001A, 001B, 001C, 001D, 001E, 001F, 001G, 001H, 001J, 001K, 001L, 001M, 001N		002
150A	S7224		. . . SCREW-SPECIAL used on 140A		002
160A	8534		. . . PIN-SECURITY used on 140A		002
170A	8587		. . . WASHER-SPECIAL used on 140A		002
180A	A225401410-502		. . COVER-OXYGEN CONTAIN-ER ASSY used on 001A, 001B, 001C, 001D, 001E, 001G, 001H, 001J, 001K, 001L, 001M, 001N		001
-180B	A225401410-522		. . COVER-OXYGEN CONTAIN-ER ASSY used on 001F		001
190A	A225400450-204		. . ANGLE used on 001A, 001B, 001C, 001D, 001E, 001F, 001G, 001H, 001J, 001K, 001L, 001M, 001N		001
200A	NAS1102-08-5		. . SCREW used on 001A, 001B, 001C, 001D, 001E, 001F, 001G, 001H, 001J, 001K, 001L, 001M, 001N		004
210A	NSA5067-08-1		. . NUT used on 001A, 001B, 001C, 001D, 001E, 001F, 001G, 001H, 001J, 001K, 001L, 001M, 001N		004

- ITEM NOT ILLUSTRATED

FIG. ITEM	PART NUMBER	AIRLINE STOCK NUMBER	NOMENCLATURE 1234567	EFF CODE	UNITS PER ASSY
220A	A225400450-202		. . ANGLE used on 001A, 001B, 001C, 001D, 001E, 001F, 001G, 001H, 001J, 001K, 001L, 001M, 001N		002
230A	22C150150320004		. . CONTAINER ASSY-OXYGEN PRE VSB A2-254-25-047 used on 001A, 001B, 001E, 001N		001
-230B	G2F212-85		. . CONTAINER ASSY-OXYGEN used on 001C, 001D, 001G, 001H, 001J, 001K, 001M		001
-230C	G2F212-98		. . CONTAINER ASSY-OXYGEN used on 001F		001
-230D	E2F212-85		. . CONTAINER ASSY-OXYGEN PRE VSB A2-254-25-069 PRE VSB A2-254-25-100 used on 001L		001
-230E	22G220150320400		. . CONTAINER ASSY-OXYGEN POST VSB A2-254-25-069 POST VSB A2-254-25-100 used on 001L		001
-230F	22G150150320400		. . CONTAINER ASSY-OXYGEN POST VSB A2-254-25-047 used on 001N		001
240A	NAS1096-2-5		. . SCREW PRE VSB A2-254-25-047 PRE VSB A2-254-25-069 PRE VSB A2-254-25-100 BUY PN NAS1801-08-5 used on 001A, 001B, 001C, 001D, 001E, 001F, 001G, 001H, 001J, 001K, 001L, 001M, 001N		008

- ITEM NOT ILLUSTRATED

FIG. ITEM	PART NUMBER	AIRLINE STOCK NUMBER	NOMENCLATURE 1234567	EFF CODE	UNITS PER ASSY
-240B	NAS1096-2-5		. . SCREW POST VSB A2-254-25-047 POST VSB A2-254-25-069 POST VSB A2-254-25-100 BUY PN NAS1801-08-5 used on 001L, 001N		004
-245A	NAS1801-08-6		. . SCREW POST VSB A2-254-25-047 POST VSB A2-254-25-069 POST VSB A2-254-25-100 used on 001L, 001N		004
250A	NAS1149CN832R		. . WASHER used on 001A, 001B, 001C, 001D, 001E, 001F, 001G, 001H, 001J, 001K, 001L, 001M, 001N		015
260A	A225400451-202		. . STUD used on 001A, 001B, 001C, 001D, 001E, 001F, 001G, 001H, 001J, 001K, 001L, 001M, 001N		002
270A	A225401222-526		. . POST ASSY used on 001A, 001N		001
-270B	A225401222-500		. . POST ASSY used on 001B, 001E, 001G, 001H, 001J, 001K		001
-270C	A225401222-502		. . POST ASSY used on 001C		001
-270D	A225401222-560		. . POST ASSY used on 001D		001
-270E	A225401222-562		. . POST ASSY used on 001F		001

- ITEM NOT ILLUSTRATED

FIG. ITEM	PART NUMBER	AIRLINE STOCK NUMBER	NOMENCLATURE 1234567	EFF CODE	UNITS PER ASSY
-270F	A225401222-542		. . POST ASSY used on 001L		001
-270G	A225401222-600		. . POST ASSY used on 001M		001
280A	NAS514P832-4		. . . SCREW used on 270A, 270B, 270C, 270D, 270E, 270F, 270G		004
290A	NAS1068A08		. . . NUT BUY PN MS21075L08 used on 270A, 270B, 270C, 270D, 270E, 270F, 270G		004
300A	NAS1096-2-7		. . SCREW BUY PN NAS1801-08-7 used on 001A, 001B, 001C, 001D, 001E, 001F, 001G, 001H, 001J, 001K, 001L, 001M, 001N		005
310A	2634DP437-110		. . CAP used on 001A, 001B, 001C, 001D, 001E, 001F, 001G, 001H, 001J, 001K, 001L, 001M, 001N		005
320A	NAS1096-3-9		. . SCREW BUY PN NAS1801-3-9 used on 001A, 001B, 001C, 001D, 001E, 001F, 001G, 001H, 001J, 001K, 001L, 001M, 001N		001
330A	A2547577004800		. . DISPENSER-TOILET SEAT COVER used on 001A, 001B, 001D, 001G, 001H, 001J, 001K, 001M, 001N A254-75770-048-00		001

- ITEM NOT ILLUSTRATED

FIG. ITEM	PART NUMBER	AIRLINE STOCK NUMBER	NOMENCLATURE 1234567	EFF CODE	UNITS PER ASSY
-330B	A2547577008800		. . DISPENSER-TOILET SEAT COVER used on 001F		001
340A	NAS1100-08-4		. . SCREW used on 001A, 001B, 001D, 001F, 001G, 001H, 001J, 001K, 001M, 001N		002
350A	A225401236-200		. . ANGLE used on 001A, 001B, 001C, 001D, 001E, 001F, 001G, 001H, 001J, 001K, 001L, 001M, 001N		001
360A	NAS1096-2-7		. . SCREW BUY PN NAS1801-08-7 used on 001A, 001B, 001C, 001D, 001E, 001F, 001G, 001H, 001J, 001K, 001L, 001M, 001N		009
370A	NAS1149CN832R		. . WASHER used on 001A, 001B, 001C, 001D, 001E, 001F, 001G, 001H, 001J, 001K, 001L, 001M, 001N		009
380A	AR197-3		. . HOOK-COAT used on 001E, 001H, 001J		001
390A	NAS514P832-7		. . SCREW used on 001E, 001H, 001J		001
400A	A225400208-000		. . DEVICE ASSY-EMERGENCY UNLOCKING,SINGLE DOOR POST SB 25-1316 used on 001D, 001F, 001M		001
410A	A225400208-200		. . . HOUSING-EMERGENCY UN-LOCKING DEVICE used on 400A		001

- ITEM NOT ILLUSTRATED

FIG. ITEM	PART NUMBER	AIRLINE STOCK NUMBER	NOMENCLATURE 1234567	EFF CODE	UNITS PER ASSY
420A	A225400208-204		. . . STRIKE-EMERGENCY UN-LOCKING DEVICE used on 400A		001
430A	A225400208-202		. . . PIVOT-EMERGENCY UN-LOCKING DEVICE used on 400A		001
440A	A225400208-210		. . . PIN used on 400A		001
450A	SM1275-1KNM04		. . . CATCH-SNAP used on 400A		001
460A	A225400208-208		. . . BOLT used on 400A		001
470A	NAS514P832-7		. . SCREW POST SB 25-1316 used on 001D, 001F, 001M		002
471A	NAS514P832-7		. . SCREW POST SB 25-1316 used on 001F		004
480A	A225400221-202		. . PLATE POST SB 25-1316 used on 001F		002
490A	NSA5067-08-1		. . NUT POST SB 25-1316 used on 001F		002
500A	A225400231-362		. . STRIP-REINFORCING POST SB 25-1314 REQUIRED LENGTH 24MM used on 001G, 001K, 001N		001

- ITEM NOT ILLUSTRATED

THIS PAGE IS INTENTIONALLY LEFT BLANK

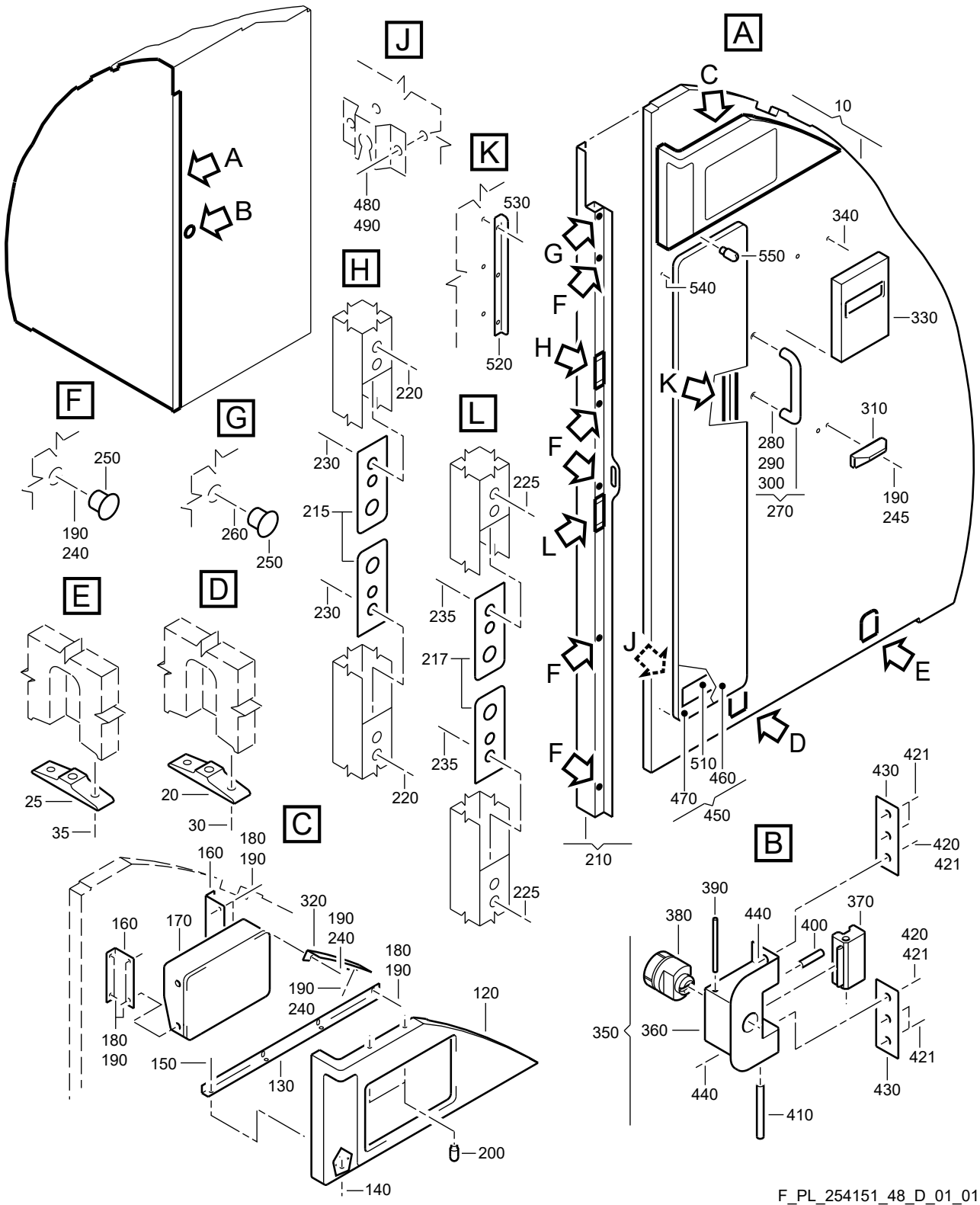

WALL-SIDE
Figure 48D/EN254151SHEET48D01

FIG. ITEM	PART NUMBER	AIRLINE STOCK NUMBER	NOMENCLATURE 1234567	EFF CODE	UNITS PER ASSY
48D					
-001A	D2549010400065		. WALL-SIDE NP PRE VSB A2-254-25-013 used on 040K (25415142D), 040E (25415142K) SEE 25-41-51-42D FOR NHA SEE 25-41-51-42K FOR NHA		RF
-001B	D2549030409865		. WALL-SIDE NP used on 040M (25415142D), 040K (25415142G) SEE 25-41-51-42D FOR NHA SEE 25-41-51-42G FOR NHA		RF
-001C	D2549020805265		. WALL-SIDE NP used on 040A (25415142E) SEE 25-41-51-42E FOR NHA		RF
-001D	D2549020401265		. WALL-SIDE NP used on 040F (25415142E), 040B (25415142P) SEE 25-41-51-42E FOR NHA SEE 25-41-51-42P FOR NHA		RF
-001E	D2549020407665		. WALL-SIDE NP used on 040A (25415142G) SEE 25-41-51-42G FOR NHA		RF
-001F	D2549020807265		. WALL-SIDE NP used on 040G (25415142E) SEE 25-41-51-42E FOR NHA		RF
-001G	D2549020402665		. WALL-SIDE NP PRE VSB A2-254-25-042 used on 040H (25415142E), 040B (25415142J), 040G (25415142P) SEE 25-41-51-42E FOR NHA SEE 25-41-51-42J FOR NHA SEE 25-41-51-42P FOR NHA		RF

- ITEM NOT ILLUSTRATED

FIG. ITEM	PART NUMBER	AIRLINE STOCK NUMBER	NOMENCLATURE 1234567		EFF CODE	UNITS PER ASSY
-001H	D2549030409065		. WALL-SIDE used on 040K (25415142E) SEE 25-41-51-42E FOR NHA	NP		RF
-001J	D2549010401865		. WALL-SIDE used on 040M (25415142G) SEE 25-41-51-42G FOR NHA	NP		RF
-001K	D2549010402265		. WALL-SIDE used on 040F (25415142H) SEE 25-41-51-42H FOR NHA	NP		RF
-001L	D2549010403665		. WALL-SIDE used on 040H (25415142H), 040H (25415142U) SEE 25-41-51-42H FOR NHA SEE 25-41-51-42U FOR NHA	NP		RF
-001M	D2549030411465		. WALL-SIDE used on 040K (25415142H), 040A (25415142L) SEE 25-41-51-42H FOR NHA SEE 25-41-51-42L FOR NHA	NP		RF
-001N	D2547161903065		. WALL-SIDE POST SB 25-1742 used on 040R (25415101G) SEE 25-41-51-01G FOR NHA	NP		RF
-001P	D2547161901865		. WALL-SIDE POST SB 25-1672 used on 040M (25415142E) SEE 25-41-51-42E FOR NHA	NP		RF
-001Q	D2549010400065		. WALL-SIDE POST VSB A2-254-25-013 used on 040N (25415142D), 040M (25415142K) SEE 25-41-51-42D FOR NHA SEE 25-41-51-42K FOR NHA	NP		RF

- ITEM NOT ILLUSTRATED

FIG. ITEM	PART NUMBER	AIRLINE STOCK NUMBER	NOMENCLATURE 1234567	EFF CODE	UNITS PER ASSY
-001R	R22540119601865		. WALL-SIDE NP PRE VSB A2-254-25-130 POST VSB A2-254-25-042 used on 040N (25415142E), 040J (25415142J), 040J (25415142P) SEE 25-41-51-42E FOR NHA SEE 25-41-51-42J FOR NHA SEE 25-41-51-42P FOR NHA		RF
-001S	R22540119606465		. WALL-SIDE NP POST VSB A2-254-25-130 used on 040P (25415142E), 040L (25415142J), 040K (25415142P) SEE 25-41-51-42E FOR NHA SEE 25-41-51-42J FOR NHA SEE 25-41-51-42P FOR NHA		RF
010A	A225401235576		. . WALL ASSY-SIDE,AFT PRE VSB A2-254-25-013 POST SB 25-1314 used on 001A		001
-010B	A225401235-506		. . WALL ASSY-SIDE,AFT used on 001B		001
-010C	A225401235-588		. . WALL ASSY-SIDE,AFT used on 001C		001
-010D	A225401235-618		. . WALL ASSY-SIDE,AFT used on 001D		001
-010E	A225401235-654		. . WALL ASSY-SIDE,AFT used on 001E		001
-010F	A225401235-608		. . WALL ASSY-SIDE,AFT used on 001F, 001P		001
-010G	A225401235-610		. . WALL ASSY-SIDE,AFT PRE VSB A2-254-25-130 used on 001G, 001M, 001R		001

- ITEM NOT ILLUSTRATED

FIG. ITEM	PART NUMBER	AIRLINE STOCK NUMBER	NOMENCLATURE 1234567	EFF CODE	UNITS PER ASSY
-010H	A225401235-614		. . WALL ASSY-SIDE,AFT used on 001H		001
-010J	A225401235-624		. . WALL ASSY-SIDE,AFT used on 001J		001
-010K	A225401235-632		. . WALL ASSY-SIDE,AFT used on 001K		001
-010L	A225401235-636		. . WALL ASSY-SIDE,AFT used on 001L		001
-010M	A225401231-674		. . WALL ASSY-SIDE,AFT POST SB 25-1742 used on 001N		001
-010N	A225401235-738		. . WALL ASSY-SIDE,AFT POST VSB A2-254-25-013 used on 001Q		001
-010P	A225401235-754		. . WALL ASSY-SIDE,AFT POST VSB A2-254-25-130 used on 001S		001
020A	A225400232-208		. . . FITTING used on 010A, 010B, 010C, 010D, 010E, 010F, 010G, 010H, 010J, 010K, 010L, 010M, 010N, 010P		001
025A	A225400232-216		. . . FITTING used on 010A, 010B, 010C, 010D, 010E, 010F, 010G, 010H, 010J, 010K, 010L, 010M, 010N, 010P		001
030A	ABS0704-6-50		. . . SCREW used on 010A, 010B, 010C, 010D, 010E, 010F, 010G, 010H, 010J, 010K, 010L, 010M, 010N, 010P		002

- ITEM NOT ILLUSTRATED

FIG. ITEM	PART NUMBER	AIRLINE STOCK NUMBER	NOMENCLATURE 1234567	EFF CODE	UNITS PER ASSY
035A	ABS0705-6-50		. . . SCREW used on 010A, 010B, 010C, 010D, 010E, 010F, 010G, 010H, 010J, 010K, 010L, 010M, 010N, 010P		002
-040A	NAS1833C08-370		. . . INSERT used on 010A, 010B, 010C, 010D, 010E, 010F, 010G, 010H, 010J, 010K, 010L, 010M, 010N, 010P		083
-050A	NSA5054-08		. . . INSERT used on 010A, 010B, 010C, 010D, 010E, 010F, 010G, 010H, 010J, 010K, 010L, 010M, 010N, 010P		002
-060A	NAS1835C08		. . . INSERT used on 010A, 010B, 010C, 010D, 010E, 010F, 010G, 010H, 010J, 010K, 010L, 010M, 010N, 010P		009
-070A	NAS1833C3-370		. . . INSERT used on 010A, 010B, 010C, 010D, 010E, 010F, 010G, 010H, 010J, 010K, 010L, 010M, 010N, 010P		020
-080A	NSA5054-5		. . . INSERT used on 010A, 010B, 010C, 010D, 010E, 010F, 010G, 010H, 010J, 010K, 010L, 010M, 010N, 010P		012
-090A	NSA5054-3		. . . INSERT used on 010A, 010B, 010C, 010D, 010E, 010F, 010G, 010H, 010J, 010K, 010L, 010M, 010N, 010P		003

- ITEM NOT ILLUSTRATED

FIG. ITEM	PART NUMBER	AIRLINE STOCK NUMBER	NOMENCLATURE 1234567	EFF CODE	UNITS PER ASSY
-100A	NSA5054-4		. . . INSERT used on 010A, 010B, 010C, 010D, 010E, 010F, 010G, 010H, 010J, 010K, 010L, 010M, 010N, 010P		006
-110A	NSA935405-01		. . . MOUNT used on 010A, 010B, 010C, 010D, 010E, 010F, 010G, 010H, 010J, 010K, 010L, 010M, 010N, 010P		010
120A	A225401410-502		. . COVER-OXYGEN CONTAIN-ER ASSY PRE VSB A2-254-25-130 used on 001A, 001B, 001D, 001E, 001F, 001G, 001K, 001L, 001M, 001N, 001P, 001Q, 001R		001
-120B	A225401410-520		. . COVER-OXYGEN CONTAIN-ER ASSY used on 001C		001
-120C	A225401410-504		. . COVER-OXYGEN CONTAIN-ER ASSY used on 001H		001
-120D	A225401410-518		. . COVER-OXYGEN CONTAIN-ER ASSY POST VSB A2-254-25-130 used on 001J, 001S		001
130A	A225400450-204		. . ANGLE used on 001A, 001B, 001C, 001D, 001E, 001F, 001G, 001H, 001J, 001K, 001L, 001M, 001N, 001P, 001Q, 001R, 001S		001

- ITEM NOT ILLUSTRATED

FIG. ITEM	PART NUMBER	AIRLINE STOCK NUMBER	NOMENCLATURE 1234567	EFF CODE	UNITS PER ASSY
140A	NAS1102-08-5		. . SCREW used on 001A, 001B, 001C, 001D, 001E, 001F, 001G, 001H, 001J, 001K, 001L, 001M, 001N, 001P, 001Q, 001R, 001S		004
150A	NSA5067-08-1		. . NUT used on 001A, 001B, 001C, 001D, 001E, 001F, 001G, 001H, 001J, 001K, 001L, 001M, 001N, 001P, 001Q, 001R, 001S		004
160A	A225400450-202		. . ANGLE used on 001A, 001B, 001C, 001D, 001E, 001F, 001G, 001H, 001J, 001K, 001L, 001M, 001N, 001P, 001Q, 001R, 001S		002
170A	G2F212-85		. . CONTAINER ASSY-OXYGEN PRE VSB A2-254-25-042 PRE VSB A2-254-25-057 used on 001A, 001B, 001D, 001G, 001K, 001Q		001
-170B	G2F212-09		. . CONTAINER ASSY-OXYGEN used on 001C		001
-170C	22C150150320004		. . CONTAINER ASSY-OXYGEN PRE VSB A2-254-25-064 PRE VSB A2-254-25-070 PRE VSB A2-254-25-085 used on 001E, 001F, 001L, 001M, 001P		001
-170D	G2F212-51		. . CONTAINER ASSY-OXYGEN PRE VSB A2-254-25-046 used on 001H		001
-170E	22C150150460004		. . CONTAINER ASSY-OXYGEN used on 001J		001

- ITEM NOT ILLUSTRATED

FIG. ITEM	PART NUMBER	AIRLINE STOCK NUMBER	NOMENCLATURE 1234567	EFF CODE	UNITS PER ASSY
-170F	AH5702-85		. . CONTAINER ASSY-OXYGEN used on 001N		001
-170G	22G220150320400		. . CONTAINER ASSY-OXYGEN PRE VSB A2-254-25-130 POST VSB A2-254-25-042 POST VSB A2-254-25-064 used on 001M, 001R		001
-170H	22G150150460400		. . CONTAINER ASSY-OXYGEN POST VSB A2-254-25-046 used on 001H		001
-170J	22G150150320400		. . CONTAINER ASSY-OXYGEN POST VSB A2-254-25-057 POST VSB A2-254-25-070 POST VSB A2-254-25-085 used on 001E, 001G, 001M		001
-170K	22G220150460400		. . CONTAINER ASSY-OXYGEN POST VSB A2-254-25-130 used on 001S		001
180A	NAS1096-2-5		. . SCREW BUY PN NAS1801-08-5 PRE VSB A2-254-25-013 PRE VSB A2-254-25-042 PRE VSB A2-254-25-046 PRE VSB A2-254-25-057 PRE VSB A2-254-25-064 PRE VSB A2-254-25-070 PRE VSB A2-254-25-085 used on 001A, 001B, 001C, 001D, 001E, 001F, 001G, 001H, 001J, 001K, 001L, 001M, 001N, 001P		012

- ITEM NOT ILLUSTRATED

FIG. ITEM	PART NUMBER	AIRLINE STOCK NUMBER	NOMENCLATURE 1234567	EFF CODE	UNITS PER ASSY
-180B	NAS1096-2-5		. . SCREW BUY PN NAS1801-08-5 POST VSB A2-254-25-042 POST VSB A2-254-25-046 POST VSB A2-254-25-057 POST VSB A2-254-25-064 POST VSB A2-254-25-070 POST VSB A2-254-25-085 used on 001E, 001G, 001H, 001M, 001R, 001S		008
-180C	NAS1801-08-5		. . SCREW POST VSB A2-254-25-013 used on 001Q		012
-187A	NAS1801-08-6		. . SCREW PRE VSB A2-254-25-130 POST VSB A2-254-25-042 POST VSB A2-254-25-046 POST VSB A2-254-25-057 POST VSB A2-254-25-064 POST VSB A2-254-25-070 POST VSB A2-254-25-085 used on 001E, 001G, 001H, 001M, 001R		004
-187B	NAS1801-08-5		. . SCREW POST VSB A2-254-25-130 used on 001S		004
190A	NAS1149CN832R		. . WASHER PRE VSB A2-254-25-013 PRE VSB A2-254-25-042 used on 001A, 001B, 001C, 001D, 001E, 001F, 001G, 001H, 001J, 001K, 001L, 001M, 001N, 001P		024

- ITEM NOT ILLUSTRATED

FIG. ITEM	PART NUMBER	AIRLINE STOCK NUMBER	NOMENCLATURE 1234567	EFF CODE	UNITS PER ASSY
-190B	NAS1149CN832R		. . WASHER PRE VSB A2-254-25-130 POST VSB A2-254-25-042 used on 001R		020
-190C	NAS1149CN832R		. . WASHER POST VSB A2-254-25-013 used on 001Q		012
-190D	NAS1149CN832R		. . WASHER POST VSB A2-254-25-130 used on 001S		018
-195A	AN960C8		. . WASHER POST VSB A2-254-25-042 used on 001R, 001S		004
200A	A225400451-202		. . STUD used on 001A, 001B, 001C, 001D, 001E, 001F, 001G, 001H, 001J, 001K, 001L, 001M, 001N, 001P, 001Q, 001R, 001S		002
210A	A225401222-500		. . POST ASSY used on 001A, 001B, 001Q		001
-210B	A225401222-552		. . POST ASSY used on 001C		001
-210C	A225401222-600		. . POST ASSY PRE VSB A2-254-25-130 used on 001D, 001G, 001K, 001M, 001R		001
-210D	A225401222-604		. . POST ASSY used on 001E, 001F, 001L, 001P		001
-210E	A225401222-606		. . POST ASSY used on 001H		001

- ITEM NOT ILLUSTRATED

FIG. ITEM	PART NUMBER	AIRLINE STOCK NUMBER	NOMENCLATURE 1234567	EFF CODE	UNITS PER ASSY
-210F	A225401222-612		. . POST ASSY POST VSB A2-254-25-130 used on 001J, 001S		001
-210G	A225401222-502		. . POST ASSY used on 001N		001
215A	A225400221-202		. . . PLATE used on 210A, 210B, 210C, 210D, 210E, 210F, 210G		002
217A	A225400221-202		. . . PLATE used on 210C, 210D, 210E, 210F		002
220A	NAS514P832-4		. . . SCREW used on 210A, 210B, 210C, 210D, 210E, 210F, 210G		004
225A	NAS514P832-4		. . . SCREW used on 210C, 210D, 210E, 210F		004
230A	NAS1068A08		. . . NUT BUY PN MS21075L08 used on 210A, 210B, 210C, 210D, 210E, 210F, 210G		004
235A	NAS1068A08		. . . NUT BUY PN MS21075L08 used on 210C, 210D, 210E, 210F		004
240A	NAS1096-2-7		. . SCREW BUY PN NAS1801-08-7 used on 001A, 001B, 001C, 001D, 001E, 001F, 001G, 001H, 001J, 001K, 001L, 001M, 001N, 001P, 001Q, 001R, 001S		014

- ITEM NOT ILLUSTRATED

FIG. ITEM	PART NUMBER	AIRLINE STOCK NUMBER	NOMENCLATURE 1234567	EFF CODE	UNITS PER ASSY
245A	NAS1096-2-7		. . SCREW BUY PN NAS1801-08-7 PRE VSB A2-254-25-130 used on 001A, 001B, 001C, 001D, 001E, 001F, 001G, 001H, 001J, 001K, 001L, 001M, 001N, 001Q, 001R		002
-245B	NAS1801-08-6		. . SCREW POST SB 25-1672 used on 001P		002
250A	2634DP437-110		. . CAP used on 001A, 001B, 001C, 001D, 001E, 001F, 001G, 001H, 001J, 001K, 001L, 001M, 001N, 001P, 001Q, 001R, 001S		006
260A	NAS1096-3-9		. . SCREW BUY PN NAS1801-3-9 used on 001A, 001B, 001C, 001D, 001E, 001F, 001G, 001H, 001J, 001K, 001L, 001M, 001N, 001P, 001Q, 001R, 001S		001
270A	550MBB1		. . HANDLEASSY PRE VSB A2-254-25-130 PRE VSB A2-254-25-013 used on 001A, 001B, 001C, 001D, 001E, 001F, 001G, 001H, 001J, 001K, 001L, 001M, 001P, 001R		001
-270B	550-33-300MBB		. . HANDLE ASSY used on 001N		001

- ITEM NOT ILLUSTRATED

FIG. ITEM	PART NUMBER	AIRLINE STOCK NUMBER	NOMENCLATURE 1234567	EFF CODE	UNITS PER ASSY
-270C	A2254001104		. . HANDLE ASSY POST VSB A2-254-25-130 POST VSB A2-254-25-013 used on 001Q, 001S A2-254-0011-04		002
280A	S7224		. . . SCREW-SPECIAL used on 270A, 270B, 270C		002
290A	8534		. . . PIN-SECURITY used on 270A, 270B, 270C		002
300A	8587		. . . WASHER-SPECIAL used on 270A, 270B, 270C		002
-305A	A225400233-200		. . BUSHING POST VSB A2-254-25-013 used on 001Q		004
-305B	A225400233-200		. . BUSHING POST VSB A2-254-25-130 used on 001S		003
310A	A2547380206000		. . SUPPORT PRE VSB A2-254-25-130 used on 001A, 001B, 001D, 001E, 001F, 001G, 001K, 001L, 001M, 001N, 001P, 001R		001
-310B	A2547380209800		. . SUPPORT used on 001C		001
-310C	A2547380208400		. . SUPPORT used on 001H		001
-310D	A2547380210200		. . SUPPORT used on 001J		001

- ITEM NOT ILLUSTRATED

FIG. ITEM	PART NUMBER	AIRLINE STOCK NUMBER	NOMENCLATURE 1234567	EFF CODE	UNITS PER ASSY
320A	A225401236-200		. . ANGLE used on 001A, 001B, 001C, 001D, 001E, 001F, 001G, 001H, 001J, 001K, 001L, 001M, 001P, 001Q, 001R, 001S		001
330A	A2547577007000		. . DISPENSER-TOILET SEAT COVER used on 001H		001
-330B	A2547577004800		. . DISPENSER-TOILET SEAT COVER PRE VSB A2-254-25-130 used on 001A, 001D, 001E, 001F, 001G, 001L, 001M, 001N, 001P, 001Q, 001R A254-75770-048-00		001
-330C	A2547577008200		. . DISPENSER-TOILET SEAT COVER POST VSB A2-254-25-130 used on 001J, 001S A254-75770-082-00		001
340A	NAS1100-08-6		. . SCREW PRE VSB A2-254-25-013 used on 001A, 001H, 001J		002
-340B	NAS1100-08-4		. . SCREW POST VSB A2-254-25-013 used on 001D, 001E, 001F, 001G, 001L, 001M, 001N, 001P, 001Q, 001R, 001S		002
350A	A225400208-000		. . DEVICE ASSY-EMERGENCY UNLOCKING,SINGLE DOOR POST SB 25-1316 used on 001A, 001D, 001E, 001F, 001G, 001H, 001J, 001K, 001L, 001M, 001P, 001Q, 001R, 001S		001

- ITEM NOT ILLUSTRATED

FIG. ITEM	PART NUMBER	AIRLINE STOCK NUMBER	NOMENCLATURE 1234567	EFF CODE	UNITS PER ASSY
360A	A225400208-200		. . . HOUSING-EMERGENCY UN-LOCKING DEVICE used on 350A		001
370A	A225400208-204		. . . STRIKE-EMERGENCY UN-LOCKING DEVICE used on 350A		001
380A	A225400208-202		. . . PIVOT-EMERGENCY UN-LOCKING DEVICE used on 350A		001
390A	A225400208-210		. . . PIN used on 350A		001
400A	SM1275-1KNM04		. . . CATCH-SNAP used on 350A		001
410A	A225400208-208		. . . BOLT used on 350A		001
420A	NAS514P832-7		. . SCREW used on 001D, 001E, 001F, 001G, 001H, 001J, 001K, 001L, 001M, 001P, 001R, 001S		002
421A	NAS514P832-7		. . SCREW POST SB 25-1316 used on 001A, 001Q		006
430A	A225400221-202		. . PLATE POST SB 25-1316 used on 001A, 001Q		002
440A	NSA5067-08-1		. . NUT POST SB 25-1316 used on 001A, 001Q		002
450A	A225400470-008		. . MIRROR ASSY POST SB 25-1672 used on 001P		001

- ITEM NOT ILLUSTRATED

FIG. ITEM	PART NUMBER	AIRLINE STOCK NUMBER	NOMENCLATURE 1234567	EFF CODE	UNITS PER ASSY
460A	A225400470-208		. . . MIRROR used on 450A		001
470A	A225400470-108		. . . PANEL-MIRROR used on 450A		001
480A	NAS1100-06-3		. . . . SCREW used on 470A		010
490A	NAS1149CN632R		. . . . WASHER used on 470A		010
-500A	NSA5345-06C		. . . . INSERT used on 470A		010
510A	SC0TCH4032-25		. . . FILM-ADHESIVE USE AS REQUIRED SC0TCHM0UNT4032-25 used on 450A		AR
520A	A325400471-500		. . SECTION used on 001P		001
530A	NAS1102-08-5		. . SCREW POST SB 25-1672 used on 001P		003
540A	NAS1100-08-4		. . SCREW POST SB 25-1672 used on 001P		005
550A	A225400451-200		. . STUD POST SB 25-1672 used on 001P		001
-560A	NAS1833C08-370		. . INSERT POST SB 25-1672 used on 001P		005

- ITEM NOT ILLUSTRATED

FIG. ITEM	PART NUMBER	AIRLINE STOCK NUMBER	NOMENCLATURE 1234567	EFF CODE	UNITS PER ASSY
-570A	NAS1835C08		. . INSERT POST SB 25-1672 used on 001P		004
-580A	A225400216-314		. . STRIP-KICK POST VSB A2-254-25-130 used on 001S		001

- ITEM NOT ILLUSTRATED

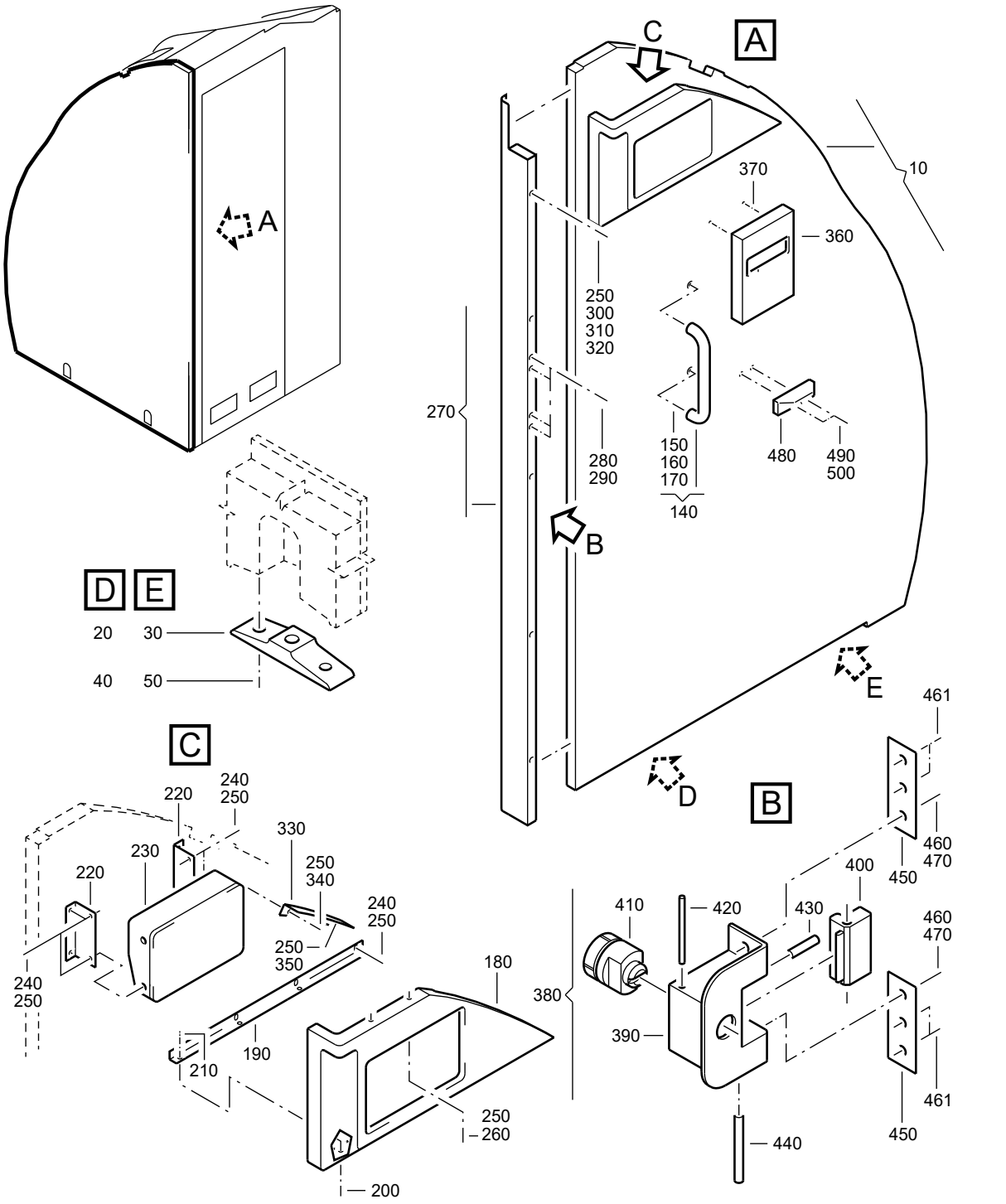

F_PL_254151_48_E_01_00

WALL-SIDE
Figure 48E/EN254151SHEET48E01

FIG. ITEM	PART NUMBER	AIRLINE STOCK NUMBER	NOMENCLATURE 1234567	EFF CODE	UNITS PER ASSY
48E					
-001A	D2549020503465		. WALL-SIDE NP used on 040K (25415101B), 040L (25415101K) SEE 25-41-51-01B FOR NHA SEE 25-41-51-01K FOR NHA		RF
-001B	D2549010502065		. WALL-SIDE NP used on 040K (25415101F), 040C (25415101H), 040C(25415101J), 040A (25415101L), 040C (25415101Q), 040K(25415101X) SEE 25-41-51-01F FOR NHA SEE 25-41-51-01H FOR NHA SEE 25-41-51-01J FOR NHA SEE 25-41-51-01L FOR NHA SEE 25-41-51-01Q FOR NHA SEE 25-41-51-01X FOR NHA		RF
-001C	D2549010502165		. WALL-SIDE NP POST SB 25-1314 used on 040L (25415101C) SEE 25-41-51-01C FOR NHA		RF
-001D	D2549010514265		. WALL-SIDE NP POST SB 25-1289 PRE VSB A2-254-25-032 used on 040H (25415101T), 040D (254151410) SEE 25-41-51-01T FOR NHA SEE 25-41-51-410 FOR NHA		RF
-001E	D2549030500265		. WALL-SIDE NP used on 040J (25415101G), 040M (25415101K) SEE 25-41-51-01G FOR NHA SEE 25-41-51-01K FOR NHA		RF

- ITEM NOT ILLUSTRATED

FIG. ITEM	PART NUMBER	AIRLINE STOCK NUMBER	NOMENCLATURE 1234567		EFF CODE	UNITS PER ASSY
-001F	D2549010511265		. WALL-SIDE used on 040N (25415101H) SEE 25-41-51-01H FOR NHA	NP		RF
-001G	D2549020603265		. WALL-SIDE used on 040M (25415101H), 040K (25415101L) SEE 25-41-51-01H FOR NHA SEE 25-41-51-01L FOR NHA	NP		RF
-001H	D2549020608865		. WALL-SIDE PRE VSB A2-254-25-032 used on 040B (25415101L) SEE 25-41-51-01L FOR NHA	NP		RF
-001J	D2549010509065		. WALL-SIDE used on 040A (25415101N), 040G (25415101Q), 040M (25415141D) SEE 25-41-51-01N FOR NHA SEE 25-41-51-01Q FOR NHA SEE 25-41-51-41D FOR NHA	NP		RF
-001K	D2549010504465		. WALL-SIDE used on 040D (25415101C), 040D (25415101F) SEE 25-41-51-01C FOR NHA SEE 25-41-51-01F FOR NHA	NP		RF
-001L	D2549010504265		. WALL-SIDE used on 040C (25415101C) SEE 25-41-51-01C FOR NHA	NP		RF
-001M	D2549010504965		. WALL-SIDE POST SB 25-1289 used on 040M (25415101C) SEE 25-41-51-01C FOR NHA	NP		RF
-001N	D2549020601265		. WALL-SIDE used on 040L (25415101L) SEE 25-41-51-01L FOR NHA	NP		RF

- ITEM NOT ILLUSTRATED

FIG. ITEM	PART NUMBER	AIRLINE STOCK NUMBER	NOMENCLATURE 1234567		EFF CODE	UNITS PER ASSY
-001P	D2549020608865		. WALL-SIDE POST VSB A2-254-25-032 used on 040N (25415101L) SEE 25-41-51-01L FOR NHA	NP		RF
-001Q	D2549010514265		. WALL-SIDE POST VSB A2-254-25-032 used on 040P (254151410) SEE 25-41-51-410 FOR NHA	NP		RF
010A	A225491231-532		. . WALL ASSY-SIDE,AFT POST SB 25-1289 used on 001A			001
-010B	A225491231-526		. . WALL ASSY-SIDE,AFT POST SB 25-1289 used on 001B, 001E			001
-010C	A2254012318538		. . WALL ASSY-SIDE,AFT POST SB 25-1314 used on 001C			001
-010D	A2254012318526		. . WALL ASSY-SIDE,AFT POST SB 25-1314 used on 001F			001
-010E	A2254012338522		. . WALL ASSY-SIDE,AFT POST SB 25-1314 used on 001D, 001Q			001
-010F	A2254012318602		. . WALL ASSY-SIDE,AFT POST SB 25-1314 used on 001G			001
-010G	A2254012318630		. . WALL ASSY-SIDE,AFT POST SB 25-1314 used on 001H, 001P			001
-010H	A225491231-500		. . WALL ASSY-SIDE,AFT POST SB 25-1314 used on 001J			001

- ITEM NOT ILLUSTRATED

FIG. ITEM	PART NUMBER	AIRLINE STOCK NUMBER	NOMENCLATURE 1234567	EFF CODE	UNITS PER ASSY
-010J	A225491231-514		. . WALL ASSY-SIDE,AFT POST SB 25-1289 used on 001K		001
-010K	A225491231-540		. . WALL ASSY-SIDE,AFT POST SB 25-1314 used on 001L		001
-010L	A225491231-514		. . WALL ASSY-SIDE,AFT POST SB 25-1314 used on 001M		001
-010M	A225491231-548		. . WALL ASSY-SIDE,AFT POST SB 25-1314 used on 001N		001
020A	A225400232-208		. . . FITTING used on 010A, 010B, 010C, 010D, 010E, 010F, 010G, 010H, 010J, 010K, 010L, 010M		001
030A	A225400232-216		. . . FITTING used on 010A, 010B, 010C, 010D, 010E, 010F, 010G, 010H, 010J, 010K, 010L, 010M		001
040A	ABS0704-6-50		. . . SCREW used on 010A, 010B, 010C, 010D, 010E, 010F, 010G, 010H, 010J, 010K, 010L, 010M		002
050A	ABS0705-6-50		. . . SCREW used on 010A, 010B, 010C, 010D, 010E, 010F, 010G, 010H, 010J, 010K, 010L, 010M		002
-060A	NAS1833C08-370		. . . INSERT used on 010A, 010B, 010C, 010D, 010E, 010F, 010G, 010H, 010J, 010K, 010L, 010M		083

- ITEM NOT ILLUSTRATED

FIG. ITEM	PART NUMBER	AIRLINE STOCK NUMBER	NOMENCLATURE 1234567	EFF CODE	UNITS PER ASSY
-070A	NAS1835C08		. . . INSERT used on 010A, 010B, 010C, 010D, 010E, 010F, 010G, 010H, 010J, 010K, 010L, 010M		007
-080A	NAS1833C3-370		. . . INSERT used on 010A, 010B, 010C, 010D, 010E, 010F, 010G, 010H, 010J, 010K, 010L, 010M		028
-090A	NSA5054-5		. . . INSERT used on 010A, 010B, 010C, 010D, 010E, 010F, 010G, 010H, 010J, 010K, 010L, 010M		011
-100A	NSA5054-3		. . . INSERT used on 010A, 010B, 010C, 010D, 010E, 010F, 010G, 010H, 010J, 010K, 010L, 010M		001
-110A	NSA5054-4		. . . INSERT used on 010A, 010B, 010C, 010D, 010E, 010F, 010G, 010H, 010J, 010K, 010L, 010M		006
-120A	NSA5054-08		. . . INSERT used on 010A, 010B, 010C, 010D, 010E, 010F, 010G, 010H, 010J, 010K, 010L, 010M		002
-130A	NSA935405-01		. . . MOUNT used on 010A, 010B, 010C, 010D, 010E, 010F, 010G, 010H, 010J, 010K, 010L, 010M		010
140A	550MBB1		. . HANDLE ASSY used on 001A, 001B, 001E, 001F, 001J, 001L		001

- ITEM NOT ILLUSTRATED

FIG. ITEM	PART NUMBER	AIRLINE STOCK NUMBER	NOMENCLATURE 1234567	EFF CODE	UNITS PER ASSY
140B	550-33-300MBB		. . HANDLE ASSY used on 001C, 001D, 001G, 001H, 001K, 001M, 001N, 001P, 001Q		001
150A	S7224		. . . SCREW-SPECIAL used on 140A, 140B		002
160A	8534		. . . PIN-SECURITY used on 140A, 140B		002
170A	8587		. . . WASHER-SPECIAL used on 140A, 140B		002
180A	A225401410-502		. . COVER-OXYGEN CONTAIN-ER ASSY used on 001A, 001B, 001C, 001D, 001E, 001F, 001G, 001H, 001J, 001K, 001L, 001M, 001N, 001P, 001Q		001
190A	A225400450-204		. . ANGLE used on 001A, 001B, 001C, 001D, 001E, 001F, 001G, 001H, 001J, 001K, 001L, 001M, 001N, 001P, 001Q		001
200A	NAS1102-08-5		. . SCREW used on 001A, 001B, 001C, 001D, 001E, 001F, 001G, 001H, 001J, 001K, 001L, 001M, 001N, 001P, 001Q		004
210A	NSA5067-08-1		. . NUT used on 001A, 001B, 001C, 001D, 001E, 001F, 001G, 001H, 001J, 001K, 001L, 001M, 001N, 001P, 001Q		004

- ITEM NOT ILLUSTRATED

FIG. ITEM	PART NUMBER	AIRLINE STOCK NUMBER	NOMENCLATURE 1234567	EFF CODE	UNITS PER ASSY
220A	A225400450-202		. . ANGLE used on 001A, 001B, 001C, 001D, 001E, 001F, 001G, 001H, 001J, 001K, 001L, 001M, 001N, 001P, 001Q		002
230A	AH5702-25		. . CONTAINER ASSY-OXYGEN used on 001A, 001B, 001C, 001E		001
-230B	G2F212-85		. . CONTAINER ASSY-OXYGEN used on 001D, 001G, 001H, 001P, 001Q		001
-230C	S2F212-25		. . CONTAINER ASSY-OXYGEN PRE VSB A2-254-25-078 used on 001A, 001B, 001C, 001E, 001F		001
-230D	22C150150320003		. . CONTAINER ASSY-OXYGEN used on 001J, 001K, 001M, 001N		001
-230E	22C150150320004		. . CONTAINER ASSY-OXYGEN used on 001J, 001K, 001M		001
-230F	AH5702-85		. . CONTAINER ASSY-OXYGEN used on 001L		001
-230G	22C150150320001		. . CONTAINER ASSY-OXYGEN used on 001N		001
-230H	22G150150170400		. . CONTAINER ASSY-OXYGEN POST VSB A2-254-25-078 used on 001F		001

- ITEM NOT ILLUSTRATED

FIG. ITEM	PART NUMBER	AIRLINE STOCK NUMBER	NOMENCLATURE 1234567	EFF CODE	UNITS PER ASSY
240A	NAS1096-2-5		. . SCREW PRE VSB A2-254-25-078 BUY PN NAS1801-08-5 used on 001A, 001B, 001C, 001D, 001E, 001F, 001G, 001H, 001J, 001K, 001L, 001M, 001N, 001P, 001Q		008
-240B	NAS1096-2-5		. . SCREW POST VSB A2-254-25-078 BUY PN NAS1801-08-5 used on 001F		004
-245A	NAS1801-08-6		. . SCREW POST VSB A2-254-25-078 used on 001F		004
250A	NAS1149C0332R		. . WASHER PRE VSB A2-254-25-078 used on 001A, 001B, 001C, 001D, 001E, 001F, 001G, 001H, 001J, 001K, 001L, 001M, 001N, 001P, 001Q		022
-250B	NAS1149C0332R		. . WASHER POST VSB A2-254-25-078 used on 001F		018
-255A	NAS1149CN832R		. . WASHER POST VSB A2-254-25-078 used on 001F		004
260A	A225400451-200		. . STUD used on 001A, 001B, 001C, 001D, 001E, 001F, 001G, 001H, 001J, 001K, 001L, 001M, 001N, 001P, 001Q		002
270A	A225401222-504		. . POST ASSY used on 001A		001

- ITEM NOT ILLUSTRATED

FIG. ITEM	PART NUMBER	AIRLINE STOCK NUMBER	NOMENCLATURE 1234567	EFF CODE	UNITS PER ASSY
-270B	A225401222-500		. . POST ASSY used on 001B, 001C, 001D, 001E, 001F, 001G, 001H, 001J, 001K, 001M, 001P, 001Q		001
-270C	A225401222-510		. . POST ASSY POST SB 25-1316 used on 001L		001
-270D	A225401222-520		. . POST ASSY used on 001N		001
280A	NAS514P832-4		. . . SCREW used on 270A, 270B, 270C, 270D		004
290A	NAS1068A08		. . . NUT BUY PN MS21075L08 used on 270A, 270B, 270C, 270D		004
300A	NAS1096-2-7		. . SCREW BUY PN NAS1801-08-7 used on 001A, 001B, 001C, 001D, 001E, 001F, 001G, 001H, 001J, 001K, 001L, 001M, 001N, 001P, 001Q		005
310A	2634DP437-110		. . CAP used on 001A, 001B, 001C, 001D, 001E, 001F, 001G, 001H, 001J, 001K, 001L, 001M, 001N, 001P, 001Q		004
320A	NAS1096-3-9		. . SCREW BUY PN NAS1801-3-9 used on 001A, 001B, 001C, 001D, 001E, 001F, 001G, 001H, 001J, 001K, 001L, 001M, 001N, 001P, 001Q		001

- ITEM NOT ILLUSTRATED

FIG. ITEM	PART NUMBER	AIRLINE STOCK NUMBER	NOMENCLATURE 1234567	EFF CODE	UNITS PER ASSY
330A	A225401236-200		. . ANGLE POST SB 25-1289 POST SB 25-1287 used on 001A, 001B, 001C, 001D, 001E, 001F, 001G, 001H, 001J, 001K, 001L, 001M, 001N, 001P, 001Q		001
340A	NAS1096-3-7		. . SCREW POST SB 25-1289 POST SB 25-1287 BUY PN NAS1801-3-7 used on 001A, 001B, 001C, 001D, 001E, 001F, 001G, 001H, 001J, 001K, 001L, 001M, 001N, 001P, 001Q		004
350A	NAS1096-3-5		. . SCREW POST SB 25-1289 POST SB 25-1287 BUY PN NAS1801-3-5 used on 001A, 001B, 001C, 001D, 001E, 001F, 001G, 001H, 001J, 001K, 001L, 001M, 001N, 001P, 001Q		005
360A	A2547577004800		. . DISPENSER-TOILET SEAT COVER used on 001D, 001G, 001H, 001N, 001P, 001Q A254-75770-048-00		001
370A	NAS1100-08-4		. . SCREW used on 001D, 001G, 001H, 001N, 001P, 001Q		002

- ITEM NOT ILLUSTRATED

FIG. ITEM	PART NUMBER	AIRLINE STOCK NUMBER	NOMENCLATURE 1234567	EFF CODE	UNITS PER ASSY
380A	A225400208-000		. . DEVICE ASSY-EMERGENCY UNLOCKING,SINGLE DOOR POST SB 25-1316 used on 001A, 001B, 001C, 001D, 001E, 001F, 001G, 001J, 001L, 001M, 001Q		001
390A	A225400208-200		. . . HOUSING-EMERGENCY UN-LOCKING DEVICE used on 380A		001
400A	A225400208-204		. . . STRIKE-EMERGENCY UN-LOCKING DEVICE used on 380A		001
410A	A225400208-202		. . . PIVOT-EMERGENCY UN-LOCKING DEVICE used on 380A		001
420A	A225400208-210		. . . PIN used on 380A		001
430A	SM1275-1KNM04		. . . CATCH-SNAP used on 380A		001
440A	A225400208-208		. . . BOLT used on 380A		001
450A	A225400221-202		. . PLATE POST SB 25-1316 used on 001A, 001B, 001C, 001D, 001E, 001F, 001G, 001J, 001L, 001M, 001Q		002
460A	NAS514P832-7		. . SCREW POST SB 25-1316 used on 001A, 001B, 001C, 001D, 001E, 001F, 001G, 001J, 001L, 001M, 001Q		002

- ITEM NOT ILLUSTRATED

FIG. ITEM	PART NUMBER	AIRLINE STOCK NUMBER	NOMENCLATURE 1234567	EFF CODE	UNITS PER ASSY
461A	NAS514P832-7		. . SCREW POST SB 25-1316 used on 001A, 001B, 001C, 001D, 001E, 001F, 001G, 001J, 001L, 001M, 001Q		004
470A	NSA5067-08-1		. . NUT POST SB 25-1316 used on 001A, 001B, 001C, 001D, 001E, 001F, 001G, 001J, 001L, 001M, 001Q		002
480A	A2547380206000		. . SUPPORT used on 001J		001
490A	NAS1096-2-7		. . SCREW BUY PN NAS1801-08-7 used on 001J		002
500A	NAS1149CN832R		. . WASHER used on 001J		002
-510A	A225400231-362		. . STRIP-REINFORCING USE AS REQUIRED POST SB 25-1314 used on 001D, 001F, 001G, 001H, 001J, 001L, 001M, 001P, 001Q		AR
-520A	A225400216-314		. . STRIP-KICK POST VSB A2-254-25-032 used on 001P, 001Q		001

- ITEM NOT ILLUSTRATED

THIS PAGE IS INTENTIONALLY LEFT BLANK

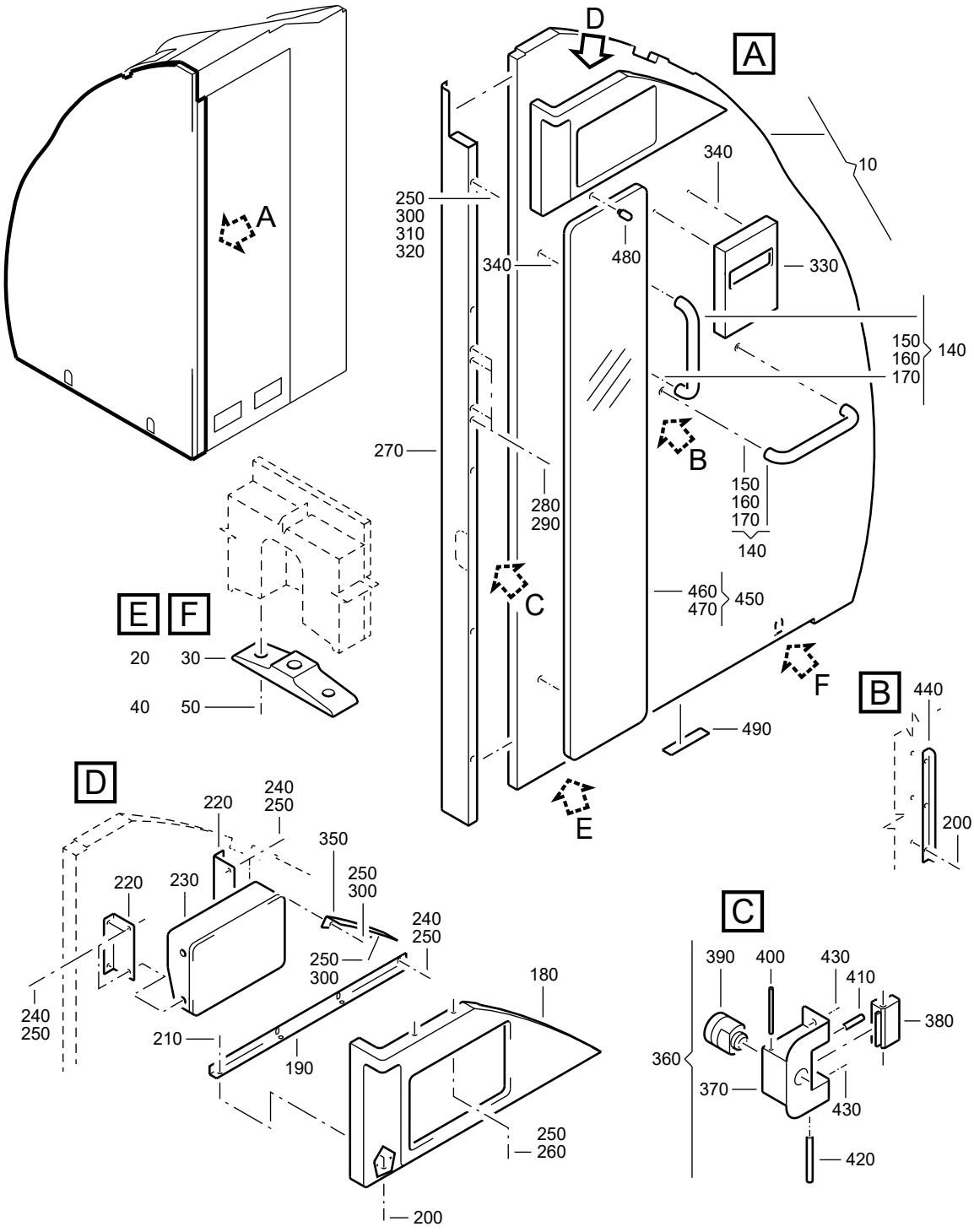

F_PL_254151_48_F_01_00

WALL-SIDE
Figure 48F/EN254151SHEET48F01

FIG. ITEM	PART NUMBER	AIRLINE STOCK NUMBER	NOMENCLATURE 1234567		EFF CODE	UNITS PER ASSY
48F						
-001A	D2549030410265		. WALL-SIDE PRE VSB A2-254-25-072 used on 040J (25415142F) SEE 25-41-51-42F FOR NHA	NP		RF
-001B	D2549020412865		. WALL-SIDE used on 040L (25415142R) SEE 25-41-51-42R FOR NHA	NP		RF
-001C	D2549020300065		. WALL-SIDE used on 040B (25415142T) SEE 25-41-51-42T FOR NHA	NP		RF
-001D	D2549020802665		. WALL-SIDE used on 040L (25415141S) SEE 25-41-51-41S FOR NHA	NP		RF
-001E	R22540167500065		. WALL-SIDE POST VSB A2-254-25-072 used on 040M (25415142F) SEE 25-41-51-42F FOR NHA	NP		RF
010A	A225401235-626		. . WALL ASSY-SIDE,AFT PRE VSB A2-254-25-072 used on 001A, 001C			001
-010B	A225401235-708		. . WALL ASSY-SIDE,AFT used on 001B			001
-010C	A2254012348574		. . WALL ASSY-SIDE,AFT POST SB 25-1314 used on 001D			001
-010D	A225401235-748		. . WALL ASSY-SIDE,AFT POST VSB A2-254-25-072 used on 001E			001
020A	A225400232-208		. . . FITTING used on 010A, 010B, 010C, 010D			001

- ITEM NOT ILLUSTRATED

FIG. ITEM	PART NUMBER	AIRLINE STOCK NUMBER	NOMENCLATURE 1234567	EFF CODE	UNITS PER ASSY
030A	A225400232-216		. . . FITTING used on 010A, 010B, 010C, 010D		001
040A	ABS0704-6-50		. . . SCREW used on 010A, 010B, 010C, 010D		002
050A	ABS0705-6-50		. . . SCREW used on 010A, 010B, 010C, 010D		002
-060A	NAS1833C08-370		. . . INSERT PRE VSB A2-254-25-072 used on 010A, 010B, 010C		083
-060B	NAS1833C08-370		. . . INSERT POST VSB A2-254-25-072 used on 010D		087
-070A	NSA5054-08		. . . INSERT used on 010A, 010B, 010C, 010D		002
-080A	NAS1835C08		. . . INSERT used on 010A, 010B, 010C, 010D		009
-090A	NAS1833C3-370		. . . INSERT PRE VSB A2-254-25-072 used on 010A, 010B, 010C		020
-090B	NAS1833C3-370		. . . INSERT POST VSB A2-254-25-072 used on 010D		024
-100A	NSA5054-5		. . . INSERT used on 010A, 010B, 010C, 010D		012
-110A	NSA5054-3		. . . INSERT used on 010A, 010B, 010C, 010D		003
-120A	NSA5054-4		. . . INSERT used on 010A, 010B, 010C, 010D		006

- ITEM NOT ILLUSTRATED

FIG. ITEM	PART NUMBER	AIRLINE STOCK NUMBER	NOMENCLATURE 1234567	EFF CODE	UNITS PER ASSY
-130A	NSA935405-01		. . . MOUNT used on 010A, 010B, 010C, 010D		010
140A	550-33-300MBB		. . HANDLE ASSY used on 001A, 001B, 001C, 001D, 001E		002
150A	S7224		. . . SCREW-SPECIAL used on 140A		002
160A	8534		. . . PIN-SECURITY used on 140A		002
170A	8587		. . . WASHER-SPECIAL used on 140A		002
180A	A225401410-518		. . COVER-OXYGEN CONTAIN-ER ASSY used on 001A, 001C, 001E		001
-180B	A225401410-502		. . COVER-OXYGEN CONTAIN-ER ASSY used on 001B, 001D		001
190A	A225400450-204		. . ANGLE used on 001A, 001B, 001C, 001D, 001E		001
200A	NAS1102-08-5		. . SCREW used on 001A, 001B, 001C, 001D, 001E		007
210A	NSA5067-08-1		. . NUT used on 001A, 001B, 001C, 001D, 001E		004
220A	A225400450-202		. . ANGLE used on 001A, 001B, 001C, 001D, 001E		002

- ITEM NOT ILLUSTRATED

FIG. ITEM	PART NUMBER	AIRLINE STOCK NUMBER	NOMENCLATURE 1234567	EFF CODE	UNITS PER ASSY
230A	G2F212-77		. . CONTAINER ASSY-OXYGEN used on 001A, 001C, 001E		001
-230B	G2F212-85		. . CONTAINER ASSY-OXYGEN PRE VSB A2-254-25-047 used on 001B, 001D		001
-230C	22G150150320400		. . CONTAINER ASSY-OXYGEN POST VSB A2-254-25-047 used on 001B		001
240A	NAS1096-2-5		. . SCREW BUY PN NAS1801-08-5 PRE VSB A2-254-25-047 used on 001A, 001B, 001C, 001D, 001E		008
-240B	NAS1096-2-5		. . SCREW BUY PN NAS1801-08-5 POST VSB A2-254-25-047 used on 001B		004
-245A	NAS1801-08-6		. . SCREW POST VSB A2-254-25-047 used on 001B		004
250A	NAS1149CN832R		. . WASHER used on 001A, 001B, 001C, 001D, 001E		024
260A	A225400451-202		. . STUD used on 001A, 001B, 001C, 001D, 001E		002
270A	A225401222-612		. . POST ASSY used on 001A, 001C, 001E		001
-270B	A225401222-608		. . POST ASSY used on 001B		001

- ITEM NOT ILLUSTRATED

FIG. ITEM	PART NUMBER	AIRLINE STOCK NUMBER	NOMENCLATURE 1234567	EFF CODE	UNITS PER ASSY
-270C	A225401222-500		. . POST ASSY used on 001D		001
280A	NAS514P832-4		. . . SCREW used on 270A, 270B, 270C		004
290A	NAS1068A08		. . . NUT BUY PN MS21075L08 used on 270A, 270B, 270C		004
300A	NAS1096-2-7		. . SCREW BUY PN NAS1801-08-7 used on 001A, 001B, 001C, 001D, 001E		014
310A	2634DP437-110		. . CAP used on 001A, 001B, 001C, 001D, 001E		005
320A	NAS1096-3-9		. . SCREW BUY PN NAS1801-3-9 used on 001A, 001B, 001C, 001D, 001E		001
330A	A2547577008200		. . DISPENSER-TOILET SEAT COVER used on 001A, 001C, 001E		001
-330B	A2547577004800		. . DISPENSER-TOILET SEAT COVER used on 001B, 001D A254-75770-048-00		001
340A	NAS1100-08-4		. . SCREW used on 001A, 001B, 001C, 001D, 001E		005
350A	A225401236-200		. . ANGLE used on 001A, 001B, 001C, 001D, 001E		001

- ITEM NOT ILLUSTRATED

FIG. ITEM	PART NUMBER	AIRLINE STOCK NUMBER	NOMENCLATURE 1234567	EFF CODE	UNITS PER ASSY
360A	A225400208-000		. . DEVICE ASSY-EMERGENCY UNLOCKING,SINGLE DOOR used on 001A, 001B, 001C, 001E		001
370A	A225400208-200		. . . HOUSING-EMERGENCY UN-LOCKING DEVICE used on 360A		001
380A	A225400208-204		. . . STRIKE-EMERGENCY UN-LOCKING DEVICE used on 360A		001
390A	A225400208-202		. . . PIVOT-EMERGENCY UN-LOCKING DEVICE used on 360A		001
400A	A225400208-210		. . . PIN used on 360A		001
410A	SM1275-1KNM04		. . . CATCH-SNAP used on 360A		001
420A	A225400208-208		. . . BOLT used on 360A		001
430A	NAS514P832-7		. . SCREW used on 001A, 001B, 001C, 001D, 001E		002
440A	A325400471-500		. . SECTION used on 001B		001
-440B	A325400471-506		. . SECTION used on 001A, 001C, 001E		001
450A	A225400470-008		. . MIRROR ASSY used on 001A, 001B, 001C, 001E		001
460A	A225400470-208		. . . MIRROR used on 450A		001

- ITEM NOT ILLUSTRATED

FIG. ITEM	PART NUMBER	AIRLINE STOCK NUMBER	NOMENCLATURE 1234567	EFF CODE	UNITS PER ASSY
470A	A225400470-108		. . . PANEL-MIRROR used on 450A		001
480A	A225400451-200		. . STUD used on 001A, 001B, 001C, 001D, 001E		001
490A	A225400231-362		. . STRIP-REINFORCING POST SB 25-1314 used on 001D		001

- ITEM NOT ILLUSTRATED

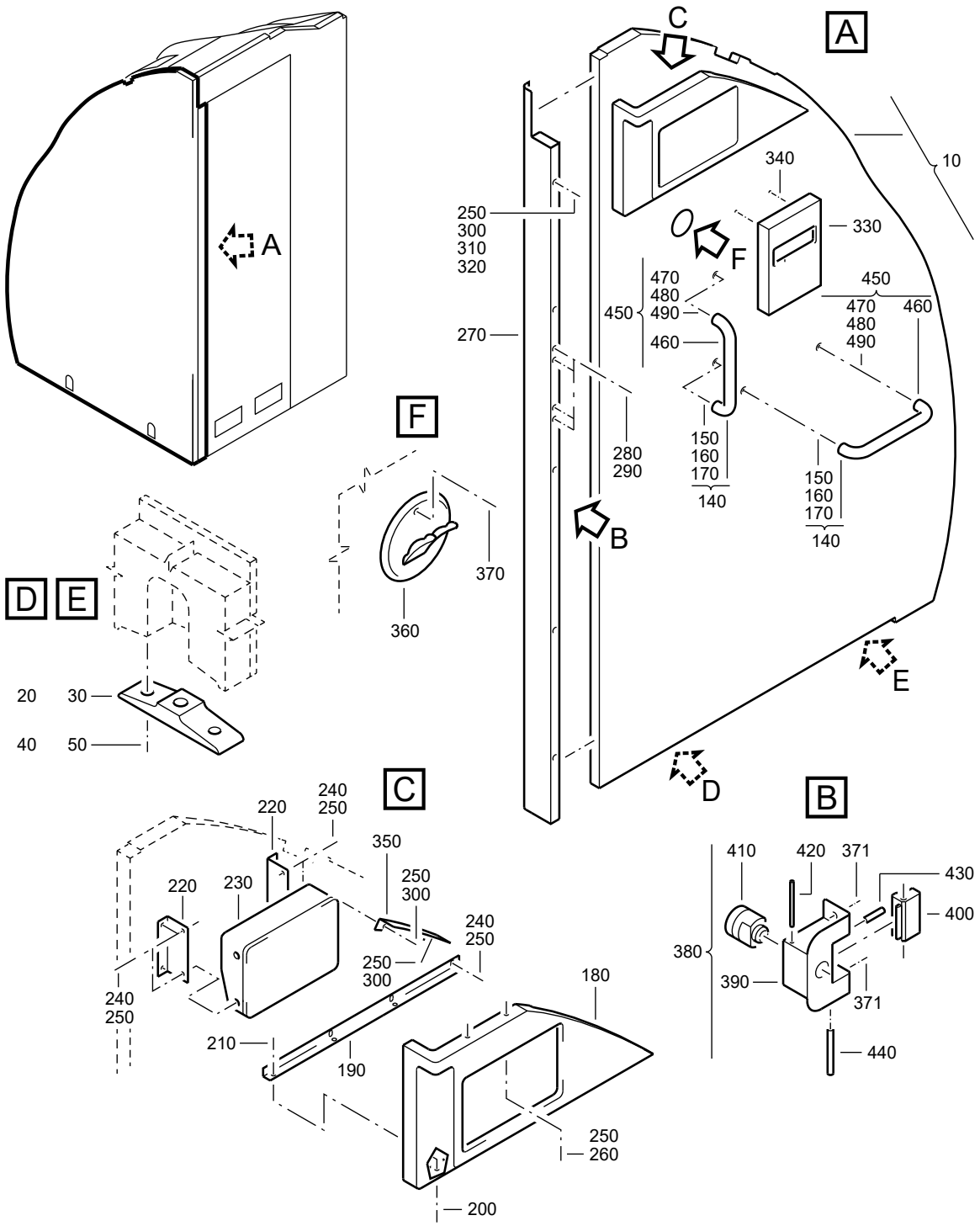

F_PL_254151_48_G_01_00

WALL-SIDE
Figure 48G/EN254151SHEET48G01

FIG. ITEM	PART NUMBER	AIRLINE STOCK NUMBER	NOMENCLATURE 1234567	EFF CODE	UNITS PER ASSY
48G					
-001A	D2549030410065		. WALL-SIDE NP used on 040L (25415142F), 040B (25415142H) SEE 25-41-51-42F FOR NHA SEE 25-41-51-42H FOR NHA		RF
-001B	D2549030409665		. WALL-SIDE NP PRE VSB A2-254-25-052 used on 040B (25415142G), 040D (25415142N), 040G (25415142S) SEE 25-41-51-42G FOR NHA SEE 25-41-51-42N FOR NHA SEE 25-41-51-42S FOR NHA		RF
-001C	D2549040500665		. WALL-SIDE NP PRE VSB A2-254-25-080 used on 040C (25415142G) SEE 25-41-51-42G FOR NHA		RF
-001D	D2549020400865		. WALL-SIDE NP used on 040G (25415142G) SEE 25-41-51-42G FOR NHA		RF
-001E	D2549030408665		. WALL-SIDE NP used on 040H (25415142G) SEE 25-41-51-42G FOR NHA		RF
-001F	D2549020403465		. WALL-SIDE NP used on 040J (25415142E), 040D (25415142P) SEE 25-41-51-42E FOR NHA SEE 25-41-51-42P FOR NHA		RF
-001G	D2549020402265		. WALL-SIDE NP used on 040J (25415142G) SEE 25-41-51-42G FOR NHA		RF

- ITEM NOT ILLUSTRATED

FIG. ITEM	PART NUMBER	AIRLINE STOCK NUMBER	NOMENCLATURE 1234567		EFF CODE	UNITS PER ASSY
-001H	D2549010610665		. WALL-SIDE used on 040L (25415142E), 040H (25415142J), 040K(25415142K), 040B (25415142N) SEE 25-41-51-42E FOR NHA SEE 25-41-51-42J FOR NHA SEE 25-41-51-42K FOR NHA SEE 25-41-51-42N FOR NHA	NP		RF
-001J	D2549020403265		. WALL-SIDE used on 040L (25415142G), 040G (25415142H), 040M (25415142L) SEE 25-41-51-42G FOR NHA SEE 25-41-51-42H FOR NHA SEE 25-41-51-42L FOR NHA	NP		RF
-001K	D2549030409465		. WALL-SIDE used on 040A (25415142H) SEE 25-41-51-42H FOR NHA	NP		RF
-001L	D2549010401065		. WALL-SIDE used on 040C (25415142H), 040J (25415142M) SEE 25-41-51-42H FOR NHA SEE 25-41-51-42M FOR NHA	NP		RF
-001M	D2549020809665		. WALL-SIDE used on 040D (25415142H) SEE 25-41-51-42H FOR NHA	NP		RF
-001N	D2549020408265		. WALL-SIDE used on 040F (25415142K) SEE 25-41-51-42K FOR NHA	NP		RF
-001P	R22540167300065		. WALL-SIDE POST VSB A2-254-25-080 used on 040P (25415142G) SEE 25-41-51-42G FOR NHA	NP		RF

- ITEM NOT ILLUSTRATED

FIG. ITEM	PART NUMBER	AIRLINE STOCK NUMBER	NOMENCLATURE 1234567	EFF CODE	UNITS PER ASSY
-001Q	R22540167100065		. WALL-SIDE NP POST VSB A2-254-25-052 used on 040Q (25415142N), 040Q (25415142S) SEE 25-41-51-42N FOR NHA SEE 25-41-51-42S FOR NHA		RF
010A	A225401235-622		. . WALL ASSY-SIDE,AFT used on 001A, 001N		001
-010B	A225401234-610		. . WALL ASSY-SIDE,AFT used on 001B, 001Q		001
-010C	A225401234-602		. . WALL ASSY-SIDE,AFT used on 001C, 001P		001
-010D	A225401235-606		. . WALL ASSY-SIDE,AFT used on 001D		001
-010E	A225401235-596		. . WALL ASSY-SIDE,AFT used on 001E		001
-010F	A225401235-620		. . WALL ASSY-SIDE,AFT used on 001F		001
-010G	A225401235-612		. . WALL ASSY-SIDE,AFT used on 001G		001
-010H	A225401235-616		. . WALL ASSY-SIDE,AFT used on 001H		001
-010J	A225401235-634		. . WALL ASSY-SIDE,AFT used on 001J		001
-010K	A225401235-628		. . WALL ASSY-SIDE,AFT used on 001K		001
-010L	A225401235-630		. . WALL ASSY-SIDE,AFT used on 001L		001

- ITEM NOT ILLUSTRATED

FIG. ITEM	PART NUMBER	AIRLINE STOCK NUMBER	NOMENCLATURE 1234567	EFF CODE	UNITS PER ASSY
-010M	A225401235-638		. . WALL ASSY-SIDE,AFT used on 001M		001
020A	A225400232-208		. . . FITTING used on 010A, 010B, 010C, 010D, 010E, 010F, 010G, 010H, 010J, 010K, 010L, 010M		001
030A	A225400232-216		. . . FITTING used on 010A, 010B, 010C, 010D, 010E, 010F, 010G, 010H, 010J, 010K, 010L, 010M		001
040A	ABS0704-6-50		. . . SCREW used on 010A, 010B, 010C, 010D, 010E, 010F, 010G, 010H, 010J, 010K, 010L, 010M		002
050A	ABS0705-6-50		. . . SCREW used on 010A, 010B, 010C, 010D, 010E, 010F, 010G, 010H, 010J, 010K, 010L, 010M		002
-060A	NAS1833C08-370		. . . INSERT used on 010A, 010B, 010C, 010D, 010E, 010F, 010G, 010H, 010J, 010K, 010L, 010M		083
-070A	NSA5054-08		. . . INSERT used on 010A, 010B, 010C, 010D, 010E, 010F, 010G, 010H, 010J, 010K, 010L, 010M		002
-080A	NAS1835C08		. . . INSERT used on 010A, 010B, 010C, 010D, 010E, 010F, 010G, 010H, 010J, 010K, 010L, 010M		009

- ITEM NOT ILLUSTRATED

FIG. ITEM	PART NUMBER	AIRLINE STOCK NUMBER	NOMENCLATURE 1234567	EFF CODE	UNITS PER ASSY
-090A	NAS1833C3-370		. . . INSERT used on 010A, 010B, 010C, 010D, 010E, 010F, 010G, 010H, 010J, 010K, 010L, 010M		020
-100A	NSA5054-5		. . . INSERT used on 010A, 010B, 010C, 010D, 010E, 010F, 010G, 010H, 010J, 010K, 010L, 010M		012
-110A	NSA5054-3		. . . INSERT used on 010A, 010B, 010C, 010D, 010E, 010F, 010G, 010H, 010J, 010K, 010L, 010M		003
-120A	NSA5054-4		. . . INSERT used on 010A, 010B, 010C, 010D, 010E, 010F, 010G, 010H, 010J, 010K, 010L, 010M		006
-130A	NSA935405-01		. . . MOUNT used on 010A, 010B, 010C, 010D, 010E, 010F, 010G, 010H, 010J, 010K, 010L, 010M		010
140A	550-33-300MBB		. . HANDLE ASSY used on 001A, 001C, 001D, 001E, 001F, 001G, 001H, 001J, 001K, 001L, 001M, 001N, 001P		002
150A	S7224		. . . SCREW-SPECIAL used on 140A		002
160A	8534		. . . PIN-SECURITY used on 140A		002
170A	8587		. . . WASHER-SPECIAL used on 140A		002

- ITEM NOT ILLUSTRATED

FIG. ITEM	PART NUMBER	AIRLINE STOCK NUMBER	NOMENCLATURE 1234567	EFF CODE	UNITS PER ASSY
180A	A225401410-502		. . COVER-OXYGEN CONTAIN-ER ASSY used on 001A, 001C, 001D, 001F, 001G, 001H, 001J, 001L, 001M, 001N, 001P		001
-180B	A225401410-518		. . COVER-OXYGEN CONTAIN-ER ASSY used on 001B, 001E, 001K, 001Q		001
190A	A225400450-204		. . ANGLE used on 001A, 001B, 001C, 001D, 001E, 001F, 001G, 001H, 001J, 001K, 001L, 001M, 001N, 001P, 001Q		001
200A	NAS1102-08-5		. . SCREW used on 001A, 001B, 001C, 001D, 001E, 001F, 001G, 001H, 001J, 001K, 001L, 001M, 001N, 001P, 001Q		004
210A	NSA5067-08-1		. . NUT used on 001A, 001B, 001C, 001D, 001E, 001F, 001G, 001H, 001J, 001K, 001L, 001M, 001N, 001P, 001Q		004
220A	A225400450-202		. . ANGLE used on 001A, 001B, 001C, 001D, 001E, 001F, 001G, 001H, 001J, 001K, 001L, 001M, 001N, 001P, 001Q		002
230A	22C150150320004		. . CONTAINER ASSY-OXYGEN PRE VSB A2-254-25-080 PRE VSB A2-254-25-093 used on 001A, 001C, 001G, 001J, 001L		001

- ITEM NOT ILLUSTRATED

FIG. ITEM	PART NUMBER	AIRLINE STOCK NUMBER	NOMENCLATURE 1234567	EFF CODE	UNITS PER ASSY
-230B	G2F212-77		. . CONTAINER ASSY-OXYGEN PRE VSB A2-254-25-052 used on 001B, 001E, 001K		001
-230C	G2F212-85		. . CONTAINER ASSY-OXYGEN PRE VSB A2-254-25-047 used on 001D, 001H, 001M, 001N		001
-230D	E2F212-85		. . CONTAINER ASSY-OXYGEN PRE VSB A2-254-25-069 PRE VSB A2-254-25-100 used on 001F		001
-230E	22G150150320400		. . CONTAINER ASSY-OXYGEN POST VSB A2-254-25-047 POST VSB A2-254-25-080 POST VSB A2-254-25-093 used on 001H, 001L, 001P		001
-230F	22G150150460400		. . CONTAINER ASSY-OXYGEN POST VSB A2-254-25-052 used on 001Q		001
-230G	22G220150320400		. . CONTAINER ASSY-OXYGEN POST VSB A2-254-25-069 POST VSB A2-254-25-100 used on 001F		001
240A	NAS1096-2-5		. . SCREW PRE VSB A2-254-25-047 PRE VSB A2-254-25-052 PRE VSB A2-254-25-069 PRE VSB A2-254-25-080 PRE VSB A2-254-25-093 PRE VSB A2-254-25-100 BUY PN NAS1801-08-5 used on 001A, 001B, 001C, 001D, 001E, 001F, 001G, 001H, 001J, 001K, 001L, 001M, 001N		008

- ITEM NOT ILLUSTRATED

FIG. ITEM	PART NUMBER	AIRLINE STOCK NUMBER	NOMENCLATURE 1234567	EFF CODE	UNITS PER ASSY
-240B	NAS1096-2-5		. . SCREW POST VSB A2-254-25-047 POST VSB A2-254-25-052 POST VSB A2-254-25-069 POST VSB A2-254-25-080 POST VSB A2-254-25-093 POST VSB A2-254-25-100 BUY PN NAS1801-08-5 used on 001F, 001H, 001L, 001P, 001Q		004
-242A	NAS1801-08-6		. . SCREW POST VSB A2-254-25-047 POST VSB A2-254-25-052 POST VSB A2-254-25-069 POST VSB A2-254-25-080 POST VSB A2-254-25-093 POST VSB A2-254-25-100 used on 001F, 001H, 001L, 001P, 001Q		004
250A	NAS1149CN832R		. . WASHER used on 001A, 001B, 001C, 001D, 001E, 001F, 001G, 001H, 001J, 001K, 001L, 001M, 001N, 001P, 001Q		024
260A	A225400451-202		. . STUD used on 001A, 001B, 001C, 001D, 001E, 001F, 001G, 001H, 001J, 001K, 001L, 001M, 001N, 001P, 001Q		002
270A	A225401222-604		. . POST ASSY used on 001A, 001G, 001M, 001N		001
-270B	A225401222-610		. . POST ASSY used on 001B, 001F, 001Q		001

- ITEM NOT ILLUSTRATED

FIG. ITEM	PART NUMBER	AIRLINE STOCK NUMBER	NOMENCLATURE 1234567	EFF CODE	UNITS PER ASSY
-270C	A225401222-500		. . POST ASSY used on 001C, 001P		001
-270D	A225401222-602		. . POST ASSY used on 001D		001
-270E	A225401222-540		. . POST ASSY used on 001E		001
-270F	A225401222-608		. . POST ASSY used on 001H		001
-270G	A225401222-618		. . POST ASSY used on 001J		001
-270H	A225401222-614		. . POST ASSY used on 001K		001
-270J	A225401222-616		. . POST ASSY used on 001L		001
280A	NAS514P832-4		. . . SCREW used on 270A, 270B, 270C, 270D, 270E, 270F, 270G,270H, 270J		004
290A	NAS1068A08		. . . NUT BUY PN MS21075L08 used on 270A, 270B, 270C, 270D, 270E, 270F, 270G,270H, 270J		004
300A	NAS1096-2-7		. . SCREW BUY PN NAS1801-08-7 used on 001A, 001B, 001C, 001D, 001E, 001F, 001G, 001H, 001J, 001K, 001L, 001M, 001N, 001P, 001Q		014

- ITEM NOT ILLUSTRATED

FIG. ITEM	PART NUMBER	AIRLINE STOCK NUMBER	NOMENCLATURE 1234567	EFF CODE	UNITS PER ASSY
310A	2634DP437-110		. . CAP used on 001A, 001B, 001C, 001D, 001E, 001F, 001G, 001H, 001J, 001K, 001L, 001M, 001N, 001P, 001Q		005
320A	NAS1096-3-9		. . SCREW BUY PN NAS1801-3-9 used on 001A, 001B, 001C, 001D, 001E, 001F, 001G, 001H, 001J, 001K, 001L, 001M, 001N, 001P, 001Q		001
330A	A2547577004800		. . DISPENSER-TOILET SEAT COVER used on 001A, 001C, 001D, 001G, 001H, 001J, 001N, 001P A254-75770-048-00		001
340A	NAS1100-08-4		. . SCREW used on 001A, 001C, 001D, 001G, 001H, 001J, 001N, 001P		002
350A	A225401236-200		. . ANGLE used on 001A, 001B, 001C, 001D, 001E, 001F, 001G, 001H, 001J, 001K, 001L, 001M, 001N, 001P, 001Q		001
360A	AR197-3		. . HOOK-COAT used on 001A, 001D, 001N		001
370A	NAS514P832-7		. . SCREW used on 001A, 001D, 001N		001
371A	NAS514P832-7		. . SCREW used on 001A, 001B, 001C, 001D, 001E, 001F, 001G, 001H, 001J, 001K, 001L, 001M, 001N, 001P, 001Q		002

- ITEM NOT ILLUSTRATED

FIG. ITEM	PART NUMBER	AIRLINE STOCK NUMBER	NOMENCLATURE 1234567	EFF CODE	UNITS PER ASSY
380A	A225400208-000		. . DEVICE ASSY-EMERGENCY UNLOCKING,SINGLE DOOR used on 001A, 001B, 001C, 001D, 001F, 001G, 001H, 001J, 001K, 001L, 001M, 001N, 001P, 001Q		001
390A	A225400208-200		. . . HOUSING-EMERGENCY UN-LOCKING DEVICE used on 380A		001
400A	A225400208-204		. . . STRIKE-EMERGENCY UN-LOCKING DEVICE used on 380A		001
410A	A225400208-202		. . . PIVOT-EMERGENCY UN-LOCKING DEVICE used on 380A		001
420A	A225400208-210		. . . PIN used on 380A		001
430A	SM1275-1KNM04		. . . CATCH-SNAP used on 380A		001
440A	A225400208-208		. . . BOLT used on 380A		001
450A	A425400488-062		. . HANDLE ASSY used on 001B, 001Q		002
460A	A425400488-262		. . . HANDLE used on 450A		001
470A	33767		. . . SCREW used on 450A		002
480A	33723		. . . WASHER used on 450A		002

- ITEM NOT ILLUSTRATED

FIG. ITEM	PART NUMBER	AIRLINE STOCK NUMBER	NOMENCLATURE 1234567	EFF CODE	UNITS PER ASSY
490A	500845		. . . SETSCREW used on 450A		002

- ITEM NOT ILLUSTRATED

THIS PAGE IS INTENTIONALLY LEFT BLANK

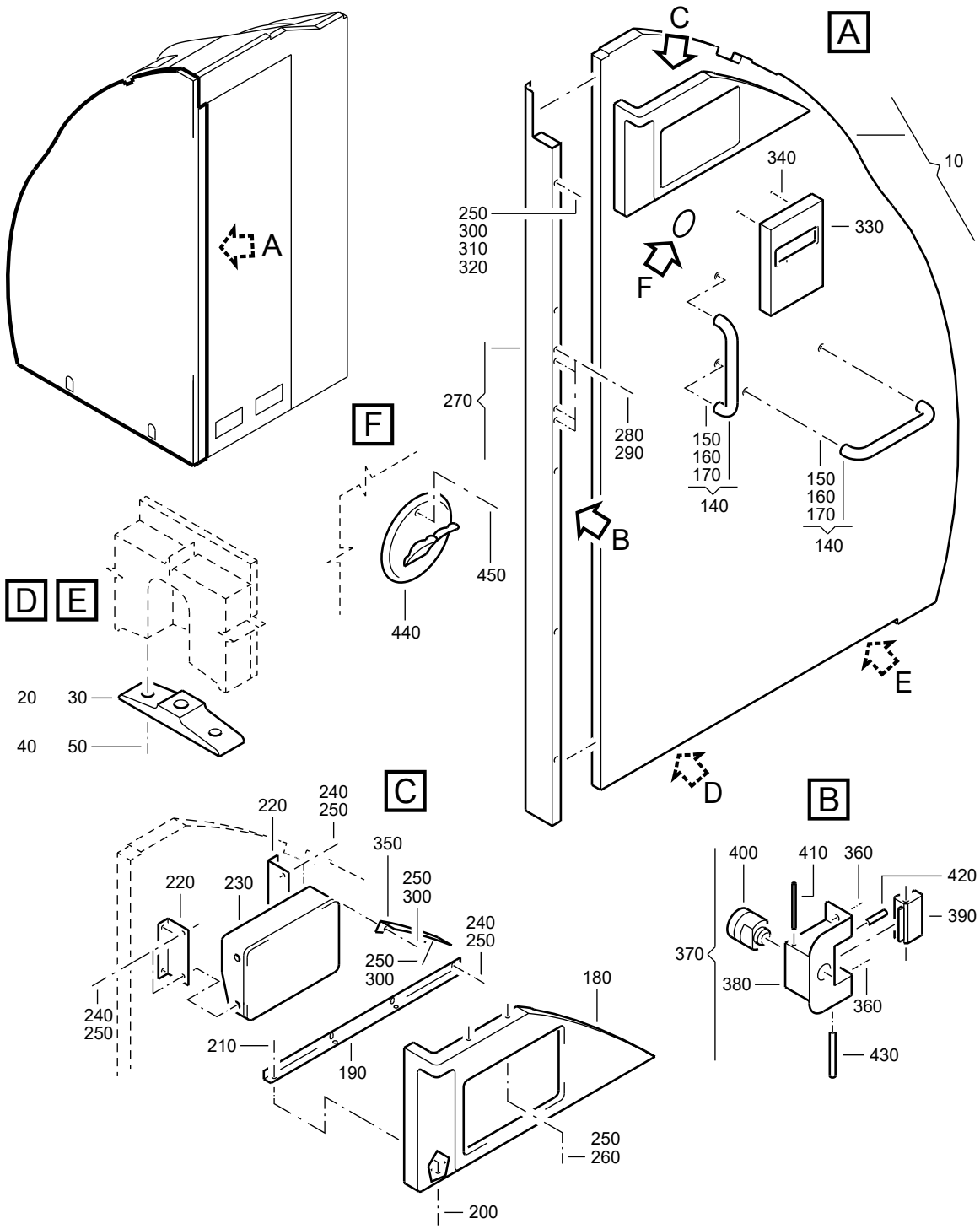

F_PL_254151_48_H_01_00

WALL-SIDE
Figure 48H/EN254151SHEET48H01

FIG. ITEM	PART NUMBER	AIRLINE STOCK NUMBER	NOMENCLATURE 1234567	EFF CODE	UNITS PER ASSY
48H					
-001A	D2549020402065		. WALL-SIDE NP used on 040A (25415142J), 040H (25415142P) SEE 25-41-51-42J FOR NHA SEE 25-41-51-42P FOR NHA		RF
-001B	D2549020401665		. WALL-SIDE NP used on 040L (25415142H) SEE 25-41-51-42H FOR NHA		RF
-001C	D2549020406865		. WALL-SIDE NP PRE VSB A2-254-25-080 used on 040A (25415142K) SEE 25-41-51-42K FOR NHA		RF
-001D	D2549030410665		. WALL-SIDE NP used on 040B (25415142K) SEE 25-41-51-42K FOR NHA		RF
-001E	D2549020408865		. WALL-SIDE NP used on 040C (25415142K) SEE 25-41-51-42K FOR NHA		RF
-001F	D2549020406665		. WALL-SIDE NP used on 040D (25415142K), 040F (25415142Q), 040C(25415142S) SEE 25-41-51-42K FOR NHA SEE 25-41-51-42Q FOR NHA SEE 25-41-51-42S FOR NHA		RF
-001G	D2549020407265		. WALL-SIDE NP used on 040D (25415142J), 040G (25415142K) SEE 25-41-51-42J FOR NHA SEE 25-41-51-42K FOR NHA		RF

- ITEM NOT ILLUSTRATED

FIG. ITEM	PART NUMBER	AIRLINE STOCK NUMBER	NOMENCLATURE 1234567		EFF CODE	UNITS PER ASSY
-001H	D2549020401465		. WALL-SIDE PRE VSB A2-254-25-054 used on 040L (25415142K), 040D (25415142S) SEE 25-41-51-42K FOR NHA SEE 25-41-51-42S FOR NHA	NP		RF
-001J	D2549020402465		. WALL-SIDE used on 040B (25415142L) SEE 25-41-51-42L FOR NHA	NP		RF
-001K	D2549030412265		. WALL-SIDE used on 040D (25415142L), 040J (25415142S) SEE 25-41-51-42L FOR NHA SEE 25-41-51-42S FOR NHA	NP		RF
-001L	D2549020408665		. WALL-SIDE used on 040E (25415142L), 040C (25415142M), 040D(25415142R), 040F (25415142T) SEE 25-41-51-42L FOR NHA SEE 25-41-51-42M FOR NHA SEE 25-41-51-42R FOR NHA SEE 25-41-51-42T FOR NHA	NP		RF
-001M	D2549030412665		. WALL-SIDE PRE VSB A2-254-25-045 used on 040F (25415142L), 040H (25415142M) SEE 25-41-51-42L FOR NHA SEE 25-41-51-42M FOR NHA	NP		RF
-001N	D2549020411465		. WALL-SIDE used on 040E (25415142P) SEE 25-41-51-42P FOR NHA	NP		RF

- ITEM NOT ILLUSTRATED

FIG. ITEM	PART NUMBER	AIRLINE STOCK NUMBER	NOMENCLATURE 1234567	EFF CODE	UNITS PER ASSY
-001P	R22540162700065		. WALL-SIDE NP POST VSB A2-254-25-054 used on 040N (25415142K), 040P (25415142S) SEE 25-41-51-42K FOR NHA SEE 25-41-51-42S FOR NHA		RF
-001Q	R22540164600265		. WALL-SIDE NP POST VSB A2-254-25-080 used on 040P (25415142K) SEE 25-41-51-42K FOR NHA		RF
-001R	R22540161101465		. WALL-SIDE NP POST VSB A2-254-25-045 used on 040N (25415142L), 040N (25415142M) SEE 25-41-51-42L FOR NHA SEE 25-41-51-42M FOR NHA		RF
010A	A225401235-642		. . WALL ASSY-SIDE,AFT used on 001A, 001N		001
-010B	A225401235-644		. . WALL ASSY-SIDE,AFT used on 001B		001
-010C	A225401235-646		. . WALL ASSY-SIDE,AFT used on 001C, 001Q		001
-010D	A225401235-716		. . WALL ASSY-SIDE,AFT POST SB 25-1482 used on 001D		001
-010E	A225401235-658		. . WALL ASSY-SIDE,AFT used on 001E		001
-010F	A225401235-650		. . WALL ASSY-SIDE,AFT used on 001F		001
-010G	A225401235-652		. . WALL ASSY-SIDE,AFT used on 001G		001

- ITEM NOT ILLUSTRATED

FIG. ITEM	PART NUMBER	AIRLINE STOCK NUMBER	NOMENCLATURE 1234567	EFF CODE	UNITS PER ASSY
-010H	A225401235-664		. . WALL ASSY-SIDE,AFT used on 001H, 001P		001
-010J	A225401235-666		. . WALL ASSY-SIDE,AFT used on 001J		001
-010K	A225401235-660		. . WALL ASSY-SIDE,AFT used on 001K		001
-010L	A225401235-672		. . WALL ASSY-SIDE,AFT used on 001L		001
-010M	A225401235-656		. . WALL ASSY-SIDE,AFT used on 001M, 001R		001
020A	A225400232-208		. . . FITTING used on 010A, 010B, 010C, 010D, 010E, 010F, 010G, 010H, 010J, 010K, 010L, 010M		001
030A	A225400232-216		. . . FITTING used on 010A, 010B, 010C, 010D, 010E, 010F, 010G, 010H, 010J, 010K, 010L, 010M		001
040A	ABS0704-6-50		. . . SCREW used on 010A, 010B, 010C, 010D, 010E, 010F, 010G, 010H, 010J, 010K, 010L, 010M		002
050A	ABS0705-6-50		. . . SCREW used on 010A, 010B, 010C, 010D, 010E, 010F, 010G, 010H, 010J, 010K, 010L, 010M		002
-060A	NAS1833C08-370		. . . INSERT used on 010A, 010B, 010C, 010D, 010E, 010F, 010G, 010H, 010J, 010K, 010L, 010M		083

- ITEM NOT ILLUSTRATED

FIG. ITEM	PART NUMBER	AIRLINE STOCK NUMBER	NOMENCLATURE 1234567	EFF CODE	UNITS PER ASSY
-070A	NSA5054-08		. . . INSERT used on 010A, 010B, 010C, 010D, 010E, 010F, 010G, 010H, 010J, 010K, 010L, 010M		002
-080A	NAS1835C08		. . . INSERT used on 010A, 010B, 010C, 010D, 010E, 010F, 010G, 010H, 010J, 010K, 010L, 010M		009
-090A	NAS1833C3-370		. . . INSERT used on 010A, 010B, 010C, 010D, 010E, 010F, 010G, 010H, 010J, 010K, 010L, 010M		020
-100A	NSA5054-5		. . . INSERT used on 010A, 010B, 010C, 010D, 010E, 010F, 010G, 010H, 010J, 010K, 010L, 010M		012
-110A	NSA5054-3		. . . INSERT used on 010A, 010B, 010C, 010D, 010E, 010F, 010G, 010H, 010J, 010K, 010L, 010M		003
-120A	NSA5054-4		. . . INSERT used on 010A, 010B, 010C, 010D, 010E, 010F, 010G, 010H, 010J, 010K, 010L, 010M		006
-130A	NSA935405-01		. . . MOUNT used on 010A, 010B, 010C, 010D, 010E, 010F, 010G, 010H, 010J, 010K, 010L, 010M		010
140A	550-33-300MBB		. . HANDLE ASSY used on 001A, 001B, 001C, 001D, 001E, 001F, 001G, 001H, 001J, 001K, 001L, 001M, 001N, 001P, 001Q, 001R		002

- ITEM NOT ILLUSTRATED

FIG. ITEM	PART NUMBER	AIRLINE STOCK NUMBER	NOMENCLATURE 1234567	EFF CODE	UNITS PER ASSY
150A	S7224		. . . SCREW-SPECIAL used on 140A		002
160A	8534		. . . PIN-SECURITY used on 140A		002
170A	8587		. . . WASHER-SPECIAL used on 140A		002
180A	A225401410-502		. . COVER-OXYGEN CONTAIN-ER ASSY used on 001A, 001B, 001C, 001E, 001F, 001G, 001H, 001J, 001L, 001M, 001N, 001P, 001Q, 001R		001
-180B	A225401410-520		. . COVER-OXYGEN CONTAIN-ER ASSY used on 001D		001
-180C	A225401410-522		. . COVER-OXYGEN CONTAIN-ER ASSY used on 001K		001
190A	A225400450-204		. . ANGLE used on 001A, 001B, 001C, 001D, 001E, 001F, 001G, 001H, 001J, 001K, 001L, 001M, 001N, 001P, 001Q, 001R		001
200A	NAS1102-08-5		. . SCREW used on 001A, 001B, 001C, 001D, 001E, 001F, 001G, 001H, 001J, 001K, 001L, 001M, 001N, 001P, 001Q, 001R		004
210A	NSA5067-08-1		. . NUT used on 001A, 001B, 001C, 001D, 001E, 001F, 001G, 001H, 001J, 001K, 001L, 001M, 001N, 001P, 001Q, 001R		004

- ITEM NOT ILLUSTRATED

FIG. ITEM	PART NUMBER	AIRLINE STOCK NUMBER	NOMENCLATURE 1234567	EFF CODE	UNITS PER ASSY
220A	A225400450-202		. . ANGLE used on 001A, 001B, 001C, 001D, 001E, 001F, 001G, 001H, 001J, 001K, 001L, 001M, 001N, 001P, 001Q, 001R		002
230A	G2F212-85		. . CONTAINER ASSY-OXYGEN PRE VSB A2-254-25-054 PRE VSB A2-254-25-045 used on 001A, 001E, 001F, 001H, 001J, 001L, 001M, 001N		001
-230B	22C150150320004		. . CONTAINER ASSY-OXYGEN PRE VSB A2-254-25-057 PRE VSB A2-254-25-080 used on 001B, 001C, 001G		001
-230C	22C220150040004		. . CONTAINER ASSY-OXYGEN used on 001D		001
-230D	G2F212-98		. . CONTAINER ASSY-OXYGEN used on 001K		001
-230E	22G150150320400		. . CONTAINER ASSY-OXYGEN POST VSB A2-254-25-054 POST VSB A2-254-25-057 POST VSB A2-254-25-045 POST VSB A2-254-25-080 used on 001B, 001P, 001Q, 001R		001
240A	NAS1096-2-5		. . SCREW BUY PN NAS1801-08-5 PRE VSB A2-254-25-045 PRE VSB A2-254-25-054 PRE VSB A2-254-25-057 PRE VSB A2-254-25-080 used on 001A, 001B, 001C, 001D, 001E, 001F, 001G, 001H, 001J, 001K, 001L, 001M, 001N		008

- ITEM NOT ILLUSTRATED

FIG. ITEM	PART NUMBER	AIRLINE STOCK NUMBER	NOMENCLATURE 1234567	EFF CODE	UNITS PER ASSY
-240B	NAS1096-2-5		. . SCREW BUY PN NAS1801-08-5 POST VSB A2-254-25-045 POST VSB A2-254-25-054 POST VSB A2-254-25-057 POST VSB A2-254-25-080 used on 001B, 001P, 001Q, 001R		004
-242A	NAS1801-08-6		. . SCREW POST VSB A2-254-25-045 POST VSB A2-254-25-054 POST VSB A2-254-25-057 POST VSB A2-254-25-080 used on 001B, 001P, 001Q, 001R		004
250A	NAS1149CN832R		. . WASHER used on 001A, 001B, 001C, 001D, 001E, 001F, 001G, 001H, 001J, 001K, 001L, 001M, 001N, 001P, 001Q, 001R		024
260A	A225400451-202		. . STUD used on 001A, 001B, 001C, 001D, 001E, 001F, 001G, 001H, 001J, 001K, 001L, 001M, 001N, 001P, 001Q, 001R		002
270A	A225401222-604		. . POST ASSY used on 001A, 001C, 001G, 001J, 001N, 001Q		001
-270B	A225401222-544		. . POST ASSY used on 001B		001
-270C	A225401222-656		. . POST ASSY POST SB 25-1482 used on 001D		001
-270D	A225401222-628		. . POST ASSY used on 001E		001

- ITEM NOT ILLUSTRATED

FIG. ITEM	PART NUMBER	AIRLINE STOCK NUMBER	NOMENCLATURE 1234567	EFF CODE	UNITS PER ASSY
-270E	A225401222-600		. . POST ASSY used on 001F, 001L, 001M, 001R		001
-270F	A225401222-630		. . POST ASSY used on 001H, 001P		001
-270G	A225401222-634		. . POST ASSY used on 001K		001
280A	NAS514P832-4		. . . SCREW used on 270A, 270B, 270C, 270D, 270E, 270F, 270G		004
290A	NAS1068A08		. . . NUT BUY PN MS21075L08 used on 270A, 270B, 270C, 270D, 270E, 270F, 270G		004
300A	NAS1096-2-7		. . SCREW BUY PN NAS1801-08-7 used on 001A, 001B, 001C, 001D, 001E, 001F, 001G, 001H, 001J, 001K, 001L, 001M, 001N, 001P, 001Q, 001R		014
310A	2634DP437-110		. . CAP used on 001A, 001B, 001C, 001D, 001E, 001F, 001G, 001H, 001J, 001K, 001L, 001M, 001N, 001P, 001Q, 001R		005
320A	NAS1096-3-9		. . SCREW BUY PN NAS1801-3-9 used on 001A, 001B, 001C, 001D, 001E, 001F, 001G, 001H, 001J, 001K, 001L, 001M, 001N, 001P, 001Q, 001R		001

- ITEM NOT ILLUSTRATED

FIG. ITEM	PART NUMBER	AIRLINE STOCK NUMBER	NOMENCLATURE 1234567	EFF CODE	UNITS PER ASSY
330A	A2547577004800		. . DISPENSER-TOILET SEAT COVER used on 001A, 001C, 001E, 001F, 001G, 001H, 001P, 001Q A254-75770-048-00		001
-330B	A2547577008000		. . DISPENSER-TOILET SEAT COVER used on 001D		001
-330C	A2547577008800		. . DISPENSER-TOILET SEAT COVER used on 001K		001
340A	NAS1100-08-4		. . SCREW used on 001A, 001C, 001D, 001E, 001F, 001H, 001K, 001P, 001Q		002
350A	A225401236-200		. . ANGLE used on 001A, 001B, 001C, 001D, 001E, 001F, 001G, 001H, 001J, 001K, 001L, 001M, 001N, 001P, 001Q, 001R		001
360A	NAS514P832-7		. . SCREW used on 001A, 001C, 001D, 001E, 001F, 001H, 001J, 001K, 001L, 001M, 001N, 001P, 001Q, 001R		002
370A	A225400208-000		. . DEVICE ASSY-EMERGENCY UNLOCKING,SINGLE DOOR used on 001A, 001C, 001D, 001E, 001F, 001G, 001H, 001J, 001K, 001L, 001M, 001N, 001P, 001Q, 001R		001
380A	A225400208-200		. . . HOUSING-EMERGENCY UN-LOCKING DEVICE used on 370A		001

- ITEM NOT ILLUSTRATED

FIG. ITEM	PART NUMBER	AIRLINE STOCK NUMBER	NOMENCLATURE 1234567	EFF CODE	UNITS PER ASSY
390A	A225400208-204		. . . STRIKE-EMERGENCY UN-LOCKING DEVICE used on 370A		001
400A	A225400208-202		. . . PIVOT-EMERGENCY UN-LOCKING DEVICE used on 370A		001
410A	A225400208-210		. . . PIN used on 370A		001
420A	SM1275-1KNM04		. . . CATCH-SNAP used on 370A		001
430A	A225400208-208		. . . BOLT used on 370A		001
440A	AR197-3		. . HOOK-COAT used on 001D, 001J, 001K		001
450A	NAS514P832-7		. . SCREW used on 001D, 001J, 001K		001

- ITEM NOT ILLUSTRATED

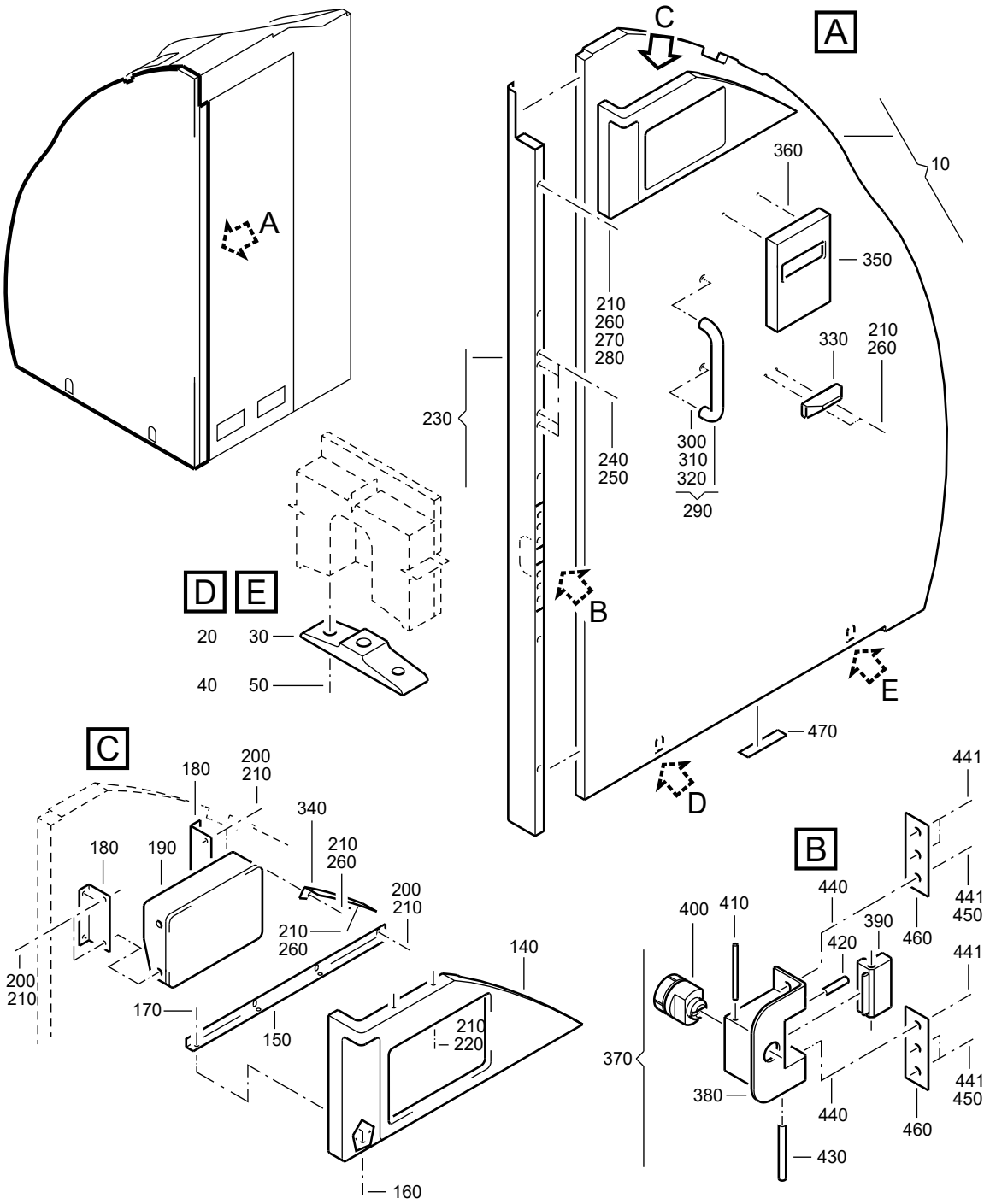

F_PL_254151_48_J_01_00

WALL-SIDE
Figure 48J/EN254151SHEET48J01

FIG. ITEM	PART NUMBER	AIRLINE STOCK NUMBER	NOMENCLATURE 1234567		EFF CODE	UNITS PER ASSY
48J						
-001A	D2549010401465		. WALL-SIDE used on 040C (25415142J) SEE 25-41-51-42J FOR NHA	NP		RF
-001B	D2549030411865		. WALL-SIDE used on 040C (25415142L), 040K (25415142T) SEE 25-41-51-42L FOR NHA SEE 25-41-51-42T FOR NHA	NP		RF
-001C	D2549030411665		. WALL-SIDE used on 040J (25415142L) SEE 25-41-51-42L FOR NHA	NP		RF
-001D	D2549020410265		. WALL-SIDE PRE VSB A2-254-25-032 used on 040K (25415142M) SEE 25-41-51-42M FOR NHA	NP		RF
-001E	D2549030414865		. WALL-SIDE used on 040J (25415142N) SEE 25-41-51-42N FOR NHA	NP		RF
-001F	D2549030700065		. WALL-SIDE PRE VSB A2-254-25-022 PRE VSB A2-254-25-054 used on 040L (25415142N), 040D (25415142T) SEE 25-41-51-42N FOR NHA SEE 25-41-51-42T FOR NHA	NP		RF
-001G	D2549030700665		. WALL-SIDE used on 040C (25415142Q) SEE 25-41-51-42Q FOR NHA	NP		RF
-001H	D2549040501865		. WALL-SIDE used on 040K (25415142Q), 040G (25415142U) SEE 25-41-51-42Q FOR NHA SEE 25-41-51-42U FOR NHA	NP		RF

- ITEM NOT ILLUSTRATED

FIG. ITEM	PART NUMBER	AIRLINE STOCK NUMBER	NOMENCLATURE 1234567		EFF CODE	UNITS PER ASSY
-001J	D2549030702865		. WALL-SIDE used on 040C (25415142T) SEE 25-41-51-42T FOR NHA	NP		RF
-001K	D2549030703065		. WALL-SIDE used on 040F (25415142U) SEE 25-41-51-42U FOR NHA	NP		RF
-001L	D2549010501065		. WALL-SIDE used on 040G (25415141T) SEE 25-41-51-41T FOR NHA	NP		RF
-001M	D2549020500265		. WALL-SIDE used on 040H (25415141T) SEE 25-41-51-41T FOR NHA	NP		RF
-001N	R22540169700065		. WALL-SIDE POST VSB A2-254-25-022 used on 040P (25415142N) SEE 25-41-51-42N FOR NHA	NP		RF
-001P	D2549020410265		. WALL-SIDE POST VSB A2-254-25-032 used on 040L (25415142M) SEE 25-41-51-42M FOR NHA	NP		RF
-001Q	R22540169700265		. WALL-SIDE POST VSB A2-254-25-054 used on 040P (25415142T) SEE 25-41-51-42M FOR NHA	NP		RF
010A	A225401235-648		. . WALL ASSY-SIDE,AFT used on 001A			001
-010B	A225401235-662		. . WALL ASSY-SIDE,AFT used on 001B			001
-010C	A225401235-670		. . WALL ASSY-SIDE,AFT used on 001C, 001E			001

- ITEM NOT ILLUSTRATED

FIG. ITEM	PART NUMBER	AIRLINE STOCK NUMBER	NOMENCLATURE 1234567	EFF CODE	UNITS PER ASSY
-010D	A225401235-692		. . WALL ASSY-SIDE,AFT used on 001D, 001P		001
-010E	A225401234-624		. . WALL ASSY-SIDE,AFT PRE VSB A2-254-25-022 used on 001F, 001Q		001
-010F	A225401234-626		. . WALL ASSY-SIDE,AFT used on 001G		001
-010G	A225401234-634		. . WALL ASSY-SIDE,AFT used on 001H		001
-010H	A225401234-654		. . WALL ASSY-SIDE,AFT used on 001J		001
-010J	A225401234-658		. . WALL ASSY-SIDE,AFT used on 001K		001
-010K	A2254012318512		. . WALL ASSY-SIDE,AFT POST SB 25-1314 used on 001L		001
-010L	A2254012318506		. . WALL ASSY-SIDE,AFT POST SB 25-1314 used on 001M		001
-010M	A225401235-746		. . WALL ASSY-SIDE,AFT POST VSB A2-254-25-022 used on 001N		001
020A	A225400232-208		. . . FITTING used on 010A, 010B, 010C, 010D, 010E, 010F, 010G, 010H, 010J, 010K, 010L, 010M		001
030A	A225400232-216		. . . FITTING used on 010A, 010B, 010C, 010D, 010E, 010F, 010G, 010H, 010J, 010K, 010L, 010M		001

- ITEM NOT ILLUSTRATED

FIG. ITEM	PART NUMBER	AIRLINE STOCK NUMBER	NOMENCLATURE 1234567	EFF CODE	UNITS PER ASSY
040A	ABS0704-6-50		. . . SCREW used on 010A, 010B, 010C, 010D, 010E, 010F, 010G, 010H, 010J, 010K, 010L, 010M		002
050A	ABS0705-6-50		. . . SCREW used on 010A, 010B, 010C, 010D, 010E, 010F, 010G, 010H, 010J, 010K, 010L, 010M		002
-060A	NAS1833C08-370		. . . INSERT used on 010A, 010B, 010C, 010D, 010E, 010F, 010G, 010H, 010J, 010K, 010L, 010M		085
-070A	NSA5054-08		. . . INSERT used on 010A, 010B, 010C, 010D, 010E, 010F, 010G, 010H, 010J, 010K, 010L, 010M		002
-080A	NAS1835C08		. . . INSERT used on 010A, 010B, 010C, 010D, 010E, 010F, 010G, 010H, 010J, 010K, 010L, 010M		008
-090A	NAS1833C3-370		. . . INSERT used on 010A, 010B, 010C, 010D, 010E, 010F, 010G, 010H, 010J, 010K, 010L, 010M		024
-100A	NSA5054-5		. . . INSERT used on 010A, 010B, 010C, 010D, 010E, 010F, 010G, 010H, 010J, 010K, 010L, 010M		012
-110A	NSA5054-3		. . . INSERT used on 010A, 010B, 010C, 010D, 010E, 010F, 010G, 010H, 010J, 010K, 010L, 010M		003

- ITEM NOT ILLUSTRATED

FIG. ITEM	PART NUMBER	AIRLINE STOCK NUMBER	NOMENCLATURE 1234567	EFF CODE	UNITS PER ASSY
-120A	NSA5054-4		. . . INSERT used on 010A, 010B, 010C, 010D, 010E, 010F, 010G, 010H, 010J, 010K, 010L, 010M		006
-130A	NSA935405-01		. . . MOUNT used on 010A, 010B, 010C, 010D, 010E, 010F, 010G, 010H, 010J, 010K, 010L, 010M		010
140A	A225401410-502		. . COVER-OXYGEN CONTAIN-ER ASSY used on 001A, 001B, 001C, 001D, 001E, 001F, 001H, 001J, 001K, 001L, 001M, 001N, 001P, 001Q		001
-140B	A225401410-518		. . COVER-OXYGEN CONTAIN-ER ASSY used on 001G		001
150A	A225400450-204		. . ANGLE used on 001A, 001B, 001C, 001D, 001E, 001F, 001G, 001H, 001J, 001K, 001L, 001M, 001N, 001P, 001Q		001
160A	NAS1102-08-5		. . SCREW used on 001A, 001B, 001C, 001D, 001E, 001F, 001G, 001H, 001J, 001K, 001L, 001M, 001N, 001P, 001Q		004
170A	NSA5067-08-1		. . NUT used on 001A, 001B, 001C, 001D, 001E, 001F, 001G, 001H, 001J, 001K, 001L, 001M, 001N, 001P, 001Q		004

- ITEM NOT ILLUSTRATED

FIG. ITEM	PART NUMBER	AIRLINE STOCK NUMBER	NOMENCLATURE 1234567	EFF CODE	UNITS PER ASSY
180A	A225400450-202		. . ANGLE used on 001A, 001B, 001C, 001D, 001E, 001F, 001G, 001H, 001J, 001K, 001L, 001M, 001N, 001P, 001Q		002
190A	22C150150320004		. . CONTAINER ASSY-OXYGEN PRE VSB A2-254-25-070 used on 001A, 001H		001
-190B	G2F212-85		. . CONTAINER ASSY-OXYGEN PRE VSB A2-254-25-022 PRE VSB A2-254-25-054 used on 001B, 001C, 001D, 001F, 001J, 001K, 001P		001
-190C	E2F212-85		. . CONTAINER ASSY-OXYGEN used on 001E		001
-190D	G2F212-77		. . CONTAINER ASSY-OXYGEN used on 001G		001
-190E	AH5702-25		. . CONTAINER ASSY-OXYGEN used on 001L, 001M		001
-190F	44A2F21-285		. . CONTAINER ASSY-OXYGEN POST VSB A2-254-25-022 used on 001N		001
-190G	22G150150320400		. . CONTAINER ASSY-OXYGEN POST VSB A2-254-25-054 POST VSB A2-254-25-070 used on 001H, 001Q		001

- ITEM NOT ILLUSTRATED

FIG. ITEM	PART NUMBER	AIRLINE STOCK NUMBER	NOMENCLATURE 1234567	EFF CODE	UNITS PER ASSY
200A	NAS1096-2-5		. . SCREW BUY PN NAS1801-08-5 PRE VSB A2-254-25-054 PRE VSB A2-254-25-070 used on 001A, 001B, 001C, 001D, 001E, 001F, 001G, 001H, 001J, 001K, 001L, 001M, 001P		008
-200B	NAS1096-2-5		. . SCREW POST VSB A2-254-25-054 POST VSB A2-254-25-070 used on 001H, 001N, 001Q		004
-205A	NAS1801-08-5		. . SCREW used on 001N		004
-205B	NAS1801-08-6		. . SCREW POST VSB A2-254-25-054 POST VSB A2-254-25-070 used on 001H, 001Q		004
210A	NAS1149CN832R		. . WASHER used on 001A, 001B, 001C, 001D, 001E, 001F, 001G, 001H, 001J, 001K, 001L, 001M, 001N, 001P, 001Q		026
220A	A225400451-202		. . STUD used on 001A, 001B, 001C, 001D, 001E, 001F, 001G, 001H, 001J, 001K, 001L, 001M, 001N, 001P, 001Q		002
230A	A225401222-600		. . POST ASSY used on 001A, 001F, 001H, 001K, 001N, 001Q		001
-230B	A225401222-604		. . POST ASSY used on 001B, 001C, 001D, 001E, 001J, 001P		001

- ITEM NOT ILLUSTRATED

FIG. ITEM	PART NUMBER	AIRLINE STOCK NUMBER	NOMENCLATURE 1234567	EFF CODE	UNITS PER ASSY
-230C	A225401222-610		. . POST ASSY used on 001G		001
-230D	A225401222-504		. . POST ASSY used on 001L		001
-230E	A225401222-500		. . POST ASSY used on 001M		001
240A	NAS514P832-4		. . . SCREW used on 230A, 230B, 230C, 230D, 230E		004
250A	NAS1068A08		. . . NUT BUY PN MS21075L08 used on 230A, 230B, 230C, 230D, 230E		004
260A	NAS1096-2-7		. . SCREW BUY PN NAS1801-08-7 used on 001A, 001B, 001C, 001D, 001E, 001F, 001G, 001H, 001J, 001K, 001L, 001M, 001N, 001P, 001Q		016
270A	2634DP437-110		. . CAP used on 001A, 001B, 001C, 001D, 001E, 001F, 001G, 001H, 001J, 001K, 001L, 001M, 001N, 001P, 001Q		005
280A	NAS1096-3-9		. . SCREW BUY PN NAS1801-3-9 used on 001A, 001B, 001C, 001D, 001E, 001F, 001G, 001H, 001J, 001K, 001L, 001M, 001N, 001P, 001Q		001

- ITEM NOT ILLUSTRATED

FIG. ITEM	PART NUMBER	AIRLINE STOCK NUMBER	NOMENCLATURE 1234567	EFF CODE	UNITS PER ASSY
290A	550MBB1		. . HANDLEASSY used on 001A, 001B, 001C, 001D, 001E, 001F, 001G, 001H, 001J, 001K, 001L, 001N, 001P, 001Q		001
290B	550-33-300MBB		. . HANDLE ASSY used on 001M		001
300A	S7224		. . . SCREW-SPECIAL used on 290A, 290B		001
310A	8534		. . . PIN-SECURITY used on 290A, 290B		001
320A	8587		. . . WASHER-SPECIAL used on 290A, 290B		001
330A	A2547380206000		. . SUPPORT used on 001A, 001B, 001C, 001D, 001E, 001F, 001H, 001J, 001K, 001L, 001N, 001P, 001Q		001
-330B	A2547380210200		. . SUPPORT used on 001G		001
340A	A225401236-200		. . ANGLE used on 001A, 001B, 001C, 001D, 001E, 001F, 001G, 001H, 001J, 001K, 001L, 001M, 001N, 001P, 001Q		001
350A	A2547577004800		. . DISPENSER-TOILET SEAT COVER used on 001A, 001D, 001H, 001K, 001P A254-75770-048-00		001
-350B	A2547577008200		. . DISPENSER-TOILET SEAT COVER used on 001G		001

- ITEM NOT ILLUSTRATED

FIG. ITEM	PART NUMBER	AIRLINE STOCK NUMBER	NOMENCLATURE 1234567	EFF CODE	UNITS PER ASSY
360A	NAS1100-08-4		. . SCREW used on 001A, 001D, 001G, 001H, 001K, 001P		002
370A	A225400208-000		. . DEVICE ASSY-EMERGENCY UNLOCKING,SINGLE DOOR used on 001A, 001B, 001C, 001D, 001E, 001F, 001G, 001H, 001J, 001K, 001L, 001N, 001P, 001Q		001
380A	A225400208-200		. . . HOUSING-EMERGENCY UN-LOCKING DEVICE used on 370A		001
390A	A225400208-204		. . . STRIKE-EMERGENCY UN-LOCKING DEVICE used on 370A		001
400A	A225400208-202		. . . PIVOT-EMERGENCY UN-LOCKING DEVICE used on 370A		001
410A	A225400208-210		. . . PIN used on 370A		001
420A	SM1275-1KNM04		. . . CATCH-SNAP used on 370A		001
430A	A225400208-208		. . . BOLT used on 370A		001
440A	NAS514P832-7		. . SCREW used on 001A, 001B, 001C, 001D, 001E, 001F, 001G, 001H, 001J, 001K, 001M, 001N, 001P, 001Q		002
441A	NAS514P832-7		. . SCREW POST SB 25-1316 used on 001L		006

- ITEM NOT ILLUSTRATED

FIG. ITEM	PART NUMBER	AIRLINE STOCK NUMBER	NOMENCLATURE 1234567	EFF CODE	UNITS PER ASSY
450A	NSA5067-08-1		. . NUT POST SB 25-1316 used on 001L		002
460A	A225400221-202		. . PLATE POST SB 25-1316 used on 001L		002
470A	A225400231-362		. . STRIP-REINFORCING POST SB 25-1314 used on 001L		002
-480A	4421054-0D0		. . HOSE POST VSB A2-254-25-022 used on 001N		001
-490A	MS21919WCH8		. . CLAMP POST VSB A2-254-25-022 used on 001N		002
-500A	NAS1096-2-10		. . SCREW used on 001N		002
-510A	NAS1149C0332R		. . WASHER used on 001N		002
-520A	A225400216-314		. . STRIP-KICK POST VSB A2-254-25-032 used on 001P		001

- ITEM NOT ILLUSTRATED

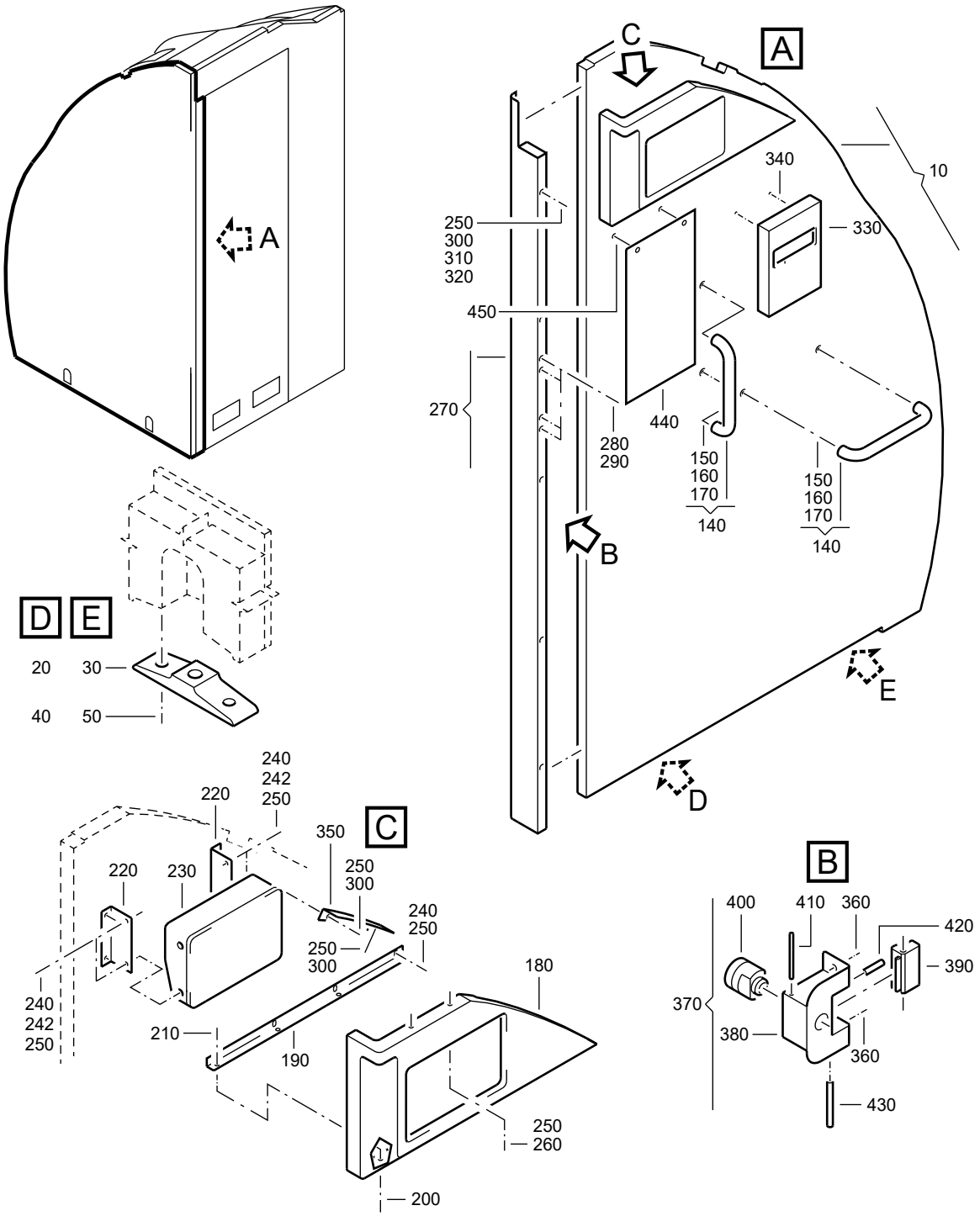

F_PL_254151_48_K_01_01

WALL-SIDE
Figure 48K/EN254151SHEET48K01

FIG. ITEM	PART NUMBER	AIRLINE STOCK NUMBER	NOMENCLATURE 1234567	EFF CODE	UNITS PER ASSY
48K					
-001A	D2549020409265		. WALL-SIDE NP used on 040G (25415142L), 040C (25415142U) SEE 25-41-51-42L FOR NHA SEE 25-41-51-42U FOR NHA		RF
-001B	D2549010401665		. WALL-SIDE NP used on 040E (25415142J) SEE 25-41-51-42J FOR NHA		RF
-001C	D2549030412865		. WALL-SIDE NP PRE VSB A2-254-25-106 used on 040H (25415142L), 040M (25415142T) SEE 25-41-51-42L FOR NHA SEE 25-41-51-42T FOR NHA		RF
-001D	D2549020804465		. WALL-SIDE NP used on 040K (25415142L) SEE 25-41-51-42L FOR NHA		RF
-001E	D2549020409465		. WALL-SIDE NP used on 040A (25415142M) SEE 25-41-51-42M FOR NHA		RF
-001F	D2549020403665		. WALL-SIDE NP used on 040B (25415142M) SEE 25-41-51-42M FOR NHA		RF
-001G	D2549020408065		. WALL-SIDE NP used on 040E (25415142M) SEE 25-41-51-42M FOR NHA		RF
-001H	D2549010403865		. WALL-SIDE NP used on 040F (25415142M) SEE 25-41-51-42M FOR NHA		RF

- ITEM NOT ILLUSTRATED

FIG. ITEM	PART NUMBER	AIRLINE STOCK NUMBER	NOMENCLATURE 1234567	EFF CODE	UNITS PER ASSY
-001J	D2549030413065		. WALL-SIDE NP PRE VSB A2-254-25-080 used on 040G (25415142M), 040J (25415142R) SEE 25-41-51-42M FOR NHA SEE 25-41-51-42R FOR NHA		RF
-001K	D2549020409865		. WALL-SIDE NP used on 040A (25415142N), 040F (25415142S) SEE 25-41-51-42N FOR NHA SEE 25-41-51-42S FOR NHA		RF
-001L	D2549010404465		. WALL-SIDE NP used on 040F (25415142J), 040A (25415142P) SEE 25-41-51-42J FOR NHA SEE 25-41-51-42P FOR NHA		RF
-001M	D2549010613665		. WALL-SIDE NP used on 040G (25415142B), 040K (25415142N) SEE 25-41-51-42B FOR NHA SEE 25-41-51-42N FOR NHA		RF
-001N	D2547160900465		. WALL-SIDE NP used on 040C (25415142P) SEE 25-41-51-42P FOR NHA		RF
-001P	R22540169100065		. WALL-SIDE NP POST VSB A2-254-25-080 used on 040M (25415142M), 040P (25415142R) SEE 25-41-51-42M FOR NHA SEE 25-41-51-42R FOR NHA		RF

- ITEM NOT ILLUSTRATED

FIG. ITEM	PART NUMBER	AIRLINE STOCK NUMBER	NOMENCLATURE 1234567	EFF CODE	UNITS PER ASSY
-001Q	R22540168900465		. WALL-SIDE NP POST VSB A2-254-25-106 used on 040P (25415142L), 040Q (25415142T) SEE 25-41-51-42L FOR NHA SEE 25-41-51-42T FOR NHA		RF
010A	A225401235-678		. . WALL ASSY-SIDE,AFT used on 001A		001
-010B	A225401235-668		. . WALL ASSY-SIDE,AFT used on 001B		001
-010C	A225401235-672		. . WALL ASSY-SIDE,AFT used on 001K		001
-010D	A225401235-680		. . WALL ASSY-SIDE,AFT used on 001D		001
-010E	A225401235-682		. . WALL ASSY-SIDE,AFT used on 001E		001
-010F	A225401235-642		. . WALL ASSY-SIDE,AFT used on 001F		001
-010G	A225401235-634		. . WALL ASSY-SIDE,AFT used on 001G		001
-010H	A225401235-674		. . WALL ASSY-SIDE,AFT used on 001H		001
-010J	A225401234-620		. . WALL ASSY-SIDE,AFT used on 001J, 001P		001
-010K	A225401235-676		. . WALL ASSY-SIDE,AFT used on 001L, 001N		001
-010L	A225401235-600		. . WALL ASSY-SIDE,AFT used on 001M		001

- ITEM NOT ILLUSTRATED

FIG. ITEM	PART NUMBER	AIRLINE STOCK NUMBER	NOMENCLATURE 1234567	EFF CODE	UNITS PER ASSY
-010M	A225401235-604		. . WALL ASSY-SIDE,AFT PRE VSB A2-254-25-106 used on 001C		001
-010N	A225401235-752		. . WALL ASSY-SIDE,AFT POST VSB A2-254-25-106 used on 001Q		001
020A	A225400232-208		. . . FITTING used on 010A, 010B, 010C, 010D, 010E, 010F, 010G, 010H, 010J, 010K, 010L, 010M, 010N		001
030A	A225400232-216		. . . FITTING used on 010A, 010B, 010C, 010D, 010E, 010F, 010G, 010H, 010J, 010K, 010L, 010M, 010N		001
040A	ABS0704-6-50		. . . SCREW used on 010A, 010B, 010C, 010D, 010E, 010F, 010G, 010H, 010J, 010K, 010L, 010M, 010N		002
050A	ABS0705-6-50		. . . SCREW used on 010A, 010B, 010C, 010D, 010E, 010F, 010G, 010H, 010J, 010K, 010L, 010M, 010N		002
-060A	NAS1833C08-370		. . . INSERT used on 010A, 010B, 010C, 010D, 010E, 010F, 010G, 010H, 010J, 010K, 010L, 010M, 010N		083
-070A	NSA5054-08		. . . INSERT used on 010A, 010B, 010C, 010D, 010E, 010F, 010G, 010H, 010J, 010K, 010L, 010M, 010N		002

- ITEM NOT ILLUSTRATED

FIG. ITEM	PART NUMBER	AIRLINE STOCK NUMBER	NOMENCLATURE 1234567	EFF CODE	UNITS PER ASSY
-080A	NAS1835C08		. . . INSERT used on 010A, 010B, 010C, 010D, 010E, 010F, 010G, 010H, 010J, 010K, 010L, 010M, 010N		009
-090A	NAS1833C3-370		. . . INSERT used on 010A, 010B, 010C, 010D, 010E, 010F, 010G, 010H, 010J, 010K, 010L, 010M, 010N		020
-100A	NSA5054-5		. . . INSERT used on 010A, 010B, 010C, 010D, 010E, 010F, 010G, 010H, 010J, 010K, 010L, 010M, 010N		012
-110A	NSA5054-3		. . . INSERT used on 010A, 010B, 010C, 010D, 010E, 010F, 010G, 010H, 010J, 010K, 010L, 010M, 010N		003
-120A	NSA5054-4		. . . INSERT used on 010A, 010B, 010C, 010D, 010E, 010F, 010G, 010H, 010J, 010K, 010L, 010M, 010N		006
-130A	NSA935405-01		. . . MOUNT used on 010A, 010B, 010C, 010D, 010E, 010F, 010G, 010H, 010J, 010K, 010L, 010M, 010N		010
140A	550-33-300MBB		. . HANDLE ASSY used on 001A, 001B, 001C, 001D, 001E, 001F, 001G, 001H, 001J, 001K, 001L, 001M, 001N, 001P, 001Q		002
150A	S7224		. . . SCREW-SPECIAL used on 140A		002

- ITEM NOT ILLUSTRATED

FIG. ITEM	PART NUMBER	AIRLINE STOCK NUMBER	NOMENCLATURE 1234567	EFF CODE	UNITS PER ASSY
160A	8534		. . . PIN-SECURITY used on 140A		002
170A	8587		. . . WASHER-SPECIAL used on 140A		002
180A	A225401410-502		. . COVER-OXYGEN CONTAIN-ER ASSY PRE VSB A2-254-25-106 used on 001A, 001C, 001D, 001E, 001F, 001G, 001H, 001J, 001K, 001L, 001M, 001N, 001P		001
-180B	A225401410-508		. . COVER-OXYGEN CONTAIN-ER ASSY used on 001B		001
-180C	A225401410-534		. . COVER-OXYGEN CONTAIN-ER ASSY POST VSB A2-254-25-106 used on 001Q		001
190A	A225400450-204		. . ANGLE used on 001A, 001B, 001C, 001D, 001E, 001F, 001G, 001H, 001J, 001K, 001L, 001M, 001N, 001P, 001Q		001
200A	NAS1102-08-5		. . SCREW used on 001A, 001B, 001C, 001D, 001E, 001F, 001G, 001H, 001J, 001K, 001L, 001M, 001N, 001P, 001Q		004
210A	NSA5067-08-1		. . NUT used on 001A, 001B, 001C, 001D, 001E, 001F, 001G, 001H, 001J, 001K, 001L, 001M, 001N, 001P, 001Q		004

- ITEM NOT ILLUSTRATED

FIG. ITEM	PART NUMBER	AIRLINE STOCK NUMBER	NOMENCLATURE 1234567	EFF CODE	UNITS PER ASSY
220A	A225400450-202		. . ANGLE used on 001A, 001B, 001C, 001D, 001E, 001F, 001G, 001H, 001J, 001K, 001L, 001M, 001N, 001P, 001Q		002
230A	22C150150320004		. . CONTAINER ASSY-OXYGEN PRE VSB A2-254-25-073 PRE VSB A2-254-25-080 used on 001A, 001E, 001F, 001G, 001H, 001J, 001K, 001L		001
-230B	G2F212-18		. . CONTAINER ASSY-OXYGEN used on 001B		001
-230C	22C220150320004		. . CONTAINER ASSY-OXYGEN used on 001C, 001Q		001
-230D	G2F212-85		. . CONTAINER ASSY-OXYGEN PRE VSB A2-254-25-125 used on 001D, 001M, 001N		001
-230E	22G150150320400		. . CONTAINER ASSY-OXYGEN POST VSB A2-254-25-073 POST VSB A2-254-25-080 POST VSB A2-254-25-125 used on 001D, 001F, 001P		001
240A	NAS1096-2-5		. . SCREW PRE VSB A2-254-25-073 PRE VSB A2-254-25-080 PRE VSB A2-254-25-125 BUY PN NAS1801-08-5 used on 001A, 001B, 001C, 001D, 001E, 001F, 001G, 001H, 001J, 001K, 001L, 001M, 001N, 001Q		008

- ITEM NOT ILLUSTRATED

FIG. ITEM	PART NUMBER	AIRLINE STOCK NUMBER	NOMENCLATURE 1234567	EFF CODE	UNITS PER ASSY
-240B	NAS1096-2-5		. . SCREW POST VSB A2-254-25-073 POST VSB A2-254-25-080 POST VSB A2-254-25-125 BUY PN NAS1801-08-5 used on 001D, 001F, 001P		004
242A	NAS1801-08-6		. . SCREW POST VSB A2-254-25-073 POST VSB A2-254-25-080 POST VSB A2-254-25-125 used on 001D, 001F, 001P		004
250A	NAS1149CN832R		. . WASHER used on 001A, 001B, 001C, 001D, 001E, 001F, 001G, 001H, 001J, 001K, 001L, 001M, 001N, 001P, 001Q		024
260A	A225400451-202		. . STUD used on 001A, 001B, 001C, 001D, 001E, 001F, 001G, 001H, 001J, 001K, 001L, 001M, 001N, 001P, 001Q		002
270A	A225401222-632		. . POST ASSY used on 001A		001
-270B	A225401222-600		. . POST ASSY PRE VSB A2-254-25-106 used on 001B, 001C, 001K, 001L, 001N		001
-270C	A225401222-604		. . POST ASSY used on 001D, 001F, 001H, 001J, 001M, 001P		001
-270D	A225401222-626		. . POST ASSY used on 001E, 001G		001

- ITEM NOT ILLUSTRATED

FIG. ITEM	PART NUMBER	AIRLINE STOCK NUMBER	NOMENCLATURE 1234567	EFF CODE	UNITS PER ASSY
-270E	A225401222-904		. . POST ASSY POST VSB A2-254-25-106 used on 001Q		001
280A	NAS514P832-4		. . . SCREW used on 270A, 270B, 270C, 270D, 270E		004
290A	NAS1068A08		. . . NUT BUY PN MS21075L08 used on 270A, 270B, 270C, 270D, 270E		004
300A	NAS1096-2-7		. . SCREW BUY PN NAS1801-08-7 used on 001A, 001B, 001C, 001D, 001E, 001F, 001G, 001H, 001J, 001K, 001L, 001M, 001N, 001P, 001Q		014
310A	2634DP437-110		. . CAP used on 001A, 001B, 001C, 001D, 001E, 001F, 001G, 001H, 001J, 001K, 001L, 001M, 001N, 001P, 001Q		005
320A	NAS1096-3-9		. . SCREW BUY PN NAS1801-3-9 used on 001A, 001B, 001C, 001D, 001E, 001F, 001G, 001H, 001J, 001K, 001L, 001M, 001N, 001P, 001Q		001
330A	A2547577004800		. . DISPENSER-TOILET SEAT COVER PRE VSB A2-254-25-106 used on 001A, 001C, 001E, 001G, 001H, 001J, 001L, 001N, 001P A254-75770-048-00		001

- ITEM NOT ILLUSTRATED

FIG. ITEM	PART NUMBER	AIRLINE STOCK NUMBER	NOMENCLATURE 1234567	EFF CODE	UNITS PER ASSY
-330B	A225400466-602		. . DISPENSER-TOILET SEAT COVER POST VSB A2-254-25-106 used on 001Q		001
340A	NAS1100-08-4		. . SCREW PRE VSB A2-254-25-106 used on 001A, 001C, 001E, 001G, 001H, 001J, 001L, 001P		002
-340B	NAS1100-08-5		. . SCREW POST VSB A2-254-25-106 used on 001Q		002
350A	A225401236-200		. . ANGLE used on 001A, 001B, 001C, 001D, 001E, 001F, 001G, 001H, 001J, 001K, 001L, 001M, 001N, 001P, 001Q		001
360A	NAS514P832-7		. . SCREW used on 001A, 001B, 001C, 001D, 001E, 001F, 001G, 001H, 001J, 001K, 001L, 001M, 001N, 001P, 001Q		002
370A	A225400208-000		. . DEVICE ASSY-EMERGENCY UNLOCKING,SINGLE DOOR used on 001A, 001B, 001C, 001D, 001E, 001F, 001G, 001H, 001J, 001K, 001L, 001M, 001N, 001P, 001Q		001
380A	A225400208-200		. . . HOUSING-EMERGENCY UN-LOCKING DEVICE used on 370A		001
390A	A225400208-204		. . . STRIKE-EMERGENCY UN-LOCKING DEVICE used on 370A		001

- ITEM NOT ILLUSTRATED

FIG. ITEM	PART NUMBER	AIRLINE STOCK NUMBER	NOMENCLATURE 1234567	EFF CODE	UNITS PER ASSY
400A	A225400208-202		. . . PIVOT-EMERGENCY UN-LOCKING DEVICE used on 370A		001
410A	A225400208-210		. . . PIN used on 370A		001
420A	SM1275-1KNM04		. . . CATCH-SNAP used on 370A		001
430A	A225400208-208		. . . BOLT used on 370A		001
440A	2336000-9		. . KIT-LAVATORY PICTURE FRAME used on 001H		001
450A	NAS1100-08-4		. . SCREW used on 001H		002
-460A	R225400211-014		. . STRIP-KICK POST VSB A2-254-25-106 used on 001Q		001

- ITEM NOT ILLUSTRATED

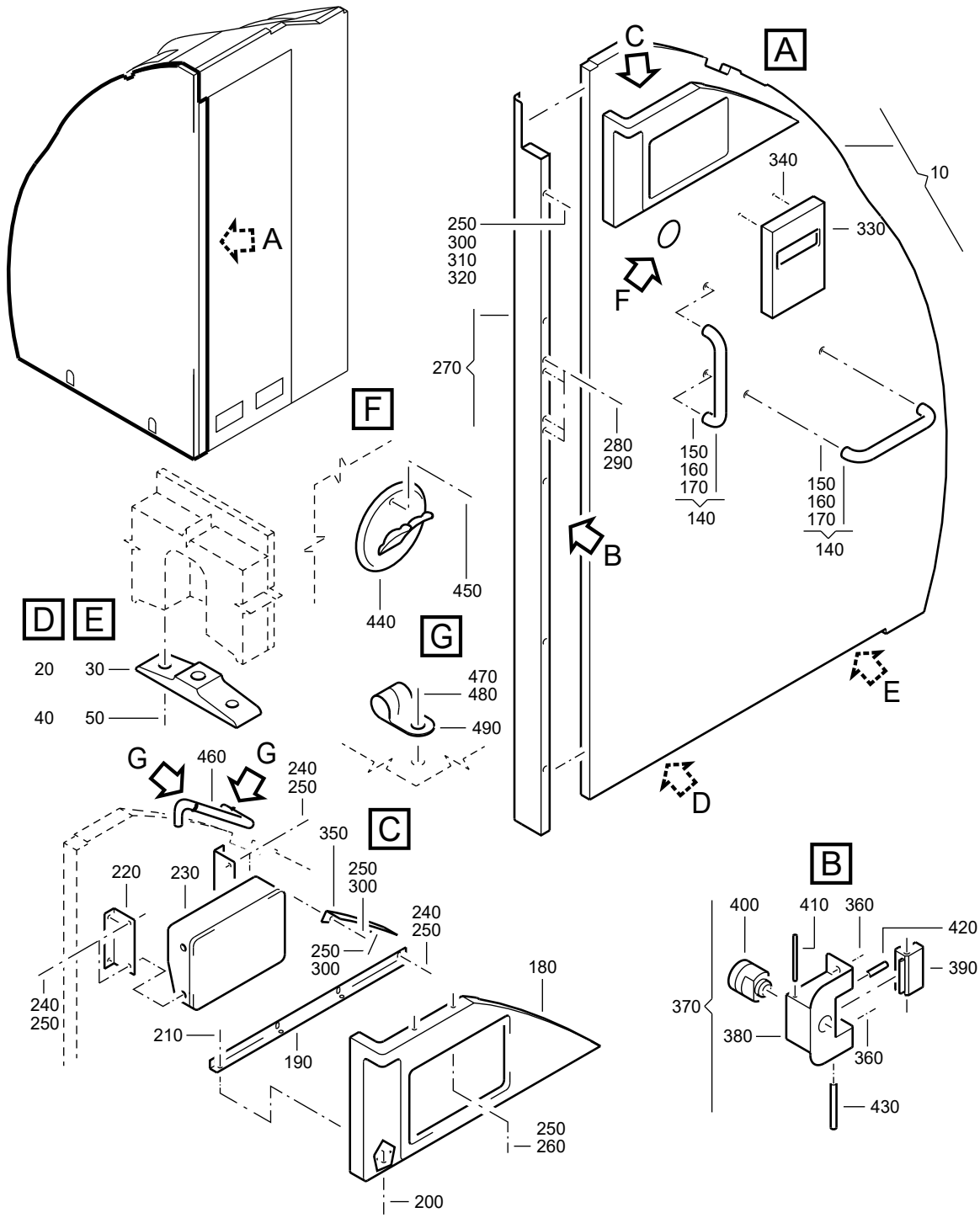

F_PL_254151_48_L_01_00

WALL-SIDE
Figure 48L/EN254151SHEET48L01

FIG. ITEM	PART NUMBER	AIRLINE STOCK NUMBER	NOMENCLATURE 1234567	EFF CODE	UNITS PER ASSY
48L					
-001A	D2549020410465		. WALL-SIDE NP used on 040C (25415142N) SEE 25-41-51-42N FOR NHA		RF
-001B	D2549030413665		. WALL-SIDE NP PRE VSB A2-254-25-045 used on 040G (25415142J) SEE 25-41-51-42J FOR NHA		RF
-001C	D2549010402465		. WALL-SIDE NP used on 040E (25415142N), 040J (25415142T) SEE 25-41-51-42N FOR NHA SEE 25-41-51-42T FOR NHA		RF
-001D	D2549030413465		. WALL-SIDE NP used on 040F (25415142N), 040L (25415142T) SEE 25-41-51-42N FOR NHA SEE 25-41-51-42T FOR NHA		RF
-001E	D2549030414665		. WALL-SIDE NP used on 040G (25415142N), 040H (25415142S) SEE 25-41-51-42N FOR NHA SEE 25-41-51-42S FOR NHA		RF
-001F	D2549030414465		. WALL-SIDE NP used on 040H (25415142N) SEE 25-41-51-42N FOR NHA		RF
-001G	D2549020410865		. WALL-SIDE NP used on 040A (25415142Q) SEE 25-41-51-42Q FOR NHA		RF

- ITEM NOT ILLUSTRATED

FIG. ITEM	PART NUMBER	AIRLINE STOCK NUMBER	NOMENCLATURE 1234567		EFF CODE	UNITS PER ASSY
-001H	D2549010405065		. WALL-SIDE used on 040B (25415142Q), 040A (25415142S), 040B (25415142U) SEE 25-41-51-42Q FOR NHA SEE 25-41-51-42S FOR NHA SEE 25-41-51-42U FOR NHA	NP		RF
-001J	D2549010405465		. WALL-SIDE used on 040J (25415142Q) SEE 25-41-51-42Q FOR NHA	NP		RF
-001K	D2549020411665		. WALL-SIDE used on 040L (25415142Q) SEE 25-41-51-42Q FOR NHA	NP		RF
-001L	D2549020411865		. WALL-SIDE used on 040B (25415142R) SEE 25-41-51-42R FOR NHA	NP		RF
-001M	D2549030701265		. WALL-SIDE used on 040M (25415142N) SEE 25-41-51-42N FOR NHA	NP		RF
-001N	D2549020413065		. WALL-SIDE used on 040H (25415142R), 040K (25415142S) SEE 25-41-51-42R FOR NHA SEE 25-41-51-42S FOR NHA	NP		RF
-001P	R22540119901265		. WALL-SIDE POST VSB A2-254-25-045 used on 040K (25415142J) SEE 25-41-51-42J FOR NHA	NP		RF
010A	A225401235-694		. . WALL ASSY-SIDE,AFT used on 001A			001
-010B	A225401235-684		. . WALL ASSY-SIDE,AFT used on 001B, 001P			001

- ITEM NOT ILLUSTRATED

FIG. ITEM	PART NUMBER	AIRLINE STOCK NUMBER	NOMENCLATURE 1234567	EFF CODE	UNITS PER ASSY
-010C	A225401235-688		. . WALL ASSY-SIDE,AFT used on 001C		001
-010D	A225401235-686		. . WALL ASSY-SIDE,AFT used on 001D		001
-010E	A225401234-622		. . WALL ASSY-SIDE,AFT used on 001E		001
-010F	A225401235-690		. . WALL ASSY-SIDE,AFT used on 001F		001
-010G	A225401235-698		. . WALL ASSY-SIDE,AFT used on 001G		001
-010H	A225401235-696		. . WALL ASSY-SIDE,AFT used on 001H		001
-010J	A225401235-700		. . WALL ASSY-SIDE,AFT used on 001K		001
-010K	A225401235-702		. . WALL ASSY-SIDE,AFT used on 001L		001
-010L	A225401235-704		. . WALL ASSY-SIDE,AFT used on 001M		001
-010M	A225401235-706		. . WALL ASSY-SIDE,AFT used on 001N		001
-010N	A225401235-622		. . WALL ASSY-SIDE,AFT used on 001J		001
020A	A225400232-208		. . . FITTING used on 010A, 010B, 010C, 010D, 010E, 010F, 010G, 010H, 010J, 010K, 010L, 010M, 010N		001

- ITEM NOT ILLUSTRATED

FIG. ITEM	PART NUMBER	AIRLINE STOCK NUMBER	NOMENCLATURE 1234567	EFF CODE	UNITS PER ASSY
030A	A225400232-216		. . . FITTING used on 010A, 010B, 010C, 010D, 010E, 010F, 010G, 010H, 010J, 010K, 010L, 010M, 010N		001
040A	ABS0704-6-50		. . . SCREW used on 010A, 010B, 010C, 010D, 010E, 010F, 010G, 010H, 010J, 010K, 010L, 010M, 010N		002
050A	ABS0705-6-50		. . . SCREW used on 010A, 010B, 010C, 010D, 010E, 010F, 010G, 010H, 010J, 010K, 010L, 010M, 010N		002
-060A	NAS1833C08-370		. . . INSERT used on 010A, 010B, 010C, 010D, 010E, 010F, 010G, 010H, 010J, 010K, 010L, 010M, 010N		083
-070A	NSA5054-08		. . . INSERT used on 010A, 010B, 010C, 010D, 010E, 010F, 010G, 010H, 010J, 010K, 010L, 010M, 010N		002
-080A	NAS1835C08		. . . INSERT used on 010A, 010B, 010C, 010D, 010E, 010F, 010G, 010H, 010J, 010K, 010L, 010M, 010N		009
-090A	NAS1833C3-370		. . . INSERT used on 010A, 010B, 010C, 010D, 010E, 010F, 010G, 010H, 010J, 010K, 010L, 010M, 010N		020
-100A	NSA5054-5		. . . INSERT used on 010A, 010B, 010C, 010D, 010E, 010F, 010G, 010H, 010J, 010K, 010L, 010M, 010N		012

- ITEM NOT ILLUSTRATED

FIG. ITEM	PART NUMBER	AIRLINE STOCK NUMBER	NOMENCLATURE 1234567	EFF CODE	UNITS PER ASSY
-110A	NSA5054-3		. . . INSERT used on 010A, 010B, 010C, 010D, 010E, 010F, 010G, 010H, 010J, 010K, 010L, 010M, 010N		003
-120A	NSA5054-4		. . . INSERT used on 010A, 010B, 010C, 010D, 010E, 010F, 010G, 010H, 010J, 010K, 010L, 010M, 010N		006
-130A	NSA935405-01		. . . MOUNT used on 010A, 010B, 010C, 010D, 010E, 010F, 010G, 010H, 010J, 010K, 010L, 010M, 010N		010
140A	550-33-300MBB		. . HANDLE ASSY used on 001A, 001B, 001C, 001D, 001E, 001F, 001G, 001H, 001J, 001K, 001L, 001M, 001N, 001P		002
150A	S7224		. . . SCREW-SPECIAL used on 140A		002
160A	8534		. . . PIN-SECURITY used on 140A		002
170A	8587		. . . WASHER-SPECIAL used on 140A		002
180A	A225401410-502		. . COVER-OXYGEN CONTAINER ASSY used on 001A, 001B, 001C, 001F, 001G, 001H, 001J, 001K, 001M, 001N, 001P		001
-180B	A225401410-518		. . COVER-OXYGEN CONTAINER ASSY used on 001E, 001L		001

- ITEM NOT ILLUSTRATED

FIG. ITEM	PART NUMBER	AIRLINE STOCK NUMBER	NOMENCLATURE 1234567	EFF CODE	UNITS PER ASSY
-180C	A225401410-522		. . COVER-OXYGEN CONTAIN-ER ASSY used on 001D		001
190A	A225400450-204		. . ANGLE used on 001A, 001B, 001C, 001D, 001E, 001F, 001G, 001H, 001J, 001K, 001L, 001M, 001N, 001P		001
200A	NAS1102-08-5		. . SCREW used on 001A, 001B, 001C, 001D, 001E, 001F, 001G, 001H, 001J, 001K, 001L, 001M, 001N, 001P		004
210A	NSA5067-08-1		. . NUT used on 001A, 001B, 001C, 001D, 001E, 001F, 001G, 001H, 001J, 001K, 001L, 001M, 001N, 001P		004
220A	A225400450-202		. . ANGLE used on 001A, 001B, 001C, 001D, 001E, 001F, 001G, 001H, 001J, 001K, 001L, 001M, 001N, 001P		002
230A	22C150150320004		. . CONTAINER ASSY-OXYGEN used on 001A, 001F, 001H, 001J		001
-230B	G2F212-85		. . CONTAINER ASSY-OXYGEN PRE VSB A2-254-25-045 PRE VSB A2-254-25-083 used on 001B, 001C, 001G, 001K, 001N		001
-230C	44A2F21-298		. . CONTAINER ASSY-OXYGEN used on 001D		001

- ITEM NOT ILLUSTRATED

FIG. ITEM	PART NUMBER	AIRLINE STOCK NUMBER	NOMENCLATURE 1234567	EFF CODE	UNITS PER ASSY
-230D	G2F212-77		. . CONTAINER ASSY-OXYGEN used on 001E, 001L		001
-230E	22C220150320004		. . CONTAINER ASSY-OXYGEN used on 001M		001
-230F	22G150150320400		. . CONTAINER ASSY-OXYGEN POST VSB A2-254-25-045 POST VSB A2-254-25-083 used on 001K, 001P		001
240A	NAS1096-2-5		. . SCREW PRE VSB A2-254-25-045 BUY PN NAS1801-08-5 used on 001A, 001B, 001C, 001D, 001E, 001F, 001G, 001H, 001J, 001K, 001L, 001M, 001N		008
-240B	NAS1096-2-5		. . SCREW POST VSB A2-254-25-045 POST VSB A2-254-25-083 BUY PN NAS1801-08-5 used on 001K, 001P		004
-242A	NAS1801-08-6		. . SCREW POST VSB A2-254-25-045 POST VSB A2-254-25-083 used on 001K, 001P		004
250A	NAS1149CN832R		. . WASHER used on 001A, 001B, 001C, 001D, 001E, 001F, 001G, 001H, 001J, 001K, 001L, 001M, 001N, 001P		024
260A	A225400451-202		. . STUD used on 001A, 001B, 001C, 001D, 001E, 001F, 001G, 001H, 001J, 001K, 001L, 001M, 001N, 001P		002

- ITEM NOT ILLUSTRATED

FIG. ITEM	PART NUMBER	AIRLINE STOCK NUMBER	NOMENCLATURE 1234567	EFF CODE	UNITS PER ASSY
270A	A225401222-626		. . POST ASSY used on 001A		001
-270B	A225401222-600		. . POST ASSY used on 001B, 001F, 001G, 001P		001
-270C	A225401222-604		. . POST ASSY used on 001C, 001J, 001N		001
-270D	A225401222-634		. . POST ASSY used on 001D		001
-270E	A225401222-636		. . POST ASSY used on 001E		001
-270F	A225401222-624		. . POST ASSY used on 001H		001
-270G	A225401222-630		. . POST ASSY used on 001K		001
-270H	A225401222-612		. . POST ASSY used on 001L		001
-270J	A225401222-618		. . POST ASSY used on 001M		001
280A	NAS514P832-4		. . . SCREW used on 270A, 270B, 270C, 270D, 270E, 270F, 270G,270H, 270J		004
290A	NAS1068A08		. . . NUT BUY PN MS21075L08 used on 270A, 270B, 270C, 270D, 270E, 270F, 270G,270H, 270J		004

- ITEM NOT ILLUSTRATED

FIG. ITEM	PART NUMBER	AIRLINE STOCK NUMBER	NOMENCLATURE 1234567	EFF CODE	UNITS PER ASSY
300A	NAS1096-2-7		. . SCREW BUY PN NAS1801-08-7 used on 001A, 001B, 001C, 001D, 001E, 001F, 001G, 001H, 001J, 001K, 001L, 001M, 001N, 001P		014
310A	2634DP437-110		. . CAP used on 001A, 001B, 001C, 001D, 001E, 001F, 001G, 001H, 001J, 001K, 001L, 001M, 001N, 001P		005
320A	NAS1096-3-9		. . SCREW BUY PN NAS1801-3-9 used on 001A, 001B, 001C, 001D, 001E, 001F, 001G, 001H, 001J, 001K, 001L, 001M, 001N, 001P		001
330A	A2547577004800		. . DISPENSER-TOILET SEAT COVER used on 001A, 001C, 001F, 001G, 001J, 001M A254-75770-048-00		001
-330B	A2547577008800		. . DISPENSER-TOILET SEAT COVER used on 001D		001
-330C	A2547577009400		. . DISPENSER-TOILET SEAT COVER used on 001E		001
-330D	A2547577008200		. . DISPENSER-TOILET SEAT COVER used on 001L		001

- ITEM NOT ILLUSTRATED

FIG. ITEM	PART NUMBER	AIRLINE STOCK NUMBER	NOMENCLATURE 1234567	EFF CODE	UNITS PER ASSY
340A	NAS1100-08-4		. . SCREW used on 001A, 001C, 001D, 001E, 001F, 001G, 001J, 001L, 001M		002
350A	A225401236-200		. . ANGLE used on 001A, 001B, 001C, 001D, 001E, 001F, 001G, 001H, 001J, 001K, 001L, 001M, 001N, 001P		001
360A	NAS514P832-7		. . SCREW used on 001A, 001B, 001C, 001D, 001E, 001F, 001G, 001H, 001J, 001K, 001L, 001M, 001N, 001P		002
370A	A225400208-000		. . DEVICE ASSY-EMERGENCY UNLOCKING,SINGLE DOOR used on 001A, 001B, 001C, 001D, 001E, 001F, 001G, 001H, 001J, 001K, 001L, 001M, 001N, 001P		001
380A	A225400208-200		. . . HOUSING-EMERGENCY UN-LOCKING DEVICE used on 370A		001
390A	A225400208-204		. . . STRIKE-EMERGENCY UN-LOCKING DEVICE used on 370A		001
400A	A225400208-202		. . . PIVOT-EMERGENCY UN-LOCKING DEVICE used on 370A		001
410A	A225400208-210		. . . PIN used on 370A		001
420A	SM1275-1KNM04		. . . CATCH-SNAP used on 370A		001

- ITEM NOT ILLUSTRATED

FIG. ITEM	PART NUMBER	AIRLINE STOCK NUMBER	NOMENCLATURE 1234567	EFF CODE	UNITS PER ASSY
430A	A225400208-208		. . . BOLT used on 370A		001
440A	AR197-3		. . HOOK-COAT used on 001D, 001E, 001J		001
450A	NAS514P832-7		. . SCREW used on 001D, 001E, 001J		001
460A	4421054-0D0		. . HOSE used on 001D		001
470A	NAS1096-2-10		. . SCREW BUY PN NAS1801-08-10 used on 001D		002
480A	NAS1149C0332R		. . WASHER used on 001D		002
490A	MS21919WCH8		. . CLAMP BUY PN AS21919WCH08 used on 001D		002

- ITEM NOT ILLUSTRATED

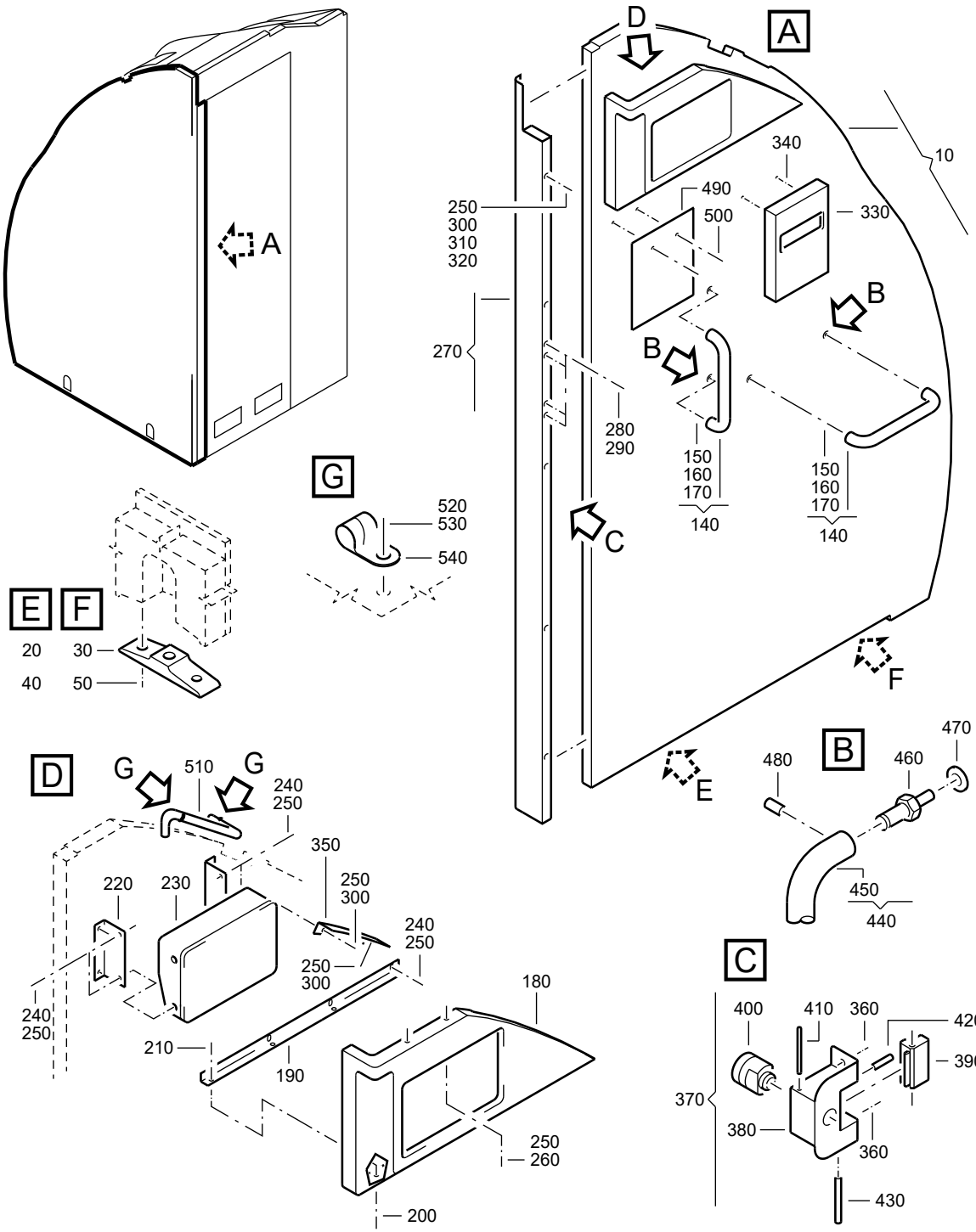

F_PL_254151_48_M_01_00

WALL-SIDE
Figure 48M/EN254151SHEET48M01

FIG. ITEM	PART NUMBER	AIRLINE STOCK NUMBER	NOMENCLATURE 1234567		EFF CODE	UNITS PER ASSY
48M						
-001A	D2549020413265		. WALL-SIDE used on 040K (25415142R) SEE 25-41-51-42R FOR NHA	NP		RF
-001B	D2549030702065		. WALL-SIDE used on 040M (25415142R) SEE 25-41-51-42R FOR NHA	NP		RF
-001C	D2549030702265		. WALL-SIDE used on 040F (25415142P) SEE 25-41-51-42P FOR NHA	NP		RF
-001D	D2549020412465		. WALL-SIDE used on 040B (25415142S) SEE 25-41-51-42S FOR NHA	NP		RF
-001E	D2549020414865		. WALL-SIDE used on 040E (25415142S) SEE 25-41-51-42S FOR NHA	NP		RF
-001F	D2549020414065		. WALL-SIDE used on 040L (25415142S) SEE 25-41-51-42S FOR NHA	NP		RF
-001G	D2549020414665		. WALL-SIDE used on 040A (25415142T) SEE 25-41-51-42T FOR NHA	NP		RF
-001H	D2549020414265		. WALL-SIDE PRE VSB A2-254-25-032 used on 040E (25415142T) SEE 25-41-51-42T FOR NHA	NP		RF
-001J	D2549020413865		. WALL-SIDE used on 040A (25415142U) SEE 25-41-51-42U FOR NHA	NP		RF
-001K	D2549030703265		. WALL-SIDE used on 040J (25415142U) SEE 25-41-51-42U FOR NHA	NP		RF

- ITEM NOT ILLUSTRATED

FIG. ITEM	PART NUMBER	AIRLINE STOCK NUMBER	NOMENCLATURE 1234567	EFF CODE	UNITS PER ASSY
-001L	D2549020301665		. WALL-SIDE NP used on 040D (25415142U) SEE 25-41-51-42U FOR NHA		RF
-001M	D2547160103465		. WALL-SIDE NP POST SB 35-1035 used on 040K (25415142U) SEE 25-41-51-42U FOR NHA		RF
-001N	D2549020414265		. WALL-SIDE NP POST VSB A2-254-25-032 used on 040N (25415142T) SEE 25-41-51-42T FOR NHA		RF
010A	A225401234-642		. . WALL ASSY-SIDE,AFT used on 001A		001
-010B	A225401234-646		. . WALL ASSY-SIDE,AFT used on 001B		001
-010C	A225401234-644		. . WALL ASSY-SIDE,AFT used on 001C		001
-010D	A225401234-638		. . WALL ASSY-SIDE,AFT used on 001D		001
-010E	A225401234-650		. . WALL ASSY-SIDE,AFT used on 001E		001
-010F	A225401234-652		. . WALL ASSY-SIDE,AFT used on 001F		001
-010G	A225401234-656		. . WALL ASSY-SIDE,AFT used on 001G		001
-010H	A225401235-710		. . WALL ASSY-SIDE,AFT used on 001H, 001N		001
-010J	A225401234-648		. . WALL ASSY-SIDE,AFT POST SB 35-1035 used on 001J, 001M		001

- ITEM NOT ILLUSTRATED

FIG. ITEM	PART NUMBER	AIRLINE STOCK NUMBER	NOMENCLATURE 1234567	EFF CODE	UNITS PER ASSY
-010K	A225401234-672		. . WALL ASSY-SIDE,AFT used on 001K		001
-010L	A225401234-636		. . WALL ASSY-SIDE,AFT used on 001L		001
020A	A225400232-208		. . . FITTING used on 010A, 010B, 010C, 010D, 010E, 010F, 010G, 010H, 010J, 010K, 010L		001
030A	A225400232-216		. . . FITTING used on 010A, 010B, 010C, 010D, 010E, 010F, 010G, 010H, 010J, 010K, 010L		001
040A	ABS0704-6-50		. . . SCREW used on 010A, 010B, 010C, 010D, 010E, 010F, 010G, 010H, 010J, 010K, 010L		002
050A	ABS0705-6-50		. . . SCREW used on 010A, 010B, 010C, 010D, 010E, 010F, 010G, 010H, 010J, 010K, 010L		002
-060A	NAS1833C08-370		. . . INSERT used on 010A, 010B, 010C, 010D, 010E, 010F, 010G, 010H, 010J, 010K, 010L		083
-070A	NSA5054-08		. . . INSERT used on 010A, 010B, 010C, 010D, 010E, 010F, 010G, 010H, 010J, 010K, 010L		002
-080A	NAS1835C08		. . . INSERT used on 010A, 010B, 010C, 010D, 010E, 010F, 010G, 010H, 010J, 010K, 010L		009

- ITEM NOT ILLUSTRATED

FIG. ITEM	PART NUMBER	AIRLINE STOCK NUMBER	NOMENCLATURE 1234567	EFF CODE	UNITS PER ASSY
-090A	NAS1833C3-370		. . . INSERT used on 010A, 010B, 010C, 010D, 010E, 010F, 010G, 010H, 010J, 010K, 010L		020
-100A	NSA5054-5		. . . INSERT used on 010A, 010B, 010C, 010D, 010E, 010F, 010G, 010H, 010J, 010K, 010L		012
-110A	NSA5054-3		. . . INSERT used on 010A, 010B, 010C, 010D, 010E, 010F, 010G, 010H, 010J, 010K, 010L		003
-120A	NSA5054-4		. . . INSERT used on 010A, 010B, 010C, 010D, 010E, 010F, 010G, 010H, 010J, 010K, 010L		006
-130A	NSA935405-01		. . . MOUNT used on 010A, 010B, 010C, 010D, 010E, 010F, 010G, 010H, 010J, 010K, 010L		010
140A	550-33-300MBB		. . HANDLE ASSY used on 001A, 001C, 001D, 001E, 001F, 001G, 001H, 001J, 001K, 001L, 001M, 001N		002
150A	S7224		. . . SCREW-SPECIAL used on 140A		002
160A	8534		. . . PIN-SECURITY used on 140A		002
170A	8587		. . . WASHER-SPECIAL used on 140A		002

- ITEM NOT ILLUSTRATED

FIG. ITEM	PART NUMBER	AIRLINE STOCK NUMBER	NOMENCLATURE 1234567	EFF CODE	UNITS PER ASSY
180A	A225401410-502		. . COVER-OXYGEN CONTAIN-ER ASSY used on 001A, 001C, 001D, 001F, 001G, 001H, 001J, 001M, 001N		001
-180B	A225401410-526		. . COVER-OXYGEN CONTAIN-ER ASSY used on 001B		001
-180C	A225401410-518		. . COVER-OXYGEN CONTAIN-ER ASSY used on 001E, 001K, 001L		001
190A	A225400450-204		. . ANGLE used on 001A, 001B, 001C, 001D, 001E, 001F, 001G, 001H, 001J, 001K, 001L, 001M, 001N		001
200A	NAS1102-08-5		. . SCREW used on 001A, 001B, 001C, 001D, 001E, 001F, 001G, 001H, 001J, 001K, 001L, 001M, 001N		004
210A	NSA5067-08-1		. . NUT used on 001A, 001B, 001C, 001D, 001E, 001F, 001G, 001H, 001J, 001K, 001L, 001M, 001N		004
220A	A225400450-202		. . ANGLE used on 001A, 001B, 001C, 001D, 001E, 001F, 001G, 001H, 001J, 001K, 001L, 001M, 001N		002
230A	22C150150320004		. . CONTAINER ASSY-OXYGEN used on 001A, 001D, 001G		001
-230B	22C150150020004		. . CONTAINER ASSY-OXYGEN used on 001B		001

- ITEM NOT ILLUSTRATED

FIG. ITEM	PART NUMBER	AIRLINE STOCK NUMBER	NOMENCLATURE 1234567	EFF CODE	UNITS PER ASSY
-230C	E2F212-85		. . CONTAINER ASSY-OXYGEN PRE VSB A2-254-25-069 POST SB 35-1035 used on 001C, 001M		001
-230D	G2F212-77		. . CONTAINER ASSY-OXYGEN used on 001E		001
-230E	G2F212-85		. . CONTAINER ASSY-OXYGEN used on 001F, 001H, 001J, 001N		001
-230F	44A2F21-277		. . CONTAINER ASSY-OXYGEN used on 001K		001
-230G	E2F212-77		. . CONTAINER ASSY-OXYGEN used on 001L		001
-230H	22G220150320400		. . CONTAINER ASSY-OXYGEN POST VSB A2-254-25-069 used on 001C		001
240A	NAS1096-2-5		. . SCREW PRE VSB A2-254-25-069 BUY PN NAS1801-08-5 used on 001A, 001B, 001C, 001D, 001E, 001F, 001G, 001H, 001J, 001K, 001L, 001M, 001N		008
-240B	NAS1096-2-5		. . SCREW POST VSB A2-254-25-069 BUY PN NAS1801-08-5 used on 001C		004
-245A	NAS1801-08-6		. . SCREW POST VSB A2-254-25-069 used on 001C		004
250A	NAS1149CN832R		. . WASHER used on 001A, 001B, 001C, 001D, 001E, 001F, 001G, 001H, 001J, 001K, 001L, 001M, 001N		024

- ITEM NOT ILLUSTRATED

FIG. ITEM	PART NUMBER	AIRLINE STOCK NUMBER	NOMENCLATURE 1234567	EFF CODE	UNITS PER ASSY
260A	A225400451-202		. . STUD used on 001A, 001B, 001C, 001D, 001E, 001F, 001G, 001H, 001J, 001K, 001L, 001M, 001N		002
270A	A225401222-626		. . POST ASSY used on 001A, 001D		001
-270B	A225401222-642		. . POST ASSY used on 001B		001
-270C	A225401222-610		. . POST ASSY used on 001C, 001E		001
-270D	A225401222-600		. . POST ASSY used on 001F		001
-270E	A225401222-644		. . POST ASSY used on 001G		001
-270F	A225401222-604		. . POST ASSY used on 001H, 001J, 001M, 001N		001
-270G	A225401222-612		. . POST ASSY used on 001K, 001L		001
280A	NAS514P832-4		. . . SCREW used on 270A, 270B, 270C, 270D, 270E, 270F, 270G		004
290A	NAS1068A08		. . . NUT BUY PN MS21075L08 used on 270A, 270B, 270C, 270D, 270E, 270F, 270G		004
300A	NAS1096-2-7		. . SCREW BUY PN NAS1801-08-7 used on 001A, 001B, 001C, 001D, 001E, 001F, 001G, 001H, 001J, 001K, 001L, 001M, 001N		014

- ITEM NOT ILLUSTRATED

FIG. ITEM	PART NUMBER	AIRLINE STOCK NUMBER	NOMENCLATURE 1234567	EFF CODE	UNITS PER ASSY
310A	2634DP437-110		. . CAP used on 001A, 001B, 001C, 001D, 001E, 001F, 001G, 001H, 001J, 001K, 001L, 001M, 001N		005
320A	NAS1096-3-9		. . SCREW BUY PN NAS1801-3-9 used on 001A, 001B, 001C, 001D, 001E, 001F, 001G, 001H, 001J, 001K, 001L, 001M, 001N		001
330A	A2547577004800		. . DISPENSER-TOILET SEAT COVER used on 001A, 001D, 001G, 001H, 001J, 001M, 001N A254-75770-048-00		001
-330B	A2547577009000		. . DISPENSER-TOILET SEAT COVER used on 001B		001
-330C	A2547577008200		. . DISPENSER-TOILET SEAT COVER used on 001K, 001L		001
340A	NAS1100-08-4		. . SCREW used on 001A, 001B, 001D, 001G, 001H, 001J, 001K, 001L, 001M, 001N		002
350A	A225401236-200		. . ANGLE used on 001A, 001B, 001C, 001D, 001E, 001F, 001G, 001H, 001J, 001K, 001L, 001M, 001N		001
360A	NAS514P832-7		. . SCREW used on 001A, 001B, 001C, 001D, 001E, 001F, 001G, 001H, 001J, 001K, 001L, 001M, 001N		002

- ITEM NOT ILLUSTRATED

FIG. ITEM	PART NUMBER	AIRLINE STOCK NUMBER	NOMENCLATURE 1234567	EFF CODE	UNITS PER ASSY
370A	A225400208-000		. . DEVICE ASSY-EMERGENCY UNLOCKING,SINGLE DOOR used on 001A, 001B, 001C, 001D, 001E, 001F, 001G, 001H, 001J, 001K, 001L, 001M, 001N		001
380A	A225400208-200		. . . HOUSING-EMERGENCY UN-LOCKING DEVICE used on 370A		001
390A	A225400208-204		. . . STRIKE-EMERGENCY UN-LOCKING DEVICE used on 370A		001
400A	A225400208-202		. . . PIVOT-EMERGENCY UN-LOCKING DEVICE used on 370A		001
410A	A225400208-210		. . . PIN used on 370A		001
420A	SM1275-1KNM04		. . . CATCH-SNAP used on 370A		001
430A	A225400208-208		. . . BOLT used on 370A		001
440A	A425400488-066		. . HANDLE ASSY used on 001B		002
450A	A425400488-266		. . . HANDLE used on 440A		001
460A	33767		. . . SCREW used on 440A		002
470A	33723		. . . WASHER used on 440A		002
480A	500845		. . . SETSCREW used on 440A		002

- ITEM NOT ILLUSTRATED

FIG. ITEM	PART NUMBER	AIRLINE STOCK NUMBER	NOMENCLATURE 1234567	EFF CODE	UNITS PER ASSY
490A	2336000-9		. . KIT-LAVATORY PICTURE FRAME used on 001G		001
500A	NAS1100-08-4		. . SCREW used on 001G		002
510A	4421054-0D0		. . HOSE used on 001K		001
520A	NAS1096-2-10		. . SCREW BUY PN NAS1801-08-10 used on 001K		002
530A	NAS1149C0332R		. . WASHER used on 001K		002
540A	MS21919WCH8		. . CLAMP BUY PN AS21919WCH08 used on 001K		002
-550A	A225400216-314		. . STRIP-KICK POST VSB A2-254-25-032 used on 001N		001

- ITEM NOT ILLUSTRATED

THIS PAGE IS INTENTIONALLY LEFT BLANK

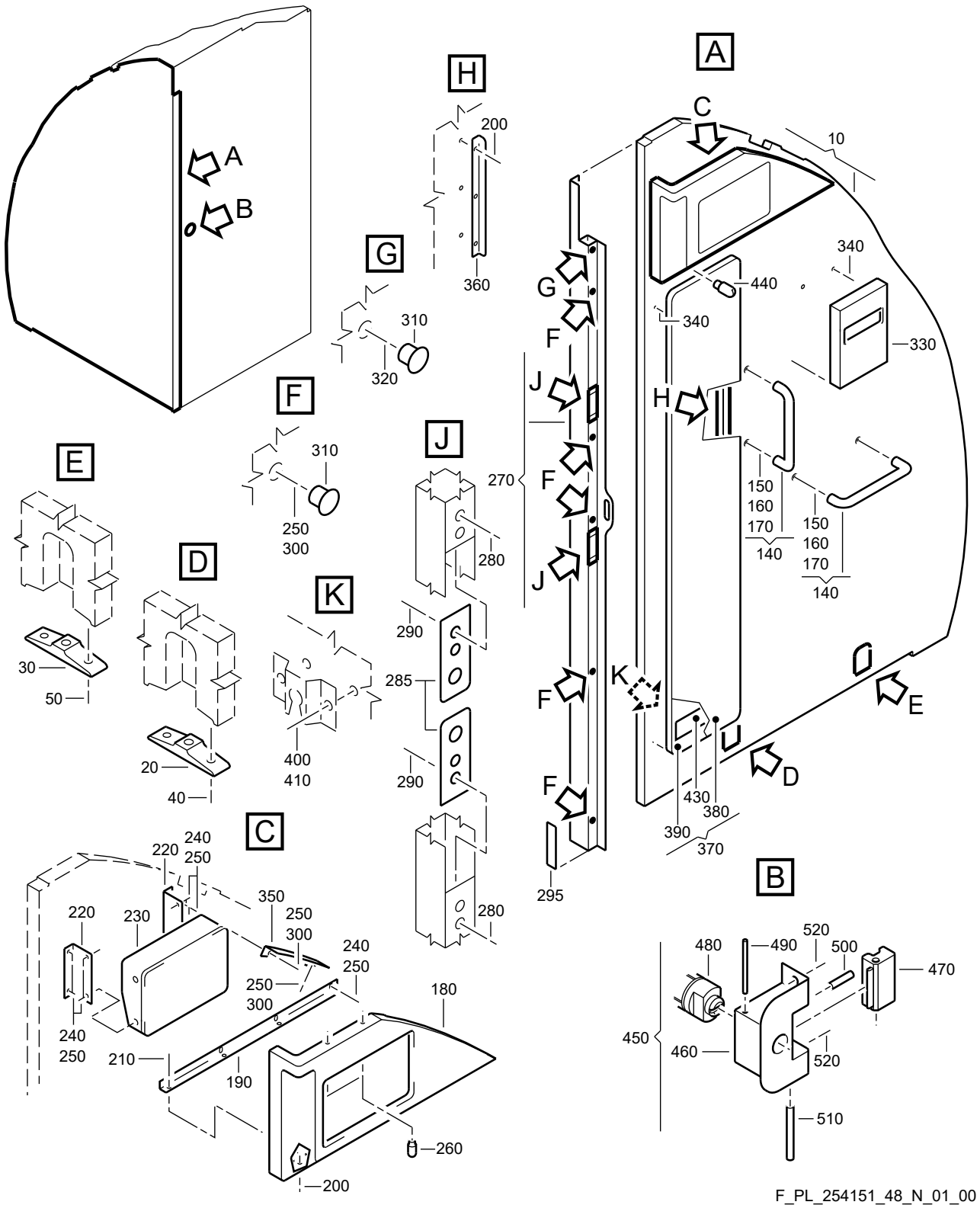

WALL-SIDE
Figure 48N/EN254151SHEET48N01

FIG. ITEM	PART NUMBER	AIRLINE STOCK NUMBER	NOMENCLATURE 1234567	EFF CODE	UNITS PER ASSY
48N					
-001A	D2547161202865		. WALL-SIDE NP POST SB 25-1674 used on 040N (25415141M) SEE 25-41-51-41M FOR NHA		RF
-001B	D2547161203465		. WALL-SIDE NP POST SB 25-1674 used on 040N (25415142N) SEE 25-41-51-42N FOR NHA		RF
010A	A225411230-578		. . WALL ASSY-SIDE,AFT POST SB 25-1674 used on 001A, 001B		001
020A	A225400232-208		. . . FITTING used on 010A		001
030A	A225400232-216		. . . FITTING used on 010A		001
040A	ABS0704-6-50		. . . SCREW used on 010A		002
050A	ABS0705-6-50		. . . SCREW used on 010A		002
-060A	NAS1833C08-370		. . . INSERT used on 010A		073
-070A	NSA5054-08		. . . INSERT used on 010A		003
-080A	NAS1835C08		. . . INSERT used on 010A		012
-090A	NAS1833C3-370		. . . INSERT used on 010A		023
-100A	NSA5054-5		. . . INSERT used on 010A		012

- ITEM NOT ILLUSTRATED

FIG. ITEM	PART NUMBER	AIRLINE STOCK NUMBER	NOMENCLATURE 1234567	EFF CODE	UNITS PER ASSY
-110A	NSA5054-3		. . . INSERT used on 010A		002
-120A	NSA5054-4		. . . INSERT used on 010A		006
-130A	NSA935405-01		. . . MOUNT used on 010A		010
140A	550-33-300MBB		. . . HANDLE ASSY used on 010A		002
150A	S7224		. . . . SCREW-SPECIAL used on 140A		002
160A	8534		. . . . PIN-SECURITY used on 140A		002
170A	8587		. . . . WASHER-SPECIAL used on 140A		002
180A	A225401410-518		. . COVER-OXYGEN CONTAIN-ER ASSY POST SB 25-1674 used on 001A, 001B		001
190A	A225400450-204		. . ANGLE used on 001A, 001B		001
200A	NAS1102-08-5		. . SCREW used on 001A, 001B		007
210A	NSA5067-08-1		. . NUT used on 001A, 001B		004
220A	A225400450-202		. . ANGLE used on 001A, 001B		002
230A	22C150150460004		. . CONTAINER ASSY-OXYGEN POST SB 25-1674 used on 001A, 001B		001

- ITEM NOT ILLUSTRATED

FIG. ITEM	PART NUMBER	AIRLINE STOCK NUMBER	NOMENCLATURE 1234567	EFF CODE	UNITS PER ASSY
240A	NAS1801-08-5		. . SCREW used on 001A, 001B		012
250A	NAS1149CN832R		. . WASHER used on 001A, 001B		025
260A	A225400451-202		. . STUD used on 001A, 001B		002
270A	A225401222-812		. . POST ASSY POST SB 25-1674 used on 001A, 001B		001
280A	NAS514P832-4		. . . SCREW used on 270A		008
285A	A225400221-202		. . . PLATE used on 270A		004
290A	MS21075L08E		. . . NUT used on 270A		008
295A	A225400216-314		. . . PLATE-SCUFF used on 270A		001
300A	NAS1801-08-7		. . SCREW used on 001A, 001B		013
310A	A225400252-500		. . CAP POST SB 25-1674 used on 001A, 001B		006
320A	NAS1801-3-9		. . SCREW used on 001A, 001B		001
330A	A2547577008200		. . DISPENSER-TOILET SEAT COVER POST SB 25-1674 used on 001A, 001B		001

- ITEM NOT ILLUSTRATED

FIG. ITEM	PART NUMBER	AIRLINE STOCK NUMBER	NOMENCLATURE 1234567	EFF CODE	UNITS PER ASSY
340A	NAS1100-08-4		. . SCREW used on 001A, 001B		007
350A	A225401236-200		. . ANGLE used on 001A, 001B		001
360A	A325400471-506		. . SECTION POST SB 25-1674 used on 001A, 001B		001
370A	A225400470-008		. . MIRROR ASSY POST SB 25-1674 used on 001A, 001B		001
380A	A225400470-208		. . . MIRROR used on 370A		001
390A	A225400470-108		. . . PANEL-MIRROR used on 370A		001
400A	NAS1100-06-3		. . . . SCREW used on 390A		010
410A	NAS1149CN632R		. . . . WASHER used on 390A		010
-420A	NSA5345-06C		. . . . INSERT used on 390A		010
430A	SC0TCH4032-25		. . . FILM-ADHESIVE USE AS REQUIRED SC0TCHM0UNT4032-25 used on 370A		AR
440A	A225400451-200		. . STUD POST SB 25-1674 used on 001A, 001B		001
450A	A225400208-000		. . DEVICE ASSY-EMERGENCY UNLOCKING,SINGLE DOOR used on 001B		001

- ITEM NOT ILLUSTRATED

FIG. ITEM	PART NUMBER	AIRLINE STOCK NUMBER	NOMENCLATURE 1234567	EFF CODE	UNITS PER ASSY
460A	A225400208-200		. . . HOUSING-EMERGENCY UN-LOCKING DEVICE used on 450A		001
470A	A225400208-204		. . . STRIKE-EMERGENCY UN-LOCKING DEVICE used on 450A		001
480A	A225400208-202		. . . PIVOT-EMERGENCY UN-LOCKING DEVICE used on 450A		001
490A	A225400208-210		. . . PIN used on 450A		001
500A	SM1275-1KNM04		. . . CATCH-SNAP used on 450A		001
510A	A225400208-208		. . . BOLT used on 450A		001
520A	NAS514P832-7		. . SCREW used on 001B		002

- ITEM NOT ILLUSTRATED

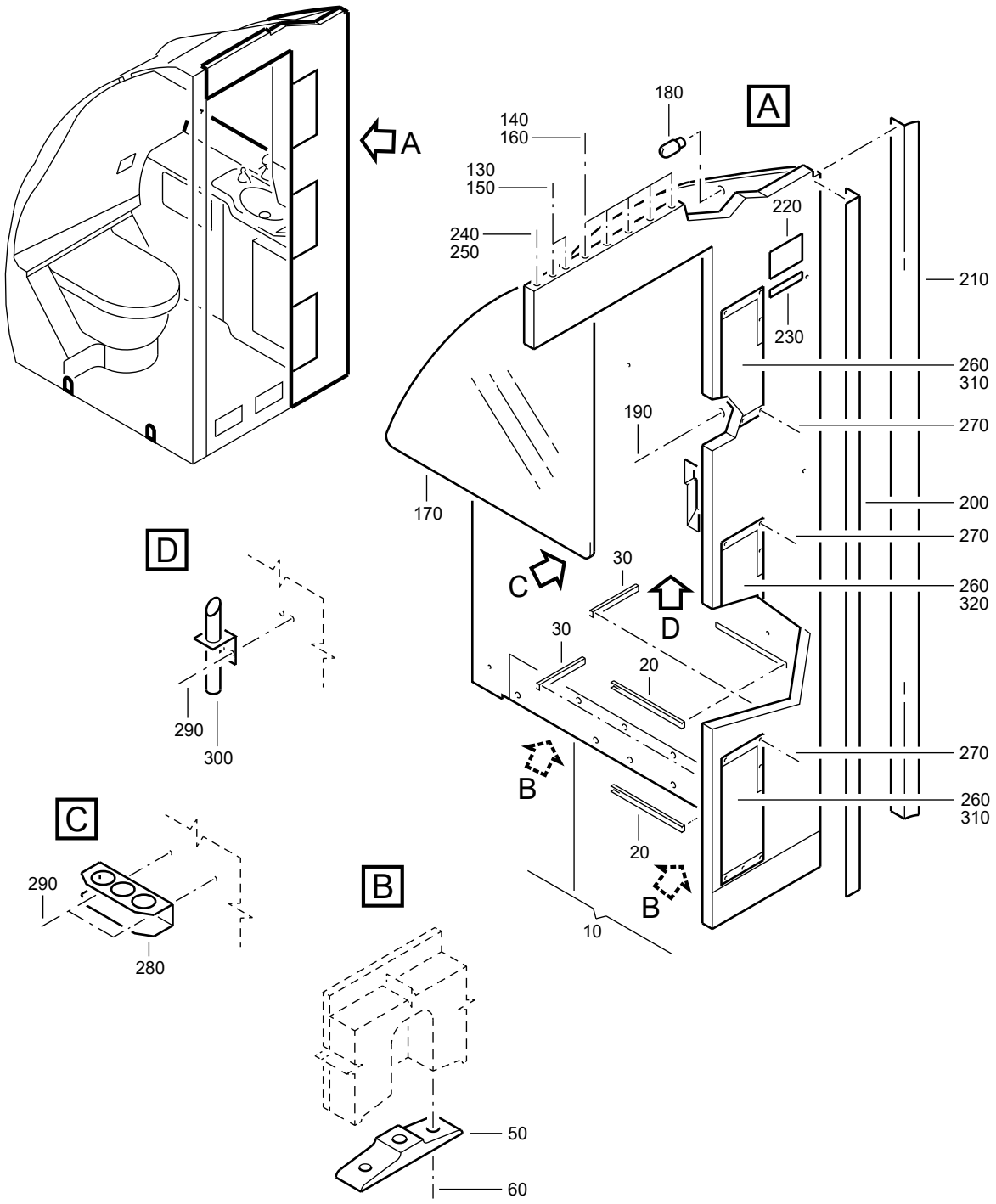

F_PL_254151_49_0_01_00

HOUSING
Figure 49/EN254151SHEET49001

FIG. ITEM	PART NUMBER	AIRLINE STOCK NUMBER	NOMENCLATURE 1234567	EFF CODE	UNITS PER ASSY
49					
-001A	D2549010401666		. HOUSING NP used on 050E (25415142J) SEE 25-41-51-42J FOR NHA		RF
-001B	D2549020409466		. HOUSING NP used on 050A (25415142M), 050C (25415142N) SEE 25-41-51-42M FOR NHA SEE 25-41-51-42N FOR NHA		RF
-001C	D2549010403866		. HOUSING NP used on 050E (25415142M), 050E (25415142T) SEE 25-41-51-42M FOR NHA SEE 25-41-51-42T FOR NHA		RF
-001D	D2549010402466		. HOUSING NP used on 050E (25415142N), 050J (25415142T) SEE 25-41-51-42N FOR NHA SEE 25-41-51-42T FOR NHA		RF
-001E	D2549030413466		. HOUSING NP used on 050F (25415142N), 050L (25415142T) SEE 25-41-51-42N FOR NHA SEE 25-41-51-42T FOR NHA		RF
-001F	D2549030414666		. HOUSING NP used on 050G (25415142N), 050G (25415142S) SEE 25-41-51-42N FOR NHA SEE 25-41-51-42S FOR NHA		RF
-001G	D2549020411266		. HOUSING NP used on 050H (25415142Q) SEE 25-41-51-42Q FOR NHA		RF

- ITEM NOT ILLUSTRATED

FIG. ITEM	PART NUMBER	AIRLINE STOCK NUMBER	NOMENCLATURE 1234567	EFF CODE	UNITS PER ASSY
-001H	D2549010405066		. HOUSING NP used on 050B (25415142Q) SEE 25-41-51-42Q FOR NHA		RF
-001J	D2549030700666		. HOUSING NP used on 050C (25415142Q) SEE 25-41-51-42Q FOR NHA		RF
-001K	D2549010405266		. HOUSING NP used on 050D (25415142Q) SEE 25-41-51-42Q FOR NHA		RF
-001L	D2549030700866		. HOUSING NP used on 050E (25415142Q), 050E (25415142U) SEE 25-41-51-42Q FOR NHA SEE 25-41-51-42U FOR NHA		RF
-001M	D2549020411666		. WALL-SIDE NP used on 050J (25415142Q) SEE 25-41-51-42Q FOR NHA		RF
-001N	D2549010405866		. HOUSING NP used on 050A (25415142S), 050B (25415142U) SEE 25-41-51-42S FOR NHA SEE 25-41-51-42U FOR NHA		RF
010A	A225401305-662		. . HOUSING ASSY used on 001A		001
-010B	A225401305-650		. . HOUSING ASSY used on 001B		001
-010C	A225401305-664		. . HOUSING ASSY used on 001C		001
-010D	A225401305-668		. . HOUSING ASSY used on 001D		001

- ITEM NOT ILLUSTRATED

FIG. ITEM	PART NUMBER	AIRLINE STOCK NUMBER	NOMENCLATURE 1234567	EFF CODE	UNITS PER ASSY
-010E	A225401305-672		. . HOUSING ASSY used on 001E		001
-010F	A225401305-670		. . HOUSING ASSY used on 001F		001
-010G	A225401305-682		. . HOUSING ASSY used on 001G		001
-010H	A225401305-648		. . HOUSING ASSY used on 001H, 001N		001
-010J	A225401305-676		. . HOUSING ASSY used on 001J		001
-010K	A225401305-678		. . HOUSING ASSY used on 001K		001
-010L	A225401305-680		. . HOUSING ASSY used on 001L		001
-010M	A225401305-684		. . HOUSING ASSY used on 001M		001
020A	0-112-0016-2000		. . . STRIP-SLIDING used on 010A, 010B, 010C, 010D, 010E, 010F, 010G, 010H, 010J, 010K, 010L, 010M		002
030A	0-112-0015-2000		. . . STRIP-SLIDING used on 010A, 010B, 010C, 010D, 010E, 010F, 010G, 010H, 010J, 010K, 010L, 010M		002
-040A	NSA935405-01		. . . MOUNT used on 010A, 010B, 010C, 010D, 010E, 010F, 010G, 010H, 010J, 010K, 010L, 010M		035

- ITEM NOT ILLUSTRATED

FIG. ITEM	PART NUMBER	AIRLINE STOCK NUMBER	NOMENCLATURE 1234567	EFF CODE	UNITS PER ASSY
050A	A225400232-208		. . . FITTING used on 010A, 010B, 010C, 010D, 010E, 010F, 010G, 010H, 010J, 010K, 010L, 010M		002
060A	ABS0704-6-50		. . . SCREW used on 010A, 010B, 010C, 010D, 010E, 010F, 010G, 010H, 010J, 010K, 010L, 010M		004
-070A	NAS1833C08-370		. . . INSERT used on 010A, 010B, 010C, 010D, 010E, 010F, 010G, 010H, 010J, 010K, 010L, 010M		094
-080A	NAS1835C08		. . . INSERT used on 010A, 010B, 010C, 010D, 010E, 010F, 010G, 010H, 010J, 010K, 010L, 010M		018
-090A	NSA5345-06C		. . . INSERT used on 010A, 010B, 010C, 010D, 010E, 010F, 010G, 010H, 010J, 010K, 010L, 010M		004
-100A	NSA5345-08C		. . . INSERT used on 010A, 010B, 010C, 010D, 010E, 010F, 010G, 010H, 010J, 010K, 010L, 010M		003
-110A	EF1842-06C2		. . . INSERT used on 010A, 010B, 010C, 010D, 010E, 010F, 010G, 010H, 010J, 010K, 010L, 010M		004
-120A	NSA5054-08		. . . INSERT used on 010A, 010B, 010C, 010D, 010E, 010F, 010G, 010H, 010J, 010K, 010L, 010M		004

- ITEM NOT ILLUSTRATED

FIG. ITEM	PART NUMBER	AIRLINE STOCK NUMBER	NOMENCLATURE 1234567	EFF CODE	UNITS PER ASSY
130A	NAS1096-2-8		. . . SCREW BUY PN NAS1801-08-8 used on 010A, 010B, 010C, 010D, 010E, 010F, 010G, 010H, 010J, 010K, 010L, 010M		002
140A	NAS1096-3-8		. . . SCREW BUY PN NAS1801-3-8 used on 010A, 010B, 010C, 010D, 010E, 010F, 010G, 010H, 010J, 010K, 010L, 010M		005
150A	NAS1149CN832R		. . . WASHER used on 010A, 010B, 010C, 010D, 010E, 010F, 010G, 010H, 010J, 010K, 010L, 010M		002
160A	NAS1149C0332R		. . . WASHER used on 010A, 010B, 010C, 010D, 010E, 010F, 010G, 010H, 010J, 010K, 010L, 010M		005
170A	A2-254-0006-01		. . MIRROR-GLASS used on 001A, 001B, 001C, 001D, 001E, 001F, 001G, 001H, 001J, 001K, 001L, 001M, 001N		001
180A	A225400451-200		. . STUD used on 001A, 001B, 001C, 001D, 001E, 001F, 001G, 001H, 001J, 001K, 001L, 001M, 001N		001
190A	NAS1100-08-4		. . SCREW used on 001A, 001B, 001C, 001D, 001E, 001F, 001G, 001H, 001J, 001K, 001L, 001M, 001N		003

- ITEM NOT ILLUSTRATED

FIG. ITEM	PART NUMBER	AIRLINE STOCK NUMBER	NOMENCLATURE 1234567	EFF CODE	UNITS PER ASSY
200A	A225400224-212		. . SECTION used on 001A, 001B, 001C, 001D, 001E, 001F, 001G, 001H, 001J, 001K, 001L, 001M, 001N		001
210A	ABS0307A2-11		. . SECTION-SEALING USE AS REQUIRED REQUIRED LENGTH 1965 MM BUY PN ABS0307AB2-11 used on 001A, 001B, 001C, 001D, 001E, 001F, 001G, 001H, 001J, 001K, 001L, 001M, 001N		AR
220A	A225400500-200		. . PLACARD used on 001A, 001B, 001C, 001D, 001E, 001F, 001G, 001H, 001J, 001K, 001L, 001M, 001N		001
230A	A225400500-202		. . PLACARD used on 001A, 001B, 001C, 001D, 001E, 001F, 001G, 001H, 001J, 001K, 001L, 001M, 001N		001
240A	NAS1096-3-10		. . SCREW BUY PN NAS1801-3-10 used on 001A, 001B, 001C, 001D, 001E, 001F, 001G, 001H, 001J, 001K, 001L, 001M, 001N		001
250A	NAS1149C0332R		. . WASHER used on 001A, 001B, 001C, 001D, 001E, 001F, 001G, 001H, 001J, 001K, 001L, 001M, 001N		001
260A	D2528641100600		. . COVER-DECOR used on 001A, 001B, 001C, 001D, 001E, 001F, 001G, 001J, 001K, 001L		003

- ITEM NOT ILLUSTRATED

FIG. ITEM	PART NUMBER	AIRLINE STOCK NUMBER	NOMENCLATURE 1234567	EFF CODE	UNITS PER ASSY
270A	NAS1102-04-6		. . SCREW used on 001A, 001B, 001C, 001D, 001E, 001F, 001G, 001H, 001J, 001K, 001L, 001M, 001N		018
280A	A325400470-204		. . HOLDER-PERFUME used on 001D		001
290A	NAS514P632-4		. . SCREW used on 001D		004
300A	1245-02		. . VASE used on 001D		001
310A	D2528641100600		. . COVER-DECOR used on 001H, 001M, 001N		002
320A	D2528641101800		. . COVER-DECOR used on 001H		001
-320B	D2528641102000		. . COVER-DECOR used on 001M, 001N		001

- ITEM NOT ILLUSTRATED

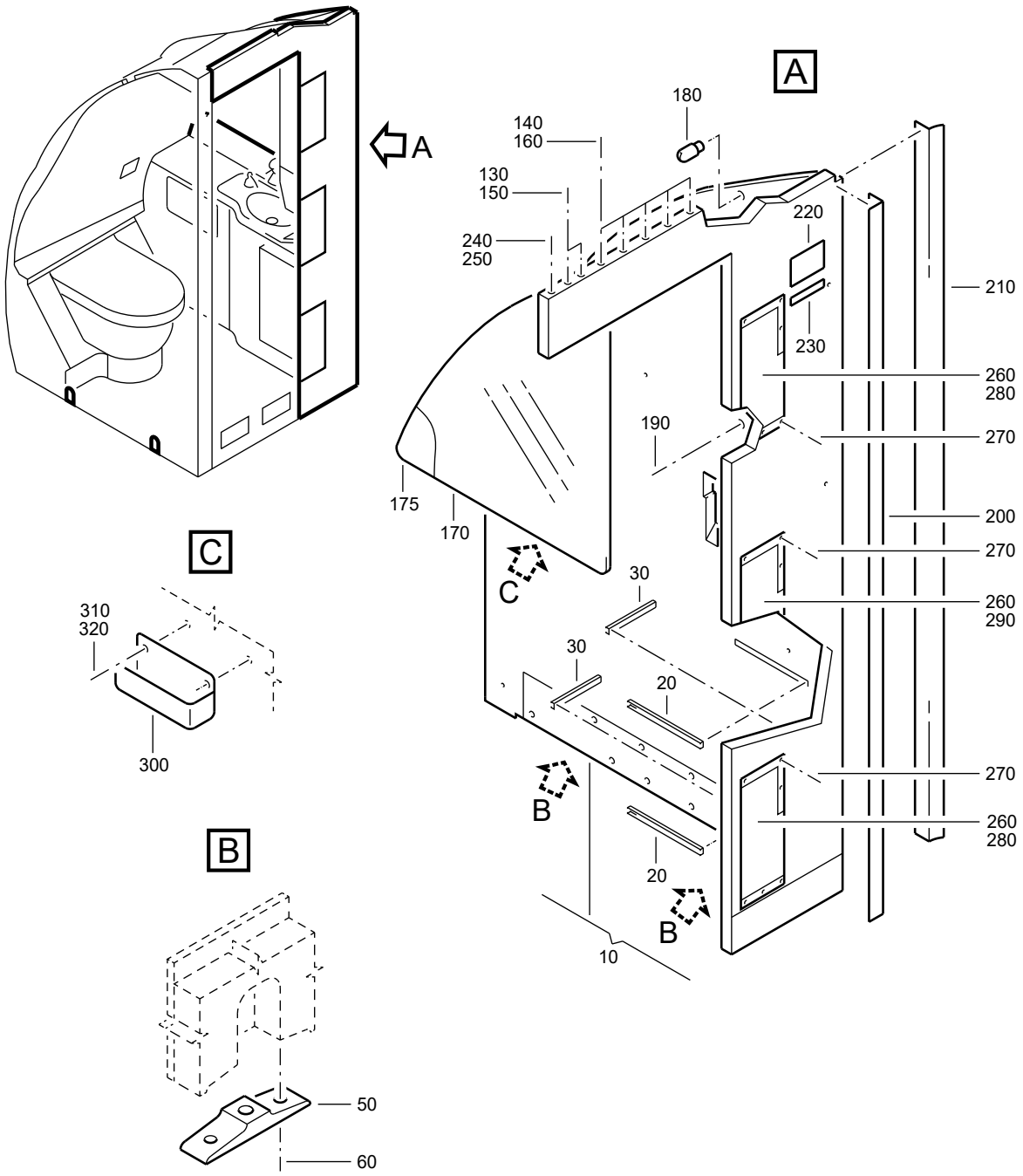

F_PL_254151_49_A_01_00

WALL-SIDE
Figure 49A/EN254151SHEET49A01

FIG. ITEM	PART NUMBER	AIRLINE STOCK NUMBER	NOMENCLATURE 1234567		EFF CODE	UNITS PER ASSY
49A						
-001A	D2549020411466		. WALL-SIDE used on 050D (25415142P) SEE 25-41-51-42P FOR NHA	NP		RF
-001B	D2549020412266		. HOUSING used on 050A (25415142R), 050D (25415142U) SEE 25-41-51-42R FOR NHA SEE 25-41-51-42U FOR NHA	NP		RF
-001C	D2549020411866		. HOUSING used on 050B (25415142R) SEE 25-41-51-42R FOR NHA	NP		RF
-001D	D2549020411066		. HOUSING used on 050F (25415142Q) SEE 25-41-51-42Q FOR NHA	NP		RF
-001E	D2549020412066		. HOUSING used on 050E (25415142R), 050B (25415142S) SEE 25-41-51-42R FOR NHA SEE 25-41-51-42S FOR NHA	NP		RF
-001F	D2549040501466		. HOUSING used on 050G (25415142Q) SEE 25-41-51-42Q FOR NHA	NP		RF
-001G	D2549030701066		. HOUSING used on 050C (25415142S) SEE 25-41-51-42S FOR NHA	NP		RF
-001H	D2549030701866		. HOUSING used on 050G (25415142R), 050L (25415142S) SEE 25-41-51-42R FOR NHA SEE 25-41-51-42S FOR NHA	NP		RF

- ITEM NOT ILLUSTRATED

FIG. ITEM	PART NUMBER	AIRLINE STOCK NUMBER	NOMENCLATURE 1234567	EFF CODE	UNITS PER ASSY
-001J	D2549030701666		. HOUSING NP used on 050C (25415142R), 050G (25415142T) SEE 25-41-51-42R FOR NHA SEE 25-41-51-42T FOR NHA		RF
-001K	D2549020413266		. HOUSING NP used on 050K (25415142R) SEE 25-41-51-42R FOR NHA		RF
-001L	D2549030702066		. HOUSING NP used on 050M (25415142R) SEE 25-41-51-42R FOR NHA		RF
-001M	D2549030702266		. HOUSING NP used on 050E (25415142P) SEE 25-41-51-42P FOR NHA		RF
-001N	D2549010401666		. HOUSING NP POST SB 25-1473 used on 050M (25415142Q), 050J (25415142R) SEE 25-41-51-42Q FOR NHA SEE 25-41-51-42R FOR NHA		RF
010A	A225401305-686		. . HOUSING ASSY used on 001A		001
-010B	A225401305-690		. . HOUSING ASSY used on 001B		001
-010C	A225401305-688		. . HOUSING ASSY used on 001C		001
-010D	A225401305-616		. . HOUSING ASSY used on 001D, 001G		001
-010E	A225401305-692		. . HOUSING ASSY used on 001E, 001K		001

- ITEM NOT ILLUSTRATED

FIG. ITEM	PART NUMBER	AIRLINE STOCK NUMBER	NOMENCLATURE 1234567	EFF CODE	UNITS PER ASSY
-010F	A225401305-630		. . HOUSING ASSY used on 001F, 001N		001
-010G	A225401305-694		. . HOUSING ASSY used on 001H		001
-010H	A225401305-646		. . HOUSING ASSY used on 001J		001
-010J	A225401305-698		. . HOUSING ASSY used on 001L		001
-010K	A225401305-696		. . HOUSING ASSY used on 001M		001
020A	0-112-0016-2000		. . . STRIP-SLIDING used on 010A, 010B, 010C, 010D, 010E, 010F, 010G, 010H, 010J, 010K		002
030A	0-112-0015-2000		. . . STRIP-SLIDING used on 010A, 010B, 010C, 010D, 010E, 010F, 010G, 010H, 010J, 010K		002
-040A	NSA935405-01		. . . MOUNT used on 010A, 010B, 010C, 010D, 010E, 010F, 010G, 010H, 010J, 010K		035
050A	A225400232-208		. . . FITTING used on 010A, 010B, 010C, 010D, 010E, 010F, 010G, 010H, 010J, 010K		002
060A	ABS0704-6-50		. . . SCREW used on 010A, 010B, 010C, 010D, 010E, 010F, 010G, 010H, 010J, 010K		004

- ITEM NOT ILLUSTRATED

FIG. ITEM	PART NUMBER	AIRLINE STOCK NUMBER	NOMENCLATURE 1234567	EFF CODE	UNITS PER ASSY
-070A	NAS1833C08-370		. . . INSERT used on 010A, 010B, 010C, 010D, 010E, 010F, 010G, 010H, 010J, 010K		094
-080A	NAS1835C08		. . . INSERT used on 010A, 010B, 010C, 010D, 010E, 010F, 010G, 010H, 010J, 010K		018
-090A	NSA5345-06C		. . . INSERT used on 010A, 010B, 010C, 010D, 010E, 010F, 010G, 010H, 010J, 010K		004
-100A	NSA5345-08C		. . . INSERT used on 010A, 010B, 010C, 010D, 010E, 010F, 010G, 010H, 010J, 010K		003
-110A	EF1842-06C2		. . . INSERT used on 010A, 010B, 010C, 010D, 010E, 010F, 010G, 010H, 010J, 010K		004
-120A	NSA5054-08		. . . INSERT used on 010A, 010B, 010C, 010D, 010E, 010F, 010G, 010H, 010J, 010K		004
130A	NAS1096-2-8		. . . SCREW BUY PN NAS1801-08-8 used on 010A, 010B, 010C, 010D, 010E, 010F, 010G, 010H, 010J, 010K		002

- ITEM NOT ILLUSTRATED

FIG. ITEM	PART NUMBER	AIRLINE STOCK NUMBER	NOMENCLATURE 1234567	EFF CODE	UNITS PER ASSY
140A	NAS1096-3-8		. . . SCREW BUY PN NAS1801-3-8 used on 010A, 010B, 010C, 010D, 010E, 010F, 010G, 010H, 010J, 010K		005
150A	NAS1149CN832R		. . . WASHER used on 010A, 010B, 010C, 010D, 010E, 010F, 010G, 010H, 010J, 010K		002
160A	NAS1149C0332R		. . . WASHER used on 010A, 010B, 010C, 010D, 010E, 010F, 010G, 010H, 010J, 010K		005
170A	A2-254-0006-01		. . MIRROR-GLASS used on 001A, 001B, 001C, 001D, 001E, 001F, 001G, 001H, 001J, 001K, 001L, 001M, 001N		001
175A	120801		. . FOIL-SHADING,MIRROR used on 001J		001
180A	A225400451-200		. . STUD used on 001A, 001B, 001C, 001D, 001E, 001F, 001G, 001H, 001J, 001K, 001L, 001M, 001N		001
190A	NAS1100-08-4		. . SCREW used on 001A, 001B, 001C, 001D, 001E, 001F, 001G, 001H, 001J, 001K, 001L, 001M, 001N		003
200A	A225400224-212		. . SECTION used on 001A, 001B, 001C, 001D, 001E, 001F, 001G, 001H, 001J, 001K, 001L, 001M, 001N		001

- ITEM NOT ILLUSTRATED

FIG. ITEM	PART NUMBER	AIRLINE STOCK NUMBER	NOMENCLATURE 1234567	EFF CODE	UNITS PER ASSY
210A	ABS0307A2-11		. . SECTION-SEALING USE AS REQUIRED BUY PN ABS0307AB2-11 used on 001A, 001B, 001C, 001D, 001E, 001F, 001G, 001H, 001J, 001K, 001L, 001M, 001N		AR
220A	A225400500-200		. . PLACARD used on 001A, 001B, 001C, 001D, 001E, 001F, 001G, 001H, 001J, 001K, 001L, 001M, 001N		001
230A	A225400500-202		. . PLACARD used on 001A, 001B, 001C, 001D, 001E, 001F, 001G, 001H, 001J, 001K, 001L, 001M, 001N		001
240A	NAS1096-3-10		. . SCREW BUY PN NAS1801-3-10 used on 001A, 001B, 001C, 001D, 001E, 001F, 001G, 001H, 001J, 001K, 001L, 001M, 001N		001
250A	NAS1149C0332R		. . WASHER used on 001A, 001B, 001C, 001D, 001E, 001F, 001G, 001H, 001J, 001K, 001L, 001M, 001N		001
260A	D2528641100600		. . COVER-DECOR used on 001B, 001C, 001E, 001H, 001L, 001M		003
270A	NAS1102-04-6		. . SCREW used on 001A, 001B, 001C, 001D, 001E, 001F, 001G, 001H, 001J, 001K, 001L, 001M, 001N		018
280A	D2528641100600		. . COVER-DECOR used on 001A, 001D, 001F, 001G, 001J, 001K, 001N		002

- ITEM NOT ILLUSTRATED

FIG. ITEM	PART NUMBER	AIRLINE STOCK NUMBER	NOMENCLATURE 1234567	EFF CODE	UNITS PER ASSY
290A	D2528641102200		. . COVER-DECOR POST SB 25-1473 used on 001D, 001G, 001K, 001N		001
-290B	D2528641102000		. . COVER-DECOR POST SB 25-1400 used on 001A, 001F, 001J		001
300A	1240-52		. . HOLDER-COSMETICS used on 001L		001
310A	NAS514P832-6		. . SCREW used on 001L		002
320A	NAS1149C0832R		. . WASHER used on 001L		002

- ITEM NOT ILLUSTRATED

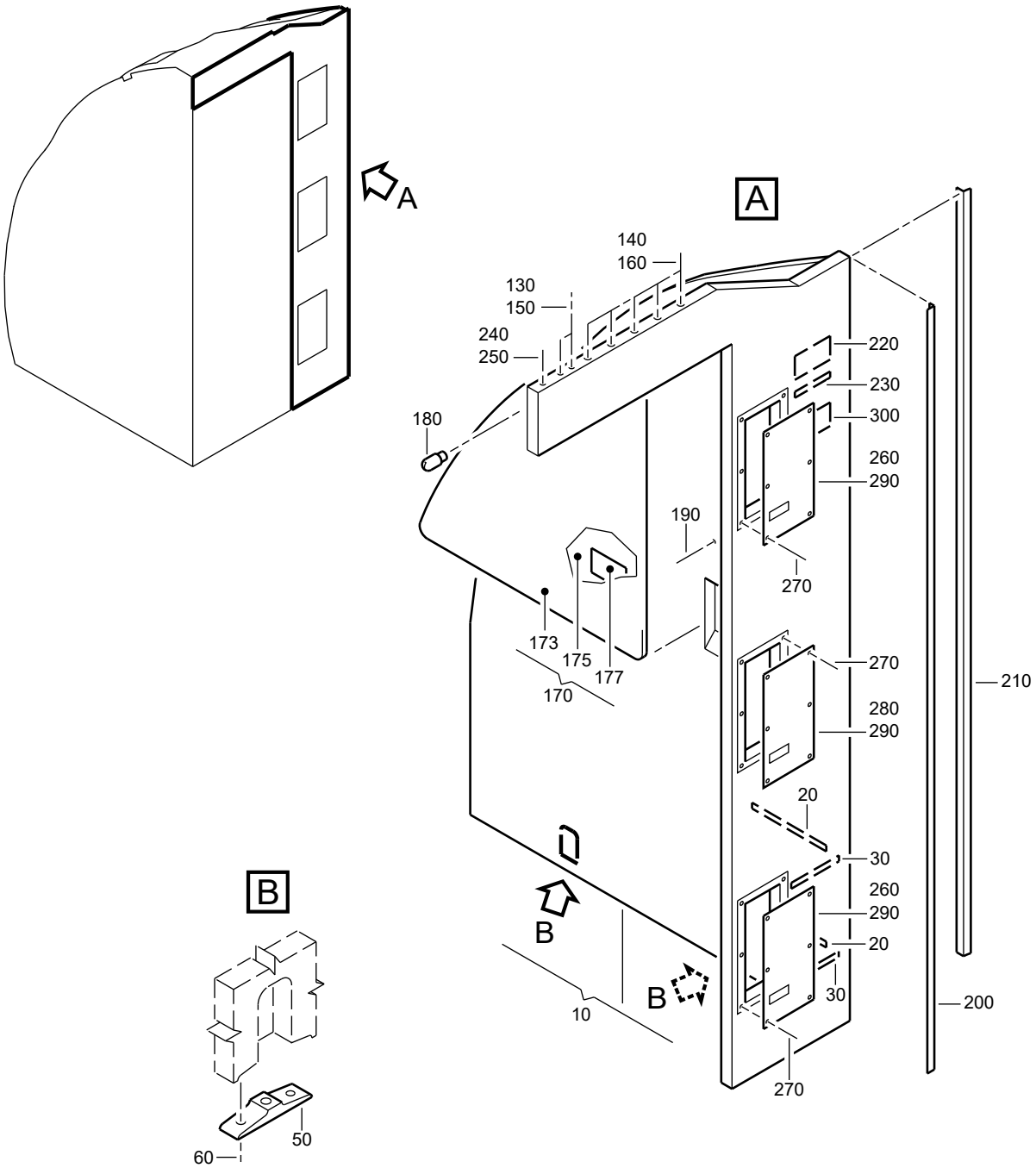

F_PL_254151_49_B_01_01

HOUSING
Figure 49B/EN254151SHEET49B01

FIG. ITEM	PART NUMBER	AIRLINE STOCK NUMBER	NOMENCLATURE 1234567		EFF CODE	UNITS PER ASSY
49B						
-001A	D2549020413466		. HOUSING used on 050F (25415142P) SEE 25-41-51-42P FOR NHA	NP		RF
-001B	D2549020414066		. HOUSING used on 050K (25415142S) SEE 25-41-51-42S FOR NHA	NP		RF
-001C	D2549020414666		. HOUSING used on 050A (25415142T) SEE 25-41-51-42T FOR NHA	NP		RF
-001D	D2549030702866		. HOUSING used on 050C (25415142T) SEE 25-41-51-42T FOR NHA	NP		RF
-001E	D2549020413866		. HOUSING used on 050A (25415142U) SEE 25-41-51-42U FOR NHA	NP		RF
-001F	D2549020302866		. HOUSING PRE VSB A2-254-25-130 used on 050H (25415142P) SEE 25-41-51-42P FOR NHA	NP		RF
-001G	D2549030703066		. HOUSING used on 050F (25415142U) SEE 25-41-51-42U FOR NHA	NP		RF
-001H	D2549020513266		. HOUSING used on 050J (25415141W) SEE 25-41-51-41W FOR NHA	NP		RF
-001J	D2549020708866		. HOUSING used on 050M (254151410), 050K (25415141F) SEE 25-41-51-410 FOR NHA SEE 25-41-51-41F FOR NHA	NP		RF

- ITEM NOT ILLUSTRATED

FIG. ITEM	PART NUMBER	AIRLINE STOCK NUMBER	NOMENCLATURE 1234567		EFF CODE	UNITS PER ASSY
-001K	D2549010613666		. HOUSING used on 050M (25415141Z), 050L (25415142A), 050L(25415142F) SEE 25-41-51-41Z FOR NHA SEE 25-41-51-42A FOR NHA SEE 25-41-51-42F FOR NHA	NP		RF
-001L	D2549010504866		. HOUSING used on 050L (25415101K) SEE 25-41-51-01K FOR NHA	NP		RF
-001M	D2549020414166		. HOUSING used on 050M (25415142S) SEE 25-41-51-42S FOR NHA	NP		RF
-001N	D2547160103466		. HOUSING POST SB 35-1035 used on 050J (25415142U) SEE 25-41-51-42U FOR NHA	NP		RF
-001P	R22540119607066		. HOUSING POST VSB A2-254-25-130 used on 050K (25415142P) SEE 25-41-51-42P FOR NHA	NP		RF
010A	A225401305-606		. . HOUSING ASSY PRE VSB A2-254-25-130 used on 001A, 001F			001
-010B	A225401305-674		. . HOUSING ASSY used on 001B, 001G, 001M			001
-010C	A225401305-702		. . HOUSING ASSY used on 001C			001
-010D	A225401305-680		. . HOUSING ASSY used on 001D			001
-010E	A225401305-700		. . HOUSING ASSY POST SB 35-1035 used on 001E, 001N			001

- ITEM NOT ILLUSTRATED

FIG. ITEM	PART NUMBER	AIRLINE STOCK NUMBER	NOMENCLATURE 1234567	EFF CODE	UNITS PER ASSY
-010F	A225401304-618		. . HOUSING ASSY used on 001H		001
-010G	A2254013058570		. . HOUSING ASSY POST SB 25-1314 used on 001J		001
-010H	A2254013058514		. . HOUSING ASSY POST SB 25-1314 used on 001K		001
-010J	A2254013058504		. . HOUSING ASSY POST SB 25-1314 used on 001L		001
-010K	A225401305-778		. . HOUSING ASSY POST VSB A2-254-25-130 used on 001P		001
020A	0-112-0016-2000		. . . STRIP-SLIDING USE AS REQUIRED used on 010A, 010B, 010C, 010D, 010E, 010F, 010G, 010H, 010J, 010K		AR
030A	0-112-0015-2000		. . . STRIP-SLIDING USE AS REQUIRED used on 010A, 010B, 010C, 010D, 010E, 010F, 010G, 010H, 010J, 010K		AR
-040A	NSA935405-01		. . . MOUNT used on 010A, 010B, 010C, 010D, 010E, 010F, 010G, 010H, 010J, 010K		035
050A	A225400232-208		. . . FITTING used on 010A, 010B, 010C, 010D, 010E, 010F, 010G, 010H, 010J, 010K		002

- ITEM NOT ILLUSTRATED

FIG. ITEM	PART NUMBER	AIRLINE STOCK NUMBER	NOMENCLATURE 1234567	EFF CODE	UNITS PER ASSY
060A	ABS0704-6-50		. . . SCREW used on 010A, 010B, 010C, 010D, 010E, 010F, 010G, 010H, 010J, 010K		004
-070A	NAS1833C08-370		. . . INSERT used on 010A, 010B, 010C, 010D, 010E, 010F, 010G, 010H, 010J, 010K		094
-080A	NAS1835C08		. . . INSERT used on 010A, 010B, 010C, 010D, 010E, 010F, 010G, 010H, 010J, 010K		018
-090A	NSA5345-06C		. . . INSERT used on 010A, 010B, 010C, 010D, 010E, 010F, 010G, 010H, 010J, 010K		004
-100A	NSA5345-08C		. . . INSERT used on 010A, 010B, 010C, 010D, 010E, 010F, 010G, 010H, 010J, 010K		003
-110A	EF1842-06C2		. . . INSERT used on 010A, 010B, 010C, 010D, 010E, 010F, 010G, 010H, 010J, 010K		004
-120A	NSA5054-08		. . . INSERT used on 010A, 010B, 010C, 010D, 010E, 010F, 010G, 010H, 010J, 010K		004
130A	NAS1096-2-8		. . . SCREW BUY PN NAS1801-08-8 used on 010A, 010B, 010C, 010D, 010E, 010F, 010G, 010H, 010J, 010K		002

- ITEM NOT ILLUSTRATED

FIG. ITEM	PART NUMBER	AIRLINE STOCK NUMBER	NOMENCLATURE 1234567	EFF CODE	UNITS PER ASSY
140A	NAS1096-3-8		. . . SCREW BUY PN NAS1801-3-8 used on 010A, 010B, 010C, 010D, 010E, 010F, 010G, 010H, 010J, 010K		005
150A	NAS1149CN832R		. . . WASHER used on 010A, 010B, 010C, 010D, 010E, 010F, 010G, 010H, 010J, 010K		002
160A	NAS1149C0332R		. . . WASHER used on 010A, 010B, 010C, 010D, 010E, 010F, 010G, 010H, 010J, 010K		005
170A	A2-254-0006-01		. . MIRROR-GLASS used on 001A, 001B, 001C, 001D, 001E, 001F, 001G, 001H, 001J, 001K, 001L, 001M, 001N		001
-170B	A225400470-000		. . MIRROR ASSY used on 001A, 001B, 001C, 001D, 001E, 001F, 001G, 001H, 001J, 001K, 001L, 001M, 001N, 001P		001
173A	A225400470-200		. . . MIRROR used on 170B		001
175A	A2-254-0006A01		. . . PANEL-DOOR,MIRROR used on 170B		001
177A	SC0TCH4032-25		. . . FILM-ADHESIVE USE AS REQUIRED SC0TCHM0UNT4032-25 used on 170B		AR

- ITEM NOT ILLUSTRATED

FIG. ITEM	PART NUMBER	AIRLINE STOCK NUMBER	NOMENCLATURE 1234567	EFF CODE	UNITS PER ASSY
180A	A225400451-200		. . STUD used on 001A, 001B, 001C, 001D, 001E, 001F, 001G, 001H, 001J, 001K, 001L, 001M, 001N, 001P		001
190A	NAS1100-08-4		. . SCREW used on 001A, 001B, 001C, 001D, 001E, 001F, 001G, 001H, 001J, 001K, 001L, 001M, 001N, 001P		003
200A	A225400224-212		. . SECTION used on 001A, 001B, 001C, 001D, 001E, 001F, 001G, 001H, 001J, 001K, 001L, 001M, 001N, 001P		001
210A	ABS0307A2-11		. . SECTION-SEALING USE AS REQUIRED BUY PN ABS0307AB2-11 used on 001A, 001B, 001C, 001D, 001E, 001F, 001G, 001H, 001J, 001K, 001L, 001M, 001N, 001P		AR
220A	A225400500-200		. . PLACARD used on 001A, 001B, 001C, 001D, 001E, 001F, 001G, 001H, 001J, 001K, 001L, 001M, 001N, 001P		001
230A	A225400500-202		. . PLACARD used on 001A, 001B, 001C, 001D, 001E, 001F, 001G, 001H, 001J, 001K, 001L, 001M, 001N, 001P		001

- ITEM NOT ILLUSTRATED

FIG. ITEM	PART NUMBER	AIRLINE STOCK NUMBER	NOMENCLATURE 1234567	EFF CODE	UNITS PER ASSY
240A	NAS1096-3-10		. . SCREW BUY PN NAS1801-3-10 used on 001A, 001B, 001C, 001D, 001E, 001F, 001G, 001H, 001J, 001K, 001L, 001M, 001N, 001P		001
250A	NAS1149C0332R		. . WASHER used on 001A, 001B, 001C, 001D, 001E, 001F, 001G, 001H, 001J, 001K, 001L, 001M, 001N, 001P		001
260A	D2528641100600		. . COVER-DECOR used on 001A, 001B, 001E, 001M, 001N		002
270A	NAS1102-04-6		. . SCREW used on 001A, 001B, 001C, 001D, 001E, 001F, 001G, 001H, 001J, 001K, 001L, 001M, 001N, 001P		018
280A	D2528641102000		. . COVER-DECOR used on 001A, 001B		001
-280B	D2528641102200		. . COVER-DECOR POST SB 25-1473 used on 001E, 001M, 001N		001
290A	D2528641100600		. . COVER-DECOR used on 001C, 001D, 001F, 001G, 001H, 001J, 001K, 001L, 001P		003
300A	A225400500-204		. . PLACARD POST SB 35-1035 used on 001N		001

- ITEM NOT ILLUSTRATED

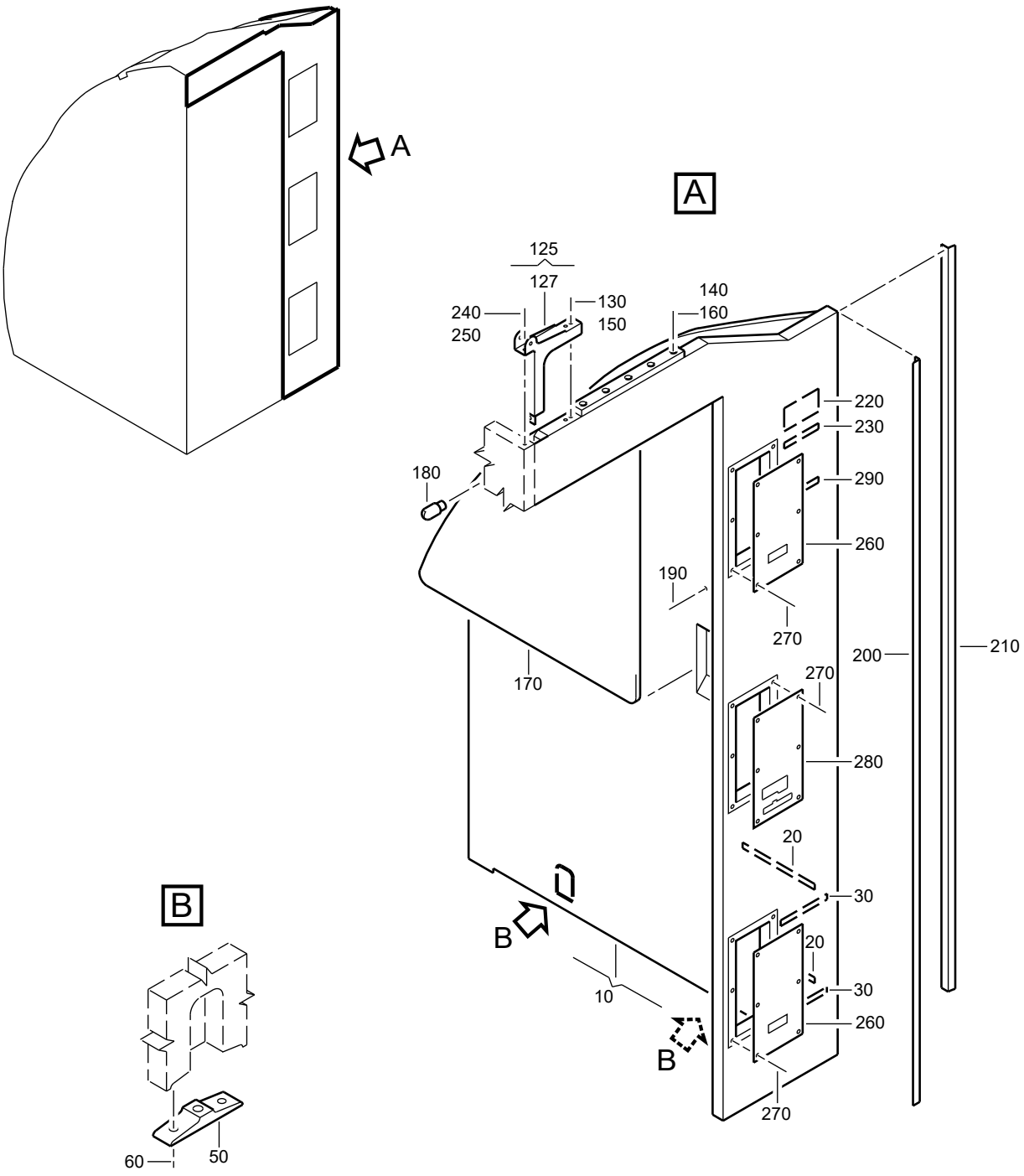

F_PL_254151_49_C_01_01

HOUSING
Figure 49C/EN254151SHEET49C01

FIG. ITEM	PART NUMBER	AIRLINE STOCK NUMBER	NOMENCLATURE 1234567		EFF CODE	UNITS PER ASSY
49C						
-001A	D2549020408066		. HOUSING used on 050J (25415142M) SEE 25-41-51-42M FOR NHA	NP		RF
-001B	D2549020401466		. HOUSING used on 050M (25415142K) SEE 25-41-51-42K FOR NHA	NP		RF
-001C	D2549020407666		. HOUSING used on 050A (25415142G) SEE 25-41-51-42G FOR NHA	NP		RF
-001D	D2549020603266		. HOUSING PRE VSB A2-254-25-032 used on 050A (25415101H) SEE 25-41-51-01H FOR NHA	NP		RF
-001E	D2549020706466		. HOUSING used on 050F (25415101L), 050L (254151410) SEE 25-41-51-01L FOR NHA SEE 25-41-51-410 FOR NHA	NP		RF
-001F	D2549010610066		. HOUSING PRE VSB A2-254-25-013 used on 050J (25415141P), 050L (25415141R) SEE 25-41-51-41P FOR NHA SEE 25-41-51-41R FOR NHA	NP		RF
-001G	D2549020410266		. HOUSING used on 050K (25415142M) SEE 25-41-51-42M FOR NHA	NP		RF
-001H	D2547161202866		. HOUSING POST SB 25-1674 used on 050M (25415141M), 050N (25415142N) SEE 25-41-51-41M FOR NHA SEE 25-41-51-42N FOR NHA	NP		RF

- ITEM NOT ILLUSTRATED

FIG. ITEM	PART NUMBER	AIRLINE STOCK NUMBER	NOMENCLATURE 1234567	EFF CODE	UNITS PER ASSY
-001J	D2549010610066		. HOUSING NP POST VSB A2-254-25-013 used on 050L (25415141P) SEE 25-41-51-41P FOR NHA		RF
-001K	D2549020603266		. HOUSING NP POST VSB A2-254-25-032 used on 050M (25415101H) SEE 25-41-51-01H FOR NHA		RF
010A	A225401305-650		. . HOUSING ASSY used on 001A		001
-010B	A225401305-658		. . HOUSING ASSY used on 001B		001
-010C	A225401305-622		. . HOUSING ASSY used on 001C		001
-010D	A2254013018722		. . HOUSING ASSY PRE VSB A2-254-25-032 POST SB 25-1314 used on 001D		001
-010E	A2254013028500		. . HOUSING ASSY POST SB 25-1314 used on 001E		001
-010F	A2254013038500		. . HOUSING ASSY POST SB 25-1314 used on 001F, 001J		001
-010G	A225401305-664		. . HOUSING ASSY used on 001G		001
-010H	A225401305-976		. . HOUSING ASSY POST SB 25-1674 used on 001H		001

- ITEM NOT ILLUSTRATED

FIG. ITEM	PART NUMBER	AIRLINE STOCK NUMBER	NOMENCLATURE 1234567	EFF CODE	UNITS PER ASSY
-010J	A2254013019722		. . HOUSING ASSY POST VSB A2-254-25-032 used on 001K		001
020A	0-112-0016-2000		. . . STRIP-SLIDING used on 010A, 010B, 010C, 010D, 010E, 010F, 010G, 010H, 010J		002
030A	0-112-0015-2000		. . . STRIP-SLIDING used on 010A, 010B, 010C, 010D, 010E, 010F, 010G, 010H, 010J		002
-035A	NAS1833C3-370		. . . INSERT used on 010A, 010B, 010C, 010D, 010E, 010F, 010G, 010H, 010J		005
-040A	NSA935405-01		. . . MOUNT USAGE RANGE FROM 035 TO 040 used on 010A, 010B, 010C, 010D, 010E, 010F, 010G, 010H, 010J		038
-043A	MS21059-08		. . . NUT used on 010A, 010B, 010C, 010D, 010E, 010F, 010G, 010H, 010J		016
-045A	DIN65399-2406G		. . . RIVET BUY PN DIN65399-2406GF used on 010A, 010B, 010C, 010D, 010E, 010F, 010G, 010H, 010J		032
050A	A225400232-208		. . . FITTING used on 010A, 010B, 010C, 010D, 010E, 010F, 010G, 010H, 010J		002

- ITEM NOT ILLUSTRATED

FIG. ITEM	PART NUMBER	AIRLINE STOCK NUMBER	NOMENCLATURE 1234567	EFF CODE	UNITS PER ASSY
060A	ABS0704-6-50		. . . SCREW used on 010A, 010B, 010C, 010D, 010E, 010F, 010G, 010H, 010J		004
-065A	NSA5054-04		. . . INSERT used on 010A, 010B, 010C, 010D, 010E, 010F, 010G, 010H, 010J		018
-070A	NAS1833C08-370		. . . INSERT USAGE RANGE FROM 094 TO 097 used on 010A, 010B, 010C, 010D, 010E, 010F, 010G, 010H, 010J		096
-080A	NAS1835C08		. . . INSERT USAGE RANGE FROM 018 TO 028 used on 010A, 010B, 010C, 010D, 010E, 010F, 010G, 010H, 010J		023
-085A	EF1840-06AM		. . . INSERT used on 010A, 010B, 010C, 010D, 010E, 010F, 010G, 010H, 010J		018
-090A	NSA5345-06C		. . . INSERT used on 010A, 010B, 010C, 010D, 010E, 010F, 010G, 010H, 010J		004
-100A	NSA5345-08C		. . . INSERT used on 010A, 010B, 010C, 010D, 010E, 010F, 010G, 010H, 010J		003

- ITEM NOT ILLUSTRATED

FIG. ITEM	PART NUMBER	AIRLINE STOCK NUMBER	NOMENCLATURE 1234567	EFF CODE	UNITS PER ASSY
-110A	EF1842-06C2		. . . INSERT used on 010A, 010B, 010C, 010D, 010E, 010F, 010G, 010H, 010J		004
-120A	NSA5054-08		. . . INSERT USAGE RANGE FROM 001 TO 004 used on 010A, 010B, 010C, 010D, 010E, 010F, 010G, 010H, 010J		003
125A	A225401239-004		. . . FITTING ASSY-UPR used on 010A, 010B, 010C, 010D, 010E, 010F, 010G, 010H, 010J		001
127A	A225401239-206		. . . . FITTING-UPR used on 125A		001
-128A	NSA5054-08		. . . . INSERT used on 125A		002
130A	NAS1801-08-5		. . . SCREW used on 010A, 010B, 010C, 010D, 010E, 010F, 010G, 010H, 010J		002
140A	NAS1801-3-8		. . . SCREW used on 010A, 010B, 010C, 010D, 010E, 010F, 010G, 010H, 010J		005
150A	NAS1149CN832R		. . . WASHER used on 010A, 010B, 010C, 010D, 010E, 010F, 010G, 010H, 010J		002

- ITEM NOT ILLUSTRATED

FIG. ITEM	PART NUMBER	AIRLINE STOCK NUMBER	NOMENCLATURE 1234567	EFF CODE	UNITS PER ASSY
160A	NAS1149C0332R		. . . WASHER used on 010A, 010B, 010C, 010D, 010E, 010F, 010G, 010H, 010J		005
170A	A2-254-0006-01		. . MIRROR-GLASS used on 001A, 001B, 001C, 001D, 001E, 001F, 001G, 001H, 001J, 001K		001
180A	A225400451-200		. . STUD used on 001A, 001B, 001C, 001D, 001E, 001F, 001G, 001H, 001J, 001K		001
190A	NAS1100-08-4		. . SCREW used on 001A, 001B, 001C, 001D, 001E, 001F, 001G, 001H, 001J, 001K		003
200A	A225400224-212		. . SECTION used on 001A, 001B, 001C, 001D, 001E, 001F, 001G, 001H, 001J, 001K		001
210A	ABS0307A2-11		. . SECTION-SEALING USE AS REQUIRED REQUIRED LENGTH 1965MM BUY PN ABS0307AB2-11 used on 001A, 001B, 001C, 001D, 001E, 001F, 001G, 001H, 001J, 001K		AR
220A	A225400500-200		. . PLACARD used on 001A, 001B, 001C, 001D, 001E, 001F, 001G, 001H, 001J, 001K		001

- ITEM NOT ILLUSTRATED

FIG. ITEM	PART NUMBER	AIRLINE STOCK NUMBER	NOMENCLATURE 1234567	EFF CODE	UNITS PER ASSY
230A	A225400500-202		. . PLACARD used on 001A, 001B, 001C, 001D, 001E, 001F, 001G, 001H, 001J, 001K		001
240A	NAS1096-3-10		. . SCREW BUY PN NAS1801-3-10 used on 001A, 001B, 001C, 001D, 001E, 001F, 001G, 001H, 001J, 001K		001
250A	NAS1149C0332R		. . WASHER used on 001A, 001B, 001C, 001D, 001E, 001F, 001G, 001H, 001J, 001K		001
260A	D2528641100600		. . COVER-DECOR POST SB 25-1287 used on 001A, 001B, 001C, 001D, 001E, 001F, 001G, 001H, 001J, 001K		002
270A	NAS1102-04-6		. . SCREW POST SB 25-1287 used on 001A, 001B, 001C, 001D, 001E, 001F, 001G, 001H, 001J, 001K		018
280A	D2528641102200		. . COVER-DECOR POST SB 25-1473 used on 001A, 001B, 001C, 001D, 001E, 001F, 001G, 001J, 001K		001
280B	D2528641102000		. . COVER-DECOR used on 001H		001
290A	A225400500-204		. . PLACARD POST SB 25-1674 used on 001H		001

- ITEM NOT ILLUSTRATED

FIG. ITEM	PART NUMBER	AIRLINE STOCK NUMBER	NOMENCLATURE 1234567	EFF CODE	UNITS PER ASSY
-300A	NAS1833C08-370		. . INSERT POST SB 25-1674 used on 001H		022
-310A	NAS1835C08		. . INSERT POST SB 25-1674 used on 001H		008
-320A	A825400501-210		. . LABEL POST VSB A2-254-25-013 used on 001J		008
-330A	A825400501-212		. . FILM-PROTECTIVE POST VSB A2-254-25-013 used on 001J		001

- ITEM NOT ILLUSTRATED